PARSONS

Direct: +1 512.719.6005 / Office: +1 512.719.6000
9101 Burnet Road, Suite 210, Austin, Texas 78758

February 5, 2024

Lillian Butler
Section Manager | Edwards Acquired Protection Program
Texas Commission on Environmental Quality
12100 Park 35 Circle
Austin, TX 78753

Subject: 183 North Mobility – 183N Phase 2 Mod WPAP Administrative Review

Dear Ms. Butler,

This request for modification of the previously approved 183N Phase 2 Edwards Aquifer Protection Program Roadway (EAPP) Application is submitted by Great Hills Constructors for TCEQ approval to authorize discharges over the Edwards Aquifer recharge zone from the 183 North Mobility Project (Project) during and after construction.

Great Hills Constructors (GHC), a joint venture of Archer Western Construction and Sundt Construction, is the Design-Build Contractor for the Project. Parsons Corporation is GHC's lead design sub-contractor for the Project. The Central Texas Regional Mobility Authority (MA) is developing the 183 North Mobility Project which is situated within TxDOT's right-of-way. GHC is delivering the Project under a Design-Build Agreement (DBA) with the MA.

This application, hereafter referred to as 183N Phase 2 Mod, involves modification of the previously approved 183N Phase 2 plan to allow implementation of subsurface Contech Jellyfish® Filter systems as permanent BMPs instead of surface batch detention ponds for treatment of runoff associated with subbasins 1A, 1B, 1C, 2A, 2B, 2C and 2D2 within the Lake Creek Watershed. Pond 2D1 will remain a surface batch detention pond with stacked detention as previously approved in the 183N Phase 2 application. The existing underground sedimentation/filtration ponds associated with the subbasins mentioned above will be abandoned in place and filled with sand or flowable backfill and their inlets/outlets will be plugged. Acreage has not been added or removed from the approved plan nor has the acreage of impervious cover or % impervious cover changed. All other BMPs previously approved in the 183N Phase 2 application will remain unchanged.

The following documents have been uploaded to https://ftps.tceq.texas.gov/ [ftps.tceq.texas.gov] for administrative review:

1. Edwards Aquifer Protection Program Roadway Application for 183N Phase 2 Mod including associated forms and attachments
    - File 1 - EAPP Rdwy App 183N Phase 2 Mod
2. Attachment G – Construction Plans are provided as a separate attachment
    - File 2 - SW3P_Water Quality Ponds_Drainage;
    - File 3 - Water Quality Design Report Lake Creek Watershed;
3. Great Hills Constructors JV Agreement between Archer Western Construction LLC and Sundt Construction Inc. (redacted)
4. 183 North Mobility Project Design Build Agreement

If you have any questions related to this application, please contact me directly at 512-470-9703 or by email at mark.frye@parsons.com.

Sincerely,



Mark Frye, PE

183 North Mobility Project

Edwards Aquifer Water Pollution Abatement Plan (WPAP)

183N Phase 2 Modification

For:

Central Texas Regional Mobility Authority

a regional mobility authority operating pursuant to Texas Transportation Code Chapter 370

3300 N. IH-35 Suite 300

Austin, TX 78705

Client Project # 20183N22701C

Submitted By:

Great Hills Constructors

a joint venture between Archer Western Construction, LLC and

Sundt Construction, Inc.

9430 Research Blvd

Building 4, Suite 400

Austin, TX 78759

Revision Table

Revision	Date	Description of Changes
0	5/20/2022	183N Phase 2 Edwards Aquifer WPAP
1	1/22/2024	Utilize Contech Jellyfish BMPs instead of batch detention for subbasins 1A, 1B, 1C, 2A, 2B, 2C and 2D2 within the Lake Creek Watershed

Table of Contents

Revision Table i

EDWARDS AQUIFER APPLICATION COVER PAGE (TCEQ-20705) 5

MODIFICATION OF A PREVIOUSLY APPROVED PLAN (TCEQ-0590) 6

ATTACHMENT A – ORIGINAL APPROVAL LETTER AND APPROVED MODIFICATION LETTERS 7

ATTACHMENT B – NARRATIVE OF PROPOSED MODIFICATION 8

1.1 DESCRIPTION OF PROPOSED MODIFICAITON 8

ATTACHMENT C – CURRENT SITE PLAN OF THE APPROVED PROJECT 9

EDWARDS AQUIFER PROTECTION PROGRAM ROADWAY APPLICATION (TCEQ-20872) 10

ATTACHMENT A – ROAD MAP 11

ATTACHMENT B - USGS QUADRANGLE 12

ATTACHMENT C – PROJECT DESCRIPTION 13

1.1 GENERAL PROJECT INFORMATION 13

1.2 GENERAL PROJECT DESCRIPTION 14

1.3 COMPLETE SITE AREA 18

1.4 OFFSITE UPGRADIENT STORMWATER AREAS TO BE CAPTURED 19

1.5 IMPERVIOUS AREA 19

1.6 PERMANENT BMPS 19

1.7 PROPOSED SITE USE 20

1.8 EXISTING ROADWAY 20

1.9 STRUCTURES TO BE DEMOLISHED 20

1.10 MAJOR INTERIM PHASES 20

ATTACHMENT D – FACTORS AFFECTING SURFACE WATER QUALITY 22

1.1 GENERAL 22

1.2 183N PHASE 2 CONSTRUCTION ACTIVITIES 22

1.3 FACTORS AFFECTING SURFACE WATER QUALITY 22

183N PHASE 2 MOD SITE PLAN 24

1.1 GENERAL 24

PERMANENT BEST MANAGEMENT PRACTICES (BMPs) 25

ATTACHMENT E – BMPS FOR UPGRADIENT(OFFSITE) STORMWATER 29

1.2 OFFSITE STORMWATER 29

ATTACHMENT F – BMPs FOR ON-SITE STORMWATER 30

1.3 ON-SITE STORMWATER 30

ATTACHMENT G – CONSTRUCTION PLANS 32

ATTACHMENT H – INSPECTION, MAINTENANCE, REPAIR AND RETROFIT PLAN 34

1.1 GENERAL 34

1.2 MAINTENANCE OPERATIONS 34

1.3 EXISTING AND PROPOSED PERMANENT BMPS 35

1.4 MAINTENANCE OF EXISTING SEDIMENTATION/FILTRATION PONDS 36

1.5 MAINTENANCE OF WET BASINS 37

1.6 MAINTENANCE OF BATCH DETENTION PONDS 38

1.7 MAINTENANCE OF Jellyfish® filters 40

1.8 SIGNATURE OF RESPONSIBLE PARTY 43

ATTACHMENT I – NOT USED 44

ATTACHMENT J – MEASURES FOR MINIMIZING SURFACE STREAM CONTAMINATION 45

1.1 GENERAL 45

1.2 MEASURES FOR OUTSIDE WIDENING 45

1.3 MEASURES FOr CONSTRUCTION OF RECONFIGURED BMPS AND NEW BMPS 45

1.4 MEASURES FOR TEMPORARY PAVEMENT 45

1.5 STREAM FLASHING AND STRONGER FLOWS, AND IN-STREAM EFFECTS 46

ATTACHMENT K – VOLUME AND CHARACTER OF STORMWATER 47

1.1 GENERAL 47

1.2 PRE-CONSTRUCTION RUNOFF COEFFICIENT 47

1.3 POST CONSTRUCTION RUNOFF COEFFICIENT 48

1.4 183N PHASE 2 / 183n phase 2 mod RUNOFF COEFFICIENT 49

GEOLOGIC ASSESSMENT FORM (TCEQ-0585) 50

1.1 OVERVIEW 50

TEMPORARY STORMWATER SECTION (TCEQ-0602) 51

ATTACHMENT A – SPILL RESPONSE ACTION 52

1.1 OVERVIEW 52
1.2 RESPONSES TO NON-EMERGENCY RELEASE 52
1.3 EMERGENCY RESPONSES TO RELEASES 53
1.3.1 INITIAL PROCEDURES 53
1.3.2 REPORTING 54
ATTACHMENT B – POTENTIAL SOURCES OF CONTAMINATION 56
1.1 STORMWATER CONTAMINATES 56
1.2 INCREASED SEDIMENT LOADING 56
ATTACHMENT C – SEQUENCE OF MAJOR ACTIVITIES 57
1.1 GENERAL 57
1.2 183N PHASE 2 SEQUENCE OF MAJOR ACTIVITIES 57
ATTACHMENT D – TEMPORARY BEST MANAGEMENT PRACTICES 60
1.1 GENERAL 60
1.2 TEMPORARY EROSION CONTROL BMPS 60
1.3 TEMPORARY SEDIMENT CONTROL BMPS 60
1.4 NON-STRUCTURAL BMPS 60
1.5 BMPS AND MEASURES FOR FLOW ORIGINATING UPGRADIENT FROM SITE 60
1.6 BMPS AND MEASURES FOR FLOWS ORIGINATING ON-SITE 61
1.7 183N PHASE 2 Mod TEMPORARY BMPS 61
ATTACHMENT E – NOT USED 62
ATTACHMENT F – STRUCTURAL PRACTICES 63
1.8 GENERAL 63
1.9 183N PHASE 2 MoD STRUCTURAL PRACTICES 63
ATTACHMENT G – DRAINAGE AREA MAP 65
1.1 GENERAL 65
ATTACHMENT H – TEMPORARY SEDIMENT POND(S) PLANS & CALCULATIONS 66
1.1 GENERAL 66
ATTACHMENT I – INSPECTION AND MAINTENANCE FOR BMPs 67
1.1 MONITORING AND DOCUMENTATION 67
1.2 INSPECTION AND MAINTENANCE OF TEMPORARY BMPS 67

1.3 INSPECTION AND MAINTENANCE OF PERMANENT BMPS 67

ATTACHMENT J – SCHEDULE OF INTERIM AND PERMANENT SOIL STABILIZATION PRACTICES 69

1.1 GENERAL 69

1.2 INTERIM SOIL STABILIZATION PRACTICES 69

1.3 PERMANENT SOIL STABILIZATION PRACTICES 69

AGENT AUTHORIZATION FORM (TCEQ-0599) 70

APPLICATION FEE FORM (TCEQ-0574) 71

CORE DATA FORM (TCEQ-10400) 72

EDWARDS AQUIFER APPLICATION COVER PAGE (TCEQ-20705)

Texas Commission on Environmental Quality

Edwards Aquifer Application Cover Page

Our Review of Your Application

The Edwards Aquifer Program staff conducts an administrative and technical review of all applications. The turnaround time for administrative review can be up to 30 days as outlined in 30 TAC 213.4(e). Generally administrative completeness is determined during the intake meeting or within a few days of receipt. The turnaround time for technical review of an administratively complete Edwards Aquifer application is 90 days as outlined in 30 TAC 213.4(e). Please know that the review and approval time is directly impacted by the quality and completeness of the initial application that is received. In order to conduct a timely review, it is imperative that the information provided in an Edwards Aquifer application include final plans, be accurate, complete, and in compliance with 30 TAC 213.

Administrative Review

1. Edwards Aquifer applications must be deemed administratively complete before a technical review can begin. To be considered administratively complete, the application must contain completed forms and attachments, provide the requested information, and meet all the site plan requirements. The submitted application and plan sheets should be final plans. Please submit one full-size set of plan sheets with the original application, and half-size sets with the additional copies.

   To ensure that all applicable documents are included in the application, the program has developed tools to guide you and web pages to provide all forms, checklists, and guidance. Please visit the below website for assistance: http://www.tceq.texas.gov/field/eapp.

2. This Edwards Aquifer Application Cover Page form (certified by the applicant or agent) must be included in the application and brought to the administrative review meeting.

3. Administrative reviews are scheduled with program staff who will conduct the review. Applicants or their authorized agent should call the appropriate regional office, according to the county in which the project is located, to schedule a review. The average meeting time is one hour.

4. In the meeting, the application is examined for administrative completeness. Deficiencies will be noted by staff and emailed or faxed to the applicant and authorized agent at the end of the meeting, or shortly after. Administrative deficiencies will cause the application to be deemed incomplete and returned.

   An appointment should be made to resubmit the application. The application is re-examined to ensure all deficiencies are resolved. The application will only be deemed administratively complete when all administrative deficiencies are addressed.

5. If an application is received by mail, courier service, or otherwise submitted without a review meeting, the administrative review will be conducted within 30 days. The applicant and agent will be contacted with the results of the administrative review. If the application is found to be administratively incomplete, it can be retrieved from the regional office or returned by regular mail. If returned by mail, the regional office may require arrangements for return shipping.

6. If the geologic assessment was completed before October 1, 2004 and the site contains “possibly sensitive” features, the assessment must be updated in accordance with the *Instructions to Geologists* (TCEQ-0585 Instructions).

Technical Review

1. When an application is deemed administratively complete, the technical review period begins. The regional office will distribute copies of the application to the identified affected city, county, and groundwater conservation district whose jurisdiction includes the subject site. These entities and the public have 30 days to provide comments on the application to the regional office. All comments received are reviewed by TCEQ.

2. A site assessment is usually conducted as part of the technical review, to evaluate the geologic assessment and observe existing site conditions. The site must be accessible to our staff. The site boundaries should be

clearly marked, features identified in the geologic assessment should be flagged, roadways marked and the alignment of the Sewage Collection System and manholes should be staked at the time the application is submitted. If the site is not marked the application may be returned.

3. We evaluate the application for technical completeness and contact the applicant and agent via Notice of Deficiency (NOD) to request additional information and identify technical deficiencies. There are two deficiency response periods available to the applicant. There are 14 days to resolve deficiencies noted in the first NOD. If a second NOD is issued, there is an additional 14 days to resolve deficiencies. If the response to the second notice is not received, is incomplete or inadequate, or provides new information that is incomplete or inadequate, the application must be withdrawn or will be denied. Please note that because the technical review is underway, whether the application is withdrawn or denied **the application fee will be forfeited**.

4. The program has 90 calendar days to complete the technical review of the application. If the application is technically adequate, such that it complies with the Edwards Aquifer rules, and is protective of the Edwards Aquifer during and after construction, an approval letter will be issued. Construction or other regulated activity may not begin until an approval is issued.

Mid-Review Modifications

It is important to have final site plans prior to beginning the permitting process with TCEQ to avoid delays.

Occasionally, circumstances arise where you may have significant design and/or site plan changes after your Edwards Aquifer application has been deemed administratively complete by TCEQ. This is considered a "Mid-Review Modification". Mid-Review Modifications may require redistribution of an application that includes the proposed modifications for public comment.

If you are proposing a Mid-Review Modification, two options are available:

- If the technical review has begun your application can be denied/withdrawn, your fees will be forfeited, and the plan will have to be resubmitted.
- TCEQ can continue the technical review of the application as it was submitted, and a modification application can be submitted at a later time.

If the application is denied/withdrawn, the resubmitted application will be subject to the administrative and technical review processes and will be treated as a new application. The application will be redistributed to the affected jurisdictions.

Please contact the regional office if you have questions. If your project is located in Williamson, Travis, or Hays County, contact TCEQ's Austin Regional Office at 512-339-2929. If your project is in Comal, Bexar, Medina, Uvalde, or Kinney County, contact TCEQ's San Antonio Regional Office at 210-490-3096

Please fill out all required fields below and submit with your application.

1. Regulated Entity Name: 183 North Mobility Project						**2. Regulated Entity No.:RN102756418**			
3. Customer Name: Great Hills Constructors						**4. Customer No.: CN605967322**			
5. Project Type: **(Please circle/check one)**	New		Modification			Extension		Exception	
6. Plan Type: **(Please circle/check one)**	WPAP	CZP	SCS	UST	AST	EXP	EXT	Technical Clarification	Optional Enhanced Measures
7. Land Use: **(Please circle/check one)**	Residential		Non-residential			**8. Site (acres):**			627.8
9. Application Fee:	$10,000		**10. Permanent BMP(s):**					Sedimentation-Filtration, Wet, & Batch Detention ponds, Jellyfish Filter	
11. SCS (Linear Ft.):			**12. AST/UST (No. Tanks):**						
13. County:	Williamson & Travis		**14. Watershed:**					Lake Creek, Walnut Creek, Bull Creek, Rattan Creek, Shoal Creek	

Application Distribution

Instructions: Use the table below to determine the number of applications required. One original and one copy of the application, plus additional copies (as needed) for each affected incorporated city, county, and groundwater conservation district are required. Linear projects or large projects, which cross into multiple jurisdictions, can require additional copies. Refer to the "Texas Groundwater Conservation Districts within the EAPP Boundaries" map found at:

http://www.tceq.texas.gov/assets/public/compliance/field_ops/eapp/EAPP%20GWCD%20map.pdf

For more detailed boundaries, please contact the conservation district directly.

Austin Region			
County:	**Hays**	**Travis**	**Williamson**
Original (1 req.)	__	__	__
Region (1 req.)	__	__	__
County(ies)	__	__	__
Groundwater Conservation District(s)	__Edwards Aquifer Authority __Barton Springs/ Edwards Aquifer __Hays Trinity __Plum Creek	__Barton Springs/ Edwards Aquifer	NA
City(ies) Jurisdiction	__Austin __Buda __Dripping Springs __Kyle __Mountain City __San Marcos __Wimberley __Woodcreek	X Austin __Bee Cave __Pflugerville __Rollingwood __Round Rock __Sunset Valley __West Lake Hills	X Austin __Cedar Park __Florence __Georgetown __Jerrell __Leander __Liberty Hill __Pflugerville __Round Rock

San Antonio Region					
County:	**Bexar**	**Comal**	**Kinney**	**Medina**	**Uvalde**
Original (1 req.)	__	__	__	__	__
Region (1 req.)	__	__	__	__	__
County(ies)	__	__	__	__	__
Groundwater Conservation District(s)	__ Edwards Aquifer Authority __Trinity-Glen Rose	__Edwards Aquifer Authority	__Kinney	__EAA __Medina	__EAA __Uvalde
City(ies) Jurisdiction	__Castle Hills __Fair Oaks Ranch __Helotes __Hill Country Village __Hollywood Park __San Antonio (SAWS) __Shavano Park	__Bulverde __Fair Oaks Ranch __Garden Ridge __New Braunfels __Schertz	NA	__San Antonio ETJ (SAWS)	NA

I certify that to the best of my knowledge, that the application is complete and accurate. This application is hereby submitted to TCEQ for administrative review and technical review. Great Hills Constructors
Print Name of Customer/Authorized Agent Mark Frye, PE January 29, 2024
Signature of Customer/Authorized Agent Date

FOR TCEQ INTERNAL USE ONLY				
Date(s)Reviewed:		Date Administratively Complete:		
Received From:		Correct Number of Copies:		
Received By:		Distribution Date:		
EAPP File Number:		Complex:		
Admin. Review(s) (No.):		No. AR Rounds:		
Delinquent Fees (Y/N):		Review Time Spent:		
Lat./Long. Verified:		SOS Customer Verification:		
Agent Authorization Complete/Notarized (Y/N):		Fee Check:	Payable to TCEQ (Y/N):	
Core Data Form Complete (Y/N):			Signed (Y/N):	
Core Data Form Incomplete Nos.:			Less than 90 days old (Y/N):	

MODIFICATION OF A PREVIOUSLY APPROVED PLAN (TCEQ-0590)

Modification of a Previously Approved Plan

Texas Commission on Environmental Quality

for Regulated Activities on the Edwards Aquifer Recharge Zone and Transition Zone and Relating to 30 TAC 213.4(j), Effective June 1, 1999

To ensure that the application is administratively complete, confirm that all fields in the form are complete, verify that all requested information is provided, consistently reference the same site and contact person in all forms in the application, and ensure forms are signed by the appropriate party.

Note: Including all the information requested in the form and attachments contributes to more streamlined technical reviews.

Signature

To the best of my knowledge, the responses to this form accurately reflect all information requested concerning the proposed regulated activities and methods to protect the Edwards Aquifer. This request for a **Modification of a Previously Approved Plan** is hereby submitted for TCEQ review and executive director approval. The request was prepared by:

Print Name of Customer/Agent: Great Hills Constructors

Date: January 29, 2024

Signature of Customer/Agent:

Mark Frye , PE

Project Information

1. Current Regulated Entity Name: 183 North Mobility Project
   Original Regulated Entity Name: 183 North Mobility Project
   Regulated Entity Number(s) (RN): RN102756418
   Edwards Aquifer Protection Program ID Number(s): 11003141
   ☒ The applicant has not changed and the Customer Number (CN) is: CN605967322
   ☐ The applicant or Regulated Entity has changed. A new Core Data Form has been provided.

2. ☒ **Attachment A: Original Approval Letter and Approved Modification Letters**. A copy of the original approval letter and copies of any modification approval letters are attached.

3. A modification of a previously approved plan is requested for (check all that apply):
   - ☒ Physical or operational modification of any water pollution abatement structure(s) including but not limited to ponds, dams, berms, sewage treatment plants, and diversionary structures;
   - ☐ Change in the nature or character of the regulated activity from that which was originally approved or a change which would significantly impact the ability of the plan to prevent pollution of the Edwards Aquifer;
   - ☐ Development of land previously identified as undeveloped in the original water pollution abatement plan;
   - ☐ Physical modification of the approved organized sewage collection system;
   - ☐ Physical modification of the approved underground storage tank system;
   - ☐ Physical modification of the approved aboveground storage tank system.

4. ☒ Summary of Proposed Modifications (select plan type being modified). If the approved plan has been modified more than once, copy the appropriate table below, as necessary, and complete the information for each additional modification.

WPAP Modification Summary	***Approved Project***	***Proposed Modification***
Acres	445.0	N/A
Type of Development	Roadway	N/A
Number of Residential Lots	N/A	N/A
Impervious Cover (acres)	385.37	N/A
Impervious Cover (%	86.6	N/A
Permanent BMPs	14 batch detention, 1 wet	7 batch, 7 jellyfish, 1 wet
Other	N/A	N/A

SCS Modification Summary	***Approved Project***	***Proposed Modification***
Linear Feet	N/A	N/A
Pipe Diameter	N/A	N/A
Other	N/A	N/A

AST Modification Summary	*Approved Project*	*Proposed Modification*
Number of ASTs	N/A	N/A
Volume of ASTs	N/A	N/A
Other	N/A	N/A

UST Modification Summary	*Approved Project*	*Proposed Modification*
Number of USTs	N/A	N/A
Volume of USTs	N/A	N/A
Other	N/A	N/A

5. ☒ **Attachment B: Narrative of Proposed Modification**. A detailed narrative description of the nature of the proposed modification is attached. It discusses what was approved, including any previous modifications, and how this proposed modification will change the approved plan.

6. ☒ **Attachment C: Current Site Plan of the Approved Project**. A current site plan showing the existing site development (i.e., current site layout) at the time this application for modification is attached. A site plan detailing the changes proposed in the submitted modification is required elsewhere.
   - ☐ The approved construction has not commenced. The original approval letter and any subsequent modification approval letters are included as Attachment A to document that the approval has not expired.
   - ☐ The approved construction has commenced and has been completed. Attachment C illustrates that the site was constructed as approved.
   - ☐ The approved construction has commenced and has been completed. Attachment C illustrates that the site was **not** constructed as approved.
   - ☒ The approved construction has commenced and has **not** been completed. Attachment C illustrates that, thus far, the site was constructed as approved.
   - ☐ The approved construction has commenced and has **not** been completed. Attachment C illustrates that, thus far, the site was **not** constructed as approved.

7. ☐ The acreage of the approved plan has increased. A Geologic Assessment has been provided for the new acreage.
   ☒ Acreage has not been added to or removed from the approved plan.

8. ☒ Submit one (1) original and one (1) copy of the application, plus additional copies as needed for each affected incorporated city, groundwater conservation district, and county in which the project will be located. The TCEQ will distribute the additional copies to these jurisdictions. The copies must be submitted to the appropriate regional office.

ATTACHMENT A – ORIGINAL APPROVAL LETTER AND APPROVED MODIFICATION LETTERS

Jon Niermann, *Chairman*
Emily Lindley, *Commissioner*
Bobby Janecka, *Commissioner*
Toby Baker, *Executive Director*

TEXAS COMMISSION ON ENVIRONMENTAL QUALITY

Protecting Texas by Reducing and Preventing Pollution

September 30, 2022

Mr. Pat Pluenneke
Great Hills Constructors
9430 Research Boulevard, Bldg. 4, Suite 400
Austin, Texas 78759

Re: Edwards Aquifer, Travis and Williamson Counties
US 183 North Mobility, Phase 2; Austin, Texas
Request for Approval of a Modification to a Water Pollution Abatement Plan (WPAP-MOD)
30 Texas Administrative Code (TAC) Chapter 213
Edwards Aquifer Protection Program ID No. 11003141, RN102756418

Dear Mr. Pluenneke:

The Texas Commission on Environmental Quality (TCEQ) has completed its review of the WPAP-MOD application for the referenced project submitted to the Austin Regional Office by Parsons Corporation on behalf of Great Hills Constructors (GHC) on June 20, 2022. Final review of the WPAP-MOD submittal was completed after additional material was received on September 7, 2022. As presented to the TCEQ, the Temporary and Permanent Best Management Practices (BMPs) and construction plans were prepared by a Texas licensed professional engineer to be in general compliance with the requirements of 30 TAC Chapter 213. These planning materials were sealed, signed, and dated by a Texas licensed professional engineer. Therefore, based on the engineer's concurrence of compliance, the planning materials for construction of the proposed project and pollution abatement measures are hereby approved subject to applicable state rules and the conditions in this letter. The applicant or a person affected may file with the chief clerk a motion for reconsideration of the executive director's final action on this WPAP. A motion for reconsideration must be filed no later than 23 days after the date of this approval letter. *This approval expires two (2) years from the date of this letter unless, prior to the expiration date, more than 10% of the construction has commenced on the project or an extension of time has been requested.*

BACKGROUND

Texas Department of Transportation (TxDOT) improved historic US 183 in this corridor from 1990 thru 2020 with a series of construction and drainage projects. A majority of current drainage infrastructure and travel lanes expansion occurred in the following approvals:

EAPP ID 11-98120101 "US 183 Mainlanes (and) Frontage Drainage Improvements",
EAPP ID 11-93051901 "US 183 Angus Road to Williamson (County) Line",
EAPP ID 11-91031903 "US 183 Improvements Balcones Trail West to Loop 360".

Additional travel lane expansion and drainage improvements occurred in:
EAPP ID 11-03072101 "US 183 Section 9".

Due to the overlapping drainage areas of prior authorizations, a reset of impervious cover (IC) and TSS removal calculations to a baseline year per watershed basin is being utilized; therefore, previous approvals for road improvements and for clearing and grading will hereby be affected as stated:

A. EAPP ID 11-98120101 "US 183 Mainlanes (and) Frontage Drainage Improvements"
   Vaults and basins to be retrofitted to meet current standards and for improved maintenance. Original basin design to be modified at Woods Pond.
   Action superseded.
B. EAPP ID 11-91031903 "US 183 Improvements Balcones Trail West to Loop 360"
   Original basin designed to be retrofitted to meet current standards and for improved maintenance.
   Action superseded.
C. EAPP ID 11-94040701 "US 183 McNeil Spicewood Hunter"
   Pavement removed, site reconfiguration, and IC changes.
   Action superseded.
D. EAPP ID 11-92112502 "US 183 Location A&B"
   Pavement removed, site reconfiguration, and IC changes.
   Action superseded.
E. EAPP ID 11-93051901 "US 183 Angus Road to Williamson (County) Line"
   Original basin designed to be retrofitted to meet current standards and for improved maintenance.
   Action superseded.

The following approval will remain active and has majority overlaps with the current US 183 North Mobility site:

EAPP ID 11-03072101 "US 183 Section 9"
The basin design is unaffected. Includes drainage from other projects.
Action remains.

In addition, prior phases are superseded by this final design, considered to be integrated into Phase 2:

EAPP ID 11002872 "US 183 North Mobility Phase 1-1"
EAPP ID 11003016 "US 183 North Mobility Phase 1-2"

PROJECT DESCRIPTION

The proposed roadway is the completed final phasing for the multi-phase expansion of US 183 North from north of Lakeline Mall Drive southward to the boundary of the Recharge Zone near Loop 1 (MoPac North). The roadway design consists of expanding existing US 183 North to a six-lane expressway in each direction by adding two general purpose lanes and four express lanes. Culverts and storm systems will be extended under US 183 North. Additional sidewalks and shared-use paths will be added. Retrofitting a majority of BMPs which exist on the corridor will also be included.

The roadway project is within a right-of-way (ROW) corridor of 445.0 acres within the Recharge Zone (RZ) and Transition Zone (TZ). The increase to impervious cover is 167.4 acres.

Previous construction activities approved in EAPP ID 11003016 "US 183 North Mobility Phase1-2" involves demolition and excavation, reconfiguring the existing drainage system within the median access ramps, stabilizing temporary median access ramps with pavement, drilling shaft foundations, and placing concrete for foundations, bridge bent columns, and caps, and removal and reconstruction of existing driveways.

The proposed roadway construction will conduct activities and add elements as listed here in the corridor:

- Widening of US 183 general purpose lanes including embankment and retaining wall
- Expanding storm sewer and inlet structures for outside widening of US 183
- Paving operations for all permanent pavement
- Installing bridge decks for widening of existing bridges
    - Bridge 1 (Lakeline Mall Dr overpass)
    - Bridge 2 (RM 620 overpass)
    - Bridge 3 (Pecan Park Blvd overpass)
    - Bridge 4 (Lake Creek Pkwy overpass)
    - Bridge 5 (Anderson Mill Rd overpass)
    - Bridge 6 (Spicewood Springs Rd/McNeil Rd overpass)
    - Bridge 7 (Oak Knoll Dr overpass)
    - Bridge 8 (Duval Rd overpass)
    - Bridge 9 (Balcones Woods Dr overpass)
    - Bridge 10 (Braker Ln overpass)
    - Bridge 11 (Great Hills Trl overpass)
    - Bridge 12 within RZ (new US 183 express lanes direct connector)
- Adding temporary pavement necessary to facilitate traffic control
- Reconfiguring and expanding existing permanent BMPs
- Constructing new permanent BMPs
- Drilling shaft foundations for sign, DMS, and toll gantry structures

In addition to the described activities, temporary erosion and sedimentation controls will be installed prior to commencing site disturbance and maintained during construction. No wastewater will be generated by this roadway project.

PERMANENT POLLUTION ABATEMENT MEASURES

To prevent pollution of stormwater runoff originating on-site or up-gradient of the site and potentially flowing across and off the site after construction, 15 surface batch detention (BD) basins will be constructed, three with stacked detention volumes, using the TCEQ technical guidance document *Complying with the Edwards Aquifer Rules: Technical Guidance on Best Management Practices (2005)*, to treat stormwater runoff. Most of the existing BMPs are in place and are to be retrofitted to the new design to treat additional stormwater. 620 Median Pond was modified previously and will not be retrofitted. Pond E (Rattan Creek), Pond 360 (Bull Creek), and Ponds H & H2 (Shoal Creek) are new construction.

Woods Pond is an existing wet basin which will be modified. Design plans are to be provided to allow a variance on design criteria for a lowered bottom slope elevation (0.5 percent). The design variance was reviewed and is approved.

BMP SUMMARY TABLE:

BMP ID	Number and BMP Type	Watershed/Basin ID/Segment	TSS treated (lbs.)	Location	Status
West Cow Path Pond	1 Stacked Batch Detention	Walnut Creek / F /1B	39200	W. Cow Path	Retrofit
Lake Creek 1A, 1B, & 1C	3 Surface Batch Detention	Lake Creek / A / 1A	13620	Near RM 620	Retrofit
Hymeadow 2A, 2B, 2C, 2D1 & 2D2	5 Surface Batch Detention	Lake Creek / B / 1A	9970	Near Lake Creek Pkwy	Retrofit
Pond Springs Pond	1 Stacked Batch Detention	Lake Creek / C / 1A	12900	Pond Springs Rd	Retrofit
Woods Pond	1 Wet Basin	Lake Creek / D / 1A	15900	Pond Springs Rd	Modify
Seton Pond	1 Stacked Batch Detention	Walnut Creek / G / 1C	24100	Seton Center Pkwy	Retrofit
Pond 360	1 Surface Batch Detention	Bull Creek / H / 1C	360	N. Capital of Texas Hwy	New
Pond H & H2	2 Surface Batch Detention	Shoal Creek / H / 1C	9700	Near Loop 1	New
Pond E (Rattan)	1 Surface Batch Detention	Rattan Creek / E / 1B	6000	McNeil Dr	New
620 Median Pond	1 Partial Sand Filter System with Hazardous Materials Trap	Lake Creek / A / 1A	27966	US 183N & RM 620	Existing

The approved measures meet the required 80 percent removal of the increased load in TSS caused by the project. Treatment design calculations were sealed by Colin Blankenship, P.E., on September 6, 2022, to demonstrate the total treatment load removal exceeds the required additional total suspended solids (TSS) loading.

Central Texas Regional Mobility Authority (CTRMA) is expected to maintain the facilities upon completion of construction.

GEOLOGY

According to the Geologic Assessment (GA) conducted in September 2015, the site contains the Edwards Formation (K_{ed}), and outcrops are obscured by vegetative cover and existing pavement and has been previously disturbed. To the East, the project enters the Balcones Fault Zone (BFZ) where inferred faults are noted. No sensitive geologic features were identified. The Austin Regional Office site assessment conducted August 12, 2022, confirmed the site to be generally as described in the application.

SPECIAL CONDITIONS

I. Since this is a roadway construction project, deed recordation of this approval letter is not required.

II. All construction activities, including staging, stockpiling, parking lots, and traffic shall be conducted inside the established ROW, and outside the 100-year floodplain, except in the case where proper BMPs are being installed or maintained, and approved prior to its installation.

III. Within 90 days of this letter upon modified design of the Woods Pond WB, GHC shall provide the sealed engineered documents which provide layouts and TSS calculation updates.

STANDARD CONDITIONS

1. Pursuant to Chapter 7 Subchapter C of the Texas Water Code, any violations of the requirements in 30 TAC Chapter 213 may result in administrative penalties.

2. In addition to the rules of the Commission, the applicant may also be required to comply with state and local ordinances and regulations providing for the protection of water quality.

Prior to Commencement of Construction:

3. All contractors conducting regulated activities at the referenced project location shall be provided a copy of this notice of approval. At least one complete copy of the approved WPAP and this notice of approval shall be maintained at the project location until all regulated activities are completed.

4. Modification to the activities described in the referenced WPAP application following the date of approval may require the submittal of a plan to modify this approval, including the payment of appropriate fees and all information necessary for its review and approval prior to initiating construction of the modifications.

5. The applicant must provide written notification of intent to commence construction, replacement, or rehabilitation of the referenced project. Notification must be submitted to the Austin Regional Office no later than 48 hours prior to commencement of the regulated activity. Written notification must include the date on which the regulated activity will commence, the name of the approved plan and program ID number for the regulated activity, and the name of the prime contractor with the name and telephone number of the contact person. The executive director will use the notification to determine if the approved plan is eligible for an extension.

6. Temporary erosion and sedimentation (E&S) controls, i.e., silt fences, rock berms, stabilized construction entrances, or other controls described in the approved WPAP, must be installed prior to construction and maintained during construction. Temporary E&S controls may be removed when vegetation is established, and the construction area is stabilized. The TCEQ may monitor stormwater discharges from the site to evaluate the adequacy of temporary E&S control measures. Additional controls may be necessary if excessive solids are being discharged from the site.

7. All borings with depths greater than or equal to 20 feet must be plugged with non-shrink grout from the bottom of the hole to within three (3) feet of the surface. The remainder of the hole must be backfilled with cuttings from the boring. All borings less than 20 feet must be backfilled with cuttings from the boring. All borings must be backfilled or plugged within four (4) days of completion of the drilling operation. Voids may be filled with gravel.

During Construction:

8. During the course of regulated activities related to this project, the applicant or agent shall comply with all applicable provisions of 30 TAC Chapter 213, Edwards Aquifer. The applicant shall remain responsible for the provisions and conditions of this approval until such responsibility is legally transferred to another person or entity.

9. If any sensitive feature (caves, solution cavities, sink holes, etc.) is discovered during construction, all regulated activities near the feature must be suspended immediately. The applicant or his agent must immediately notify the Austin Regional Office of the discovery of the feature. Regulated activities near the feature may not proceed until the executive director has reviewed and approved the methods proposed to protect the feature and the aquifer from potentially adverse impacts to water quality. The plan must be sealed, signed, and dated by a Texas licensed professional engineer.

10. If sediment escapes the construction site, the sediment must be removed at a frequency sufficient to minimize offsite impacts to water quality (e.g., fugitive sediment in street being washed into surface streams or sensitive features by the next rain). Sediment must be removed from sediment traps or sedimentation ponds not later than when design capacity has been reduced by 50 percent. Litter, construction debris, and construction chemicals shall be prevented from becoming stormwater discharge pollutants.

11. All water wells, including injection, dewatering, and monitoring wells must be in compliance with the requirements of the Texas Department of Licensing and Regulation under Title 16 TAC Chapter 76 (relating to Water Well Drillers and Pump Installers) and all other locally applicable rules, as appropriate.

12. Intentional discharges of sediment laden water are not allowed. If dewatering becomes necessary, the discharge will be filtered through appropriately selected best management practices. These may include vegetated filter strips, sediment traps, rock berms, silt fence rings, etc.

13. The following records shall be maintained and made available to the executive director upon request: the dates when major grading activities occur, the dates when construction activities temporarily or permanently cease on a portion of the site, and the dates when stabilization measures are initiated.

14. Stabilization measures shall be initiated as soon as practicable in portions of the site where construction activities have temporarily or permanently ceased, and construction activities will not resume within 21 days. When the initiation of stabilization measures by the 14th day is precluded by weather conditions, stabilization measures shall be initiated as soon as practicable.

After Completion of Construction:

15. A Texas licensed professional engineer must certify in writing that the permanent BMPs or measures were constructed as designed. The certification letter must be submitted to the Austin Regional Office within 30 days of site completion.

16. The applicant shall be responsible for maintaining the permanent BMPs during and after construction until such time as the maintenance obligation is either assumed in writing by another entity having ownership or control of the property (such as without limitation, an owner's association, a new property owner or lessee, a district, or municipality) or the ownership of the property is transferred to the entity. The regulated entity shall then be responsible for maintenance until another entity assumes such obligations in writing or ownership is transferred. A copy of the transfer of responsibility must be filed with the executive director through Austin Regional Office within 30 days of the transfer.

17. Upon legal transfer of this property, the new owner(s) is required to comply with all terms of the approved Edwards Aquifer protection plan. If the new owner intends to commence any new regulated activity on the site, a new Edwards Aquifer protection plan that specifically addresses the new activity must be submitted to the executive director.

18. An Edwards Aquifer protection plan approval or extension will expire, and no extension will be granted if more than 50 percent of the total construction has not been completed within ten years from the initial approval of a plan.

This action is taken under authority delegated by the Executive Director of the Texas Commission on Environmental Quality. If you have any questions or require additional information, please contact Mr. Kevin Lee Smith, P.E. of the Edwards Aquifer Protection Program of the Austin Regional Office at 512-339-2929.

Sincerely,

Lillian Butler

Lillian Butler, Section Manager
Edwards Aquifer Protection Program
Texas Commission on Environmental Quality

LIB/kls

cc: Mr. Mark Frye, P.E., Parsons Corporation
Mr. Mike Sexton, P.E., Central Texas Regional Mobility Authority

ATTACHMENT B – NARRATIVE OF PROPOSED MODIFICATION

1.1 DESCRIPTION OF PROPOSED MODIFICAITON

The previously approved plan, 183N Phase 2, proposed converting existing subsurface sedimentation-filtration vault ponds to surface batch detention ponds by removing their tops and extending their walls to finished grade. This proposed modification of the previously approved 183N Phase 2 Edwards Aquifer Protection Program Roadway (EAPP) Application, hereafter referred to as 183N Phase 2 Mod, involves the implementation of subsurface Contech Jellyfish® Filter systems as permanent BMPs instead of surface batch detention ponds for treatment of runoff associated with subbasins 1A, 1B, 1C, 2A, 2B, 2C and 2D2 within the Lake Creek Watershed. Pond 2D1 will remain a surface batch detention pond with stacked detention as previously approved in the 183N Phase 2 application.

The existing underground sedimentation/filtration vault ponds associated with the subbasins mentioned above will be abandoned in place and filled with sand or flowable backfill and their inlets/outlets will be plugged. All other permanent BMPs previously approved in the 183N Phase 2 application will remain unchanged. Acreage has not been added or removed from the approved plan nor has the acreage of impervious cover or % impervious cover changed.

Existing drainage systems that connect to existing splitter boxes associated with the existing underground sedimentation/filtration vaults treating runoff from subbasins 1A, 1B, 1C, 2A, 2B, 2C and 2D2 will be rerouted and connected to new splitter boxes that will divert flow to Contech Jellyfish® Filter systems where the TSS load will be removed. After passing through the filter cartridges, diverted flow will be conveyed to existing outfalls in new reinforced concrete pipe. Revised plans illustrating the location of proposed Jellyfish systems and the reconfigured drainage systems necessary to accommodate the Jellyfish systems are provided in Attachment G Construction Plans. TCEQ TSS load removal calculations were derived from spreadsheets provided by Contech and Jellyfish filter systems were sized using Contech's spreadsheets.

The proposed modification to utilize Contech Jellyfish® Filter systems as permanent BMPs provides the following features and benefits:

- meets regulatory requirements and provides equal or greater TSS load removal.
- Contech Jellyfish® Filter systems are prefabricated self-contained units
- proven history of effectiveness
- minimizes high risk construction adjacent to existing project features
- minimizes reuse of aged existing vaults
- improves construction schedule for permanent BMPs

ATTACHMENT C – CURRENT SITE PLAN OF THE APPROVED PROJECT

Current site plans are provided on the following pages for the elements included in the approved 183N Phase 2 application. Phase 1 construction is substantially complete however none of the retrofit work to convert existing subsurface sedimentation-filtration vaults to surface batch detention ponds has commenced.

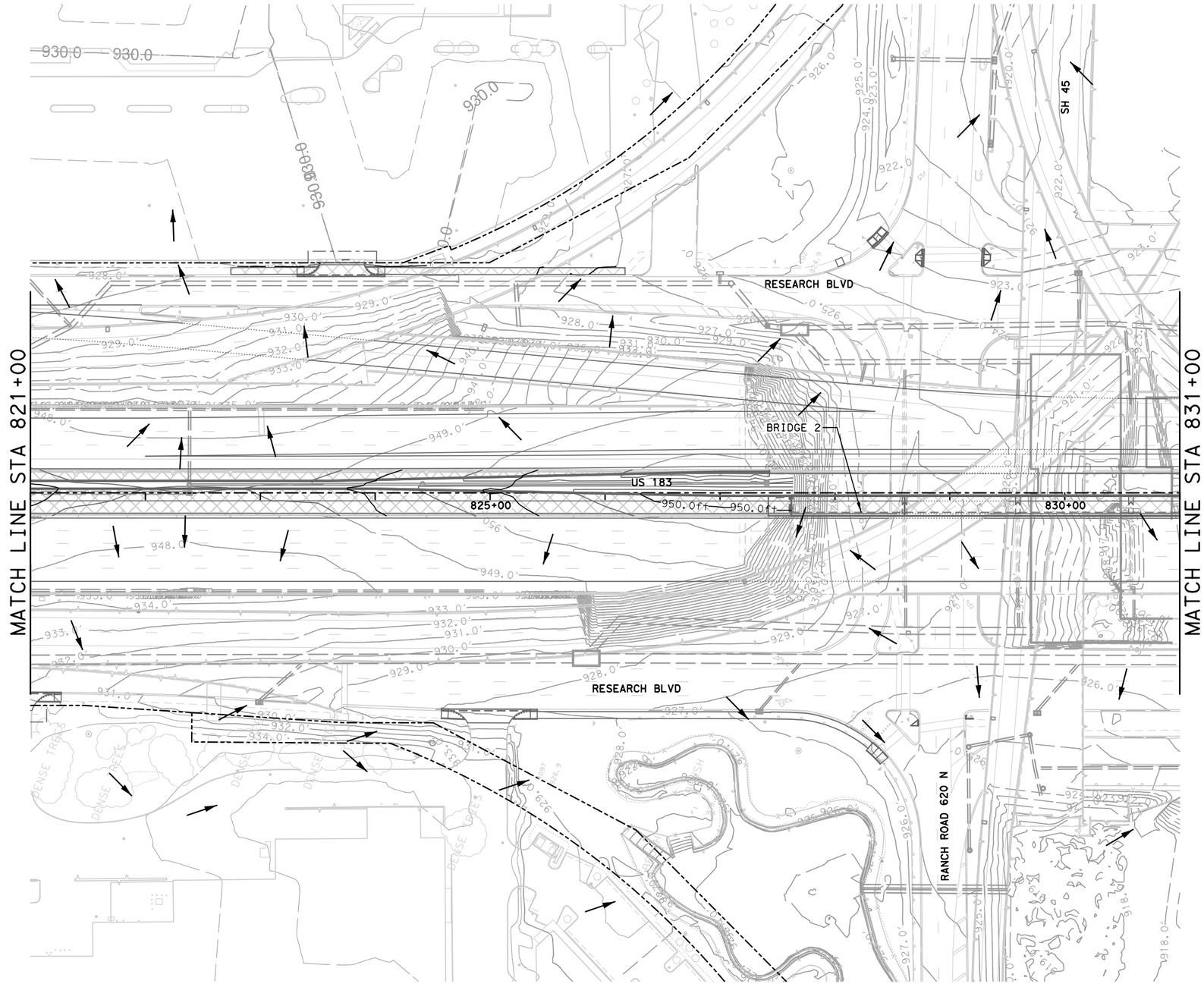

HORIZONTAL SCALE
0′ 50′ 100′

LEGEND

- SURFACE FLOW DIRECTION
- EXISTING DRAINAGE
- DRAINAGE INSTALLED DURING PH 1
- PROPOSED DRAINAGE
- DRAINAGE DITCH
- TREE PROTECTION
- ROCK FILTER DAM
- SF — SILT FENCE
- SILT FENCE INLET PROTECTION
- GRAVEL BAG INLET PROTECTION
- SF — SILT FENCE, INSTALLED IN PH 1
- SILT FENCE INLET PROTECTION, INSTALLED IN PH 1
- GRAVEL BAG INLET PROTECTION, INSTALLED IN PH 1
- DISTURBED AREA ROADWAY THIS PHASE
- BRIDGE DECK THIS PHASE
- DISTURBED AREA PREVIOUS PHASE
- ROW — CONTROL OF ACCESS
- TEMPORARY CONSTRUCTION EASEMENT

NOT FOR CONSTRUCTION

FOR PERMITTING PURPOSES ONLY

NOTE:
PHASE 1 BMP'S TO REMAIN IN PLACE UNTIL COMPLETION OF PAVEMENT UPSTREAM OF THE BMP.

ISSUE RECORD		
NO.	DESCRIPTION	DATE
00	183N PHASE 2 RDWY EAPP APP	20MAY22

CENTRAL TEXAS REGIONAL MOBILITY AUTHORITY

GREAT HILLS CONSTRUCTORS

PARSONS
TBPE Registration No. F-1481

183 NORTH MOBILITY
SEGMENT 1A
EAPP SITE PLAN
183N PHASE 2
STA 821+00 TO STA 831+00

DESIGNED	FED. RD. DIV. NO.		FEDERAL AID PROJECT NO.	HIGHWAY NO.
DRAWN DL	6			US 183
	STATE	DISTRICT	COUNTY	DRAWING
CHECKED MF	TEXAS	AUSTIN	TRAVIS, WILLIAMSON	1ASWP204
APPROVED MF	CONTROL	SECTION	JOB	SHEET NO.
	0151	06	143	

User: p0097627 Date: 5/10/2022 Time: 10:44:51 AM Pen Table: 183N_Standard.tbl Plot Config: 183N PDF.pltcfg
File Name: 1A-SWP2-04.dgn

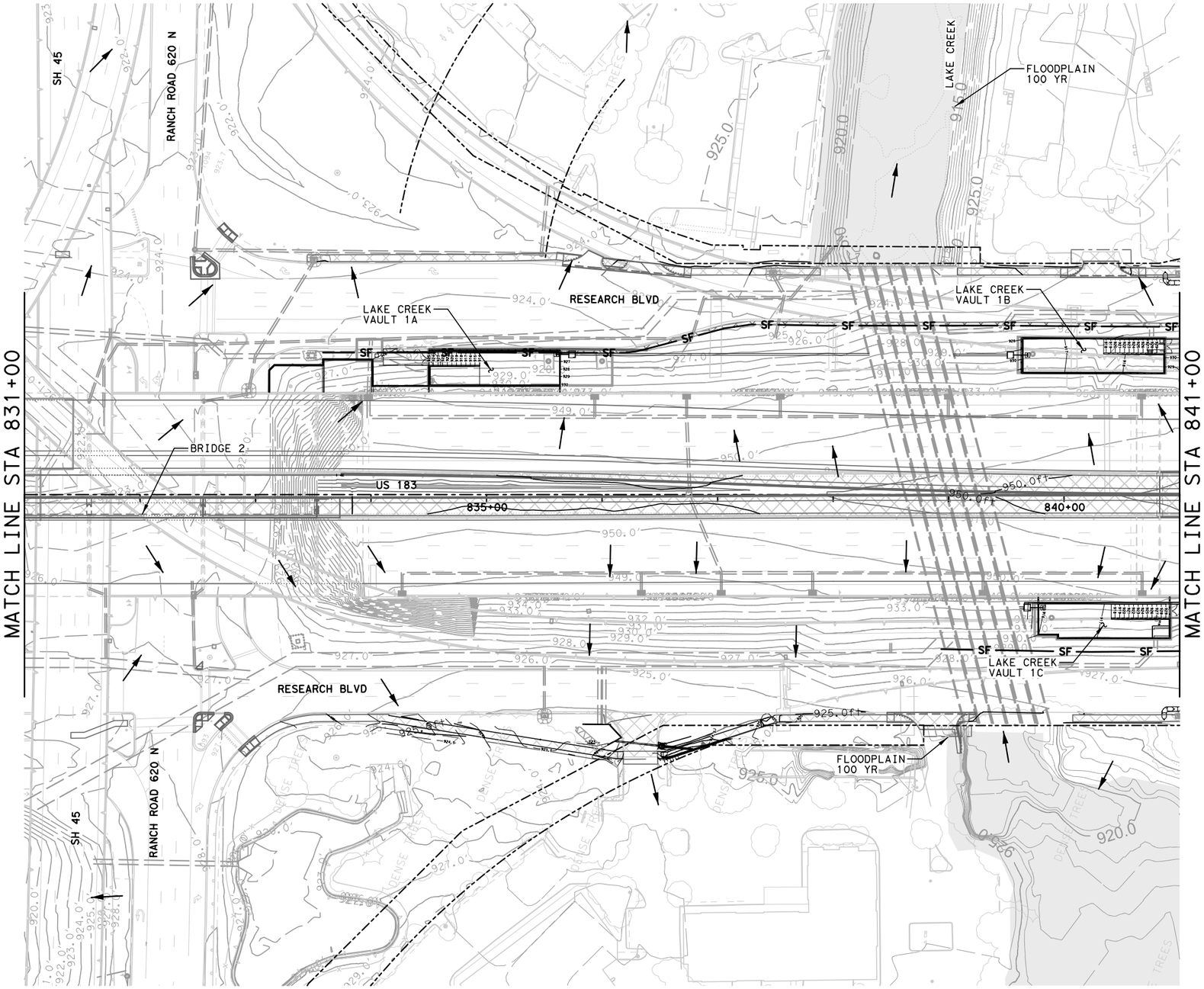

HORIZONTAL SCALE
0' 50' 100'

LEGEND

- SURFACE FLOW DIRECTION
- EXISTING DRAINAGE
- DRAINAGE INSTALLED DURING PH 1
- PROPOSED DRAINAGE
- DRAINAGE DITCH
- TREE PROTECTION
- ROCK FILTER DAM
- SF — SILT FENCE
- SILT FENCE INLET PROTECTION
- GRAVEL BAG INLET PROTECTION
- SF — SILT FENCE, INSTALLED IN PH 1
- SILT FENCE INLET PROTECTION, INSTALLED IN PH 1
- GRAVEL BAG INLET PROTECTION, INSTALLED IN PH 1
- DISTURBED AREA ROADWAY THIS PHASE
- BRIDGE DECK THIS PHASE
- DISTURBED AREA PREVIOUS PHASE
- ROW — CONTROL OF ACCESS
- TEMPORARY CONSTRUCTION EASEMENT

NOTE:
PHASE 1 BMP'S TO REMAIN IN PLACE UNTIL COMPLETION OF PAVEMENT UPSTREAM OF THE BMP.

NOTE:
FOR WATER QUALITY BASINS UNDER CONTRUCTION. BASIN OUTFALL WILL BE CLOSED AND THE BASIN WILL BE DEWATERED AS NEEDED. WATER TO BE PUMPED THROUGH DEWATERING BAGS TO ESURE REMOVAL OF SEDIMENT.

NOT FOR CONSTRUCTION

FOR PERMITTING PURPOSES ONLY

ISSUE RECORD

NO.	DESCRIPTION	DATE
00	183N PHASE 2 RDWY EAPP APP	20MAY22

CENTRAL TEXAS REGIONAL MOBILITY AUTHORITY

GREAT HILLS CONSTRUCTORS

PARSONS
TBPE Registration No. F-1481

183 NORTH MOBILITY
SEGMENT 1A
EAPP SITE PLAN
183N PHASE 2
STA 831+00 TO STA 841+00

DESIGNED	FED. RD. DIV. NO.		FEDERAL AID PROJECT NO.	HIGHWAY NO.
	6			US 183
DRAWN DL	STATE	DISTRICT	COUNTY	DRAWING
CHECKED MF	TEXAS	AUSTIN	TRAVIS, WILLIAMSON	1ASWP205
APPROVED MF	CONTROL	SECTION	JOB	SHEET NO.
	0151	06	143	

User: p0097627 Date: 5/10/2022 Time: 10:45:12 AM Pen Table: 183N_Standard.tbl Plot Config: 183N PDF.pltcfg
File Name: 1A-SWP2-05.dgn

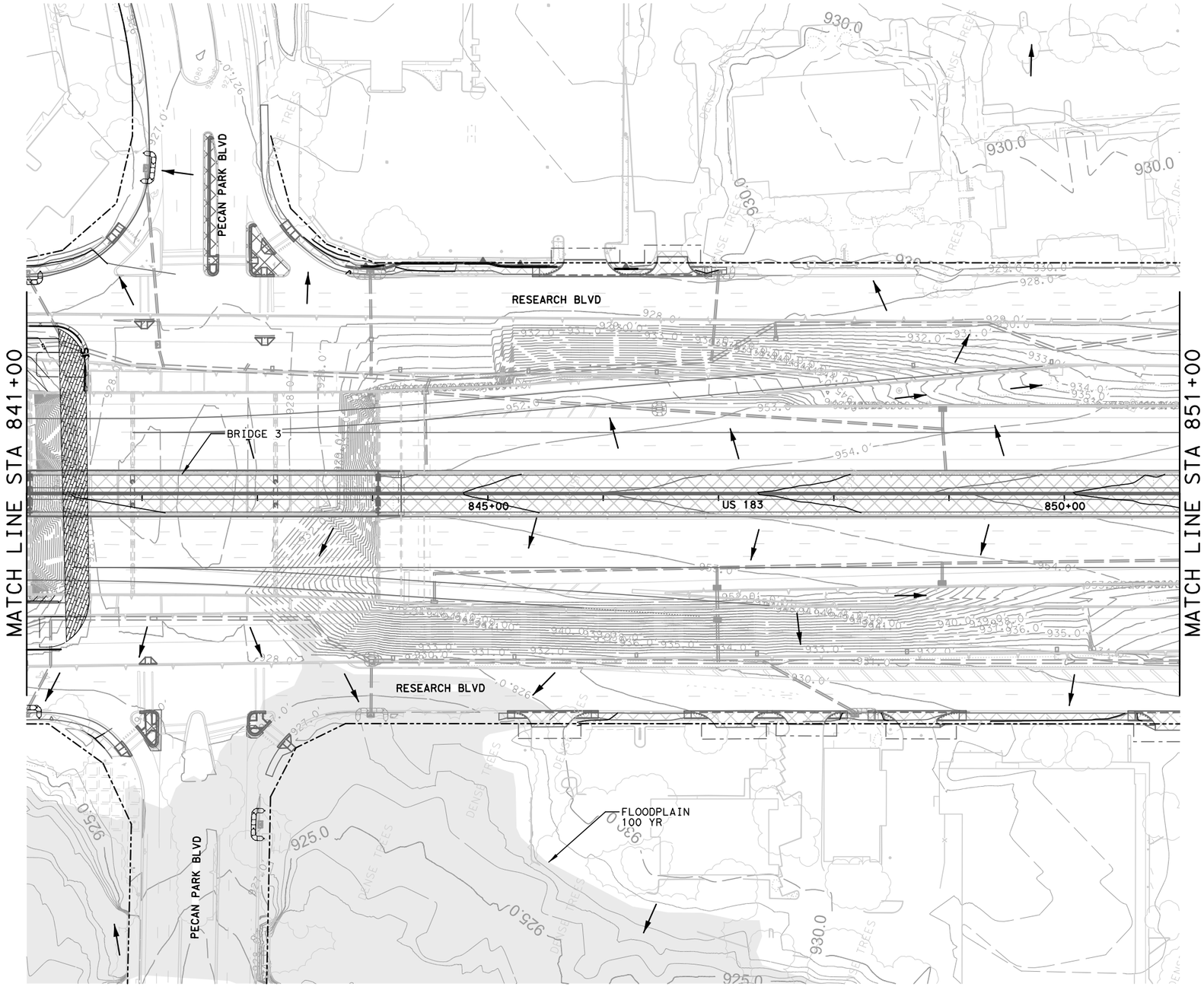

NOTE:
PHASE 1 BMP'S TO REMAIN IN PLACE UNTIL COMPLETION OF PAVEMENT UPSTREAM OF THE BMP.

HORIZONTAL SCALE
0' 50' 100'

LEGEND

- SURFACE FLOW DIRECTION
- EXISTING DRAINAGE
- DRAINAGE INSTALLED DURING PH 1
- PROPOSED DRAINAGE
- DRAINAGE DITCH
- TREE PROTECTION
- ROCK FILTER DAM
- SF — SILT FENCE
- SILT FENCE INLET PROTECTION
- GRAVEL BAG INLET PROTECTION
- SF — SILT FENCE, INSTALLED IN PH 1
- SILT FENCE INLET PROTECTION, INSTALLED IN PH 1
- GRAVEL BAG INLET PROTECTION, INSTALLED IN PH 1
- DISTURBED AREA ROADWAY THIS PHASE
- BRIDGE DECK THIS PHASE
- DISTURBED AREA PREVIOUS PHASE
- ROW — CONTROL OF ACCESS
- TEMPORARY CONSTRUCTION EASEMENT

NOT FOR CONSTRUCTION

FOR PERMITTING PURPOSES ONLY

ISSUE RECORD

NO.	DESCRIPTION	DATE
00	183N PHASE 2 RDWY EAPP APP	20MAY22

CENTRAL TEXAS REGIONAL MOBILITY AUTHORITY

GREAT HILLS CONSTRUCTORS

PARSONS
TBPE Registration No. F-1481

183 NORTH MOBILITY
SEGMENT 1A
EAPP SITE PLAN
183N PHASE 2
STA 841+00 TO STA 851+00

DESIGNED	FED. RD. DIV. NO.		FEDERAL AID PROJECT NO.	HIGHWAY NO.
	6			US 183
DRAWN DL	STATE	DISTRICT	COUNTY	DRAWING
CHECKED MF	TEXAS	AUSTIN	TRAVIS, WILLIAMSON	1ASWP206
APPROVED MF	CONTROL	SECTION	JOB	SHEET NO.
	0151	06	143	

User: p0097627 Date: 5/10/2022 Time: 10:45:35 AM Pen Table: 183N_Standard.tbl Plot Config: 183N PDF.pltcfg
File Name: 1A-SWP2-06.dgn

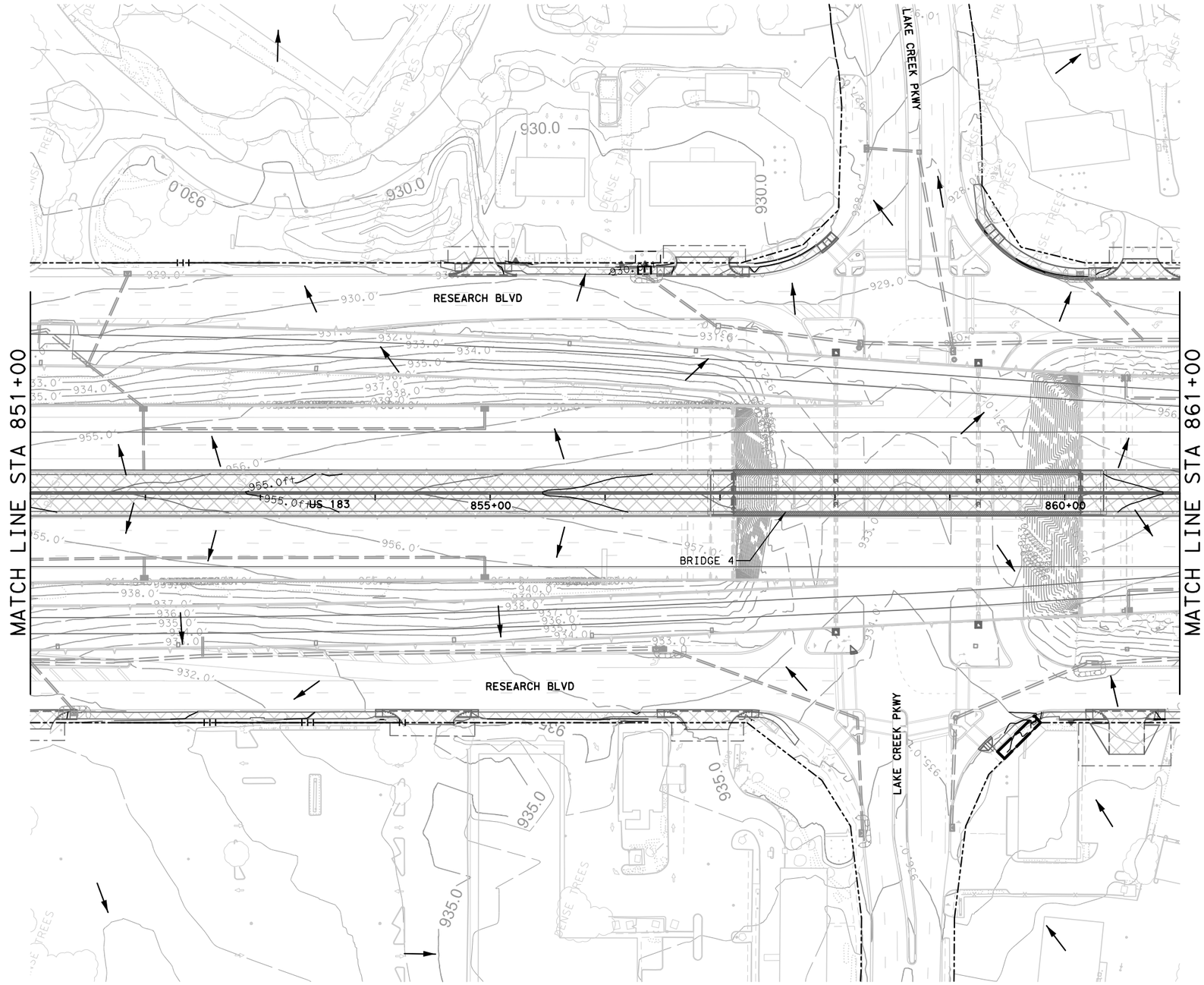

HORIZONTAL SCALE
0' 50' 100'

LEGEND

- SURFACE FLOW DIRECTION
- EXISTING DRAINAGE
- DRAINAGE INSTALLED DURING PH 1
- PROPOSED DRAINAGE
- DRAINAGE DITCH
- TREE PROTECTION
- ROCK FILTER DAM
- SF — SILT FENCE
- SILT FENCE INLET PROTECTION
- GRAVEL BAG INLET PROTECTION
- SF — SILT FENCE, INSTALLED IN PH 1
- SILT FENCE INLET PROTECTION, INSTALLED IN PH 1
- GRAVEL BAG INLET PROTECTION, INSTALLED IN PH 1
- DISTURBED AREA ROADWAY THIS PHASE
- BRIDGE DECK THIS PHASE
- DISTURBED AREA PREVIOUS PHASE
- ROW — CONTROL OF ACCESS
- TEMPORARY CONSTRUCTION EASEMENT

NOT FOR CONSTRUCTION

FOR PERMITTING PURPOSES ONLY

ISSUE RECORD

NO.	DESCRIPTION	DATE
00	183N PHASE 2 RDWY EAPP APP	20MAY22

CENTRAL TEXAS REGIONAL MOBILITY AUTHORITY

GREAT HILLS CONSTRUCTORS

PARSONS
TBPE Registration No. F-1481

183 NORTH MOBILITY
SEGMENT 1A
EAPP SITE PLAN
183N PHASE 2
STA 851+00 TO STA 861+00

DESIGNED	FED. RD. DIV. NO.		FEDERAL AID PROJECT NO.	HIGHWAY NO.
	6			US 183
DRAWN DL	STATE	DISTRICT	COUNTY	DRAWING
CHECKED MF	TEXAS	AUSTIN	TRAVIS, WILLIAMSON	1ASWP207
APPROVED MF	CONTROL	SECTION	JOB	SHEET NO.
	0151	06	143	

NOTE:
PHASE 1 BMP'S TO REMAIN IN PLACE UNTIL COMPLETION OF PAVEMENT UPSTREAM OF THE BMP.

User: p0097627 Date: 5/10/2022 Time: 10:46:02 AM Pen Table: 183N_Standard.tbl Plot Config: 183N PDF.pltcfg
File Name: 1A-SWP2-07.dgn

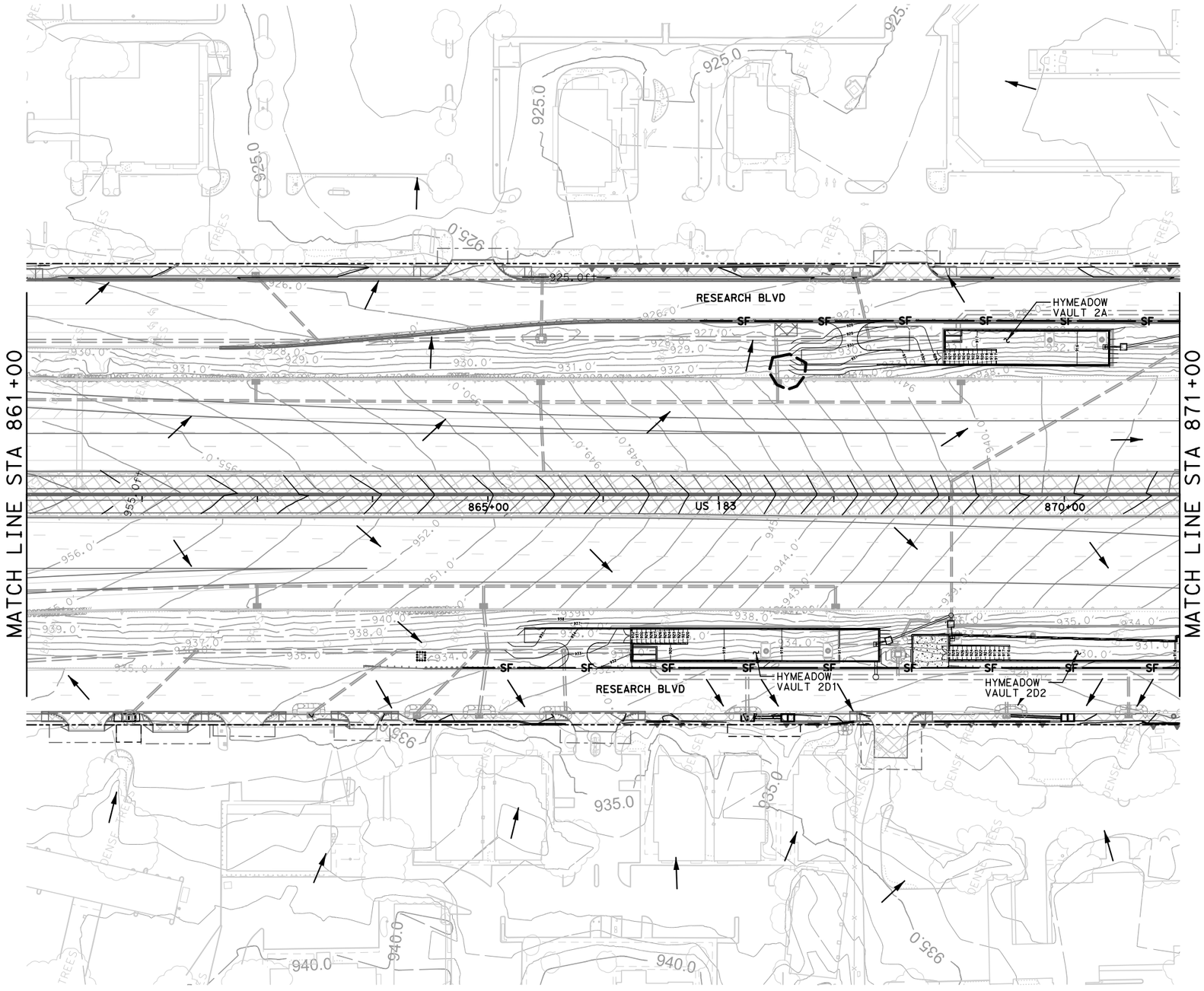

HORIZONTAL SCALE
0' 50' 100'

LEGEND

- SURFACE FLOW DIRECTION
- EXISTING DRAINAGE
- DRAINAGE INSTALLED DURING PH 1
- PROPOSED DRAINAGE
- DRAINAGE DITCH
- TREE PROTECTION
- ROCK FILTER DAM
- SF — SILT FENCE
- SILT FENCE INLET PROTECTION
- GRAVEL BAG INLET PROTECTION
- SF — SILT FENCE, INSTALLED IN PH 1
- SILT FENCE INLET PROTECTION, INSTALLED IN PH 1
- GRAVEL BAG INLET PROTECTION, INSTALLED IN PH 1
- DISTURBED AREA ROADWAY THIS PHASE
- BRIDGE DECK THIS PHASE
- DISTURBED AREA PREVIOUS PHASE
- ROW — CONTROL OF ACCESS
- TEMPORARY CONSTRUCTION EASEMENT

NOT FOR CONSTRUCTION

FOR PERMITTING PURPOSES ONLY

NOTE:
PHASE 1 BMP'S TO REMAIN IN PLACE UNTIL COMPLETION OF PAVEMENT UPSTREAM OF THE BMP.

NOTE:
FOR WATER QUALITY BASINS UNDER CONTRUCTION. BASIN OUTFALL WILL BE CLOSED AND THE BASIN WILL BE DEWATERED AS NEEDED. WATER TO BE PUMPED THROUGH DEWATERING BAGS TO ESURE REMOVAL OF SEDIMENT.

ISSUE RECORD

NO.	DESCRIPTION	DATE
00	183N PHASE 2 RDWY EAPP APP	20MAY22

CENTRAL TEXAS REGIONAL MOBILITY AUTHORITY

GREAT HILLS CONSTRUCTORS

PARSONS
TBPE Registration No. F-1481

183 NORTH MOBILITY
SEGMENT 1A
EAPP SITE PLAN
183N PHASE 2
STA 861+00 TO STA 871+00

DESIGNED	FED. RD. DIV. NO.		FEDERAL AID PROJECT NO.	HIGHWAY NO.
DRAWN DL	6			US 183
	STATE	DISTRICT	COUNTY	DRAWING
CHECKED MF	TEXAS	AUSTIN	TRAVIS, WILLIAMSON	1ASWP208
APPROVED MF	CONTROL	SECTION	JOB	SHEET NO.
	0151	06	143	

User: p0097627 Date: 5/10/2022 Time: 10:46:24 AM Pen Table: 183N_Standard.tbl Plot Config: 183N PDF.pltcfg
File Name: 1A-SWP2-08.dgn

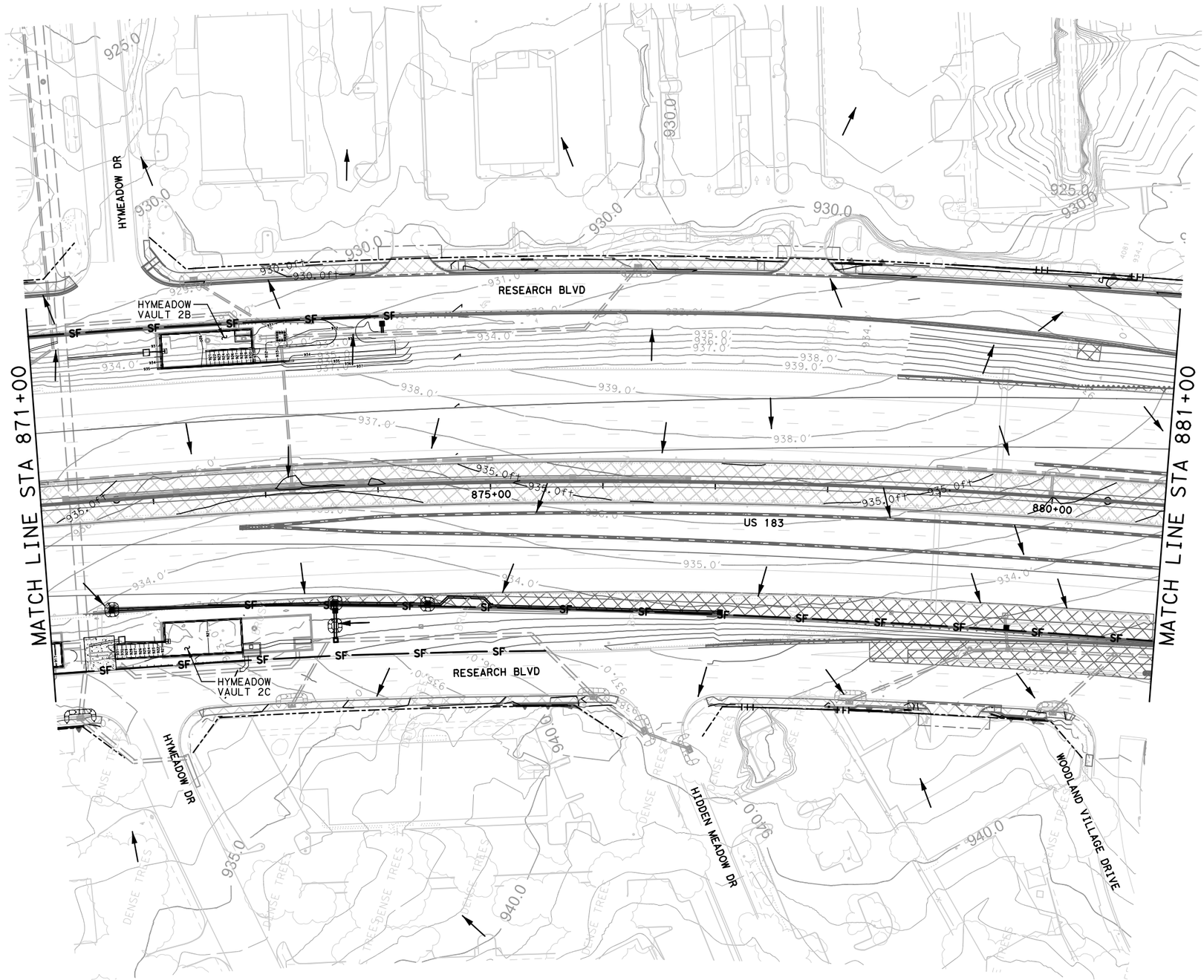

HORIZONTAL SCALE
0' 50' 100'

LEGEND

- SURFACE FLOW DIRECTION
- EXISTING DRAINAGE
- DRAINAGE INSTALLED DURING PH 1
- PROPOSED DRAINAGE
- DRAINAGE DITCH
- TREE PROTECTION
- ROCK FILTER DAM
- SF — SILT FENCE
- SILT FENCE INLET PROTECTION
- GRAVEL BAG INLET PROTECTION
- SF — SILT FENCE, INSTALLED IN PH 1
- SILT FENCE INLET PROTECTION, INSTALLED IN PH 1
- GRAVEL BAG INLET PROTECTION, INSTALLED IN PH 1
- DISTURBED AREA ROADWAY THIS PHASE
- BRIDGE DECK THIS PHASE
- DISTURBED AREA PREVIOUS PHASE
- ROW — CONTROL OF ACCESS
- TEMPORARY CONSTRUCTION EASEMENT

NOTE:
PHASE 1 BMP'S TO REMAIN IN PLACE UNTIL COMPLETION OF PAVEMENT UPSTREAM OF THE BMP.

NOTE:
FOR WATER QUALITY BASINS UNDER CONTRUCTION. BASIN OUTFALL WILL BE CLOSED AND THE BASIN WILL BE DEWATERED AS NEEDED. WATER TO BE PUMPED THROUGH DEWATERING BAGS TO ESURE REMOVAL OF SEDIMENT.

NOT FOR CONSTRUCTION

FOR PERMITTING PURPOSES ONLY

ISSUE RECORD

NO.	DESCRIPTION	DATE
00	183N PHASE 2 RDWY EAPP APP	20MAY22

CENTRAL TEXAS REGIONAL MOBILITY AUTHORITY

GREAT HILLS CONSTRUCTORS

PARSONS
TBPE Registration No. F-1481

183 NORTH MOBILITY
SEGMENT 1A
EAPP SITE PLAN
183N PHASE 2
STA 871+00 TO STA 881+00

DESIGNED	FED. RD. DIV. NO.		FEDERAL AID PROJECT NO.	HIGHWAY NO.
	6			US 183
DRAWN DL	STATE	DISTRICT	COUNTY	DRAWING
CHECKED MF	TEXAS	AUSTIN	TRAVIS, WILLIAMSON	1ASWP209
APPROVED MF	CONTROL	SECTION	JOB	SHEET NO.
	0151	06	143	

User: p0097627 Date: 5/10/2022 Time: 10:46:50 AM Pen Table: 183N_Standard.tbl Plot Config: 183N PDF.pltcfg
File Name: 1A-SWP2-09.dgn

EDWARDS AQUIFER PROTECTION PROGRAM ROADWAY APPLICATION (TCEQ-20872)

Edwards Aquifer Protection Program Roadway Application

Texas Commission on Environmental Quality

This application is intended only for projects which a major roadway is designed for construction, such as State highways, County roads, and City thoroughfares.

Designed for Regulated Activities on the Contributing Zone to the Edwards Aquifer in relation to 30 TAC §213.24, Regulated Activities on the Edwards Aquifer Recharge Zone, in relation to 30 TAC §213.5(b), Effective June 1, 1999.

To ensure that the application is administratively complete, confirm that all fields in the form are complete, verify that all requested information is provided, consistently reference the same site and contact person in all forms in the application, and ensure forms are signed by the appropriate party.

Note: Including all the information requested in the form and attachments contributes to more streamlined technical reviews.

Signature

To the best of my knowledge, the responses to this form accurately reflect all information requested concerning the proposed regulated activities and methods to protect the Edwards Aquifer.

The application was prepared by:

Print Name of Customer/Agent: Great Hills Constructors

Date: January 29, 2024

Signature of Customer/Agent:

Mark Frye , PE

Project Information

1. Regulated Entity (Project) Name: 183 North Mobility Project
2. County: Williamson and Travis Counties
3. Stream Basin(s): Lake Creek, Rattan Creek, Walnut Creek, Shoal Creek, and Bull Creek
4. Groundwater Conservation District (if applicable): N/A
5. Customer (Applicant):

   Contact Person: Pat Pluenneke
   Entity: Great Hills Constructors
   Mailing Address: 9430 Research Blvd, Bldg 4, Suite 400
   City, State: Austin, TX Zip: 78759
   Telephone: 512-619-5238
   Email Address: ppluenneke@walshgroup.com

6. Agent (Representative):

Contact Person: Mark Frye, PE
Entity: Parsons Corporation
Mailing Address: 9101 Burnet Rd, Suite 210
City, State: Austin, TX Zip: 78758
Telephone: 512-470-9703
Email Address: mark.frye@parsons.com

7. Landowner of R.O.W. (Right of Way)
Person or entity responsible for maintenance of water quality Best Management Practices (BMPs), if not applicant.

Contact Person: Mike Sexton, PE
Entity: Central Texas Regional Mobility Authority
Mailing Address: 3300 N. I-35, Suite 300
City, State: Austin, TX Zip: 78705
Telephone: 512-658-5013
Email Address: msexton@ctrma.org

8. ☒ **The TCEQ must be able to inspect the project site or the application will be returned**. Sufficient survey marking is provided on the project to allow TCEQ regional staff to locate the boundaries and alignment of any regulated activities and the geologic or manmade features noted in the Geologic Assessment.

☐ Survey marking will be completed by this date: The Project site is the existing right-of-way (ROW) of US Highway 183 from 1800' north of SH 45 North to south Loop 1 (MoPac) interchange therefore survey staking is not present. A project map with existing ROW is provided with the EAPP Roadway Application Attachment C, Figure 4 Complete Site Map.

9. ☒ **Attachment A - Road Map**. A road map showing directions to and the location of the project site is attached. The map clearly shows the boundary of the project site.

10. ☒ **Attachment B - USGS Quadrangle**. A copy of the official 7 ½ minute USGS Quadrangle Map (Scale: 1" = 2000') is attached. The map(s) clearly show:

☒ Project site boundaries
☒ USGS Quadrangle Name(s)
☒ All drainage paths from site to surface waters

11. ☒ **This project extends into (Check all that apply):**

☒ Recharge Zone (RZ)
☐ Contributing Zone (CZ)
☒ Transition Zone (TZ)
☐ Contributing Zone within Transition Zone (CZ/TZ)
☐ Zone not regulated by EAPP

12. ☒ **Attachment C - Project Description**. A detailed narrative description of the proposed project is attached. The project description is consistent throughout the application and contains, at a minimum, the following details:

    ☒ Complete site area [Acres]
    ☒ Offsite upgradient stormwater areas to be captured
    ☒ Impervious area [Acres]
    ☒ Permanent BMP(s)
    ☒ Proposed site use
    ☒ Existing roadway (paved and/or unpaved)
    ☒ Structures to be demolished [Include demo phase]
    ☒ Major interim phases

13. Existing project site conditions are noted below:

    ☒ Existing paved and/or unpaved roads
    ☐ Undeveloped (Cleared)
    ☐ Undeveloped (Undisturbed/Not cleared)
    ☐ Existing commercial site
    ☐ Existing industrial site
    ☐ Existing residential site
    ☐ Other: _____

14. ☒ **Attachment D - Factors Affecting Surface Water Quality**. A detailed description of all factors that could affect surface water quality is attached.

15. ☒ Only inert materials as defined by 30 TAC §330.3 will be used as fill material.

16. Type of pavement or road surface to be used:

    ☒ Concrete
    ☒ Asphaltic concrete pavement
    ☒ Permeable Friction Course (PFC)
    ☐ Other: _____

17. Right of Way (R.O.W.) and Pavement Area:

    R.O.W. for project: 627.8 (ac.)
    Length: 63,360 ft.
    Width: varies from 288 ft. to 675 ft.
    Impervious cover (IC): 439.8 (ac.)
    Total of Pavement area 439.8 (ac.) ÷ R.O.W. area 627.8 (ac.) x 100 = 70.0% IC.

    ☒ CAD program was used to determine areas.

☒ Number of travel lanes: proposed: 4 general purpose plus 2 managed lanes each bound, existing: 3 to 4 general purpose lanes each bound

☒ Typical widths of lanes: 11 (ft.)

☒ Are intersections also being improved? (Y/N) N

Site Plan Requirements

Items 18 - 28 must be included on the Site Plan.

18. ☒ The Site Plan must have a minimum scale of 1" = 400'.
    Site Plan Scale: 1" = 100'

19. 100-year floodplain boundaries:

    ☒ Some part(s) of the project site is located within the 100-year floodplain. The floodplain is shown and labeled. The 100-year floodplain boundaries are based on the following specific (including date of material) source(s):FEMA FIRM Map GIS.

    ☐ No part of the project site is located within the 100-year floodplain.

20. ☒ A layout of the development with existing and finished contours at appropriate, but not greater than ten-foot contour intervals is shown. Sensitive features, lots, wells, buildings, roads, culverts, etc. are shown on the site plan.

21. ☒ A figure (map) indicating all paths of drainage from the site to surface waters.
    - ☒ Name all stream crossings: Lake Creek
    - ☒ Drainage patterns and approximate slopes.
    - ☐ There will be no discharge to surface waters.

22. ☒ Distinguish between areas of soil disturbance and areas which will not be disturbed.

23. ☒ Show locations of major structural and nonstructural controls. These are the temporary and permanent best management practices. Include the following:
    - ☐ Show design and location of any hazardous materials traps.
    - ☐ Show design at outfalls of major control structures and conveyances.
    - ☒ A description of the BMPs and measures that prevent pollutants from entering surface streams.

24. Show locations of staging areas or project specific locations (PSL). Are they:
    - ☒ Onsite, within project R.O.W.
    - ☐ Offsite.
    - ☐ Not yet determined. (Requires future authorization)

25. ☒ Show locations where soil stabilization practices are expected to occur.

26. ☒ Show surface waters (including wetlands).

27. Temporary aboveground storage tank facilities:
    - ☐ Temporary aboveground storage tank facilities will be located on this site. Show on site plan.
    - ☒ Temporary aboveground storage tank facilities will not be located on this site.

28. ☒ Plan(s) also include:

- ☒ Sidewalks
- ☒ Shared-use paths
- ☒ Related turn lanes
- ☒ Off-site improvements and staging areas
- ☒ Demolition plans
- ☒ Utility relocations
- ☐ Other improved areas: _____

Permanent Best Management Practices (BMPs)

Description of practices and measures that will be used after construction is completed.

29. ☒ Permanent BMPs and measures have been designed, and will be constructed, operated, and maintained to ensure that 80% of the incremental increase in the annual mass loading of total suspended solids (TSS) from the site caused by the regulated activity is removed. These quantities have been calculated in accordance with technical guidance accepted by the executive director.

- ☒ The TCEQ Technical Guidance Manual (TGM) was used to design permanent BMPs and measures for this site.
- ☐ A technical guidance other than the TCEQ TGM was used to design permanent BMPs and measures for this site. The complete citation for the technical guidance that was used: _____

30. ☒ **Attachment E - BMPs for Upgradient (Offsite) Stormwater.**

- ☒ A description of the BMPs and measures that will be used to prevent pollution of surface water, groundwater, or stormwater that originates upgradient from the site and flows across the site is attached.
- ☐ No surface water, groundwater or stormwater originates upgradient from the site and flows across the site, and an explanation is attached.
- ☐ Permanent BMPs or measures are not required to prevent pollution of surface water, groundwater, or stormwater that originates upgradient from the site and flows across the site, and an explanation is attached.

31. ☒ **Attachment F - BMPs for On-site Stormwater**.

- ☒ A description of the BMPs and measures that will be used to prevent pollution of surface water or groundwater that originates on-site or flows off the site, including pollution caused by contaminated stormwater runoff from the site is attached.
- ☐ Permanent BMPs or measures are not required to prevent pollution of surface water or groundwater that originates on-site or flows off the site, including pollution caused by contaminated stormwater runoff, and an explanation is attached.

32. ☒ **Attachment G - Construction Plans**. Construction plans and design calculations for the proposed permanent BMPs and measures have been prepared by or under the direct supervision of a Texas Licensed Professional Engineer, and are signed, sealed, and dated. Construction plans for the proposed permanent BMPs and measures are attached and include all proposed structural plans and specifications, and appropriate details.

- ☒ Major bridge cross-sections, and roadway plan and profiles
- ☒ BMP plans and details
- ☒ Design calculations

☒ Erosion control
☒ SW3P
☒ TCEQ Construction Notes
☒ EPIC, as necessary

33. ☒ **Attachment H - Inspection, Maintenance, Repair and Retrofit Plan**. A site and BMP specific plan for the inspection, maintenance, repair, and, if necessary, retrofit of the permanent BMPs and measures is attached. The plan fulfills all the following:

    ☒ Prepared and certified by the engineer designing the permanent BMPs and measures.
    ☒ Signed by the owner or responsible party.
    ☒ Outlines specific procedures for documenting inspections, maintenance, repairs, and, if necessary, retrofit.
    ☒ Contains a discussion of recordkeeping procedures.

34. ☐ **Attachment I - Pilot-Scale Field Testing Plan.** Pilot studies for BMPs that are not recognized by the Executive Director require prior approval from the TCEQ. A plan for pilot-scale field testing is attached.

    ☒ N/A

35. ☒ **Attachment J - Measures for Minimizing Surface Stream Contamination.** A description of the measures that will be used to avoid or minimize surface stream contamination and changes in the way in which water enters a stream as a result of the construction and development is attached. The measures address increased stream flashing, the creation of stronger flows, and in-stream effects caused by the regulated activity which increase erosion or may result in water quality degradation.

    ☒ Include permanent spill measures used to contain hydrocarbons or hazardous substances by way of traps, or response contingencies.

36. The applicant is responsible for maintaining the permanent BMPs after construction until such time as the maintenance obligation is either assumed in writing by another entity.

    If the applicant intends to transfer responsibility, check the box below.

    ☒ Yes

    A copy of the transfer of responsibility must be filed with the executive director at the appropriate regional office within 30 days.

Stormwater to be generated by the Proposed Project

Description of practices and measures that will be used during construction.

37. ☒ The site description, controls, maintenance, and inspection requirements for the Storm Water Pollution Prevention Plan (SWPPP or SW3P) developed under the Texas Pollutant Discharge Elimination System (TPDES) general permits for stormwater discharges have been submitted to fulfill paragraphs 30 TAC §213.24(1-5) & §213.5(b) of the technical report.

    ☒ The Temporary Stormwater Section (TCEQ-0602) is included with the application.
    ☐ The SWPPP (SW3P) will serve as the Temporary Stormwater Section (TCEQ-0602).

38. ☒ **Attachment K - Volume and Character of Stormwater**. A detailed description of the volume (quantity) and character (quality) of the stormwater runoff expected to occur from the proposed project is attached. The estimates of stormwater runoff quality and quantity are based on area and type of impervious cover.

    ☒ Include the pre-construction runoff coefficient.
    ☒ Include the post-construction runoff coefficient.

Administrative Information

39. ☒ Submit one (1) original and one (1) copy of the application, plus one electronic copy as needed, for each affected incorporated city, groundwater conservation district, and county in which the project will be located. The TCEQ is required to distribute the additional copies to these jurisdictions.

40. The fee for the plan(s) is based on:

    ☒ The total R.O.W. (as in Item 17).

    ☐ TxDOT roadway project.

ATTACHMENT A – ROAD MAP

A road map showing the boundary of the 183 North Mobility Project (Project) site and directions from TCEQ's Austin Regional office to the Project site are presented in the following pages.

BIG OAK CAVE

BEGIN PROJECT
US 183
STA 795+95.00

620 MEDIAN POND

POND G

POND 1A AIP

JELLYFISH FILTER 1A

POND E

JELLYFISH FILTER 1B

LINE B&C POND

POND F

POND 1B AIP

POND 1C AIP

JELLYFISH FILTER 1C

JELLYFISH FILTER 2A

POND 2A AIP

POND 2D1

POND 2D2 AIP

JELLYFISH FILTER 2D2

POND 2B AIP

JELLYFISH FILTER 2C

JELLYFISH FILTER 2B

POND 2C AIP

POND SPRINGS
POND

TRAVIS/WILLIAMSON
COUNTY LINE

POND WOODS
POND

POND E

TRAVIS/WILLIAMSON
COUNTY LINE

TRAVIS/WILLIAMSON
COUNTY LINE

SEE SHEET 2 OF 3

N

HORIZONTAL SCALE
0' 1000' 2000'

LEGEND

PROJECT ROW

PROJECT ROW WITHIN EARZ

AIP = ABANDON IN PLACE

NOT FOR CONSTRUCTION

FOR PERMITTING PURPOSES ONLY

ISSUE RECORD

NO.	DESCRIPTION	DATE
01	183N PHASE 2 EAPP RDWY APP	31AUG22
02	183N PHASE 2 MOD EAPP RDWY APP	22JAN24

CENTRAL TEXAS REGIONAL MOBILITY AUTHORITY

GREAT HILLS CONSTRUCTORS

PARSONS
TBPE Registration No. F-1481

183 NORTH MOBILITY
EAPP ROADWAY APPLICATION
ATTACHMENT A - ROAD MAP
SHEET 1 OF 3

DESIGNED	FED. RD. DIV. NO.	FEDERAL AID PROJECT NO.	HIGHWAY NO.
	6		US 183
DRAWN DL	STATE	DISTRICT	COUNTY	DRAWING
CHECKED MF	TEXAS	AUSTIN	TRAVIS, WILLIAMSON	
APPROVED MF	CONTROL	SECTION	JOB	SHEET NO.
	0151	05	100	

User: p0097627 Date: 1/30/2024 Time: 6:41:29 AM Pen Table: 183N_Standard.tbl Plot Config: 183N PDF.pltcfg
File Name: WPAP Road Map Exhibit 001.dgn

Microsoft Bing

© 2024 Microsoft Corporation © 2023 TomTom

SEE SHEET 1 OF 3

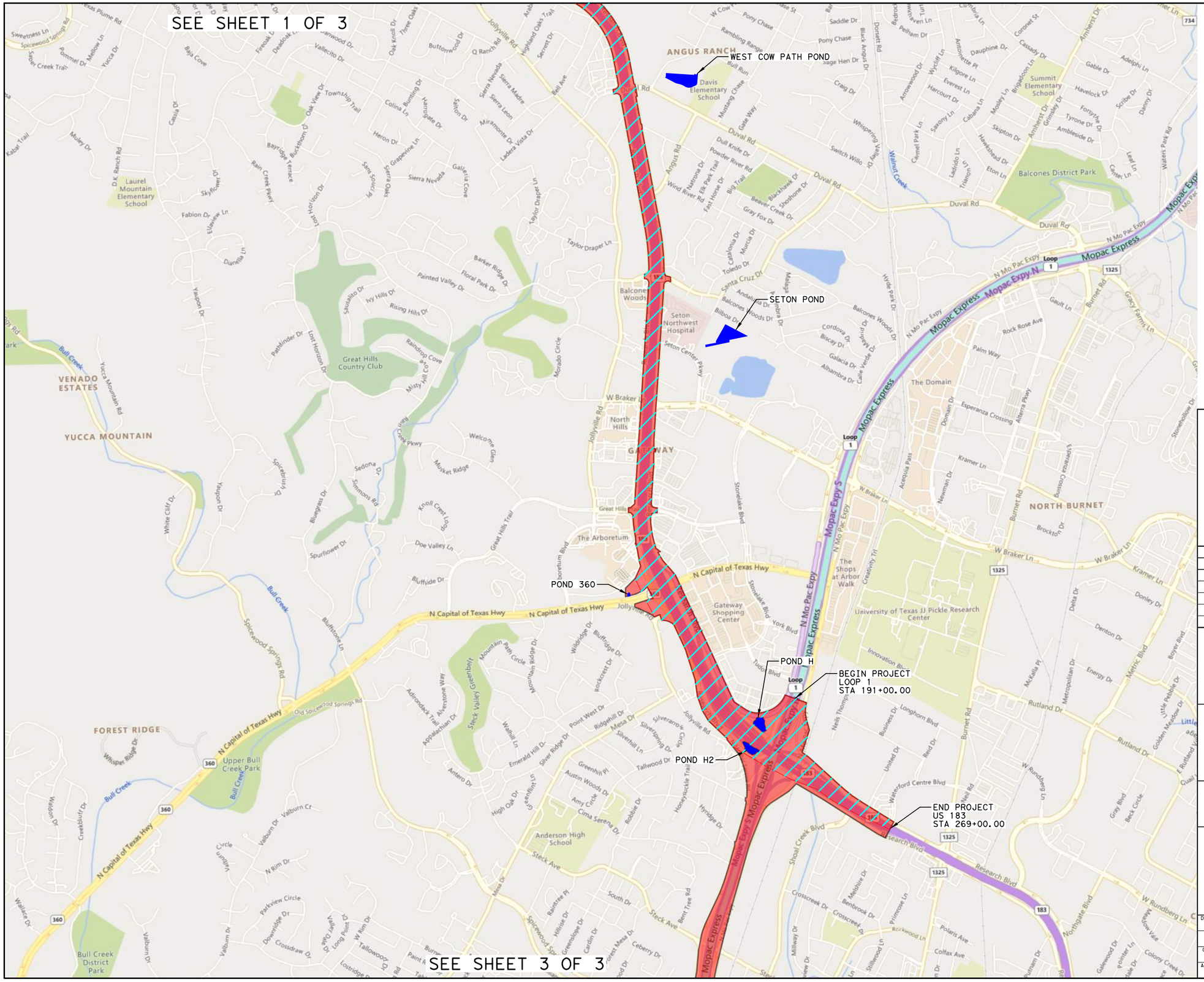

HORIZONTAL SCALE
0' 1000' 2000'

LEGEND

PROJECT ROW

PROJECT ROW WITHIN EARZ

NOT FOR CONSTRUCTION

FOR PERMITTING PURPOSES ONLY

ISSUE RECORD

NO.	DESCRIPTION	DATE
01	183N PHASE 2 EAPP RDWY APP	31AUG22

CENTRAL TEXAS REGIONAL MOBILITY AUTHORITY

GREAT HILLS CONSTRUCTORS

PARSONS
TBPE Registration No. F-1481

183 NORTH MOBILITY
EAPP ROADWAY APPLICATION
ATTACHMENT A - ROAD MAP
SHEET 2 OF 3

DESIGNED	FED. RD. DIV. NO.		FEDERAL AID PROJECT NO.	HIGHWAY NO.
DRAWN DL	6			US 183
CHECKED MF	STATE	DISTRICT	COUNTY	DRAWING
	TEXAS	AUSTIN	TRAVIS, WILLIAMSON	
APPROVED MF	CONTROL	SECTION	JOB	SHEET NO.
	0151	05	100	

User: p0097627 Date: 9/1/2022 Time: 12:16:24 PM Pen Table: 183N_Standard.tbl Plot Config: 183N PDF.pltcfg
File Name: WPAP Road Map Exhibit 002.dgn

Microsoft Bing

© 2022 Microsoft Corporation © 2022 TomTom

SEE SHEET 2 OF 3

END PROJECT
LOOP 1
STA 369+00.00

HORIZONTAL SCALE
0' 1000' 2000'

LEGEND

PROJECT ROW

PROJECT ROW WITHIN EARZ

NOT FOR CONSTRUCTION

FOR PERMITTING PURPOSES ONLY

ISSUE RECORD

NO.	DESCRIPTION	DATE
01	183N PHASE 2 EAPP RDWY APP	31AUG22

CENTRAL TEXAS REGIONAL MOBILITY AUTHORITY

GREAT HILLS CONSTRUCTORS

PARSONS
TBPE Registration No. F-1481

183 NORTH MOBILITY
EAPP ROADWAY APPLICATION
ATTACHMENT A - ROAD MAP
SHEET 3 OF 3

DESIGNED	FED. RD. DIV. NO.		FEDERAL AID PROJECT NO.	HIGHWAY NO.
	6			US 183
DRAWN DL	STATE	DISTRICT	COUNTY	DRAWING
CHECKED MF	TEXAS	AUSTIN	TRAVIS, WILLIAMSON	
APPROVED MF	CONTROL	SECTION	JOB	SHEET NO.
	0151	05	100	

Microsoft Bing
© 2022 Microsoft Corporation © 2022 TomTom

User: p0097627 Date: 9/1/2022 Time: 12:18:32 PM Pen Table: 183N_Standard.tbl Plot Config: 183N PDF.pltcfg
File Name: WPAP Road Map Exhibit 003.dgn

Google Maps

12100 Park 35 Cir, Austin, TX 78753 to US-183, Austin, TX 78759

Drive 8.0 miles, 9 min

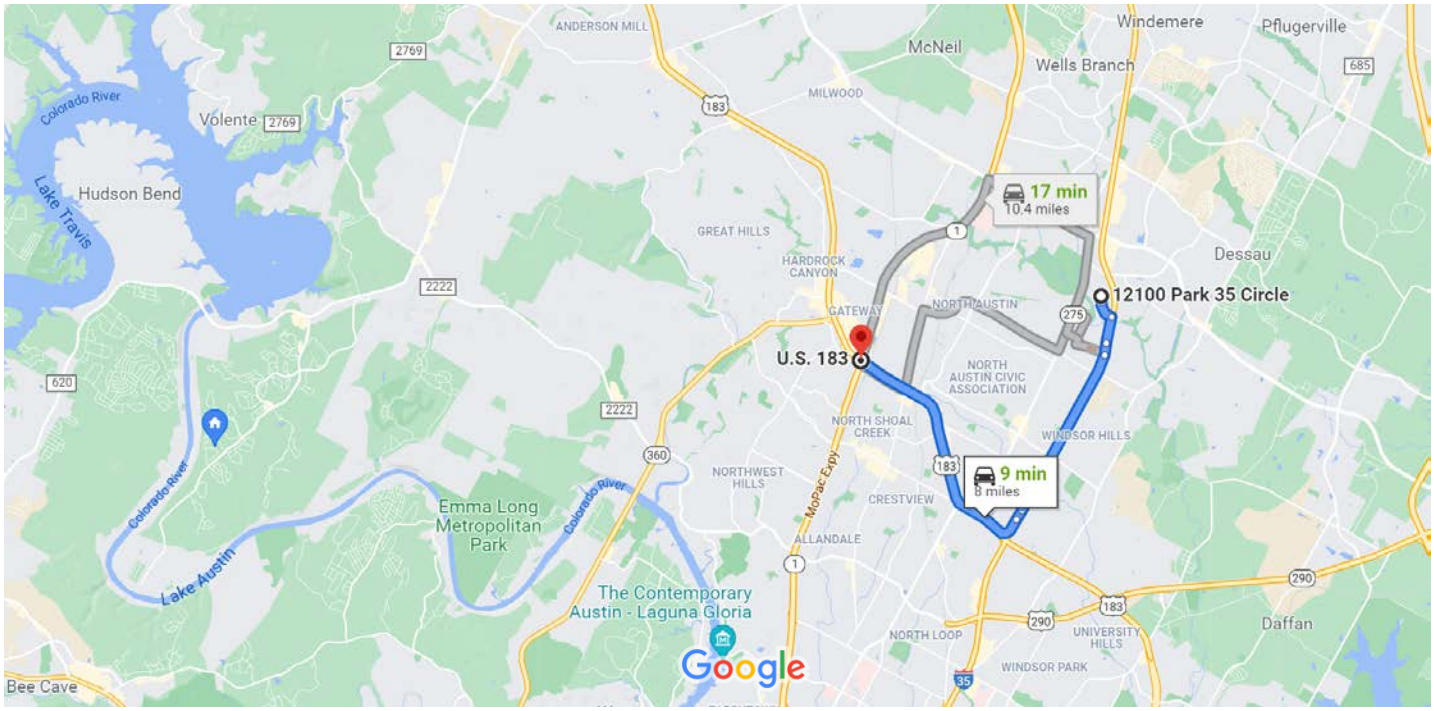

Map data ©2021 Google 2 mi

12100 Park 35 Cir

Austin, TX 78753

Get on I-35 S from Park 35 Cir and S I-35 Frontage Rd

3 min (1.0 mi)

1. Head south toward Park 35 Cir

164 ft

2. Turn right toward Park 35 Cir

377 ft

3. Turn right onto Park 35 Cir

0.3 mi

4. Turn right onto S I-35 Frontage Rd

0.4 mi

5. Use the left lane to take the ramp onto I-35 S

0.2 mi

Continue on I-35 S. Drive to US-183 N

7 min (7.0 mi)

6. Merge onto I-35 S

2.7 mi

7. Take the exit toward US-183 N

0.2 mi

8. Keep right at the fork, follow signs for U.S. 183 N/Lampasas and merge onto US-183 N

4.1 mi

US-183

Austin, TX 78759

These directions are for planning purposes only. You may find that construction projects, traffic, weather, or other events may cause conditions to differ from the map results, and you should plan your route accordingly. You must obey all signs or notices regarding your route.

ATTACHMENT B - USGS QUADRANGLE

USGS Quadrangle Maps (Scale: 1” =2000’) showing the Project site boundary overlaid on Jollyville, Pflugerville, Austin East, and Austin West quadrangles are presented in the following pages.

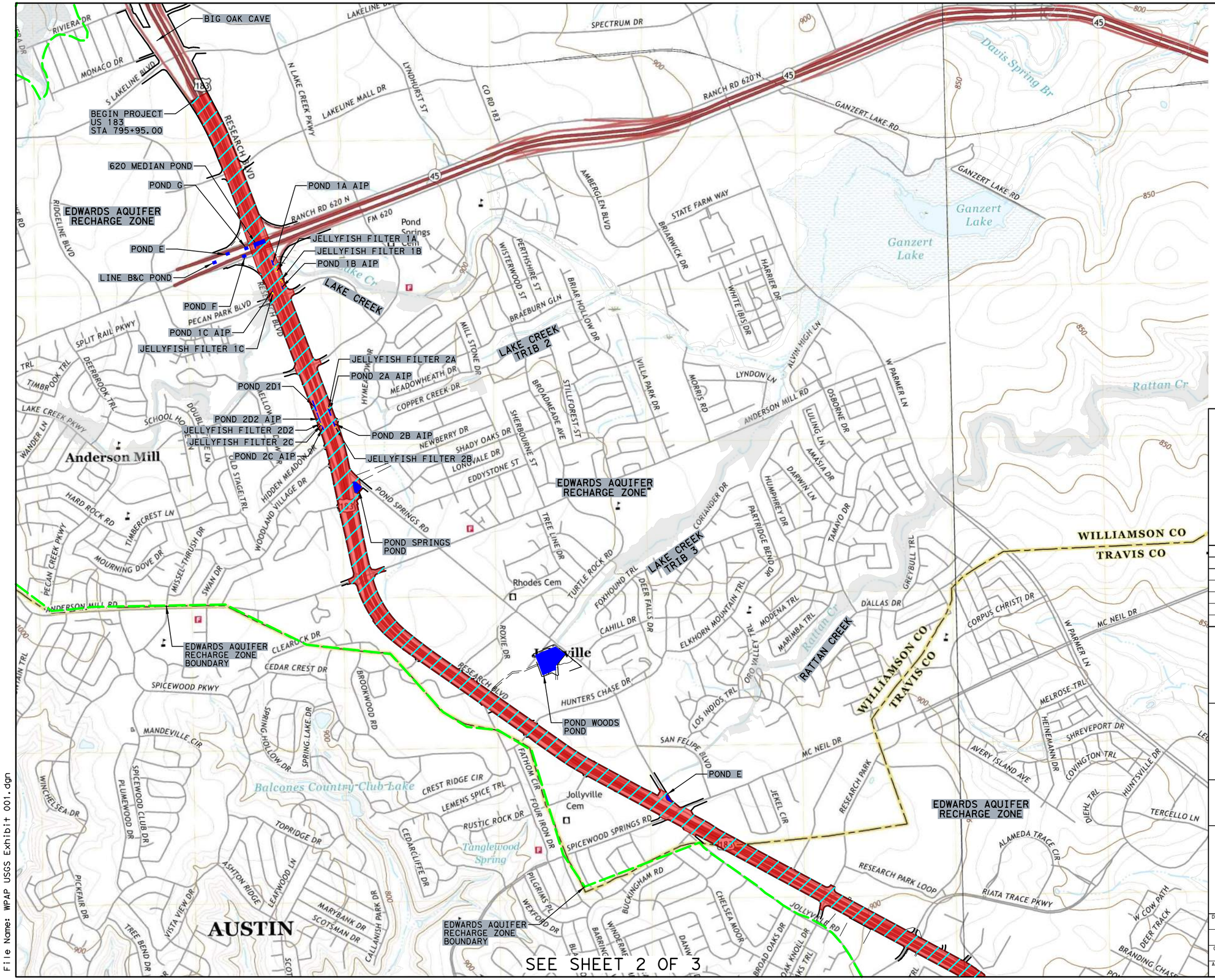

HORIZONTAL SCALE
0' 1000' 2000'

LEGEND

- FEMA FLOODPLAIN BOUNDARY
- EDWARDS AQUIFER RECHARGE ZONE
- EDWARDS AQUIFER TRANSITION ZONE
- WATER QUALITY PONDS
- PROJECT ROW
- PROJECT ROW WITHIN EARZ
- AIP = ABANDON IN PLACE

NOT FOR CONSTRUCTION

FOR PERMITTING PURPOSES ONLY

ISSUE RECORD

NO.	DESCRIPTION	DATE
01	183N PHASE 2 RDWY EAPP APP	31AUG22
02	183N PHASE 2 MOD EAPP RDWY APP	22JAN24

CENTRAL TEXAS REGIONAL MOBILITY AUTHORITY

GREAT HILLS CONSTRUCTORS

PARSONS
TBPE Registration No. F-1481

183 NORTH MOBILITY
ATTACHMENT B - USGS MAPS
JOLLYVILLE & PFLUGERVILLE
SHEET 1 OF 3

DESIGNED	FED. RD. DIV. NO.		FEDERAL AID PROJECT NO.	HIGHWAY NO.
	6			US 183
DRAWN DL	STATE	DISTRICT	COUNTY	DRAWING
CHECKED MF	TEXAS	AUSTIN	TRAVIS, WILLIAMSON	
APPROVED MF	CONTROL	SECTION	JOB	SHEET NO.
	0151	05	100	

User: p0097627 Date: 1/30/2024 Time: 7:07:46 AM Pen Table: 183N_Standard.tbl Plot Config: 183N PDF.pltcfg
File Name: WPAP USGS Exhibit 001.dgn

SEE SHEET 1 OF 3

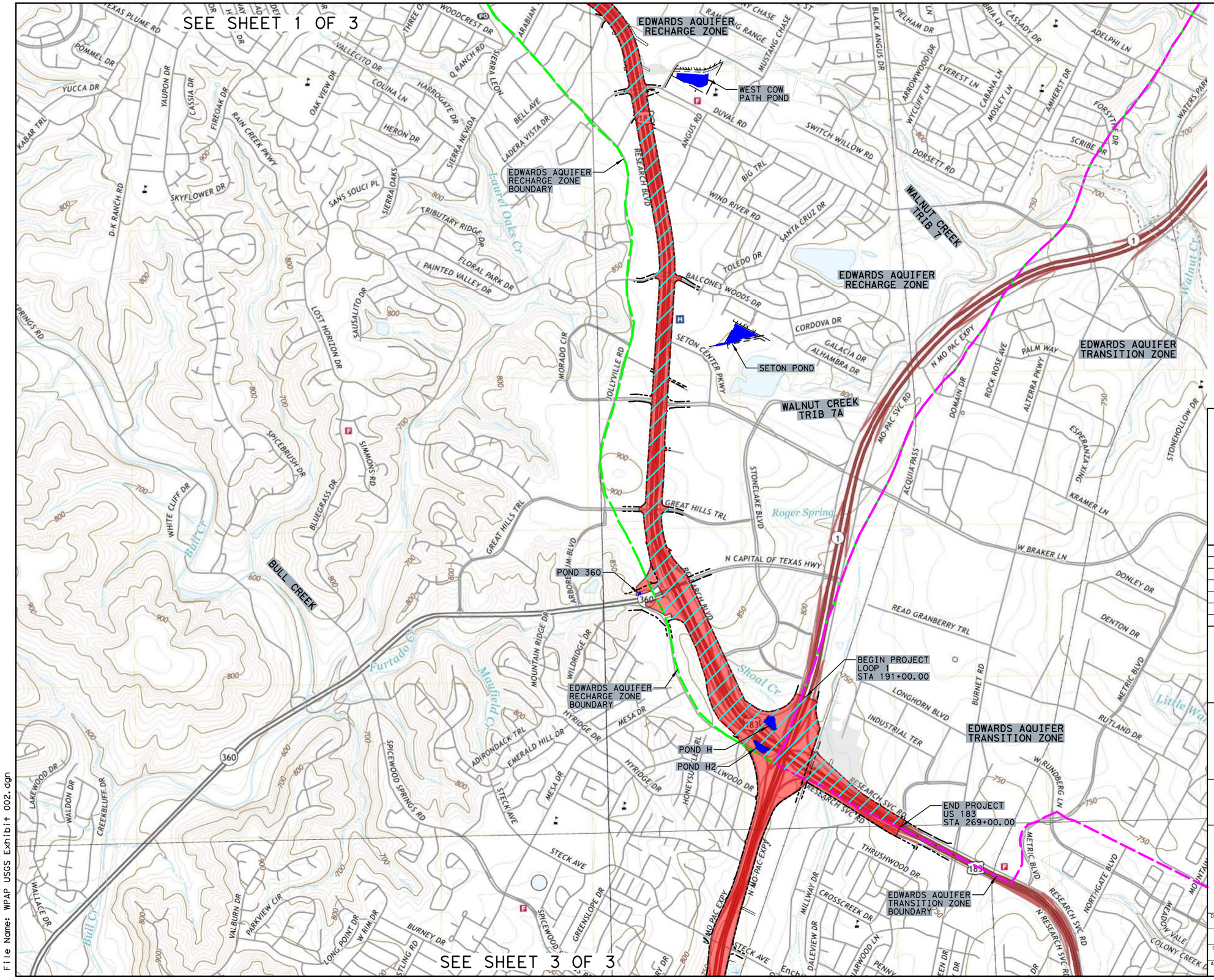

SEE SHEET 3 OF 3

HORIZONTAL SCALE
0' 1000' 2000'

LEGEND

- FEMA FLOODPLAIN BOUNDARY
- EDWARDS AQUIFER RECHARGE ZONE
- EDWARDS AQUIFER TRANSITION ZONE
- WATER QUALITY PONDS
- PROJECT ROW
- PROJECT ROW WITHIN EARZ

NOT FOR CONSTRUCTION

FOR PERMITTING PURPOSES ONLY

ISSUE RECORD

NO.	DESCRIPTION	DATE
01	183N PHASE 2 RDWY EAPP APP	31AUG22

CENTRAL TEXAS REGIONAL MOBILITY AUTHORITY

GREAT HILLS CONSTRUCTORS

PARSONS
TBPE Registration No. F-1481

183 NORTH MOBILITY
ATTACHMENT B - USGS MAP
AUSTIN WEST & AUSTIN EAST
SHEET 2 OF 3

DESIGNED	FED. RD. DIV. NO.		FEDERAL AID PROJECT NO.	HIGHWAY NO.
DRAWN DL	6			US 183
	STATE	DISTRICT	COUNTY	DRAWING
CHECKED MF	TEXAS	AUSTIN	TRAVIS, WILLIAMSON	
APPROVED MF	CONTROL	SECTION	JOB	SHEET NO.
	0151	05	100	

User: p0097627 Date: 9/1/2022 Time: 12:32:13 PM Pen Table: 183N_Standard.tbl Plot Config: 183N PDF.pltcfg
File Name: WPAP USGS Exhibit 002.dgn

SEE SHEET 2 OF 3

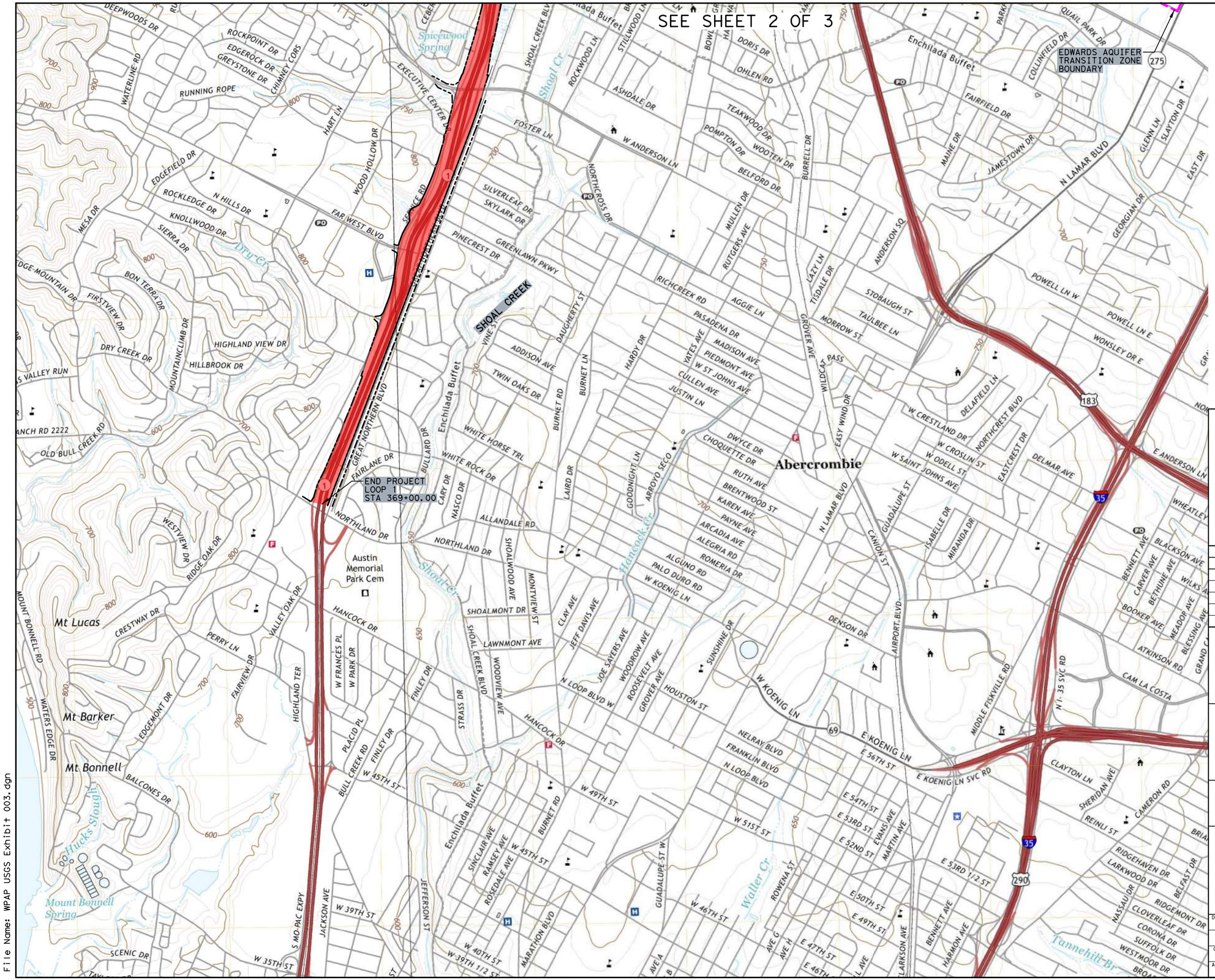

HORIZONTAL SCALE
0' 1000' 2000'

LEGEND

- FEMA FLOODPLAIN BOUNDARY
- EDWARDS AQUIFER RECHARGE ZONE
- EDWARDS AQUIFER TRANSITION ZONE
- WATER QUALITY PONDS
- PROJECT ROW
- PROJECT ROW WITHIN EARZ

NOT FOR CONSTRUCTION

FOR PERMITTING PURPOSES ONLY

ISSUE RECORD

NO.	DESCRIPTION	DATE
01	183N PHASE 2 RDWY EAPP APP	31AUG22

CENTRAL TEXAS REGIONAL MOBILITY AUTHORITY

GREAT HILLS CONSTRUCTORS

PARSONS
TBPE Registration No. F-1481

183 NORTH MOBILITY
ATTACHMENT B - USGS MAP
AUSTIN WEST & AUSTIN EAST
SHEET 3 OF 3

DESIGNED	FED. RD. DIV. NO.		FEDERAL AID PROJECT NO.	HIGHWAY NO.
	6			US 183
DRAWN DL	STATE	DISTRICT	COUNTY	DRAWING
CHECKED MF	TEXAS	AUSTIN	TRAVIS, WILLIAMSON	
APPROVED MF	CONTROL	SECTION	JOB	SHEET NO.
	0151	05	100	

User: p0097627 Date: 9/1/2022 Time: 12:33:38 PM Pen Table: 183N_Standard.tbl Plot Config: 183N PDF.pltcfg
File Name: WPAP USGS Exhibit 003.dgn

ATTACHMENT C – PROJECT DESCRIPTION

1.1 GENERAL PROJECT INFORMATION

This request for modification of the previously approved 183N Phase 2 Edwards Aquifer Protection Program Roadway (EAPP) Application is submitted by Great Hills Constructors for TCEQ approval to authorize discharges over the Edwards Aquifer recharge zone from the 183 North Mobility Project (Project) during and after construction.

Great Hills Constructors (GHC), a joint venture of Archer Western Construction and Sundt Construction, is the Design-Build Contractor for the Project. Parsons Corporation is GHC's lead design sub-contractor for the Project. The Central Texas Regional Mobility Authority (MA) is developing the 183 North Mobility Project which is situated within TxDOT's right-of-way. GHC is delivering the Project under a Design-Build Agreement (DBA) with the MA.

GHC has submitted three EAPP Roadway Applications for specific elements of work such that construction may begin early, and project completion will occur on or before the Completion Deadline, October 12, 2025. The first EAPP Roadway Application submittal, 183N Phase 1-1, was approved by TCEQ March 11, 2022. The second EAPP Roadway Application submittal, 183N Phase 1-2, was approved by TCEQ July 1, 2022. The third and final EAPP roadway application, 183N Phase 2, approved by TCEQ September 30, 2022, involves construction of the following elements of work:

- Outside widening of US 183 general purpose lanes including embankment and retaining wall
- Storm sewer and inlet structures for outside widening of US 183
- Paving operations for all permanent pavement
- Bridge deck for widening of existing bridges
    - Bridge 1 (Lakeline Mall Dr overpass)
    - Bridge 2 (RM 620 overpass)
    - Bridge 3 (Pecan Park Blvd overpass)
    - Bridge 4 (Lake Creek Pkwy overpass)
    - Bridge 5 (Anderson Mill Rd overpass)
    - Bridge 6 (Spicewood Springs/McNeil Rd overpass)
    - Bridge 7 (Oak Knoll Dr overpass)
    - Bridge 8 (Duval Rd overpass)
    - Bridge 9 (Balcones Woods Dr overpass)
    - Bridge 10(Braker Ln overpass)
    - Bridge 11 (Great Hills Trail overpass)
- Bridge deck for Bridge 12 within EARZ (new US 183 express lanes direct connector)
- Temporary pavement construction necessary to facilitate traffic control
- Reconfiguring and expanding existing permanent BMPs
- Construction of new permanent BMPs
- Drilled shaft foundations for sign, DMS, and toll gantry structures

This application, hereafter referred to as 183N Phase 2 Mod, involves modification of the previously approved 183N Phase 2 plan to allow implementation of subsurface Contech Jellyfish® Filter systems as permanent BMPs instead of surface batch detention ponds for treatment of runoff associated with subbasins 1A, 1B, 1C, 2A, 2B, 2C and 2D2 within the Lake Creek Watershed. Pond 2D1 will remain a surface batch detention pond with stacked detention as approved in 183N Phase 2 application. The existing underground sedimentation/filtration ponds associated with the subbasins mentioned above will be abandoned in place and filled with sand or flowable backfill and their inlets/outlets will be plugged. All other BMPs previously approved in the 183N Phase 2 application will remain unchanged. Acreage has not been added or removed from the approved plan nor has the acreage of impervious cover or % impervious cover changed.

1.2 GENERAL PROJECT DESCRIPTION

The Project extends generally from State Highway (SH) 45 North/Ranch-to-Market (RM) 620 to State Loop 1 (MoPac), approximately nine miles and along Loop 1 (MoPac) from US 183 to RM 2222, approximately three miles as shown in Figure 1.

The Scope generally consists of the construction of four express lanes (two in each direction) and widening of the existing United States Highway (US) 183 as required to bring the total number of general-purpose lanes to four in each direction as illustrated in Figure 2.

The proposed express lanes will be constructed in the center median of US 183. Each express lane will be 11-feet-wide. A four-foot-wide buffer will separate the express lanes from the general-purpose lanes. A concrete median barrier and four-foot-wide inside shoulders will separate express lane directions of travel.

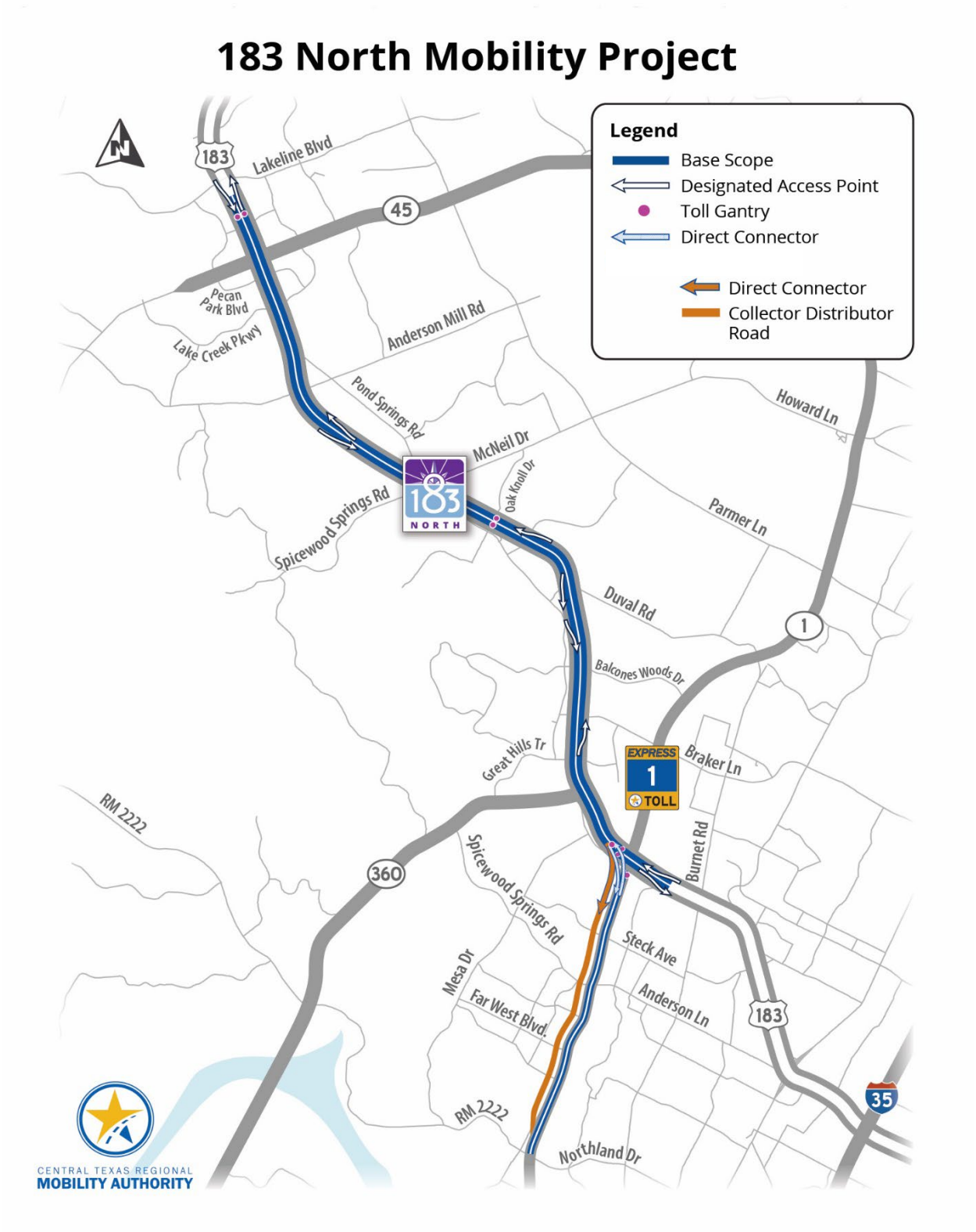

Figure 1: 183 North Mobility Project Map

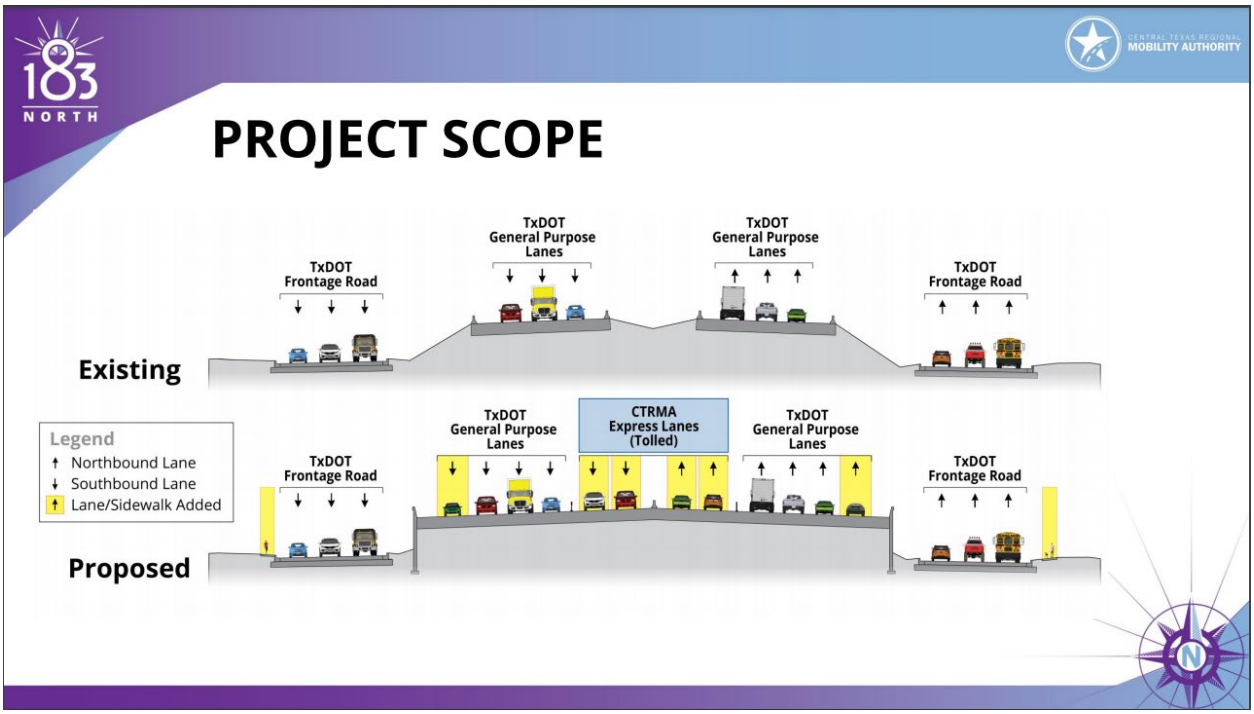

Figure 2 General Project Scope

Construction of a fourth (non-tolled) general-purpose lane, northbound and southbound, is proposed in those areas where only three general purpose lanes currently exist: northbound between Braker Lane and McNeil Drive/Spicewood Springs Road; southbound from approximately Lake Creek Parkway to the entrance ramp from SH 45; and southbound between one mile north of McNeil Drive/Spicewood Springs Road and MoPac. All general-purpose lanes and auxiliary lanes will be 11-feet-wide. In general, ten-foot-wide outside shoulders will be adjacent to the general-purpose lanes.

Other improvements include the addition of direct connector ramps providing access between the new express lanes on US 183 and the existing express lanes on MoPac, construction of an additional direct connector ramp from the new southbound US 183 express lanes to the Loop 1 general purpose lanes providing local access from southbound US 183 to Anderson Lane and Far West Blvd, ITS infrastructure to support tolling of the express lanes in addition to traffic management/incident management, a new shared-use path, new sidewalks, cross-street connections for bicycles/pedestrians along US 183, and other improvements and widening necessary to accommodate Project improvements.

Fourteen existing water quality ponds are situated within the Project right-of-way (ROW) and three existing water quality ponds are situated offsite for a total of seventeen existing water quality ponds. All existing water quality ponds are permitted by the TCEQ.

DBA requirements stipulate the Project shall achieve no net increase in TSS annual loading from 1987 baseline impervious cover (except for Rattan, Shoal, and Bull creeks) to Ultimate Design impervious cover. For the Rattan Creek watershed, GHC shall use the 1999 baseline impervious cover. For Shoal Creek and Bull Creek, GHC shall use the 1992 baseline impervious cover.

To achieve desired water quality treatment goals, existing water quality ponds will be expanded, and new water quality ponds and Jellyfish® Filter systems will be constructed. Existing and proposed permanent BMP locations are illustrated in Figure 3.

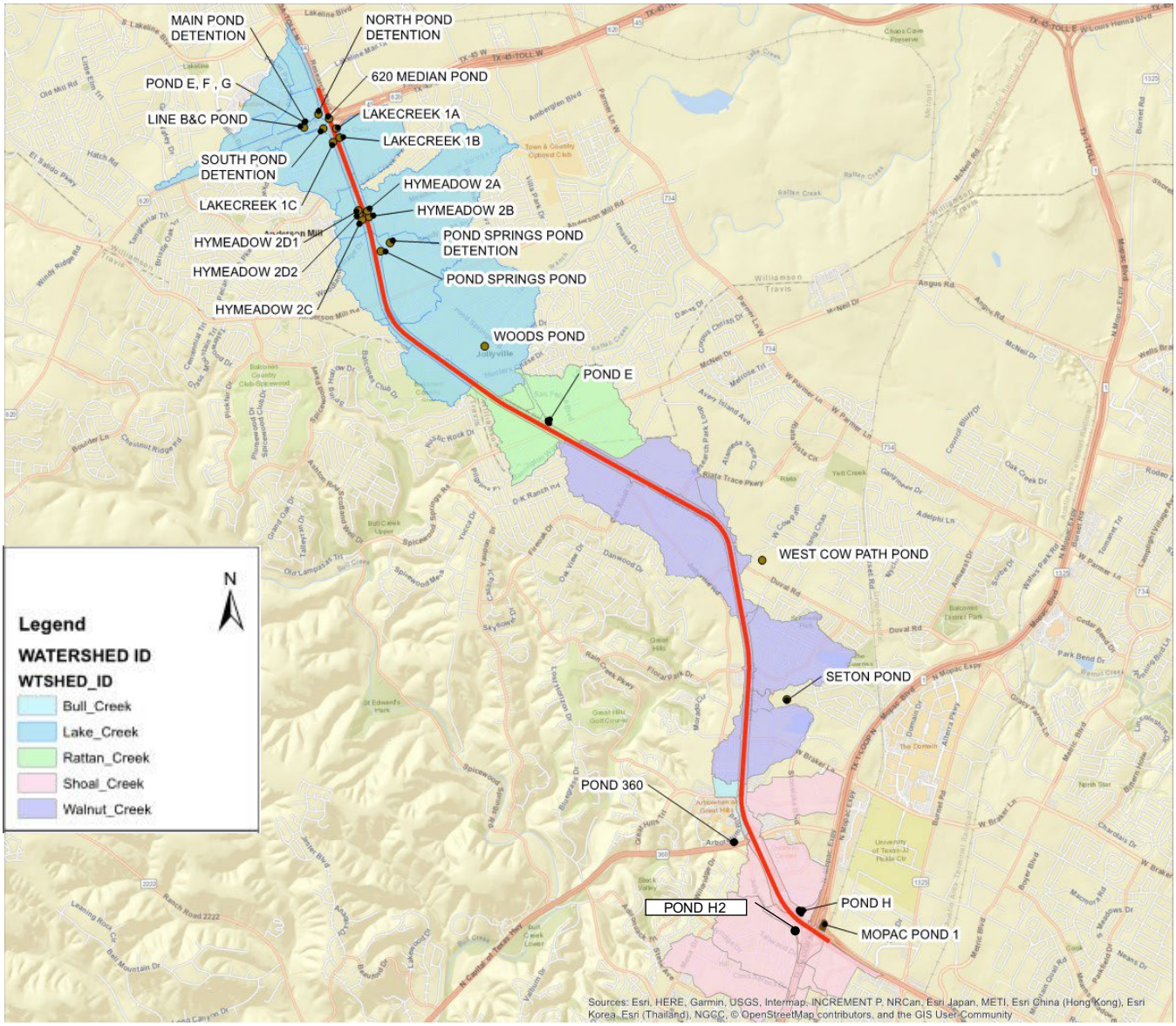

Figure 3 Existing and Proposed BMPs

Existing and proposed water quality ponds are listed in Table 1 including their existing and proposed configuration.

Water Quality BMP ID	Existing Configuration	Proposed Configuration
Line B and Line C Pond	Extended detention	No change
Pond E	Vertical gravel filter	No change
Pond F	Vertical gravel filter	No change
Pond G	Vertical gravel filter	No change
620 Median Pond	Surface Sedimentation-sand filtration	No change
Lake Creek 1A	Vault Sedimentation-sand filtration (pumped)	Jellyfish® Filter
Lake Creek 1B	Vault Sedimentation-sand filtration	Jellyfish® Filter
Lake Creek 1C	Vault Sedimentation-sand filtration	Jellyfish® Filter
Hymeadow Pond 2A	Vault Sedimentation-sand filtration (pumped)	Jellyfish® Filter
Hymeadow Pond 2B	Vault Sedimentation-sand filtration	Jellyfish® Filter
Hymeadow Pond 2C	Vault Sedimentation-sand filtration	Jellyfish® Filter
Hymeadow Pond 2D1	Vault Sedimentation-sand filtration	Surface batch detention
Hymeadow Pond 2D2	Vault Sedimentation-sand filtration	Jellyfish® Filter
Pond Springs Pond	Surface Sedimentation-sand filtration	Surface batch detention
Woods Pond	Wet pond	Wet pond
Pond E	New pond	Surface batch detention
West Cow Path	Surface Sedimentation-sand filtration	Surface batch detention
Seton Pond	Surface Sedimentation-sand filtration	Surface batch detention
Pond 360	New Pond	Surface batch detention
Pond H	New Pond	Surface batch detention

Table 1 Existing and Proposed Water Quality Ponds

1.3 COMPLETE SITE AREA

The 183 North Mobility Project complete site area encompasses 627.8 acres within TxDOT's right-of-way (ROW) including three existing off-site water quality/detention ponds as illustrated in Figure 4. All Project ROW has been acquired and is controlled by the MA for the duration of the Project. As illustrated in Figure 4, US 183 is divided into 3 segments 1A, 1B and 1C. The 3-mile segment along Loop 1 is referred to as Segment 2. The segments along US 183 align with major watersheds.

HORIZONTAL SCALE
0' 2000' 4000'

LEGEND

PROJECT ROW

PROJECT ROW WITHIN EARZ

PROJECT AREA WITHIN WILLIAMSON COUNTY:	184.0 ACRES
PROJECT AREA WITHIN TRAVIS COUNTY:	435.0 ACRES
TOTAL PROJECT AREA WITHIN WILLIAMSON AND TRAVIS COUNTIES:	619.0 ACRES
TOTAL PROJECT AREA WITHIN EARZ & EA TRANSITION ZONE:	445.0 ACRES

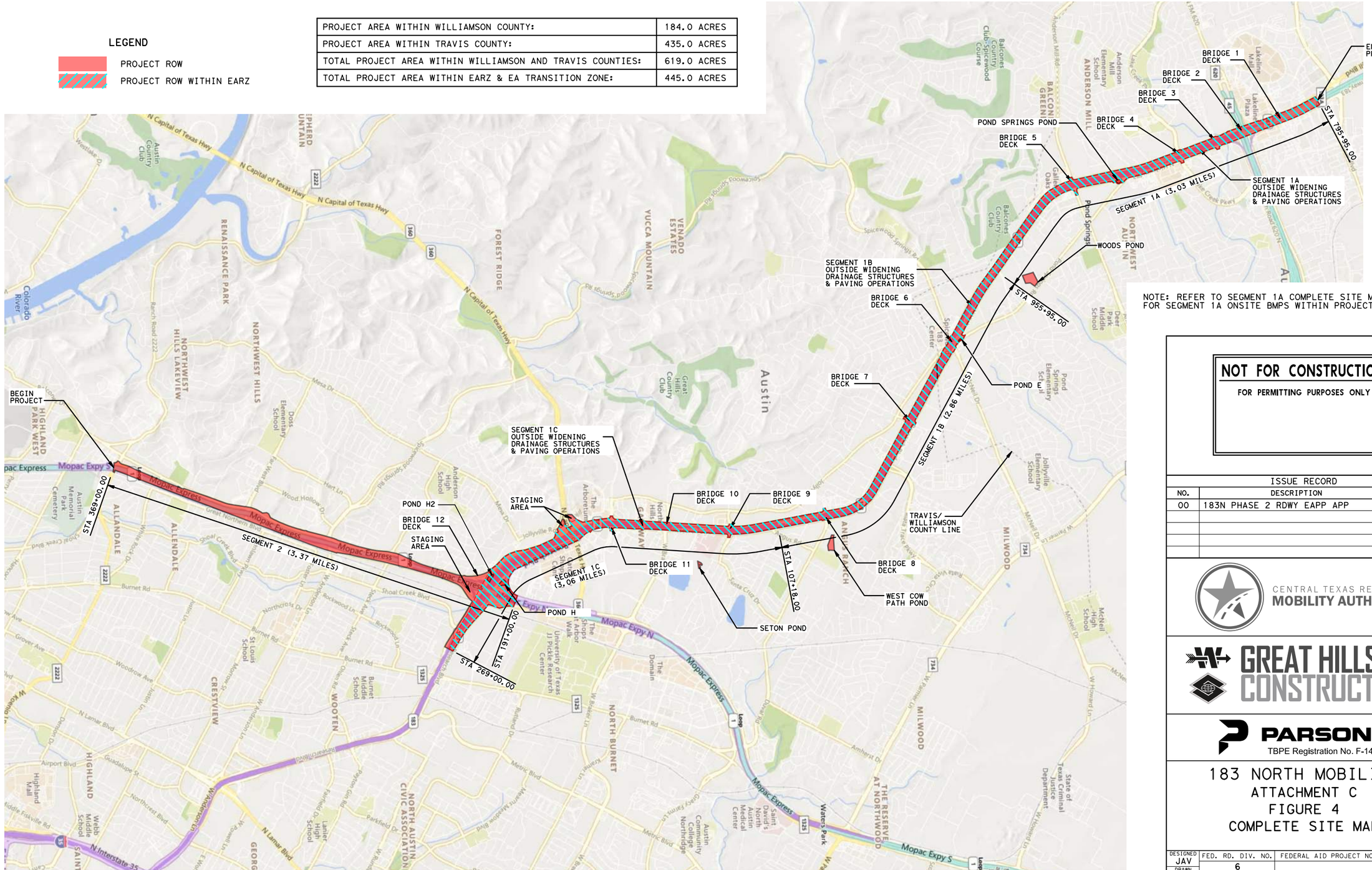

NOTE: REFER TO SEGMENT 1A COMPLETE SITE MAP DETAIL FOR SEGMENT 1A ONSITE BMPS WITHIN PROJECT ROW.

NOT FOR CONSTRUCTION

FOR PERMITTING PURPOSES ONLY

ISSUE RECORD

NO.	DESCRIPTION	DATE
00	183N PHASE 2 RDWY EAPP APP	20MAY22

CENTRAL TEXAS REGIONAL MOBILITY AUTHORITY

GREAT HILLS CONSTRUCTORS

PARSONS
TBPE Registration No. F-1481

183 NORTH MOBILITY
ATTACHMENT C
FIGURE 4
COMPLETE SITE MAP

DESIGNED	FED. RD. DIV. NO.	FEDERAL AID PROJECT NO.	HIGHWAY NO.
JAV	6		
DRAWN JAV	STATE / DISTRICT	COUNTY	DRAWING
CHECKED MF	TEXAS / AUSTIN	TRAVIS, WILLIAMSON	
APPROVED MF	CONTROL / SECTION	JOB	SHEET NO.
	0151 / 01	100	

User: p0097627 Date: 9/2/2022 Time: 4:04:19 PM Pen Table: 183N_Standard.tbl Plot Config: 183N PDF.pltcfg
File Name: ROW_EXHIBIT.dgn

Microsoft Bing
© 2022 Microsoft Corporation © 2022 TomTom

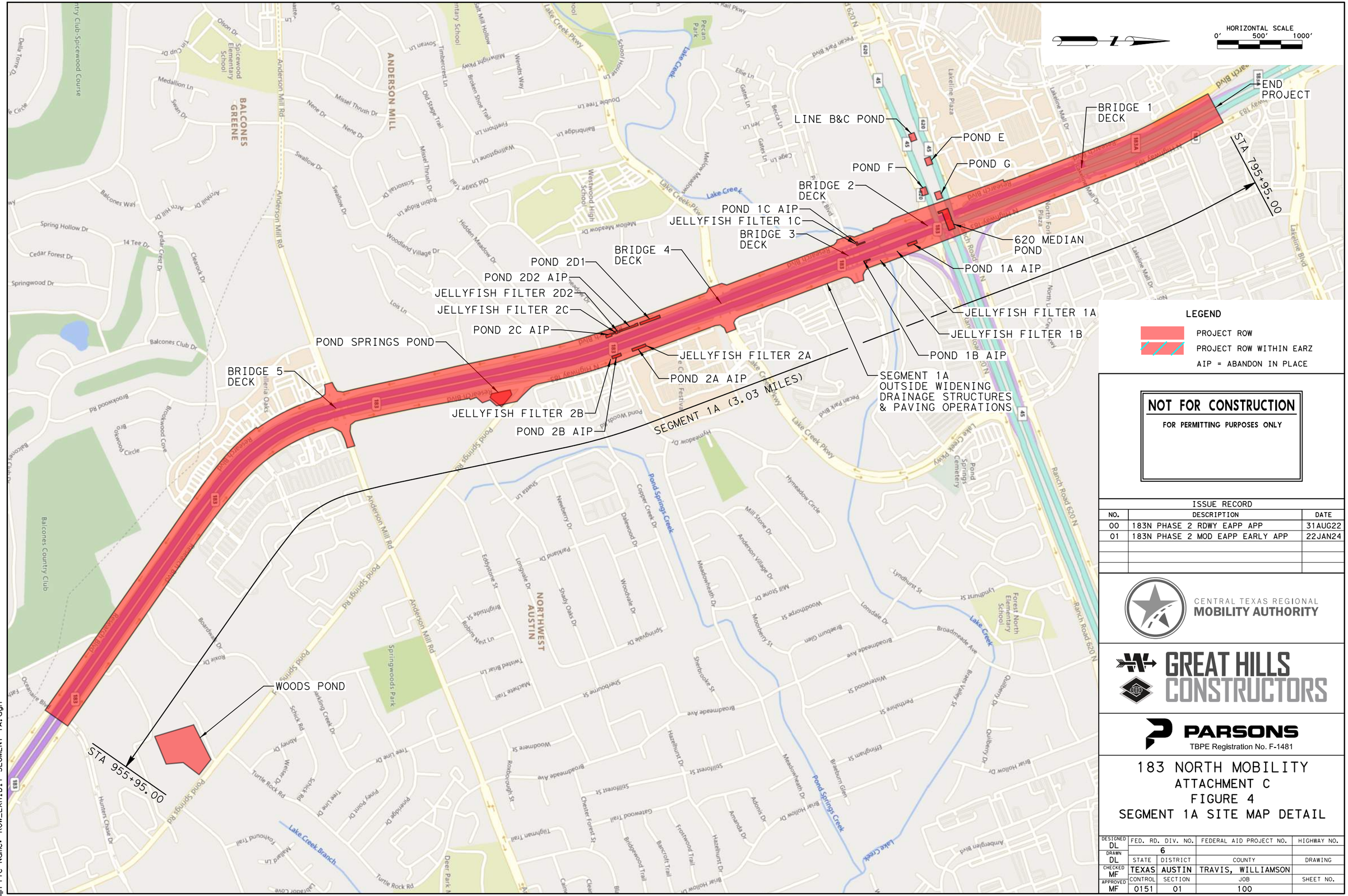

ISSUE RECORD		
NO.	DESCRIPTION	DATE
00	183N PHASE 2 RDWY EAPP APP	31AUG22
01	183N PHASE 2 MOD EAPP EARLY APP	22JAN24

CENTRAL TEXAS REGIONAL MOBILITY AUTHORITY

GREAT HILLS CONSTRUCTORS

PARSONS
TBPE Registration No. F-1481

183 NORTH MOBILITY
ATTACHMENT C
FIGURE 4
SEGMENT 1A SITE MAP DETAIL

DESIGNED	FED. RD. DIV. NO.	FEDERAL AID PROJECT NO.	HIGHWAY NO.
DL	6		
DRAWN	STATE	DISTRICT	COUNTY	DRAWING
DL	TEXAS	AUSTIN	TRAVIS, WILLIAMSON	
CHECKED	CONTROL	SECTION	JOB	SHEET NO.
MF	0151	01	100	
APPROVED				
MF				

File Name: ROW_EXHIBIT SEGMENT 1A.dgn User: p0097627 Date: 1/30/2024 Time: 6:38:26 AM Pen Table: 183N_Standard.tbl Plot Config: 183N PDF.pltcfg

Microsoft Bing

© 2024 Microsoft Corporation © 2024 TomTom

1.4 OFFSITE UPGRADIENT STORMWATER AREAS TO BE CAPTURED

Offsite upgradient stormwater areas that are captured by existing water quality ponds currently permitted by TCEQ will be captured in existing ponds to remain and existing ponds to be reconfigured and expanded. All other offsite upgradient stormwater areas will bypass the Project through existing cross culverts or existing closed drainage systems crossing the US 183 ROW.

1.5 IMPERVIOUS AREA

The Ultimate Design impervious cover area within the Project ROW is 439.8 acres including impervious cover both on top of and under bridges, overpasses, and underpasses per TCEQ policy. The pre-construction impervious cover for permanent works will increase from 66% to 74% due to construction activities performed under this 183N Phase 2 application. During 183N Phase 2, temporary asphaltic concrete pavement will be constructed to facilitate traffic control during construction causing a net increase in impervious cover of 0.30 acres. The temporary ramps sites will be utilized for approximately 18 months. The net increase in temporary impervious cover and associated net increase in TSS load for each temporary pavement site is tabulated below. Major drainage basin maps referenced in the table below are included with the 183N Phase 2 site plan.

Temporary Pavement for Traffic Control Location	Major Drainage Basin ID	Existing Permanent Permitted BMP ID	Net Increase Temporary Impervious Cover (acres)	Net Increase Annual TSS Load Produced (lbs.)
NB US 183 211+00 to 219+00	H	None	0.29	327
NB US 183 211+50 to 212+50	H	None	0..01	

1.6 PERMANENT BMPS

Of the seventeen existing water quality ponds shown in Table 1 above, twelve will be impacted by the Project.

Of the ponds impacted, nine existing water quality ponds are situated within the Project right-of-way (ROW) and three existing water quality ponds are situated offsite. All existing water quality ponds are sedimentation-filtration type except one which is a wet pond with detention.

Seven existing water quality ponds within the Project ROW will be abandoned in place and replaced with subsurface Jellyfish® Filter systems. One existing water quality pond within the Project ROW will be reconfigured to function as a batch detention pond with stacked detention. Two existing off-site water

quality ponds will be reconfigured to function as batch detention with stacked detention for hydraulic attenuation. One existing off-site water quality pond, Woods Pond, will be improved to function as a wet pond with stacked detention. Three new water quality ponds will be constructed to function as batch detention ponds.

All existing water quality ponds shall remain operational for the duration of construction activities performed under this 183N Phase 2 Mod application. Reconfigured ponds and new Jellyfish® Filter BMPs will be constructed using a phased approach to allow uninterrupted treatment of stormwater up until each pond is fully functional as a batch detention pond or cartridge filter system.

1.7 PROPOSED SITE USE

The project site use will remain unchanged after the Ultimate Design has been implemented. Pre-project, the site accommodates a non-tolled six lane freeway with four service roads lanes. Post project, the site will accommodate four express lanes, eight general purpose freeway lanes, and four service road lanes.

1.8 EXISTING ROADWAY

All existing roadways within the Project ROW are paved. The existing services roads and cross streets are composed of asphalt concrete pavement. Existing general purposed freeway lanes and ramp are composed of concrete pavement. Except for pavement and bridge deck removals needed to facilitate outside widening, all existing roadways will remain undisturbed and operational for the duration of construction activities performed under this 183N Phase 2 application.

1.9 STRUCTURES TO BE DEMOLISHED

No major structures will be demolished for the duration of construction activities performed under this 183N Phase 2 application. Existing pavement along the outside widening will be removed to facilitate construction of new permanent pavement. Bridge deck will be removed to facilitate bridge widening at all existing overpass structures. Other removal activities include removal of existing light foundations, removal of existing traffic barrier, removal of existing sign structures, removal of existing drainage inlets and storm sewer, and removal of portions of existing retaining wall.

1.10 MAJOR INTERIM PHASES

The Project will be constructed in two major phases of work. Phase 1 construction involves widening within the existing median to construct managed lanes, utility adjustments, constructing continuous sidewalk, and reconstructing driveways. Phase 2 construction involves outside widening to accommodate a fourth continuous general-purpose lane along US 183, construction of new permanent BMPs, and reconfiguring existing BMPs to function as batch detention ponds.

GHC has submitted multiple EAPP Roadway applications for specific elements of work to be completed within the major phases of construction. Following are EAPP roadway applications that were submitted for the 183 North Mobility Project and approved by TCEQ.

Scope of Planned and Approved EAPP Roadway Applications	
183N Phase 1-1	Temporary median access, NGCS, and bridge substructure for bridges 8, 9, 10, and 11. Approved by TCEQ March 11, 2022
183N Phase 1-2	Earthwork for median widening, new sidewalk, utility adjustments, storm sewer and inlet structures for median widening within Seg 1A, 1B and 1C, bridge substructure for bridge 1, 2, 3, 4, 5, 6, 7, and 12. Approved by TCEQ July 1, 2022.
183N Phase 2	Earthwork for outside widening, storm sewer and inlet structures for outside widening within Seg 1A, 1B and 1C, bridge deck for bridges 1, 2, 3, 4, 5, 6, 7, 8, 9, 10, 11 and 12, reconfiguring existing permanent BMPs, construction of new permanent BMPs, retaining wall, and paving operations for all permanent pavements. Approved by TCEQ September 30, 2023
183N Phase 2 Mod	Includes all activities associated with 183N Phase 2 above, plus construction of new Jellyfish® Filter systems to treat runoff from subbasins 1A, 1B, 1C, 2A, 2B, 2C and 2D2 within Lake Creek watershed. Abandon in place existing subsurface sedimentation-filtration ponds by plugging existing inlets/outlets and filling ponds with flowable backfill or sand. This work will be done concurrently with the work elements previously approved in 183N Phase 2. (current application)

ATTACHMENT D – FACTORS AFFECTING SURFACE WATER QUALITY

1.1 GENERAL

The factors affecting surface water quality are influenced by the type of construction activities that are undertaken as the Project is being built. As previously mentioned in Attachment C, the Project scope generally consists of the construction of four express lanes (two in each direction) and widening of the existing United States Highway (US) 183 as required to bring the total number of general-purpose lanes to four in each direction.

Other improvements include the addition of direct connector ramps providing access between the new express lanes on US 183 and the existing express lanes on MoPac, construction of an additional direct connector ramp from the new southbound US 183 express lanes to the Loop 1 general purpose lanes providing local access from southbound US 183 to Anderson Lane and Far West Blvd, ITS infrastructure to support tolling of the express lanes in addition to traffic management/incident management, a new shared-use path, new sidewalks, cross-street connections for bicycles/pedestrians along US 183, and other improvements and widening necessary to accommodate Project improvements.

1.2 183N PHASE 2 CONSTRUCTION ACTIVITIES

Construction activities related to 183N Phase 2 Mod EAPP Roadway application involve removal of existing pavement adjacent to the outside widening to facilitate construction of permanent pavement in this phase, removal of sign structure foundations, removal of existing traffic barrier, removal of existing drainage inlets and storm sewer, excavation for retaining wall, placement of select fill material, installation of proposed storm sewer and inlet structures for the outside widening, reconfiguring existing water quality ponds to function as batch detention ponds, constructing new batch detention ponds and new jellyfish filter systems, drilled shaft foundations for sign, DMS, and toll gantry structures, and placing concrete for bridge decks and all permanent pavement.

1.3 FACTORS AFFECTING SURFACE WATER QUALITY

Based on the 183N Phase 2 Mod construction activities identified above, factors that could affect surface water quality include those presented below in Table 2.

183N PHASE 2 Construction Site Pollutants										
		Other Pollutants								
Construction Activity	Primary Pollutant: Sediment	Nutrients	Heavy metals	pH (acids & bases)	Pesticides & herbicides	Oil & grease	Bacteria & viruses	Trash, debris, solids	Other toxic chemicals
Clearing, grading, excavating, and unstabilized areas	✓							✓	
Concrete washout and waste			✓	✓				✓	
Structure construction		✓		✓				✓	✓
Demolition and debris disposal	✓							✓	
Dewatering operations	✓	✓							
Material delivery and storage	✓	✓	✓	✓	✓	✓		✓	✓
Material use during building process		✓	✓	✓	✓	✓		✓	✓
Solid waste (trash and debris)								✓	✓
Contaminated spills		✓	✓	✓	✓	✓			✓
Sanitary/septic waste		✓		✓			✓		✓
Vehicle/equipment fueling and maintenance						✓			✓
Vehicle/equipment use and storage						✓			✓

Table 2 Factor Affecting Surface Water Quality

183N PHASE 2 MOD SITE PLAN

1.1 GENERAL

Site plans are provided on the following pages for the elements included in this 183N Phase 2 Mod application restated below.

- Construction of new permanent Jellyfish® Filter systems
- Abandonment of existing subsurface sedimentation-filtration vaults

Site plans for the following elements to be constructed concurrently with elements included in this 183N Phase 2 Mod application are found in the 183N Phase 2 application.

- Outside widening of US 183 general purpose lanes including embankment and retaining wall
- Storm sewer and inlet structures for outside widening of US 183
- Paving operations for all permanent pavement
- Bridge deck for widening of existing bridges
    - Bridge 1 (Lakeline Mall Dr overpass)
    - Bridge 2 (RM 620 overpass)
    - Bridge 3 (Pecan Park Blvd overpass)
    - Bridge 4 (Lake Creek Pkwy overpass)
    - Bridge 5 (Anderson Mill Rd overpass)
    - Bridge 6 (Spicewood Springs/McNeil Rd overpass)
    - Bridge 7 (Oak Knoll Dr overpass)
    - Bridge 8 (Duval Rd overpass)
    - Bridge 9 (Balcones Woods Dr overpass)
    - Bridge 10(Braker Ln overpass)
    - Bridge 11 (Great Hills Trail overpass)
- Bridge deck for Bridge 12 within EARZ (new US 183 express lanes direct connector)
- Temporary pavement construction necessary to facilitate traffic control
- Reconfiguring and expanding existing permanent BMPs
- Construction of new permanent BMPs
- Drilled shaft foundations for sign, DMS, and toll gantry structures

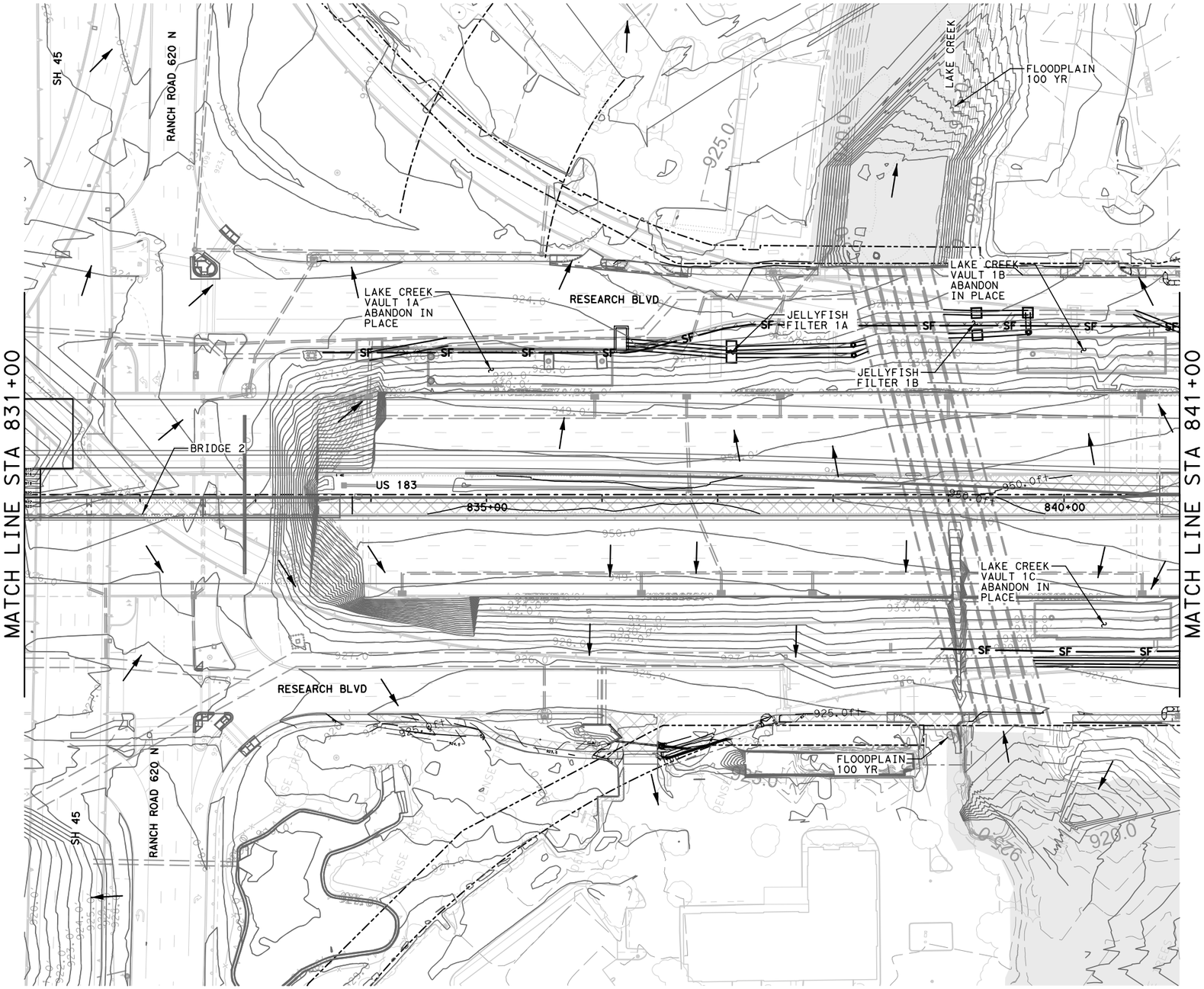

HORIZONTAL SCALE
0' 50' 100'

LEGEND

- SURFACE FLOW DIRECTION
- EXISTING DRAINAGE
- DRAINAGE INSTALLED DURING PH 1
- PROPOSED DRAINAGE
- DRAINAGE DITCH
- TREE PROTECTION
- ROCK FILTER DAM
- SF — SILT FENCE
- SILT FENCE INLET PROTECTION
- GRAVEL BAG INLET PROTECTION
- SF — SILT FENCE, INSTALLED IN PH 1
- SILT FENCE INLET PROTECTION, INSTALLED IN PH 1
- GRAVEL BAG INLET PROTECTION, INSTALLED IN PH 1
- DISTURBED AREA ROADWAY THIS PHASE
- BRIDGE DECK THIS PHASE
- DISTURBED AREA PREVIOUS PHASE
- ROW — CONTROL OF ACCESS
- TEMPORARY CONSTRUCTION EASEMENT

NOT FOR CONSTRUCTION

FOR PERMITTING PURPOSES ONLY

NOTE:
PHASE 1 BMP'S TO REMAIN IN PLACE UNTIL COMPLETION OF PAVEMENT UPSTREAM OF THE BMP.

NOTE:
FOR WATER QUALITY BASINS UNDER CONTRUCTION. BASIN OUTFALL WILL BE CLOSED AND THE BASIN WILL BE DEWATERED AS NEEDED. WATER TO BE PUMPED THROUGH DEWATERING BAGS TO ESURE REMOVAL OF SEDIMENT.

ISSUE RECORD

NO.	DESCRIPTION	DATE
00	183N PHASE 2 RDWY EAPP APP	20MAY22
01	183N PHASE 2 MOD RDWY EAPP APP	22JAN24

CENTRAL TEXAS REGIONAL MOBILITY AUTHORITY

GREAT HILLS CONSTRUCTORS

PARSONS
TBPE Registration No. F-1481

183 NORTH MOBILITY
SEGMENT 1A
EAPP SITE PLAN
183N PHASE 2 MOD
STA 831+00 TO STA 841+00

DESIGNED	FED. RD. DIV. NO.		FEDERAL AID PROJECT NO.	HIGHWAY NO.
	6			US 183
DRAWN DL	STATE	DISTRICT	COUNTY	DRAWING
CHECKED MF	TEXAS	AUSTIN	TRAVIS, WILLIAMSON	1ASWP205
APPROVED MF	CONTROL	SECTION	JOB	SHEET NO.
	0151	06	143	

User: p002845B Date: 1/29/2024 Time: 5:32:38 PM Pen Table: 183N_Standard.tbl Plot Config: 183N PDF.pltcfg
File Name: 1A-SWP2-05.dgn

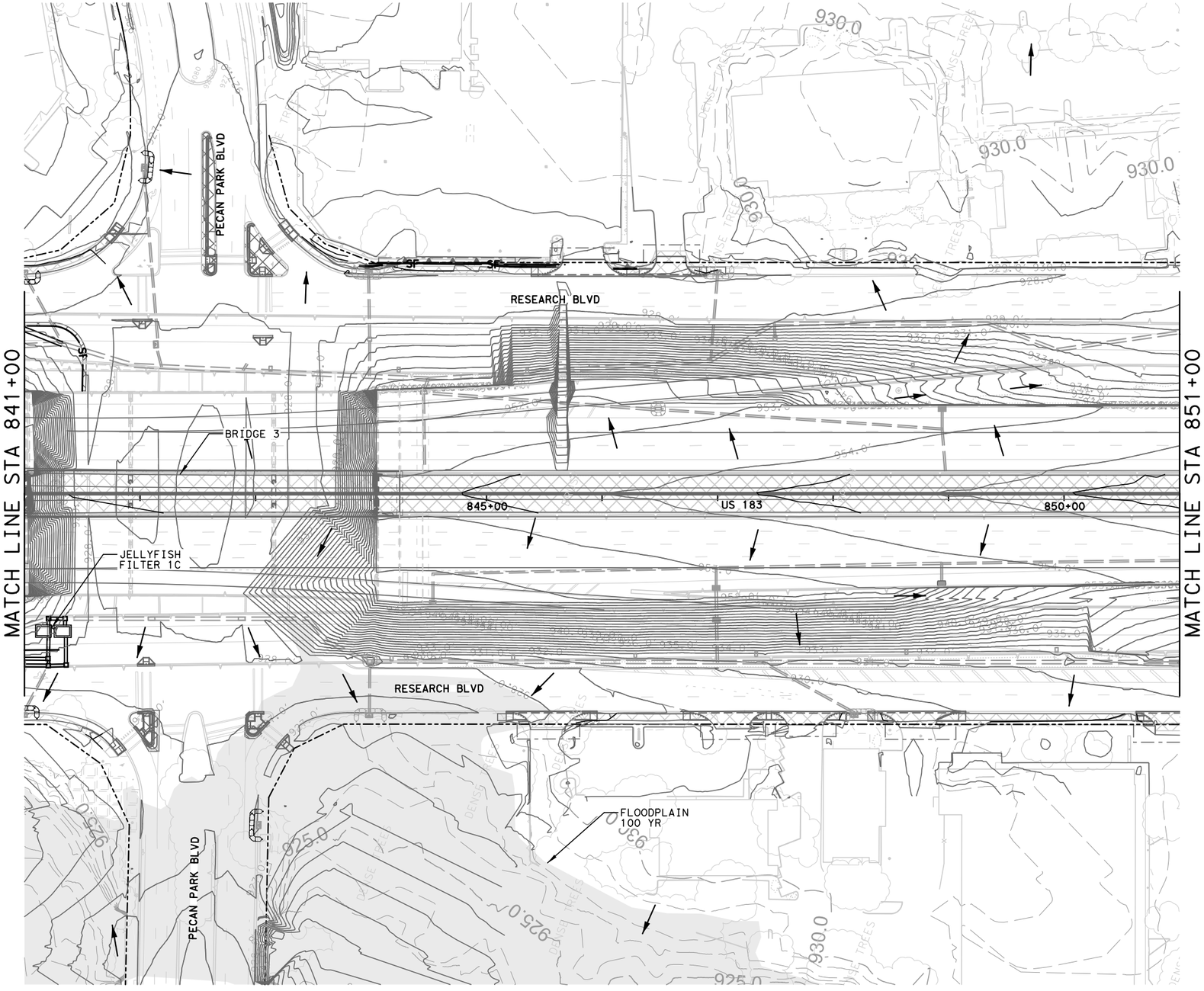

NOTE:
PHASE 1 BMP'S TO REMAIN IN PLACE UNTIL COMPLETION OF PAVEMENT UPSTREAM OF THE BMP.

HORIZONTAL SCALE
0' 50' 100'

LEGEND

- SURFACE FLOW DIRECTION
- EXISTING DRAINAGE
- DRAINAGE INSTALLED DURING PH 1
- PROPOSED DRAINAGE
- DRAINAGE DITCH
- TREE PROTECTION
- ROCK FILTER DAM
- SF — SILT FENCE
- SILT FENCE INLET PROTECTION
- GRAVEL BAG INLET PROTECTION
- SF — SILT FENCE, INSTALLED IN PH 1
- SILT FENCE INLET PROTECTION, INSTALLED IN PH 1
- GRAVEL BAG INLET PROTECTION, INSTALLED IN PH 1
- DISTURBED AREA ROADWAY THIS PHASE
- BRIDGE DECK THIS PHASE
- DISTURBED AREA PREVIOUS PHASE
- ROW — CONTROL OF ACCESS
- TEMPORARY CONSTRUCTION EASEMENT

NOT FOR CONSTRUCTION

FOR PERMITTING PURPOSES ONLY

ISSUE RECORD

NO.	DESCRIPTION	DATE
00	183N PHASE 2 RDWY EAPP APP	20MAY22
01	183N PHASE 2 MOD RDWY EAPP APP	22JAN24

CENTRAL TEXAS REGIONAL MOBILITY AUTHORITY

GREAT HILLS CONSTRUCTORS

PARSONS
TBPE Registration No. F-1481

183 NORTH MOBILITY
SEGMENT 1A
EAPP SITE PLAN
183N PHASE 2 MOD
STA 841+00 TO STA 851+00

DESIGNED	FED. RD. DIV. NO.		FEDERAL AID PROJECT NO.	HIGHWAY NO.
DRAWN DL	6			US 183
	STATE	DISTRICT	COUNTY	DRAWING
CHECKED MF	TEXAS	AUSTIN	TRAVIS, WILLIAMSON	1ASWP206
APPROVED MF	CONTROL	SECTION	JOB	SHEET NO.
	0151	06	143	

User: p002845B Date: 1/29/2024 Time: 6:30:14 PM Pen Table: 183N_Standard.tbl Plot Config: 183N PDF.pltcfg
File Name: 1A-SWP2-06.dgn

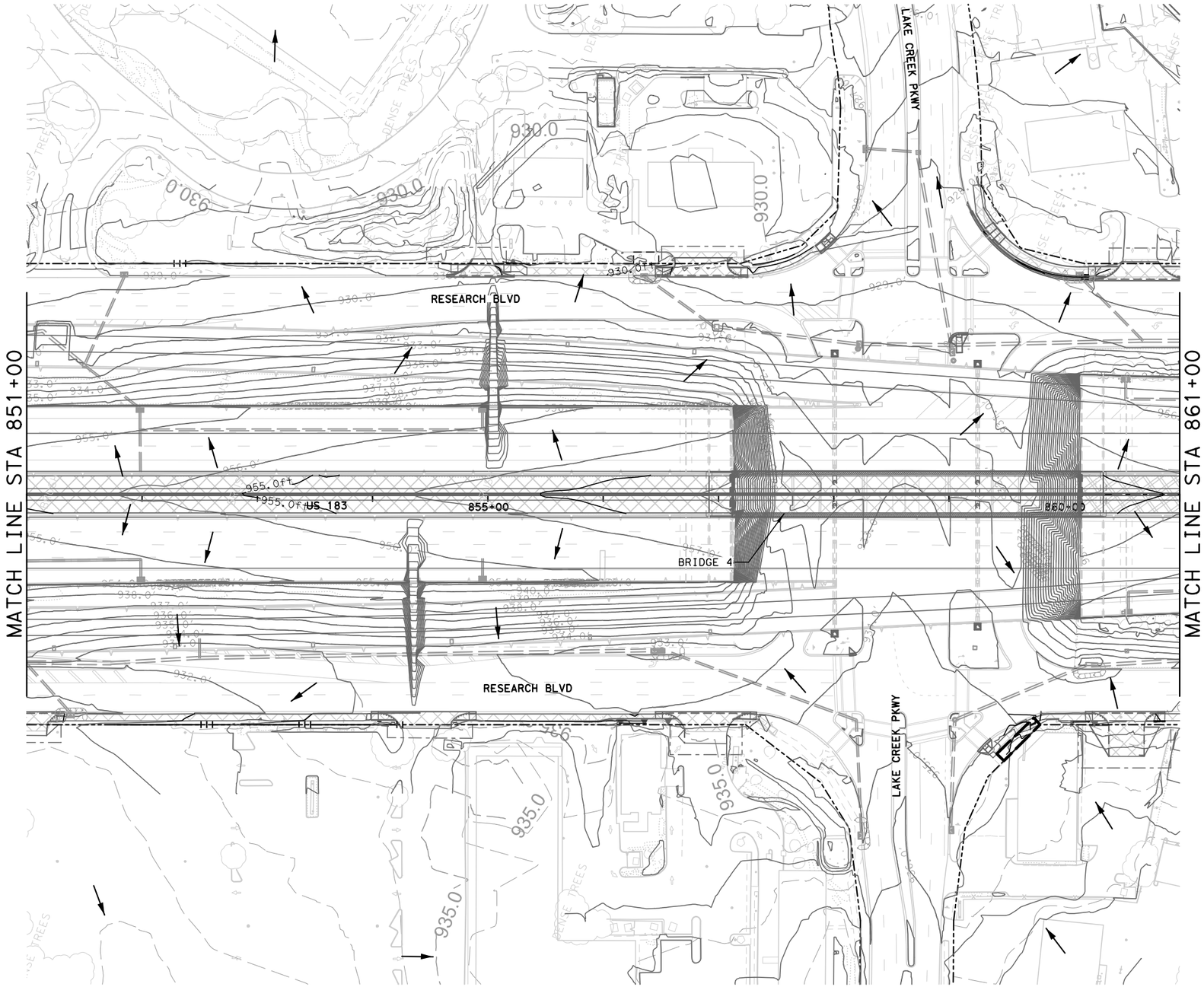

HORIZONTAL SCALE
0' 50' 100'

LEGEND

- SURFACE FLOW DIRECTION
- EXISTING DRAINAGE
- DRAINAGE INSTALLED DURING PH 1
- PROPOSED DRAINAGE
- DRAINAGE DITCH
- TREE PROTECTION
- ROCK FILTER DAM
- SF — SILT FENCE
- SILT FENCE INLET PROTECTION
- GRAVEL BAG INLET PROTECTION
- SF — SILT FENCE, INSTALLED IN PH 1
- SILT FENCE INLET PROTECTION, INSTALLED IN PH 1
- GRAVEL BAG INLET PROTECTION, INSTALLED IN PH 1
- DISTURBED AREA ROADWAY THIS PHASE
- BRIDGE DECK THIS PHASE
- DISTURBED AREA PREVIOUS PHASE
- ROW — CONTROL OF ACCESS
- TEMPORARY CONSTRUCTION EASEMENT

NOT FOR CONSTRUCTION

FOR PERMITTING PURPOSES ONLY

ISSUE RECORD

NO.	DESCRIPTION	DATE
00	183N PHASE 2 RDWY EAPP APP	20MAY22
01	183N PHASE 2 MOD RDWY EAPP APP	22JAN24

CENTRAL TEXAS REGIONAL MOBILITY AUTHORITY

GREAT HILLS CONSTRUCTORS

PARSONS
TBPE Registration No. F-1481

183 NORTH MOBILITY
SEGMENT 1A
EAPP SITE PLAN
183N PHASE 2 MOD
STA 851+00 TO STA 861+00

DESIGNED	FED. RD. DIV. NO.		FEDERAL AID PROJECT NO.	HIGHWAY NO.
	6			US 183
DRAWN DL	STATE	DISTRICT	COUNTY	DRAWING
CHECKED MF	TEXAS	AUSTIN	TRAVIS, WILLIAMSON	1ASWP207
APPROVED MF	CONTROL	SECTION	JOB	SHEET NO.
	0151	06	143	

NOTE:
PHASE 1 BMP'S TO REMAIN IN PLACE UNTIL COMPLETION OF PAVEMENT UPSTREAM OF THE BMP.

User: p002845B Date: 1/29/2024 Time: 9:15:30 PM Pen Table: 183N_Standard.tbl Plot Config: 183N PDF.pltcfg
File Name: 1A-SWP2-07.dgn

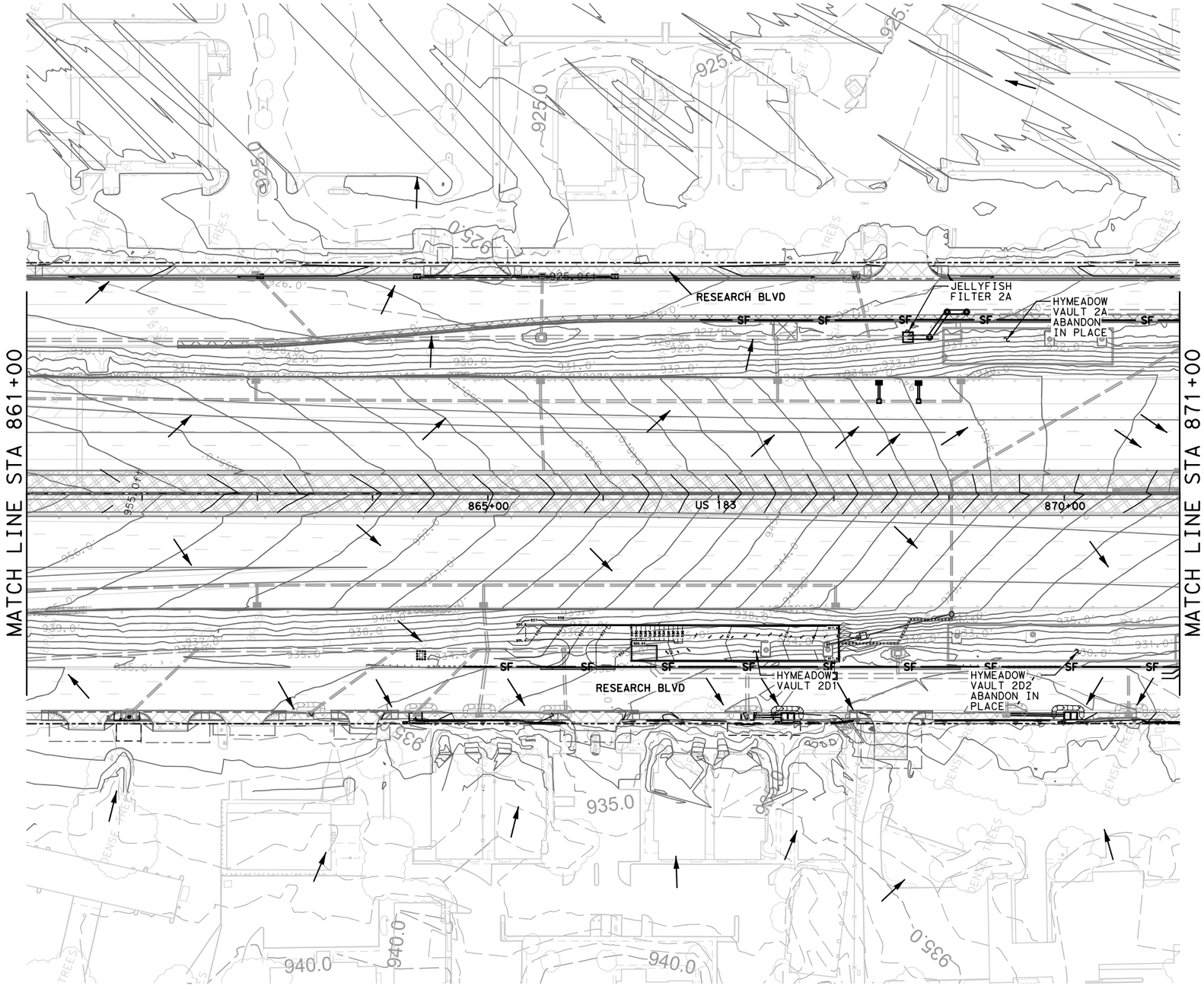

NOTE:
PHASE 1 BMP'S TO REMAIN IN PLACE UNTIL COMPLETION OF PAVEMENT UPSTREAM OF THE BMP.

NOTE:
FOR WATER QUALITY BASINS UNDER CONTRUCTION. BASIN OUTFALL WILL BE CLOSED AND THE BASIN WILL BE DEWATERED AS NEEDED. WATER TO BE PUMPED THROUGH DEWATERING BAGS TO ESURE REMOVAL OF SEDIMENT.

HORIZONTAL SCALE
0' 50' 100'

LEGEND

- SURFACE FLOW DIRECTION
- EXISTING DRAINAGE
- DRAINAGE INSTALLED DURING PH 1
- PROPOSED DRAINAGE
- DRAINAGE DITCH
- TREE PROTECTION
- ROCK FILTER DAM
- SILT FENCE
- SILT FENCE INLET PROTECTION
- GRAVEL BAG INLET PROTECTION
- SILT FENCE, INSTALLED IN PH 1
- SILT FENCE INLET PROTECTION, INSTALLED IN PH 1
- GRAVEL BAG INLET PROTECTION, INSTALLED IN PH 1
- DISTURBED AREA ROADWAY THIS PHASE
- BRIDGE DECK THIS PHASE
- DISTURBED AREA PREVIOUS PHASE
- ROW
- CONTROL OF ACCESS
- TEMPORARY CONSTRUCTION EASEMENT

NOT FOR CONSTRUCTION

FOR PERMITTING PURPOSES ONLY

ISSUE RECORD

NO.	DESCRIPTION	DATE
00	183N PHASE 2 RDWY EAPP APP	20MAY22
01	183N PHASE 2 MOD RDWY EAPP APP	22JAN24

CENTRAL TEXAS REGIONAL MOBILITY AUTHORITY

GREAT HILLS CONSTRUCTORS

PARSONS
TBPE Registration No. F-1481

183 NORTH MOBILITY
SEGMENT 1A
EAPP SITE PLAN
183N PHASE 2 MOD
STA 861+00 TO STA 871+00

DESIGNED	FED. RD. DIV. NO.		FEDERAL AID PROJECT NO.	HIGHWAY NO.
DRAWN DL	6			US 183
	STATE	DISTRICT	COUNTY	DRAWING
CHECKED MF	TEXAS	AUSTIN	TRAVIS, WILLIAMSON	1ASWP208
APPROVED MF	CONTROL	SECTION	JOB	SHEET NO.
	0151	06	143	

User: p002845B Date: 1/29/2024 Time: 6:56:05 PM Pen Table: 183N_Standard.tbl Plot Config: 183N PDF.pltcfg
File Name: 1A-SWP2-08.dgn

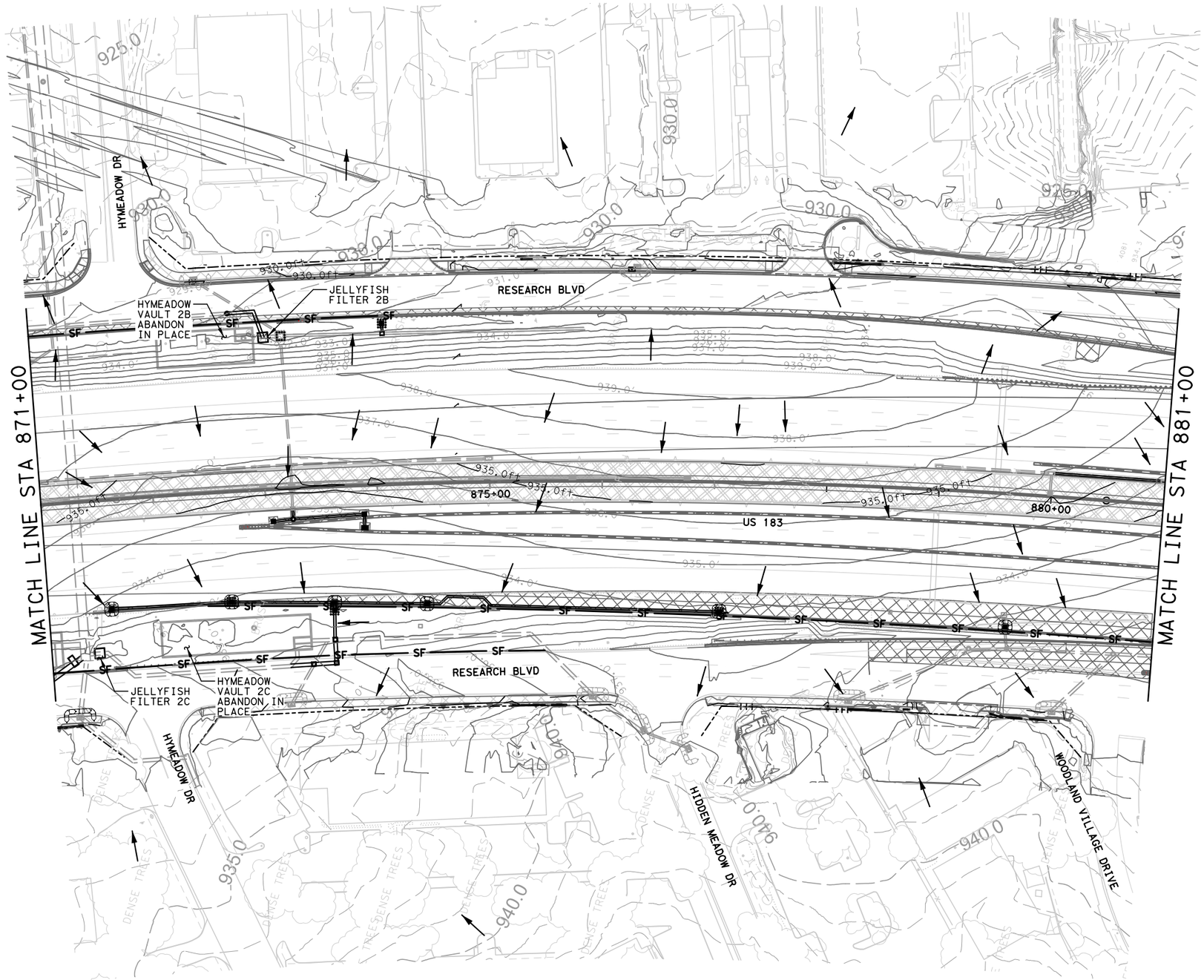

HORIZONTAL SCALE
0' 50' 100'

LEGEND

- SURFACE FLOW DIRECTION
- EXISTING DRAINAGE
- DRAINAGE INSTALLED DURING PH 1
- PROPOSED DRAINAGE
- DRAINAGE DITCH
- TREE PROTECTION
- ROCK FILTER DAM
- SILT FENCE
- SILT FENCE INLET PROTECTION
- GRAVEL BAG INLET PROTECTION
- SILT FENCE, INSTALLED IN PH 1
- SILT FENCE INLET PROTECTION, INSTALLED IN PH 1
- GRAVEL BAG INLET PROTECTION, INSTALLED IN PH 1
- DISTURBED AREA ROADWAY THIS PHASE
- BRIDGE DECK THIS PHASE
- DISTURBED AREA PREVIOUS PHASE
- ROW
- CONTROL OF ACCESS
- TEMPORARY CONSTRUCTION EASEMENT

NOT FOR CONSTRUCTION

FOR PERMITTING PURPOSES ONLY

NOTE:
PHASE 1 BMP'S TO REMAIN IN PLACE UNTIL COMPLETION OF PAVEMENT UPSTREAM OF THE BMP.

NOTE:
FOR WATER QUALITY BASINS UNDER CONTRUCTION. BASIN OUTFALL WILL BE CLOSED AND THE BASIN WILL BE DEWATERED AS NEEDED. WATER TO BE PUMPED THROUGH DEWATERING BAGS TO ESURE REMOVAL OF SEDIMENT.

ISSUE RECORD		
NO.	DESCRIPTION	DATE
00	183N PHASE 2 RDWY EAPP APP	20MAY22
01	183N PHASE 2 MOD RDWY EAPP APP	22JAN24

CENTRAL TEXAS REGIONAL MOBILITY AUTHORITY

GREAT HILLS CONSTRUCTORS

PARSONS
TBPE Registration No. F-1481

183 NORTH MOBILITY
SEGMENT 1A
EAPP SITE PLAN
183N PHASE 2 MOD
STA 871+00 TO STA 881+00

DESIGNED	FED. RD. DIV. NO.	FEDERAL AID PROJECT NO.	HIGHWAY NO.
	6		US 183
DRAWN DL	STATE / DISTRICT	COUNTY	DRAWING
CHECKED MF	TEXAS / AUSTIN	TRAVIS, WILLIAMSON	1ASWP209
APPROVED MF	CONTROL / SECTION	JOB	SHEET NO.
	0151 / 06	143	

User: p002845B Date: 1/29/2024 Time: 9:11:33 PM Pen Table: 183N_Standard.tbl Plot Config: 183N PDF.pltcfg
File Name: 1A-SWP2-09.dgn

MAJOR DRAINAGE BASIN MAPS A THROUGH H

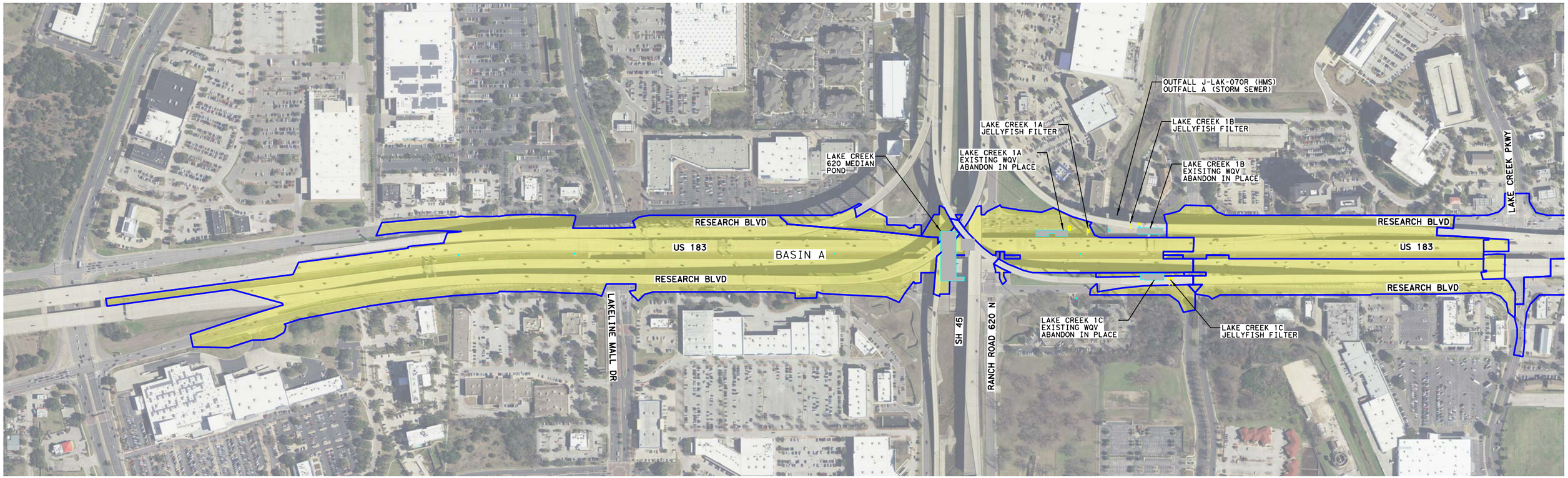

MAJOR DRAINAGE BASIN MAPS A THROUGH H

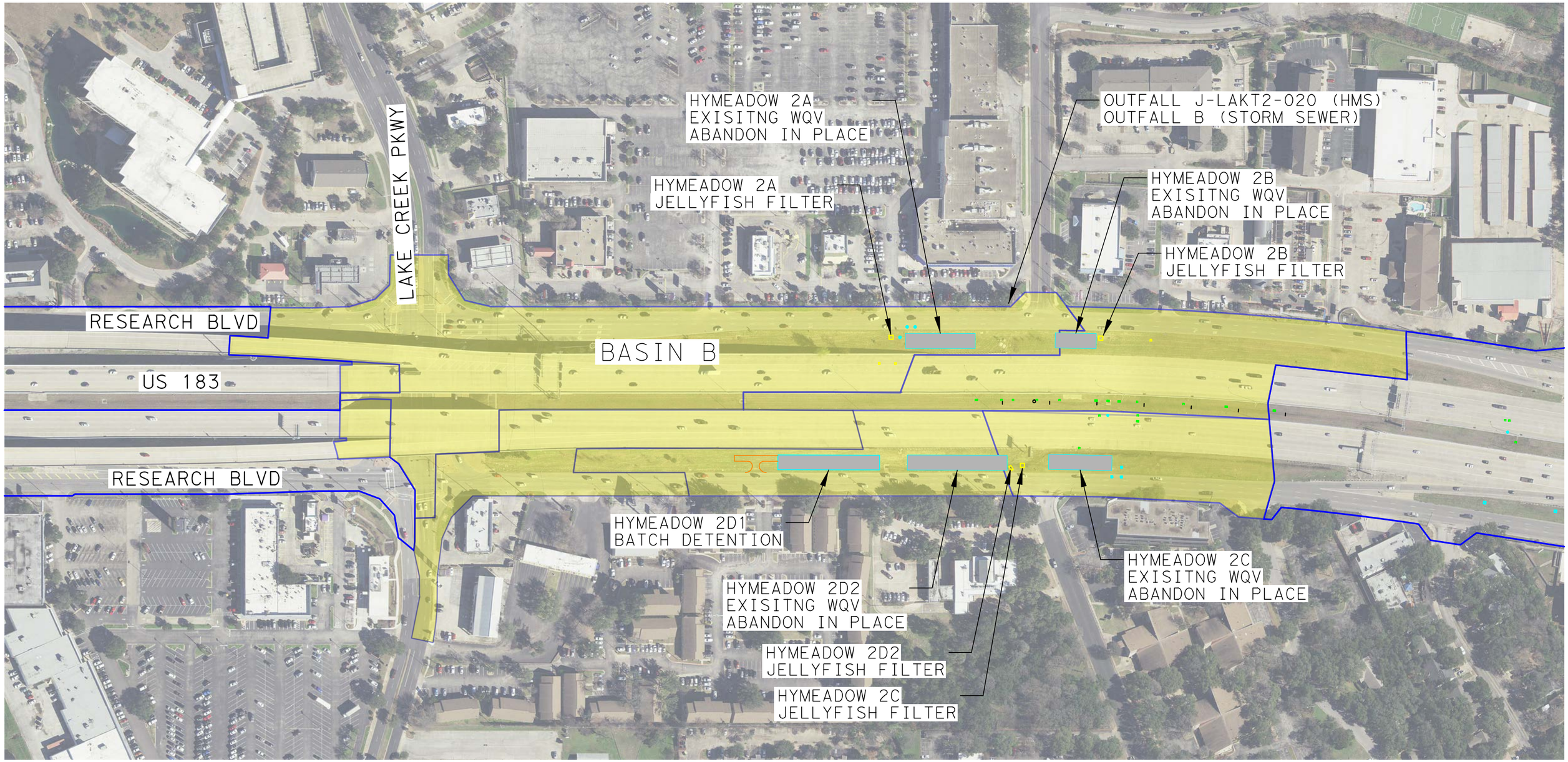

MAJOR DRAINAGE BASIN MAPS A THROUGH H

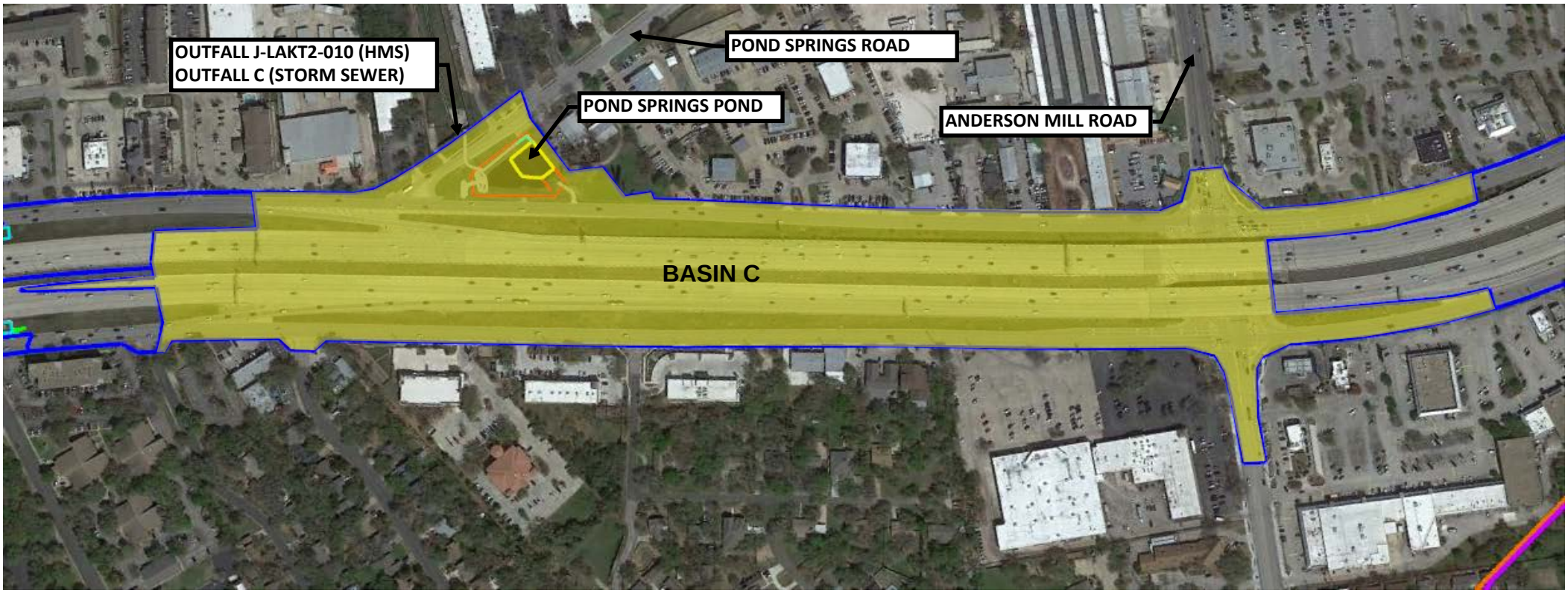

MAJOR DRAINAGE BASIN MAPS A THROUGH H

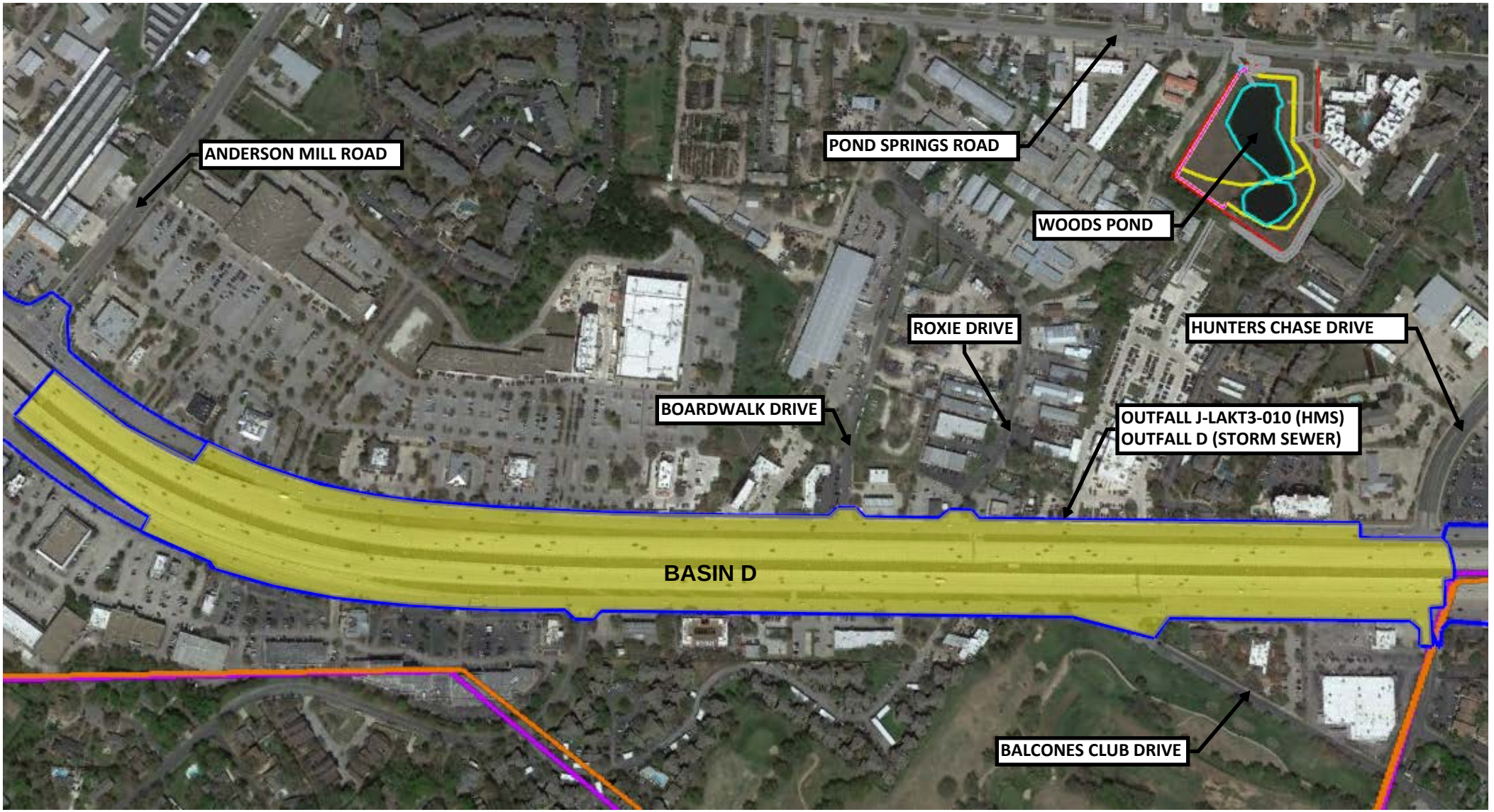

MAJOR DRAINAGE BASIN MAPS A THROUGH H

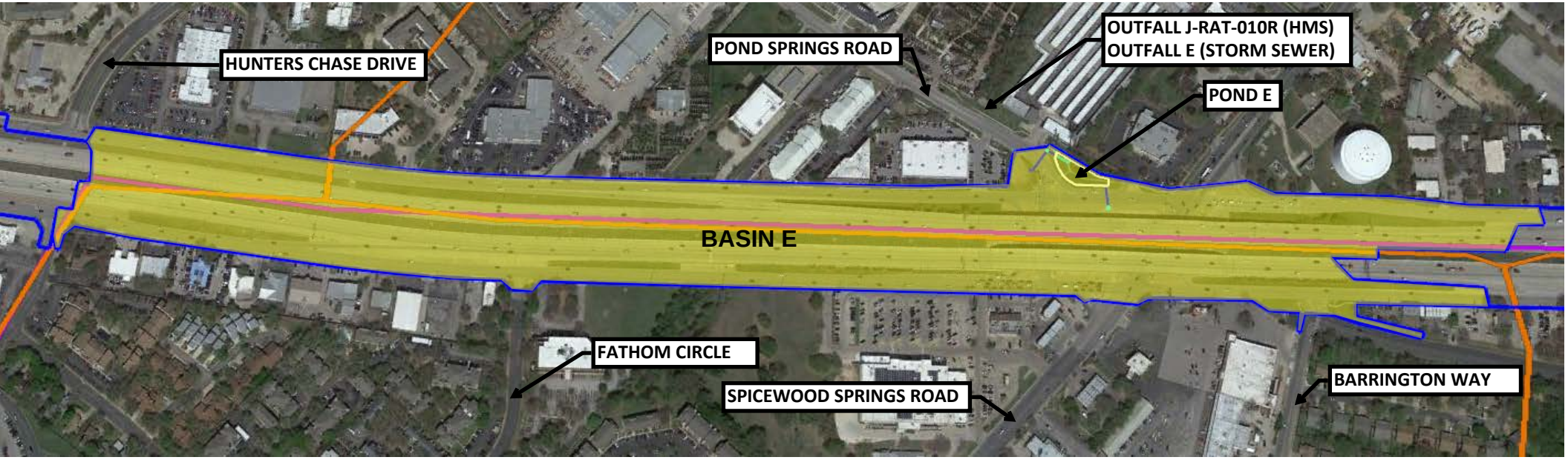

MAJOR DRAINAGE BASIN MAPS A THROUGH H



MAJOR DRAINAGE BASIN MAPS A THROUGH H

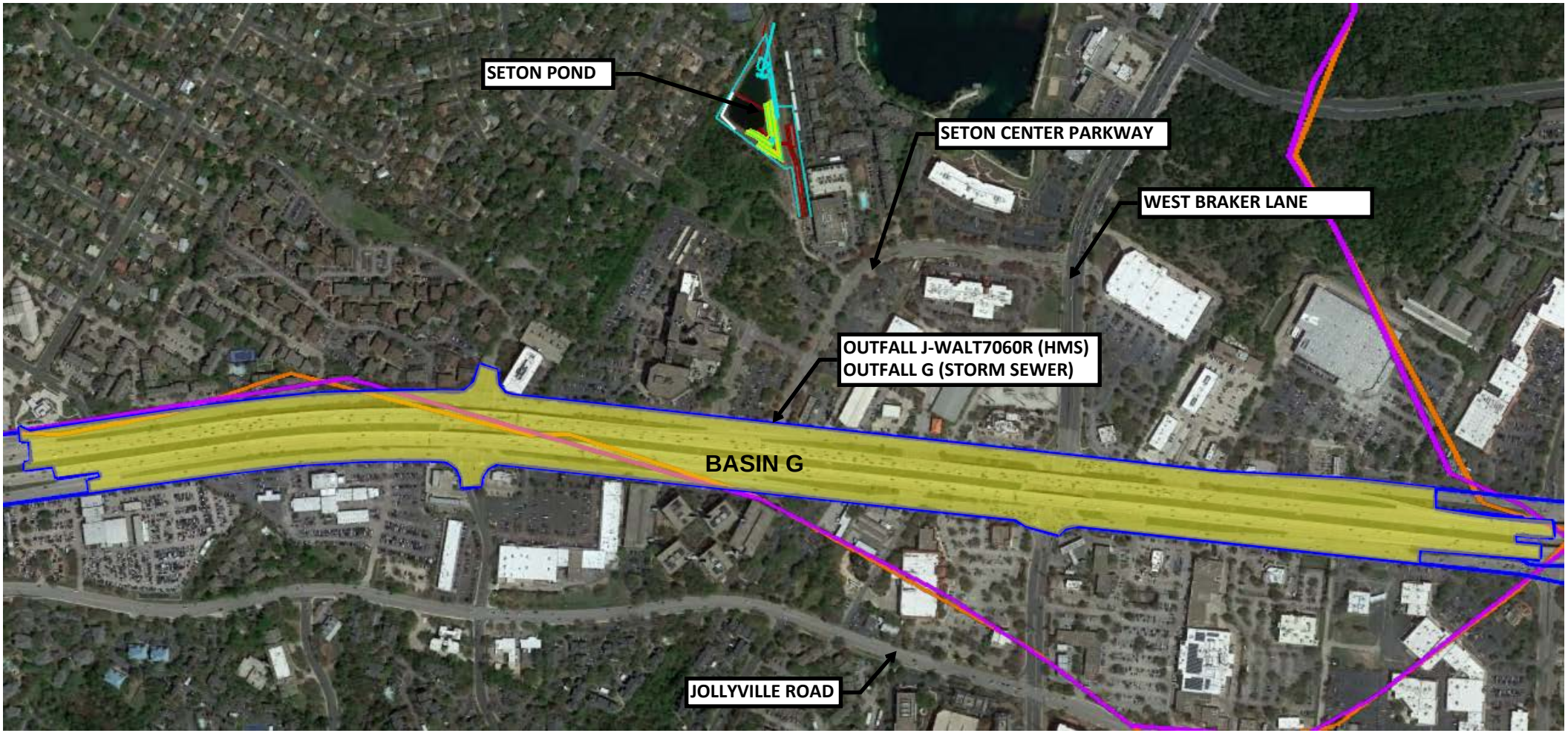

MAJOR DRAINAGE BASIN MAPS A THROUGH H

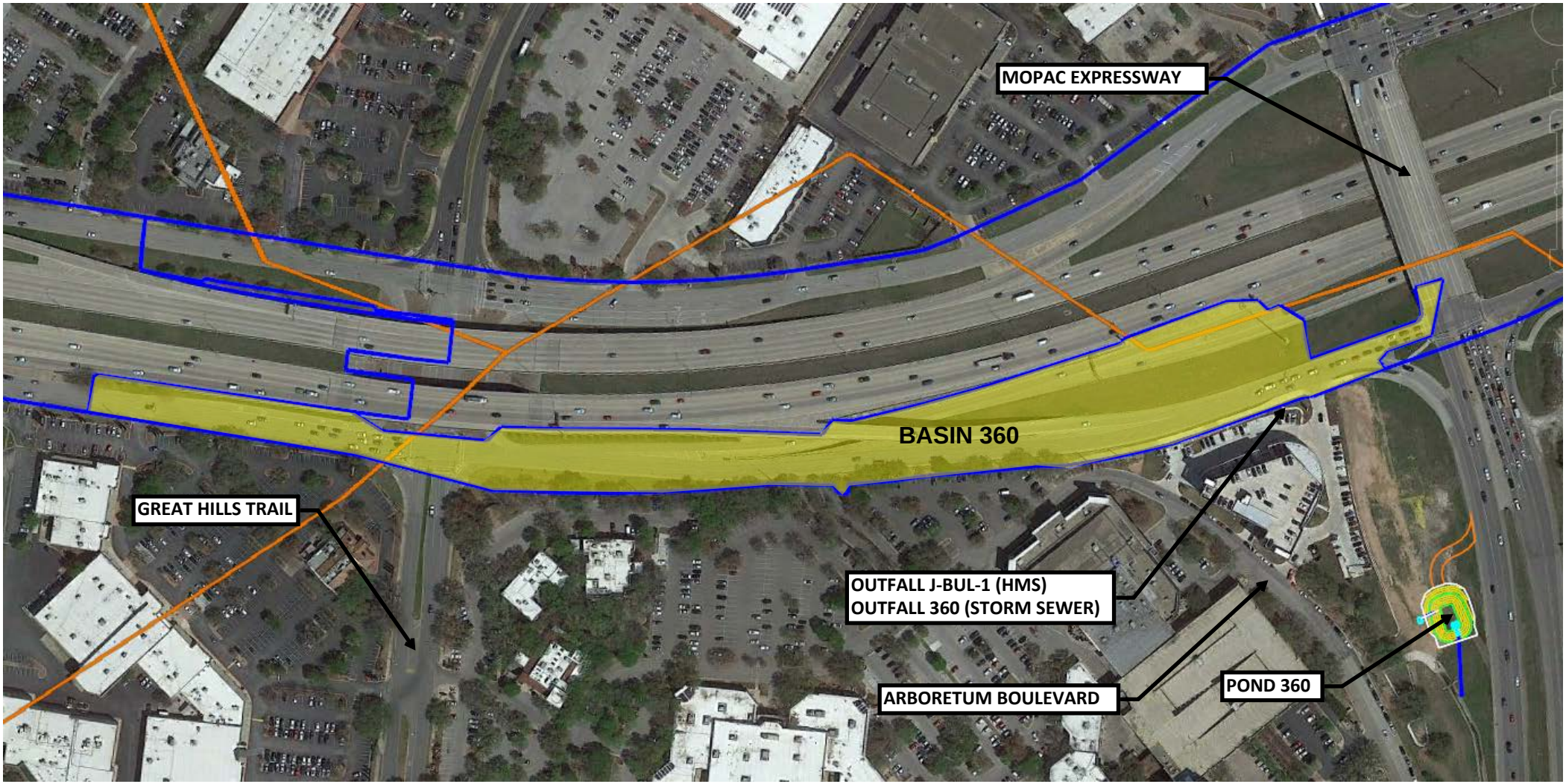

MAJOR DRAINAGE BASIN MAPS A THROUGH H

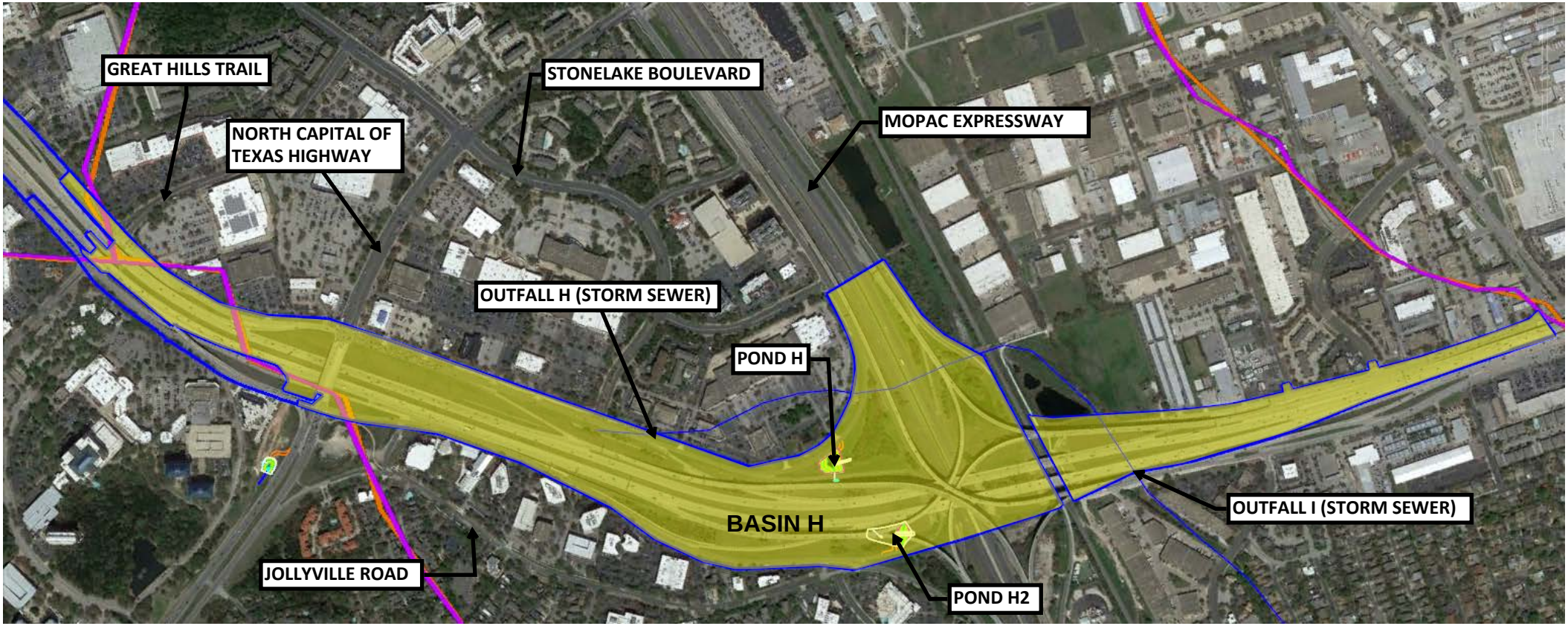

PERMANENT BEST MANAGEMENT PRACTICES (BMPs)

Fourteen existing water quality ponds are situated within the Project right-of-way (ROW) and three existing water quality ponds are situated offsite for a total of seventeen existing water quality ponds. Existing permanent water quality BMPs are summarized by BMP type in Table 3. All existing water quality ponds are permitted by the TCEQ.

Watershed	BMP ID	BMP TYPE	TCEQ RN Number	TCEQ ID Number
Lake Creek	Lake Creek 1A	Underground sedimentation and filtration (pumped)	RN102756582	11-98120101
Lake Creek	Lake Creek 1B	Underground sedimentation and filtration	RN102756582	11-98120101
Lake Creek	Lake Creek 1C	Underground sedimentation and filtration	RN102756582	11-98120101
Lake Creek	620 Median Pond	Sedimentation and filtration	RN102756582	11-98120101
Lake Creek	Line B&C Pond	Extended detention	RN103171237	11-03060501
Lake Creek	Pond E	Vertical gravel filter	RN103171237	11-03060501
Lake Creek	Pond F	Vertical gravel filter	RN103171237	11-03060501
Lake Creek	Pond G	Vertical gravel filter	RN103171237	11-03060501
Lake Creek	Hymeadow 2A	Underground sedimentation and filtration (pumped)	RN102756582	11-98120101
Lake Creek	Hymeadow 2B	Underground sedimentation and filtration	RN102756582	11-98120101

Watershed	BMP ID	BMP TYPE	TCEQ RN Number	TCEQ ID Number
Lake Creek	Hymeadow 2C	Underground sedimentation and filtration	RN102756582	11-98120101
Lake Creek	Hymeadow 2D1	Underground sedimentation and filtration	RN102756582	11-98120101
Lake Creek	Hymeadow 2D2	Underground sedimentation and filtration	RN102756582	11-98120101
Lake Creek	Pond Springs Pond	Sedimentation and filtration	RN102756582	11-98120101
Lake Creek	Woods Pond	Wet Pond	RN102756582	11-98120101
Walnut Creek	West Cow Path	Sedimentation and filtration	RN102645181	11-93051901
Walnut Creek	Seton Pond	Sedimentation and filtration	RN102757036	11-91031903

Table 3 Existing Water Quality BMPs

Seven existing water quality ponds within the Project ROW will be abandoned in place and replaced with subsurface Jellyfish® Filter systems. One existing water quality pond within the Project ROW will be reconfigured to function as a batch detention pond with stacked detention. Two existing off-site water quality ponds will be reconfigured to function as batch detention with stacked detention for hydraulic attenuation. One existing off-site water quality pond, Woods Pond, will be improved to function as a wet pond with stacked detention. Three new water quality ponds will be constructed to function as batch detention ponds. Table 4 presents the proposed permanent BMPs that will be reconfigured and newly constructed in 183N Phase 2 and 183N Phase 2 Mod.

BMP ID	**Watershed**	**Basin ID**	**Proposed BMP Configuration**
Lake Creek 1A	Lake Creek	A	Jellyfish® Filter
Lake Creek 1B	Lake Creek	A	Jellyfish® Filter
Lake Creek 1C	Lake Creek	A	Jellyfish® Filter

BMP ID	Watershed	Basin ID	Proposed BMP Configuration
Hymeadow Pond 2A	Lake Creek	B	Jellyfish® Filter
Hymeadow Pond 2B	Lake Creek	B	Jellyfish® Filter
Hymeadow Pond 2C	Lake Creek	B	Jellyfish® Filter
Hymeadow Pond 2D1	Lake Creek	B	Surface batch detention
Hymeadow Pond 2D2	Lake Creek	B	Jellyfish® Filter
Pond Springs Pond	Lake Creek	C	Surface batch detention
Woods Pond	Lake Creek	D	Wet pond
Pond E	Rattan Creek	E	Surface batch detention
West Cow Path	Walnut Creek	F	Surface batch detention
Seton Pond	Walnut Creek	G	Surface batch detention
Pond 360	Bull Creek	H	Surface batch detention
Pond H	Shoal Creek	H	Surface batch detention
Pond H2	Shoal Creek	H	Surface batch detention

Table 4 PROPOSED WATER QUALITY BMPs

All proposed permanent BMPs are designed according to the guidelines presented in the TCEQ Technical Guidance on Best Management Practices (Revised July 2005) and Exhibit C Technical Provisions of the 183 North Mobility Design-Build Agreement (DBA) with the following exceptions.

DBA requirements stipulate the Project shall achieve no net increase in TSS annual loading from 1987 baseline impervious cover (except for Rattan, Shoal, and Bull creeks) to Ultimate Design impervious cover. For the Rattan Creek watershed, GHC shall use the 1999 baseline impervious cover. For Shoal Creek and Bull Creek, GHC shall use the 1992 baseline impervious cover.

Table 5 below provides a summary of TSS load produced and TSS load removed for each new and reconfigured BMP. An updated water quality design report for Lake Creek watershed is provided in Attachment G Construction Plans. Water quality design reports for other watersheds traversed by the Project including Rattan Creek, Walnut Creek, Bull Creek, and Shoal Creek have not changed and were provided in 183N Phase 2 application. The content of each water quality design report includes design criteria, design methodology, impervious area maps, TSS removal calculations, BMP sizing for each permanent BMP, and sizing for stacked detention storage.

Corridor wide TSS Removal Summary																
			Pre-Project Calculations				Pre-Project to Post-Project Ultimate Project Calculations									
Pond ID	Exist BMP	Prop BMP	Pre-Project Baseline Year	Total Drainage Basin/Outfall Area (acres)	Pre-development Impervious Area within Project limits (acres)	Annual TSS Load Discharged (lbs)	Total BMP Catchment Area (acres)	Baseline Impervious Cover within Project limits (acres)	Ultimate Design Impervious Cover within Project limits (acres)	Additional Annual TSS Load Produced by Ultimate Design (lbs)	TCEQ Required TSS Load Removal (lbs)	Potential TSS Load Removed Based on Proposed BMP Volumes (lbs)	Required TSS Load Removed (For Volume Calcs) (lbs)	Annual TSS Load Discharged (lbs)	Annual TSS Load Reduction (lbs)
Basin A			**1987**	**52.64**	**20.76**	**23524**	**52.64**	**20.76**	**53.46**	**35643**	**28462**	**53851**	**28504**	**7139**	**16385**
Lakecreek 1A	Pumped Underground	Jellyfish		7.86	3.02	3426	7.86	3.02	8.31	5777	4604	8366	4604	1173	2252
Lakecreek 1B	Underground Sed/Fil	Jellyfish		8.24	1.28	1537	8.24	1.28	8.43	7794	6223	8491	6223	1571	-34
Lakecreek 1C	Underground Sed/Fil	Jellyfish		8.42	5.24	5853	8.42	5.24	8.43	3475	2777	8494	2777	698	5156
620 Median Pond	Sed/Fil	Sed/Fil		28.12	11.22	12708	28.12	11.22	28.29	18598	14858	28501	14900	3698	9011
Basin B			**1987**	**19.86**	**6.31**	**7217**	**19.86**	**6.31**	**17.70**	**12405**	**9914**	**17868**	**10412**	**2119**	**5098**
Hymeadow 2A	Pumped Underground	Jellyfish		6.91	0.80	991	6.91	0.80	6.62	6339	5066	6675	5066	1273	-282
Hymeadow 2B	Underground Sed/Fil	Jellyfish		3.79	0.29	382	3.79	0.29	2.94	2886	2307	2976	2307	579	-198
Hymeadow 2C	Underground Sed/Fil	Jellyfish		3.28	2.09	2333	3.28	2.09	2.84	817	653	2868	653	164	2169
Hymeadow 2D1	Underground Sed/Fil	Batch Detention		4.62	2.81	3141	4.62	2.81	4.51	1852	1480	4546	1977	0	3141
Hymeadow 2D2	Underground Sed/Fil	Jellyfish		1.26	0.32	370	1.26	0.32	0.79	512	409	803	409	103	267
Basin C			**1987**	**30.94**	**12.43**	**14075**	**30.94**	**12.43**	**27.20**	**16087**	**12856**	**27464**	**12900**	**3187**	**10888**
Pond Springs	Sed/Fil	Batch Detention		30.94	12.43	14075	30.94	12.43	27.20	16087	12856	27464	12900	3187	10888
Basin D			**1987**	**36.41**	**13.92**	**15793**	**36.41**	**13.92**	**32.18**	**19888**	**15894**	**33204**	**15900**	**3988**	**11805**
Woods Pond	Wet Pond	Batch Detention		36.41	13.92	15793	36.41	13.92	32.18	19888	15894	33204	15900	3988	11805
Basin E			**1999**	**37.35**	**29.58**	**32865**	**37.35**	**29.58**	**36.00**	**6992**	**5588**	**36293**	**6000**	**992**	**31873**
Pond E	N/A	Batch Detention		37.35	29.58	32865	37.35	29.58	36.00	6992	5588	36293	6000	992	31873
Basin F			**1987**	**80.66**	**32.15**	**36416**	**80.66**	**32.15**	**77.13**	**48989**	**39151**	**77768**	**39200**	**9789**	**26626**
West Cow Path	Sed/Fil	Batch Detention		80.66	32.15	36416	80.66	32.15	77.13	48989	39151	77768	39200	9789	**26626**
Basin G			**1987**	**51.24**	**23.39**	**26364**	**51.24**	**23.39**	**51.03**	**30104**	**24058**	**51419**	**24100**	**6004**	**20361**
Seton Pond	Sed/Fil	Batch Detention		51.24	23.39	26364	51.24	23.39	51.03	30104	24058	51419	24100	6004	20361
Basin 360			**1992**	**6.06**	**4.30**	**4788**	**6.06**	**4.30**	**4.58**	**305**	**244**	**4638**	**360**	**0**	**4788**
Pond 360	N/A	Batch Detention		6.06	4.30	4788	6.06	4.30	4.58	305	244	4638	360	0	4638*
Basin H			**1992**	**129.81**	**74.40**	**83285**	**129.81**	**74.40**	**85.52**	**12111**	**9679**	**86862**	**9700**	**2411**	**80874**
Pond H/H2	N/A	Batch Detention		129.81	74.40	83285	129.81	74.40	85.52	12111	9679	86862	9700	2411	80874
TSS Load Discharge Project Total				**445**	**217**	**244328**	**445**	**217**	**385**	**182525**	**145844**	**389366**	**147076**	**35629**	**208699**

*MAXIMUM LOAD REDUCTION VALUE IS 4638, HOWEVER THE TCEQ CALCULATES 4788, IN THE CASE WHEN THE PERCENT IMPERVIOUS ACREAGE ADDITION IS SMALL, IT IS CALCULATING AN ANNUAL LOAD REDUCTION MORE THAN THE ACTUAL VALUE PERMITS.

Table 5 TSS Removal Summary

ATTACHMENT E – BMPS FOR UPGRADIENT(OFFSITE) STORMWATER

1.2 OFFSITE STORMWATER

Offsite upgradient stormwater areas that are captured by existing water quality ponds currently permitted by TCEQ will be captured in existing ponds to remain and existing ponds to be reconfigured and expanded. All other offsite upgradient stormwater areas will bypass the Project through existing cross culverts or existing closed drainage systems crossing the US 183 ROW.

Reconfigured BMPs accepting offsite stormwater are listed in Table 6 below. Refer to water quality design report for each watershed traversed by the Project, including Lake Creek, Rattan Creek, Walnut Creek, Bull Creek, and Shoal Creek, provided in Attachment G Construction Plans.

BMP ID	Watershed	Basin ID	Proposed BMP Configuration
Hymeadow Pond 2C	Lake Creek	B	Jellyfish® Filter
Hymeadow Pond 2D1	Lake Creek	B	Surface batch detention
Hymeadow Pond 2D2	Lake Creek	B	Jellyfish® Filter
Pond Springs Pond	Lake Creek	C	Surface batch detention
Woods Pond	Lake Creek	D	Wet pond
West Cow Path	Walnut Creek	F	Surface batch detention
Seton Pond	Walnut Creek	G	Surface batch detention

Table 6 BMPs Capturing Offsite Stormwater

ATTACHMENT F – BMPs FOR ON-SITE STORMWATER

1.3 ON-SITE STORMWATER

All existing BMPs listed in Table 3 capture on-site stormwater. Of the 17 existing water quality ponds listed in Table 3, 5 will be reconfigured to function as batch detention ponds, 7 new Jellyfish® Filter systems and 3 new water quality batch detention ponds will be constructed within the Project ROW to meet the project criteria. All existing water quality ponds within the Project ROW and those offsite will remain in service for the duration of construction activities performed under this 183N Phase 2 Mod application. Reconfigured ponds will be constructed using a phased approach to allow uninterrupted treatment of stormwater up until each pond is fully functional as a batch detention pond or the Jelly fish cartridge filter system is operational.

Section 3.2.17 of RG-348, Addendum January 20, 2017, provides guidance on the selection criteria for batch detention facilities.

- *Use when BMP methods are limited, because can achieve more than 80% TSS removal.*
- *Use where water availability prevents use of wet basins.*
- *Use where land availability is restricted (site is less than 5 acres for below grade installation) and there is little elevation head available.*
- *Use where Hazardous Material Trap is required.*

Section 15.7.1, of the Technical Provisions states, *"Any existing Hazardous Material Traps will be removed and replaced with manual valves on the facility outlet structure. All ponds will have manual valves at a readily accessible location as approved by the Mobility Authority. The valve type shall be as coordinated with and approved by the Mobility Authority"*.

A manual valve and an actuated valve will be provided at the outfall to meet the requirements for batch detention.

Below is a summary of the design approach for batch detention structures. All batch detention structures are designed to be offline treatment.

- Storm sewer collection system – collects the runoff from the project limits.
- Flow diversion structure – The flow diversion structure is upstream of both the outfall culvert and the batch detention structure. The weir elevations of the flow diversion structures are set at the required water quality treatment surface elevations. The flow diversion structure ensures that only the water volume that needs to be treated is sent to the basin.
- Water quality structure sizing – is based upon the TCEQ spreadsheets. Existing structures are modified to fit into the physical limitations of the project and where appropriate, they are modified to ensure no conflict with future ultimate work.
- Outfall structure – A trash rack is placed at the outfall to collect debris. After water passes through the trash rack the outflow is controlled by an actuated valve and a level. The level

senses when the basin is full and sends a signal that starts a 12-hour timer. After 12 hours the timer sends a signal to the actuated valve to open. The actuated valve is designed to drain down the structure over a period of 48 hours and at a velocity of less than 3fps. This slow draw down prevents a potential peak in the downstream hydrograph. The slow draw down of less than 3 fps also prevents the resuspension of solids in the structures. Resuspension of solids can be flushed downstream with a high outfall velocity.

- A manual valve and an actuated valve will be provided at the outfall to meet the requirements for batch detention and technical provisions.
- Maintenance facilities such as access from the roadway and equipment ramps are also part of the site design for the batch detention facilities and shown on the water quality plans and profiles in Attachment G Construction Plans.

ATTACHMENT G – CONSTRUCTION PLANS

Construction plans for the elements of work to be implemented in 183N Phase 2 Mod application are listed below and provided in a separate attachment.

CONSTRUCTION PLANS 183N Phase 2 Mod
SW3P (Phase 2 Mod elements)
Segment 1A Drainage (Phase 2 Mod elements)
Segment 1A Water Quality Ponds (1A, 1B, 1C, 2A, 2B, 2C, & 2D2)
Lake Creek Watershed Water Pollution Abatement Plan

Except for changes included in the plans noted above, Construction plans for the elements of work to be implemented in 183N Phase 2 application listed below remain valid.

CONSTRUCTION PLANS 183N Phase 2
SW3P & EPIC Phase 2
Traffic Control Plan Segment 1 Phase 2
Segment 1 Removal Plans
Segment 1A Roadway
Segment 1A Drainage
Segment 1B Roadway
Segment 1B Drainage
Segment 1B Water Quality Ponds
Segment 1C Roadway
Segment 1C Drainage
Segment 1C Water Quality Ponds
Bridge 1 (Lakeline Mall Dr overpass)
Bridge 2 (RM 620 overpass)
Bridge 3 (Pecan Park Blvd overpass)
Bridge 4 (Lake Creek Pkwy overpass)

CONSTRUCTION PLANS 183N Phase 2
Bridge 5 (Anderson Mill Rd overpass)
Bridge 6 (Spicewood Springs/McNeil Rd overpass)
Bridge 7 (Oak Knoll Dr overpass)
Bridge 8 (Duval Rd overpass)
Bridge 9 (Balcones Woods Dr overpass)
Bridge 10 (Braker Ln overpass)
Bridge 11 (Great Hills Trail overpass)
Bridge 12 (new US 183 managed lanes direct connector)
Water Quality Pond Miscellaneous Structural Details (Pond 2D1, Pond E & Pond G only)
Rattan Creek Watershed Water Pollution Abatement Plan
Shoal Creek Watershed Water Pollution Abatement Plan
Walnut Creek Watershed Water Pollution Abatement Plan
Bull Creek Watershed Water Pollution Abatement Plan

ATTACHMENT H – INSPECTION, MAINTENANCE, REPAIR AND RETROFIT PLAN

1.1 GENERAL

As discussed previously in this EAPP Roadway Application, the pre-construction impervious cover for permanent works will increase from 66% to 74% during this 183N Phase 2. Temporary pavement to facilitate traffic control will cause a net increase in impervious cover of 0.30 acres and therefore will rely on temporary BMPS and existing permanent BMPs (water quality ponds) to maintain water quality requirements.

For reference, the planned Phase 2 SW3P and EPIC has been delineated in contract plans which have been included in Attachment G Construction Plans to this submittal.

All erosion and sediment control measures will be maintained in effective operating condition by following the Project maintenance procedures. The general maintenance and inspection requirements are documented in the SW3P provided in Attachment G Construction Plans and the ECMP. The maintenance plan for temporary, existing permanent, and proposed permanent BMPs meets or exceeds the maintenance guidance provided in RG-348. In addition to the right-of-way inspections, adjacent areas are also required to be visibly inspected for evidence of project-related impacts.

For the 183N Phase 2 Mod and 183N Phase 2 planned scope of work, GHC will install and maintain the integrity of temporary erosion and sedimentation control devices to capture silt and debris until soil disturbing activities are completed and permanent erosion control features are installed, or the disturbed area has been adequately stabilized as approved in accordance with contract documents and Standard Specifications. In addition, the existing permanent BMPs previously listed in Table 3 will be reconfigured and new permanent BMPs will be constructed.

1.2 MAINTENANCE OPERATIONS

Maintenance, repairs, or retrofits will adhere to the project requirements and details for the BMP. Damaged portions of temporary BMPs will be removed and replaced as needed to adhere to the contract documents, and temporary BMPs that cannot be adequately repaired or retrofitted to meet project requirements, shall be removed, and replaced entirely.

The maintenance documentation procedures and recordkeeping practices are summarized in the SW3P and described in the ECMP for the project. Forms for reporting and recordkeeping are also being developed as standard operating procedures.

BMP maintenance operations will be performed on a regular basis as outlined below and as required to ensure that the BMPs and measures are constructed and functioning as designed. Operations will also be performed as required to maintain site aesthetics, vegetation, BMP access, and debris removal. After

a Texas licensed professional engineer has certified that temporary BMPs are constructed as designed and submitted certification to the TCEQ regional office, the maintenance schedule as outlined below will commence. The inspection and maintenance of temporary BMPs will be documented on TxDOT Form 2118, include herein.

General:

1. Records and diaries will be kept for maintenance activities listed and performed by the CTRMA and the Design-Build Contractor (GHC). All records must be retained for a period of not less than five (5) years. The maintenance log for the permanent BMPs is attached.
2. Maintenance and contracted personnel may oversee minor repairs. Major repairs or retrofits must be overseen by the CTRMA.
3. Roadways and roadsides will be reviewed regularly, usually weekly, by maintenance forces. BMPs will be inspected after rainfall events to ensure no damage to grass cover, accumulation of litter, or erosion has occurred. Areas of concern will be documented, and any necessary maintenance scheduled.
4. Right-of-way areas, including areas of vegetated filter strips and batch detention basins, will be mowed. Mowing will be delayed during times when preferred vegetation is seeding to allow for natural propagation to continue.
5. A native seed mix will be used for revegetation.

If not specifically outlined in the Project SW3P or the ECMP, inspection and maintenance of temporary BMPs will be in accordance with TCEQ RG-348, Technical Guidance on Best Management Practices.

1.3 EXISTING AND PROPOSED PERMANENT BMPS

Of the 17 existing water quality pond BMPs serving the project, those within the defined Project right-of-way (ROW) are required to be maintained by GHC from the start of construction activities through Substantial Completion, at which time the maintenance requirements will be returned to MA or TxDOT. These BMP water quality elements are comprised of vertical gravel filter, vaulted sedimentation-sand filtration, surface sedimentation-sand filtration ponds, wet ponds, and extended detention basins. Two existing water quality ponds within the Project ROW will be reconfigured to function as a batch detention pond with stacked detention. Two existing off-site water quality ponds will be reconfigured to function as batch detention with stacked detention for hydraulic attenuation. One existing off-site water quality pond, Woods Pond, will be improved to continue functioning as a wet pond with stacked detention. Three new water quality ponds will be constructed to function as batch detention ponds and seven new Jellyfish® Filter systems will replace the existing underground vaults that will be abandoned.

Routine inspection of the existing sedimentation-sand filtration system and wet pond BMPs will be performed on a semi-annual basis and after large storms. Certain construction and maintenance

practices are essential to efficient operation of the filter. With temporary SW3P BMPs in place at the start of construction, unusual loading on the existing permanent BMPs will be minimal.

1.4 MAINTENANCE OF EXISTING SEDIMENTATION/FILTRATION PONDS

Inspection

Existing permanent BMP facilities will be inspected at least twice per year (once during or immediately following wet weather) to evaluate facility operation. During each inspection, erosion areas inside and downstream of the BMP will be evaluated and repaired or revegetated if needed. With each inspection, any damage to the structural elements of the system (pipes, concrete drainage structures, retaining walls, etc.) must be identified and repaired immediately. Cracks, voids, and undermining should be patched/filled to prevent additional structural damage. Trees and root systems should be removed to prevent growth in cracks and joints that can cause structural damage.

Sediment Removal

Remove sediment from the inlet structure and sedimentation chamber when sediment buildup reaches a depth that exceeds the functional parameters of the facility or when the proper functioning of inlet and outlet structures is impaired.

Media Replacement

Maintenance of the filter media is necessary when the drawdown time exceeds 48 hours. When this occurs, the upper layer of sand should be removed and replaced with new material meeting the original specifications. Any discolored sand should also be removed and replaced. In filters that have been regularly maintained, this should be limited to the top 2 to 3 inches.

Debris and Litter Removal

Debris and litter will accumulate near the sedimentation basin outlet device and should be removed during regular mowing operations and inspections. Particular attention should be paid to floating debris that can eventually clog the control device or riser.

Filter Underdrain

Clean underdrain piping network to remove any sediment buildup as needed to maintain design drawdown time.

Mowing

Grass areas in and around sand filters must be mowed at least twice annually to limit vegetation height to 18 inches. More frequent mowing to maintain aesthetic appeal may be necessary in landscaped areas. Vegetation on the pond embankments should be mowed as appropriate to prevent the establishment of woody vegetation.

1.5 MAINTENANCE OF WET BASINS

Inspection

The existing wet pond, known as Woods Pond, will be inspected at least twice per year (once during or immediately following wet weather) to evaluate facility operation. The inspection will focus on the following items

- Embank checked for subsidence erosion, leakage, cracking, and tree growth.
- Condition of emergency spillway
- Inlet, barrel, and outlet checked for clogging
- Adequacy of upstream and downstream channel erosion protection measures
- Stability of side slopes
- Replace any dead or displaced vegetation
- Cracks, voids, and undermining should be patched/filled to prevent additional structural damage
- Tree root systems should be removed to prevent growth in cracks and joints

Mowing

Existing side-slopes, embankments and emergency spillway of the basin should be mowed at least twice a year.

Debris and Litter Removal

Remove debris and litter from the surface of the basin especially floatable debris around the riser. The outlet should be checked for clogging.

Erosion Control

Check Basin side slopes, emergency spillway, and embankment for slumping an erosion and implement corrective measures as necessary. Also inspect riprap protecting the channel near outlet.

Nuisance Control

Evaluate ponds for nuisance control such as insects, weeds, odors, and algae.

Sediment Removal

Sediment accumulated in the sediment forebay area should be removed from the facility every two years to prevent accumulation in the permanent pool.

1.6 MAINTENANCE OF BATCH DETENTION PONDS

Inspection

Inspections should take place a minimum of twice a year. One inspection should take place during wet weather to determine if the basin is meeting the target detention time of 12 hours and a drawdown time of no more than 48 hours. The remaining inspections should occur between storm events so that manual operation of the valve and controller can be verified. The level sensor in the basin should be inspected and any debris or sediment in the area should be removed. The outlet structure and the trash screen should be inspected for signs of clogging. Debris and sediment should be removed from the orifice and outlet(s). Debris obstructing the valve should be removed. During each inspection, erosion areas inside and downstream of the BMP should be identified and repaired/revegetated immediately.

Mowing

The basin, basin side-slopes, and embankment of the basin must be mowed to prevent woody growth and control weeds. A mulching mower should be used, or the grass clippings should be caught and removed. Mowing should take place at least twice a year, or more frequently if vegetation exceeds 18 inches in height.

Litter and Debris Removal

Litter and debris removal should take place at least twice a year, as part of the periodic mowing operations and inspections. Debris and litter should be removed from the surface of the basin. Particular attention should be paid to floatable debris around the outlet structure. The outlet should be checked for possible clogging or obstructions and any debris removed.

Erosion control

The basin side slopes and embankment all may periodically suffer from slumping and erosion. To correct these problems, corrective action, such as regrading and revegetation, may be necessary. Correction of erosion control should take place whenever required based on the periodic inspections.

Nuisance Control

Standing water or soggy conditions may occur in the basin. Some standing water may occur after a storm event since the valve may close with 2 to 3 inches of water in the basin. Some flow into the basin may also occur between storms due to spring flow and residential water use that enters the storm sewer system. Twice a year, the facility should be evaluated in terms of nuisance control (insects, weeds, odors, algae, etc.).

Structural Repairs and Replacement

With each inspection, any damage to structural elements of the basin (pipes, concrete drainage structures, retaining walls, etc.) should be identified and repaired immediately. An example of this type of repair can include patching of cracked concrete, sealing of voids, removal of vegetation from cracks and joints. The various inlet/outlet structures in a basin will eventually deteriorate and must be replaced.

Sediment Removal

A properly designed batch detention basin will accumulate quantities of sediment over time. The accumulated sediment can detract from the appearance of the facility and reduce the pollutant removal performance of the facility. The sediment also tends to accumulate near the outlet structure and can interfere with the level sensor operation. Sediment shall be removed from the basin at least every 5 years, when sediment depth exceeds 6 inches, when the sediment interferes with the level sensor or when the basin does not drain within 48 hours. Care should be taken not to compromise the basin lining during maintenance.

Logic Controller

The Logic Controller should be inspected as part of the twice-yearly investigations. Verify that the external indicators (active, cycle in progress) are operating properly by turning the controller off and on, and by initiating a cycle by triggering the level sensor in the basin. The valve should be manually opened and closed using the open/close switch to verify valve operation and to assist in inspecting the valve for debris. The solar panel should be inspected and any dust or debris on the panel should be carefully removed. The controller and all other circuitry and wiring should be inspected for signs of corrosion, damage from insects, water leaks, or other damage. At the end of the inspection, the controller should be reset.

1.7 MAINTENANCE OF JELLYFISH® FILTERS

Jellyfish® Filter Inspection and Maintenance

Jellyfish cartridges are passively backwashed automatically after each storm event, which removes accumulated sediment from the membranes and significantly extends the service life of the cartridges and the maintenance interval. If required, the cartridges can be easily manually backwashed without removing the cartridges. Additionally, the lightweight cartridges can be removed by hand and externally rinsed, and rinsed cartridges then re-installed. These simple maintenance options allow for cartridge regeneration, thereby minimizing cartridge replacement costs and life-cycle treatment costs while ensuring long-term treatment performance.

Regular inspection and maintenance are proven, cost-effective ways to maximize water resource protection for all stormwater pollution control practices and are required to insure proper functioning of the Jellyfish® Filter. Inspection of the Jellyfish® Filter is performed from the surface, while proper maintenance requires a combination of procedures conducted from the surface and with worker entry into the structure. Please refer to the following information and guidelines before conducting inspection and maintenance activities:

Inspection

Post-construction inspection is required prior to putting the Jellyfish Filter into service. Routine inspections are recommended quarterly during the first year of operation to accurately assess the sediment and floatable pollutant accumulation, and to ensure that the automatic backwash feature is functioning properly. Inspection frequency in subsequent years is based on the maintenance plan developed in the first year but must occur annually at a minimum. Inspections should also be performed immediately after oil, fuel, or another chemical spill.

Maintenance Service

The unit must be cleaned annually. This cleaning includes removal and appropriate disposal of all water, sediment, oil and grease, and debris that has accumulated within the unit. The Jellyfish Filter is inspected and maintained by professional vacuum cleaning service providers with experience in the maintenance of underground tanks, sewers and catch basins. Since some of the maintenance procedures require manned entry into the Jellyfish structure, only professional maintenance service providers trained in confined space entry procedures should enter the vessel. Service provider companies typically have personnel who are trained and certified in confined space entry procedures according to local, state, and federal standards.

Filter cartridges should be tested for adequate flow rate, every 12 months and cleaned and re-commissioned, or replaced if necessary. A manual backflush must be performed on a single draindown cartridge using a Jellyfish Cartridge Backflush Pipe (described in the Jellyfish® Filter Owner's Manual). If the time required to drain 14 gallons of backflush water from the Backflush Pipe (from top of pipe to the top of the open flapper valve) exceeds 15 seconds, it is recommended to perform a manual backflush on each of the cartridges. After the manual backflush, the draindown test should be repeated on a single cartridge to determine if the cartridge can drain 14 gallons of water in 15 seconds. If the cartridge still does not achieve the design flow rate, it must be replaced. The unit should be cleaned out immediately after an oil, fuel, or chemical spill.

External Rinsing

This cartridge cleaning procedure is performed by removing the cartridge from the cartridge deck and externally rinsing the filtration tentacles using a low-pressure water sprayer, as described in the Jellyfish® Filter Owner's Manual. If this procedure is performed within the structure, the cartridge or individual filtration tentacles should be rinsed while safely suspended over the maintenance access wall opening in the cartridge deck, such that rinsate flows into the lower chamber of the Jellyfish® Filter. If the rinsing procedure is performed outside the structure, the cartridge or individual filtration tentacles should be rinsed in a suitable basin such as a plastic barrel or tub, and rinsate subsequently poured into the maintenance access wall opening in the cartridge deck. Sediment is subsequently removed from the lower chamber by standard vacuum service.

Contech

Additional information regarding Jellyfish Filter maintenance requirements are found in Contech's Owner's Manual which is included in the Appendices.

Jellyfish Filter Inspection / Maintenance Completion - Summary

Company Name: _____

Company Address: _____

City/State/Zip: _____

Phone: _____

Engineer: _____

Engineer Address: _____

City/State/Zip: _____

Phone: _____

Property Owner: _____

Jellyfish Model: _____

	Jan	Feb	Mar	Apr	May	Jun	Jul	Aug	Sep	Oct	Nov	Dec
Oil Depth (inches)												
Sediment Depth (inches)												
Completed by												
Date												
Floatables (optional)												

I hereby certify that the monitoring and maintenance of the Jellyfish Filter unit was completed in accordance with the directions of the Jellyfish inspection and maintenance plan.

Signed by: _____
Property Owner or designee

CONSTRUCTION STORMWATER POLLUTION PREVENTION PLAN
FIELD INSPECTION AND MAINTENANCE REPORT

Form 2118 (Rev. 4/20) Page 1 of 2

Project Information

Inspection Cycle (select only one):

☒ At least once every 7 calendar days

☐ At least once every 14 calendar days and within 24 hours after 0.5 inches or more of rainfall

☐ *Other

CSJ: 0151-05-100 & 3136-01-185
Project: 183 North Mobility Project
Highway: US 183 and Loop 1 (MOPAC)
County: Travis & Williamson

Inspection Date:
TCEQ Authorization No.: TXR15xxxx
Date of Last Rainfall:
Amount of Last Rainfall: (inches)

***For "other" options, the Engineer must verify compliance with Part III.F.7(c) of the TPDES Construction General Permit (CGP) and approve revisions to the SWP3.**

Inspected Best Management Practice (BMP)/Areas

All of these BMPs/areas must be inspected when present on the right-of-way

☒ Disturbed areas
☒ Discharge locations
☒ Erosion control BMPs
☒ Sediment control BMPs
☒ Concrete truck washout areas
☒ Areas where litter/debris/trash collect
☒ Areas that generate dust
☒ Postings
☐ Material stockpiles
☒ Areas where vehicles enter/leave site
☒ Portable sanitary facilities
☒ Construction material storage areas
☒ Parking/equipment storage areas
☒ Chemical/fuel storage areas

Other

Corrective Actions, Maintenance, Upgrading or Additional Controls

Except the items listed below, all areas/BMPs indicated above have been inspected and do not require maintenance, upgrading or additional controls. If multiple highways or project locations are involved, identify the highway or project location of the BMPs/areas requiring maintenance or improvement. Document all changes to the SWP3.

Station(s) or Location	Left or Right of Centerline	Issue/BMP	Corrective Action	Priority*	Date of Corrective Action Completed
Other/Notes			Cause		
Other/Notes			Cause		
Other/Notes			Cause		
Other/Notes			Cause		
Other/Notes			Cause		

* **High** - must be addressed immediately; all other project work is stopped until issue is resolved.
Med - address as soon as practicable or as directed; other work can continue.
Low - address within 7 days or before the next rainfall event.

1.8 SIGNATURE OF RESPONSIBLE PARTY

The inspection, maintenance, repair and retrofit plan described above in Attachment H will be implemented and adhered to by GHC beginning at the maintenance period established in the DBA and continuing for the duration of the 183 North Mobility Project until the time of Final Acceptance.

Great Hills Constructors Authorized Representative

Pat Plueneke — Signature

PROJECT MANAGER — Title

Mark Frye, PE — Authorized Agent Signature

Design Manager — Title

ATTACHMENT I – NOT USED

ATTACHMENT J – MEASURES FOR MINIMIZING SURFACE STREAM CONTAMINATION

1.1 GENERAL

In addition to the seventeen existing water quality ponds that capture stormwater and will remain in service for the duration of 183N Phase 2 construction, GHC will deploy and maintain temporary BMPs prescribed in TCEQ RG-348 and as shown on the SW3P to minimize surface stream contamination. Reconfigured ponds will be constructed using a phased approach to allow uninterrupted treatment of stormwater up until each reconfigured pond is fully functional as a batch detention pond.

1.2 MEASURES FOR OUTSIDE WIDENING

Before removal of existing pavement and barrier, construction of storm sewer and inlet structures, earthwork, drilled shafts for sign structures, and placement of select backfill for outside widening, existing curb inlets at U-turns and NB and SB US 183 service road will be protected with a gravel bag BMPs. Existing drop inlets within the existing outer separation will be protected with silt fence, and sediment traps at specific locations called out in the Phase 2 SW3P. Washout pits will be designated for concrete trucks after placement of concrete for drilled shafts, retaining walls, and pavement. The limits of excavation and disturbance for the outside widening will not exceed the limits shown on the construction plans for TCP S1 Phase 2.

1.3 MEASURES FOR CONSTRUCTION OF RECONFIGURED BMPS AND NEW BMPS

Before construction of reconfigured water quality ponds begins, existing sediment and standing water will be tested for hazard materials and disposed of in accordance with State and Federal regulations. At reconfigured offsite ponds, silt fence will be placed around the pond perimeter and rock filter dams will placed at top of banks of adjacent stream channel. For reconfigured vault ponds, existing curb inlets at NB and SB US 183 service road will be protected with a gravel bag BMPs. Existing drop inlets within the existing outer separation will be protected with silt fence, and sediment traps at specific locations called out in the Phase 2 SW3P. At new pond sites, silt fence will be placed around the pond perimeter and rock filter dams will be placed downstream of pond outfalls until permanent stabilization is in place.

1.4 MEASURES FOR TEMPORARY PAVEMENT

Before construction of temporary pavement to facilitate traffic control, existing drop inlets in roadside ditches adjacent to NB and SB US 183 general purpose lanes will be protected with a gravel bag BMPs or with silt fence as appropriate.

1.5 STREAM FLASHING AND STRONGER FLOWS, AND IN-STREAM EFFECTS

Hydrologic impacts due to construction activities during 183N Phase 2 Mod and 183N Phase 2 are minor. Existing drainage boundaries remain unchanged except where existing storm drain must be adjusted to accommodate outside widening. The outfall of the reconfigured drainage system at these locations remains unchanged. All existing stormwater detention basins, both on-site and off-site, will remain in service. Stream flashing will not result from 183N Phase 2 or 183N Phase 2 Mod construction activities and stronger flows will be minor. Outfall velocities will remain unchanged and there will be no increase in erosion or degradation in water quality. Stacked detention will be implemented for basins where the post-construction runoff volume exceeds the pre-construction runoff volume.

The net increase in runoff resulting from impervious cover at each temporary pavement site for a 2-year and 10-year design frequency is tabulated below.

Temporary Pavement Runoff Computations										
Major Drainage Basin ID	Temporary Pavement Site	Temporary Pavement Drainage Area (acres)	Runoff Coefficient	T_c (min)	Design Frequency	Intensity (in/hr)	Discharge (cfs)	Design Frequency	Intensity (in/hr)	Discharge (cfs)
H	NB US 183 211+00 to 219+00	0.29	0.9	10	2	4.96	1.3	10	7.44	1.9
H	NB US 183 211+50 to 212+50	0.01	0.9	10	2	4.96	0.0	10	7.44	0.0

ATTACHMENT K – VOLUME AND CHARACTER OF STORMWATER

1.1 GENERAL

The Project traverses five watersheds which include Lake Creek, Rattan Creek, Walnut Creek, Bull Creek, and Shoal Creek. Within these five watersheds, nine drainage basins are delineated within the Project ROW. Basin IDs, stream outfalls and watershed are identified below in Table 7.

BASIN ID	WATERSHED	Stream Outfall
A	Lake Creek	Lake Creek
B	Lake Creek	Lake Creek Tributary 2
C	Lake Creek	Lake Creek Tributary 2
D	Lake Creek	Lake Creek Tributary 3
E	Rattan Creek	Rattan Creek
F	Walnut Creek	Walnut Creek Tributary 7
G	Walnut Creek	Walnut Creek Tributary 7A
360	Bull Creek	Bull Creek
H	Shoal Creek	Shoal Creek

Table 7 Watersheds and Stream Outfalls

1.2 PRE-CONSTRUCTION RUNOFF COEFFICIENT

Hydrologic and hydraulic calculations for pre-construction conditions have been developed for all basins listed in Table 7. Pre-construction flows and impervious areas associated with each major basin are listed in Table 8. The weighted pre-construction runoff coefficient for the basins in Table 8 is 0.73 and total peak discharge based on a 10-YR Average Recurrence Interval (ARI) is 1593 CFS.

Pre-construction stormwater runoff is generated from the existing pavement of US 183 freeway lanes, bridge overpasses, frontage roads, and cross streets, captured by pavement inlets, and conveyed in a closed storm drain system to an outfall. Runoff within the existing grass lined median is captured in drop inlets and conveyed in storm drain laterals to a trunkline. Runoff from the border area, between the frontage road and adjacent ROW, is typically generated from existing sod, concrete sidewalk, and paved driveways. The outer separation, between the mainline and frontage road, is mostly grass slopes and runoff is conveyed in grass lined ditches to drop inlets which connect to storm drain trunk lines.

Pre-construction Condition			
Basin ID	**Stream Outfall**	**% Imperviousness**	**10-YR Peak Discharge (CFS)**
A	Lake Creek	84	90
B	Lake Creek Trib 2	71	69
C	Lake Creek Trib 2	71	112
D	Lake Creek Trib 3	73	132
E	Rattan Creek	76	136
F	Walnut Creek Trib 7	74	501
G	Walnut Creek Trib 7A	73	353
360	Bull Creek	71	30
H	Shoal Creek	53	172

Table 8 Pre-Construction Imperviousness and Runoff

1.3 POST CONSTRUCTION RUNOFF COEFFICIENT

Hydrologic and hydraulic calculations for post-construction conditions have been developed for all basins listed in Table 7. Post-construction flows and impervious areas associated with each major basin are listed in Table 9. The weighted post-construction runoff coefficient for the basins in Table 9 is 0.78 and total peak discharge based on a 10-YR (ARI) is 1689 CFS.

Post-construction stormwater runoff would be generated from the new express lane pavement, widened pavement of US 183 freeway lanes and bridge overpasses to accommodate a fourth continuous lane for each bound. Frontage roads, and cross streets, remain as they were in Pre-construction. Continuous sidewalk along both bounds of the frontage roads contribute to additional imperviousness.

Post-construction Condition			
Basin ID	**Stream Outfall**	**% Imperviousness**	**10-YR Peak Discharge (CFS)**
A	Lake Creek	93	96
B	Lake Creek Trib 2	79	74
C	Lake Creek Trib 2	88	167
D	Lake Creek Trib 3	89	148

Post-construction Condition			
E	Rattan Creek	90	151
F	Walnut Creek Trib 7	96	525
G	Walnut Creek Trib 7A	93	457
360	Bull Creek	76	30
H	Shoal Creek	44	42

Table 9 Post-Construction Imperviousness and Runoff

1.4 183N PHASE 2 / 183N PHASE 2 MOD RUNOFF COEFFICIENT

Including the 0.30 acres of temporary impervious area at temporary pavement sites and, the runoff coefficient will increase to 0.78 from the pre-construction condition of 0.73 for the duration of 183N Phase 2 and 183N Phase 2 Mod.

GEOLOGIC ASSESSMENT FORM (TCEQ-0585)

1.1 OVERVIEW

A Geologic Assessment of the 183 North Mobility Project, Travis and Williamson Counties, Texas is included with this 183N Phase 2 Mod EAPP Roadway Application and remains unchanged from the 183N Phase 2 application. This narrative Geologic Assessment accompanies the Texas Commission on Environmental Quality (TCEQ) Geologic Assessment form TCEQ-0585 (Appendix A) completed for the 183 North Mobility Project (Project). This study was prepared for Central Texas Regional Mobility Authority (MA) in conjunction with the 183 North Mobility Environmental Assessment.

SWCA®
ENVIRONMENTAL CONSULTANTS
Sound Science. Creative Solutions.®

Geologic Assessment of the 183 North Mobility Project, Travis and Williamson Counties, Texas

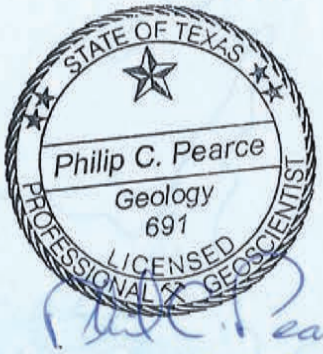

9-2-2015

Prepared for

CP&Y

on behalf of

The Central Texas Regional Mobility Authority

Prepared by

SWCA Environmental Consultants

Texas Board of Professional Geoscientists Firm Registration No. 50159

July 2, 2015
Revised September 2, 2015

SWCA Project Number 25572-AUS

This page intentionally left blank

GEOLOGIC ASSESSMENT OF THE 183 NORTH MOBILITY PROJECT, TRAVIS AND WILLIAMSON COUNTIES, TEXAS

Prepared for

CP&Y
13809 Research Blvd., No. 300
Austin, Texas 78750
Attn: Mr. Andy Atlas, Vice President
(512) 241-2210

on behalf of

CENTRAL TEXAS REGIONAL MOBILITY AUTHORITY
3300 N IH-35, Suite 300
Austin, Texas 78705
Attn: Mr. Sean Beal, P.E., Engineering Manager
(512) 996-9778

Prepared by

SWCA ENVIRONMENTAL CONSULTANTS
4407 Monterey Oaks Boulevard
Building 1, Suite 110
Austin, Texas 78749
Texas Board of Professional Geoscientists Firm Registration No. 50159
www.swca.com

SWCA Project Number 25572-AUS

July 2, 2015
Revised September 2, 2015

This page intentionally left blank.

TABLE OF CONTENTS

INTRODUCTION 2
METHODOLOGY 2
RESULTS 2
Site Overview 2
Geology 4
Soils 4
Site Hydrogeologic Assessment 4
REFERENCES 10

LIST OF FIGURES

Figure 1. Project Area Location Map. 3
Figure 2. Stratigraphic Column within Project Area. 5
Figure 3a. Soil Units Map of the Northern Section of the Project Area. 6
Figure 3b. Soil Units Map of the Central Section of the Project Area. 7
Figure 3c. Soil Units Map of the Southern Section of the Project Area. 8

APPENDICES

Appendix A: TCEQ Forms
Appendix B: Site Geologic Map

INTRODUCTION

This narrative Geologic Assessment accompanies the Texas Commission on Environmental Quality (TCEQ) Geologic Assessment form TCEQ-0585 (Appendix A) completed for the 183 North Mobility Project (Project). This study was prepared for CP&Y and the Central Texas Regional Mobility Authority (CTRMA).

Proposed Project activities involve a total of approximately 724.6 acres; 714.2 acres of existing right-of-way (ROW), 8.0 acres of proposed ROW, and 2.4 acres of existing easements, as shown in Figure 1 (Project Area).

METHODOLOGY

Registered professional geologists with SWCA Environmental Consultants (SWCA) conducted a field survey of the Project Area for a Geologic Assessment from September 2013 to February 2014, and on 10 October 2014 and 19 March 2015. The pedestrian survey was completed by walking parallel transects spaced approximately 50 feet apart as directed by the TCEQ in the Instructions to Geologists for Geologic Assessments on the Edwards Aquifer Recharge/Transition Zones (Rev. 10-01-04). Closer spacing was used where vegetation inhibited clear observation. All potential karst features, including depressions, holes, and animal burrows, were carefully examined for evidence of subsurface extent. A number of techniques were used for this effort, including probing with a digging implement to determine the thickness and consistency of fill material and feeling for the presence of air flow, which may indicate the presence of a sub-surface void space. Other techniques included making observations of any notable characteristics of the feature site such as the presence of various types of vegetation or a semi-circular burrow mound produced by the activities of small mammals.

RESULTS

Site Overview

Approximately 75 percent of the Project Area is located within the Edwards Aquifer Recharge Zone. A small portion of the Project Area is located within the Edwards Aquifer Transition Zone where U.S. Highway 183 (US 183) extends east of the intersection with MoPac. Topographically, the portion of the Project Area associated with US 183 occurs atop the Edwards Plateau within an area locally known as the Jollyville Plateau area at elevations ranging between 975 and 900 feet above mean sea level. The southern end of the Project Area associated with the MoPac segment exits the plateau and occurs at lower elevations between 800 and 650 feet above mean sea level. Vegetation on the Project Area consists mostly of mowed and maintained assorted grasses within the ROW.

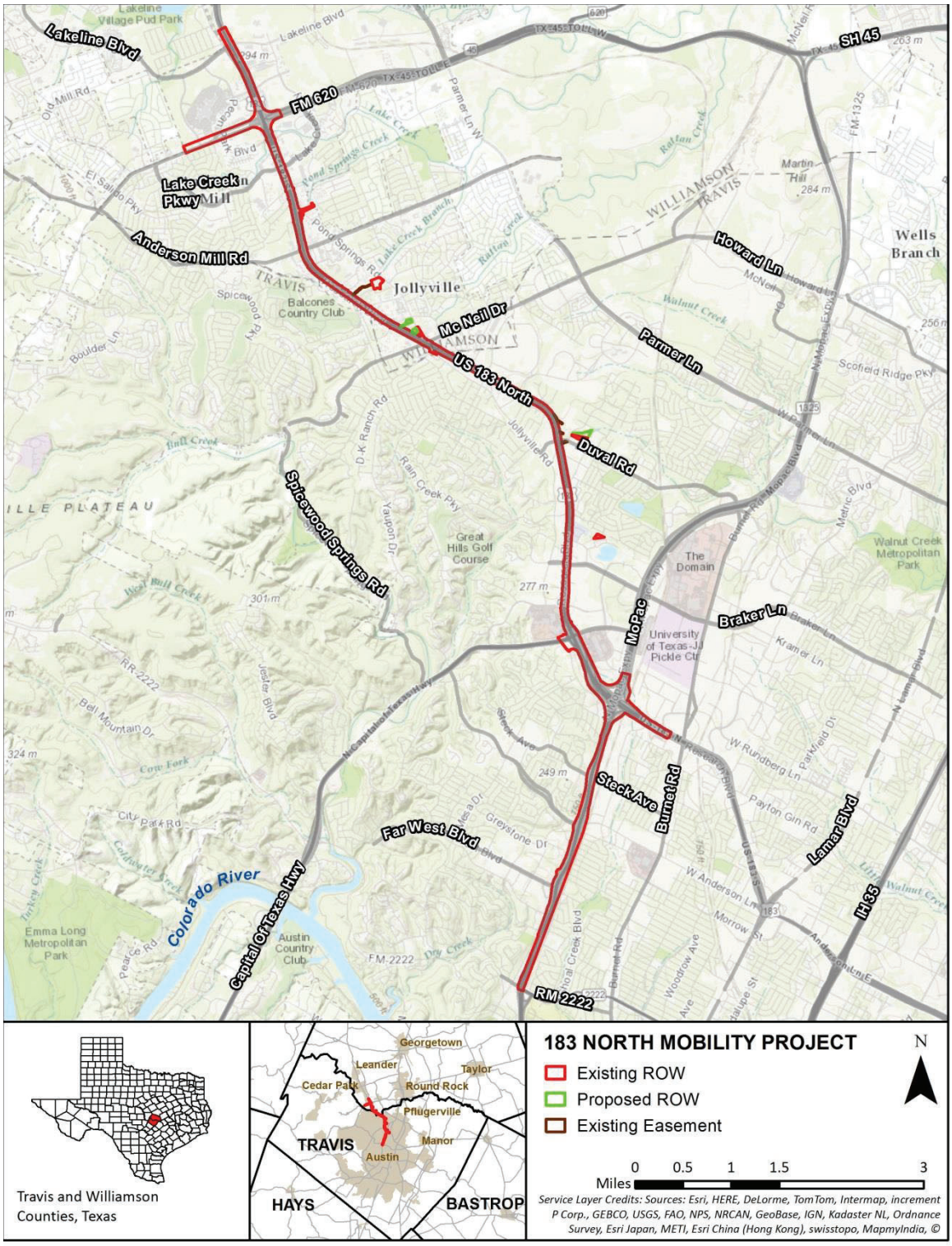

Figure 1. Project Area Location Map.

Geology

The Edwards Formation is exposed at the surface within the US 183 segment of the Project Area. At the US 183 and MoPac interchange, the Project Area enters the Balcones Fault Zone (a series of geologic faults associated with the western edge of the Edwards Plateau) and eventually crosses off of the Edwards Plateau. The outcropping geologic formations for the MoPac segment of the Project Area is a mix of Edwards Formation, Walnut Formation, Austin Chalk, Buda Limestone, Eagle Ford Group, and Tributary Terrace deposits. A Stratigraphic Column is presented as Figure 2. A Site Geologic Map is presented in Appendix B.

Recharge into the Edwards Aquifer primarily occurs in areas where the Edwards Group is exposed at the surface. Most recharge is from direct infiltration via precipitation and streamflow loss. Recharge occurs predominantly along secondary porosity features such as faults, fractures, and karst features (caves, solution cavities, sinkholes, etc.). Karst features are commonly formed along joints, fractures, and bedding plane surfaces in the Edwards Group.

Soils

Soils in the Project Area consist of nine different series of soils. Austin, Brackett, San Saba, Speck, Tarrant, Volente, and Whitewright series soils are within the hydrologic soil group "C" classification. Type "C" soils have a slow infiltration rate when thoroughly wetted. Crawford, Eckrant, Fairlie, and Georgetown series soils are within the hydrologic soil group "D" classification. Type "D" soils have a very slow infiltration rate when thoroughly wetted. Soil units are displayed on Figures 3a, 3b, and 3c.

Site Hydrogeologic Assessment

The likelihood of recharge from the Project Area contributing to the main body of the aquifer is thought to be low to moderate. No point source karst features were identified on site and impervious cover and fill material cover much of the site. Multiple faults cross the project site, primarily within the Transition Zone.

Upper Cretaceous	Upper Confining Units	Navarro and Taylor Groups, undivided; 600 feet thick
		Austin Group; 325-420 feet thick
		Eagle Ford Group; 25-65 feet thick
		Buda Limestone; 40-50 feet thick
		Del Rio Clay; 40-70 feet thick
Lower Cretaceous	Edwards Aquifer	Georgetown Formation; 30-80 feet thick
		Edwards Limestone; Up to 200 feet thick
		Comanche Peak Formation; 80 feet thick
	Lower Confining Units	Walnut Formation; Up to 120 feet thick
		Upper member of Glen Rose Limestone; 500 feet thick

Note: The shaded areas represent the lithology that outcrops on the Project Area.

Figure 2. Stratigraphic Column within Project Area.

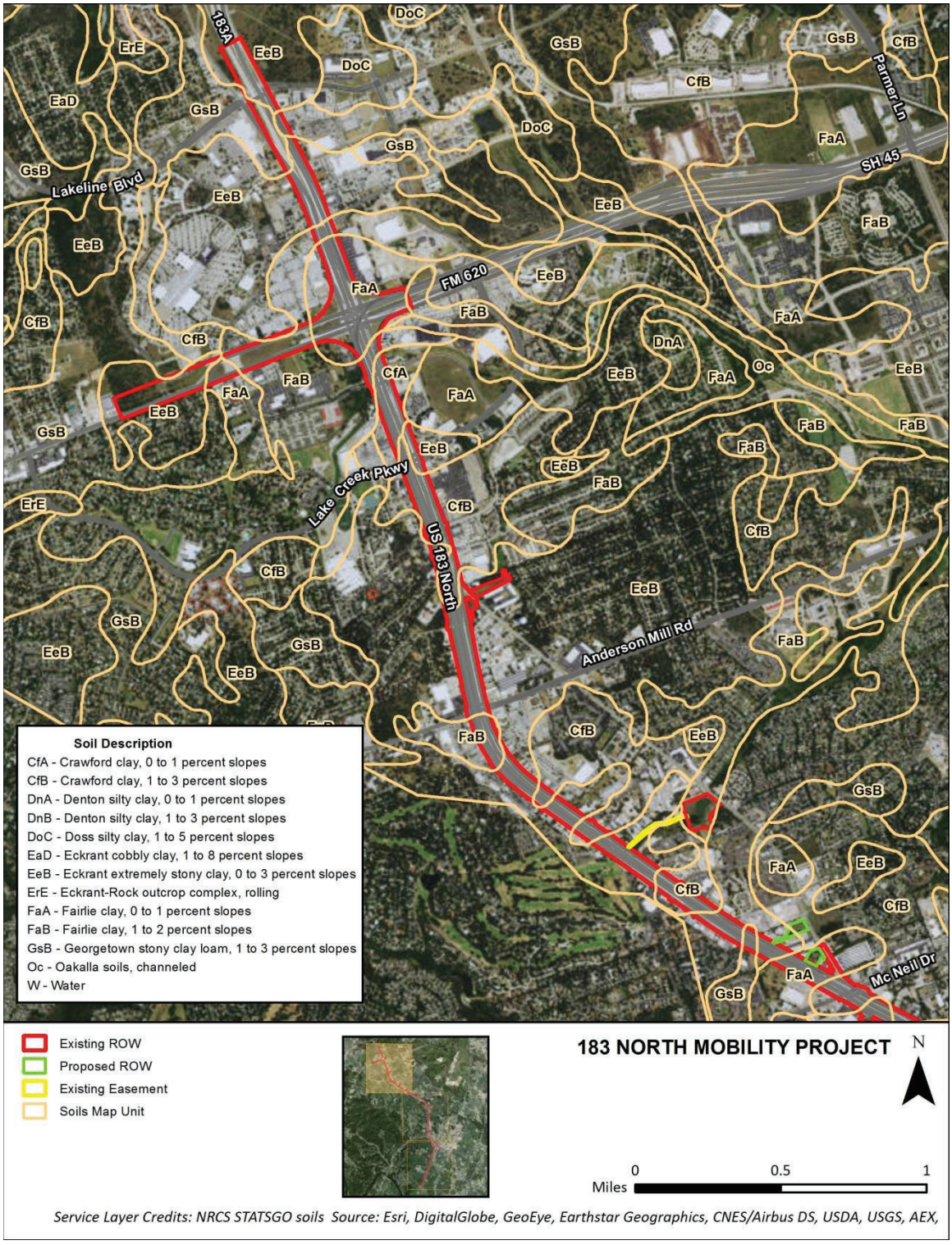

Figure 3a. Soil Units Map of the Northern Section of the Project Area.

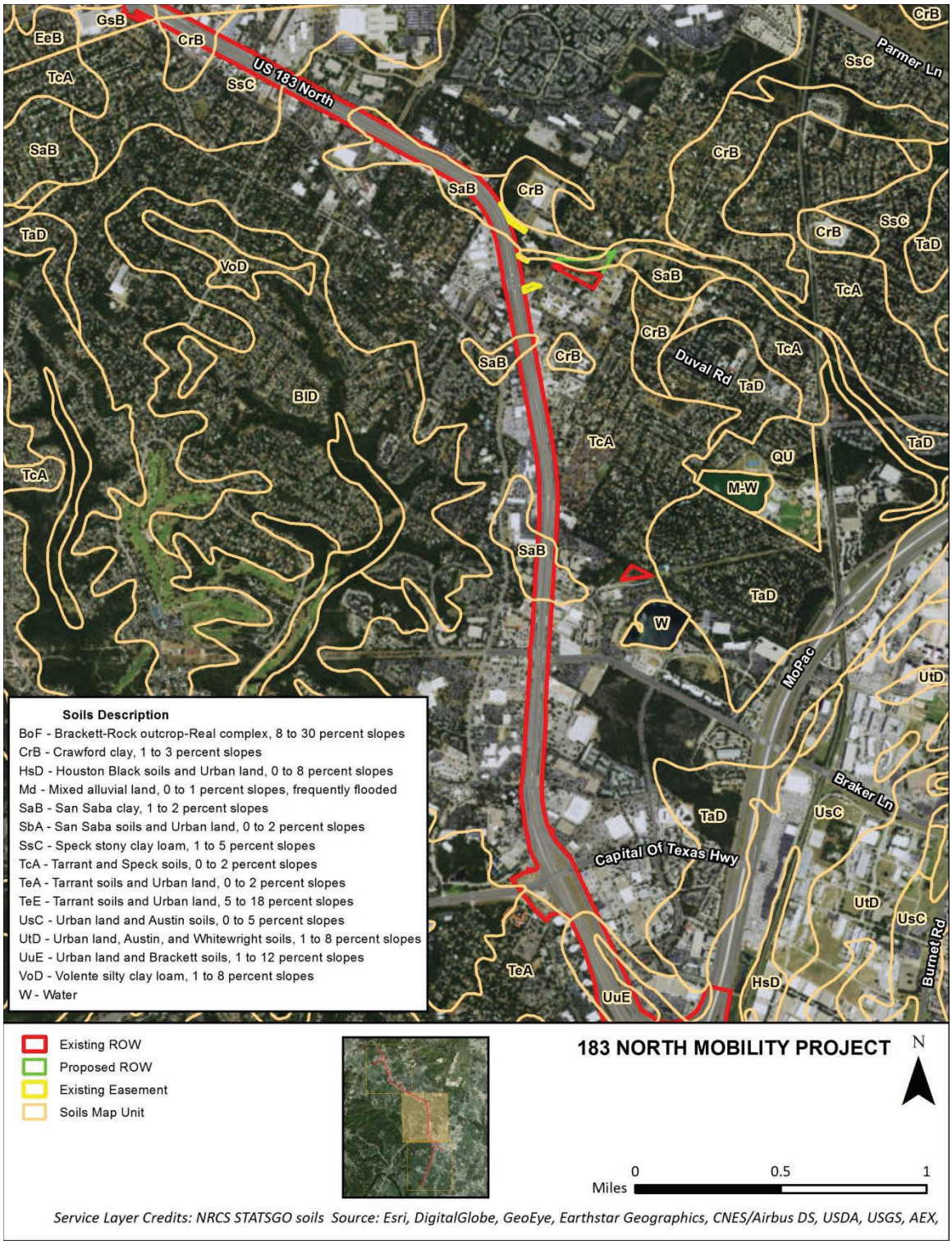

Figure 3b. Soil Units Map of the Central Section of the Project Area.

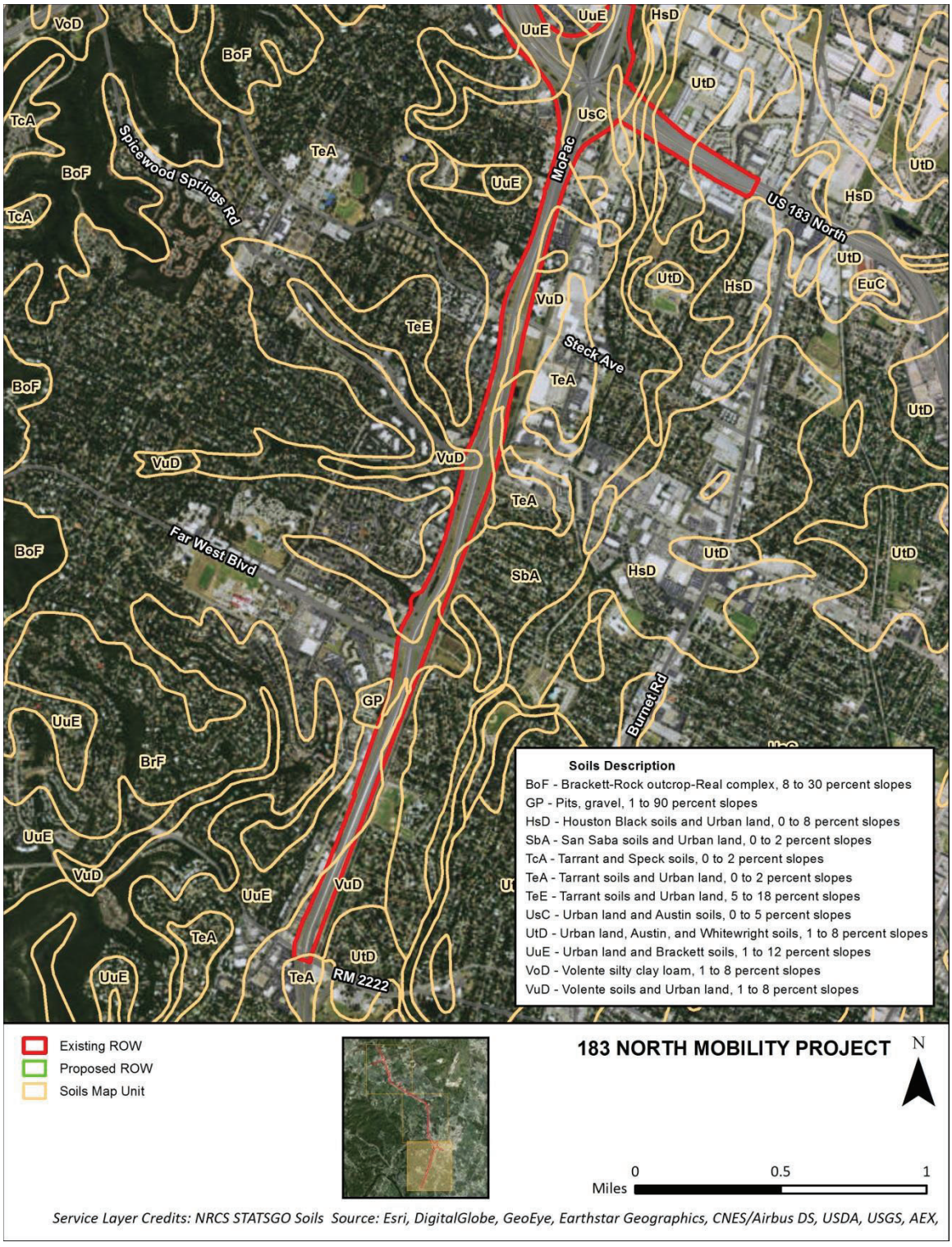

Figure 3c. Soil Units Map of the Southern Section of the Project Area.

Feature Descriptions
Feature locations are displayed on the Site Geologic Map (Appendix B) and are described on the Geologic Assessment Table (Appendix A).

F-1 **Fault.** The feature consists of an inferred fault trending approximately N25˚E as mapped by Garner and Young (1976). No evidence of this fault was observed in the field. The probability of rapid infiltration along this fault within the project is considered low due to the extent of existing impervious cover and graded developments.

F-2 **Cave.** The feature consists of a cave, referred to as Jug Cave, which was sealed during the construction of US 183 and has been covered by construction-related soils and fill. It is considered destroyed by the USFWS (Berkhouse 2005).

F-3 **Fault.** The feature consists of a fault trending approximately N15˚E as mapped by Garner and Young (1976). No evidence of this fault was observed in the field. The probability of rapid infiltration along this fault within the Project Area is considered low due to the extent of existing impervious cover and graded developments.

F-4 This feature was omitted from this report because it lies outside the proposed ROW.

F-5 **Fault.** The feature was omitted from this report because it lies outside the area regulated by TCEQ. The feature consists of a fault trending approximately N20˚E as mapped by Garner and Young (1976). No evidence of this fault was observed in the field. The probability of rapid infiltration along this fault within the Project Area is considered low due to the extent of existing impervious cover and graded developments.

F-6 **Fault.** The feature was omitted from this report because it lies outside the area regulated by TCEQ. The feature consists of a fault trending approximately N40˚E as mapped by Garner and Young (1976). No evidence of this fault was observed in the field. The probability of rapid infiltration along this fault within the Project Area is considered low due to the extent of existing impervious cover and graded developments.

F-7 **Sanitary Sewer Line.** The feature consists of a network of City of Austin sanitary sewer lines. Approximately 25 sanitary sewer lines occur within the project area. The sewer lines occur primarily beneath impervious cover and areas overlain by fill material and landscaped areas. Therefore, the probability of rapid infiltration is considered low.

REFERENCES

Berkhouse, C. 2005. *Summary of Information for Assessing the Status of the Tooth Cave Ground Beetle (*Rhadine persephone*).* Prepared by HNTB for USFWS Region 2, Austin Ecological Services Field Office. 75pp.

Garner, L.E. and K.P. Young. 1976. *Environmental Geology of the Austin Area: An Aid to Urban Planning.* Report of Investigations RI-86, USGS.

APPENDIX A

TCEQ FORMS

Geologic Assessment

Texas Commission on Environmental Quality

For Regulated Activities on The Edwards Aquifer Recharge/transition Zones and Relating to 30 TAC §213.5(b)(3), Effective June 1, 1999

To ensure that the application is administratively complete, confirm that all fields in the form are complete, verify that all requested information is provided, consistently reference the same site and contact person in all forms in the application, and ensure forms are signed by the appropriate party.

Note: Including all the information requested in the form and attachments contributes to more streamlined technical reviews.

Signature

To the best of my knowledge, the responses to this form accurately reflect all information requested concerning the proposed regulated activities and methods to protect the Edwards Aquifer. My signature certifies that I am qualified as a geologist as defined by 30 TAC Chapter 213.

Print Name of Geologist: Philip C. Pearce Telephone: 210.877.2847

Date: 7.1.2015 Fax: 210.877.2848

Representing: SWCA Environmental Consultants (TBPG Registration Number 51509)

Signature of Geologist:



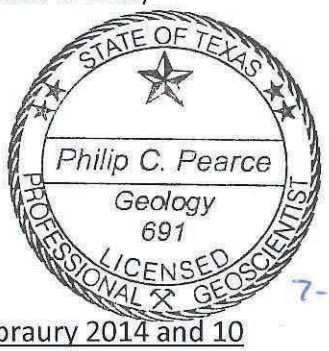

7-15-15

Regulated Entity Name: 183 North Mobility Project

Project Information

1. Date(s) Geologic Assessment was performed: September 2013 to Febraury 2014 and 10 October 2014
2. Type of Project:
   - ☒ WPAP
   - ☐ SCS
   - ☐ AST
   - ☐ UST
3. Location of Project:
   - ☒ Recharge Zone
   - ☐ Transition Zone
   - ☐ Contributing Zone within the Transition Zone

4. ☒ **Attachment A - Geologic Assessment Table**. Completed Geologic Assessment Table (Form TCEQ-0585-Table) is attached.

5. ☒ Soil cover on the project site is summarized in the table below and uses the SCS Hydrologic Soil Groups* (Urban Hydrology for Small Watersheds, Technical Release No. 55, Appendix A, Soil Conservation Service, 1986). If there is more than one soil type on the project site, show each soil type on the site Geologic Map or a separate soils map.

Table 1 - Soil Units, Infiltration Characteristics and Thickness

Soil Name	Group*	Thickness(feet)
Austin	C	3
Brackett	C	1.5
Crawford	D	3
Eckrant	D	1-1.5
Fairlie	D	3
Georgetown	D	2-3
San Saba	C	3
Speck	C	3
Tarrant	C	1
Urban Land	N/A	N/A
Volente	C	3-4
Whitewright	C	1.5

** Soil Group Definitions (Abbreviated)*

A. Soils having a high infiltration rate when thoroughly wetted.

B. Soils having a moderate infiltration rate when thoroughly wetted.

C. Soils having a slow infiltration rate when thoroughly wetted.

D. Soils having a very slow infiltration rate when thoroughly wetted.

6. ☒ **Attachment B – Stratigraphic Column**. A stratigraphic column showing formations, members, and thicknesses is attached. The outcropping unit, if present, should be at the top of the stratigraphic column. Otherwise, the uppermost unit should be at the top of the stratigraphic column.

7. ☒ **Attachment C – Site Geology**. A narrative description of the site specific geology including any features identified in the Geologic Assessment Table, a discussion of the potential for fluid movement to the Edwards Aquifer, stratigraphy, structure(s), and karst characteristics is attached.

8. ☒ **Attachment D – Site Geologic Map(s)**. The Site Geologic Map must be the same scale as the applicant's Site Plan. The minimum scale is 1": 400'

   Applicant's Site Plan Scale: 1" = N/A' Site
   Geologic Map Scale: 1" = 1320'
   Site Soils Map Scale (if more than 1 soil type): 1" = 1320'

9. Method of collecting positional data:

   ☒ Global Positioning System (GPS) technology.
   ☐ Other method(s). Please describe method of data collection: _____

10. ☒ The project site and boundaries are clearly shown and labeled on the Site Geologic Map.

11. ☒ Surface geologic units are shown and labeled on the Site Geologic Map.

12. ☒ Geologic or manmade features were discovered on the project site during the field investigation. They are shown and labeled on the Site Geologic Map and are described in the attached Geologic Assessment Table.

    ☐ Geologic or manmade features were not discovered on the project site during the field investigation.

13. ☒ The Recharge Zone boundary is shown and labeled, if appropriate.

14. All known wells (test holes, water, oil, unplugged, capped and/or abandoned, etc.): If applicable, the information must agree with Item No. 20 of the WPAP Application Section.

    ☐ There are_____(#) wells present on the project site and the locations are shown and labeled. (Check all of the following that apply.)
    ☐ The wells are not in use and have been properly abandoned. The
    ☐ wells are not in use and will be properly abandoned.
    ☐ The wells are in use and comply with 16 TAC Chapter 76.
    ☒ There are no wells or test holes of any kind known to exist on the project site.

Administrative Information

15. ☒ Submit one (1) original and one (1) copy of the application, plus additional copies as needed for each affected incorporated city, groundwater conservation district, and county in which the project will be located. The TCEQ will distribute the additional copies to these jurisdictions. The copies must be submitted to the appropriate regional office.

GEOLOGIC ASSESSMENT TABLE

PROJECT NAME: 183 North Mobility Project

LOCATION			FEATURE CHARACTERISTICS												EVALUATION			PHYSICAL SETTING		
1A	1B *	1C*	2A	2B	3	4			5	5A	6	7	8A	8B	9	10		11		12
FEATURE ID	LATITUDE	LONGITUDE	FEATURE TYPE	POINTS	FORMATION	DIMENSIONS (FEET)			TREND (DEGREES)	MOD	DENSITY (NO/FT)	APERTURE (FEET)	INFILL	RELATIVE INFILTRATION RATE	TOTAL	SENSITIVITY		CATCHMENT AREA (ACRES)		TOPOGRAPHY
						X	Y	Z		10						<40	>40	<1.6	>1.6	
F-1	30.474683	-97.799472	F	20	Ked	500+			N25E	10			V,X	5	35	X			X	Hillside
F-2	30.47338	-97.798562	C	30	Ked	unknown				0			X	5	35	X		X		Hillside
F-3	30.373685	-97.740128	F	20	Ked/Kau	10,000+			N15E	10			V,X	5	35	X			X	Hillside
F-4	Omitted - Outside Proposed ROW																			
F-5	Omitted - Outside Recharge Zone																			
F-6	Omitted - Outside Recharge Zone																			
F-7	30.351834	-97.748952	MB	30	Ked	--				0			X	5	35	X			X	Hillside

* DATUM: NAD83

2A TYPE	TYPE	2B POINTS
C	Cave	30
SC	Solution cavity	20
SF	Solution-enlarged fracture(s)	20
F	Fault	20
O	Other natural bedrock features	5
MB	Manmade feature in bedrock	30
SW	Swallow hole	30
SH	Sinkhole	20
CD	Non-karst closed depression	5
Z	Zone, clustered or aligned features	30

8A INFILLING

N	None, exposed bedrock
C	Coarse - cobbles, breakdown, sand, gravel
O	Loose or soft mud or soil, organics, leaves, sticks, dark colors
F	Fines, compacted clay-rich sediment, soil profile, gray or red colors
V	Vegetation. Give details in narrative description
FS	Flowstone, cements, cave deposits
X	Other materials

12 TOPOGRAPHY

Cliff, Hilltop, Hillside, Drainage, Floodplain, Streambed

I have read, I understood, and I have followed the Texas Commission on Environmental Quality's Instructions to Geologists. The information presented here complies with that document and is a true representation of the conditions observed in the field.

My signature certifies that I am qualified as a geologist as defined by 30 TAC Chapter 213.

Philip C. Pearce

STATE OF TEXAS
Philip C. Pearce
Geology
691
LICENSED
PROFESSIONAL GEOSCIENTIST

9-2-2015

TCEQ-0585 (Rev. 10-01-10)

APPENDIX B

SITE GEOLOGIC MAP

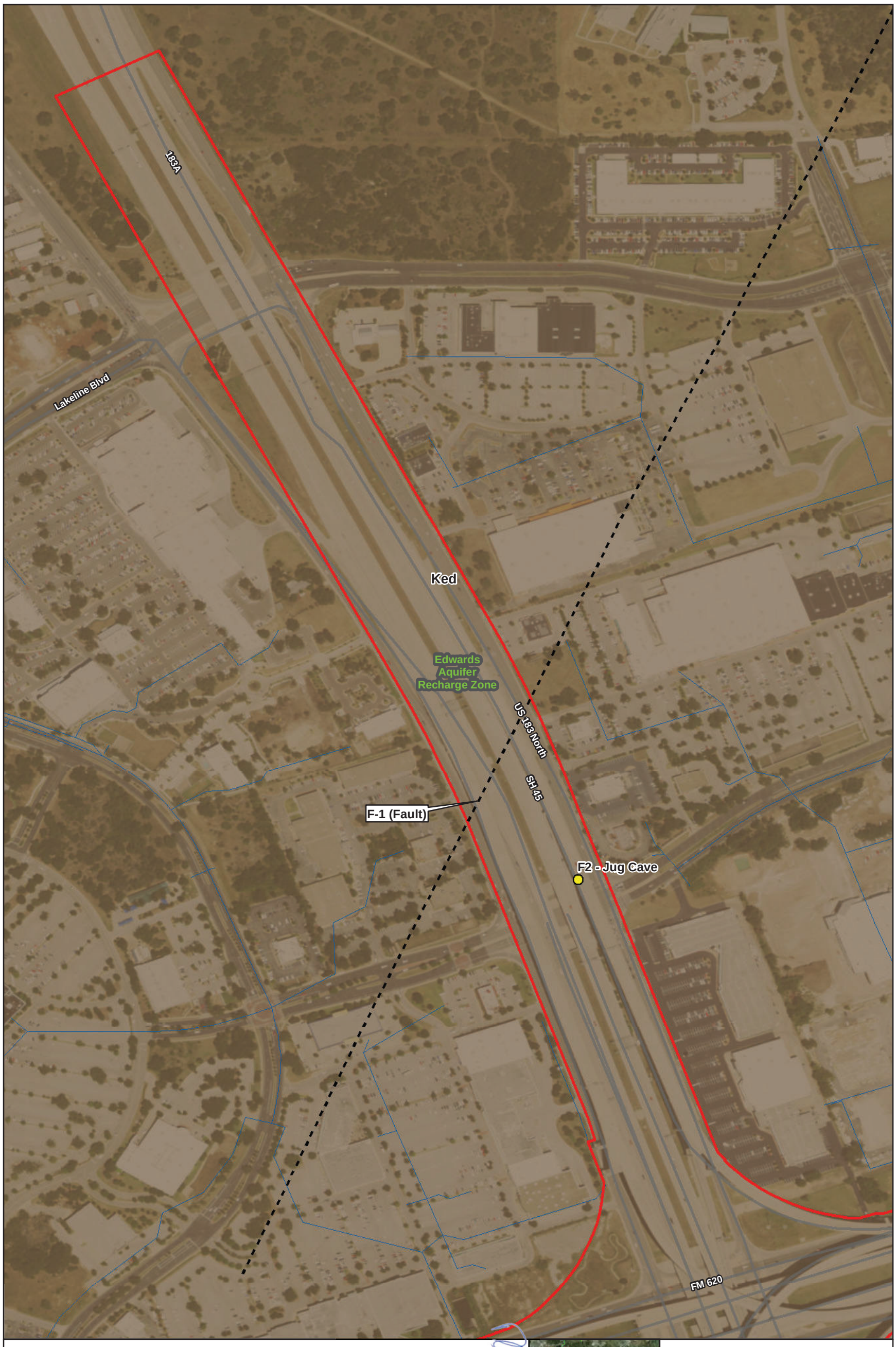
183A
Lakeline Blvd
Ked
Edwards
Aquifer
Recharge Zone
US 183 North
SH 45
F-1 (Fault)
F2 - Jug Cave
FM 620
Existing ROW
Proposed ROW
Existing Easement
Fault (Approximate)
Geologic Feature
Sewer Lines
Garner and Young (1976)
Ked - Edwards Limestone
Edwards Aquifer Recharge Zone (TCEQ Regulatory)
Philip C. Pearce
Geology
691
9-4-15
STATE OF TEXAS
LICENSED PROFESSIONAL GEOSCIENTIST
Service Layer Credits: UTBEG Geologic Map of the Austin Texas Area Source: Esri, DigitalGlobe, GeoEye, Earthstar Geographics, CNES/Airbus DS, USDA, USGS, AEX, Getmapping, Aerogrid, IGN, and the GIS User Community
183 NORTH MOBILITY PROJECT
Site Geologic Map
Page 1 of 17
N
0 100 200 300 400
Feet



Existing ROW
Proposed ROW
Existing Easement
Drainage
Fault (Approximate)
Sewer Lines

Garner and Young (1976)
Ked - Edwards Limestone
Edwards Aquifer Recharge Zone (TCEQ Regulatory)

PROFESSIONAL LICENSED GEOSCIENTIST
Philip C. Pearce
Geology
691
STATE OF TEXAS
9-4-15

Service Layer Credits: UTBEG Geologic Map of the Austin Texas Area Source: Esri, DigitalGlobe, GeoEye, Earthstar Geographics, CNES/Airbus DS, USDA, USGS, AEX, Getmapping, Aerogrid, IGN, IGP, swisstopo, and the GIS User Community

183 NORTH MOBILITY PROJECT
Site Geologic Map
Page 2 of 17

N

0 100 200 300 400
Feet



Existing ROW
Proposed ROW
Existing Easement
Drainage
Fault (Approximate)
Sewer Lines

Garner and Young (1976)
Ked - Edwards Limestone
Edwards Aquifer Recharge Zone (TCEQ Regulated)

PROFESSIONAL LICENSED GEOSCIENTIST
Philip C. Pearce
Geology
691
STATE OF TEXAS
9-4-15

Service Layer Credits: UTBEG Geologic Map of the Austin Texas Area Source: Esri, DigitalGlobe, GeoEye, Earthstar Geographics, CNES/Airbus DS, USDA, USGS, AEX, Getmapping, Aerogrid, IGN, IGP, swisstopo, and the GIS User Community

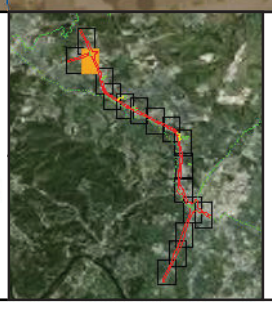

183 NORTH MOBILITY PROJECT
Site Geologic Map
Page 3 of 17

N

0 100 200 300 400
Feet

F-7 (MB)

Ked

Edwards Aquifer Recharge Zone

US 183 North

Anderson Mill Rd

Existing ROW
Proposed ROW
Existing Easement
Drainage
Sewer Lines

Garner and Young (1976)
Ked - Edwards Limestone
Edwards Aquifer Recharge Zone (TCEQ Regulatory)

Philip C. Pearce
Geology
691
9-4-15
STATE OF TEXAS
LICENSED PROFESSIONAL GEOSCIENTIST

Service Layer Credits: UTBEG Geologic Map of the Austin Texas Area Source: Esri, DigitalGlobe, GeoEye, Earthstar Geographics, CNES/Airbus DS, USDA, USGS, AEX, Getmapping, Aerogrid, IGN, IGP, swisstopo, and the GIS User Community

183 NORTH MOBILITY PROJECT
Site Geologic Map
Page 4 of 17

N

0 100 200 300 400
Feet



Existing ROW
Proposed ROW
Existing Easement
Drainage
Sewer Lines

Garner and Young (1976)
Kcp - Cedar Park Limestone
Ked - Edwards Limestone
Edwards Aquifer Recharge Zone (TCEQ Regulatory)

Philip C. Pearce
Geology
691
LICENSED PROFESSIONAL GEOSCIENTIST
STATE OF TEXAS
9-4-15

Service Layer Credits: UTBEG Geologic Map of the Austin Texas Area Source: Esri, DigitalGlobe, GeoEye, Earthstar Geographics, CNES/Airbus DS, USDA, USGS, AEX, Getmapping, Aerogrid, IGN, IGP, swisstopo, and the GIS User Community

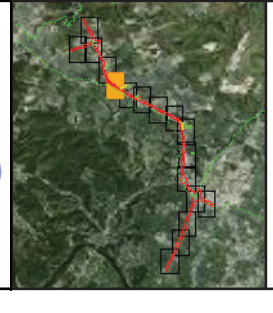

183 NORTH MOBILITY PROJECT
Site Geologic Map
Page 5 of 17

N

0 100 200 300 400
Feet

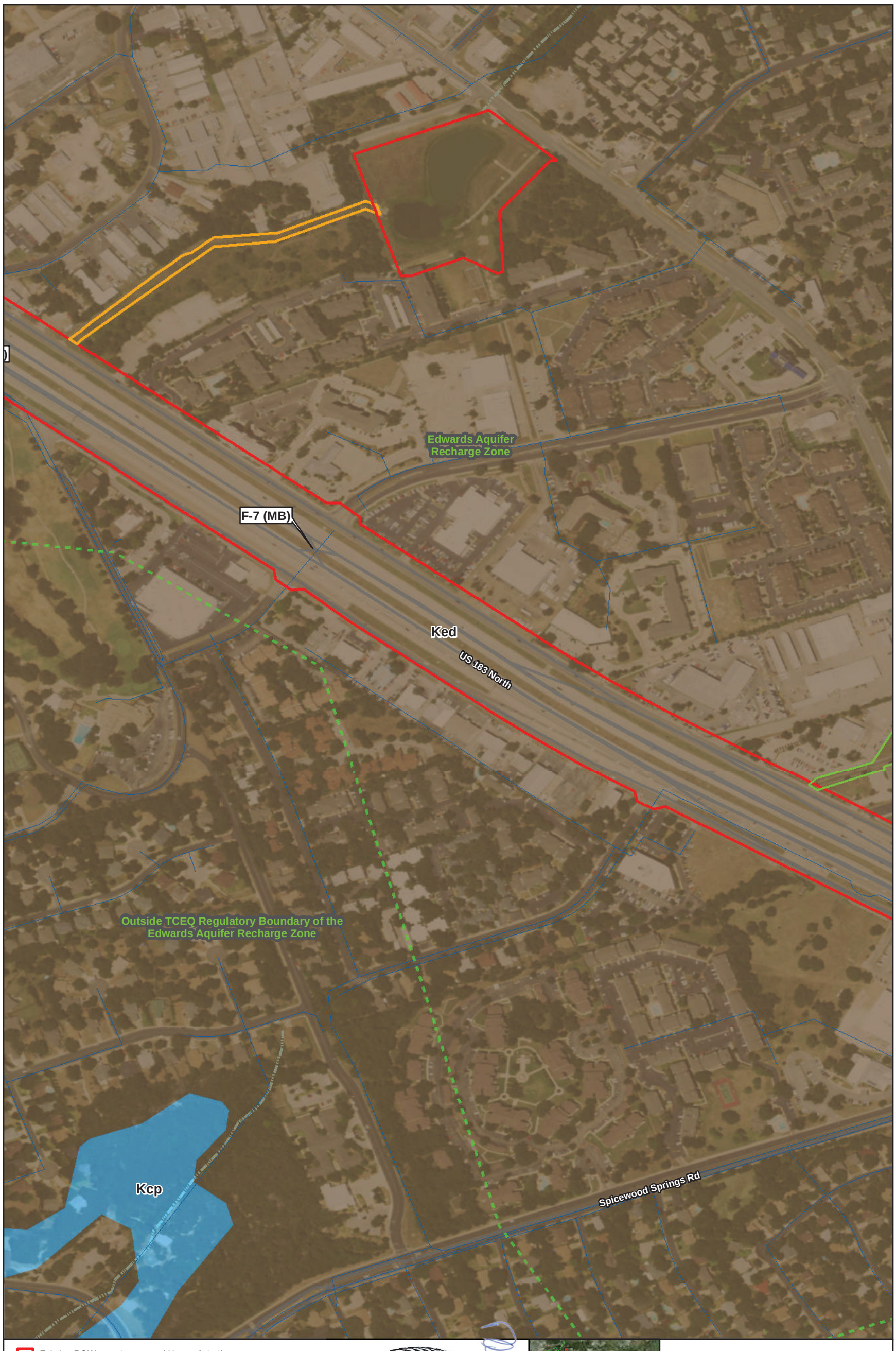

Existing ROW
Proposed ROW
Existing Easement
Drainage
Sewer Lines

Garner and Young (1976)
Kcp - Cedar Park Limestone
Ked - Edwards Limestone
Edwards Aquifer Recharge Zone (TCEQ Regulation)

STATE OF TEXAS
Philip C. Pearce
Geology
691
9-4-15
PROFESSIONAL LICENSED GEOSCIENTIST

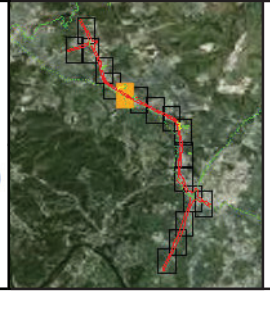

Service Layer Credits: UTBEG Geologic Map of the Austin Texas Area Source: Esri, DigitalGlobe, GeoEye, Earthstar Geographics, CNES/Airbus DS, USDA, USGS, AEX, Getmapping, Aerogrid, IGN, IGP, Swisstopo, and the GIS User Community

183 NORTH MOBILITY PROJECT
Site Geologic Map
Page 6 of 17

N

0 100 200 300 400
Feet


Rattan Creek
Edwards
Aquifer
Recharge Zone
Ked
Mc Neil Dr
US 183 North
Spicewood Springs Rd
F-7 (MB)
Outside TCEQ Regulatory Boundary of the
Edwards Aquifer Recharge Zone
Existing ROW
Proposed ROW
Existing Easement
Drainage
Sewer Lines
Garner and Young (1976)
Ked - Edwards Limestone
Edwards Aquifer Recharge Zone (TCEQ Regulator
Philip C. Pearce
Geology
691
STATE OF TEXAS
LICENSED
PROFESSIONAL
GEOSCIENTIST
9-4-15
Service Layer Credits: UTBEG Geologic Map of the Austin Texas Area Source: Esri, DigitalGlobe, GeoEye, Earthstar Geographics, CNES/Airbus DS, USDA,
USGS, AEX, Getmapping, Aerogrid, IGN, IGN, swisstopo, and the GIS User Community
183 NORTH MOBILITY PROJECT
Site Geologic Map
Page 7 of 17
N
0 100 200 300 400
Feet

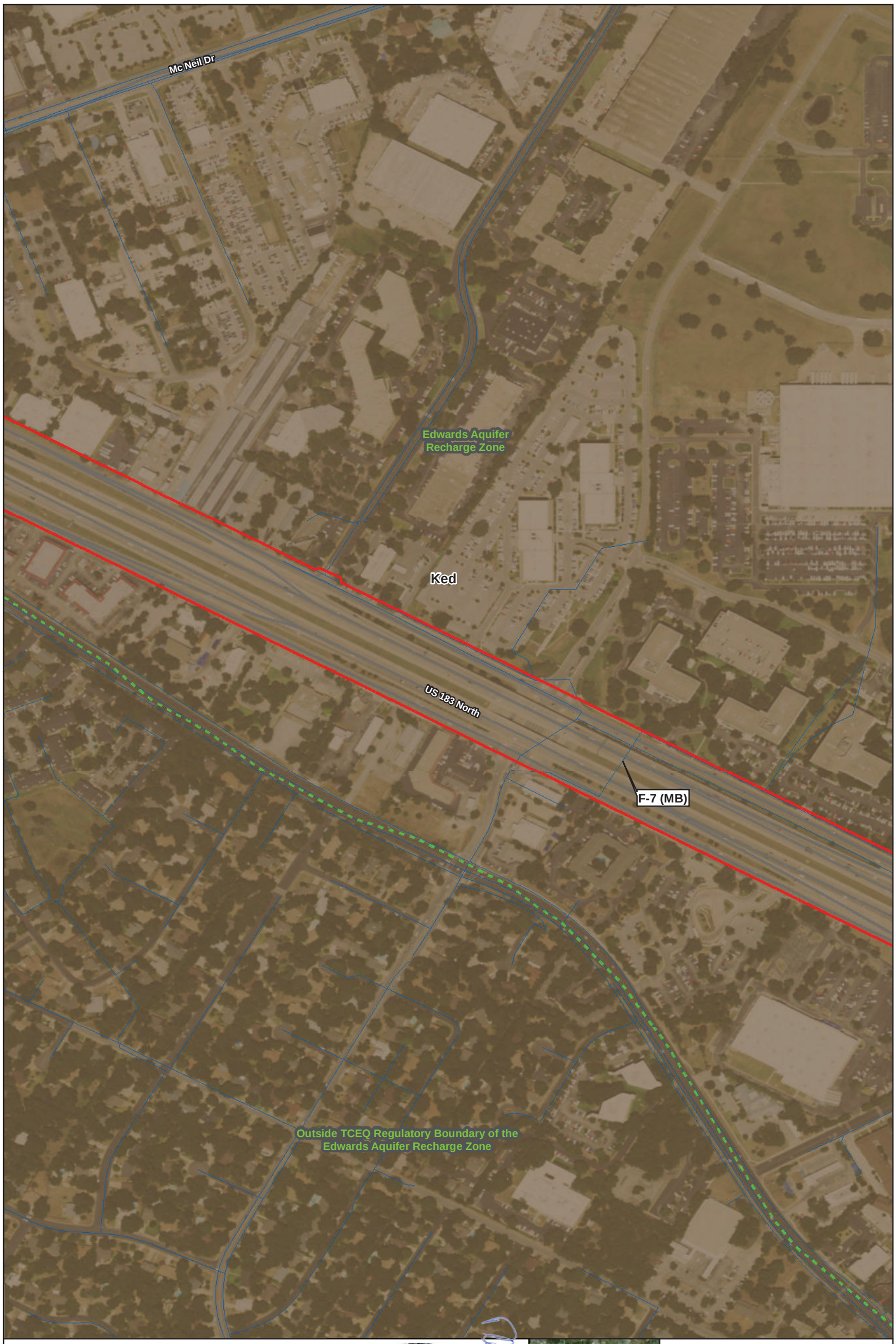
Mc Neil Dr
Edwards Aquifer
Recharge Zone
Ked
US 183 North
F-7 (MB)
Outside TCEQ Regulatory Boundary of the
Edwards Aquifer Recharge Zone
Existing ROW
Proposed ROW
Existing Easement
Sewer Lines
Garner and Young (1976)
Ked - Edwards Limestone
Edwards Aquifer Recharge Zone (TCEQ Regulator
Philip C. Pearce
Geology
691
9-4-15
STATE OF TEXAS
LICENSED
PROFESSIONAL
GEOSCIENTIST
Service Layer Credits: UTBEG Geologic Map of the Austin Texas Area Source: Esri, DigitalGlobe, GeoEye, Earthstar Geographics, CNES/Airbus DS, USDA, USGS, AEX, Getmapping, Aerogrid, IGN, IGN, and the GIS User Community
183 NORTH MOBILITY PROJECT
Site Geologic Map
Page 8 of 17
N
0 100 200 300 400
Feet

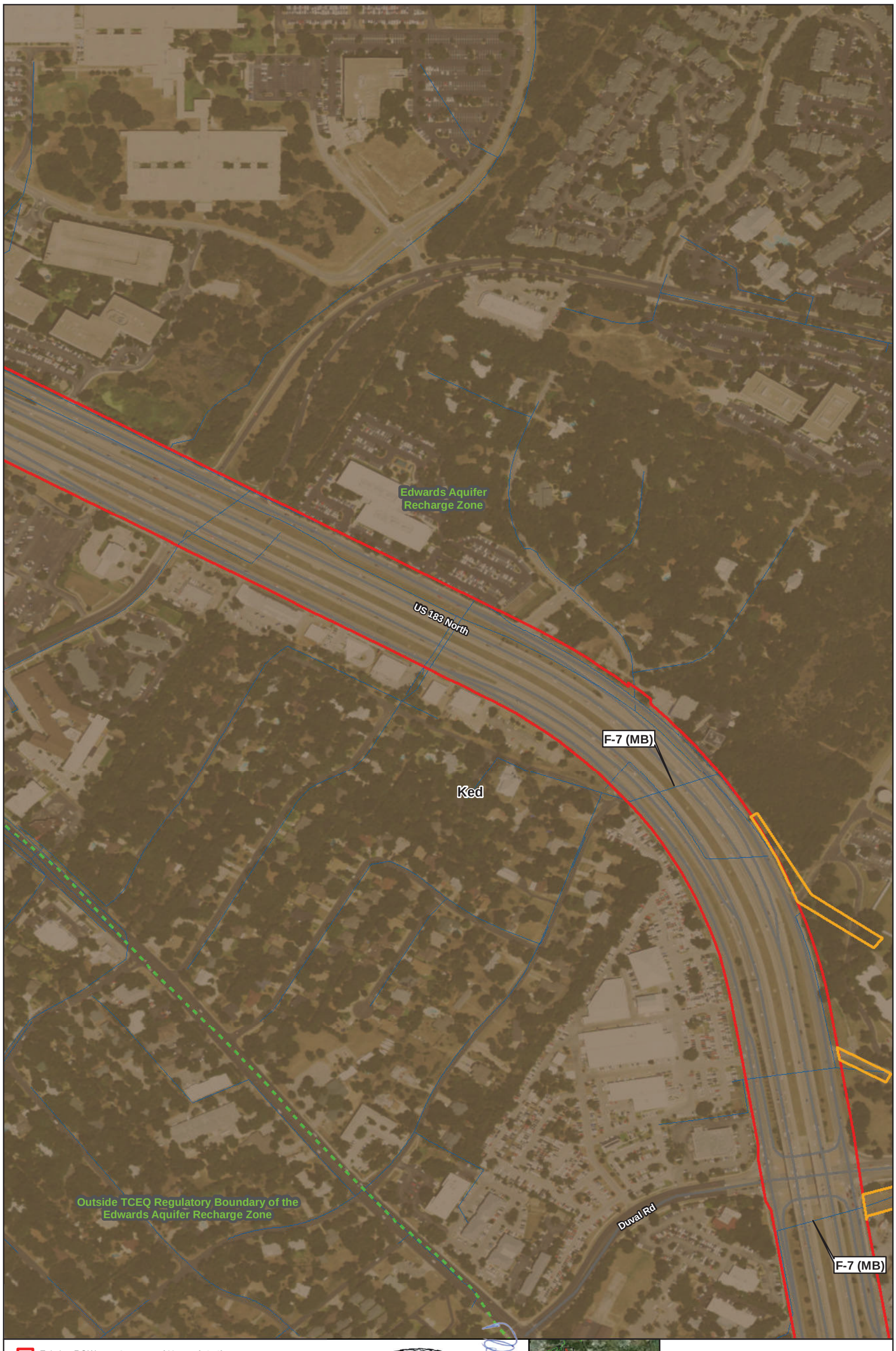

Existing ROW
Proposed ROW
Existing Easement
Sewer Lines

Garner and Young (1976)
Ked - Edwards Limestone
Edwards Aquifer Recharge Zone (TCEQ Regulatory)

PROFESSIONAL LICENSED GEOSCIENTIST
Philip C. Pearce
Geology
691
9-4-15
STATE OF TEXAS

Service Layer Credits: UTBEG Geologic Map of the Austin Texas Area Source: Esri, DigitalGlobe, GeoEye, Earthstar Geographics, CNES/Airbus DS, USDA, USGS, AEX, Getmapping, Aerogrid, IGN, IGP, swisstopo, and the GIS User Community

183 NORTH MOBILITY PROJECT
Site Geologic Map
Page 9 of 17

N

0 100 200 300 400
Feet



Existing ROW
Proposed ROW
Existing Easement
Drainage
Sewer Lines

Garner and Young (1976)
Kcp - Cedar Park Limestone
Ked - Edwards Limestone
Edwards Aquifer Recharge Zone (TCEQ Regulatory)

STATE OF TEXAS
Philip C. Pearce
Geology
691
LICENSED
PROFESSIONAL
GEOSCIENTIST
9-4-15

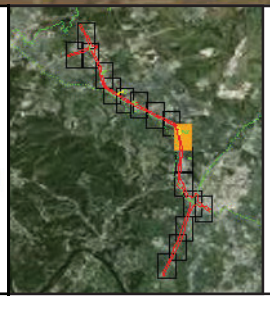

Service Layer Credits: UTBEG Geologic Map of the Austin Texas Area Source: Esri, DigitalGlobe, GeoEye, Earthstar Geographics, CNES/Airbus DS, USDA, USGS, AEX, Getmapping, Aerogrid, IGN, IGP, and the GIS User Community

183 NORTH MOBILITY PROJECT
Site Geologic Map
Page 10 of 17

N

0 100 200 300 400
Feet



Existing ROW
Proposed ROW
Existing Easement
Sewer Lines

Garner and Young (1976)
Ked - Edwards Limestone
Edwards Aquifer Recharge Zone (TCEQ Regulatory)

Service Layer Credits: UTBEG Geologic Map of the Austin Texas Area Source: Esri, DigitalGlobe, GeoEye, Earthstar Geographics, CNES/Airbus DS, USDA, USGS, AEX, Getmapping, Aerogrid, IGN, IGP, swisstopo, and the GIS User Community



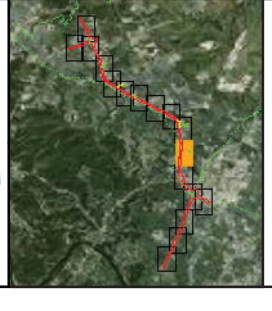

183 NORTH MOBILITY PROJECT
Site Geologic Map
Page 11 of 17

N

0 100 200 300 400
Feet



Existing ROW
Proposed ROW
Existing Easement
Drainage
Sewer Lines

Garner and Young (1976)
Ked - Edwards Limestone
Qtt - Tributary Terrace
Edwards Aquifer Recharge Zone (TCEQ Regulated)

STATE OF TEXAS
Philip C. Pearce
Geology
691
LICENSED
PROFESSIONAL GEOSCIENTIST
9-4-15

Service Layer Credits: UTBEG Geologic Map of the Austin Texas Area Source: Esri, DigitalGlobe, GeoEye, Earthstar Geographics, CNES/Airbus DS, USDA, USGS, AEX, Getmapping, Aerogrid, IGN, IGP, swisstopo, and the GIS User Community

183 NORTH MOBILITY PROJECT
Site Geologic Map
Page 12 of 17

N

0 100 200 300 400
Feet

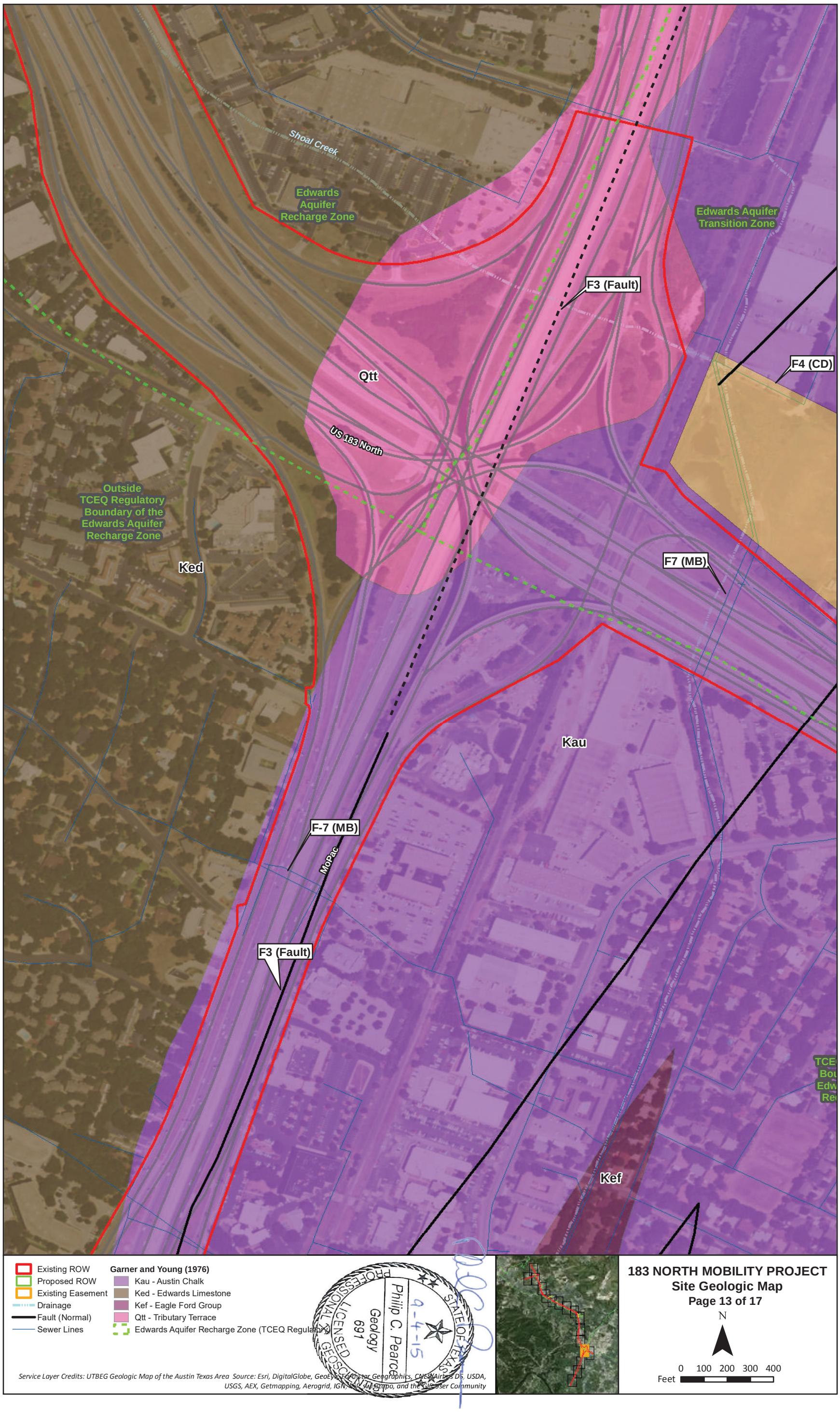
Shoal Creek
Edwards Aquifer Recharge Zone
Edwards Aquifer Transition Zone
F3 (Fault)
F4 (CD)
Qtt
US 183 North
Outside TCEQ Regulatory Boundary of the Edwards Aquifer Recharge Zone
Ked
F7 (MB)
Kau
F-7 (MB)
MoPac
F3 (Fault)
Kef
Existing ROW
Proposed ROW
Existing Easement
Drainage
Fault (Normal)
Sewer Lines
Garner and Young (1976)
Kau - Austin Chalk
Ked - Edwards Limestone
Kef - Eagle Ford Group
Qtt - Tributary Terrace
Edwards Aquifer Recharge Zone (TCEQ Regulatory)
PROFESSIONAL LICENSED GEOSCIENTIST
Philip C. Pearce
Geology
691
STATE OF TEXAS
9-4-15
Service Layer Credits: UTBEG Geologic Map of the Austin Texas Area Source: Esri, DigitalGlobe, GeoEye, Earthstar Geographics, CNES/Airbus DS, USDA, USGS, AEX, Getmapping, Aerogrid, IGN, IGP, swisstopo, and the GIS User Community
183 NORTH MOBILITY PROJECT
Site Geologic Map
Page 13 of 17
N
0 100 200 300 400
Feet

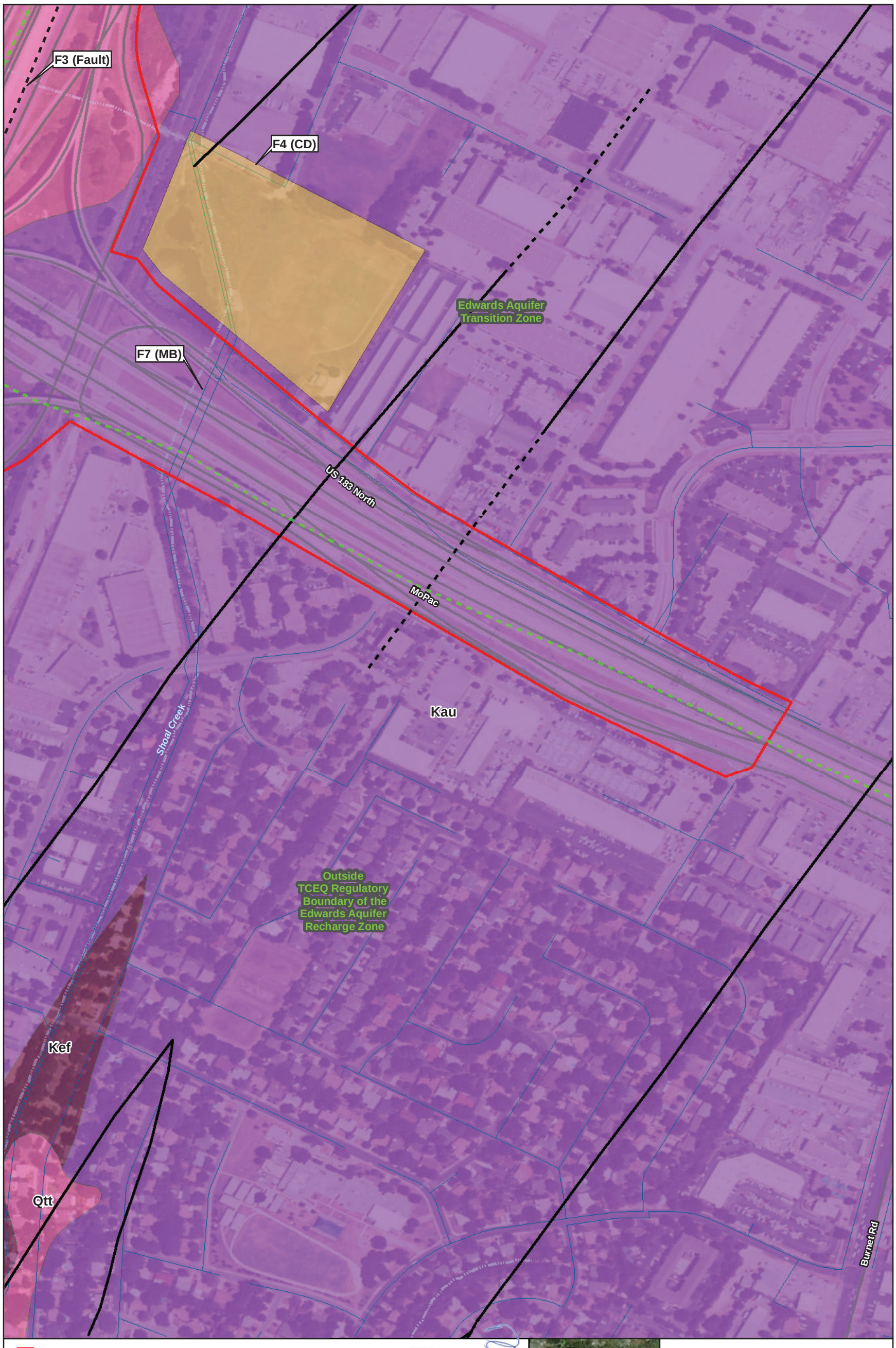
F3 (Fault)
F4 (CD)
F7 (MB)
Edwards Aquifer
Transition Zone
US 183 North
MoPac
Shoal Creek
Kau
Outside
TCEQ Regulatory
Boundary of the
Edwards Aquifer
Recharge Zone
Kef
Qtt
Burnet Rd
Existing ROW
Proposed ROW
Existing Easement
Drainage
Fault (Normal)
Fault (Approximate)
Sewer Lines
Garner and Young (1976)
Kau - Austin Chalk
Kef - Eagle Ford Group
Qtt - Tributary Terrace
Edwards Aquifer Recharge Zone (TCEQ Regulatory)
Service Layer Credits: UTBEG Geologic Map of the Austin Texas Area Source: Esri, DigitalGlobe, GeoEye, Earthstar Geographics, CNES/Airbus DS, USDA, USGS, AEX, Getmapping, Aerogrid, IGN, IGP, swisstopo, and the GIS User Community
PROFESSIONAL LICENSED GEOSCIENTIST
Philip C. Pearce
Geology
691
STATE OF TEXAS
9-4-15
183 NORTH MOBILITY PROJECT
Site Geologic Map
Page 14 of 17
N
0 100 200 300 400
Feet

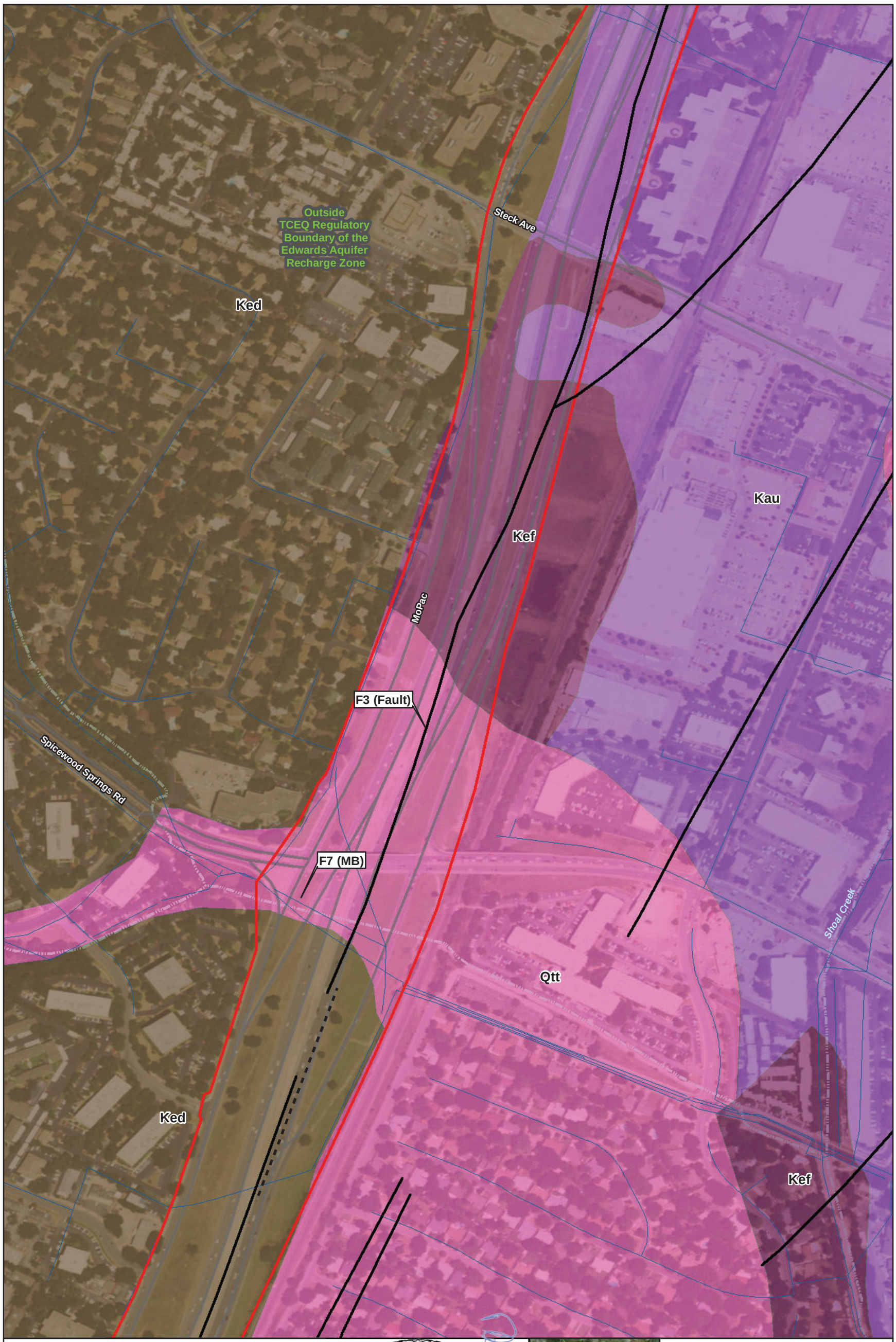

Existing ROW
Proposed ROW
Existing Easement
Drainage
Fault (Normal)
Sewer Lines

Garner and Young (1976)
Kau - Austin Chalk
Ked - Edwards Limestone
Kef - Eagle Ford Group
Qtt - Tributary Terrace
Edwards Aquifer Recharge Zone (TCEQ Regulatory)

Service Layer Credits: UTBEG Geologic Map of the Austin Texas Area Source: Esri, DigitalGlobe, GeoEye, Earthstar Geographics, CNES/Airbus DS, USDA, USGS, AEX, Getmapping, Aerogrid, IGN, IGP, swisstopo, and the GIS User Community

STATE OF TEXAS
Philip C. Pearce
Geology
691
LICENSED PROFESSIONAL GEOSCIENTIST
9-4-15

183 NORTH MOBILITY PROJECT
Site Geologic Map
Page 15 of 17

N

0 100 200 300 400
Feet

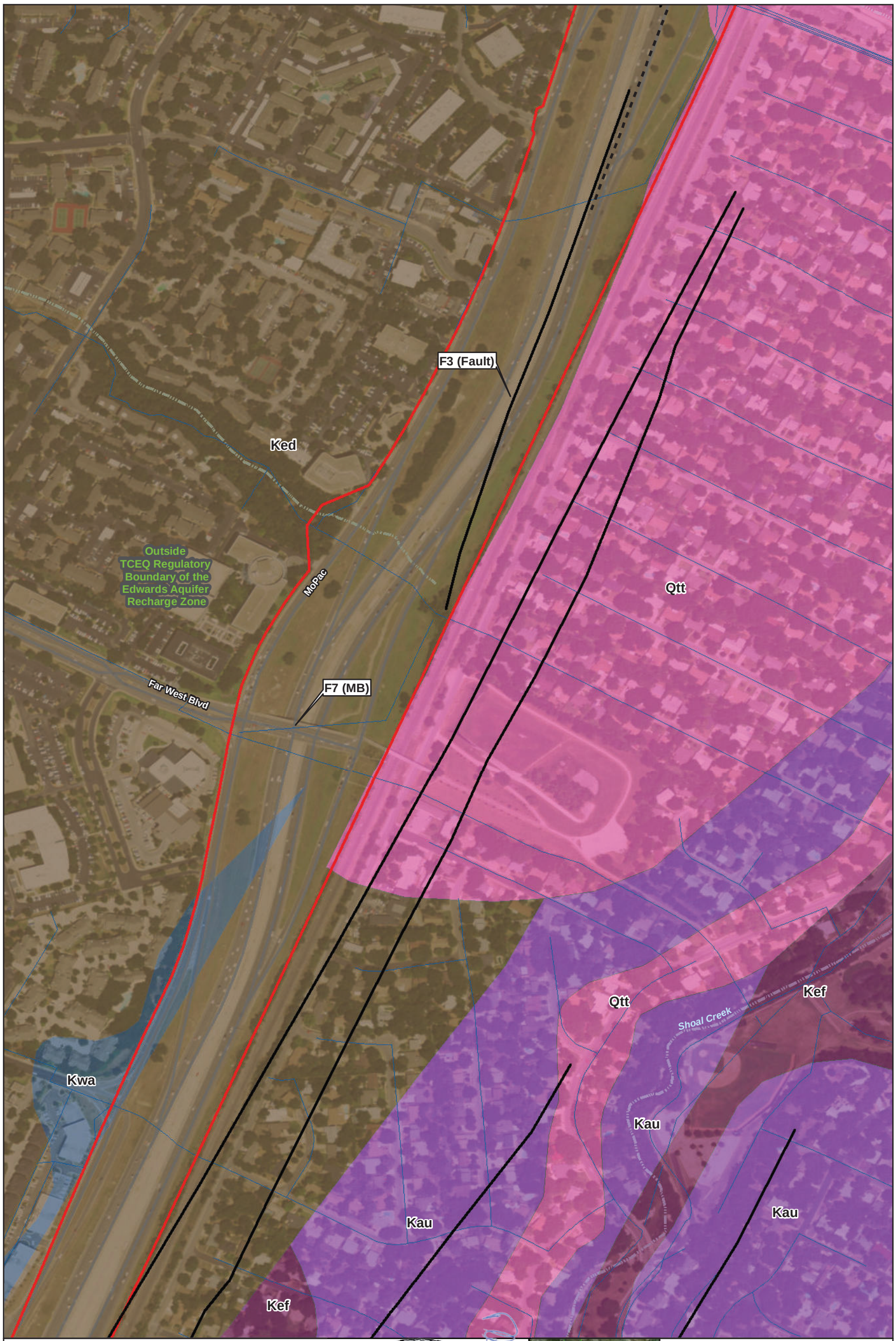
F3 (Fault)
Ked
Outside TCEQ Regulatory Boundary of the Edwards Aquifer Recharge Zone
MoPac
Qtt
F7 (MB)
Far West Blvd
Qtt
Kef
Shoal Creek
Kwa
Kau
Kau
Kau
Kef
Existing ROW
Proposed ROW
Existing Easement
Drainage
Fault (Normal)
Sewer Lines
Garner and Young (1976)
Kau - Austin Chalk
Ked - Edwards Limestone
Kef - Eagle Ford Group
Kwa - Walnut Formation, undivided
Qtt - Tributary Terrace
Edwards Aquifer Recharge Zone (TCEQ Regulatory)
PROFESSIONAL LICENSED GEOSCIENTIST
Philip C. Pearce
Geology
691
9-4-15
STATE OF TEXAS
Service Layer Credits: UTBEG Geologic Map of the Austin Texas Area Source: Esri, DigitalGlobe, GeoEye, Earthstar Geographics, CNES/Airbus DS, USDA, USGS, AEX, Getmapping, Aerogrid, IGN, IGP, swisstopo, and the GIS User Community
183 NORTH MOBILITY PROJECT
Site Geologic Map
Page 16 of 17
N
0 100 200 300 400
Feet

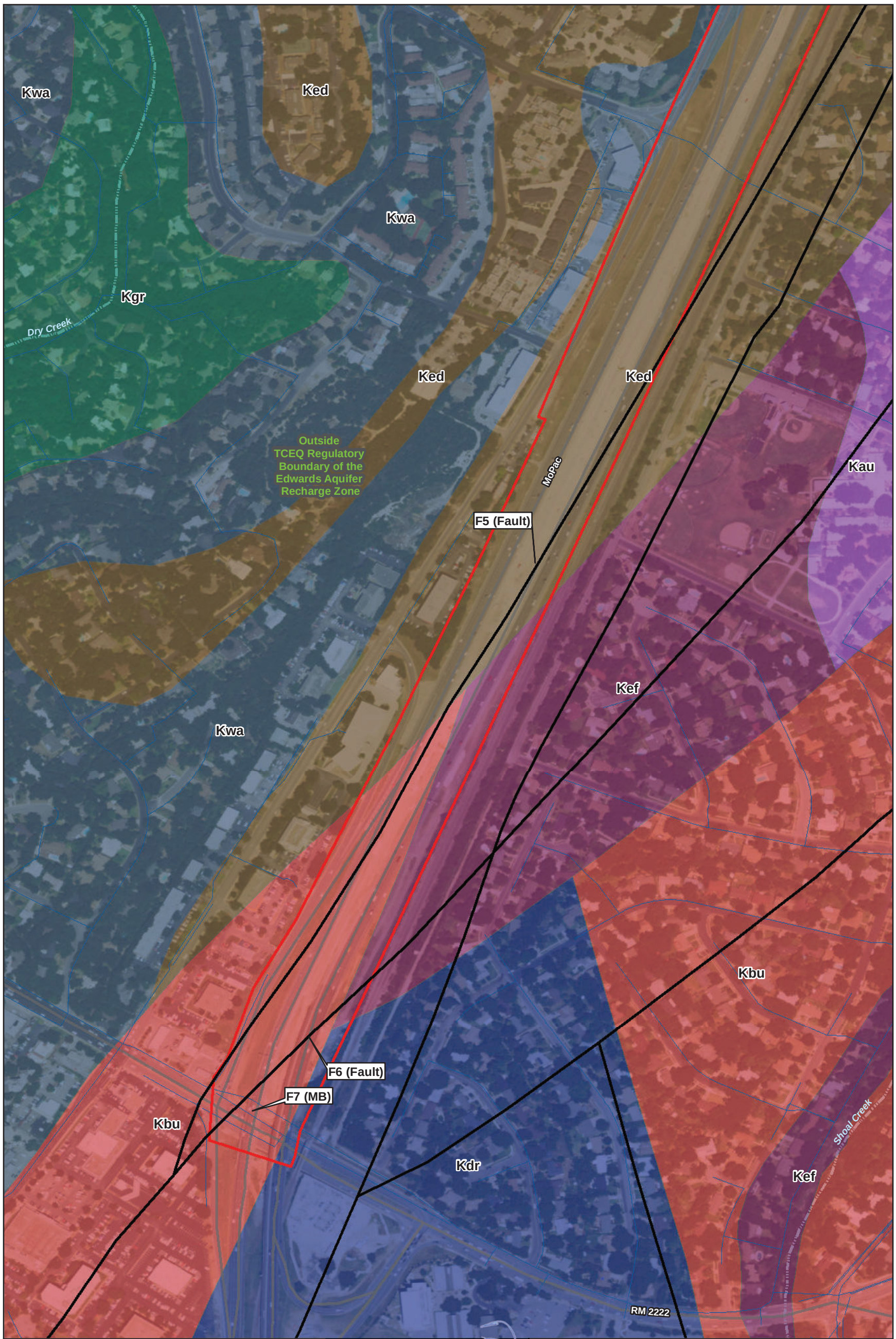
Kwa
Ked
Kwa
Kgr
Dry Creek
Ked
Ked
Outside
TCEQ Regulatory
Boundary of the
Edwards Aquifer
Recharge Zone
MoPac
F5 (Fault)
Kau
Kef
Kwa
Kbu
F6 (Fault)
F7 (MB)
Kbu
Kdr
Kef
Shoal Creek
RM 2222
Existing ROW
Proposed ROW
Existing Easement
Drainage
Fault (Normal)
Sewer Lines
Garner and Young (1976)
Kau - Austin Chalk
Kbu - Buda Limestone
Kdr - Del Rio Clay
Ked - Edwards Limestone
Kef - Eagle Ford Group
Kgr - Glen Rose Formation
Kwa - Walnut Formation, undivided
Edwards Aquifer Recharge Zone (TCEQ Regulation)
Service Layer Credits: UTBEG Geologic Map of the Austin Texas Area Source: Esri, DigitalGlobe, GeoEye, Earthstar Geographics, CNES/Airbus DS, USDA, USGS, AEX, Getmapping, Aerogrid, IGN, IGP, UPR-EGP, and the GIS User Community
PROFESSIONAL LICENSED GEOSCIENTIST
Philip C. Pearce
Geology
691
9-4-15
STATE OF TEXAS
183 NORTH MOBILITY PROJECT
Site Geologic Map
Page 17 of 17
N
0 100 200 300 400
Feet

TEMPORARY STORMWATER SECTION (TCEQ-0602)

Temporary Stormwater Section

Texas Commission on Environmental Quality

for Regulated Activities on the Edwards Aquifer Recharge Zone and Relating to 30 TAC §213.5(b)(4)(A), (B), (D)(I) and (G); Effective June 1, 1999

To ensure that the application is administratively complete, confirm that all fields in the form are complete, verify that all requested information is provided, consistently reference the same site and contact person in all forms in the application, and ensure forms are signed by the appropriate party.

Note: Including all the information requested in the form and attachments contributes to more streamlined technical reviews.

Signature

To the best of my knowledge, the responses to this form accurately reflect all information requested concerning the proposed regulated activities and methods to protect the Edwards Aquifer. This **Temporary Stormwater Section** is hereby submitted for TCEQ review and executive director approval. The application was prepared by:

Print Name of Customer/Agent: Great Hills Constructors / Mark Frye, PE

Date: January 22, 2024

Signature of Customer/Agent:

Mark Frye , PE

Regulated Entity Name: 183 North Mobility Project

Project Information

Potential Sources of Contamination

Examples: Fuel storage and use, chemical storage and use, use of asphaltic products, construction vehicles tracking onto public roads, and existing solid waste.

1. Fuels for construction equipment and hazardous substances which will be used during construction:

   ☐ The following fuels and/or hazardous substances will be stored on the site: _____

   These fuels and/or hazardous substances will be stored in:

   ☐ Aboveground storage tanks with a cumulative storage capacity of less than 250 gallons will be stored on the site for less than one (1) year.

☐ Aboveground storage tanks with a cumulative storage capacity between 250 gallons and 499 gallons will be stored on the site for less than one (1) year.

☐ Aboveground storage tanks with a cumulative storage capacity of 500 gallons or more will be stored on the site. An Aboveground Storage Tank Facility Plan application must be submitted to the appropriate regional office of the TCEQ prior to moving the tanks onto the project.

☒ Fuels and hazardous substances will not be stored on the site.

2. ☒ **Attachment A - Spill Response Actions**. A site specific description of the measures to be taken to contain any spill of hydrocarbons or hazardous substances is attached.

3. ☐ Temporary aboveground storage tank systems of 250 gallons or more cumulative storage capacity must be located a minimum horizontal distance of 150 feet from any domestic, industrial, irrigation, or public water supply well, or other sensitive feature.

4. ☒ **Attachment B - Potential Sources of Contamination**. A description of any activities or processes which may be a potential source of contamination affecting surface water quality is attached.

Sequence of Construction

5. ☒ **Attachment C - Sequence of Major Activities**. A description of the sequence of major activities which will disturb soils for major portions of the site (grubbing, excavation, grading, utilities, and infrastructure installation) is attached.

☒ For each activity described, an estimate (in acres) of the total area of the site to be disturbed by each activity is given.

☒ For each activity described, include a description of appropriate temporary control measures and the general timing (or sequence) during the construction process that the measures will be implemented.

6. ☒ Name the receiving water(s) at or near the site which will be disturbed or which will receive discharges from disturbed areas of the project: Lake Creek, Walnut Creek, Bull Creek, Shoal Creek

Temporary Best Management Practices (TBMPs)

Erosion control examples: tree protection, interceptor swales, level spreaders, outlet stabilization, blankets or matting, mulch, and sod. Sediment control examples: stabilized construction exit, silt fence, filter dikes, rock berms, buffer strips, sediment traps, and sediment basins. Please refer to the Technical Guidance Manual for guidelines and specifications. All structural BMPs must be shown on the site plan.

7. ☒ **Attachment D – Temporary Best Management Practices and Measures**. TBMPs and measures will prevent pollution of surface water, groundwater, and stormwater. The construction-phase BMPs for erosion and sediment controls have been designed to retain sediment on site to the extent practicable. The following information is attached:

☒ A description of how BMPs and measures will prevent pollution of surface water, groundwater or stormwater that originates upgradient from the site and flows across the site.

☒ A description of how BMPs and measures will prevent pollution of surface water or groundwater that originates on-site or flows off site, including pollution caused by contaminated stormwater runoff from the site.

☒ A description of how BMPs and measures will prevent pollutants from entering surface streams, sensitive features, or the aquifer.

☒ A description of how, to the maximum extent practicable, BMPs and measures will maintain flow to naturally-occurring sensitive features identified in either the geologic assessment, TCEQ inspections, or during excavation, blasting, or construction.

8. ☐ The temporary sealing of a naturally-occurring sensitive feature which accepts recharge to the Edwards Aquifer as a temporary pollution abatement measure during active construction should be avoided.

☐ **Attachment E - Request to Temporarily Seal a Feature**. A request to temporarily seal a feature is attached. The request includes justification as to why no reasonable and practicable alternative exists for each feature.

☒ There will be no temporary sealing of naturally-occurring sensitive features on the site.

9. ☒ **Attachment F - Structural Practices**. A description of the structural practices that will be used to divert flows away from exposed soils, to store flows, or to otherwise limit runoff discharge of pollutants from exposed areas of the site is attached. Placement of structural practices in floodplains has been avoided.

10. ☐ **Attachment G - Drainage Area Map**. A drainage area map supporting the following requirements is attached:

☐ For areas that will have more than 10 acres within a common drainage area disturbed at one time, a sediment basin will be provided.

☐ For areas that will have more than 10 acres within a common drainage area disturbed at one time, a smaller sediment basin and/or sediment trap(s) will be used.

☐ For areas that will have more than 10 acres within a common drainage area disturbed at one time, a sediment basin or other equivalent controls are not attainable, but other TBMPs and measures will be used in combination to protect down slope and side slope boundaries of the construction area.

☒ There are no areas greater than 10 acres within a common drainage area that will be disturbed at one time. A smaller sediment basin and/or sediment trap(s) will be used in combination with other erosion and sediment controls within each disturbed drainage area.

☐ There are no areas greater than 10 acres within a common drainage area that will be disturbed at one time. Erosion and sediment controls other than sediment basins or sediment traps within each disturbed drainage area will be used.

11. ☐ **Attachment H - Temporary Sediment Pond(s) Plans and Calculations**. Temporary sediment pond or basin construction plans and design calculations for a proposed temporary BMP or measure have been prepared by or under the direct supervision of a Texas Licensed Professional Engineer. All construction plans and design information must be signed, sealed, and dated by the Texas Licensed Professional Engineer. Construction plans for the proposed temporary BMPs and measures are attached.

☒ N/A

12. ☒ **Attachment I - Inspection and Maintenance for BMPs.** A plan for the inspection of each temporary BMP(s) and measure(s) and for their timely maintenance, repairs, and, if necessary, retrofit is attached. A description of the documentation procedures, recordkeeping practices, and inspection frequency are included in the plan and are specific to the site and/or BMP.

13. ☒ All control measures must be properly selected, installed, and maintained in accordance with the manufacturer's specifications and good engineering practices. If periodic inspections by the applicant or the executive director, or other information indicate a control has been used inappropriately, or incorrectly, the applicant must replace or modify the control for site situations.

14. ☒ If sediment escapes the construction site, off-site accumulations of sediment must be removed at a frequency sufficient to minimize offsite impacts to water quality (e.g., fugitive sediment in street being washed into surface streams or sensitive features by the next rain).

15. ☒ Sediment must be removed from sediment traps or sedimentation ponds not later than when design capacity has been reduced by 50%. A permanent stake will be provided that can indicate when the sediment occupies 50% of the basin volume.

16. ☒ Litter, construction debris, and construction chemicals exposed to stormwater shall be prevented from becoming a pollutant source for stormwater discharges (e.g., screening outfalls, picked up daily).

Soil Stabilization Practices

Examples: establishment of temporary vegetation, establishment of permanent vegetation, mulching, geotextiles, sod stabilization, vegetative buffer strips, protection of trees, or preservation of mature vegetation.

17. ☒ **Attachment J - Schedule of Interim and Permanent Soil Stabilization Practices**. A schedule of the interim and permanent soil stabilization practices for the site is attached.

18. ☒ Records must be kept at the site of the dates when major grading activities occur, the dates when construction activities temporarily or permanently cease on a portion of the site, and the dates when stabilization measures are initiated.

19. ☒ Stabilization practices must be initiated as soon as practicable where construction activities have temporarily or permanently ceased.

Administrative Information

20. ☒ All structural controls will be inspected and maintained according to the submitted and approved operation and maintenance plan for the project.

21. ☒ If any geologic or manmade features, such as caves, faults, sinkholes, etc., are discovered, all regulated activities near the feature will be immediately suspended. The appropriate TCEQ Regional Office shall be immediately notified. Regulated activities must cease and not continue until the TCEQ has reviewed and approved the methods proposed to protect the aquifer from any adverse impacts.

22. ☒ Silt fences, diversion berms, and other temporary erosion and sediment controls will be constructed and maintained as appropriate to prevent pollutants from entering sensitive features discovered during construction.

ATTACHMENT A – SPILL RESPONSE ACTION

1.1 OVERVIEW

This section describes the procedures that will be implemented by GHC to respond to spills that may occur during the Project. Personnel involved in the handling of hazardous materials will be trained and certified to respond to spills or releases of hazardous materials under the HAZWOPER training program (29 CFR 1910.120(e)(3)(i)). These individuals will be able to conduct minor response actions and will assess whether it is necessary to contact the emergency response contractor under contract to GHC. If a release is not an emergency, GHC may remediate the release without requesting assistance from a third-party emergency response contractor.

Releases of the following commonly used materials on the Project are not considered to constitute an emergency, and GHC personnel may respond to a release of these materials:

- Diesel Fuel
- Hydraulic Fluid
- Transmission Fluid
- Motor Oil (new and used)
- Tack Coat
- Emulsion (petroleum or water-based)

If other substances are released, the Environmental Compliance Inspector (ECI) will immediately contact the Hazardous Materials Manager (HMM), who will determine if the materials releases are hazardous substances that require response by an emergency response contractor.

1.2 RESPONSES TO NON-EMERGENCY RELEASE

- GHC personnel will immediately notify Environmental Team (ET) personnel and the Area Superintendent or his designee of the release.
- GHC ET personnel will take steps to prevent the material from migrating from the immediate area of the release using soil berms, spill booms, or other methods.
- ET personnel will determine if the release constitutes an emergency
- The Area Superintendent or designee, working with ET personnel, will direct GHC personnel to excavate the affected soil and stockpile it in an area where it will not be disturbed by GHC activities.
- Affected soil will be transported to an area on the right-of-way, preferably within an existing soil stockpile area, and stockpiled. The affected soil will be placed on plastic sheeting and covered

with plastic sheeting. The stockpile will be marked using traffic control fencing. Standard best management practices (e.g., silt fence) will be placed around the stockpile.

- The Storm Water Pollution Prevention Plan (SW3P) sheets will be updated to include the stockpile.

1.3 EMERGENCY RESPONSES TO RELEASES

1.3.1 INITIAL PROCEDURES

In the case of spills that have immediate potential to contaminate surface water or groundwater, field personnel will:

- Immediately contact a member of the ET.
- Take reasonable measures to prevent the material from entering the surface water (e.g., placement of a spill boom or soil berm) if there is no potential safety or health hazard as defined in 29 CFR 1910.120(a)(3) – definition of Emergency Response.
- The Safety Representative will assess the scene to determine if a threat to human health is present and will act accordingly.
- The ECI will then notify Mobility Authority, the ECM, and the HMM by telephone of the incident. The ECI and/or the HMM will contact the emergency response contractor.

After the scene has been secured by the Safety Representative to prevent unauthorized personnel from contacting the release and steps have been taken by the ECI and/or HMM to abate the source of the release, the ECI and/or HMM will make the following determinations:

- Further actions that should be taken to reduce the impacts of the emergency.
- The type of environmental emergency that has occurred and if the emergency is required to be reported to a Governmental Entity.
- In accordance with the DBA Exhibit C – Technical Provisions, Section 9.6.3, the ET has the authority to stop work if the work should represent an imminent danger to human health or the environment. Work stoppage should be limited to the immediate vicinity or area affected by the event that represents the danger.

The ET will transmit this information to the Mobility Authority and proceed to the site of the work stoppage.

1.3.2 REPORTING

1.3.2.1 *Reporting Procedures*

As stipulated in the DBA, Exhibit C – Technical Provisions, Section 22.7.2 – Emergency Response, "If an emergency occurs that affects the safety or protection of persons, the Project, or the property at the site or adjacent thereto, DB Contractor shall immediately act to prevent and mitigate threatened damage, injury or loss." An environmental emergency such as a release from an AST is such a situation to which GHC will immediately respond.

Reporting Contact numbers for the ET will be posted in contractor field office.

1.3.2.2 *Reporting Requirements to Governmental Entities*

In the event of a release, information to be reported to federal and state governmental entities is presented in the section below.

Federal Government

The federal and state governments have established reportable quantities (RQs) for various types of materials that may be released. If a spill of a hazardous substance in a quantity equal to or greater than the RQ occurs, the spill must be reported to the National Response Center (NRC) immediately. The toll-free telephone number for reporting to the NRC is given below:

NRC Toll-Free Hazardous Substance Reporting Telephone No. **800 424-8802**

State Government

State release reporting requirements and RQs are codified in 30 TAC Chapter 327. State RQs are listed in the following table.

State of Texas Reportable Quantities (RQs) - 30 TAC 327.4	
Material	**RQ**
Hazardous Substances onto Land	Final RQ in Table 302.4 of 40 CFR 302.4
Hazardous Substances into Waters of the State	Final RQ in Table 302.4 of 40 CFR 302.4 Or 100 pounds if the Final RQ in Table 302.4 exceeds 100 pounds
Petroleum Product and Used Oil onto Land	25 gallons
Petroleum Product and Used Oil into Waters of the State	Sufficient to create a sheen
Other Substances	100 pounds

As a member of the State Emergency Response Commission (SERC), the TCEQ is responsible for taking accidental release reports. 30 TAC 327.3 requires that releases equal to or exceeding the RQ be reported to one of the following:

State Emergency Spill Response Center / TCEQ 24-Hour Hot Line

- 800-832-8224

TCEQ Non-Spill Emergency Hot Line

- 888-777-3186

The Regional TCEQ Office in which the release occurred

- 512-339-2929

Reporting to any of the above fulfills the federal requirement to report to the State SERC.

The SERC will share the reported information to the Local Emergency Planning Committee (LEPC). If warranted, the LEPC will activate the local emergency response plan to respond to the release. If not, the release information will be made available to the public upon request.

ATTACHMENT B – POTENTIAL SOURCES OF CONTAMINATION

1.1 STORMWATER CONTAMINATES

The primary storm water contaminant expected to be generated during 183N Phase 2 is entrained solids (soil particles) which will affect the turbidity of the runoff. Disturbed soils will result from:

- removal of existing pavement adjacent to the outside widening
- removal of existing drainage inlets and storm sewer
- removal of existing traffic barrier
- excavation for retaining wall
- installation of proposed storm sewer and inlet structures for the outside widening
- drilled shaft foundations for sign, DMS, and toll gantry structures
- constructing new batch detention ponds
- reconfiguring existing water quality ponds to function as batch detention ponds
- spills or leaks of project materials onto soil or into water
- elevated pH in runoff from areas where concrete is being poured for drilled shaft foundations, retaining walls, bridge deck, and concrete pavement.

1.2 INCREASED SEDIMENT LOADING

Increased sediment loading in the storm water can be attributed to:

- direct impingement of rain onto disturbed soil areas, sand, gravel, and rock areas where rains dislodge or entrain particles.
- erosion of disturbed soil areas.
- the transfer of soils and particulate matter via equipment or vehicle tires onto undisturbed areas

ATTACHMENT C – SEQUENCE OF MAJOR ACTIVITIES

1.1 GENERAL

The Project will be constructed in two major phases of work. Phase 1 construction involves widening within the existing median to construct express lanes, utility adjustments, sidewalk, and driveways. Phase 2 construction involves outside widening to accommodate fourth continuous general-purpose lane along US 183, construction of new permanent BMPs, and reconfiguration of existing BMPs.

1.2 183N PHASE 2 SEQUENCE OF MAJOR ACTIVITIES

An estimate of the total area of the site to be disturbed by each 183N Phase 2 activity is found in Table 10.

183N Phase 2 Construction Activity	183N Phase 2 Disturbed Area (acres)
Outside widening grading, removals, storm sewer, drainage structures, and retaining wall	24.7
Bridge 6 (Spicewood Springs/McNeil Rd overpass)	0.36
Bridge 7 (Oak Knoll Dr overpass)	0.16
Bridge 8 (Duval Rd overpass)	0.30
Bridge 9 (Balcones Woods Dr overpass)	0.23
Bridge 10 (Braker Ln overpass)	0.23
Bridge 11 (Great Hills Trail overpass)	0.17
Bridge 12 (new US 183 managed lanes direct connector)	1.1
Reconfigured and new BMPs	13.6
Temporary Pavement	0.3

Table 10 183N Phase 2 Disturbed Areas

The sequence of major activities that will occur in this 183N Phase 2 include:

- Implement temporary BMPs at existing curb inlets within U-turn, at cross streets, and adjacent US 183 service roads
- Implement temporary BMPs for drop inlets within existing outer separation of US 183
- Install rock stabilized construction entrances to US 183 outer separation
- Install temporary BMPs for temporary pavement sites

- Construct bridge deck and pavement for median widening
- Grading and paving for temporary pavement
- Remove existing pavement adjacent to outside widening
- Excavation for retaining walls and proposed storm sewer and inlets
- Placement of select backfill material for retaining walls
- Remove temporary median access ramps and place embankment material
- Construct drilled shaft foundations for abutments, at bridges 2, 7, and 11.
- Construct bridge deck and pavement for outside widening
- Construct drilled shaft foundation for sign structures, ITS, DMS, and toll gantries
- Construction of sidewalk

Sequencing of reconfigured water quality vault 2D1 will be as follows:

- Where required, construct proposed tie-back wall between existing US 183 and existing water quality vault to permanently support US 183
- Excavate to expose existing vault top
- Remove existing vault top
- Construct new walls along vault perimeter
- Construct transverse wall and install proposed riser pipe, trash rack and actuator valve
- Actuator valve to remain closed until pond reconfiguration is complete.
- Prior to removing existing sediment or standing water, test for hazardous materials and dispose of in accordance with State and Federal regulations.
- Remove existing filtration material and disconnect existing outfall pipe
- GHC personnel will be available to dewater pond after any rainfall event.
- After rainfall event, pond volume will be held for 12-hours.
- GHC will pump pond volume using sedimentation bag into outfall side of existing splitter box.
- After pond reconfiguration is complete, controller will automatically open and close actuator valve and pond will drain via proposed outfall pipe.

Sequencing of reconfigured offsite surface water quality ponds will be as follows:

- Construct proposed riser pipe, trash rack, actuator valve, controller, and outfall pipe.
- Actuator valve to remain closed until pond reconfiguration is complete
- Prior to removing existing sediment or standing water, test for hazardous materials and dispose of in accordance with State and Federal regulations.
- Remove existing filtration material and disconnect existing outfall pipe
- Perform grading as necessary to reconfigure pond to batch detention type
- GHC personnel will be available to dewater pond after any rainfall event.
- After rainfall event, pond volume will be held for 12-hours.
- GHC will pump pond volume using sedimentation bag into outfall side of existing splitter box.

- After pond reconfiguration is complete, controller will automatically open and close actuator valve and pond will drain via proposed outfall pipe.

Sequencing of Contech Jellyfish Filter systems will be as follows:

- Construct storm drains system connecting pre-cast Jellyfish vaults to outfall structure
- Install pre-cast vaults containing Jellyfish® Filter system
- Construct storm drain system connecting splitter boxes to precast Jellyfish vault(s)
- Reroute existing drainage and construct junction boxes and splitter boxes as required.
- Abandon existing subsurface vaults 1A, 1B, 1C, 2A, 2B, 2C, and 2D2 by plugging existing inlet and outlet pipes and filling existing vault with sand or flowable backfill.

ATTACHMENT D – TEMPORARY BEST MANAGEMENT PRACTICES

1.1 GENERAL

The Project will implement temporary best management practice (TBMPs) recommended in TCEQ's Complying with Edward Aquifer Rules Technical Guidance on Best Management Practices (RG-348). A comprehensive list of temporary erosion and sediment control BMPs and non-structural BMPs that will be utilized on the Project are outlined in the following sections.

1.2 TEMPORARY EROSION CONTROL BMPS

- Temporary seeding of disturbed slopes
- Perimeter/Diversion Swale
- Dust Control

1.3 TEMPORARY SEDIMENT CONTROL BMPS

- Temporary Construction entrance/exit
- Silt fence
- Inlet Protection
- Storm inlet sediment trap
- Sediment Trap
- Rock filter dams
- Dewatering bags
- Spill prevention and control
- Concrete washout areas

1.4 NON-STRUCTURAL BMPS

- Housekeeping practices
- Tree protection
- Preservation of riparian areas

1.5 BMPS AND MEASURES FOR FLOW ORIGINATING UPGRADIENT FROM SITE

In most instances, upgradient stormwater originating from commercial development adjacent to the Project ROW is captured by inlets within the development property and conveyed in storm sewer to water quality ponds and their existing outfalls. There are instances where upgradient storm water enters the Project ROW from adjacent commercial development and is captured by existing drop inlets at the edge of ROW or sheet flows across the border area of frontage roads into existing curb inlets.

Measures to prevent pollution include inlet protection for existing frontage road curb inlets and drop inlets with gravel bag BMPs and/or erosion control logs. Additionally, seventeen existing water quality ponds within the Project ROW and off-site will remain in service for the duration of 183N Phase 2 activities.

1.6 BMPS AND MEASURES FOR FLOWS ORIGINATING ON-SITE

Stormwater originating on-site will be captured in existing curb inlets, drop inlets and grate inlets, and conveyed in storm drain systems to existing water quality ponds within the Project ROW and off site. TBMPs for existing frontage road curb inlets, drop inlets and grate inlets include gravel bag BMPs and/or erosion control logs. Sediment traps and rock filter dams will be utilized within the existing median to capture sediment at low point drop inlets and on grade. Silt fence will be deployed along Project ROW in instances where border area is to be disturbed and runoff leaves the site. Preservation of existing stabilized areas to the extent possible. Dewatering bags will be utilized as required for dewatering of drilled shaft foundations. Washout areas for concrete trucks will be implemented during placement of concrete for bridge substructure elements. Temporary construction exits will be implemented prior to grading for temporary pavement and installation of drilled shafts within the US 183 / Loop 1 interchange.

1.7 183N PHASE 2 MOD TEMPORARY BMPS

A plan layout of Temporary BMPs that will be implemented for the 183N Phase 2 Mod construction activities is found in the Storm Water Pollution Prevention Plan (SW3P) included in Attachment G Construction Plans of the EAPP Roadway Application.

ATTACHMENT E – NOT USED

ATTACHMENT F – STRUCTURAL PRACTICES

1.8 GENERAL

In addition to the seventeen existing water quality ponds that capture stormwater and will remain in service for the duration of 183N Phase 2 construction, GHC will deploy and maintain temporary BMPs prescribed in TCEQ RG-348 and as shown on the SW3P to minimize surface stream contamination. Reconfigured ponds will be constructed using a phased approach to allow uninterrupted treatment of stormwater up until each reconfigured pond is fully functional as a batch detention pond.

1.9 183N PHASE 2 MOD STRUCTURAL PRACTICES

All existing water quality ponds shall remain operational in their existing configuration for the duration of construction activities performed under this 183N Phase 2 Mod application. Existing water quality ponds are listed in Table 11 showing their existing configuration.

Inlet protection will be implemented for existing curb inlets capturing runoff from existing U-turns, cross streets, and frontage roads. Prior to grading activities for outside widening and temporary pavement, inlet protection will be implemented for existing drop inlets capturing runoff within the outer separation. Rock stabilized construction entrances will be implemented to prevent tracking of sediment on to existing roadways as construction equipment leaves the access point.

Water Quality BMP ID	Existing Configuration	Proposed Configuration
Line B and Line C Pond	Extended detention	No change
Pond E	Vertical gravel filter	No change
Pond F	Vertical gravel filter	No change
Pond G	Vertical gravel filter	No change
620 Median Pond	Surface Sedimentation-sand filtration	No change
Lake Creek 1A	Vault Sedimentation-sand filtration (pumped)	Jellyfish® Filter
Lake Creek 1B	Vault Sedimentation-sand filtration	Jellyfish® Filter
Lake Creek 1C	Vault Sedimentation-sand filtration	Jellyfish® Filter
Hymeadow Pond 2A	Vault Sedimentation-sand filtration	Jellyfish® Filter
Hymeadow Pond 2B	Vault Sedimentation-sand filtration	Jellyfish® Filter
Hymeadow Pond 2C	Vault Sedimentation-sand filtration	Jellyfish® Filter

Water Quality BMP ID	Existing Configuration	Proposed Configuration
Hymeadow Pond 2D1	Vault Sedimentation-sand filtration	Surface batch detention
Hymeadow Pond 2D2	Vault Sedimentation-sand filtration	Jellyfish® Filter
Pond Springs Pond	Surface Sedimentation-sand filtration	Surface batch detention
Woods Pond	Wet pond	Wet pond
Pond E	New pond	Surface batch detention
West Cow Path	Surface Sedimentation-sand filtration	Surface batch detention
Seton Pond	Surface Sedimentation-sand filtration	Surface batch detention
Pond 360	New Pond	Surface batch detention
Pond H	New Pond	Surface batch detention

Table 11 Existing and Proposed Permanent BMPs

ATTACHMENT G – DRAINAGE AREA MAP

1.1 GENERAL

Areas to be disturbed at one time during 183N Phase 2 Mod are not greater than 10 acres within a common drainage area. Where required, sediment traps will be in used in combination with other erosion and sediment controls within each disturbed drainage area. Drainage area maps are found in Attachment G Construction Plans.

ATTACHMENT H – TEMPORARY SEDIMENT POND(S) PLANS & CALCULATIONS

1.1 GENERAL

Temporary sediment ponds are not required for the 183N Phase 2 Mod application.

ATTACHMENT I – INSPECTION AND MAINTENANCE FOR BMPs

1.1 MONITORING AND DOCUMENTATION

Control measures shall be monitored daily if there are temporary BMPs in place and/or soil disturbing activities are evident to ensure compliance with the SWP3 and TPDES General Permit TXR150000. When work is not occurring, daily inspections are not required unless a rain event has occurred. Monitoring will consist of, but is not limited to, observing, inspecting, and documenting site locations with control measures and discharge points to provide maintenance and inspection of controls as described in the SWP3. Written records of daily monitoring will be kept. The daily monitoring report will document the control measure condition, the date of inspection, required corrective actions, responsible person for making the corrections, and the date corrective actions were completed.

1.2 INSPECTION AND MAINTENANCE OF TEMPORARY BMPS

GHC shall inspect and document the condition of the control measures every 7 calendar days and will prepare the Construction SWP3 Field Inspection and Maintenance Reports. Corrections will be made as soon as possible before the next anticipated rain event or within 7 calendar days after being able to enter the worksite for each control measure.

1.3 INSPECTION AND MAINTENANCE OF PERMANENT BMPS

GHC shall be responsible for maintaining detention and water quality ponds within the Project ROW for the term of the Design-Build Agreement. Existing water quality ponds will be maintained according to the following TCEQ recommended guidelines.

- **Inspections.** BMP facilities must be inspected at least twice a year (once during or immediately following wet weather) to evaluate facility operation. During each inspection, erosion areas inside and downstream of the BMP must be identified and repaired or revegetated immediately. With each inspection, any damage to the structural elements of the system (pipes, concrete drainage structures, retaining walls, etc.) must be identified and repaired immediately.

- **Sediment Removal.** Remove sediment from the inlet structure and sedimentation chamber when sediment buildup reaches a depth of 6 inches or when the proper functioning of inlet and outlet structures is impaired. Sediment should be cleared from the inlet structure at least every year and from the sedimentation basin at least every 5 years.

- **Media Replacement.** Maintenance of the filter media is necessary when the draw-down time exceeds 48 hours. When this occurs, the upper layer of sand should be removed and replaced with new material meeting the original specifications. Any discolored sand should also be

removed and replaced. In filters that have been regularly maintained, this should be limited to the top 2 to 3 inches.

- **Debris and Litter Removal.** Debris and litter will accumulate near the sedimentation basin outlet device and should be removed during regular mowing operations and inspections. Particular attention should be paid to floating debris that can eventually clog the control device or riser.

- **Filter Underdrain.** Clean underdrain piping network to remove any sediment buildup as needed to maintain design drawdown time.

- **Debris and Litter Removal.** Debris and litter will accumulate near the sedimentation basin outlet device and should be removed during regular mowing operations and inspections. Particular attention should be paid to floating debris that can eventually clog the control device or riser.

ATTACHMENT J – SCHEDULE OF INTERIM AND PERMANENT SOIL STABILIZATION PRACTICES

1.1 GENERAL

During construction, GHC will utilize temporary seeding, protection of existing riparian areas, and preservation of existing vegetation for interim soil stabilization. Post-construction, permanent seeding, sodding, and slope paving will be utilized as permanent soil stabilization.

1.2 INTERIM SOIL STABILIZATION PRACTICES

During 183N Phase 2 construction activities, interim soil stabilization practices include:

- Minimizing disturbance to areas that are not impacted by construction
- Temporary seeding of disturbed area where construction activities permanently or temporarily cease for more than 14 days
- Dust control

1.3 PERMANENT SOIL STABILIZATION PRACTICES

Permanent stabilization practices will be implemented primarily during Phase 2 as permanent work is completed and as phasing allows. Permanent soil stabilization practices include:

- Permanent seeding/sodding of disturbed areas
- Permanent erosion control in ditches
- Slope paving of areas that are too narrow for maintenance
- Preservation of riparian areas
- Outlet stabilization

AGENT AUTHORIZATION FORM (TCEQ-0599)

Agent Authorization Form
For Required Signature
Edwards Aquifer Protection Program
Relating to 30 TAC Chapter 213
Effective June 1, 1999

I Michael Sexton, PE,
Print Name

Director of Engineering,
Title - Owner/President/Other

of Central Texas Regional Mobility Authority (CTRMA),
Corporation/Partnership/Entity Name

have authorized Mark Frye, PE
Print Name of Agent/Engineer

of Great Hills Constructors
Print Name of Firm

to represent and act on the behalf of the above named Corporation, Partnership, or Entity for the purpose of preparing and submitting this plan application to the Texas Commission on Environmental Quality (TCEQ) for the review and approval consideration of regulated activities.

I also understand that:

1. The applicant is responsible for compliance with 30 Texas Administrative Code Chapter 213 and any condition of the TCEQ's approval letter. The TCEQ is authorized to assess administrative penalties of up to $10,000 per day per violation.

2. For those submitting an application who are not the property owner, but who have the right to control and possess the property, additional authorization is required from the owner.

3. Application fees are due and payable at the time the application is submitted. The application fee must be sent to the TCEQ cashier or to the appropriate regional office. The application will not be considered until the correct fee is received by the commission.

4. A notarized copy of the Agent Authorization Form must be provided for the person preparing the application, and this form must accompany the completed application.

5. No person shall commence any regulated activity on the Edwards Aquifer Recharge Zone, Contributing Zone or Transition Zone until the appropriate application for the activity has been filed with and approved by the Executive Director.

SIGNATURE PAGE:

Applicant's Signature

10/27/2021
Date

THE STATE OF Texas §

County of Travis §

BEFORE ME, the undersigned authority, on this day personally appeared Michael Sexton known to me to be the person whose name is subscribed to the foregoing instrument, and acknowledged to me that (s)he executed same for the purpose and consideration therein expressed.

GIVEN under my hand and seal of office on this 27th day of October, 2021.

NOTARY PUBLIC

JOSEFINA IBARRA
Notary Public, State of Texas
Comm. Expires 11-04-2021
Notary ID 129614504

Josefina Ibarra
Typed or Printed Name of Notary

MY COMMISSION EXPIRES: 11-04-2021

Agent Authorization Form
For Required Signature
Edwards Aquifer Protection Program
Relating to 30 TAC Chapter 213
Effective June 1, 1999

I Zach Lanfear,
Print Name

Environmental Program Manager,
Title - Owner/President/Other

of Texas Department of Transportation (TxDOT),
Corporation/Partnership/Entity Name

have authorized Michael Sexton, PE
Print Name of Agent/Engineer

of Central Texas Regional Mobility Authority (CTRMA)
Print Name of Firm

to represent and act on the behalf of the above named Corporation, Partnership, or Entity for the purpose of preparing and submitting this plan application to the Texas Commission on Environmental Quality (TCEQ) for the review and approval consideration of regulated activities.

I also understand that:

1. The applicant is responsible for compliance with 30 Texas Administrative Code Chapter 213 and any condition of the TCEQ's approval letter. The TCEQ is authorized to assess administrative penalties of up to $10,000 per day per violation.

2. For those submitting an application who are not the property owner, but who have the right to control and possess the property, additional authorization is required from the owner.

3. Application fees are due and payable at the time the application is submitted. The application fee must be sent to the TCEQ cashier or to the appropriate regional office. The application will not be considered until the correct fee is received by the commission.

4. A notarized copy of the Agent Authorization Form must be provided for the person preparing the application, and this form must accompany the completed application.

5. No person shall commence any regulated activity on the Edwards Aquifer Recharge Zone, Contributing Zone or Transition Zone until the appropriate application for the activity has been filed with and approved by the Executive Director.

SIGNATURE PAGE:



Applicant's Signature

12/8/2021

Date

THE STATE OF _____ §

County of _____ §

BEFORE ME, the undersigned authority, on this day personally appeared _____known to me to be the person whose name is subscribed to the foregoing instrument, and acknowledged to me that (s)he executed same for the purpose and consideration therein expressed.

GIVEN under my hand and seal of office on this ____ day of _____,_____.

_____

NOTARY PUBLIC

_____

Typed or Printed Name of Notary

MY COMMISSION EXPIRES: _____

FILE COPY

ORIGINAL
FILED FOR RECORD

Owner Authorization Form

for Required Signature for submitting and signing an application for an Edwards Aquifer Protection Plan (Plan) and conducting regulated activities in accordance with an approved Plan.

Texas Commission on Environmental Quality
Edwards Aquifer Protection Program
Relating to the Edwards Aquifer Rules of
Title 30 of the Texas Administrative Code
(30 TAC), Chapter 213
Effective June 1, 1999

Land Owner Authorization

I, Michael Gates of City of Austin

Land Owner Name (Individual) — Firm (applicable to Legal Entities)

am the Owner of Record or Title Holder of the property located at:

ABS 725 SUR 23 SECREST F G ACR 4.428

(Legal description of the property referenced in the application)

and being duly authorized under 30 TAC § 213.4(c)(2) and § 213.4(d)(1) or § 213.23(c)(2) and § 213.23(d) to submit and sign an application for a Plan, do hereby authorize:

Central Texas Regional Mobility Authority

(Applicant Name / Plan Holder (Legal Entity or Individual))

to conduct:

Modification of an existing water quality pond

(Description of the proposed regulated activities)

on the property described above or at:

(If applicable to a precise location for the authorized regulated activities)

Land Owner Acknowledgement

I, Michael Gates of City of Austin

Land Owner Name (Individual) — Firm (applicable to Legal Entities)

understand that while Central Texas Regional Mobility Authority

Applicant Name / Plan Holder (Legal Entity or Individual)

is responsible for compliance with the approved or conditionally approved Plan and any special conditions of the approved Plan through all phases of Plan implementation,

I, Michael Gates of City of Austin
Land Owner Name (Individual) Firm (applicable to Legal Entities)

as Owner of Record or Title Holder of the property described above, I am ultimately responsible for ensuring that compliance with the approved or conditionally approved Plan and any special conditions of the approved Plan, through all phases of Plan implementation, is achieved even if the responsibility for compliance and the right to possess and control of the property referenced in the application has been contractually assumed by another legal entity.

I, Michael Gates of City of Austin
Land Owner Name (Individual) Firm (applicable to Legal Entities)

further understand that any failure to comply with any condition of the Executive Director's approval is a violation and is subject to administrative rule or orders and penalties as provided under 30 TAC § 213.10 (relating to Enforcement). Such violation may also be subject to civil penalties and injunction.

Land Owner Signature

Land Owner Signature

2-8-2022
Date

THE STATE OF § Texas

County of § Travis

BEFORE ME, the undersigned authority, on this day personally appeared known to me to be the person whose name is subscribed to the foregoing instrument and acknowledged to me that (s)he executed same for the purpose and consideration therein expressed.

GIVEN under my hand and seal of office on this 8th day of February, 2022

NOTARY PUBLIC

DIANA JUSTICE
My Notary ID # 132338601
Expires January 30, 2024

Diana Justice
Typed or Printed Name of Notary

MY COMMISSION EXPIRES: January 30, 2024

Attached: (Mark all that apply)

- ☐ Lease Agreement
- ☐ Signed Contract
- ☐ Deed Recorded Easement
- ☑ Other legally binding document

Applicant Acknowledgement

I, Michael Sexton, PE of Central Texas Regional Mobility Authority
Applicant Name (Individual) Firm (applicable to Legal Entities)

acknowledge that City of Austin
Land Owner Name (Legal Entity or Individual)

has provided Central Texas Regional Mobility Authority
Applicant Name (Legal Entity or Individual)

with the right to possess and control the property referenced in the Edwards Aquifer Protection Plan (Plan).

I understand that Central Texas Regional Mobility Authority
Applicant Name (Legal Entity or Individual)

is responsible, contractually or not, for compliance with the approved or conditionally approved Plan and any special conditions of the approved Plan through all phases of Plan implementation. I further understand that failure to comply with any condition of the Executive Director's approval is a violation and is subject to administrative rule or orders and penalties as provided under § 213.10 (relating to Enforcement). Such violation may also be subject to civil penalties and injunction.

Applicant Signature

Applicant Signature

2/7/2022
Date

THE STATE OF § Texas

County of § Travis.

BEFORE ME, the undersigned authority, on this day personally appeared known to me to be the person whose name is subscribed to the foregoing instrument and acknowledged to me that (s)he executed same for the purpose and consideration therein expressed.

GIVEN under my hand and seal of office on this 7th day of February.

KIM TORRES
Notary Public, State of Texas
My Comm. Exp. 09-25-2022
ID No. 12997296-6

NOTARY PUBLIC

Kim Torres.
Typed or Printed Name of Notary

MY COMMISSION EXPIRES: 9-25-2022

Parcel #02-6302-0301-000

DOC. NO.
92081080

FILM CODE
00004864545

GENERAL WARRANTY DEED

THE STATE OF TEXAS §
§ KNOW ALL MEN BY THESE PRESENTS:
COUNTY OF TRAVIS §

15.00 INDX
3:29 AM 9855 1 1 08/20/92

THAT THE UNDERSIGNED, T. N. Morris, Jr., Trustee, E. J. Hood, Beneficiary and Calcasieu Lumber Company, Beneficiary; hereinafter referred to as "Grantor", whether one or more, for and in consideration of the recited sum of **TEN DOLLARS** ($10.00), and other good and valuable consideration in hand paid by the Grantee, herein named, the receipt and sufficiency of which is hereby fully acknowledged and confessed, has **GRANTED, SOLD** and **CONVEYED**, and by these presents does hereby **GRANT, SELL** and **CONVEY** unto the said City of Austin, a corporation, whose mailing address is Post Office Box 1088, Austin, Texas 78767-1088, Attention: Real Estate Services Division, herein referred to as "Grantee", whether one or more, all Grantor's right, title and interest in and to the real property described on attached Exhibit "A", attached hereto and made apart of herein.

3.00 RECM
3:29 AM 9855 1 1 08/20/92

This conveyance, however, is made and accepted subject to any and all validly existing encumbrances, conditions and restrictions relating to the hereinabove described property as now reflected by the records of the County Clerk of Travis County, Texas.

320810.80-DOC#
115.71-CHK#

TO HAVE AND TO HOLD the above described premises, together with all and singular the rights and appurtenances thereto in anywise belonging unto the said Grantee, Grantee's heirs, executors administrators, successors and/or assigns forever; and Grantor does hereby bind Grantor's heirs, executors, administrators, successors and/or assigns, to **WARRANT AND FOREVER DEFEND** all and singular the said premises unto the said Grantee, Grantee's heirs, executors, administrators, successors and/or assigns, against every person whomsoever claiming or to claim the same or any part thereof.

Current ad valorem taxes on said property having been prorated, the payment thereof is assumed by Grantee.

EXECUTED this 20th day of August, 1992.

T. N. Morris, Jr., Trustee

T. N. Morris, Jr., Trustee

E. J. Hood

E. J. Hood, Beneficiary

Calcasieu Lumber Company
Beneficiary
By: Larry E. Foust, Executive Vice President

Grantee's Address:
City of Austin - Real Estate
P. O. Box 1088
Austin, Texas 78767-1088

REAL PROPERTY RECORDS
TRAVIS COUNTY, TEXAS

11754 1326

UNOFFICIAL COPY

ACKNOWLEDGMENT

STATE OF TEXAS §
§
COUNTY OF TRAVIS §

This instrument was acknowledged before me by T. N. Morris, Jr., on the 20 day of August, 1992.

(SEAL)

Notary Public, State of Texas

Typed or Printed Name

ELIZABETH YOUNG
Notary Public, State of Texas
My Commission Expires
MAY 27, 1996

ACKNOWLEDGMENT

STATE OF TEXAS §
§
COUNTY OF TRAVIS §

This instrument was acknowledged before me by E. J. Hood, on the 20 day of August, 1992.

(SEAL)

Notary Public, State of Texas

Typed or Printed Name

ELIZABETH YOUNG
Notary Public, State of Texas
My Commission Expires
MAY 27, 1996

ACKNOWLEDGMENT

STATE OF TEXAS §
§
COUNTY OF TRAVIS §

This instrument was acknowledged before me by Larry E. Foust, Executive Vice President * on the 20 day of August, 1992.

*of Calcasieu Lumber Company, A Texas Corporation, on behalf of said corporation.

(SEAL)

Notary Public, State of Texas

Typed or Printed Name

ELIZABETH YOUNG
Notary Public, State of Texas
My Commission Expires
MAY 27, 1996

AFTER RECORDING RETURN TO:
City of Austin
Real Estate Services
P.O. Box 1088
Austin, Texas 78767-8839
File #3079.067LSP/VHS/3537

After recording return to:
Title Agency of Austin
3305 Northland Drive
Suite 100
Austin, Texas 78731
GF # 9105728 2-1

ELIZABETH YOUNG
Notary Public, State of Texas
My Commission Expires
MAY 27, 1996

UNOFFICIAL DOCUMENT

EXHIBIT "A"

T.N. Morris, Jr.
Trustee
to
The City of Austin
U.S. Highway 183
Offsite Drainage, Part 2
C.I.P. # 825-607-2074

FIELD NOTES

FIELD NOTES FOR A TRACT OF LAND CONTAINING 4.428 ACRES SITUATED IN THE F. G. SECREST SURVEY No. 23 IN THE CITY OF AUSTIN, TRAVIS COUNTY, TEXAS, WHICH 4.428 ACRE TRACT OF LAND IS OUT OF AND A PART OF THAT CERTAIN 19.68 ACRE TRACT OF LAND LESS AND EXCEPT THE SOUTH 9.023 ACRES AS DESCRIBED IN A SUBSTITUTE TRUSTEE DEED DATED JANUARY 6, 1988, OF RECORD IN VOLUME 10567 AT PAGE 297 OF THE REAL PROPERTY RECORDS OF TRAVIS COUNTY, TEXAS, SAID 4.428 ACRE TRACT OF LAND BEING MORE PARTICULARLY DESCRIBED BY METES AND BOUNDS AS FOLLOWS;

BEGINNING, at an iron pin set at the northeast corner of the herein described tract of land same being a point in the east line of said 19.68 acre (less the south 9.023 acres) tract of land, which line is the west line of that certain tract of land described in an instrument to the Austin Independent School District of record in Volume 11360 at Page 1170 of the Real Property Records of Travis County, Texas, and from which point of beginning an iron pipe set at the northeast corner of the aforesaid 19.68 acre tract of land bears N 29°57'48" E 104.92 feet;

THENCE, with the east line of said 19.68 acre tract of land S 29°57'48" W 475.55 feet to an iron pin found at the southeast corner of the herein described tract of land, same being the southeast corner of said 19.68 acre (less the south 9.023 acres) tract of land;

THENCE, with the south line of said 19.68 acre (less the south 9.023 acres) tract of land, N 77°24'54" W 890.43 feet to an iron pin set at the southwest corner of the herein described tract of land, same being the southwest corner of said 19.68 acre (less the south 9.023 acres) tract of land, which point is in the east right-of-way line of West Cow Path;

UNOFFICIAL DOCUMENT

THENCE, with the east right-of-way of West Cow Path, N 30°12'11" E 93.50 feet to an iron pipe found at a point of curvature;

THENCE, with said curve to the right having an angle of intersection of 4°23'12", a radius of 406.71 feet, an arc distance of 31.14 feet, the chord of which bears N 32°23'48"E 31.13 feet to an iron pipe set at the northwest corner of the herein described tract of land;

THENCE, departing the east right-of-way line of West Cow Path in an easterly direction with the following seven (7) courses and distances;

1. S 85°28'19" E 601.35 feet to an iron pin set at a point of curvature of a curve to the left;

2. Along said curve to the left having an angle of intersection of 19°33'33", a radius of 105.00 feet, an arc distance of 35.84 feet, the chord of which bears N 84°44'51"E 35.67 feet to the point of tangency;

3. N 74°58'01" E 132.27 feet to an iron pin set at a point of curvature of a curve to the left;

4. Along said curve to the left having an angle of intersection of 12°24'27", a radius of 155.00 feet, an arc distance of 33.57 feet, the chord of which bears N 68°45'44" E 33.50 feet to an iron pin set at the point of tangency;

5. N 62°33'34" E 172.17 feet to an iron pin set at a point of curvature;

6. Along said curve to the right having an angle of intersection of 12°24'15", of 31.39 feet, the chord of which bears N 68°45'44" E 31.33 feet to an iron pin set at a point of tangency;

UNOFFICIAL DOCUMENT

7. N 74°57'55" E 69.24 feet to the point of beginning.

FIELD NOTES: Gary Glover
May 4, 1992

FIELDWORK: Ed Sosebee
FB. 3888
Pgs. 53-54

APPROVED:

David M. Segura, RPLS No. 4177
Survey Manager
Department of Public Works and Transportation

STATE OF TEXAS
REGISTERED
DAVID M. SEGURA
4177
PROFESSIONAL
LAND SURVEYOR
5/7/92

REFERENCES

2-A-716 (Bearing basis)
FB. 3826 Pg.26
Sec. Map 1198
T.C.A.D. 2-6302-03-01
Austin Grid J-35-1

Angus1

UNOFFICIAL DOCUMENT

REAL PROPERTY RECORDS
TRAVIS COUNTY, TEXAS

SKETCH TO ACCOMPANY FIELD NOTES

SHEET 1 OF 1

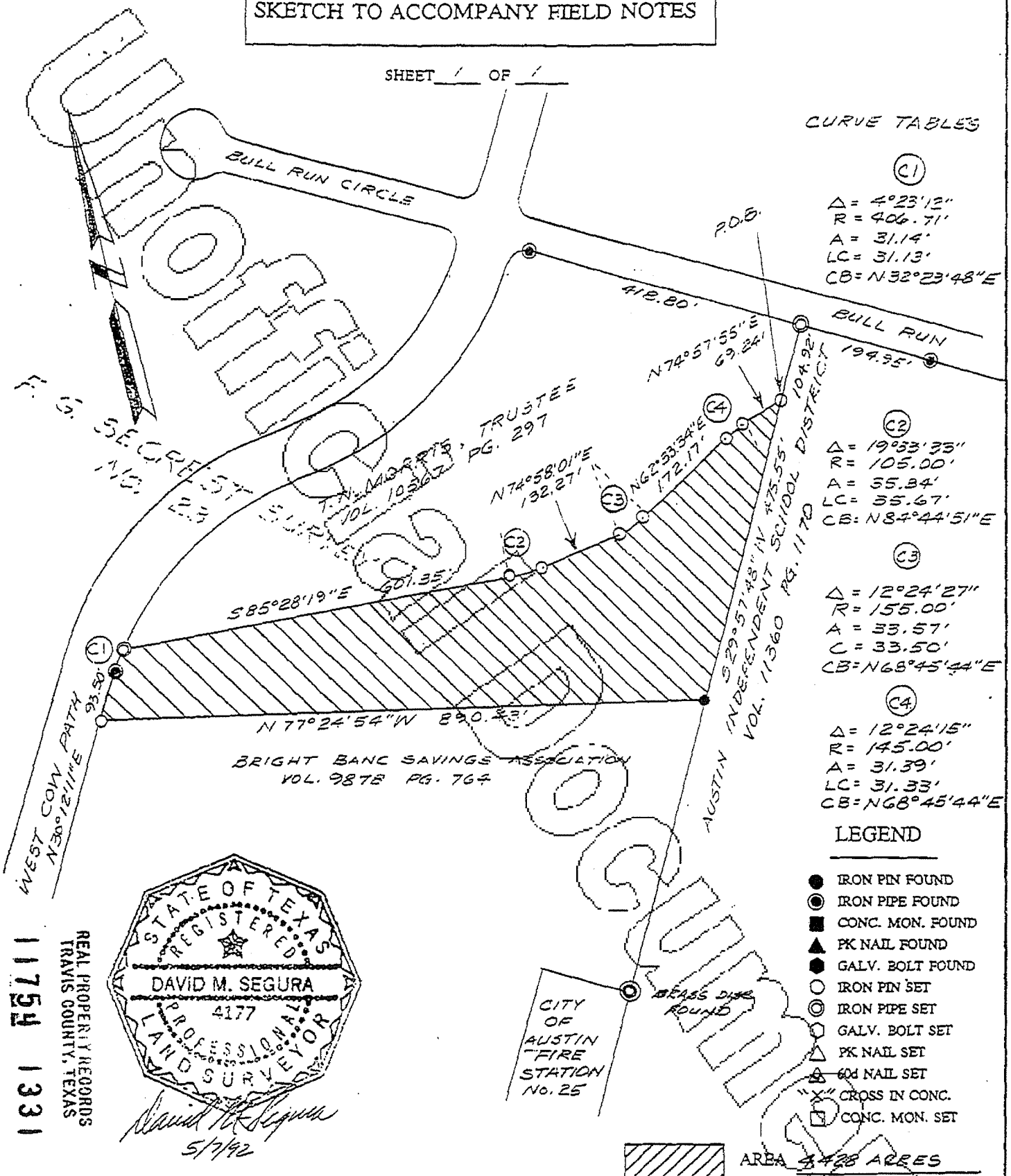

CURVE TABLES

C1
Δ = 4°23'12"
R = 406.71'
A = 31.14'
LC = 31.13'
CB = N32°23'48"E

C2
Δ = 19°33'33"
R = 105.00'
A = 35.84'
LC = 35.67'
CB = N84°44'51"E

C3
Δ = 12°24'27"
R = 155.00'
A = 33.57'
C = 33.50'
CB = N68°45'44"E

C4
Δ = 12°24'15"
R = 145.00'
A = 31.39'
LC = 31.33'
CB = N68°45'44"E

LEGEND

- IRON PIN FOUND
- IRON PIPE FOUND
- CONC. MON. FOUND
- PK NAIL FOUND
- GALV. BOLT FOUND
- IRON PIN SET
- IRON PIPE SET
- GALV. BOLT SET
- PK NAIL SET
- 60d NAIL SET
- "X" CROSS IN CONC.
- CONC. MON. SET

STATE OF TEXAS
REGISTERED
DAVID M. SEGURA
4177
PROFESSIONAL
LAND SURVEYOR

David M. Segura
5/7/92

REAL PROPERTY RECORDS
TRAVIS COUNTY, TEXAS

11754 1331

DEPARTMENT OF PUBLIC WORKS AND TRANSPORTATION
ENGINEERING SUPPORT SECTION
505 BARTON SPRINGS ROAD, SUITE 760
TEL. 499-7165 499-7169

CITY OF AUSTIN FOUNDED 1839

PROJECT NAME : U.S.HWY 183 OFFSITE DRAINAGE-2
DATE : 5-4-92 SCALE : 1"=200'
BEARING BASIS : 2-A-715 DRAWN BY : GREY GLOVER

FILED

92 AUG 20 PM 4:44

DANA DE BEAUVOIR
COUNTY CLERK
TRAVIS COUNTY, TEXAS

STATE OF TEXAS COUNTY OF TRAVIS

I hereby certify that this instrument was FILED on the date and at the time stamped hereon by me; and was duly RECORDED, in the Volume and Page of the named RECORDS of Travis County, Texas, on

AUG 20 1992

COUNTY CLERK
TRAVIS COUNTY, TEXAS

RECORDER'S MEMORANDUM - At the time of recordation this instrument was found to be inadequate for the best photographic reproduction, because of illegibility, carbon or photo copy, discolored paper, etc. All blockouts, additions and changes were present at the time the instrument was filed and recorded.

Unofficial Document

REAL PROPERTY RECORDS
TRAVIS COUNTY, TEXAS

11754 1332

AFTER RECORDING, RETURN TO CITY OF AUSTIN:

City of Austin - Real Estate Services
Attn: Michael Gates – RES 13th Floor
P.O. Box 1088
Austin, Texas 78767

File#: 3111.810
Project Name: West Cow Path Pond
GEO ID: ABS 725 SUR 23 SECREST F G ACR 4.428

COPY
OFFICIAL PUBLIC RECORDS

Rebecca Guerrero, County Clerk
Travis County, Texas

2022026364

Feb 11, 2022 12:14 PM
Fee: $70.00 ANDERSOND

APPLICATION FEE FORM (TCEQ-0574)

Application Fee Form

Texas Commission on Environmental Quality
Name of Proposed Regulated Entity: 183 North Mobility Project (183N)
Regulated Entity Location: Latitude (N): 30.477407 Longitude (W):-97.80141
Name of Customer: Great Hills Constructors
Contact Person: Pat Pluenneke Phone: 512-619-5238
Customer Reference Number (if issued):CN 605967322
Regulated Entity Reference Number (if issued):RN 102756418

Austin Regional Office (3373)

☐ Hays ☒ Travis ☒ Williamson

San Antonio Regional Office (3362)

☐ Bexar ☐ Medina ☐ Uvalde
☐ Comal ☐ Kinney

Application fees must be paid by check, certified check, or money order, payable to the **Texas Commission on Environmental Quality**. Your canceled check will serve as your receipt. **This form must be submitted with your fee payment**. This payment is being submitted to:

☒ Austin Regional Office
☐ Mailed to: TCEQ - Cashier
Revenues Section
Mail Code 214
P.O. Box 13088
Austin, TX 78711-3088

☐ San Antonio Regional Office
☒ Overnight Delivery to: TCEQ - Cashier
12100 Park 35 Circle
Building A, 3rd Floor
Austin, TX 78753
(512)239-0357

Site Location (Check All That Apply):

☒ Recharge Zone ☐ Contributing Zone ☒ Transition Zone

Type of Plan	***Size***	***Fee Due***
Water Pollution Abatement Plan, Contributing Zone Plan: One Single Family Residential Dwelling	Acres	$
Water Pollution Abatement Plan, Contributing Zone Plan: Multiple Single Family Residential and Parks	Acres	$
Water Pollution Abatement Plan, Contributing Zone Plan: Non-residential	627.8 Acres	$ 10,000
Sewage Collection System	L.F.	$
Lift Stations without sewer lines	Acres	$
Underground or Aboveground Storage Tank Facility	0 Tanks	$ 0
Piping System(s)(only)	Each	$
Exception	Each	$
Extension of Time	Each	$

Signature: Pat Pluenneke

Date: 1/29/2024

Application Fee Schedule

Texas Commission on Environmental Quality
Edwards Aquifer Protection Program 30 TAC Chapter 213 (effective 05/01/2008)

Water Pollution Abatement Plans and Modifications

Contributing Zone Plans and Modifications

Project	*Project Area in Acres*	*Fee*
One Single Family Residential Dwelling	< 5	$650
Multiple Single Family Residential and Parks	< 5 5 < 10 10 < 40 40 < 100 100 < 500 ≥ 500	$1,500 $3,000 $4,000 $6,500 $8,000 $10,000
Non-residential (Commercial, industrial, institutional, multi-family residential, schools, and other sites where regulated activities will occur)	< 1 1 < 5 5 < 10 10 < 40 40 < 100 ≥ 100	$3,000 $4,000 $5,000 $6,500 $8,000 $10,000

Organized Sewage Collection Systems and Modifications

Project	*Cost per Linear Foot*	*Minimum Fee-Maximum Fee*
Sewage Collection Systems	$0.50	$650 - $6,500

Underground and Aboveground Storage Tank System Facility Plans and Modifications

Project	*Cost per Tank or Piping System*	*Minimum Fee-Maximum Fee*
Underground and Aboveground Storage Tank Facility	$650	$650 - $6,500

Exception Requests

Project	*Fee*
Exception Request	$500

Extension of Time Requests

Project	*Fee*
Extension of Time Request	$150

CORE DATA FORM (TCEQ-10400)

TCEQ Core Data Form

TCEQ Use Only

For detailed instructions regarding completion of this form, please read the Core Data Form Instructions or call 512-239-5175.

SECTION I: General Information

1. Reason for Submission *(If other is checked please describe in space provided.)*

☒ New Permit, Registration or Authorization *(Core Data Form should be submitted with the program application.)*

☐ Renewal *(Core Data Form should be submitted with the renewal form)* ☐ Other

2. Customer Reference Number *(if issued)*	Follow this link to search for CN or RN numbers in Central Registry**	3. Regulated Entity Reference Number *(if issued)*
CN 605967322		RN 102756418

SECTION II: Customer Information

4. General Customer Information	5. Effective Date for Customer Information Updates (mm/dd/yyyy)	1/22/2024

☒ New Customer ☐ Update to Customer Information ☐ Change in Regulated Entity Ownership

☐ Change in Legal Name (Verifiable with the Texas Secretary of State or Texas Comptroller of Public Accounts)

The Customer Name submitted here may be updated automatically based on what is current and active with the Texas Secretary of State (SOS) or Texas Comptroller of Public Accounts (CPA).

6. Customer Legal Name *(If an individual, print last name first: eg: Doe, John)*	*If new Customer, enter previous Customer below:*
Great Hills Constructors	TxDOT

7. TX SOS/CPA Filing Number	8. TX State Tax ID (11 digits)	9. Federal Tax ID (9 digits)	10. DUNS Number *(if applicable)*

11. Type of Customer: ☐ Corporation ☐ Individual Partnership: ☐ General ☒ Limited

Government: ☐ City ☐ County ☐ Federal ☐ State ☐ Other ☐ Sole Proprietorship ☒ Other: Joint Venture

12. Number of Employees ☐ 0-20 ☒ 21-100 ☐ 101-250 ☐ 251-500 ☐ 501 and higher

13. Independently Owned and Operated? ☐ Yes ☒ No

14. Customer Role (Proposed or Actual) – *as it relates to the Regulated Entity listed on this form. Please check one of the following*

☐ Owner ☐ Operator ☒ Owner & Operator

☐ Occupational Licensee ☐ Responsible Party ☐ Voluntary Cleanup Applicant ☒ Other: Constructor

15. Mailing Address:	9430 Research Blvd						
	Building 4, Suite 400						
	City	Austin	State	TX	ZIP	78759	ZIP + 4

16. Country Mailing Information *(if outside USA)*	17. E-Mail Address *(if applicable)*
	ppluenneke@walshgroup.com

18. Telephone Number	19. Extension or Code	20. Fax Number *(if applicable)*
(512) 619-5238		( ) -

SECTION III: Regulated Entity Information

21. General Regulated Entity Information *(If 'New Regulated Entity" is selected below this form should be accompanied by a permit application)*

☒ New Regulated Entity ☐ Update to Regulated Entity Name ☐ Update to Regulated Entity Information

The Regulated Entity Name submitted may be updated in order to meet TCEQ Agency Data Standards (removal of organizational endings such as Inc, LP, or LLC).

22. Regulated Entity Name *(Enter name of the site where the regulated action is taking place.)*

183 North Mobility Project (183N)

23. Street Address of the Regulated Entity: *(No PO Boxes)*								
	City		State		ZIP		ZIP + 4	
24. County								

Enter Physical Location Description if no street address is provided.

25. Description to Physical Location:	The Project extends generally from State Highway (SH) 45 North/Ranch-to-Market (RM) 620 to State Loop 1 (MoPac), approximately nine miles.

26. Nearest City	State	Nearest ZIP Code
Austin	TX	78759

27. Latitude (N) In Decimal:	30.477407		28. Longitude (W) In Decimal:	-97.801041	
Degrees	Minutes	Seconds	Degrees	Minutes	Seconds
30	28	39	97	48	04

29. Primary SIC Code (4 digits)	30. Secondary SIC Code (4 digits)	31. Primary NAICS Code (5 or 6 digits)	32. Secondary NAICS Code (5 or 6 digits)

33. What is the Primary Business of this entity? *(Do not repeat the SIC or NAICS description.)*

Roads Highways Toll Roads

34. Mailing Address:								
	City	Austin	State	TX	ZIP	78759	ZIP + 4	

35. E-Mail Address:		
36. Telephone Number	37. Extension or Code	38. Fax Number *(if applicable)*
( ) -		( ) -

39. TCEQ Programs and ID Numbers Check all Programs and write in the permits/registration numbers that will be affected by the updates submitted on this form. See the Core Data Form instructions for additional guidance.

☐ Dam Safety	☐ Districts	☒ Edwards Aquifer	☐ Emissions Inventory Air	☐ Industrial Hazardous Waste
☐ Municipal Solid Waste	☐ New Source Review Air	☐ OSSF	☐ Petroleum Storage Tank	☐ PWS
☐ Sludge	☒ Storm Water	☐ Title V Air	☐ Tires	☐ Used Oil
☐ Voluntary Cleanup	☐ Waste Water	☐ Wastewater Agriculture	☐ Water Rights	☐ Other:

SECTION IV: Preparer Information

40. Name:	Michael Bauer, P.E.	41. Title:	Director of Design-Build

42. Telephone Number	43. Ext./Code	44. Fax Number	45. E-Mail Address
(214) 708-6528		( ) -	mbauer@walshgroup.com

SECTION V: Authorized Signature

46. By my signature below, I certify, to the best of my knowledge, that the information provided in this form is true and complete, and that I have signature authority to submit this form on behalf of the entity specified in Section II, Field 6 and/or as required for the updates to the ID numbers identified in field 39.

Company:	Great Hills Constructors	Job Title:	Projec Manager
Name *(In Print)*:	Pat Pluenneke	Phone:	(512) 619- 5238
Signature:	Pat Pluenneke	Date:	2-2-2024

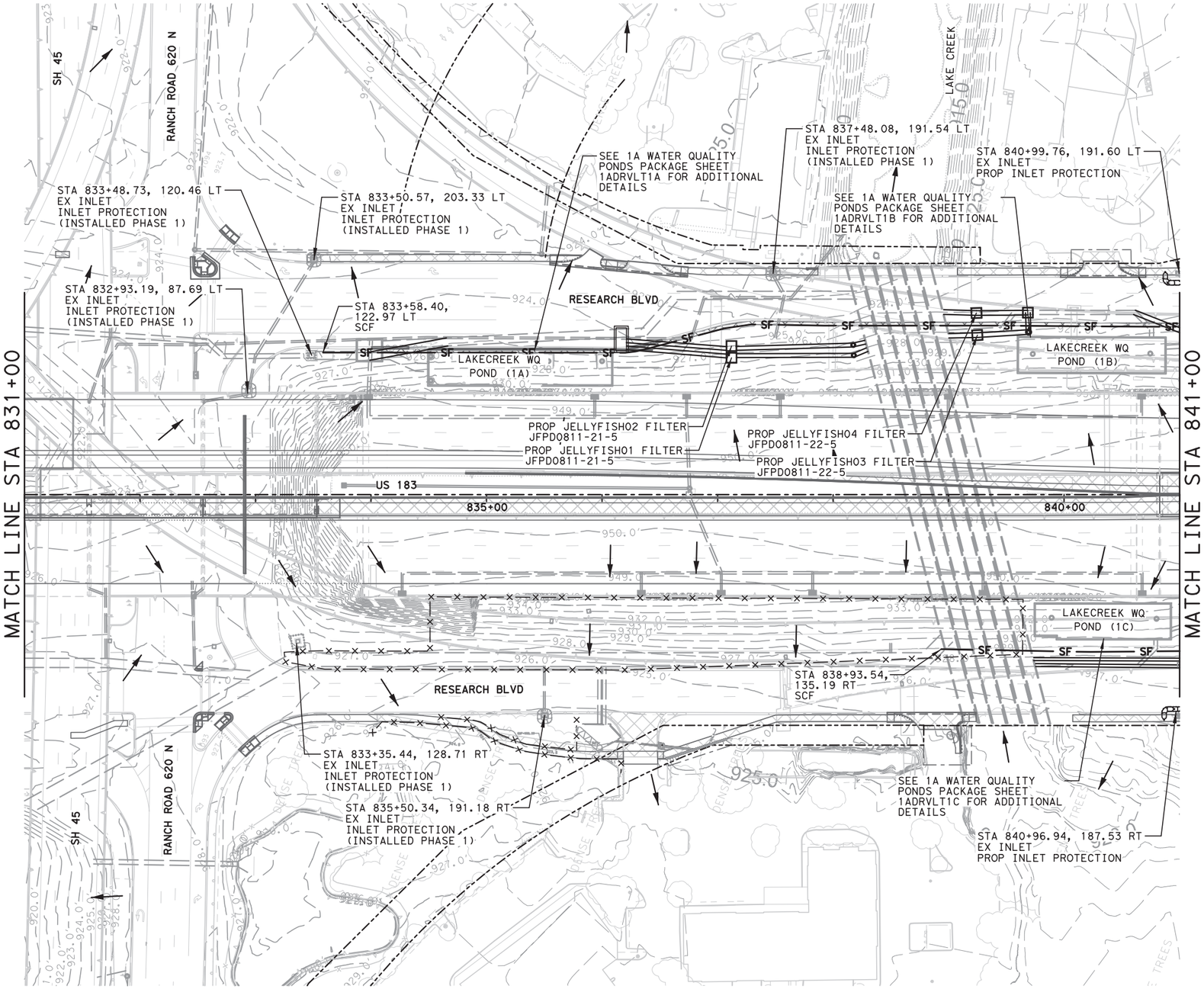

NOTE:
PHASE 1 BMP'S TO REMAIN IN PLACE UNTIL COMPLETION OF PAVEMENT UPSTREAM OF THE BMP.

NOTE:
FOR WATER QUALITY BASINS UNDER CONSTRUCTION. BASIN OUTFALL WILL BE CLOSED AND THE BASIN WILL BE DEWATERED AS NEEDED. WATER TO BE PUMPED THROUGH DEWATERING BAGS TO ENSURE REMOVAL OF SEDIMENT.

HORIZONTAL SCALE
0' 50' 100'

LEGEND

- SURFACE FLOW DIRECTION
- EXISTING DRAINAGE
- DRAINAGE INSTALLED DURING PH 1
- PROPOSED DRAINAGE
- DRAINAGE DITCH
- TREE PROTECTION
- ROCK FILTER DAM
- SF — SILT FENCE
- SILT FENCE INLET PROTECTION
- GRAVEL BAG INLET PROTECTION
- SF — SILT FENCE, INSTALLED IN PH 1
- SILT FENCE INLET PROTECTION, INSTALLED IN PH 1
- GRAVEL BAG INLET PROTECTION, INSTALLED IN PH 1
- EROSION CONTROL LOG
- CURRENT ROADWAY CONSTRUCTION
- CURRENT BRIDGE CONSTRUCTION
- COMPLETED CONSTRUCTION
- ROW — CONTROL OF ACCESS
- TEMPORARY CONSTRUCTION EASEMENT

RELEASED FOR CONSTRUCTION Date: 2024.02.02 14:45:27 -06'00'

STATE OF TEXAS
PATRICK M. GIBBONS
113697
LICENSED PROFESSIONAL ENGINEER

Date: 2024.02.02 14:44:49 -06'00'

ISSUE RECORD

NO.	DESCRIPTION	DATE
00	RFC DESIGN	01SEP22

CENTRAL TEXAS REGIONAL MOBILITY AUTHORITY

GREAT HILLS CONSTRUCTORS

PARSONS
TBPE Registration No. F-1481

183 NORTH MOBILITY
SEGMENT 1A
STORM WATER POLLUTION PREVENTION PLAN, PHASE 2
STA 831+00 TO STA 841+00

DESIGNED	FED. RD. DIV. NO.		FEDERAL AID PROJECT NO.	HIGHWAY NO.
HM	6			US 183
DRAWN	STATE	DISTRICT	COUNTY	DRAWING
RG	TEXAS	AUSTIN	TRAVIS, WILLIAMSON	1ASWP205
CHECKED	CONTROL	SECTION	JOB	SHEET NO.
MM	0151	06	143	SW2019
APPROVED				
CB				

User: p003330E Date: 1/30/2024 Time: 11:15:34 AM Pen Table: 183N_Standard.tbl Plot Config: 183N PDF.pltcfg
File Name: 1A-SWP2-05.dgn

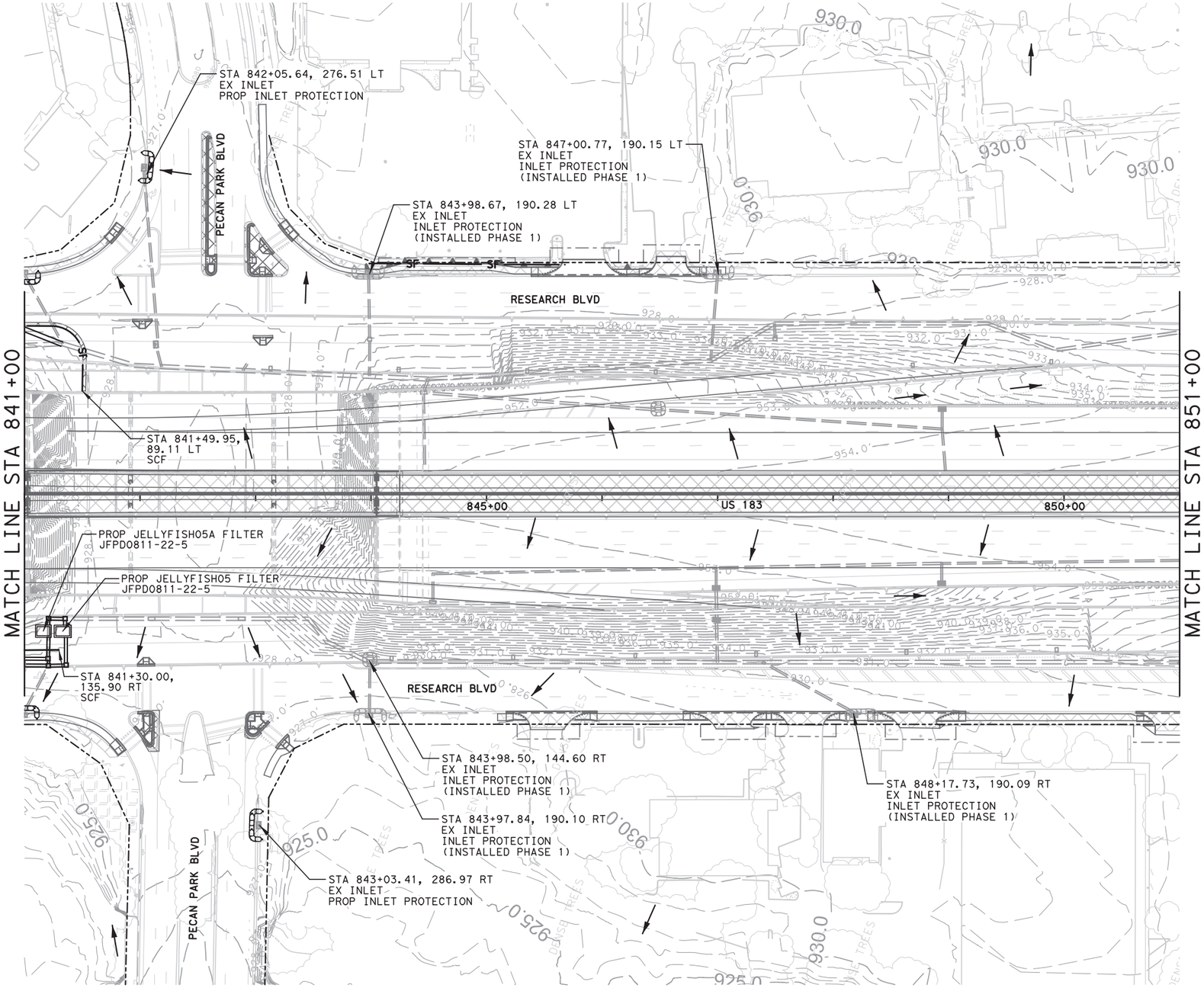

NOTE:
PHASE 1 BMP'S TO REMAIN IN PLACE UNTIL COMPLETION OF PAVEMENT UPSTREAM OF THE BMP.

HORIZONTAL SCALE
0' 50' 100'

LEGEND

- SURFACE FLOW DIRECTION
- EXISTING DRAINAGE
- DRAINAGE INSTALLED DURING PH 1
- PROPOSED DRAINAGE
- DRAINAGE DITCH
- TREE PROTECTION
- ROCK FILTER DAM
- SILT FENCE
- SILT FENCE INLET PROTECTION
- GRAVEL BAG INLET PROTECTION
- SILT FENCE, INSTALLED IN PH 1
- SILT FENCE INLET PROTECTION, INSTALLED IN PH 1
- GRAVEL BAG INLET PROTECTION, INSTALLED IN PH 1
- EROSION CONTROL LOG
- CURRENT ROADWAY CONSTRUCTION
- CURRENT BRIDGE CONSTRUCTION
- COMPLETED CONSTRUCTION
- ROW
- CONTROL OF ACCESS
- TEMPORARY CONSTRUCTION EASEMENT

RELEASED FOR CONSTRUCTION Date: 2024.02.02 14:45:29 -06'00'

STATE OF TEXAS
PATRICK M. GIBBONS
113697
LICENSED PROFESSIONAL ENGINEER

Date: 2024.02.02 14:44:51 -06'00'

ISSUE RECORD

NO.	DESCRIPTION	DATE
00	RFC DESIGN	01SEP22

CENTRAL TEXAS REGIONAL MOBILITY AUTHORITY

GREAT HILLS CONSTRUCTORS

PARSONS
TBPE Registration No. F-1481

183 NORTH MOBILITY
SEGMENT 1A
STORM WATER POLLUTION PREVENTION PLAN, PHASE 2
STA 841+00 TO STA 851+00

DESIGNED	FED. RD. DIV. NO.		FEDERAL AID PROJECT NO.	HIGHWAY NO.
HM	6			US 183
DRAWN	STATE	DISTRICT	COUNTY	DRAWING
RG	TEXAS	AUSTIN	TRAVIS, WILLIAMSON	1ASWP206
CHECKED	CONTROL	SECTION	JOB	SHEET NO.
MM	0151	06	143	SW2020
APPROVED				
CB				

User: p003330E Date: 1/30/2024 Time: 11:15:48 AM Pen Table: 183N_Standard.tbl Plot Config: 183N PDF.pltcfg
File Name: 1A-SWP2-06.dgn

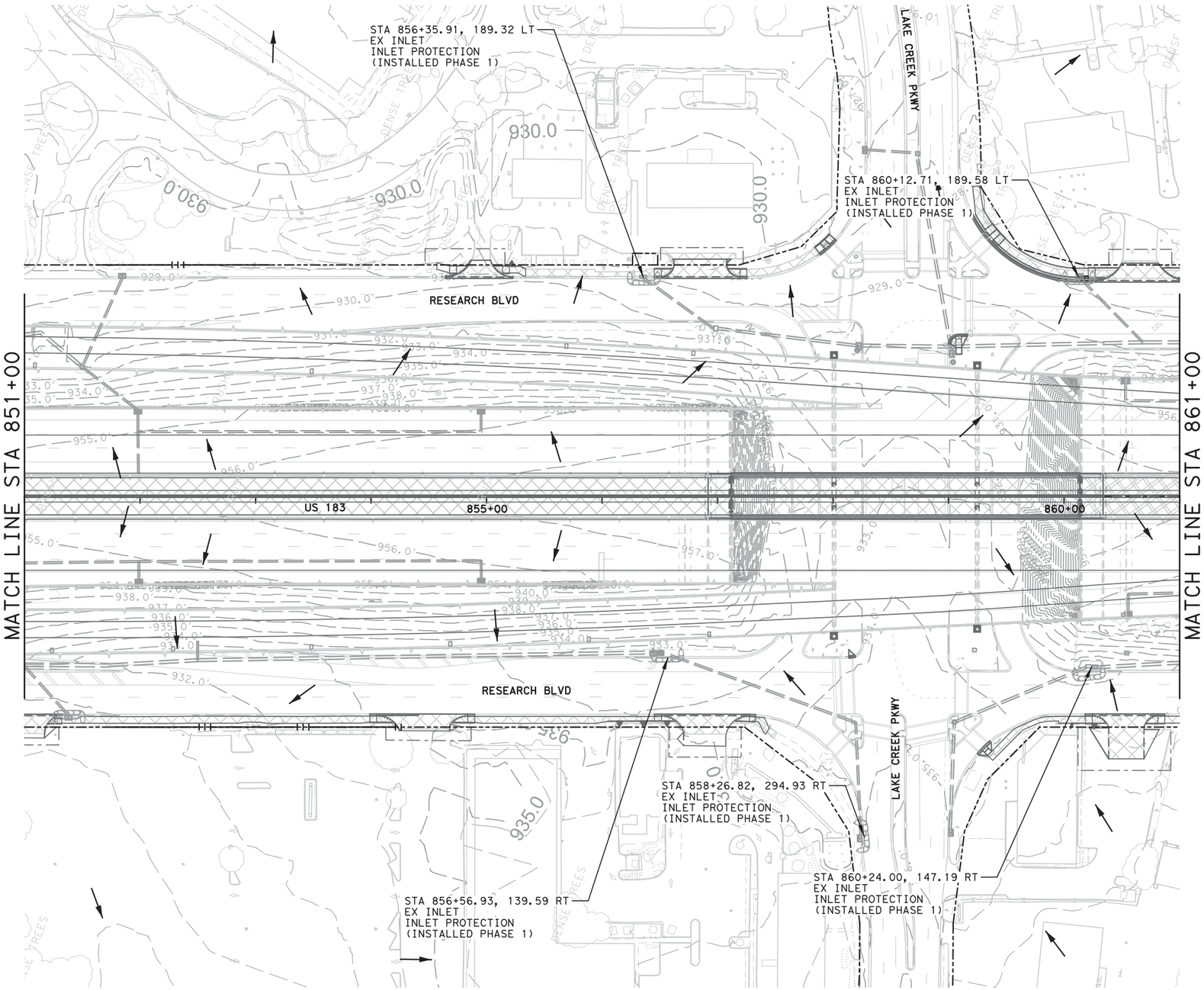

HORIZONTAL SCALE
0′ 50′ 100′

LEGEND

- SURFACE FLOW DIRECTION
- EXISTING DRAINAGE
- DRAINAGE INSTALLED DURING PH 1
- PROPOSED DRAINAGE
- DRAINAGE DITCH
- TREE PROTECTION
- ROCK FILTER DAM
- SF — SILT FENCE
- SILT FENCE INLET PROTECTION
- GRAVEL BAG INLET PROTECTION
- SF — SILT FENCE, INSTALLED IN PH 1
- SILT FENCE INLET PROTECTION, INSTALLED IN PH 1
- GRAVEL BAG INLET PROTECTION, INSTALLED IN PH 1
- EROSION CONTROL LOG
- CURRENT ROADWAY CONSTRUCTION
- CURRENT BRIDGE CONSTRUCTION
- COMPLETED CONSTRUCTION
- ROW — CONTROL OF ACCESS
- TEMPORARY CONSTRUCTION EASEMENT

NOTE:
PHASE 1 BMP'S TO REMAIN IN PLACE UNTIL COMPLETION OF PAVEMENT UPSTREAM OF THE BMP.

RELEASED FOR CONSTRUCTION Date: 2024.02.02 14:45:31 -06'00'

STATE OF TEXAS
PATRICK M. GIBBONS
113697
LICENSED PROFESSIONAL ENGINEER

Date: 2024.02.02 14:44:53 -06'00'

ISSUE RECORD

NO.	DESCRIPTION	DATE
00	RFC DESIGN	01SEP22

CENTRAL TEXAS REGIONAL MOBILITY AUTHORITY

GREAT HILLS CONSTRUCTORS

PARSONS
TBPE Registration No. F-1481

183 NORTH MOBILITY
SEGMENT 1A
STORM WATER POLLUTION PREVENTION PLAN, PHASE 2
STA 851+00 TO STA 861+00

DESIGNED	FED. RD. DIV. NO.		FEDERAL AID PROJECT NO.	HIGHWAY NO.
HM	6			US 183
DRAWN	STATE	DISTRICT	COUNTY	DRAWING
RG	TEXAS	AUSTIN	TRAVIS, WILLIAMSON	1ASWP207
CHECKED	CONTROL	SECTION	JOB	SHEET NO.
MM	0151	06	143	SW2021
APPROVED				
CB				

User: p003330E Date: 1/30/2024 Time: 11:16:02 AM Pen Table: 183N_Standard.tbl Plot Config: 183N PDF.pltcfg
File Name: 1A-SWP2-07.dgn

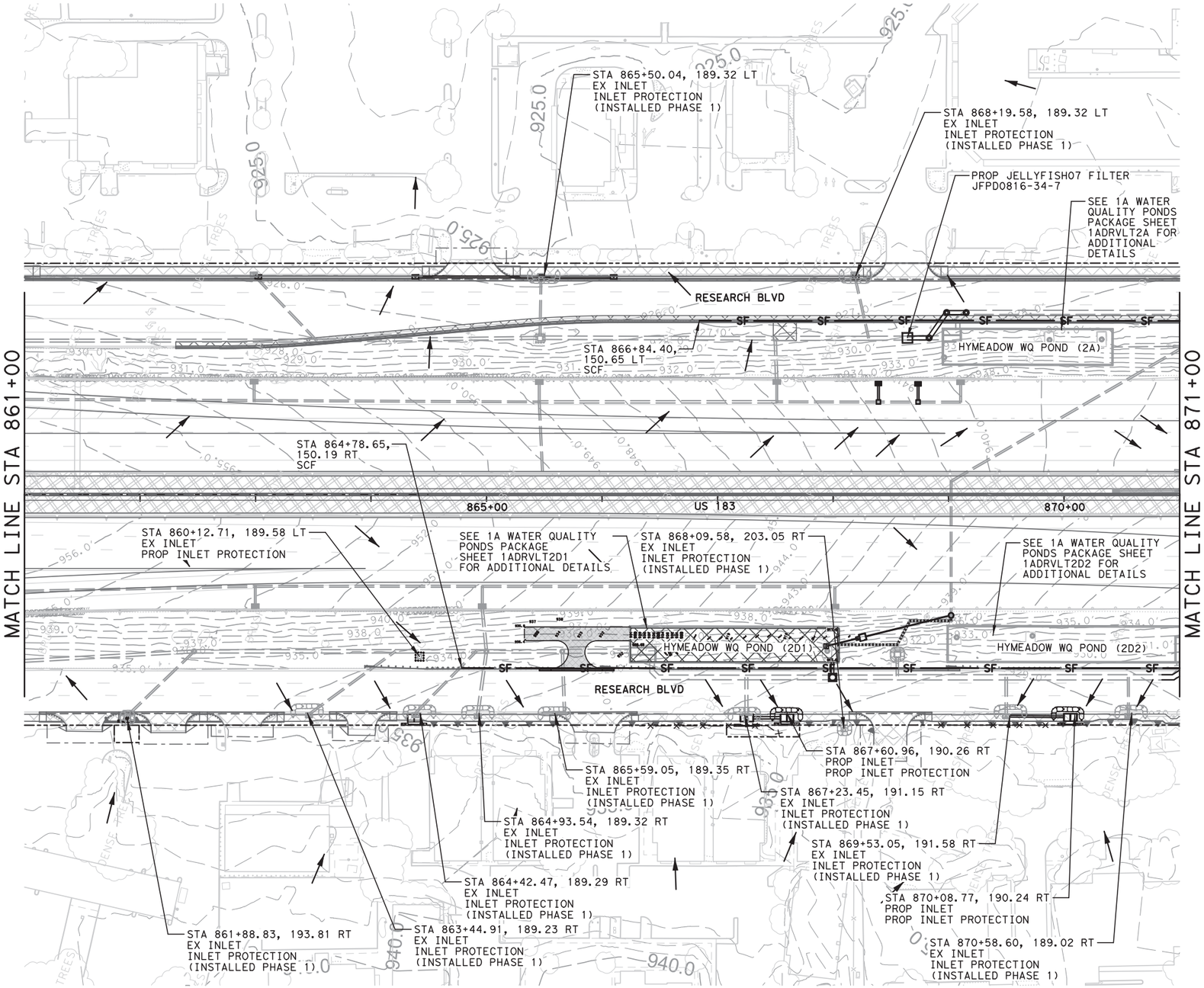

NOTE:
PHASE 1 BMP'S TO REMAIN IN PLACE UNTIL COMPLETION OF PAVEMENT UPSTREAM OF THE BMP.

NOTE:
FOR WATER QUALITY BASINS UNDER CONSTRUCTION. BASIN OUTFALL WILL BE CLOSED AND THE BASIN WILL BE DEWATERED AS NEEDED. WATER TO BE PUMPED THROUGH DEWATERING BAGS TO ENSURE REMOVAL OF SEDIMENT.

HORIZONTAL SCALE
0' 50' 100'

LEGEND

- SURFACE FLOW DIRECTION
- EXISTING DRAINAGE
- DRAINAGE INSTALLED DURING PH 1
- PROPOSED DRAINAGE
- DRAINAGE DITCH
- TREE PROTECTION
- ROCK FILTER DAM
- SF — SILT FENCE
- SILT FENCE INLET PROTECTION
- GRAVEL BAG INLET PROTECTION
- SF — SILT FENCE, INSTALLED IN PH 1
- SILT FENCE INLET PROTECTION, INSTALLED IN PH 1
- GRAVEL BAG INLET PROTECTION, INSTALLED IN PH 1
- EROSION CONTROL LOG
- CURRENT ROADWAY CONSTRUCTION
- CURRENT BRIDGE CONSTRUCTION
- COMPLETED CONSTRUCTION
- ROW — CONTROL OF ACCESS
- TEMPORARY CONSTRUCTION EASEMENT

RELEASED FOR CONSTRUCTION Date: 2024.02.02 14:45:33 -06'00'

STATE OF TEXAS
PATRICK M. GIBBONS
113697
LICENSED PROFESSIONAL ENGINEER

Patrick M. Gibbons

Date: 2024.02.02 14:44:55 -06'00'

ISSUE RECORD

NO.	DESCRIPTION	DATE
00	RFC DESIGN	01SEP22

CENTRAL TEXAS REGIONAL MOBILITY AUTHORITY

GREAT HILLS CONSTRUCTORS

PARSONS
TBPE Registration No. F-1481

183 NORTH MOBILITY
SEGMENT 1A
STORM WATER POLLUTION PREVENTION PLAN, PHASE 2
STA 861+00 TO STA 871+00

DESIGNED	FED. RD. DIV. NO.		FEDERAL AID PROJECT NO.	HIGHWAY NO.
HM	6			US 183
DRAWN	STATE	DISTRICT	COUNTY	DRAWING
RG	TEXAS	AUSTIN	TRAVIS, WILLIAMSON	1ASWP208
CHECKED	CONTROL	SECTION	JOB	SHEET NO.
MM	0151	06	143	SW2022
APPROVED				
CB				

User: p0033330E Date: 1/30/2024 Time: 11:16:15 AM Pen Table: 183N_Standard.tbl Plot Config: 183N PDF.pltcfg
File Name: 1A-SWP2-08.dgn

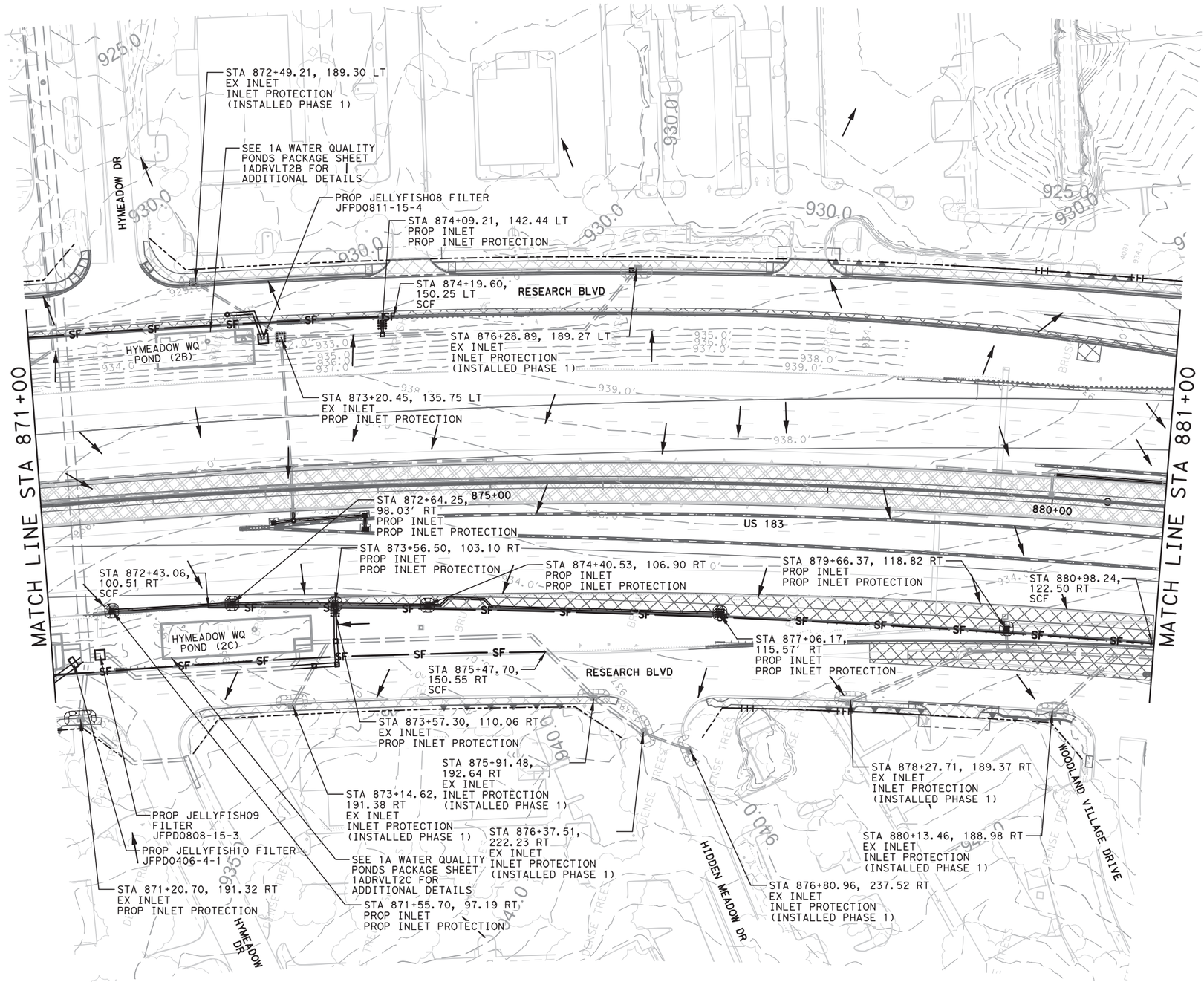

NOTE:
PHASE 1 BMP'S TO REMAIN IN PLACE UNTIL COMPLETION OF PAVEMENT UPSTREAM OF THE BMP.

NOTE:
FOR WATER QUALITY BASINS UNDER CONSTRUCTION. BASIN OUTFALL WILL BE CLOSED AND THE BASIN WILL BE DEWATERED AS NEEDED. WATER TO BE PUMPED THROUGH DEWATERING BAGS TO ENSURE REMOVAL OF SEDIMENT.

HORIZONTAL SCALE
0' 50' 100'

LEGEND

- SURFACE FLOW DIRECTION
- EXISTING DRAINAGE
- DRAINAGE INSTALLED DURING PH 1
- PROPOSED DRAINAGE
- DRAINAGE DITCH
- TREE PROTECTION
- ROCK FILTER DAM
- SF — SILT FENCE
- SILT FENCE INLET PROTECTION
- GRAVEL BAG INLET PROTECTION
- SF — SILT FENCE, INSTALLED IN PH 1
- SILT FENCE INLET PROTECTION, INSTALLED IN PH 1
- GRAVEL BAG INLET PROTECTION, INSTALLED IN PH 1
- EROSION CONTROL LOG
- CURRENT ROADWAY CONSTRUCTION
- CURRENT BRIDGE CONSTRUCTION
- COMPLETED CONSTRUCTION
- ROW — CONTROL OF ACCESS
- TEMPORARY CONSTRUCTION EASEMENT

RELEASED FOR CONSTRUCTION Date: 2024.02.02 14:45:35 -06'00'

STATE OF TEXAS
PATRICK M. GIBBONS
113697
LICENSED PROFESSIONAL ENGINEER

Patrick M. Gibbons

Date: 2024.02.02 14:44:57 -06'00'

ISSUE RECORD

NO.	DESCRIPTION	DATE
00	RFC DESIGN	01SEP22

CENTRAL TEXAS REGIONAL MOBILITY AUTHORITY

GREAT HILLS CONSTRUCTORS

PARSONS
TBPE Registration No. F-1481

183 NORTH MOBILITY
SEGMENT 1A
STORM WATER POLLUTION PREVENTION PLAN, PHASE 2
STA 871+00 TO STA 881+00

DESIGNED	FED. RD. DIV. NO.		FEDERAL AID PROJECT NO.	HIGHWAY NO.
HM	6			US 183
DRAWN	STATE	DISTRICT	COUNTY	DRAWING
RG	TEXAS	AUSTIN	TRAVIS, WILLIAMSON	1ASWP209
CHECKED	CONTROL	SECTION	JOB	SHEET NO.
MM	0151	06	143	SW2023
APPROVED				
CB				

User: p003330E Date: 1/30/2024 Time: 11:27:09 AM Pen Table: 183N_Standard.tbl Plot Config: 183N PDF.pltcfg
File Name: 1A-SWP2-09.dgn

INCLUDED	SHEET	REV	DATE	DESCRIPTION
				GENERAL SHEETS
	1ADRCO02	00	16NOV22	SEGMENT 1A PROPOSED DRAINAGE TITLE SHEET
x	1ADRIN01	07	05JAN24	SEGMENT 1A PROPOSED DRAINAGE PLANS INDEX 1 OF 2
x	1ADRIN02	07	05JAN24	SEGMENT 1A PROPOSED DRAINAGE PLANS INDEX 2 OF 2
	1ADRIN03	00	16NOV22	DRAINAGE STANDARDS INDEX - SHEET 1 OF 3
	1ADRIN04	01	10JUL23	DRAINAGE STANDARDS INDEX - SHEET 2 OF 3
	1ADRIN05	00	16NOV22	DRAINAGE STANDARDS INDEX - SHEET 3 OF 3
	1ADRKEY	00	16NOV22	SEGMENT 1A PROPOSED DRAINAGE PLANS KEY MAP
				DRAINAGE AREA MAPS
	1ADREDM01	01	20DEC23	SEGMENT 1A - PROPOSED DRAINAGE AREA PLAN - OFFSITE DRAINAGE AREAS
	1ADREDM02	01	20DEC23	SEGMENT 1A - PROPOSED DRAINAGE AREA PLAN - OFFSITE DRAINAGE AREAS
	1ADREDM03	00	16NOV22	SEGMENT 1A - PROPOSED DRAINAGE AREA PLAN - OFFSITE DRAINAGE AREAS
	1ADREDM04	00	16NOV22	SEGMENT 1A - PROPOSED DRAINAGE AREA PLAN - OFFSITE DRAINAGE AREAS
	1ADRDM01A	00	16NOV22	SEGMENT 1A - PROPOSED DRAINAGE AREA PLAN - STA 781+00 TO STA 791+00
	1ADRDM01	00	16NOV22	SEGMENT 1A - PROPOSED DRAINAGE AREA PLAN - STA 791+00 TO STA 801+00
	1ADRDM02	00	16NOV22	SEGMENT 1A - PROPOSED DRAINAGE AREA PLAN - STA 801+00 TO STA 811+00
	1ADRDM03	00	16NOV22	SEGMENT 1A - PROPOSED DRAINAGE AREA PLAN - STA 811+00 TO STA 821+00
	1ADRDM04	00	16NOV22	SEGMENT 1A - PROPOSED DRAINAGE AREA PLAN - STA 821+00 TO STA 831+00
	1ADRDM05	01	20DEC23	SEGMENT 1A - PROPOSED DRAINAGE AREA PLAN - STA 831+00 TO STA 841+00
	1ADRDM06	01	20DEC23	SEGMENT 1A - PROPOSED DRAINAGE AREA PLAN - STA 841+00 TO STA 851+00
	1ADRDM07	00	16NOV22	SEGMENT 1A - PROPOSED DRAINAGE AREA PLAN - STA 851+00 TO STA 861+00
	1ADRDM08	01	20DEC23	SEGMENT 1A - PROPOSED DRAINAGE AREA PLAN - STA 861+00 TO STA 871+00
	1ADRDM09	01	20DEC23	SEGMENT 1A - PROPOSED DRAINAGE AREA PLAN - STA 871+00 TO STA 881+00
	1ADRDM10	01	27OCT23	SEGMENT 1A - PROPOSED DRAINAGE AREA PLAN - STA 881+00 TO STA 891+00
	1ADRDM11	00	16NOV22	SEGMENT 1A - PROPOSED DRAINAGE AREA PLAN - STA 891+00 TO STA 901+00
	1ADRDM12	00	16NOV22	SEGMENT 1A - PROPOSED DRAINAGE AREA PLAN - STA 901+00 TO STA 911+00
	1ADRDM13	00	16NOV22	SEGMENT 1A - PROPOSED DRAINAGE AREA PLAN - STA 911+00 TO STA 921+00
	1ADRDM14	00	16NOV22	SEGMENT 1A - PROPOSED DRAINAGE AREA PLAN - STA 921+00 TO STA 931+00
	1ADRDM15	00	16NOV22	SEGMENT 1A - PROPOSED DRAINAGE AREA PLAN - STA 931+00 TO STA 941+00
	1ADRDM16	01	11APR23	SEGMENT 1A - PROPOSED DRAINAGE AREA PLAN - STA 941+00 TO STA 949+00
	1ADRDM17	00	16NOV22	SEGMENT 1A - PROPOSED DRAINAGE AREA PLAN - STA 949+00 TO STA 955+95
				PROPOSED DRAINAGE PLANS
	1ADRDL01	00	16NOV22	SEGMENT 1A - DRAINAGE PLAN - STA BEGIN TO STA 801+00
	1ADRDL02	02	04AUG23	SEGMENT 1A - DRAINAGE PLAN - STA 801+00 TO STA 811+00
	1ADRPR02	00	16NOV22	SEGMENT 1A - DRAINAGE PROFILES - STA 801+00 TO STA 811+00
	1ADRDL03	00	16NOV22	SEGMENT 1A - DRAINAGE PLAN - STA 811+00 TO STA 821+00
	1ADRPR03	00	16NOV22	SEGMENT 1A - DRAINAGE PROFILES - STA 811+00 TO STA 821+00
	1ADRDL04	01	04AUG23	SEGMENT 1A - DRAINAGE PLAN - STA 821+00 TO STA 831+00
	1ADRPR04	01	04AUG23	SEGMENT 1A - DRAINAGE PROFILES - STA 821+00 TO STA 831+00
	1ADRDL05	01	20DEC23	SEGMENT 1A - DRAINAGE PLAN - STA 831+00 TO STA 841+00 - SHEET 1 OF 2
	1ADRDL05A	01	20DEC23	SEGMENT 1A - DRAINAGE PLAN - STA 831+00 TO STA 841+00 - SHEET 2 OF 2
	1ADRPR05	01	05MAY23	SEGMENT 1A - DRAINAGE PROFILES - STA 831+00 TO STA 841+00
	1ADRPR05A	00	16NOV22	SEGMENT 1A - DRAINAGE PROFILES - STA 831+00 TO STA 841+00
	1ADRDL06	01	20DEC23	SEGMENT 1A - DRAINAGE PLAN - STA 841+00 TO STA 851+00
	1ADRPR06	00	16NOV22	SEGMENT 1A - DRAINAGE PROFILES - STA 841+00 TO STA 851+00
	1ADRPR06A	00	16NOV22	SEGMENT 1A - DRAINAGE PROFILES - STA 841+00 TO STA 851+00
	1ADRDL07	00	16NOV22	SEGMENT 1A - DRAINAGE PLAN - STA 851+00 TO STA 861+00
	1ADRPR07	01	11APR23	SEGMENT 1A - DRAINAGE PROFILES - STA 851+00 TO STA 861+00

RELEASED FOR CONSTRUCTION 2024.01.25 14:40:59 -06'00'

STATE OF TEXAS
JEREMY HUTCHINS
134720
LICENSED PROFESSIONAL ENGINEER

2024.01.25 14:39:24 -06'00'

ISSUE RECORD

NO.	DESCRIPTION	DATE
03	NDC 0075	10JUL23
04	NDC 0099	04AUG23
05	NDC 0123	27OCT23
06	NDC 0133	20DEC23
07	NDC 0142	05JAN24

CENTRAL TEXAS REGIONAL MOBILITY AUTHORITY

GREAT HILLS CONSTRUCTORS

PARSONS
TBPE Registration No. F-1481

183 NORTH MOBILITY
SEGMENT 1A
DRAINAGE INDEX
SHEET 1 OF 2

DESIGNED	FED. RD. DIV. NO.		FEDERAL AID PROJECT NO.	HIGHWAY NO.
MD	6			US 183
DRAWN	STATE	DISTRICT	COUNTY	DRAWING
RG	TEXAS	AUSTIN	TRAVIS, WILLIAMSON	1ADRIN01
CHECKED	CONTROL	SECTION	JOB	SHEET NO.
MM				
APPROVED	0151	06	143	1ADR002
CB				

User: p003330E Date: 1/25/2024 Time: 2:25:27 PM Pen Table: 183N_Standard.tbl Plot Config: 183N PDF.pltcfg
File Name: 1A-RDIN-01.dgn

INCLUDED	SHEET	REV	DATE	DESCRIPTION
				PROPOSED DRAINAGE PLANS (CONTINUED)
X	1ADRDL08	02	05JAN24	SEGMENT 1A - DRAINAGE PLAN - STA 861+00 TO STA 871+00
	1ADRPR08	00	16NOV22	SEGMENT 1A - DRAINAGE PROFILES - STA 861+00 TO STA 871+00
	1ADRPR08A	02	04AUG23	SEGMENT 1A - DRAINAGE PROFILES - STA 861+00 TO STA 871+00
X	1ADRPR08B	02	05JAN24	SEGMENT 1A - DRAINAGE PROFILES - STA 861+00 TO STA 871+00
X	1ADRDL09	04	05JAN24	SEGMENT 1A - DRAINAGE PLAN - STA 871+00 TO STA 881+00
X	1ADRPR09	03	05JAN24	SEGMENT 1A - DRAINAGE PROFILES - STA 871+00 TO STA 881+00
	1ADRPR09A	00	16NOV22	SEGMENT 1A - DRAINAGE PROFILES - STA 871+00 TO STA 881+00
	1ADRDL10	03	27OCT23	SEGMENT 1A - DRAINAGE PLAN - STA 881+00 TO STA 891+00 - SHEET 1 OF 2
	1ADRDL10A	03	27OCT23	SEGMENT 1A - DRAINAGE PLAN - STA 881+00 TO STA 891+00 - SHEET 2 OF 2
	1ADRPR10	02	04AUG23	SEGMENT 1A - DRAINAGE PROFILES - STA 881+00 TO STA 891+00
	1ADRPR10A	01	10JUL23	SEGMENT 1A - DRAINAGE PROFILES - STA 881+00 TO STA 891+00
	1ADRPR10B	03	27OCT23	SEGMENT 1A - DRAINAGE PROFILES - STA 881+00 TO STA 891+00
	1ADRPR10C	01	11APR23	SEGMENT 1A - DRAINAGE PROFILES - STA 881+00 TO STA 891+00
	1ADRPR10D	02	27OCT23	SEGMENT 1A - DRAINAGE PROFILES - STA 881+00 TO STA 891+00
	1ADRDL11	02	27OCT23	SEGMENT 1A - DRAINAGE PLAN - STA 891+00 TO STA 901+00
	1ADRPR11	03	04AUG23	SEGMENT 1A - DRAINAGE PROFILES - STA 891+00 TO STA 901+00
	1ADRPR11A	03	27OCT23	SEGMENT 1A - DRAINAGE PROFILES - STA 891+00 TO STA 901+00
	1ADRPR11B	02	10JUL23	SEGMENT 1A - DRAINAGE PROFILES - STA 891+00 TO STA 901+00
	1ADRPR11C	03	04AUG23	SEGMENT 1A - DRAINAGE PROFILES - STA 891+00 TO STA 901+00
	1ADRDL12	01	27OCT23	SEGMENT 1A - DRAINAGE PLAN - STA 901+00 TO STA 911+00
	1ADRPR12	02	27OCT23	SEGMENT 1A - DRAINAGE PROFILES - STA 901+00 TO STA 911+00
	1ADRPR12A	01	27OCT23	SEGMENT 1A - DRAINAGE PROFILES - STA 901+00 TO STA 911+00
	1ADRDL13	02	04AUG23	SEGMENT 1A - DRAINAGE PLAN - STA 911+00 TO STA 921+00
	1ADRPR13	02	10JUL23	SEGMENT 1A - DRAINAGE PROFILES - STA 911+00 TO STA 921+00
	1ADRPR13A	01	11APR23	SEGMENT 1A - DRAINAGE PROFILES - STA 911+00 TO STA 921+00
	1ADRDL14	02	19MAY23	SEGMENT 1A - DRAINAGE PLAN - STA 921+00 TO STA 931+00
	1ADRPR14	02	19MAY23	SEGMENT 1A - DRAINAGE PROFILES - STA 921+00 TO STA 931+00
	1ADRPR14A	02	11APR23	SEGMENT 1A - DRAINAGE PROFILES - STA 921+00 TO STA 931+00
	1ADRDL15	02	04AUG23	SEGMENT 1A - DRAINAGE PLAN - STA 931+00 TO STA 941+00
	1ADRPR15	03	04AUG23	SEGMENT 1A - DRAINAGE PROFILES - STA 931+00 TO STA 941+00
	1ADRPR15A	01	11APR23	SEGMENT 1A - DRAINAGE PROFILES - STA 931+00 TO STA 941+00
	1ADRPR15B	02	04AUG23	SEGMENT 1A - DRAINAGE PROFILES - STA 931+00 TO STA 941+00
	1ADRDL16	02	04AUG23	SEGMENT 1A - DRAINAGE PLAN - STA 941+00 TO STA 949+00 - SHEET 1 OF 2
	1ADRDL16A	02	04AUG23	SEGMENT 1A - DRAINAGE PLAN - STA 941+00 TO STA 949+00 - SHEET 2 OF 2
	1ADRPR16	02	04AUG23	SEGMENT 1A - DRAINAGE PROFILES - STA 941+00 TO STA 949+00
	1ADRPR16A	01	11APR23	SEGMENT 1A - DRAINAGE PROFILES - STA 941+00 TO STA 949+00
	1ADRPR16B	02	04AUG23	SEGMENT 1A - DRAINAGE PROFILES - STA 941+00 TO STA 949+00
	1ADRDL17	00	16NOV22	SEGMENT 1A - DRAINAGE PLAN - STA 949+00 TO STA 955+95
	1ADRPR17	00	16NOV22	SEGMENT 1A - DRAINAGE PROFILES - STA 949+00 TO STA 955+95
	1ADRDT02	00	10JUL23	CURB INLET DETAILS TYPE IIR FOR 18" PIPE

				CULVERT PLANS
	1ADRPP01	01	20DEC23	SEGMENT 1A - CULVERT PLAN & PROFILE - CULVERT 839+00
	TDD	00	16NOV22	TRENCH DRAIN DETAILS - SHEET 1 OF 2
	TDD	00	16NOV22	TRENCH DRAIN DETAILS - SHEET 2 OF 2
	IL-A (SPL) TDC	00	16NOV22	TYPE A SPL INLET - TRENCH DRAIN CONNECTION
	1ADRDT01	00	16NOV22	SEGMENT 1A - TRENCH DRAIN REINFORCEMENT DETAIL

RELEASED FOR CONSTRUCTION 2024.01.25 14:41:20 -06'00'

STATE OF TEXAS
JEREMY HUTCHINS
134720
LICENSED PROFESSIONAL ENGINEER

2024.01.25 14:39:46 -06'00'

ISSUE RECORD

NO.	DESCRIPTION	DATE
03	NDC 0075	10JUL23
04	NDC 0099	04AUG23
05	NDC 0123	27OCT23
06	NDC 0133	20DEC23
07	NDC 0142	05JAN24

CENTRAL TEXAS REGIONAL MOBILITY AUTHORITY

GREAT HILLS CONSTRUCTORS

PARSONS
TBPE Registration No. F-1481

183 NORTH MOBILITY
SEGMENT 1A
DRAINAGE INDEX
SHEET 2 OF 2

DESIGNED	FED. RD. DIV. NO.		FEDERAL AID PROJECT NO.	HIGHWAY NO.
MD	6			US 183
DRAWN RG	STATE	DISTRICT	COUNTY	DRAWING
CHECKED JH	TEXAS	AUSTIN	TRAVIS, WILLIAMSON	1ADRIN02
APPROVED PG	CONTROL	SECTION	JOB	SHEET NO.
	0151	06	143	1ADR003

User: p003330E Date: 1/25/2024 Time: 2:25:35 PM Pen Table: 183N_Standard.tbl Plot Config: 183N PDF.pltcfg
File Name: 1A-RDIN-02.dgn



HORIZONTAL SCALE
0' 200' 400'

LEGEND

- PROPOSED DRAINAGE AREA
- EXISTING DRAINAGE AREA
- 25 EXISTING CONTOUR
- FLOW DIRECTION
- PROPOSED DRAINAGE
- EXISTING DRAINAGE
- EXIST DRAINAGE TO BE REMOVED
- EXIST DRAINAGE TO BE ABANDONED
- DRAINAGE DITCH
- CONSTRUCTION EASEMENT

RELEASED FOR CONSTRUCTION 2024.01.25 14:41:28 -06'00'

STATE OF TEXAS
JEREMY HUTCHINS
134720
LICENSED PROFESSIONAL ENGINEER

2024.01.25 14:39:53 -06'00'

ISSUE RECORD

NO.	DESCRIPTION	DATE
00	RFC DESIGN	16NOV22
01	NDC 0133	20DEC23

CENTRAL TEXAS REGIONAL MOBILITY AUTHORITY

GREAT HILLS CONSTRUCTORS

PARSONS
TBPE Registration No. F-1481

183 NORTH MOBILITY
SEGMENT 1A
PROPOSED DRAINAGE AREA PLAN
OFFSITE DRAINAGE AREAS

DESIGNED	FED. RD. DIV. NO.		FEDERAL AID PROJECT NO.	HIGHWAY NO.
MD	6			US 183
DRAWN	STATE	DISTRICT	COUNTY	DRAWING
RG	TEXAS	AUSTIN	TRAVIS, WILLIAMSON	1ADREDM01
CHECKED	CONTROL	SECTION	JOB	SHEET NO.
MM	0151	06	143	1ADR008
APPROVED				
CB				

User: p003330E Date: 1/25/2024 Time: 2:26:16 PM Pen Table: 183N_Standard.tbl Plot Config: 183N PDF.pltcfg
File Name: 1A-DREDM-01.dgn

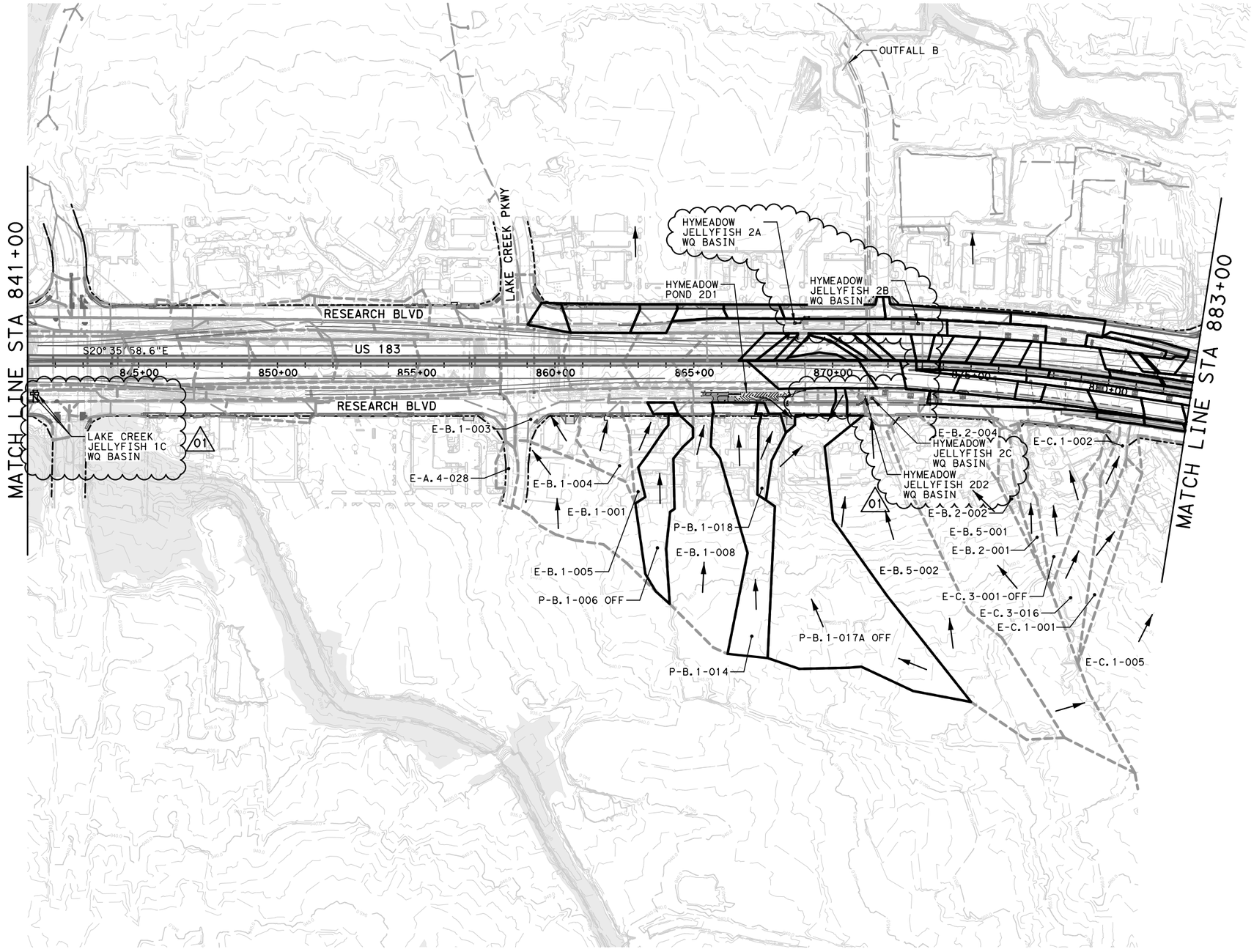

HORIZONTAL SCALE
0' 200' 400'

LEGEND

- PROPOSED DRAINAGE AREA
- EXISTING DRAINAGE AREA
- 25 EXISTING CONTOUR
- FLOW DIRECTION
- PROPOSED DRAINAGE
- EXISTING DRAINAGE
- EXIST DRAINAGE TO BE REMOVED
- EXIST DRAINAGE TO BE ABANDONED
- DRAINAGE DITCH
- CONSTRUCTION EASEMENT

RELEASED FOR CONSTRUCTION 2024.01.25 14:41:31 -06'00'

STATE OF TEXAS
JEREMY HUTCHINS
134720
LICENSED PROFESSIONAL ENGINEER

2024.01.25 14:39:57 -06'00'

ISSUE RECORD		
NO.	DESCRIPTION	DATE
00	RFC DESIGN	16NOV22
01	NDC 0133	20DEC23

CENTRAL TEXAS REGIONAL MOBILITY AUTHORITY

GREAT HILLS CONSTRUCTORS

PARSONS
TBPE Registration No. F-1481

183 NORTH MOBILITY
SEGMENT 1A
PROPOSED DRAINAGE AREA PLAN
OFFSITE DRAINAGE AREAS

DESIGNED	FED. RD. DIV. NO.		FEDERAL AID PROJECT NO.	HIGHWAY NO.
MD	6			US 183
DRAWN	STATE	DISTRICT	COUNTY	DRAWING
RG	TEXAS	AUSTIN	TRAVIS, WILLIAMSON	1ADREDM02
CHECKED	CONTROL	SECTION	JOB	SHEET NO.
MM	0151	06	143	1ADR009
APPROVED				
CB				

User: p003330E Date: 1/25/2024 Time: 2:26:35 PM Pen Table: 183N_Standard.tbl Plot Config: 183N PDF.pltcfg
File Name: 1A-DREDM-02.dgn

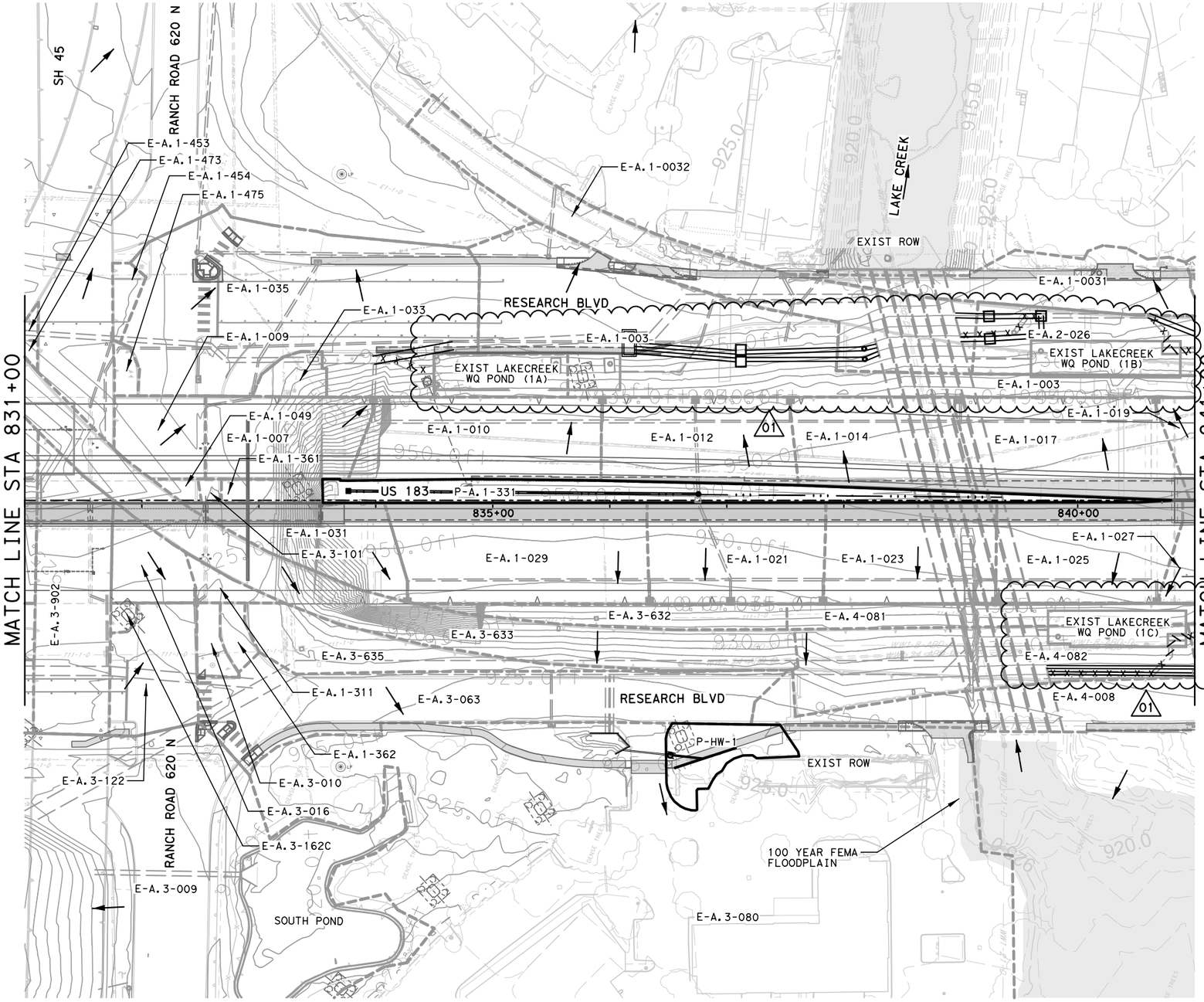

HORIZONTAL SCALE
0' 50' 100'

LEGEND

- PROPOSED DRAINAGE AREA
- EXISTING DRAINAGE AREA
- 25 EXISTING CONTOUR
- FLOW DIRECTION
- PROPOSED DRAINAGE
- EXISTING DRAINAGE
- EXIST DRAINAGE TO BE REMOVED
- EXIST DRAINAGE TO BE ABANDONED
- DRAINAGE DITCH
- CONSTRUCTION EASEMENT

RELEASED FOR CONSTRUCTION 2024.01.25 14:41:34 -06'00'

STATE OF TEXAS
JEREMY HUTCHINS
134720
LICENSED PROFESSIONAL ENGINEER

2024.01.25 14:40:00 -06'00'

ISSUE RECORD

NO.	DESCRIPTION	DATE
00	RFC DESIGN	16NOV22
01	NDC 0133	20DEC23

CENTRAL TEXAS REGIONAL MOBILITY AUTHORITY

GREAT HILLS CONSTRUCTORS

PARSONS
TBPE Registration No. F-1481

183 NORTH MOBILITY
SEGMENT 1A
PROPOSED DRAINAGE AREA PLAN
STA 831+00 TO STA 841+00

DESIGNED	FED. RD. DIV. NO.		FEDERAL AID PROJECT NO.	HIGHWAY NO.
MD	6			US 183
DRAWN RG	STATE	DISTRICT	COUNTY	DRAWING
CHECKED MM	TEXAS	AUSTIN	TRAVIS, WILLIAMSON	1ADRDM05
APPROVED	CONTROL	SECTION	JOB	SHEET NO.
CB	0151	06	143	1ADR017

User: p003330E Date: 1/25/2024 Time: 2:27:00 PM Pen Table: 183N_Standard.tbl Plot Config: 183N PDF.pltcfg
File Name: 1A-DRDM-05.dgn

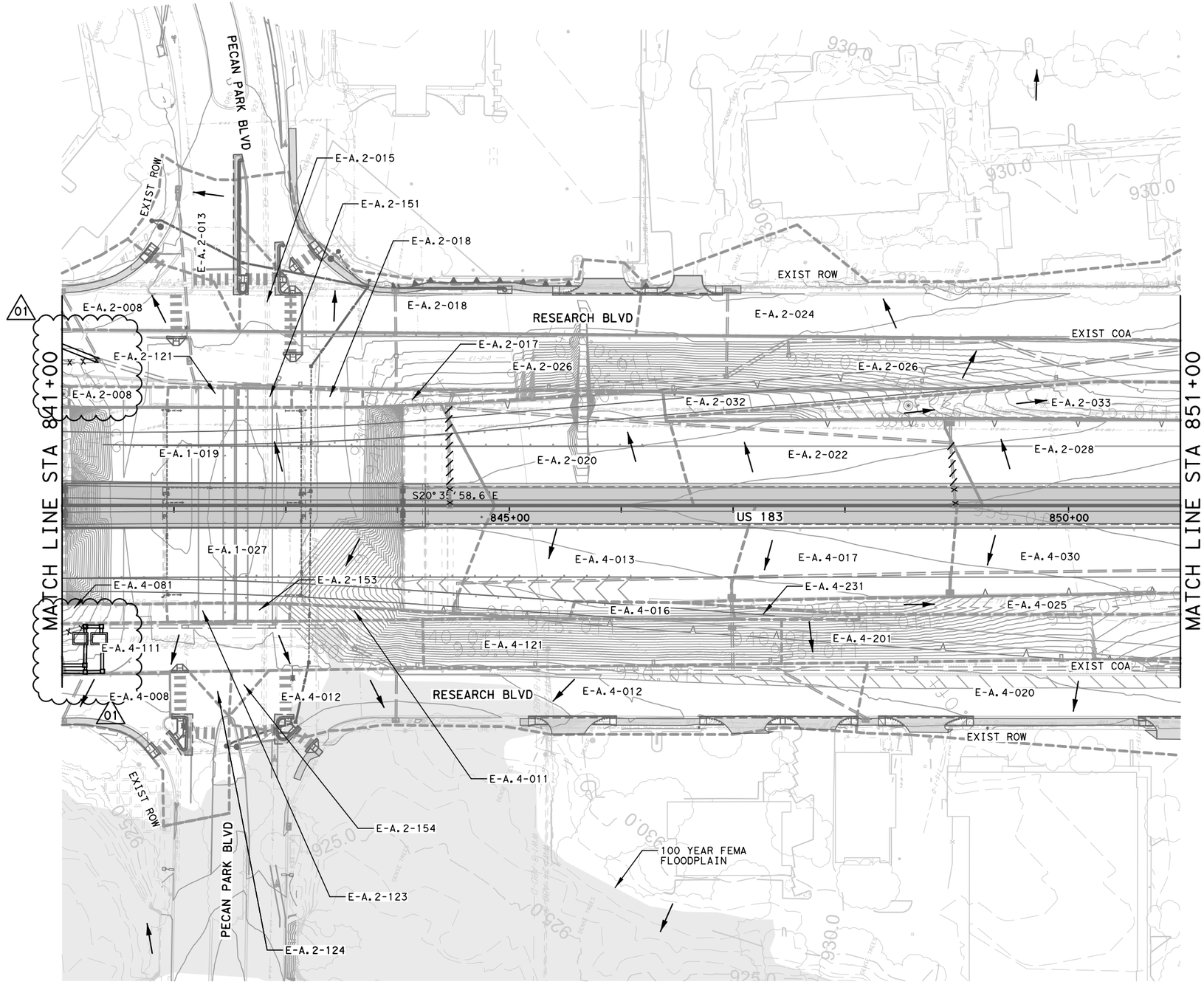

HORIZONTAL SCALE
0' 50' 100'

LEGEND

- PROPOSED DRAINAGE AREA
- EXISTING DRAINAGE AREA
- 25 EXISTING CONTOUR
- FLOW DIRECTION
- PROPOSED DRAINAGE
- EXISTING DRAINAGE
- EXIST DRAINAGE TO BE REMOVED
- EXIST DRAINAGE TO BE ABANDONED
- DRAINAGE DITCH
- CONSTRUCTION EASEMENT

RELEASED FOR CONSTRUCTION 2024.01.25 14:41:35 -06'00'

STATE OF TEXAS
JEREMY HUTCHINS
134720
LICENSED PROFESSIONAL ENGINEER

2024.01.25 14:40:02 -06'00'

ISSUE RECORD

NO.	DESCRIPTION	DATE
00	RFC DESIGN	16NOV22
01	NDC 0133	20DEC23

CENTRAL TEXAS REGIONAL MOBILITY AUTHORITY

GREAT HILLS CONSTRUCTORS

PARSONS
TBPE Registration No. F-1481

183 NORTH MOBILITY
SEGMENT 1A
PROPOSED DRAINAGE AREA PLAN
STA 841+00 TO STA 851+00

DESIGNED	FED. RD. DIV. NO.		FEDERAL AID PROJECT NO.	HIGHWAY NO.
MD	6			US 183
DRAWN	STATE	DISTRICT	COUNTY	DRAWING
RG	TEXAS	AUSTIN	TRAVIS, WILLIAMSON	1ADRDM06
CHECKED	CONTROL	SECTION	JOB	SHEET NO.
MM	0151	06	143	1ADR018
APPROVED				
CB				

User: p003330E Date: 1/25/2024 Time: 2:27:14 PM Pen Table: 183N_Standard.tbl Plot Config: 183N PDF.pltcfg
File Name: 1A-DRDM-06.dgn

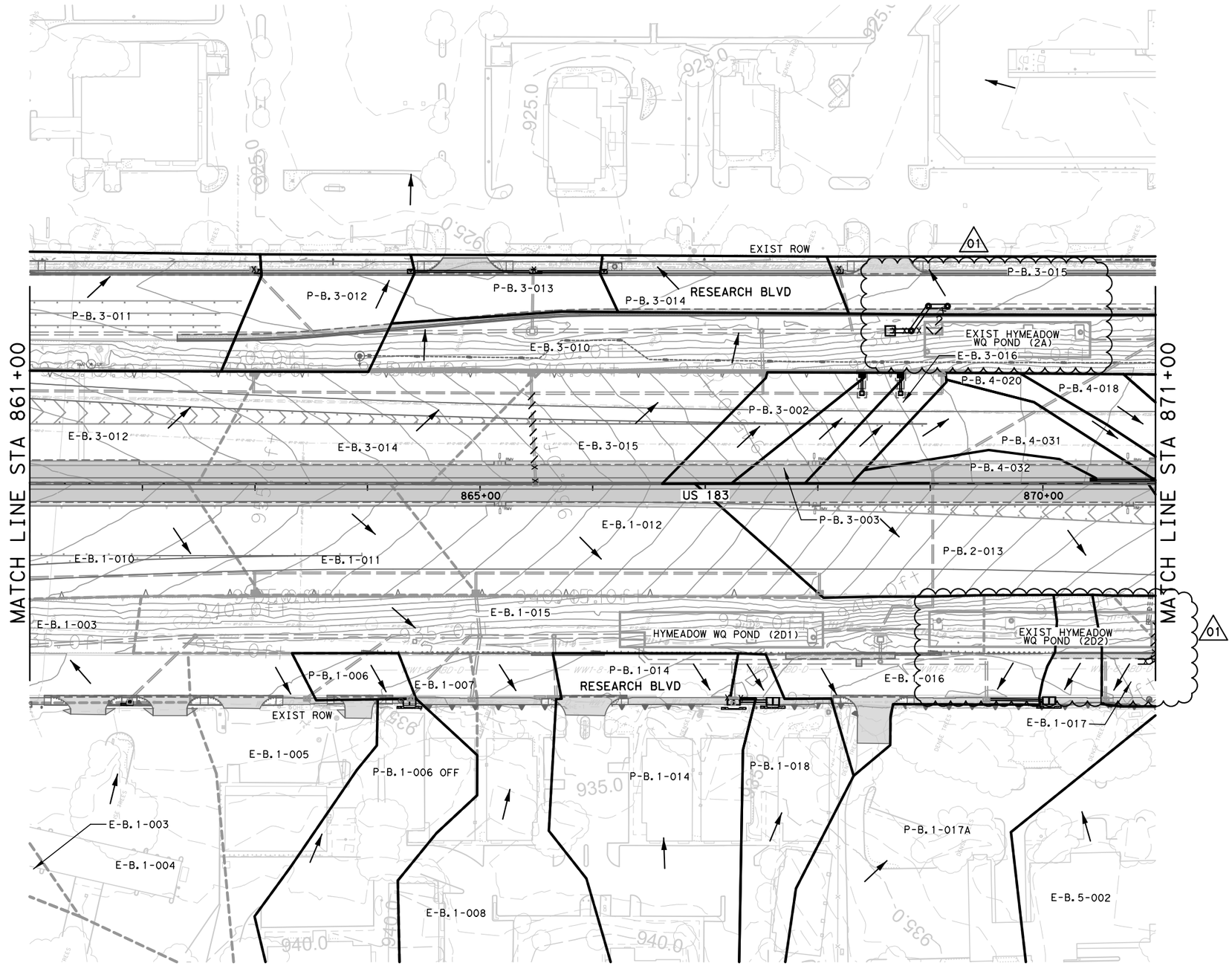

HORIZONTAL SCALE
0' 50' 100'

LEGEND

- PROPOSED DRAINAGE AREA
- EXISTING DRAINAGE AREA
- 25 EXISTING CONTOUR
- FLOW DIRECTION
- PROPOSED DRAINAGE
- EXISTING DRAINAGE
- EXIST DRAINAGE TO BE REMOVED
- EXIST DRAINAGE TO BE ABANDONED
- DRAINAGE DITCH
- CONSTRUCTION EASEMENT

RELEASED FOR CONSTRUCTION 2024.01.25 14:41:37 -06'00'

STATE OF TEXAS
JEREMY HUTCHINS
134720
LICENSED PROFESSIONAL ENGINEER

2024.01.25 14:40:03 -06'00'

ISSUE RECORD

NO.	DESCRIPTION	DATE
00	RFC DESIGN	16NOV22
01	NDC 0133	20DEC23

CENTRAL TEXAS REGIONAL MOBILITY AUTHORITY

GREAT HILLS CONSTRUCTORS

PARSONS
TBPE Registration No. F-1481

183 NORTH MOBILITY
SEGMENT 1A
PROPOSED DRAINAGE AREA PLAN
STA 861+00 TO STA 871+00

DESIGNED	FED. RD. DIV. NO.		FEDERAL AID PROJECT NO.	HIGHWAY NO.
MD	6			US 183
DRAWN RG	STATE	DISTRICT	COUNTY	DRAWING
CHECKED MM	TEXAS	AUSTIN	TRAVIS, WILLIAMSON	1ADRDM08
APPROVED CB	CONTROL	SECTION	JOB	SHEET NO.
	0151	06	143	1ADR020

User: p003330E Date: 1/25/2024 Time: 2:27:26 PM Pen Table: 183N_Standard.tbl Plot Config: 183N PDF.pltcfg
File Name: 1A-DRDM-08.dgn

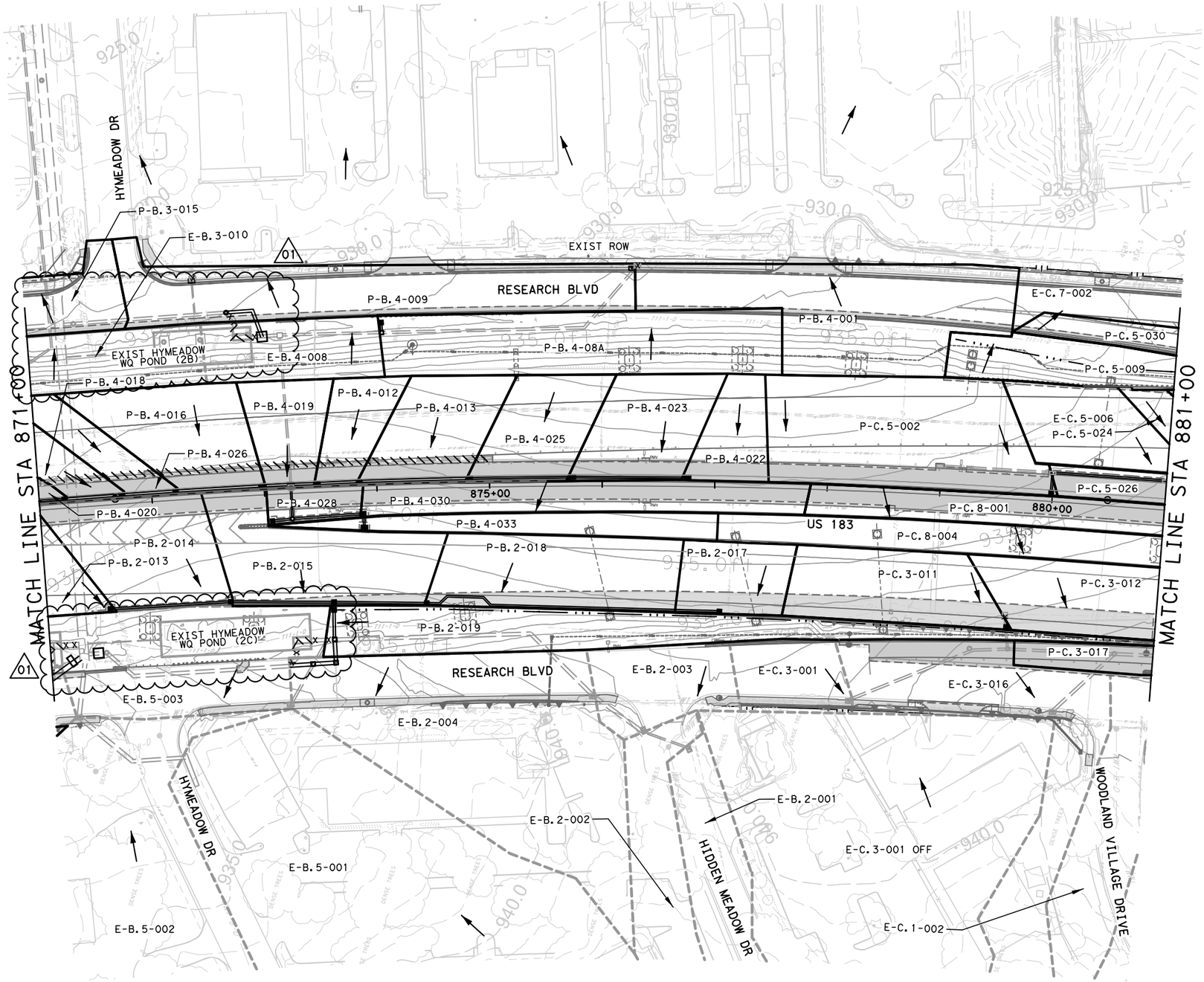

HORIZONTAL SCALE
0' 50' 100'

LEGEND

- PROPOSED DRAINAGE AREA
- EXISTING DRAINAGE AREA
- 25 EXISTING CONTOUR
- FLOW DIRECTION
- PROPOSED DRAINAGE
- EXISTING DRAINAGE
- EXIST DRAINAGE TO BE REMOVED
- EXIST DRAINAGE TO BE ABANDONED
- DRAINAGE DITCH
- CONSTRUCTION EASEMENT

RELEASED FOR CONSTRUCTION 2024.01.25 14:41:38 -06'00'

STATE OF TEXAS
JEREMY HUTCHINS
134720
LICENSED PROFESSIONAL ENGINEER

2024.01.25 14:40:04 -06'00'

ISSUE RECORD

NO.	DESCRIPTION	DATE
00	RFC DESIGN	16NOV22
01	NDC 0133	20DEC23

CENTRAL TEXAS REGIONAL MOBILITY AUTHORITY

GREAT HILLS CONSTRUCTORS

PARSONS
TBPE Registration No. F-1481

183 NORTH MOBILITY
SEGMENT 1A
PROPOSED DRAINAGE AREA PLAN
STA 871+00 TO STA 881+00

DESIGNED	FED. RD. DIV. NO.		FEDERAL AID PROJECT NO.	HIGHWAY NO.
MD	6			US 183
DRAWN	STATE	DISTRICT	COUNTY	DRAWING
RG	TEXAS	AUSTIN	TRAVIS, WILLIAMSON	1ADRDM09
CHECKED	CONTROL	SECTION	JOB	SHEET NO.
MM	0151	06	143	1ADR021
APPROVED				
CB				

User: p003330E Date: 1/25/2024 Time: 2:27:40 PM Pen Table: 183N_Standard.tbl Plot Config: 183N PDF.pltcfg
File Name: 1A-DRDM-09.dgn

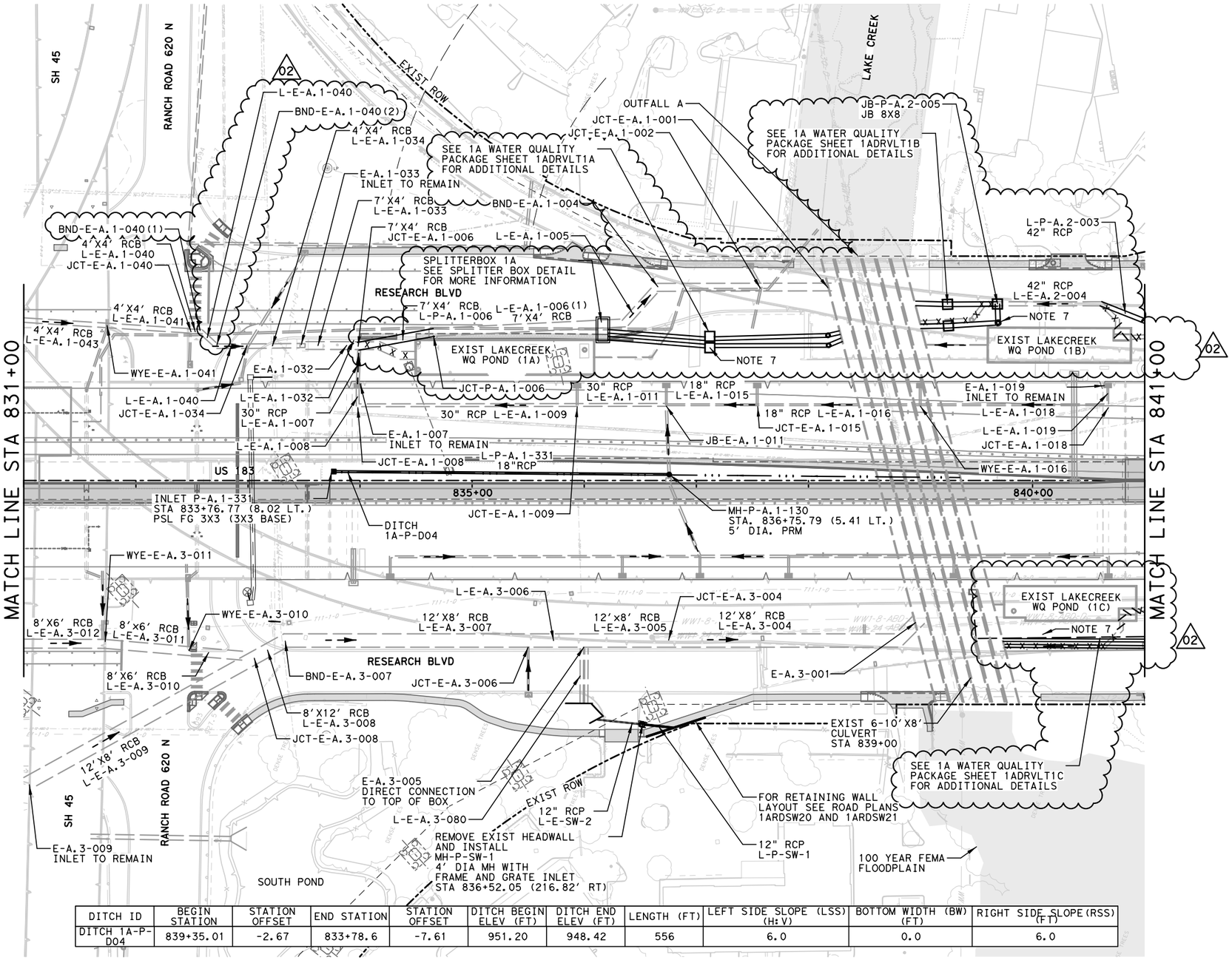

DITCH ID	BEGIN STATION	STATION OFFSET	END STATION	STATION OFFSET	DITCH BEGIN ELEV (FT)	DITCH END ELEV (FT)	LENGTH (FT)	LEFT SIDE SLOPE (LSS) (H:V)	BOTTOM WIDTH (BW) (FT)	RIGHT SIDE SLOPE(RSS) (FT)
DITCH 1A-P-D04	839+35.01	-2.67	833+78.6	-7.61	951.20	948.42	556	6.0	0.0	6.0

HORIZONTAL SCALE
0' 50' 100'

LEGEND

- PIPE FLOW DIRECTION
- PROPOSED DRAINAGE
- EXISTING DRAINAGE
- EXIST DRAINAGE TO BE REMOVED PER SPEC 496 REMOVING STRUCTURES
- EXIST DRAINAGE TO BE ABANDONED
- DRAINAGE DITCH
- PROPOSED PAVEMENT/SIDEWALK
- PROPOSED RETAINING WALL
- EXISTING RETAINING WALL
- ROW

NOTES:
1. ALL PIPES ARE 24" RCP UNLESS OTHERWISE NOTED.
2. FOR ALL CONNECTION TO EXIST STORM DRAINS, A CONCRETE COLLAR SHALL BE PROVIDED, UNLESS NOTED OTHERWISE. SEE CORRIDOR WIDE DRAINAGE DETAILS.
3. ALL OFFSETS ARE FROM US 183 CL, UNLESS NOTED OTHERWISE.
4. ALL DITCHES THIS SHEET REFERENCE ROADWAY GRADING/ CROSS SECTIONS FOR SIDE SLOPE INFORMATION.
5. All JUNCTION BOXES AT THE BASE OF RWRI INLETS SHALL BE 3X3 UNLESS OTHERWISE NOTED.

NOTES:
6. SEE ROADWAY PLANS AND CROSS SECTION SHEETS FOR DRIVEWAY GRADING DETAILS.
7. SEE WATER QUALITY PACKAGE SHEETS FOR PIPE RUNS FROM THE SPLITTER STRUCTURES TO THE JELLY FISH SYSTEM OUTFALLS.

RELEASED FOR CONSTRUCTION 2024.01.25 14:41:39 -06'00'

STATE OF TEXAS
JEREMY HUTCHINS
134720
LICENSED PROFESSIONAL ENGINEER

2024.01.25 14:40:05 -06'00'

ISSUE RECORD

NO.	DESCRIPTION	DATE
00	RFC DESIGN	16NOV22
01	NDC 0060	05MAY23
02	NDC 0133	20DEC23

CENTRAL TEXAS REGIONAL MOBILITY AUTHORITY

GREAT HILLS CONSTRUCTORS

PARSONS
TBPE Registration No. F-1481

183 NORTH MOBILITY
SEGMENT 1A
DRAINAGE PLAN
STA 831+00 TO STA 841+00
SHEET 1 OF 2

DESIGNED	FED. RD. DIV. NO.	FEDERAL AID PROJECT NO.	HIGHWAY NO.
MD	6		US 183
DRAWN	STATE	DISTRICT	COUNTY	DRAWING
RG	TEXAS	AUSTIN	TRAVIS, WILLIAMSON	1ADRDL05
CHECKED	CONTROL	SECTION	JOB	SHEET NO.
MM	0151	06	143	1ADR037
APPROVED				
CB				

User: p003330E Date: 1/25/2024 Time: 2:27:58 PM Pen Table: 183N_Standard.tbl Plot Config: 183N PDF.pltcfg
File Name: 1A-DRDL-05.dgn

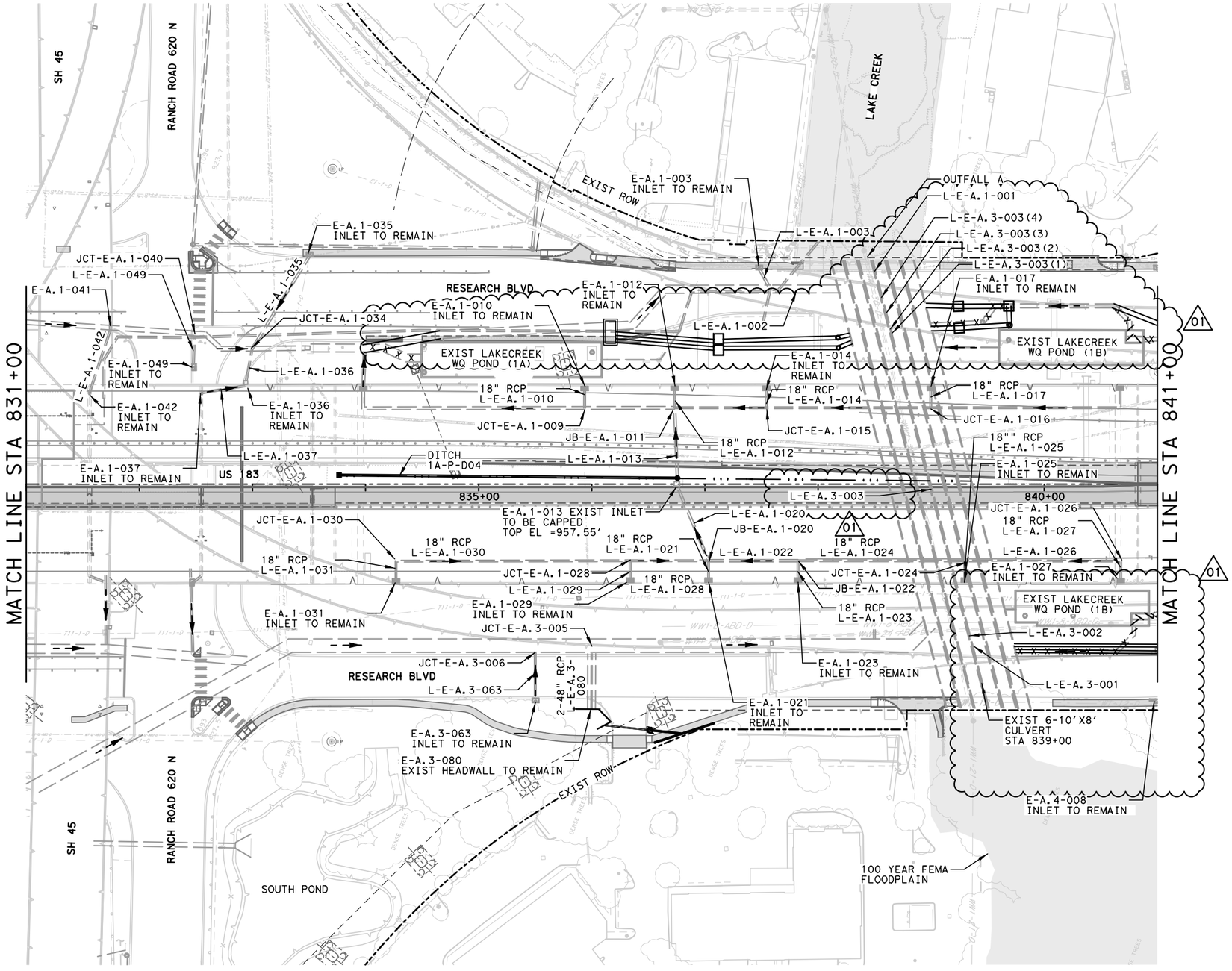

HORIZONTAL SCALE
0' 50' 100'

LEGEND

- PIPE FLOW DIRECTION
- PROPOSED DRAINAGE
- EXISTING DRAINAGE
- EXIST DRAINAGE TO BE REMOVED PER SPEC 496 REMOVING STRUCTURES
- EXIST DRAINAGE TO BE ABANDONED
- DRAINAGE DITCH
- PROPOSED PAVEMENT/SIDEWALK
- PROPOSED RETAINING WALL
- EXISTING RETAINING WALL
- ROW

NOTES:
1. ALL PIPES ARE 24" RCP UNLESS OTHERWISE NOTED.
2. FOR ALL CONNECTION TO EXIST STORM DRAINS, A CONCRETE COLLAR SHALL BE PROVIDED, UNLESS NOTED OTHERWISE. SEE CORRIDOR WIDE DRAINAGE DETAILS.
3. ALL OFFSETS ARE FROM US 183 CL, UNLESS NOTED OTHERWISE.
4. ALL DITCHES THIS SHEET REFERENCE ROADWAY GRADING/ CROSS SECTIONS FOR SIDE SLOPE INFORMATION.
5. All JUNCTION BOXES AT THE BASE OF RWRI INLETS SHALL BE 3X3 UNLESS OTHERWISE NOTED.

NOTES:
6. SEE ROADWAY PLANS AND CROSS SECTION SHEETS FOR DRIVEWAY GRADING DETAILS.
7. SEE WATER QUALITY PACKAGE SHEETS FOR PIPE RUNS FROM THE SPLITTER STRUCTURES TO THE JELLY FISH SYSTEM OUTFALLS.

RELEASED FOR CONSTRUCTION 2024.01.25 14:41:00 -06'00'

STATE OF TEXAS
JEREMY HUTCHINS
134720
LICENSED PROFESSIONAL ENGINEER

2024.01.25 14:39:25 -06'00'

ISSUE RECORD

NO.	DESCRIPTION	DATE
00	RFC DESIGN	16NOV22
01	NDC 0133	20DEC23

CENTRAL TEXAS REGIONAL MOBILITY AUTHORITY

GREAT HILLS CONSTRUCTORS

PARSONS
TBPE Registration No. F-1481

183 NORTH MOBILITY
SEGMENT 1A
DRAINAGE PLAN
STA 831+00 TO STA 841+00
SHEET 2 OF 2

DESIGNED	FED. RD. DIV. NO.	FEDERAL AID PROJECT NO.	HIGHWAY NO.
MD	6		US 183
DRAWN	STATE / DISTRICT	COUNTY	DRAWING
RG	TEXAS / AUSTIN	TRAVIS, WILLIAMSON	1ADRDL05A
CHECKED	CONTROL / SECTION	JOB	SHEET NO.
MM	0151 / 06	143	1ADR038
APPROVED			
CB			

User: p003330E Date: 1/25/2024 Time: 2:28:10 PM Pen Table: 183N_Standard.tbl Plot Config: 183N PDF.pltcfg
File Name: 1A-DRDL-05A.dgn

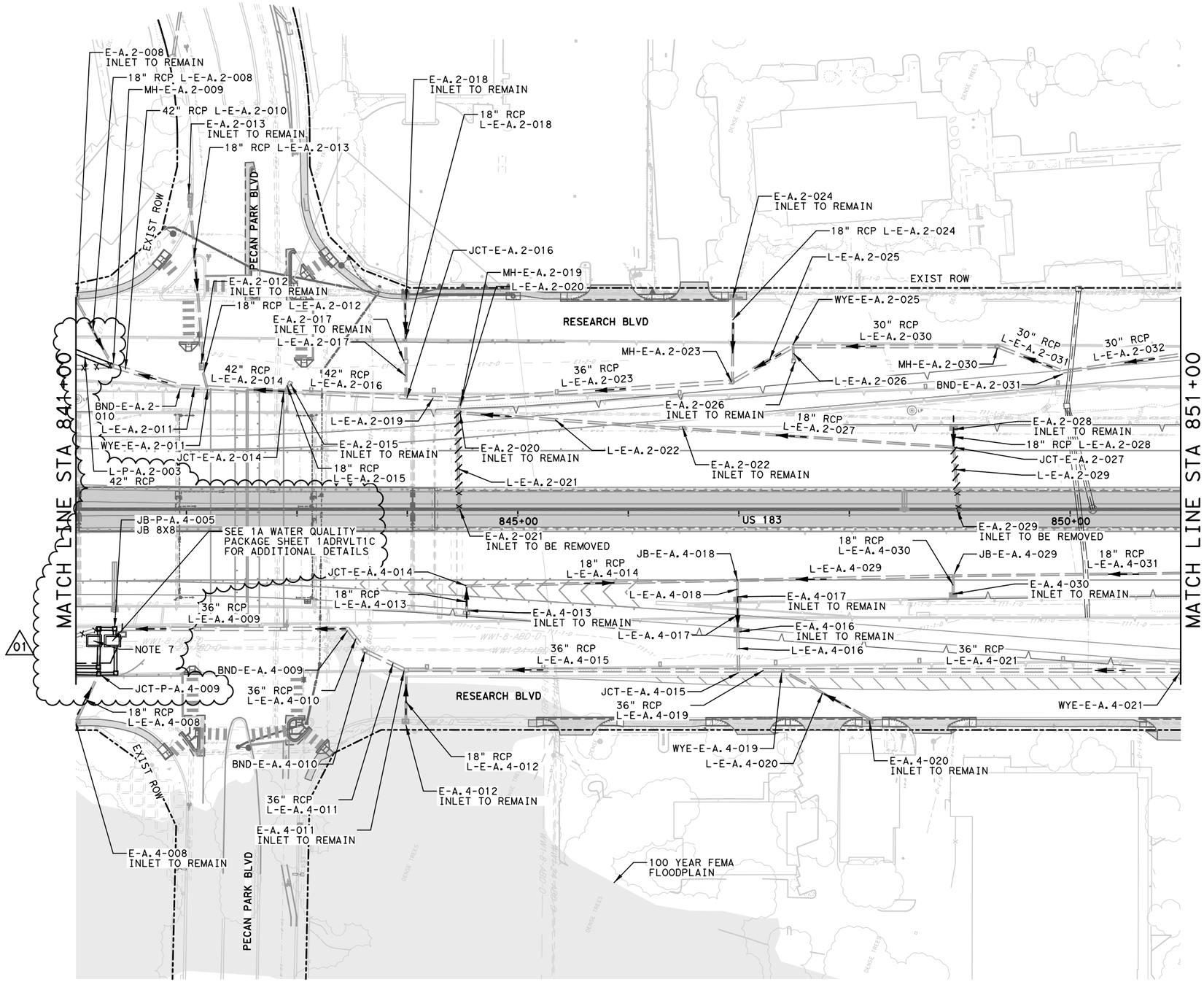

HORIZONTAL SCALE
0' 50' 100'

LEGEND

- PIPE FLOW DIRECTION
- PROPOSED DRAINAGE
- EXISTING DRAINAGE
- EXIST DRAINAGE TO BE REMOVED PER SPEC 496 REMOVING STRUCTURES
- EXIST DRAINAGE TO BE ABANDONED
- DRAINAGE DITCH
- PROPOSED PAVEMENT/SIDEWALK
- PROPOSED RETAINING WALL
- EXISTING RETAINING WALL
- ROW

NOTES:
1. ALL PIPES ARE 24" RCP UNLESS OTHERWISE NOTED.
2. FOR ALL CONNECTION TO EXIST STORM DRAINS, A CONCRETE COLLAR SHALL BE PROVIDED, UNLESS NOTED OTHERWISE. SEE CORRIDOR WIDE DRAINAGE DETAILS.
3. ALL OFFSETS ARE FROM US 183 CL, UNLESS NOTED OTHERWISE.
4. ALL DITCHES THIS SHEET REFERENCE ROADWAY GRADING/ CROSS SECTIONS FOR SIDE SLOPE INFORMATION.
5. All JUNCTION BOXES AT THE BASE OF RWRI INLETS SHALL BE 3X3 UNLESS OTHERWISE NOTED.

NOTES:
6. SEE ROADWAY PLANS AND CROSS SECTION SHEETS FOR DRIVEWAY GRADING DETAILS.

01 7. SEE WATER QUALITY PACKAGE SHEETS FOR PIPE RUNS FROM THE SPLITTER STRUCTURES TO THE JELLY FISH SYSTEM OUTFALLS.

RELEASED FOR CONSTRUCTION 2024.01.25 14:41:01 -06'00'

STATE OF TEXAS
JEREMY HUTCHINS
134720
LICENSED PROFESSIONAL ENGINEER

2024.01.25 14:39:27 -06'00'

ISSUE RECORD

NO.	DESCRIPTION	DATE
00	RFC DESIGN	16NOV22
01	NDC 0133	20DEC23

CENTRAL TEXAS REGIONAL MOBILITY AUTHORITY

GREAT HILLS CONSTRUCTORS

PARSONS
TBPE Registration No. F-1481

183 NORTH MOBILITY
SEGMENT 1A
DRAINAGE PLAN
STA 841+00 TO STA 851+00

DESIGNED	FED. RD. DIV. NO.	FEDERAL AID PROJECT NO.	HIGHWAY NO.
MD	6		US 183
DRAWN	STATE	DISTRICT	COUNTY	DRAWING
RG	TEXAS	AUSTIN	TRAVIS, WILLIAMSON	1ADRDL06
CHECKED	CONTROL	SECTION	JOB	SHEET NO.
MM	0151	06	143	1ADR041
APPROVED				
CB				

User: p003330E Date: 1/25/2024 Time: 2:29:24 PM Pen Table: 183N_Standard.tbl Plot Config: 183N PDF.pltcfg
File Name: 1A-DRDL-06.dgn

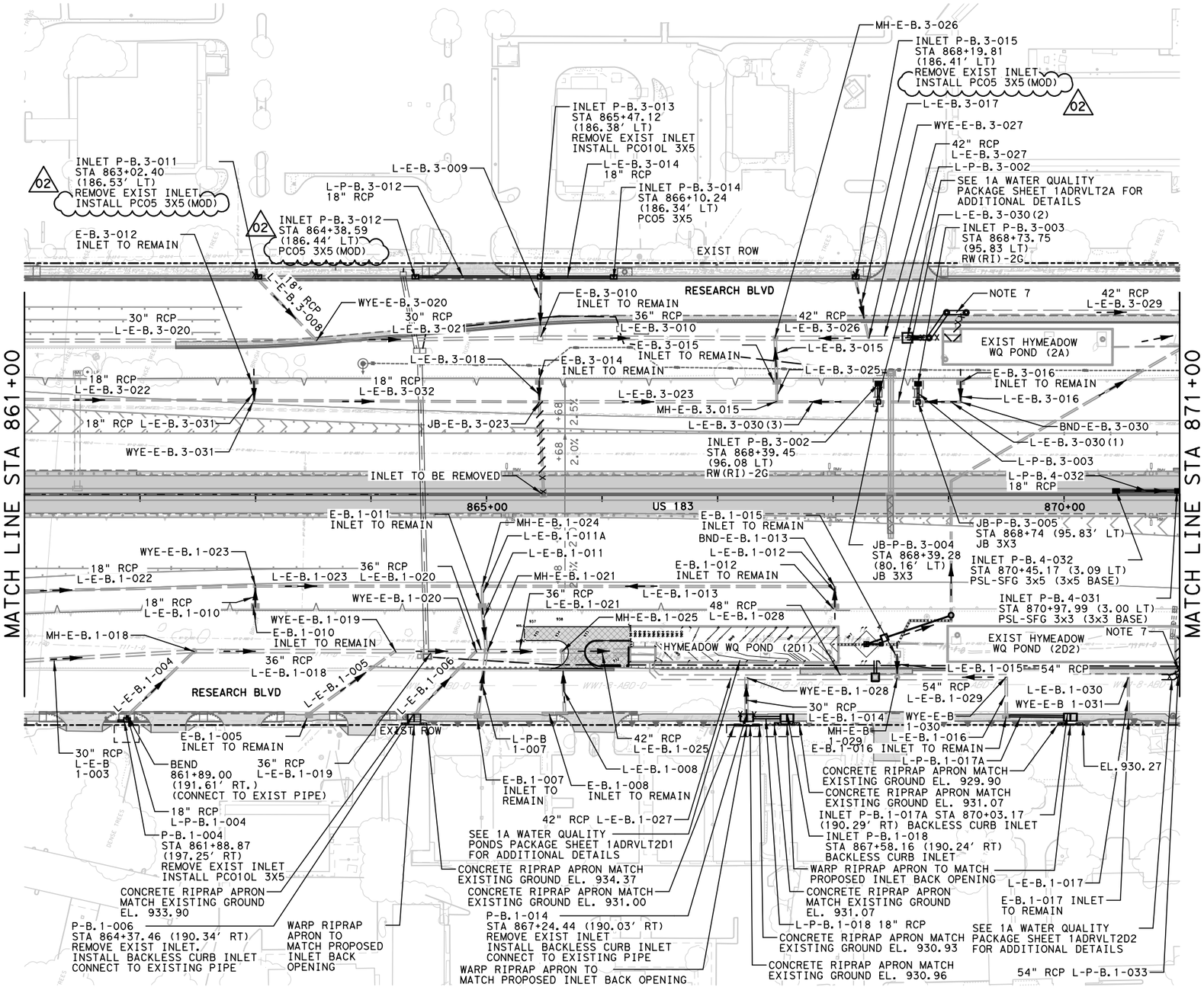

HORIZONTAL SCALE
0' 50' 100'

LEGEND

- PIPE FLOW DIRECTION
- PROPOSED DRAINAGE
- EXISTING DRAINAGE
- EXIST DRAINAGE TO BE REMOVED PER SPEC 496 REMOVING STRUCTURES
- EXIST DRAINAGE TO BE ABANDONED
- DRAINAGE DITCH
- PROPOSED PAVEMENT/SIDEWALK
- PROPOSED RETAINING WALL
- EXISTING RETAINING WALL
- ROW

NOTES:
1. ALL PIPES ARE 24" RCP UNLESS OTHERWISE NOTED.
2. FOR ALL CONNECTION TO EXIST STORM DRAINS, A CONCRETE COLLAR SHALL BE PROVIDED, UNLESS NOTED OTHERWISE. SEE CORRIDOR WIDE DRAINAGE DETAILS.
3. ALL OFFSETS ARE FROM US 183 CL, UNLESS NOTED OTHERWISE.
4. ALL DITCHES THIS SHEET REFERENCE ROADWAY GRADING/ CROSS SECTIONS FOR SIDE SLOPE INFORMATION.
5. All JUNCTION BOXES AT THE BASE OF RWRI INLETS SHALL BE 3X3 UNLESS OTHERWISE NOTED.

NOTES:
6. SEE ROADWAY PLANS AND CROSS SECTION SHEETS FOR DRIVEWAY GRADING DETAILS.
7. SEE WATER QUALITY PACKAGE SHEETS FOR PIPE RUNS FROM THE SPLITTER STRUCTURES TO THE JELLY FISH SYSTEM OUTFALLS.

RELEASED FOR CONSTRUCTION 2024.01.25 14:41:03 -06'00'

STATE OF TEXAS
JEREMY HUTCHINS
134720
LICENSED PROFESSIONAL ENGINEER

2024.01.25 14:39:29 -06'00'

ISSUE RECORD

NO.	DESCRIPTION	DATE
00	RFC DESIGN	16NOV22
01	NDC 0133	20DEC23
02	NDC 0142	05JAN24

CENTRAL TEXAS REGIONAL MOBILITY AUTHORITY

GREAT HILLS CONSTRUCTORS

PARSONS
TBPE Registration No. F-1481

183 NORTH MOBILITY
SEGMENT 1A
DRAINAGE PLAN
STA 861+00 TO STA 871+00

DESIGNED	FED. RD. DIV. NO.	FEDERAL AID PROJECT NO.	HIGHWAY NO.
MD	6		US 183
DRAWN	STATE	DISTRICT	COUNTY	DRAWING
RG	TEXAS	AUSTIN	TRAVIS, WILLIAMSON	1ADRDL08
CHECKED	CONTROL	SECTION	JOB	SHEET NO.
MM	0151	06	143	1ADR046
APPROVED				
CB				

User: p003330E Date: 1/25/2024 Time: 2:29:37 PM Pen Table: 183N_Standard.tbl Plot Config: 183N PDF.pltcfg
File Name: 1A-DRDL-08.dgn

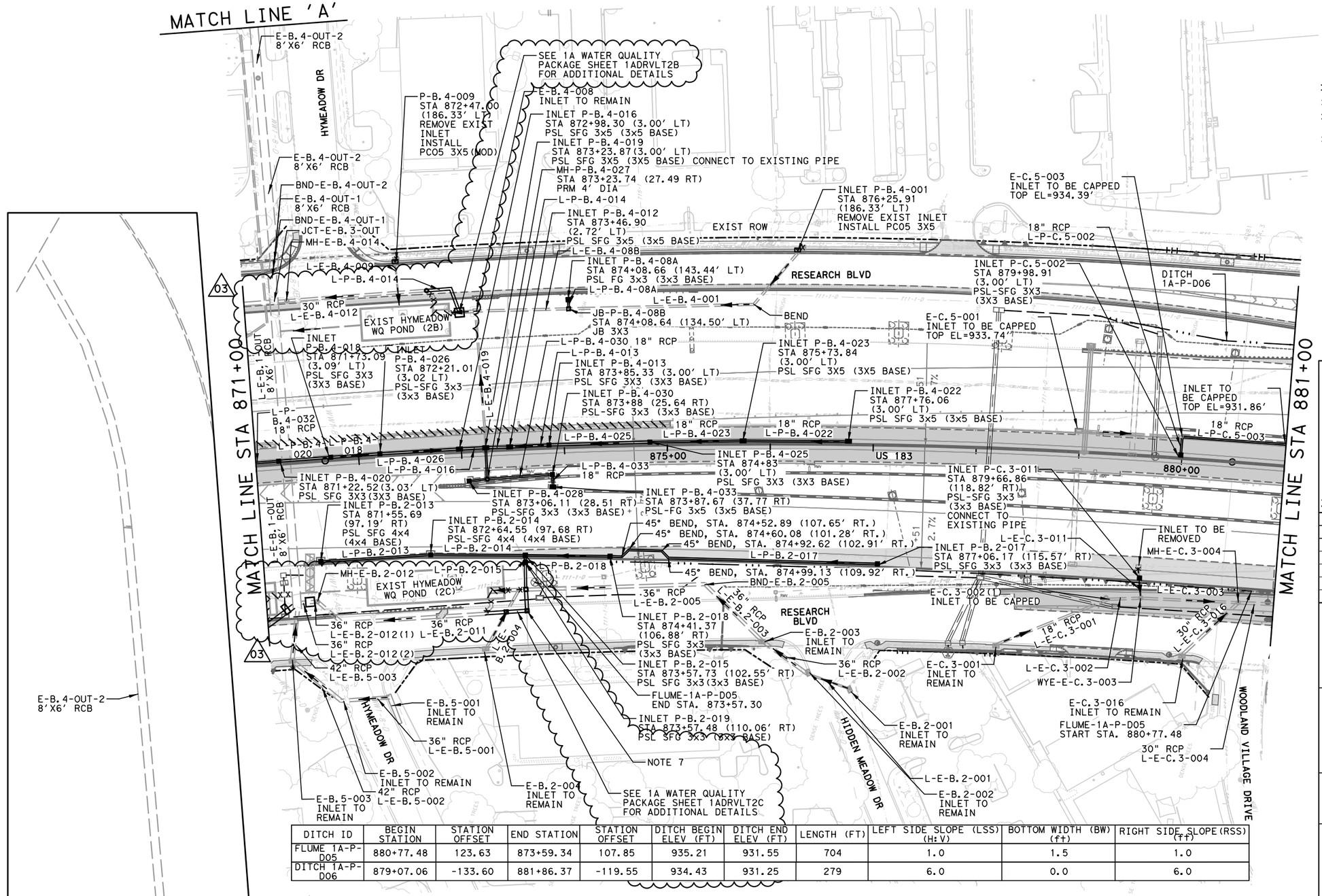

DITCH ID	BEGIN STATION	STATION OFFSET	END STATION	STATION OFFSET	DITCH BEGIN ELEV (FT)	DITCH END ELEV (FT)	LENGTH (FT)	LEFT SIDE SLOPE (LSS) (H:V)	BOTTOM WIDTH (BW) (ft)	RIGHT SIDE SLOPE(RSS) (ft)
FLUME 1A-P-D05	880+77.48	123.63	873+59.34	107.85	935.21	931.55	704	1.0	1.5	1.0
DITCH 1A-P-D06	879+07.06	-133.60	881+86.37	-119.55	934.43	931.25	279	6.0	0.0	6.0

LEGEND

- PIPE FLOW DIRECTION
- PROPOSED DRAINAGE
- EXISTING DRAINAGE
- EXIST DRAINAGE TO BE REMOVED PER SPEC 496 REMOVING STRUCTURES
- EXIST DRAINAGE TO BE ABANDONED
- DRAINAGE DITCH
- PROPOSED PAVEMENT/SIDEWALK
- PROPOSED RETAINING WALL
- EXISTING RETAINING WALL
- ROW

NOTES:
1. ALL PIPES ARE 24" RCP UNLESS OTHERWISE NOTED.
2. FOR ALL CONNECTION TO EXIST STORM DRAINS, A CONCRETE COLLAR SHALL BE PROVIDED, UNLESS NOTED OTHERWISE. SEE CORRIDOR WIDE DRAINAGE DETAILS.
3. ALL OFFSETS ARE FROM US 183 CL, UNLESS NOTED OTHERWISE.
4. ALL DITCHES THIS SHEET REFERENCE ROADWAY GRADING/ CROSS SECTIONS FOR SIDE SLOPE INFORMATION.
5. All JUNCTION BOXES AT THE BASE OF RWRI INLETS SHALL BE 3X3 UNLESS OTHERWISE NOTED.

NOTES:
6. SEE ROADWAY PLANS AND CROSS SECTION SHEETS FOR DRIVEWAY GRADING DETAILS.
7. SEE WATER QUALITY PACKAGE SHEETS FOR PIPE RUNS FROM THE SPLITTER STRUCTURES TO THE JELLY FISH SYSTEM OUTFALLS.

03

RELEASED FOR CONSTRUCTION 2024.01.25 14:41:05 -06'00'

STATE OF TEXAS
JEREMY HUTCHINS
134720
LICENSED PROFESSIONAL ENGINEER

2024.01.25 14:39:31 -06'00'

ISSUE RECORD

NO.	DESCRIPTION	DATE
00	RFC DESIGN	16NOV22
01	NDC0062	11APR23
02	NDC 0099	04AUG23
03	NDC 0133	20DEC23

CENTRAL TEXAS REGIONAL MOBILITY AUTHORITY

GREAT HILLS CONSTRUCTORS

PARSONS
TBPE Registration No. F-1481

183 NORTH MOBILITY
SEGMENT 1A
DRAINAGE PLAN
STA 871+00 TO STA 881+00

DESIGNED	FED. RD. DIV. NO.	FEDERAL AID PROJECT NO.		HIGHWAY NO.
MD	6			US 183
DRAWN	STATE	DISTRICT	COUNTY	DRAWING
RG	TEXAS	AUSTIN	TRAVIS, WILLIAMSON	1ADRDL09
CHECKED	CONTROL	SECTION	JOB	SHEET NO.
JM	0151	06	143	1ADR050
APPROVED				
CB				

User: p003330E Date: 1/25/2024 Time: 2:30:51 PM Pen Table: 183N_Standard.tbl Plot Config: 183N PDF.pltcfg
File Name: 1A-DRDL-09.dgn

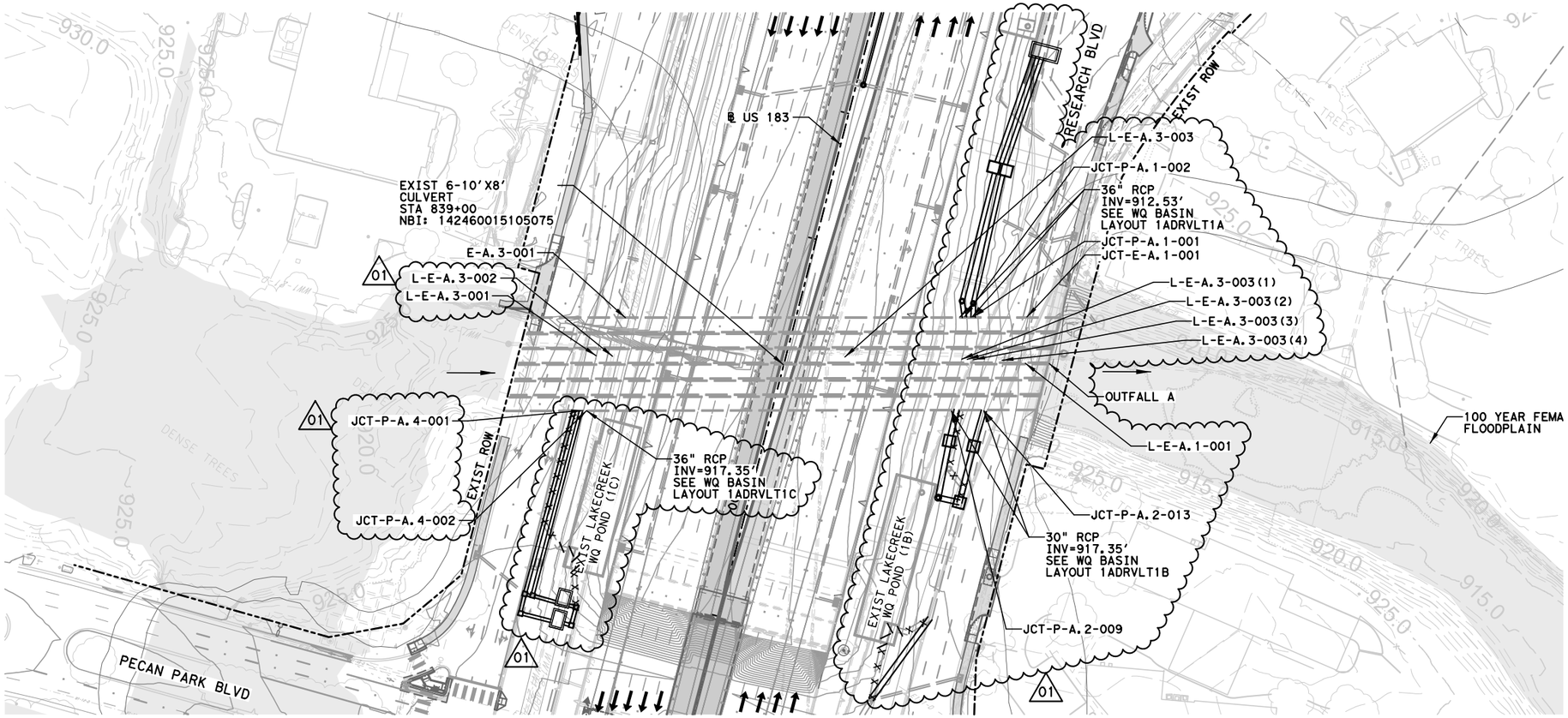

CULVERT 839+00 HYDRAULIC DATA			
10 YR	25YR	50YR	100YR
Q (cfs) = 3047.20	Q (cfs) = 4151.90	Q (cfs) = 5083.7	Q (cfs) = 6112.80
HW EL (ft) = 920.67	HW EL (ft) = 921.54	HW EL (ft) = 923.68	HW EL (ft) = 925.60
TW EL (ft) = 919.25	TW EL (ft) = 920.47	TW EL (ft) = 921.40	TW EL (ft) = 922.32
TW VEL (fps) = 5.79	TW VEL (fps) = 6.43	TW VEL (fps) = 6.89	TW VEL (fps) = 7.36

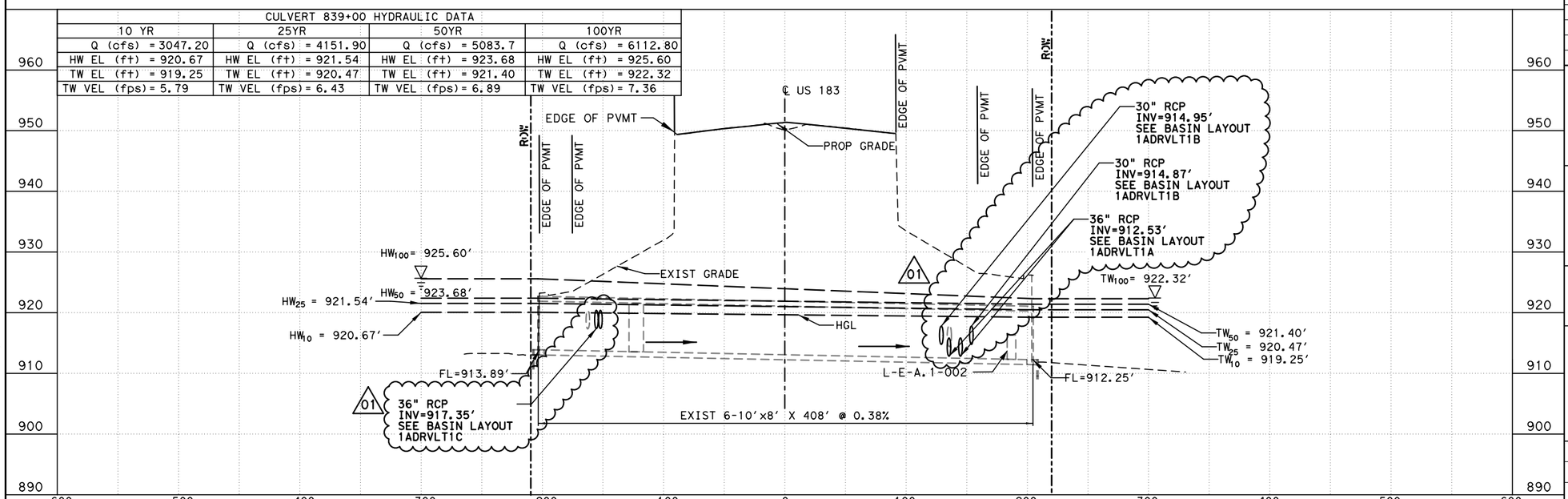

RELEASED FOR CONSTRUCTION 2024.01.25 14:41:07 -06'00'

STATE OF TEXAS
JEREMY HUTCHINS
134720
LICENSED PROFESSIONAL ENGINEER

2024.01.25 14:39:32 -06'00'

ISSUE RECORD

NO.	DESCRIPTION	DATE
00	RFC DESIGN	16NOV22
01	NDC 0133	20DEC23

CENTRAL TEXAS REGIONAL MOBILITY AUTHORITY

GREAT HILLS CONSTRUCTORS

PARSONS
TBPE Registration No. F-1481

183 NORTH MOBILITY
SEGMENT 1A
CULVERT PLAN & PROFILE
CULVERT 839+00

DESIGNED	FED. RD. DIV. NO.	FEDERAL AID PROJECT NO.	HIGHWAY NO.
MD	6		US 183
DRAWN	STATE / DISTRICT	COUNTY	DRAWING
RG	TEXAS / AUSTIN	TRAVIS, WILLIAMSON	1ADRPP01
CHECKED	CONTROL / SECTION	JOB	SHEET NO.
MM	0151 / 06	143	1ADR085
APPROVED			
CB			

User: p003330E Date: 1/25/2024 Time: 2:31:24 PM Pen Table: 183N_Standard.tbl Plot Config: 183N PDF.pltcfg
File Name: 1A-DRPP-01.dgn

INCLUDED	SHEET	REV	DATE	DESCRIPTION
				GENERAL SHEETS
	1AWQCO01	00	29MAR23	SEGMENT 1A - DRAINAGE WATER QUALITY PLANS - TITLE SHEET
X	1AWQIN01	02	20DEC23	SEGMENT 1A - DRAINAGE WATER QUALITY PLANS - INDEX
	1AWQIN02	00	29MAR23	DRAINAGE STANDARDS INDEX - SHEET 1 OF 3
	1AWQIN03	00	29MAR23	DRAINAGE STANDARDS INDEX - SHEET 2 OF 3
	1AWQIN04	00	29MAR23	DRAINAGE STANDARDS INDEX - SHEET 3 OF 3
X	1AWQGN01	01	20DEC23	SEGMENT 1A - DRAINAGE WATER QUALITY PLANS - GENERAL NOTES
X	1AWQGN02	01	20DEC23	SEGMENT 1A - DRAINAGE WATER QUALITY PLANS - KEY MAP
				POND LAYOUT PLANS
X	1ADRVLT1A	02	20DEC23	SEGMENT 1A - POND LAYOUT - LAKE CREEK POND 1A (BASIN A)
X	1AWQDT03	00	20DEC23	SEGMENT 1A - 1A SPLITTER BOX DETAILS - SHEET 1 OF 2
X	1AWQDT04	00	20DEC23	SEGMENT 1A - 1A SPLITTER BOX DETAILS - SHEET 2 OF 2
X	1ADRVLT1B	02	20DEC23	SEGMENT 1A - POND LAYOUT - LAKE CREEK POND 1B (BASIN A)
X	1ADRVLT1C	02	20DEC23	SEGMENT 1A - POND LAYOUT - LAKE CREEK POND 1C (BASIN A)
X	1ADRVLT2A	02	20DEC23	SEGMENT 1A - POND LAYOUT - HYMEADOW POND 2A (BASIN B)
X	1ADRVLT2B	02	20DEC23	SEGMENT 1A - POND LAYOUT - HYMEADOW POND 2B (BASIN B)
X	1ADRVLT2C	02	20DEC23	SEGMENT 1A - POND LAYOUT - HYMEADOW POND 2C (BASIN B)
X	1ADRVLT2D1	02	20DEC23	SEGMENT 1A - POND LAYOUT - HYMEADOW POND 2D1 (BASIN B)
X	1ADRVLT2D2	02	20DEC23	SEGMENT 1A - POND LAYOUT - HYMEADOW POND 2D2 (BASIN B)
	1ADRPONC	01	30JUN23	SEGMENT 1A - POND LAYOUT - POND SPRINGS (BASIN C)
	1AWQDT01	01	30JUN23	SEGMENT 1A - POND SPRINGS (BASIN C) - DETENTION POND DETAILS
	1AWQDT02	00	29MAR23	SEGMENT 1A - POND SPRINGS (BASIN C) - SPLITTER BOX STRUCTURE DETAILS
	1ADRPONDPL	00	29MAR23	SEGMENT 1A - POND LAYOUT - WOODS POND (BASIN D)
	1ADRPONDPR	00	29MAR23	SEGMENT 1A - POND SECTIONS - WOODS POND (BASIN D)
	1AWQDT-03	00	29MAR23	SEGMENT 1A - WOODS POND (BASIN D) - JUNCTION BOX STRUCTURAL DETAILS
	1AWQDT-04	00	29MAR23	SEGMENT 1A - WOODS POND (BASIN D) - HEADWALL DETAILS
	1AWQBCS01	00	29MAR23	SEGMENT 1A - BOX CULVERT SUPPLEMENT - WINGS & END TREATMENTS

RELEASED FOR CONSTRUCTION 2024.01.25 14:41:08 -06'00'

STATE OF TEXAS
JEREMY HUTCHINS
134720
LICENSED PROFESSIONAL ENGINEER

2024.01.25 14:39:33 -06'00'

ISSUE RECORD

NO.	DESCRIPTION	DATE
00	RFC DESIGN	29MAR23
01	NDC 0082	30JUN23
02	NDC 0133	20DEC23

CENTRAL TEXAS REGIONAL MOBILITY AUTHORITY

GREAT HILLS CONSTRUCTORS

PARSONS
TBPE Registration No. F-1481

183 NORTH MOBILITY
SEGMENT 1A
WATER QUALITY PLANS INDEX

DESIGNED	FED. RD. DIV. NO.		FEDERAL AID PROJECT NO.	HIGHWAY NO.
RG	6			US 183
DRAWN	STATE	DISTRICT	COUNTY	DRAWING
RG	TEXAS	AUSTIN	TRAVIS, WILLIAMSON	1AWQIN01
CHECKED	CONTROL	SECTION	JOB	SHEET NO.
MM	0151	06	143	1AWQ002
APPROVED				
SB				

User: p003330E Date: 1/25/2024 Time: 2:31:35 PM Pen Table: 183N_Standard.tbl Plot Config: 183N PDF.pltcfg
File Name: 1A-WQIN-01.dgn

WATER QUALITY BASINS 1A, 1B, 1C, 2A, 2B, 2C, and 2D2

1. THE CONTRACTOR IS TO SUBMIT SHOP DRAWINGS FOR ENGINEER APPROVAL FOR THE JELLYFISH FILTRATION SYSTEMS TO BE USED AT EACH BASIN.

2. THE JELLYFISH FILTRATION SYSTEMS ARE TO BE INSTALLED ALONG WITH SPLITTER STRUCTURES, INLET AND OUTLET PIPES PRIOR TO ABANDONING EXISTING VAULT SYSTEMS.

3. UPON INSTALLATION OF THE JELLYFISH FILTRATION SYSTEMS, POST CONSTRUCTION INSPECION IS REQUIRED IN ACCORDANCE WITH TCEQ RG-348 GUIDELINES PRIOR TO PUTTING THE JELLYFISH SYSTEM INTO SERVICE.

4. UPON PLACEMENT OF THE JELLYFISH FILTRATION SYSTEMS IN SERVICE, EXISTING INLET AND OUTLET PIPES TO THE VAULTS WILL BE REMOVED OR CAPPED AND ABANDON AS SHOWN IN THE PROJECT PLANS. THE VAULTS WILL BE DEWATERED THROUGH "ULTRA-DEWATERING BAGS" OR APPROVED EQUAL PER TxDOT SPECIAL SPECIFICATION 4091. DEWATERING BAGS TO BE SPECIFIED TO DETAIN BOTH OIL AND SEDIMENT/ SILT. IF FLOATABLE HAZARDOUS MATERIALS WERE FOUND PRIOR TO DEWATERING, DISPOSE OF THE BAG PROPERLY. THE EXISTING VAULTS WILL BE FILLED WITH SAND BACKFILL TO THE TOP OF THE EXISTING VAULT LIDS. THE VAULT LIDS WILL BE REMOVED TO A DEPTH OF 1 FT. BELOW THE EXISTING SURFACE AND THE OPENING CAPPED.

VAULT 2D1

1. REMOVE THE VAULT LID AND STRUCTURALLY STABILIZE VAULT WALLS.

2. REMOVE AND PROPERLY DISPOSE OF FLOATABLES FROM THE VAULT (IE PLASTIC BAGS AND BOTTLES).

3. VISUALLY INSPECT AND TEST STANDING WATER FOR OIL AND OTHER FLOATABLE HAZARDOUS MATERIALS.

4. DEWATER STANDING WATER IN THE VAULT TO A DEPTH OF 2IN ABOVE THE SEDIMENT ELEVATION. DEWATER THROUGH "ULTRA-DEWATERING BAGS" OR APPROVED EQUAL PER TxDOT SPECIAL SPECIFICATION 4091. DEWATERING BAGS TO BE SPECIFIED TO DETAIN BOTH OIL AND SEDIMENT/ SILT. IF FLOATABLE HAZARDOUS MATERIALS WERE FOUND PRIOR TO DEWATERING, DISPOSE OF THE BAG PROPERLY.

5. DEWATER CLEAN WATER INTO DOWNSTREAM SIDE OF FLOW SPLITTER BOX.

6. VISUALLY INSPECT AND TEST REMAINING SEDIMENT FOR HAZARDOUS MATERIALS. REMOVE SEDIMENT AND DISPOSE OF PROPERLY UPON CONCLUSION OF TESTING.

7. TEMPORALLY PLUG AND WATER SEAL THE OUTLET PIPE FROM THE VAULT.

8. MAINTAIN OPERATION OF SEDIMENT CONTROL IN VAULT DURING CONSTRUCTION. DURING AND AFTER STORM EVENTS DEWATER THE VAULT THROUGH THE USE OF DEWATER BAGS. DISCHARGE CLEAN WATER ON THE DOWNSTREAM SIDE OF THE FLOW DIVERSION STRUCTURE. MAINTAIN TEMPORARY SEDIMENT CONTROL FACILITIES UNTIL VAULT RECONSTRUCTION IS COMPLETED, INSPECTED, AND APPROVED.

POND SPRINGS POND (POND C)

1. REMOVE AND PROPERLY DISPOSE OF FLOATABLES FROM THE POND (IE PLASTIC BAGS AND BOTTLES).

2. VISUALLY INSPECT AND TEST STANDING WATER FOR OIL AND OTHER FLOATABLE HAZARDOUS MATERIALS.

3. DEWATER STANDING WATER IN THE POND TO A DEPTH OF 2IN ABOVE THE SEDIMENT ELEVATION. DEWATER THROUGH "ULTRA-DEWATERING BAGS" OR APPROVED EQUAL PER TxDOT SPECIAL SPECIFICATION 4091. DEWATERING BAGS TO BE SPECIFIED TO DETAIN BOTH OIL AND SEDIMENT/ SILT. IF FLOATABLE HAZARDOUS MATERIALS WERE FOUND PRIOR TO DEWATERING, DISPOSE OF THE BAG PROPERLY.

4. DEWATER CLEAN WATER INTO DOWNSTREAM SIDE OF FLOW SPLITTER BOX.

5. VISUALLY INSPECT AND TEST REMAINING SEDIMENT FOR HAZARDOUS MATERIALS. REMOVE SEDIMENT AND DISPOSE OF PROPERLY UPON CONCLUSION OF TESTING.

6. TEMPORARILY PLUG AND WATER SEAL THE OUTLET PIPE FROM THE POND.

7. MAINTAIN OPERATION OF SEDIMENT CONTROL IN POND DURING CONSTRUCTION. DURING AND AFTER STORM EVENTS DEWATER THE POND THROUGH THE USE OF DEWATER BAGS. DISCHARGE CLEAN WATER ON THE DOWNSTREAM SIDE OF THE FLOW DIVERSION STRUCTURE. MAINTAIN TEMPORARY SEDIMENT CONTROL FACILITIES UNTIL POND RECONSTRUCTION IS COMPLETED, INSPECTED, AND APPROVED.

WOODS POND (POND D)

01

1. REMOVE AND PROPERLY DISPOSE OF FLOATABLES FROM THE POND (IE PLASTIC BAGS AND BOTTLES).

2. VISUALLY INSPECT AND TEST STANDING WATER FOR OIL AND OTHER FLOATABLE HAZARDOUS MATERIALS.

3. DEWATER STANDING WATER IN THE POND TO A DEPTH OF 2IN ABOVE THE SEDIMENT ELEVATION. DEWATER THROUGH "ULTRA-DEWATERING BAGS" OR APPROVED EQUAL PER TxDOT SPECIAL SPECIFICATION 4091. DEWATERING BAGS TO BE SPECIFIED TO DETAIN BOTH OIL AND SEDIMENT/ SILT. IF FLOATABLE HAZARDOUS MATERIALS WERE FOUND PRIOR TO DEWATERING, DISPOSE OF THE BAG PROPERLY.

4. DEWATER CLEAN WATER INTO CHANNEL DOWNSTREAM OF POND.

5. VISUALLY INSPECT AND TEST REMAINING SEDIMENT FOR HAZARDOUS MATERIALS. REMOVE SEDIMENT AND DISPOSE OF PROPERLY UPON CONCLUSION OF TESTING.

6. TEMPORARILY PLUG AND WATER SEAL THE OUTFALL STRUCTURES FROM THE POND.

7. MAINTAIN OPERATION OF SEDIMENT CONTROL IN POND DURING CONSTRUCTION. DURING AND AFTER STORM EVENTS DEWATER THE POND THROUGH THE USE OF DEWATER BAGS. DISCHARGE CLEAN WATER ON THE DOWNSTREAM SIDE OF THE FLOW DIVERSION STRUCTURE. MAINTAIN TEMPORARY SEDIMENT CONTROL FACILITIES UNTIL POND RECONSTRUCTION IS COMPLETED, INSPECTED, AND APPROVED.

RELEASED FOR CONSTRUCTION 2024.01.25 14:41:09 -06'00'

STATE OF TEXAS
JEREMY HUTCHINS
134720
LICENSED PROFESSIONAL ENGINEER

2024.01.25 14:39:34 -06'00'

ISSUE RECORD

NO.	DESCRIPTION	DATE
00	RFC DESIGN	29MAR23
01	NDC 0133	20DEC23

CENTRAL TEXAS REGIONAL MOBILITY AUTHORITY

GREAT HILLS CONSTRUCTORS

PARSONS
TBPE Registration No. F-1481

183 NORTH MOBILITY
SEGMENT 1A
WATER QUALITY PLANS
GENERAL NOTES

DESIGNED	FED. RD. DIV. NO.		FEDERAL AID PROJECT NO.	HIGHWAY NO.
RG	6			US 183
DRAWN	STATE	DISTRICT	COUNTY	DRAWING
RG	TEXAS	AUSTIN	TRAVIS, WILLIAMSON	1AWQGNO1
CHECKED	CONTROL	SECTION	JOB	SHEET NO.
MM	0151	06	143	1AWQ006
APPROVED				
SB				

User: p003330E Date: 1/25/2024 Time: 2:32:17 PM Pen Table: 183N_Standard.tbl Plot Config: 183N PDF.pltcfg
File Name: 1A-WQGN-01.dgn

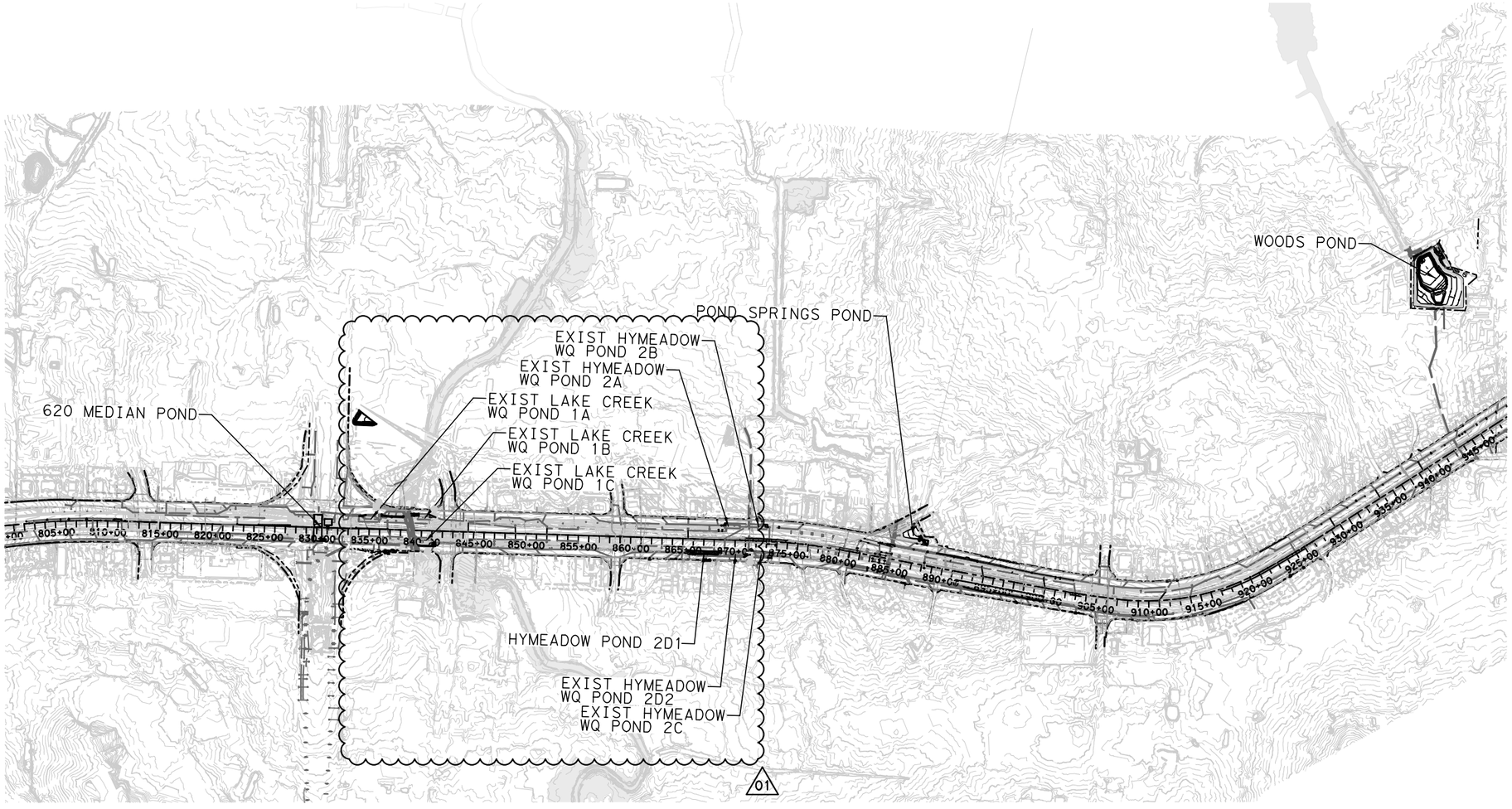

HORIZONTAL SCALE
0' 500' 1000'

RELEASED FOR CONSTRUCTION 2024.01.25 14:41:12 -06'00'

STATE OF TEXAS
JEREMY HUTCHINS
134720
LICENSED PROFESSIONAL ENGINEER

2024.01.25 14:39:35 -06'00'

ISSUE RECORD

NO.	DESCRIPTION	DATE
00	RFC DESIGN	29MAR23
01	NDC 0133	20DEC23

CENTRAL TEXAS REGIONAL MOBILITY AUTHORITY

GREAT HILLS CONSTRUCTORS

PARSONS
TBPE Registration No. F-1481

183 NORTH MOBILITY
SEGMENT 1A
WATER QUALITY PLANS
KEY MAP

DESIGNED	FED. RD. DIV. NO.		FEDERAL AID PROJECT NO.	HIGHWAY NO.
KJ	6			US 183
DRAWN	STATE	DISTRICT	COUNTY	DRAWING
VY	TEXAS	AUSTIN	TRAVIS, WILLIAMSON	1AWQGN02
CHECKED	CONTROL	SECTION	JOB	SHEET NO.
MM	0151	06	143	1AWQ007
APPROVED				
SB				

User: p003330E Date: 1/25/2024 Time: 2:33:03 PM Pen Table: 183N_Standard.tbl Plot Config: 183N PDF.pltcfg
File Name: 1A-WQGN-02.dgn

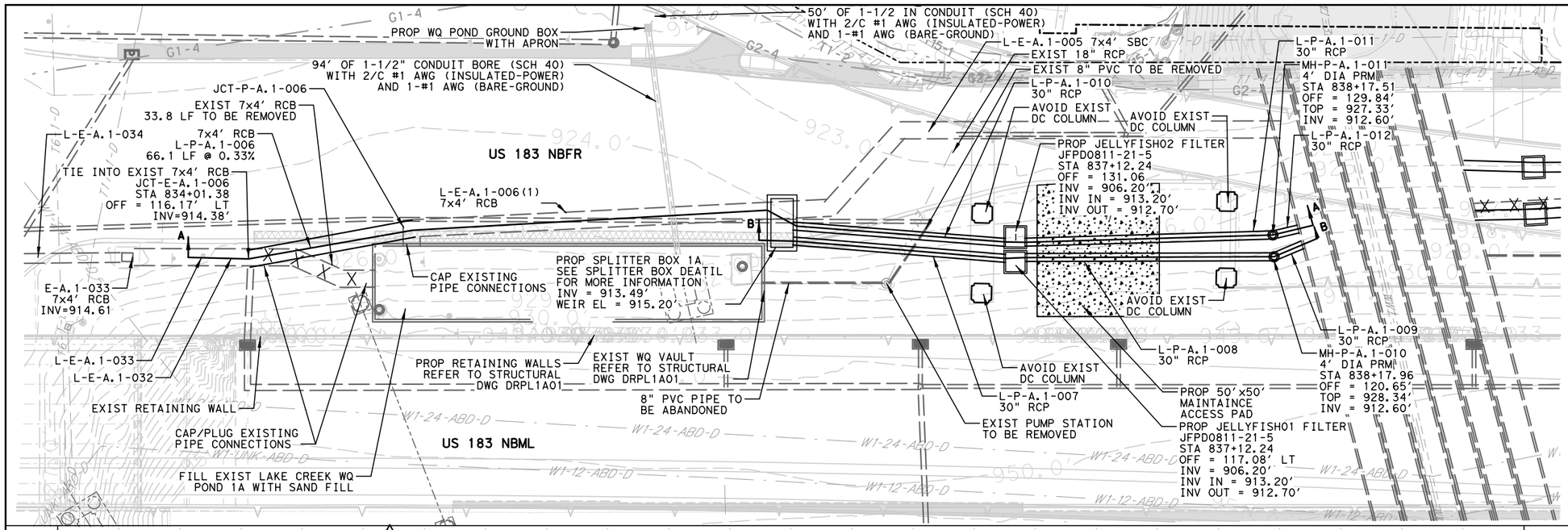

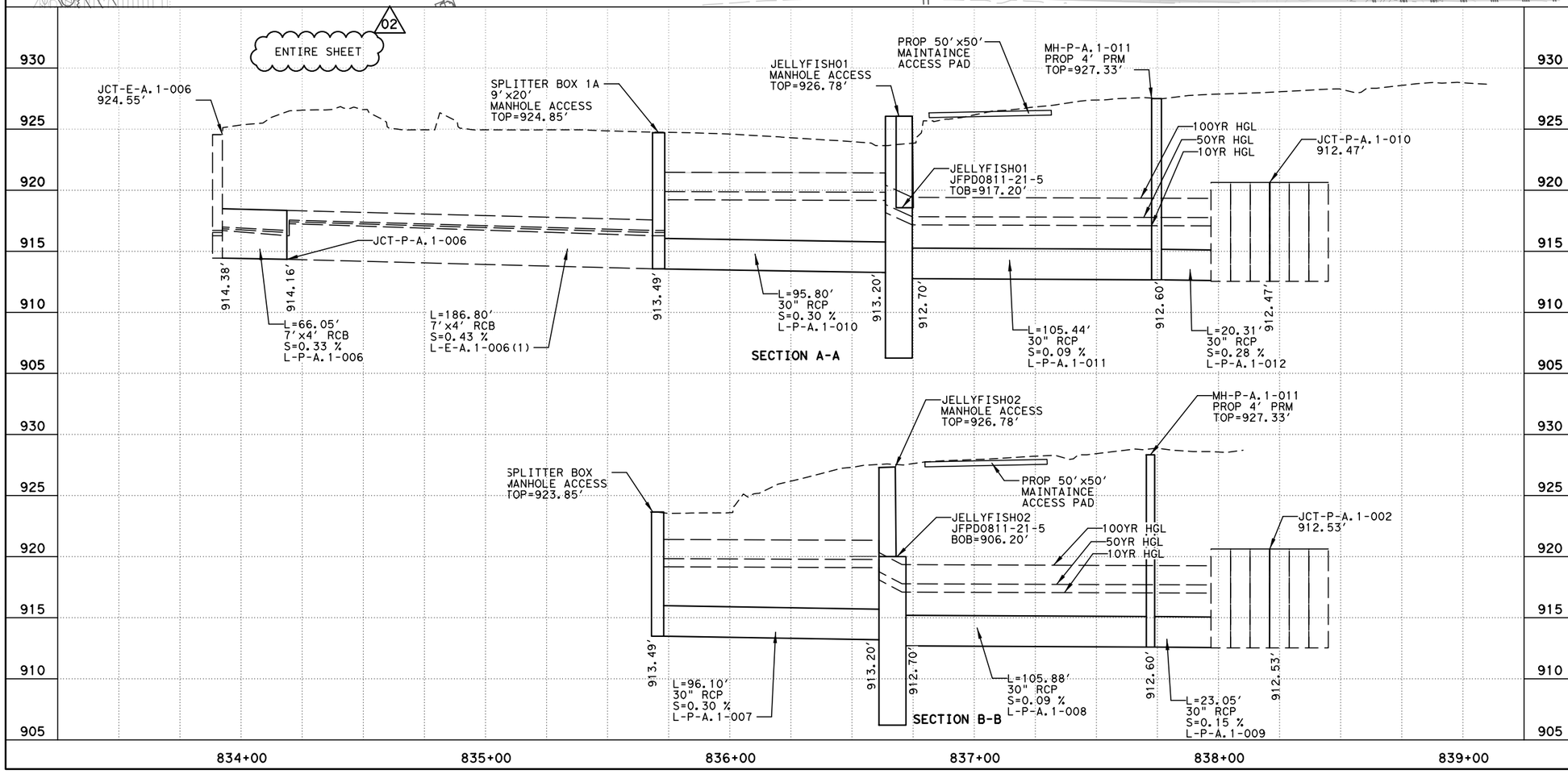



NOTES:
1. ELEVATIONS SHOW HEREON WERE DERIVED FROM AS-BUILT PLANS PROVIDED TO PARSONS.

2. CONTRACTOR SHALL FIELD VERIFY INVERT ELEVATIONS WITHIN THE EXISTING VAULT, SPLITTER BOX OPENINGS, AND UPSTREAM AND DOWNSTREAM CONNECTIONS TO EXISTING CULVERTS AND/OR STORM SEWERS PRIOR TO THE START OF WORK; CONTRACTOR SHALL BE RESPONSIBLE FOR REPORTING ANY DISCREPANCIES BETWEEN FIELD SURVEYED ELEVATIONS AND THE ELEVATIONS SHOWN ON THESE PLANS IMMEDIATELY TO THE PROJECT ENGINEER PRIOR TO THE START OF WORK.

LEGEND

- EXIST RIGHT-OF-WAY
- EXIST STORM SEWER
- PROP STORM SEWER
- EXIST CONTOURS
- PROP CONTOURS
- 10" FLEX BASE PROP PAVING
- PROP CONCRETE
- PROP PAVEMENT

RELEASED FOR CONSTRUCTION 2024.01.25 14:41:17 -06'00'

STATE OF TEXAS
JEREMY HUTCHINS
134720
LICENSED PROFESSIONAL ENGINEER

2024.01.25 14:39:44 -06'00'

ISSUE RECORD

NO.	DESCRIPTION	DATE
00	RFC DESIGN	29MAR23
01	NDC 0082	30JUN23
02	NDC 0133	20DEC23

CENTRAL TEXAS REGIONAL MOBILITY AUTHORITY

GREAT HILLS CONSTRUCTORS

PARSONS
TBPE Registration No. F-1481

183 NORTH MOBILITY
SEGMENT 1A
BASIN LAYOUT
LAKE CREEK WATER QUALITY
BASIN 1A (BASIN A)

DESIGNED	FED. RD. DIV. NO.		FEDERAL AID PROJECT NO.	HIGHWAY NO.
KR	6			US 183
DRAWN	STATE	DISTRICT	COUNTY	DRAWING
RG	TEXAS	AUSTIN	TRAVIS, WILLIAMSON	1ADRVLT1A
CHECKED	CONTROL	SECTION	JOB	SHEET NO.
MM	0151	06	143	1AWQ008
APPROVED				
SB				

User: p003330E Date: 1/25/2024 Time: 2:33:29 PM Pen Table: 183N_Standard.tbl Plot Config: 183N PDF.pltcfg
File Name: 1ADRVLT1A.dgn

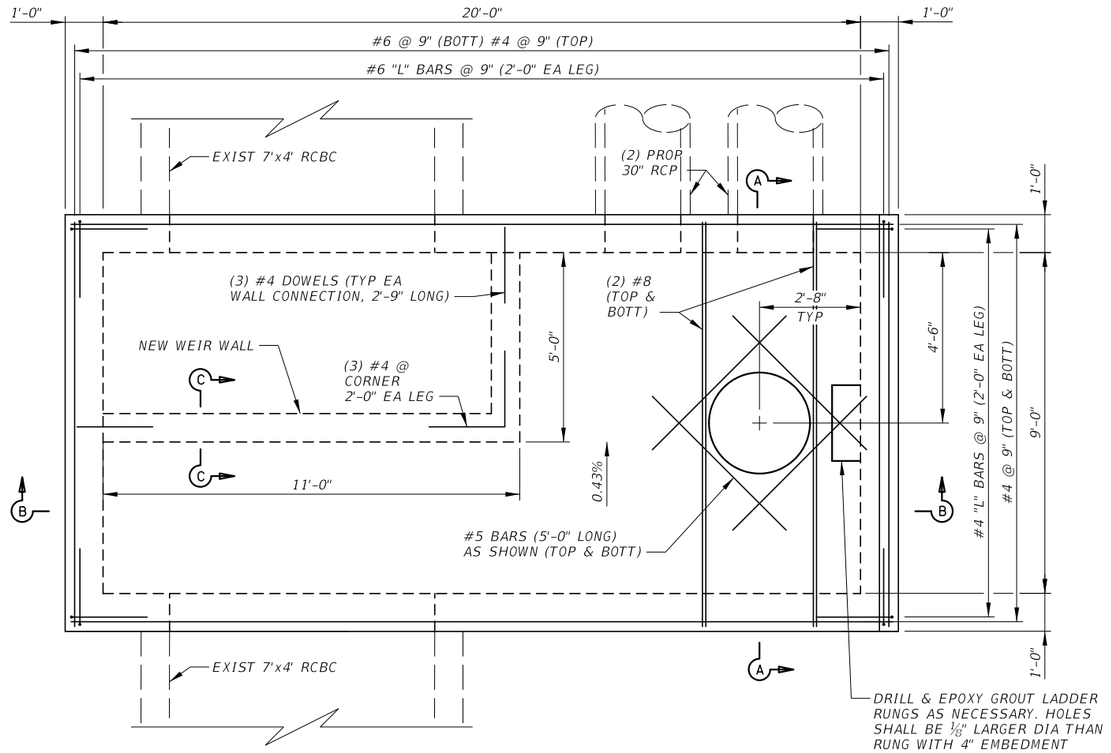

SPLITTER BOX ROOF PLAN
SCALE: 1/4" = 1'-0"

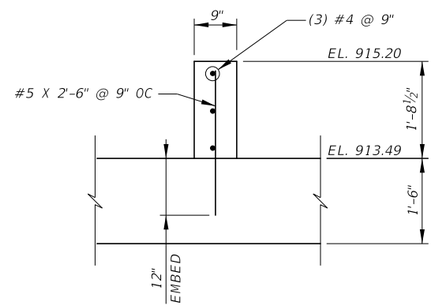

SECTION C-C
SCALE: 3/8" = 1'-0"

NOTES:

1. DESIGNED IN ACCORDANCE WITH AASHTO LRFD SPECIFICATIONS (2017) WITH CURRENT INTERIM REVISIONS AS MODIFIED BY TxDOT DESIGN PRACTICES.
2. PROVIDE CLASS C CONCRETE (f'c = 3,600 psi).
3. PROVIDE GRADE 60 REINFORCING STEEL. ALL REINFORCING SHALL BE EPOXY COATED.
4. SEE SHEET 1AWQ018B FOR WALL OPENING DETAILS.
5. REFER TO WATER QUALITY PLANS FOR PIPE OR CULVERT INVERT ELEVATIONS.
6. THE INVERT ELEVATION OF EACH OPENING SHALL MATCH THE SLOPING SLAB ELEVATION OF THE SPLITTER BOX.

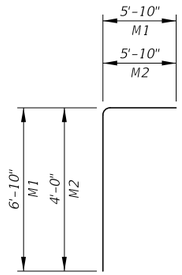

BARS M (#6)

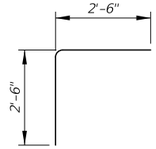

BARS L (#4)

NEW SHEET

RELEASED FOR CONSTRUCTION 2024.01.16 13:34:20 -05'00'

STATE OF TEXAS
CHAD D. BINION
145371
LICENSED PROFESSIONAL ENGINEER

2024.01.16 13:34:10 -05'00'

ISSUE RECORD

NO.	DESCRIPTION	DATE
00	NDC-0133	20DEC23

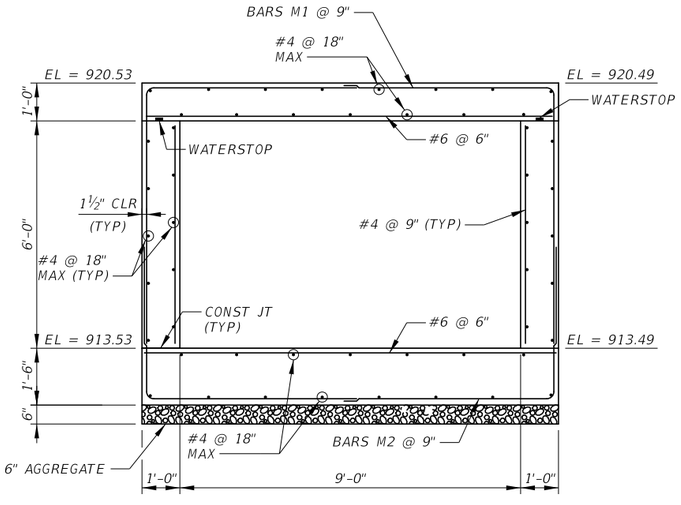

SECTION A-A
SCALE: 1/4" = 1'-0"

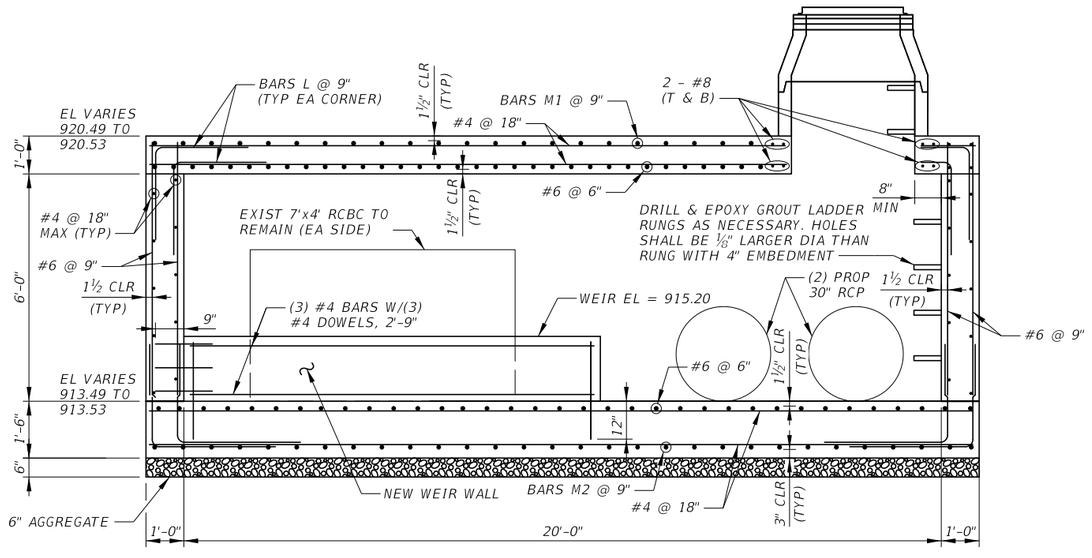

SECTION B-B
SCALE: 1/4" = 1'-0"

CENTRAL TEXAS REGIONAL MOBILITY AUTHORITY

GREAT HILLS CONSTRUCTORS

PARSONS
TBPE Registration No. F-1481

183 NORTH MOBILITY
SEGMENT 1A - LAKECREEK WQ

1A SPLITTER BOX DETAILS (SHEET 1 OF 2)

DESIGNED	FED. RD. DIV. NO.		FEDERAL AID PROJECT NO.	HIGHWAY NO.
CB	6			US 183
DRAWN	STATE	DISTRICT	COUNTY	DRAWING
JC	TEXAS	AUSTIN	TRAVIS, WILLIAMSON	1AWQDT03
CHECKED	CONTROL	SECTION	JOB	SHEET NO.
SS	0151	06	143	1AWQ018A
APPROVED				
WD				

User: p004436F Date: 1/16/2024 Time: 1:32:33 PM Pen Table: 183N_Standard.tbl Plot Config: 183N PDF.pltcfg
File Name: 1AWQDT03.dgn

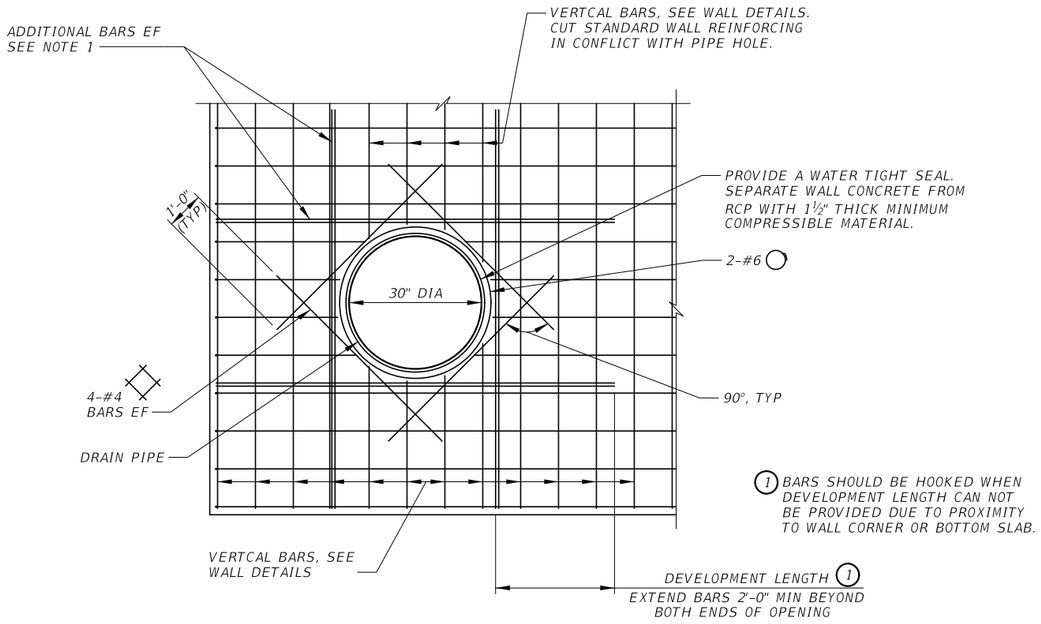

TYPICAL WALL OPENING DETAIL
N.T.S.

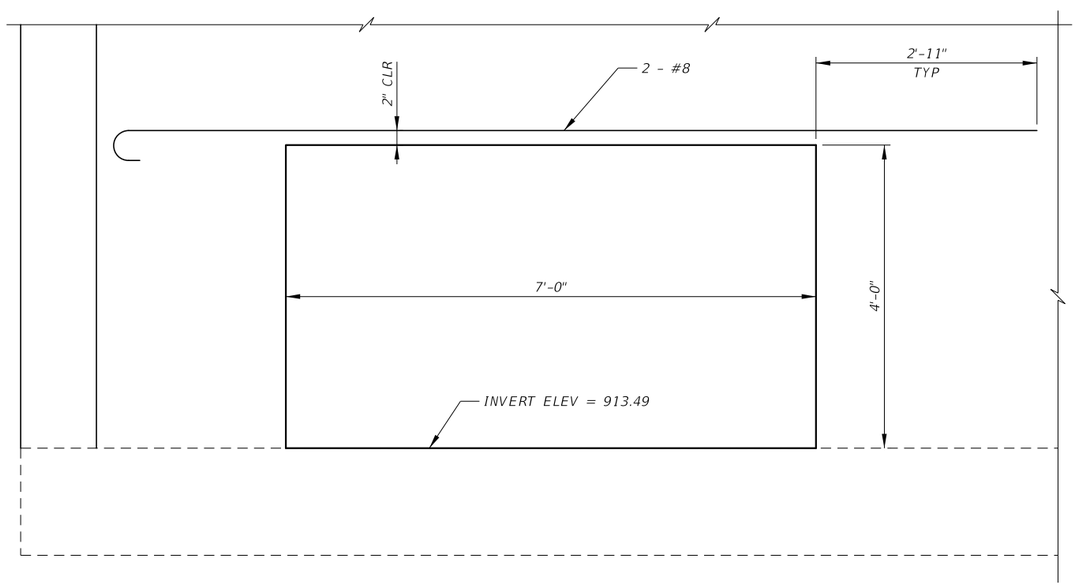

7 x 4 CULVERT WALL OPENING ADDITIONAL REINFORCEMENT
(ONE OPENING IN EACH WALL RW1A-3 & RW1A-5)
SCALE: ½" = 1'-0"

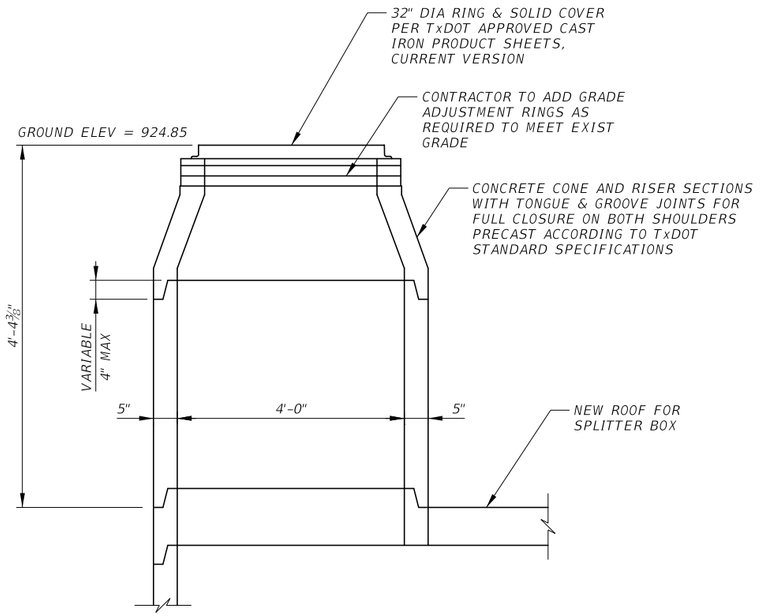

1A MANHOLE DETAIL
N.T.S.

NOTES:

1. ADJACENT TO EACH SIDE OF THE OPENING, PLACE ADDITIONAL REINFORCEMENT EQUAL TO HALF THE INTERRUPTED MAIN REINFORCEMENT.
2. REPAIR CONCRETE SURFACES AFTER SAWCUTTING AND DRILLING DOWELS ACCORDING TO TXDOT CONCRETE REPAIR MANUAL.

NEW SHEET

RELEASED FOR CONSTRUCTION 2024.01.15 10:35:03 -05'00'

STATE OF TEXAS
CHAD D. BINION
145371
PROFESSIONAL ENGINEER

2024.01.15 10:34:46 -05'00'

ISSUE RECORD

NO.	DESCRIPTION	DATE
00	NDC-0133	20DEC23

CENTRAL TEXAS REGIONAL MOBILITY AUTHORITY

GREAT HILLS CONSTRUCTORS

PARSONS
TBPE Registration No. F-1481

183 NORTH MOBILITY
SEGMENT 1A - LAKECREEK WQ

1A SPLITTER BOX DETAILS (SHEET 2 OF 2)

DESIGNED	FED. RD. DIV. NO.		FEDERAL AID PROJECT NO.	HIGHWAY NO.
CB	6			US 183
DRAWN	STATE	DISTRICT	COUNTY	DRAWING
JG	TEXAS	AUSTIN	TRAVIS, WILLIAMSON	1AWQDT04
CHECKED	CONTROL	SECTION	JOB	SHEET NO.
HA	0151	06	143	1AWQ008B
APPROVED				
WD				

User: p0041844 Date: 1/13/2024 Time: 8:52:34 AM Pen Table: 183N_Standard.tbl Plot Config: 183N PDF.pltcfg
File Name: 1AWQDT04.dgn

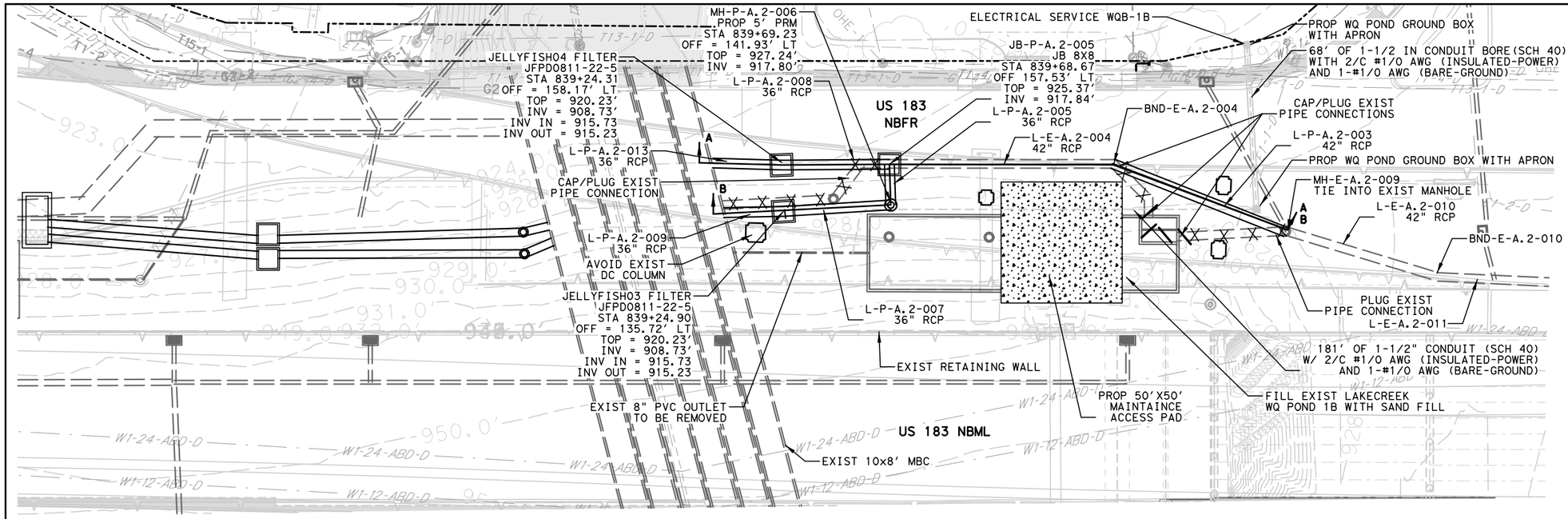

NOTES:
1. ELEVATIONS SHOW HEREON WERE DERIVED FROM AS-BUILT PLANS PROVIDED TO PARSONS.

2. CONTRACTOR SHALL FIELD VERIFY INVERT ELEVATIONS WITHIN THE EXISTING VAULT, SPLITTER BOX OPENINGS, AND UPSTREAM AND DOWNSTREAM CONNECTIONS TO EXISTING CULVERTS AND/OR STORM SEWERS PRIOR TO THE START OF WORK; CONTRACTOR SHALL BE RESPONSIBLE FOR REPORTING ANY DISCREPANCIES BETWEEN FIELD SURVEYED ELEVATIONS AND THE ELEVATIONS SHOWN ON THESE PLANS IMMEDIATELY TO THE PROJECT ENGINEER PRIOR TO THE START OF WORK.

LEGEND

- EXIST RIGHT-OF-WAY
- EXIST STORM SEWER
- PROP STORM SEWER
- EXIST CONTOURS
- PROP CONTOURS
- 10" FLEX BASE PROP PAVING
- PROP CONCRETE
- PROP PAVEMENT

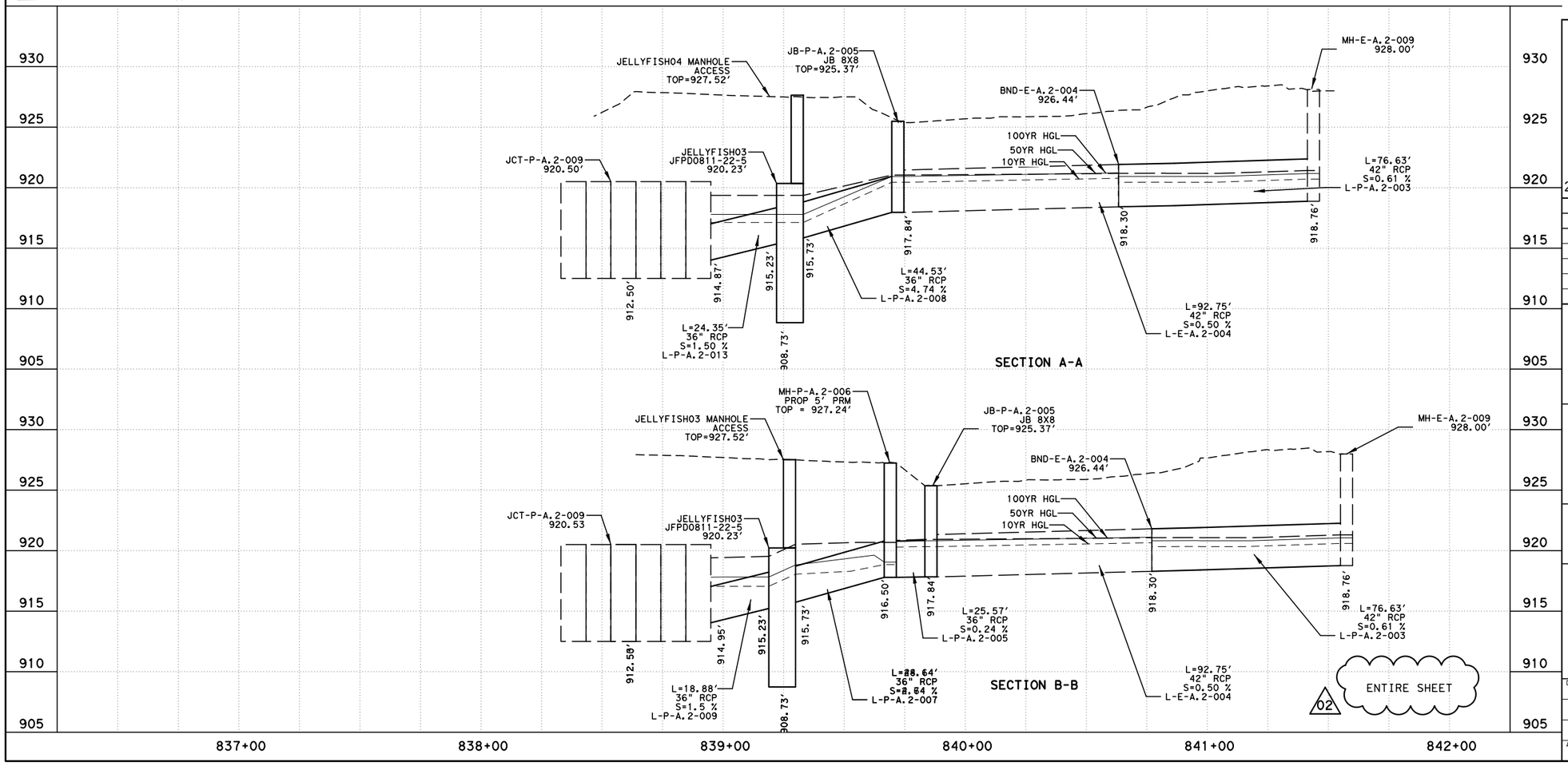

02 ENTIRE SHEET

RELEASED FOR CONSTRUCTION 2024.01.25 14:41:19 -06'00'

STATE OF TEXAS
JEREMY HUTCHINS
134720
LICENSED PROFESSIONAL ENGINEER
2024.01.25 14:39:45 -06'00'

ISSUE RECORD

NO.	DESCRIPTION	DATE
00	RFC DESIGN	29MAR23
01	NDC 0082	30JUN23
02	NDC 0133	20DEC23

CENTRAL TEXAS REGIONAL MOBILITY AUTHORITY

GREAT HILLS CONSTRUCTORS

PARSONS
TBPE Registration No. F-1481

183 NORTH MOBILITY
SEGMENT 1A
BASIN LAYOUT
LAKE CREEK WATER QUALITY
BASIN 1B (BASIN A)

DESIGNED	FED. RD. DIV. NO.	FEDERAL AID PROJECT NO.	HIGHWAY NO.
KJ	6		US 183
DRAWN	STATE / DISTRICT	COUNTY	DRAWING
RG	TEXAS / AUSTIN	TRAVIS, WILLIAMSON	1ADRVLT1B
CHECKED	CONTROL / SECTION	JOB	SHEET NO.
MM	0151 / 06	143	1AWQ009
APPROVED			
SB			

User: p003330E Date: 1/25/2024 Time: 2:33:42 PM Pen Table: 183N_Standard.tbl Plot Config: 183N PDF.pltcfg
File Name: 1ADRVLT1B.dgn

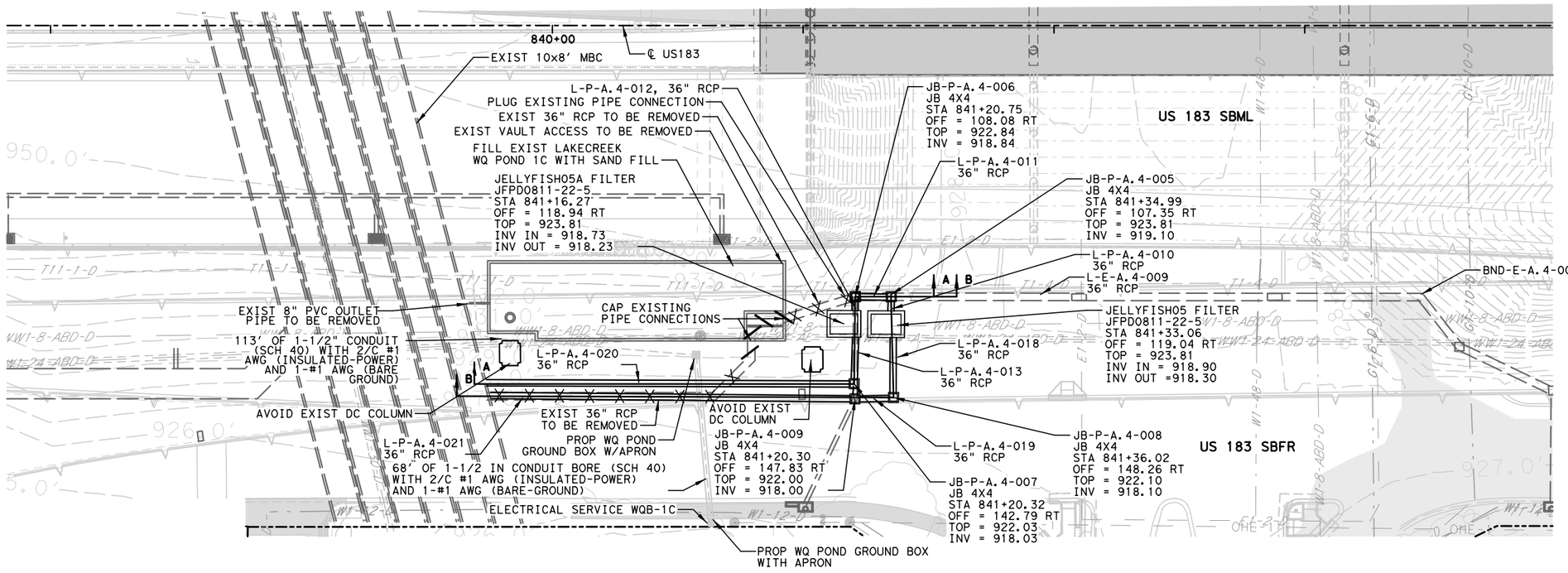

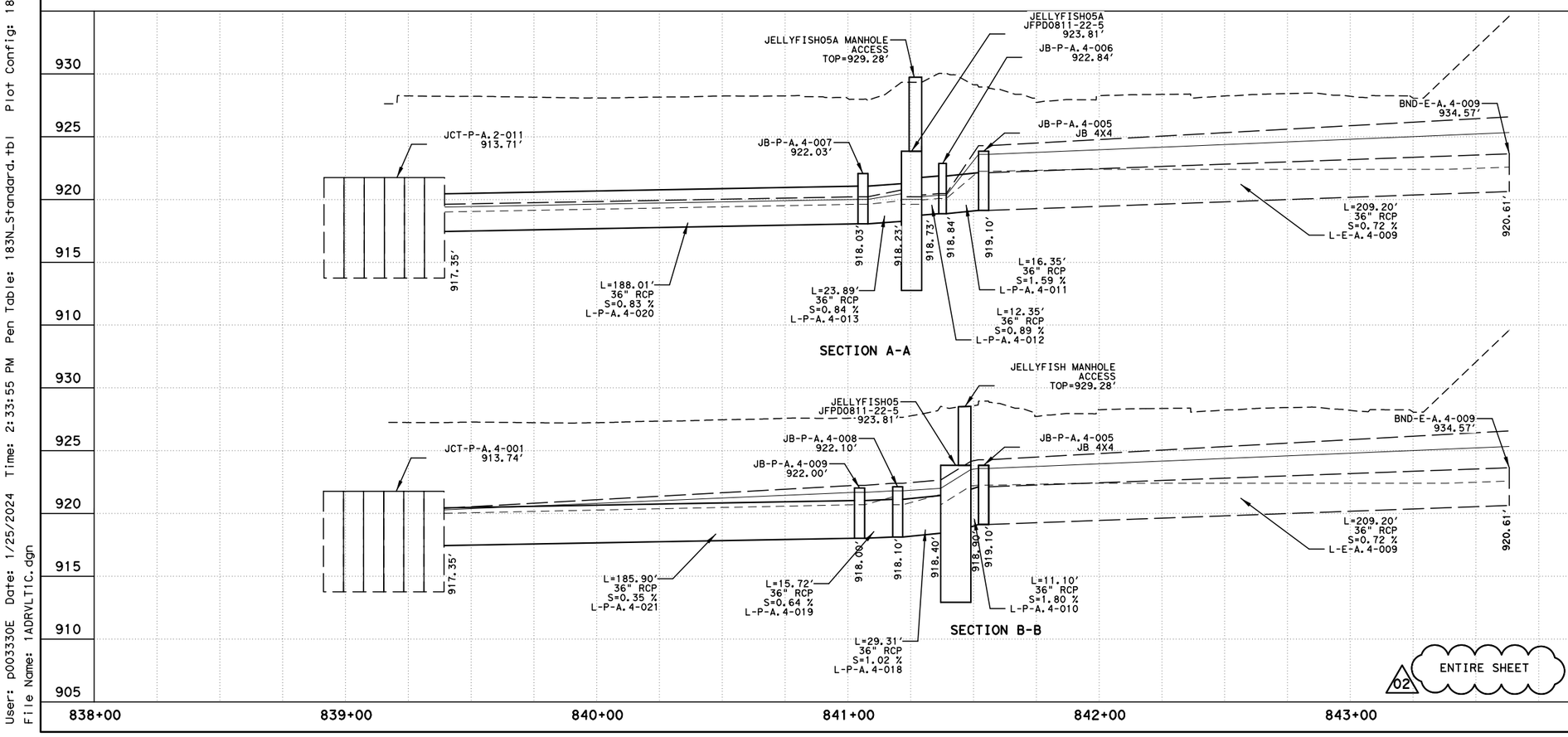

HORIZONTAL SCALE
0' 25' 50'
0' 5' 10'
VERTICAL SCALE

NOTES:
1. ELEVATIONS SHOW HEREON WERE DERIVED FROM AS-BUILT PLANS PROVIDED TO PARSONS.

2. CONTRACTOR SHALL FIELD VERIFY INVERT ELEVATIONS WITHIN THE EXISTING VAULT, SPLITTER BOX OPENINGS, AND UPSTREAM AND DOWNSTREAM CONNECTIONS TO EXISTING CULVERTS AND/OR SEWERS PRIOR TO THE START OF WORK; CONTRACTOR SHALL BE RESPONSIBLE FOR REPORTING ANY DISCREPANCIES BETWEEN FIELD SURVEYED ELEVATIONS AND THE ELEVATIONS SHOWN ON THESE PLANS IMMEDIATELY TO THE PROJECT ENGINEER PRIOR TO THE START OF WORK.

LEGEND

- EXIST RIGHT-OF-WAY
- EXIST STORM SEWER
- PROP STORM SEWER
- EXIST CONTOURS
- PROP CONTOURS
- 10" FLEX BASE PROP PAVING
- PROP CONCRETE
- PROP PAVEMENT

RELEASED FOR CONSTRUCTION 2024.01.25 14:41:21 -06'00'

STATE OF TEXAS
JEREMY HUTCHINS
134720
LICENSED PROFESSIONAL ENGINEER
2024.01.25 14:39:47 -06'00'

ISSUE RECORD		
NO.	DESCRIPTION	DATE
00	RFC DESIGN	29MAR23
01	NDC 0082	30JUN23
02	NDC 0133	20DEC23

CENTRAL TEXAS REGIONAL MOBILITY AUTHORITY

GREAT HILLS CONSTRUCTORS

PARSONS
TBPE Registration No. F-1481

183 NORTH MOBILITY
SEGMENT 1A
BASIN LAYOUT
LAKE CREEK WATER QUALITY
BASIN 1C (BASIN A)

02 ENTIRE SHEET

DESIGNED	FED. RD. DIV. NO.		FEDERAL AID PROJECT NO.	HIGHWAY NO.
KR	6			US 183
DRAWN	STATE	DISTRICT	COUNTY	DRAWING
RG	TEXAS	AUSTIN	TRAVIS, WILLIAMSON	1ADRVLT1C
CHECKED	CONTROL	SECTION	JOB	SHEET NO.
MM	0151	06	143	1AWQ010
APPROVED				
SB				

User: p003330E Date: 1/25/2024 Time: 2:33:55 PM Pen Table: 183N_Standard.tbl Plot Config: 183N PDF.pltcfg
File Name: 1ADRVLT1C.dgn

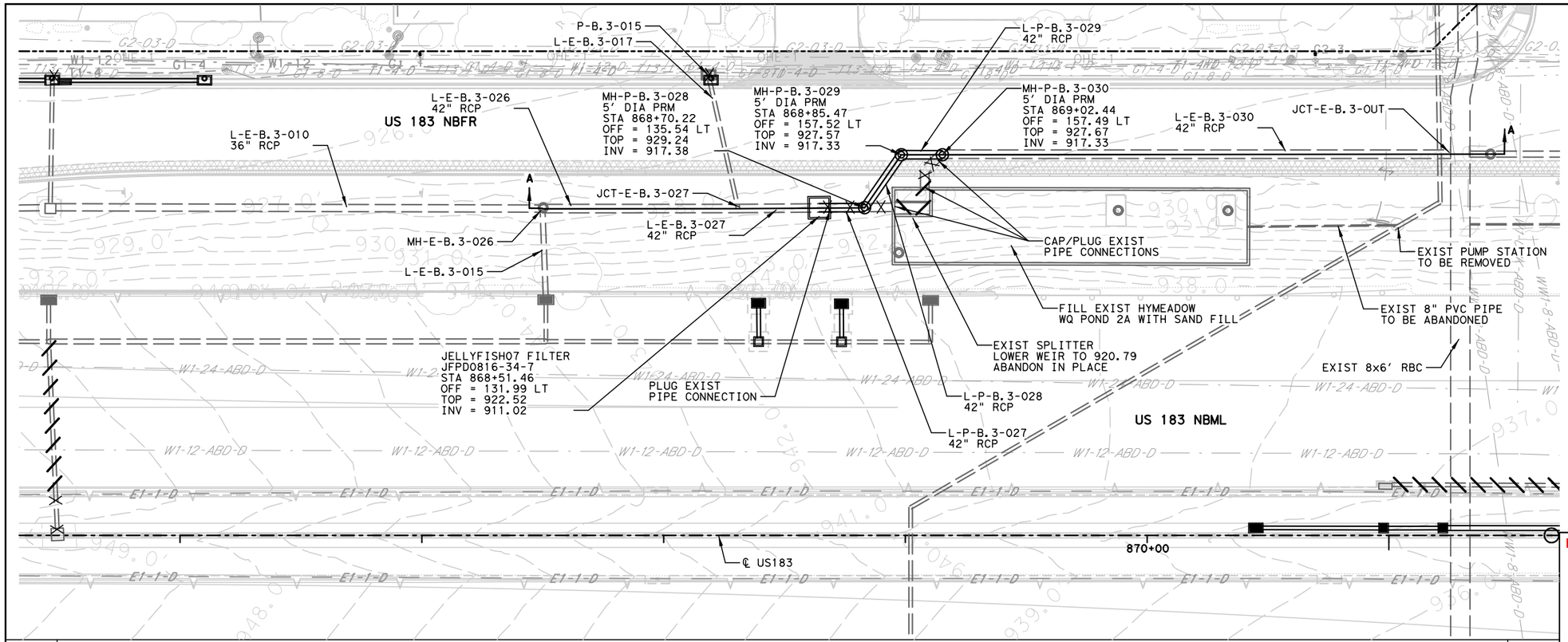

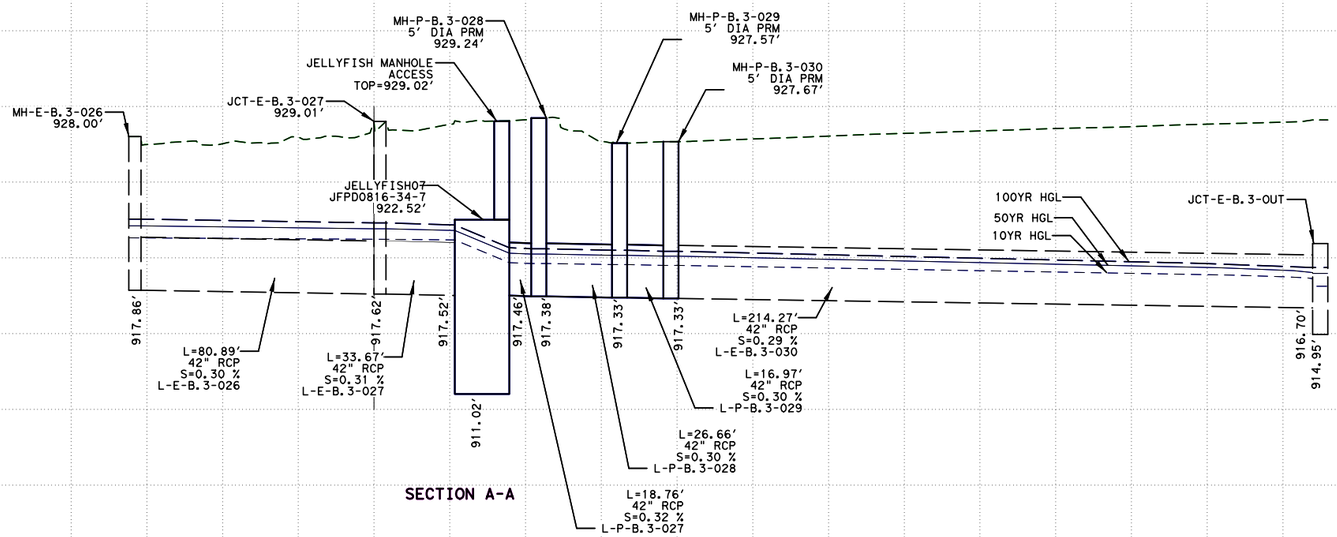

SECTION A-A

02 ENTIRE SHEET

HORIZONTAL SCALE
0' 25' 50'
VERTICAL SCALE
0' 5' 10'

NOTES:
1. ELEVATIONS SHOW HEREON WERE DERIVED FROM AS-BUILT PLANS PROVIDED TO PARSONS.

2. CONTRACTOR SHALL FIELD VERIFY INVERT ELEVATIONS WITHIHYMEADOWSTING VAULT, SPLITTER BOX OPENWQ PONDND UPSTREAM AND DOWNSTREAM CONNECT (2B) TO EXISTING CULVERTS AND/OR STORM SEWERS PRIOR TO THE START OF WORK; CONTRACTOR SHALL BE RESPONSIBLE FOR REPORTING ANY DISCREPANCIES BETWEEN FIELD SURVEYED ELEVATIONS AND THE ELEVATIONS SHOWN ON THESE PLANS IMMEDIATELY TO THE PROJECT ENGINEER PRIOR TO THE START OF WORK.

LEGEND

- EXIST RIGHT-OF-WAY
- EXIST STORM SEWER
- PROP STORM SEWER
- EXIST CONTOURS
- PROP CONTOURS
- 10" FLEX BASE PROP PAVING
- PROP CONCRETE
- PROP PAVEMENT

RELEASED FOR CONSTRUCTION 2024.01.25 14:41:22 -06'00'

STATE OF TEXAS
JEREMY HUTCHINS
134720
LICENSED
PROFESSIONAL ENGINEER

2024.01.25 14:39:48 -06'00'

ISSUE RECORD

NO.	DESCRIPTION	DATE
00	RFC DESIGN	29MAR23
01	NDC 0082	30JUN23
02	NDC 0133	20DEC23

CENTRAL TEXAS REGIONAL MOBILITY AUTHORITY

GREAT HILLS CONSTRUCTORS

PARSONS
TBPE Registration No. F-1481

183 NORTH MOBILITY
SEGMENT 1A
BASIN LAYOUT
HYMEADOW WATER QUALITY BASIN 2A (BASIN B)

DESIGNED	FED. RD. DIV. NO.		FEDERAL AID PROJECT NO.	HIGHWAY NO.
KR	6			US 183
DRAWN	STATE	DISTRICT	COUNTY	DRAWING
RG	TEXAS	AUSTIN	TRAVIS, WILLIAMSON	1ADRVLT2A
CHECKED	CONTROL	SECTION	JOB	SHEET NO.
MM	0151	06	143	1AWQ011
APPROVED				
SB				

User: p003330E Date: 1/25/2024 Time: 2:34:12 PM Pen Table: 183N_Standard.tbl Plot Config:
File Name: 1ADRVLT2A.dgn

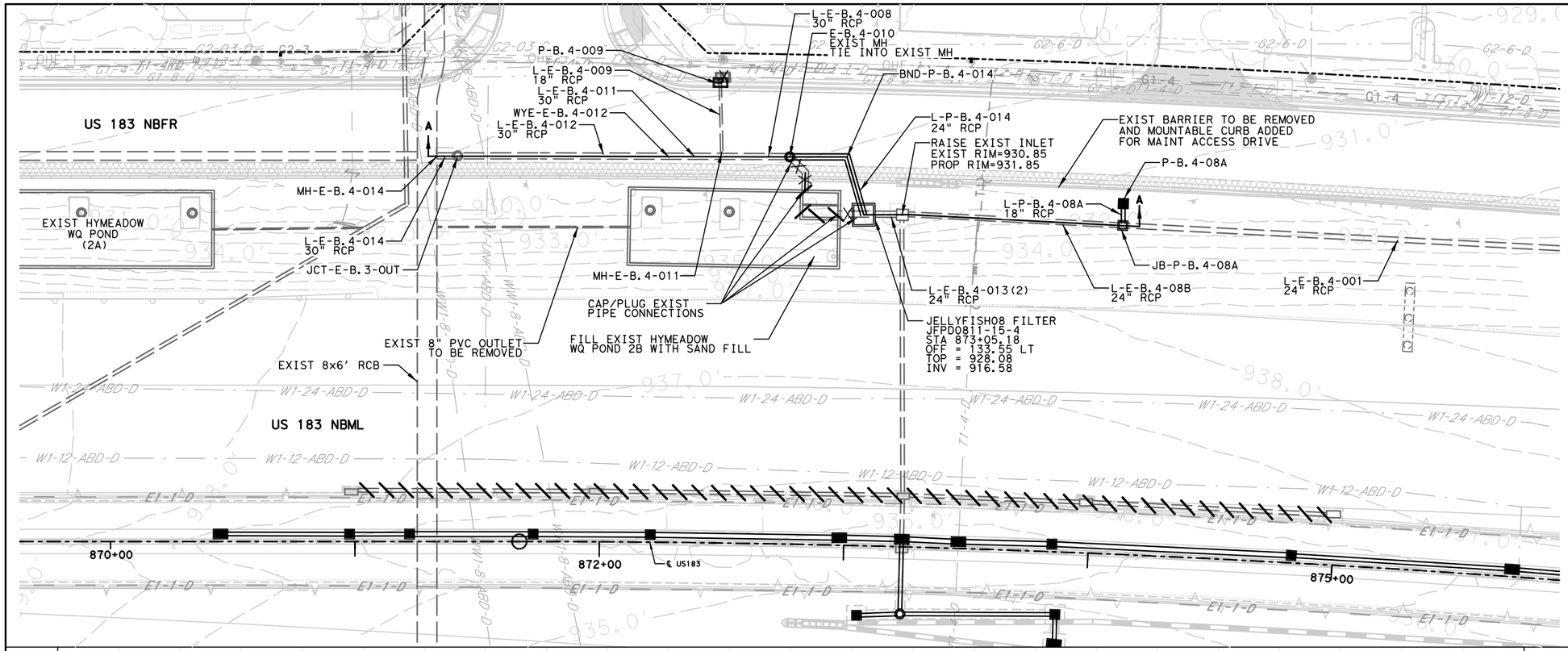

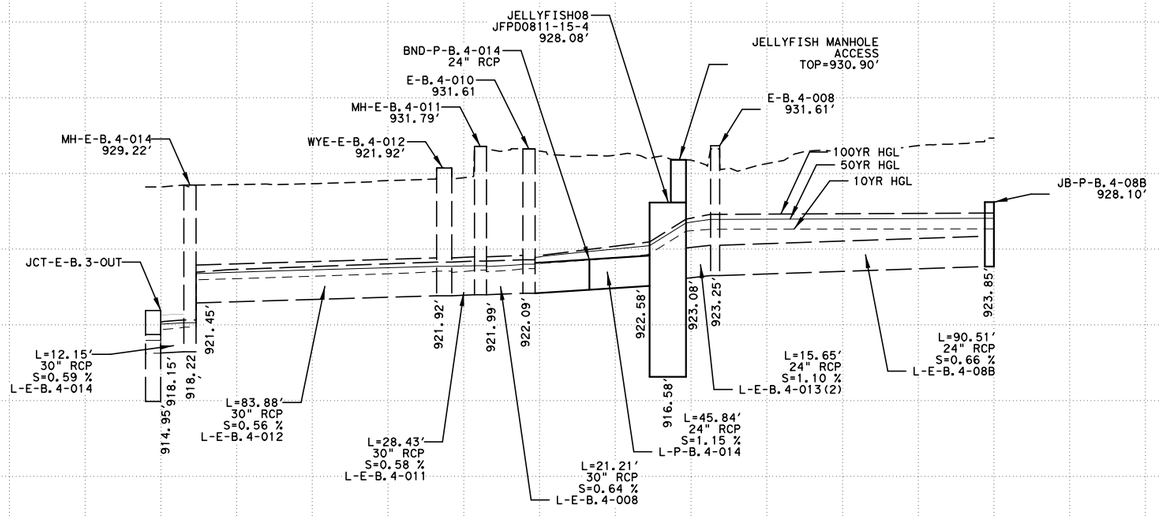

SECTION A-A

02 ENTIRE SHEET

HORIZONTAL SCALE
0' 25' 50'
0' 5' 10'
VERTICAL SCALE

NOTES:
1. ELEVATIONS SHOW HEREON WERE DERIVED FROM AS-BUILT PLANS PROVIDED TO PARSONS.

2. CONTRACTOR SHALL FIELD VERIFY INVERT ELEVATIONS WITHIN THE EXISTING VAULT, SPLITTER BOX OPENINGS, AND UPSTREAM AND DOWNSTREAM CONNECTIONS TO EXISTING CULVERTS AND/OR STORM SEWERS PRIOR TO THE START OF WORK; CONTRACTOR SHALL BE RESPONSIBLE FOR REPORTING ANY DISCREPANCIES BETWEEN FIELD SURVEYED ELEVATIONS AND THE ELEVATIONS SHOWN ON THESE PLANS IMMEDIATELY TO THE PROJECT ENGINEER PRIOR TO THE START OF WORK.

LEGEND

- EXIST RIGHT-OF-WAY
- EXIST STORM SEWER
- PROP STORM SEWER
- EXIST CONTOURS
- PROP CONTOURS
- 10" FLEX BASE PROP PAVING
- PROP CONCRETE
- PROP PAVEMENT

RELEASED FOR CONSTRUCTION 2024.01.25 14:41:23 -06'00'

STATE OF TEXAS
JEREMY HUTCHINS
134720
LICENSED PROFESSIONAL ENGINEER

2024.01.25 14:39:49 -06'00'

ISSUE RECORD

NO.	DESCRIPTION	DATE
00	RFC DESIGN	29MAR23
01	NDC 0082	30JUN23
02	NDC 0133	20DEC23

CENTRAL TEXAS REGIONAL MOBILITY AUTHORITY

GREAT HILLS CONSTRUCTORS

PARSONS
TBPE Registration No. F-1481

183 NORTH MOBILITY
SEGMENT 1A
BASIN LAYOUT
HYMEADOW WATER QUALITY BASIN 2B (BASIN B)

DESIGNED	FED. RD. DIV. NO.		FEDERAL AID PROJECT NO.	HIGHWAY NO.
KR	6			US 183
DRAWN	STATE	DISTRICT	COUNTY	DRAWING
RG	TEXAS	AUSTIN	TRAVIS, WILLIAMSON	1ADRVLT2B
CHECKED	CONTROL	SECTION	JOB	SHEET NO.
MM	0151	06	143	1AWQ012
APPROVED				
SB				

User: p003330E Date: 1/25/2024 Time: 2:34:24 PM Pen Table: 183N_Standard.tbl Plot Config: 183N PDF.pltcfg
File Name: 1ADRVLT2B.dgn

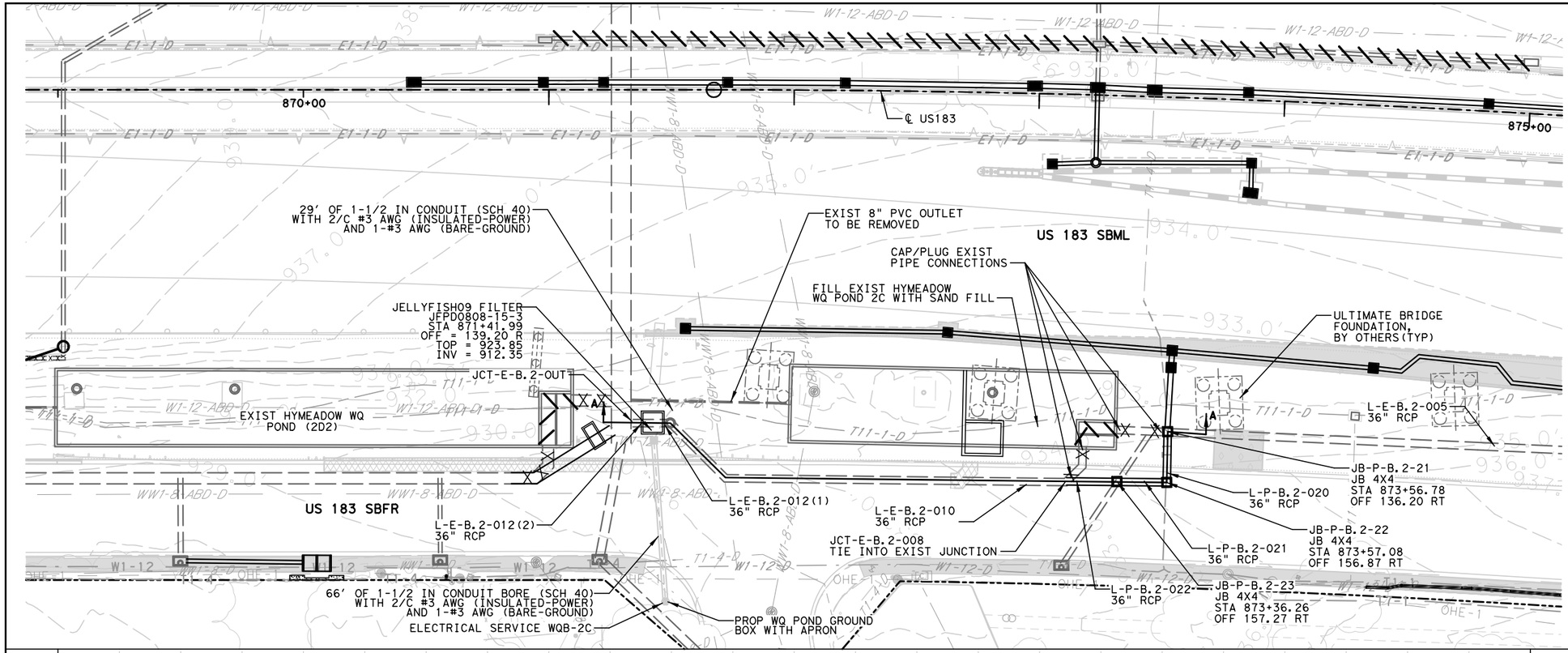

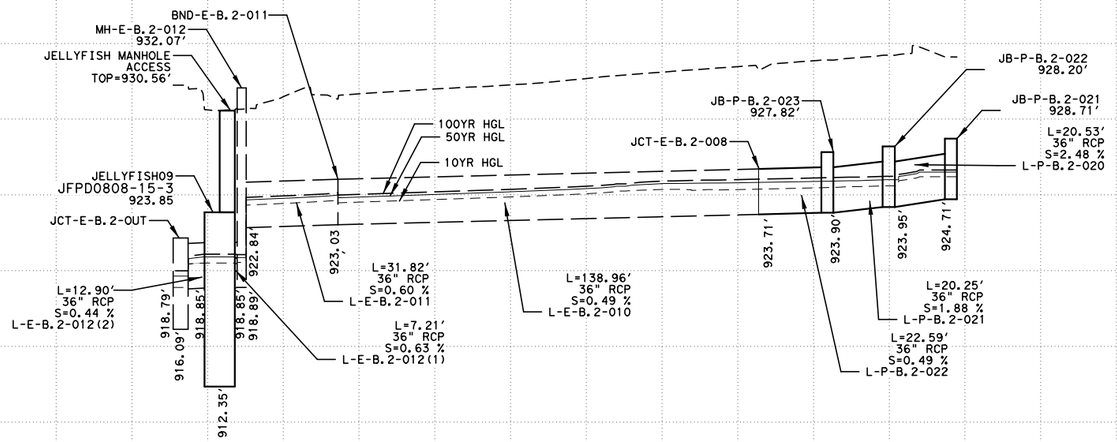

SECTION A-A

02 ENTIRE SHEET

HORIZONTAL SCALE
0' 25' 50'
0' 5' 10'
VERTICAL SCALE

NOTES:
1. ELEVATIONS SHOW HEREON WERE DERIVED FROM AS-BUILT PLANS PROVIDED TO PARSONS.

2. CONTRACTOR SHALL FIELD VERIFY INVERT ELEVATIONS WITHIN THE EXISTING VAULT, SPLITTER BOX OPENINGS, AND UPSTREAM AND DOWNSTREAM CONNECTIONS TO EXISTING CULVERTS AND/OR SEWERS PRIOR TO THE START OF WORK; CONTRACTOR SHALL BE RESPONSIBLE FOR REPORTING ANY DISCREPANCIES BETWEEN FIELD SURVEYED ELEVATIONS AND THE ELEVATIONS SHOWN ON THESE PLANS IMMEDIATELY TO THE PROJECT ENGINEER PRIOR TO THE START OF WORK.

LEGEND

- EXIST RIGHT-OF-WAY
- EXIST STORM SEWER
- PROP STORM SEWER
- EXIST CONTOURS
- PROP CONTOURS
- 10" FLEX BASE PROP PAVING
- PROP CONCRETE
- PROP PAVEMENT

RELEASED FOR CONSTRUCTION 2024.01.25 14:41:24 -06'00'

STATE OF TEXAS
JEREMY HUTCHINS
134720
LICENSED
PROFESSIONAL ENGINEER

2024.01.25 14:39:50 -06'00'

ISSUE RECORD

NO.	DESCRIPTION	DATE
00	RFC DESIGN	29MAR23
01	NDC 0082	30JUN23
02	NDC 0133	20DEC23

CENTRAL TEXAS REGIONAL MOBILITY AUTHORITY

GREAT HILLS CONSTRUCTORS

PARSONS
TBPE Registration No. F-1481

183 NORTH MOBILITY
SEGMENT 1A
BASIN LAYOUT
HYMEADOW WATER QUALITY BASIN 2C (BASIN B)

DESIGNED	FED. RD. DIV. NO.		FEDERAL AID PROJECT NO.	HIGHWAY NO.
KR	6			US 183
DRAWN	STATE	DISTRICT	COUNTY	DRAWING
RG	TEXAS	AUSTIN	TRAVIS, WILLIAMSON	1ADRVLT2C
CHECKED	CONTROL	SECTION	JOB	SHEET NO.
MM	0151	06	143	1AWQ013
APPROVED				
SB				

User: p003330E Date: 1/25/2024 Time: 2:34:37 PM Pen Table: 183N_Standard.tbl Plot Config: 183N PDF.pltcfg
File Name: 1ADRVLT2C.dgn

ELEVATION STORAGE TABLE			
ELEVATION	AREA (SQ FT)	AREA (AC)	VOLUME (AC FT)
917.24	10	0.000	0.000
918.00	1,358	0.031	0.009
918.50	2,108	0.048	0.029 *
919.00	2,858	0.066	0.056
920.00	4,219	0.097	0.137
921.00	4,568	0.105	0.238
921.20	4,579	0.105	0.259 **
922.00	4,626	0.106	0.343
923.00	4,678	0.107	0.450
924.00	4,730	0.109	0.558
925.00	4,782	0.110	0.667
926.00	4,834	0.111	0.777
927.00	5,172	0.119	0.892
928.00	5,224	0.120	1.012
929.00	5,276	0.121	1.132
930.00	5,328	0.122	1.254
931.00	5,380	0.124	1.377

* SEDIMENT STORAGE
** WQEL

POND POINTS TABLE				
POINT #	NORTHING	EASTING	TOW ELEV	FG RW/L
1	10140993.27	3097029.71	938.00	931.00
2	10140982.77	3097001.61	933.00	920.63
3	10140814.78	3097064.37	933.00	917.60
4	10140825.28	3097092.47	938.00	917.60

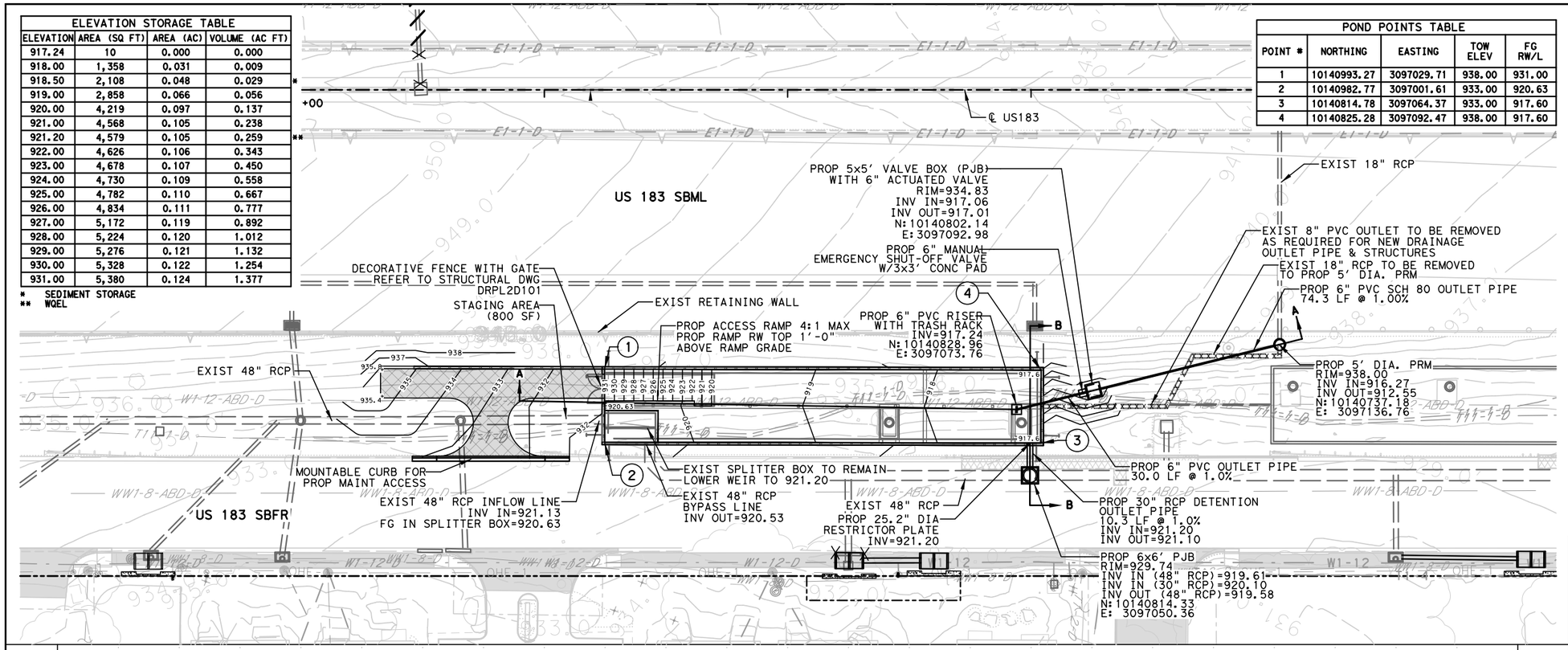

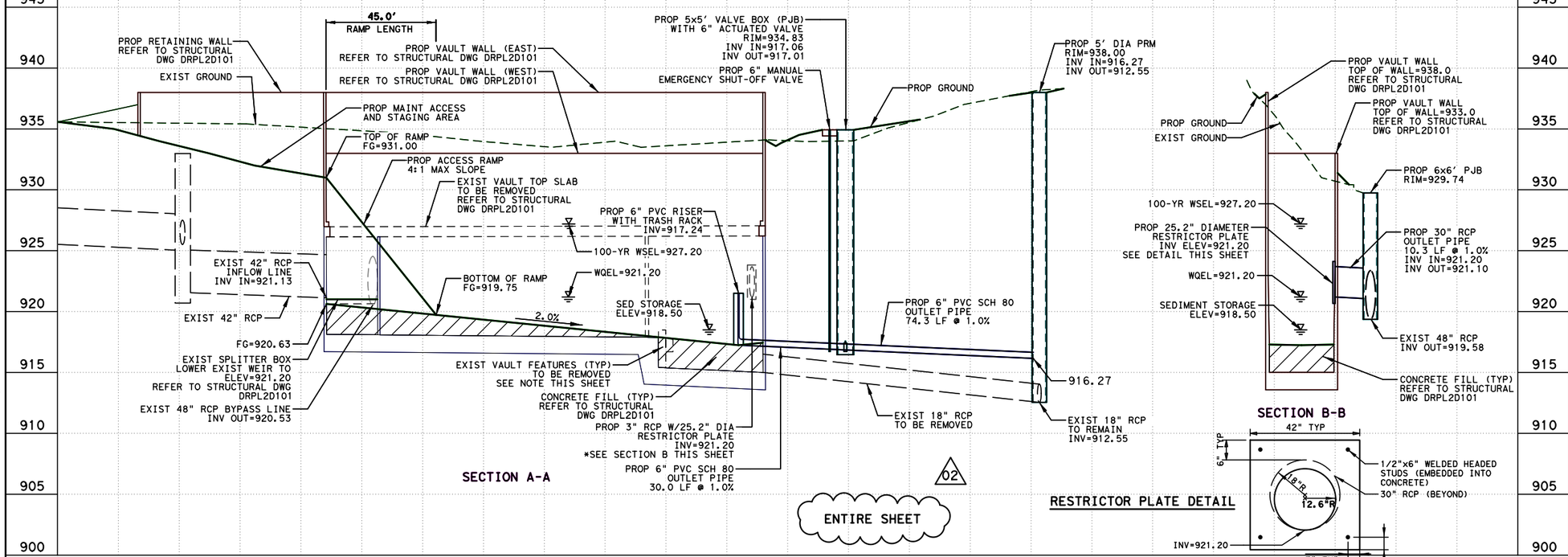



NOTES:
1. ELEVATIONS SHOW HEREON WERE DERIVED FROM AS-BUILT PLANS PROVIDED TO PARSONS.

2. CONTRACTOR SHALL FIELD VERIFY INVERT ELEVATIONS WITHIN THE EXISTING VAULT, SPLITTER BOX OPENINGS, AND UPSTREAM AND DOWNSTREAM CONNECTIONS TO EXISTING CULVERTS AND/OR SEWERS PRIOR TO THE START OF WORK; CONTRACTOR SHALL BE RESPONSIBLE FOR REPORTING ANY DISCREPANCIES BETWEEN FIELD SURVEYED ELEVATIONS AND THE ELEVATIONS SHOWN ON THESE PLANS IMMEDIATELY TO THE PROJECT ENGINEER PRIOR TO THE START OF WORK.

LEGEND

- EXIST RIGHT-OF-WAY
- EXIST STORM SEWER
- PROP STORM SEWER
- EXIST CONTOURS
- PROP CONTOURS
- 10" FLEX BASE PROP PAVING
- PROP CONCRETE
- PROP PAVEMENT

RELEASED FOR CONSTRUCTION Date: 2024.02.05 17:09:17 -06'00'

STATE OF TEXAS
PATRICK M. GIBBONS
113697
LICENSED PROFESSIONAL ENGINEER

Date: 2024.02.05 17:08:58 -06'00'

ISSUE RECORD		
NO.	DESCRIPTION	DATE
00	RFC DESIGN	29MAR23
01	NDC 0082	30JUN23
02	NDC 0133	20DEC23

CENTRAL TEXAS REGIONAL MOBILITY AUTHORITY

GREAT HILLS CONSTRUCTORS

PARSONS
TBPE Registration No. F-1481

183 NORTH MOBILITY
SEGMENT 1A
POND LAYOUT
HYMEADOW POND 2D1 (BASIN B)

DESIGNED	FED. RD. DIV. NO.	FEDERAL AID PROJECT NO.	HIGHWAY NO.
KR	6		US 183
DRAWN RG	STATE: TEXAS	DISTRICT: AUSTIN	COUNTY: TRAVIS, WILLIAMSON
CHECKED MM	DRAWING: 1ADRVLT2D1		
APPROVED SB	CONTROL: 0151	SECTION: 06	JOB: 143
	SHEET NO.: 1AWQ014		

User: p0041844 Date: 2/5/2024 Time: 5:05:45 PM Pen Table: 183N_Standard.tbl Plot Config: 183N PDF.pltcfg
File Name: 1A-DRVLT-2D1.dgn

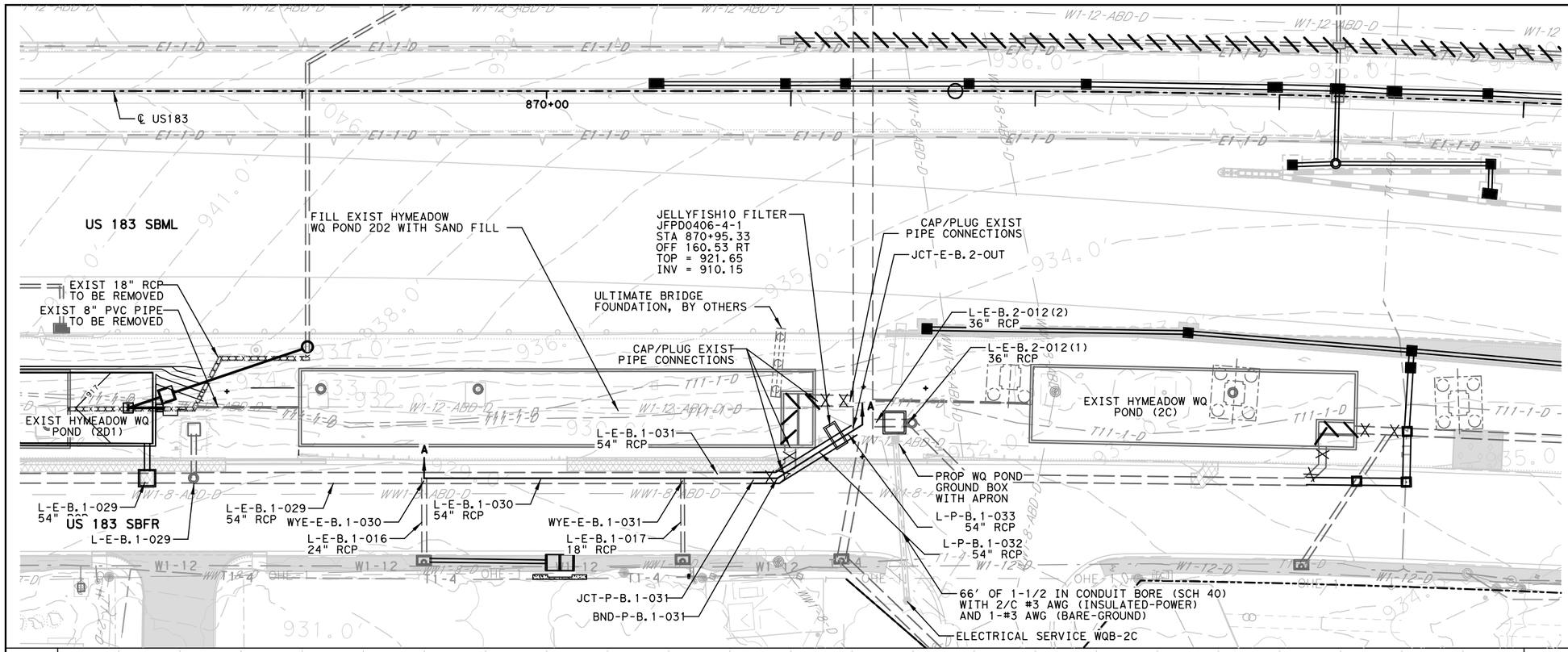

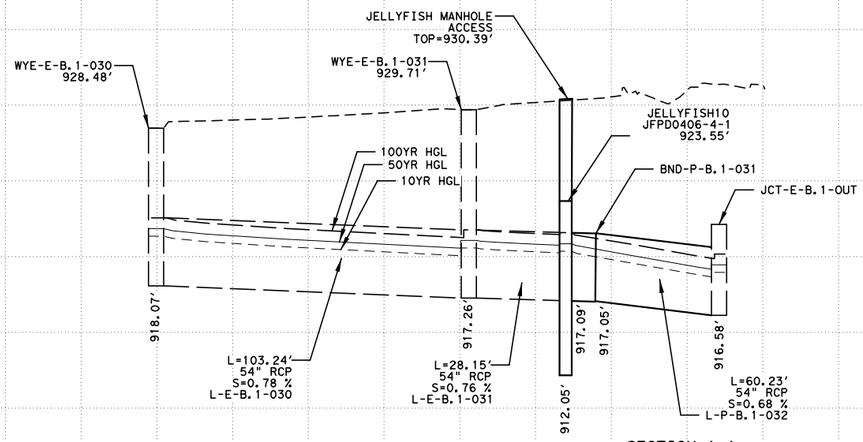

SECTION A-A

02 ENTIRE SHEET

HORIZONTAL SCALE
0' 25' 50'
VERTICAL SCALE
0' 5' 10'

NOTES:
1. ELEVATIONS SHOW HEREON WERE DERIVED FROM AS-BUILT PLANS PROVIDED TO PARSONS.

2. CONTRACTOR SHALL FIELD VERIFY INVERT ELEVATIONS WITHIN THE EXISTING VAULT, SPLITTER BOX OPENINGS, AND UPSTREAM AND DOWNSTREAM CONNECTIONS TO EXISTING CULVERTS AND/OR SEWERS PRIOR TO THE START OF WORK; CONTRACTOR SHALL BE RESPONSIBLE FOR REPORTING ANY DISCREPANCIES BETWEEN FIELD SURVEYED ELEVATIONS AND THE ELEVATIONS SHOWN ON THESE PLANS IMMEDIATELY TO THE PROJECT ENGINEER PRIOR TO THE START OF WORK.

LEGEND

- EXIST RIGHT-OF-WAY
- EXIST STORM SEWER
- PROP STORM SEWER
- EXIST CONTOURS
- PROP CONTOURS
- 10" FLEX BASE PROP PAVING
- PROP CONCRETE
- PROP PAVEMENT

RELEASED FOR CONSTRUCTION 2024.01.25 14:41:27 -06'00'

STATE OF TEXAS
JEREMY HUTCHINS
134720
LICENSED PROFESSIONAL ENGINEER

2024.01.25 14:39:52 -06'00'

ISSUE RECORD

NO.	DESCRIPTION	DATE
00	RFC DESIGN	29MAR23
01	NDC 0082	30JUN23
02	NDC 0133	20DEC23

CENTRAL TEXAS REGIONAL MOBILITY AUTHORITY

GREAT HILLS CONSTRUCTORS

PARSONS
TBPE Registration No. F-1481

183 NORTH MOBILITY
SEGMENT 1A
BASIN LAYOUT
HYMEADOW WATER QUALITY BASIN 2D2 (BASIN B)

DESIGNED	FED. RD. DIV. NO.		FEDERAL AID PROJECT NO.	HIGHWAY NO.
KR	6			US 183
DRAWN	STATE	DISTRICT	COUNTY	DRAWING
RG	TEXAS	AUSTIN	TRAVIS, WILLIAMSON	1ADRVLT2D2
CHECKED	CONTROL	SECTION	JOB	SHEET NO.
MM	0151	06	875+06 143	1AWQ015
APPROVED				
SB				

User: p003330E Date: 1/25/2024 Time: 2:35:06 PM Pen Table: 183N_Standard.tbl Plot Config: 183N PDF.pltcfg
File Name: 1ADRVLT2D2.dgn

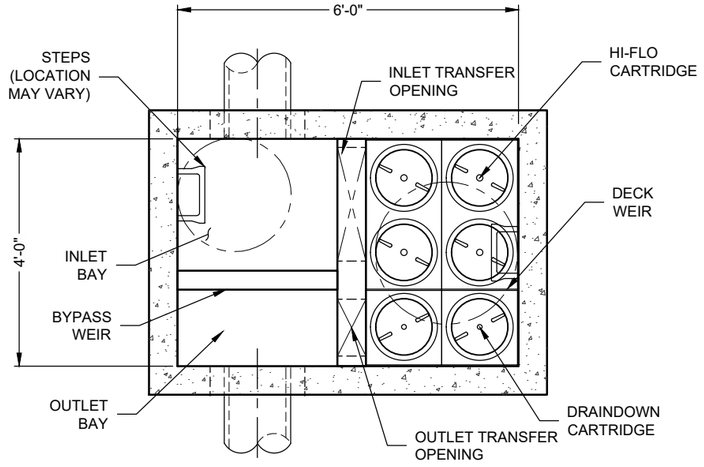

PLAN VIEW

(TOP SLAB NOT SHOWN FOR CLARITY)

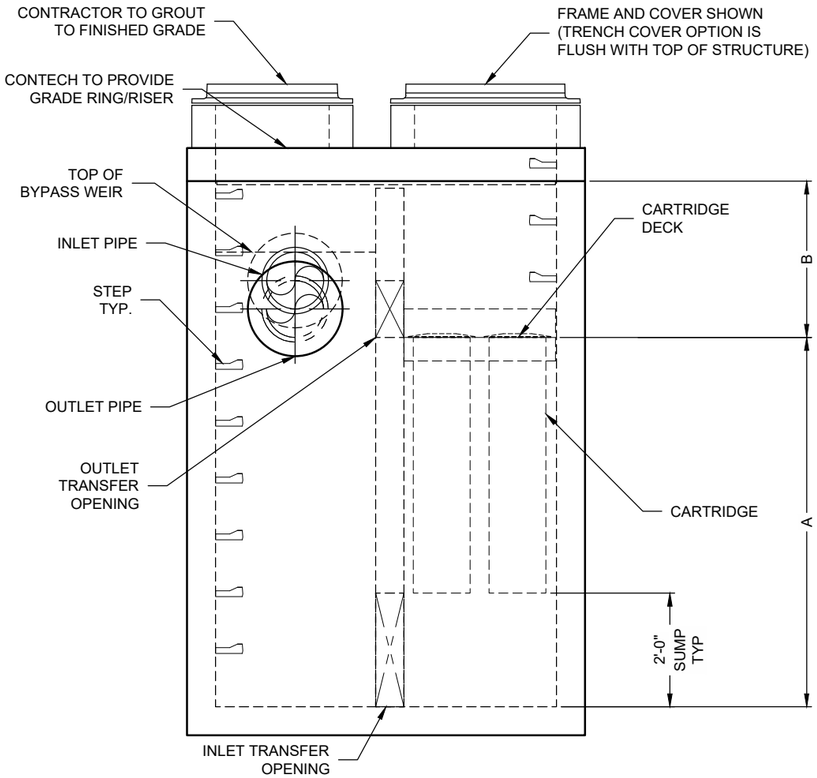

ELEVATION VIEW

Jellyfish Filter

THIS PRODUCT MAY BE PROTECTED BY ONE OR MORE OF THE FOLLOWING: U.S. PATENT NO. 8,287,726; 8,221,618; US 8,123,935; OTHER INTERNATIONAL PATENTS PENDING

JELLYFISH DESIGN NOTES

JELLYFISH TREATMENT CAPACITY IS A FUNCTION OF THE CARTRIDGE LENGTH AND THE NUMBER OF CARTRIDGES. THE STANDARD PEAK DIVERSION STYLE WITH PRECAST TOP SLAB IS SHOWN. ALTERNATE OFFLINE VAULT, CURB INLET OR SHALLOW PIPE INLET OPTIONS ARE AVAILABLE. PEAK CONVEYANCE CAPACITY TO BE DETERMINED BY ENGINEER OF RECORD.

CARTRIDGE SELECTION

CARTRIDGE LENGTH	54"	40"	27"	15"
OUTLET INVERT TO STRUCTURE INVERT (A)	6'-6"	5'-4"	4'-3"	3'-3"
FLOW RATE HIGH-FLO / DRAINDOWN (CFS) (PER CART)	0.178 / 0.089	0.133 / 0.067	0.089 / 0.045	0.049 / 0.025
MAX. TREATMENT (CFS)	0.89	0.67	0.45	0.25
DECK TO INSIDE TOP (MIN) (B)	5'-0"	4'-0"	4'-0"	4'-0"

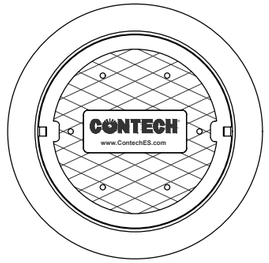

FRAME AND COVER

(DIAMETER VARIES)
N.T.S.

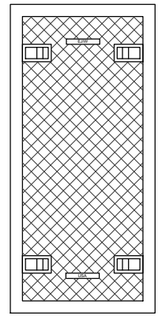

24" TRENCH COVER

N.T.S.

SITE SPECIFIC DATA REQUIREMENTS

STRUCTURE ID	*
WATER QUALITY FLOW RATE (cfs)	*
PEAK FLOW RATE (cfs)	*
RETURN PERIOD OF PEAK FLOW (yrs)	*
# OF CARTRIDGES REQUIRED (HF / DD)	*
CARTRIDGE LENGTH	*

PIPE DATA:	I.E.	MAT'L	DIA	SLOPE %	HGL
INLET #1	*	*	*	*	*
INLET #2	*	*	*	*	*
OUTLET	*	*	*	*	*

SEE GENERAL NOTES 6-7 FOR INLET AND OUTLET HYDRAULIC AND SIZING REQUIREMENTS.

RIM ELEVATION	*

ANTI-FLOTATION BALLAST	WIDTH	HEIGHT
	*	*

NOTES/SPECIAL REQUIREMENTS:

* PER ENGINEER OF RECORD

GENERAL NOTES:

1. CONTECH TO PROVIDE ALL MATERIALS UNLESS NOTED OTHERWISE.
2. FOR SITE SPECIFIC DRAWINGS WITH DETAILED STRUCTURE DIMENSIONS AND WEIGHT, PLEASE CONTACT YOUR CONTECH ENGINEERED SOLUTIONS REPRESENTATIVE. www.ContechES.com
3. JELLYFISH WATER QUALITY STRUCTURE SHALL BE IN ACCORDANCE WITH ALL DESIGN DATA AND INFORMATION CONTAINED IN THIS DRAWING. CONTRACTOR TO CONFIRM STRUCTURE MEETS REQUIREMENTS OF PROJECT.
4. STRUCTURE SHALL MEET AASHTO HS-20 OR PER APPROVING JURISDICTION REQUIREMENTS, WHICHEVER IS MORE STRINGENT. ENGINEER OF RECORD TO CONFIRM ACTUAL GROUNDWATER ELEVATION AND SITE SPECIFIC EARTH COVER REQUIREMENT. TYPICAL CASTINGS SHALL MEET AASHTO M306 LOAD RATING AND BE CAST WITH THE CONTECH LOGO.
5. STRUCTURE SHALL BE PRECAST CONCRETE CONFORMING TO ASTM C-857, ASTM C-918, AND AASHTO LOAD FACTOR DESIGN METHOD.
6. OUTLET PIPE INVERT IS EQUAL TO THE CARTRIDGE DECK ELEVATION.
7. THE OUTLET PIPE DIAMETER FOR NEW INSTALLATIONS IS RECOMMENDED TO BE ONE PIPE SIZE LARGER THAN THE INLET PIPE (WHERE APPLICABLE) AT EQUAL OR GREATER SLOPE.
8. NO PRODUCT SUBSTITUTIONS SHALL BE ACCEPTED UNLESS SUBMITTED 10 DAYS PRIOR TO PROJECT BID DATE, OR AS DIRECTED BY THE ENGINEER OF RECORD.

INSTALLATION NOTES

A. ANY SUB-BASE, BACKFILL DEPTH, AND/OR ANTI-FLOTATION PROVISIONS ARE SITE-SPECIFIC DESIGN CONSIDERATIONS AND SHALL BE SPECIFIED BY ENGINEER OF RECORD.
B. CONTRACTOR TO PROVIDE EQUIPMENT WITH SUFFICIENT LIFTING AND REACH CAPACITY TO LIFT AND SET THE STRUCTURE.
C. CONTRACTOR WILL INSTALL AND LEVEL THE STRUCTURE, SEALING THE JOINTS, LINE ENTRY AND EXIT POINTS (NON-SHRINK GROUT WITH APPROVED WATERSTOP OR FLEXIBLE BOOT).
D. CARTRIDGE INSTALLATION, BY CONTECH, SHALL OCCUR ONLY AFTER SITE HAS BEEN STABILIZED AND THE JELLYFISH UNIT IS CLEAN AND FREE OF DEBRIS. CONTACT CONTECH TO COORDINATE CARTRIDGE INSTALLATION WITH SITE STABILIZATION.

CONTECH ENGINEERED SOLUTIONS LLC
www.ContechES.com
9025 Centre Pointe Dr., Suite 400, West Chester, OH 45069
800-338-1122 513-645-7000 513-645-7993 FAX

JELLYFISH JFPD0406 STANDARD DETAIL PEAK DIVERSION CONFIGURATION

C:\USERS\JOHN.WRIGHTONEDRIVE - THE QUIKRETE COMPANIES\DESKTOP\STANDARD DETAILS\JFPD0406-DTL.DWG 11/15/2022 3:01 PM

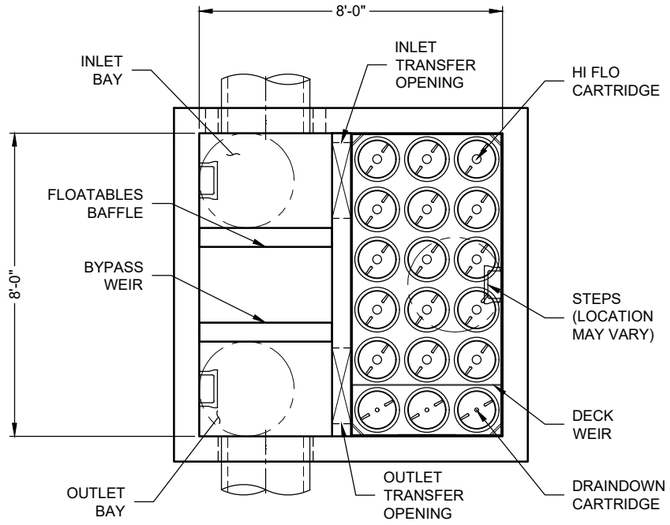

PLAN VIEW

(TOP SLAB NOT SHOWN FOR CLARITY)

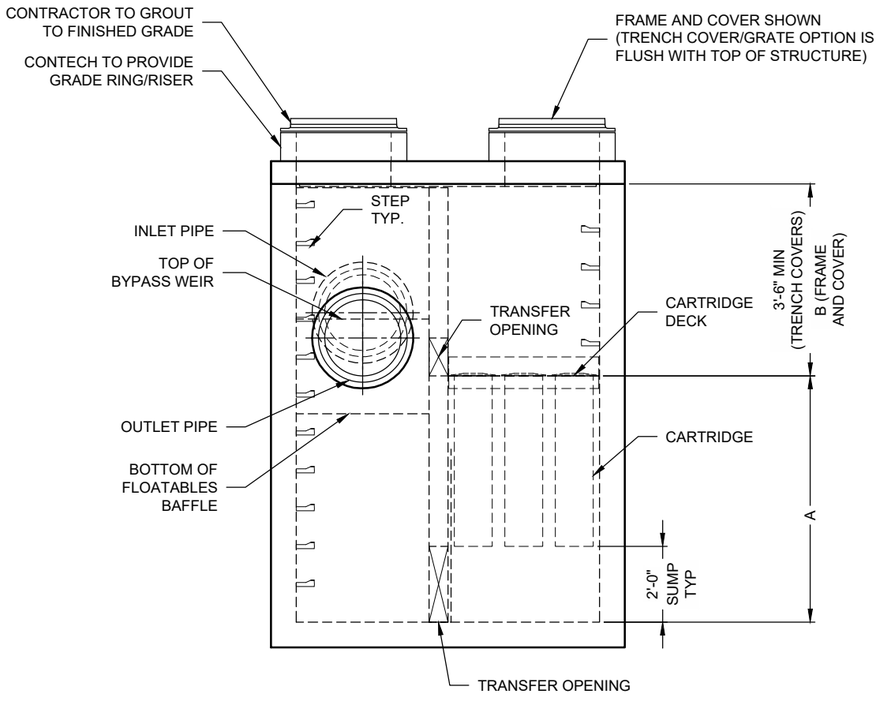

ELEVATION VIEW

JELLYFISH DESIGN NOTES

JELLYFISH TREATMENT CAPACITY IS A FUNCTION OF THE CARTRIDGE LENGTH AND THE NUMBER OF CARTRIDGES. THE STANDARD PEAK DIVERSION STYLE WITH PRECAST TOP SLAB IS SHOWN. ALTERNATE OFFLINE VAULT AND/OR SHALLOW ORIENTATIONS ARE AVAILABLE. PEAK CONVEYANCE CAPACITY TO BE DETERMINED BY ENGINEER OF RECORD

CARTRIDGE SELECTION

CARTRIDGE LENGTH	54"	40"	27"	15"
OUTLET INVERT TO STRUCTURE INVERT (A)	6'-6"	5'-4"	4'-3"	3'-3"
FLOW RATE HI-FLO / DRAINDOWN (CFS) (PER CART)	0.178 / 0.089	0.133 / 0.067	0.089 / 0.045	0.049 / 0.025
MAX. TREATMENT (CFS)	2.94	2.21	1.47	0.81
DECK TO INSIDE TOP (MIN) (B)	5.00	4.00	4.00	4.00

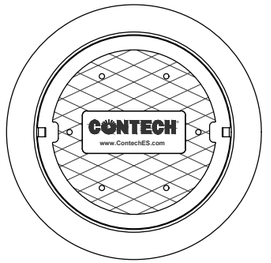

FRAME AND COVER

(DIAMETER VARIES)

N.T.S.

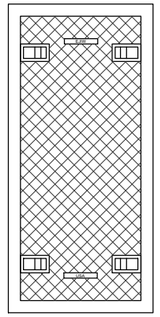

24"

TRENCH COVER

(LENGTH VARIES)

N.T.S.

SITE SPECIFIC DATA REQUIREMENTS

STRUCTURE ID	*
WATER QUALITY FLOW RATE (cfs)	*
PEAK FLOW RATE (cfs)	*
RETURN PERIOD OF PEAK FLOW (yrs)	*
# OF CARTRIDGES REQUIRED (HF / DD)	*
CARTRIDGE LENGTH	*

PIPE DATA:	I.E.	MAT'L	DIA	SLOPE %	HGL
INLET #1	*	*	*	*	*
INLET #2	*	*	*	*	*
OUTLET	*	*	*	*	*

SEE GENERAL NOTES 6-7 FOR INLET AND OUTLET HYDRAULIC AND SIZING REQUIREMENTS.

RIM ELEVATION	*

ANTI-FLOTATION BALLAST	WIDTH	HEIGHT
	*	*

NOTES/SPECIAL REQUIREMENTS:

* PER ENGINEER OF RECORD

GENERAL NOTES:

1. CONTECH TO PROVIDE ALL MATERIALS UNLESS NOTED OTHERWISE.
2. FOR SITE SPECIFIC DRAWINGS WITH DETAILED STRUCTURE DIMENSIONS AND WEIGHT, PLEASE CONTACT YOUR CONTECH ENGINEERED SOLUTIONS REPRESENTATIVE. www.ContechES.com
3. JELLYFISH WATER QUALITY STRUCTURE SHALL BE IN ACCORDANCE WITH ALL DESIGN DATA AND INFORMATION CONTAINED IN THIS DRAWING. CONTRACTOR TO CONFIRM STRUCTURE MEETS REQUIREMENTS OF PROJECT.
4. STRUCTURE SHALL MEET AASHTO HS-20 OR PER APPROVING JURISDICTION REQUIREMENTS, WHICHEVER IS MORE STRINGENT, ASSUMING EARTH COVER OF 0' - 10', AND GROUNDWATER ELEVATION AT, OR BELOW, THE OUTLET PIPE INVERT ELEVATION. ENGINEER OF RECORD TO CONFIRM ACTUAL GROUNDWATER ELEVATION. CASTINGS SHALL MEET AASHTO M306 LOAD RATING AND BE CAST WITH THE CONTECH LOGO.
5. STRUCTURE SHALL BE PRECAST CONCRETE CONFORMING TO ASTM C-857, ASTM C-918, AND AASHTO LOAD FACTOR DESIGN METHOD.
6. OUTLET PIPE INVERT IS EQUAL TO THE CARTRIDGE DECK ELEVATION.
7. THE OUTLET PIPE DIAMETER FOR NEW INSTALLATIONS IS RECOMMENDED TO BE ONE PIPE SIZE LARGER THAN THE INLET PIPE AT EQUAL OR GREATER SLOPE.
8. NO PRODUCT SUBSTITUTIONS SHALL BE ACCEPTED UNLESS SUBMITTED 10 DAYS PRIOR TO PROJECT BID DATE, OR AS DIRECTED BY THE ENGINEER OF RECORD.

INSTALLATION NOTES

A. ANY SUB-BASE, BACKFILL DEPTH, AND/OR ANTI-FLOTATION PROVISIONS ARE SITE-SPECIFIC DESIGN CONSIDERATIONS AND SHALL BE SPECIFIED BY ENGINEER OF RECORD.
B. CONTRACTOR TO PROVIDE EQUIPMENT WITH SUFFICIENT LIFTING AND REACH CAPACITY TO LIFT AND SET THE STRUCTURE.
C. CONTRACTOR WILL INSTALL AND LEVEL THE STRUCTURE, SEALING THE JOINTS, LINE ENTRY AND EXIT POINTS (NON-SHRINK GROUT WITH APPROVED WATERSTOP OR FLEXIBLE BOOT).
D. CARTRIDGE INSTALLATION, BY CONTECH, SHALL OCCUR ONLY AFTER SITE HAS BEEN STABILIZED AND THE JELLYFISH UNIT IS CLEAN AND FREE OF DEBRIS. CONTACT CONTECH TO COORDINATE CARTRIDGE INSTALLATION WITH SITE STABILIZATION.

Jellyfish Filter

THIS PRODUCT MAY BE PROTECTED BY ONE OR MORE OF THE FOLLOWING: U.S. PATENT NO. 8,287,726; 8,221,618; US 8,123,935; OTHER INTERNATIONAL PATENTS PENDING

CONTECH ENGINEERED SOLUTIONS LLC
www.ContechES.com
9025 Centre Pointe Dr., Suite 400, West Chester, OH 45069
800-338-1122 513-645-7000 513-645-7993 FAX

JELLYFISH JFPD0808 STANDARD DETAIL PEAK DIVERSION CONFIGURATION

I:\COMMON\CAD\TREATMENT\13 JELLYFISH FILTER\40 STANDARD DRAWINGS\JFPD\DWG\JFPD0808-DTL NEW.DWG 1/29/2018 10:50 AM

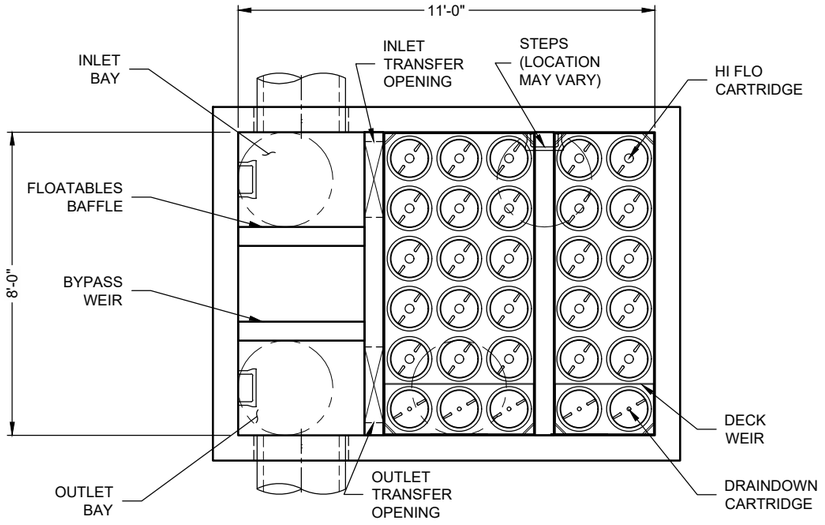

PLAN VIEW

(TOP SLAB NOT SHOWN FOR CLARITY)

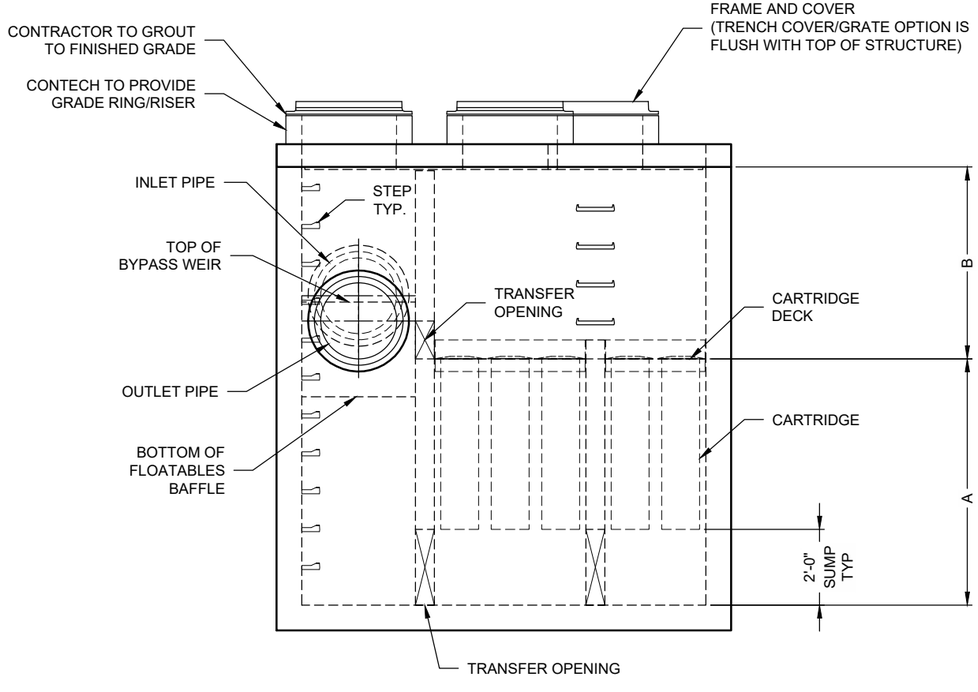

ELEVATION VIEW

JELLYFISH DESIGN NOTES

JELLYFISH TREATMENT CAPACITY IS A FUNCTION OF THE CARTRIDGE LENGTH AND THE NUMBER OF CARTRIDGES. THE STANDARD PEAK DIVERSION STYLE WITH PRECAST TOP SLAB IS SHOWN. ALTERNATE OFFLINE VAULT AND/OR SHALLOW ORIENTATIONS ARE AVAILABLE. PEAK CONVEYANCE CAPACITY TO BE DETERMINED BY ENGINEER OF RECORD

CARTRIDGE SELECTION

CARTRIDGE LENGTH	54"	40"	27"	15"
OUTLET INVERT TO STRUCTURE INVERT (A)	6'-6"	5'-4"	4'-3"	3'-3"
FLOW RATE HIGH-FLO / DRAINDOWN (CFS) (PER CART)	0.178 / 0.089	0.133 / 0.067	0.089 / 0.045	0.049 / 0.025
MAX. TREATMENT (CFS)	4.90	3.67	2.45	1.36
DECK TO INSIDE TOP (MIN) (B)	5.00	4.00	4.00	4.00

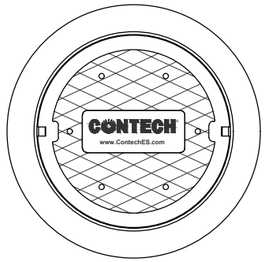

FRAME AND COVER

(DIAMETER VARIES)
N.T.S.

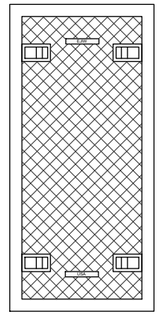

24" TRENCH COVER

(LENGTH VARIES)
N.T.S.

SITE SPECIFIC DATA REQUIREMENTS

STRUCTURE ID	*
WATER QUALITY FLOW RATE (cfs)	*
PEAK FLOW RATE (cfs)	*
RETURN PERIOD OF PEAK FLOW (yrs)	*
# OF CARTRIDGES REQUIRED (HF / DD)	*
CARTRIDGE LENGTH	*

PIPE DATA:	I.E.	MAT'L	DIA	SLOPE %	HGL
INLET #1	*	*	*	*	*
INLET #2	*	*	*	*	*
OUTLET	*	*	*	*	*

SEE GENERAL NOTES 6-7 FOR INLET AND OUTLET HYDRAULIC AND SIZING REQUIREMENTS.

RIM ELEVATION	*

ANTI-FLOTATION BALLAST	WIDTH	HEIGHT
	*	*

NOTES/SPECIAL REQUIREMENTS:

* PER ENGINEER OF RECORD

GENERAL NOTES:

1. CONTECH TO PROVIDE ALL MATERIALS UNLESS NOTED OTHERWISE.
2. FOR SITE SPECIFIC DRAWINGS WITH DETAILED STRUCTURE DIMENSIONS AND WEIGHT, PLEASE CONTACT YOUR CONTECH ENGINEERED SOLUTIONS REPRESENTATIVE. www.ContechES.com
3. JELLYFISH WATER QUALITY STRUCTURE SHALL BE IN ACCORDANCE WITH ALL DESIGN DATA AND INFORMATION CONTAINED IN THIS DRAWING. CONTRACTOR TO CONFIRM STRUCTURE MEETS REQUIREMENTS OF PROJECT.
4. STRUCTURE SHALL MEET AASHTO HS-20 OR PER APPROVING JURISDICTION REQUIREMENTS, WHICHEVER IS MORE STRINGENT, ASSUMING EARTH COVER OF 0' - 10', AND GROUNDWATER ELEVATION AT, OR BELOW, THE OUTLET PIPE INVERT ELEVATION. ENGINEER OF RECORD TO CONFIRM ACTUAL GROUNDWATER ELEVATION. CASTINGS SHALL MEET AASHTO M306 LOAD RATING AND BE CAST WITH THE CONTECH LOGO.
5. STRUCTURE SHALL BE PRECAST CONCRETE CONFORMING TO ASTM C-857, ASTM C-918, AND AASHTO LOAD FACTOR DESIGN METHOD.
6. OUTLET PIPE INVERT IS EQUAL TO THE CARTRIDGE DECK ELEVATION.
7. THE OUTLET PIPE DIAMETER FOR NEW INSTALLATIONS IS RECOMMENDED TO BE ONE PIPE SIZE LARGER THAN THE INLET PIPE AT EQUAL OR GREATER SLOPE.
8. NO PRODUCT SUBSTITUTIONS SHALL BE ACCEPTED UNLESS SUBMITTED 10 DAYS PRIOR TO PROJECT BID DATE, OR AS DIRECTED BY THE ENGINEER OF RECORD.

INSTALLATION NOTES

A. ANY SUB-BASE, BACKFILL DEPTH, AND/OR ANTI-FLOTATION PROVISIONS ARE SITE-SPECIFIC DESIGN CONSIDERATIONS AND SHALL BE SPECIFIED BY ENGINEER OF RECORD.
B. CONTRACTOR TO PROVIDE EQUIPMENT WITH SUFFICIENT LIFTING AND REACH CAPACITY TO LIFT AND SET THE STRUCTURE.
C. CONTRACTOR WILL INSTALL AND LEVEL THE STRUCTURE, SEALING THE JOINTS, LINE ENTRY AND EXIT POINTS (NON-SHRINK GROUT WITH APPROVED WATERSTOP OR FLEXIBLE BOOT).
D. CARTRIDGE INSTALLATION, BY CONTECH, SHALL OCCUR ONLY AFTER SITE HAS BEEN STABILIZED AND THE JELLYFISH UNIT IS CLEAN AND FREE OF DEBRIS. CONTACT CONTECH TO COORDINATE CARTRIDGE INSTALLATION WITH SITE STABILIZATION.

Jellyfish Filter

THIS PRODUCT MAY BE PROTECTED BY ONE OR MORE OF THE FOLLOWING: U.S. PATENT NO. 8,287,726; 8,221,618; US 8,123,935; OTHER INTERNATIONAL PATENTS PENDING

CONTECH ENGINEERED SOLUTIONS LLC
www.ContechES.com
9025 Centre Pointe Dr., Suite 400, West Chester, OH 45069
800-338-1122 513-645-7000 513-645-7993 FAX

JELLYFISH JFPD0811 STANDARD DETAIL PEAK DIVERSION CONFIGURATION

C:\USERS\SOKOLIONEDRIVE - CONTECH ENGINEERED SOLUTIONS\REGIONAL INITITIVES AND PROJECTS\JFPD0811-DTL.DWG 6/26/2018 8:16 AM

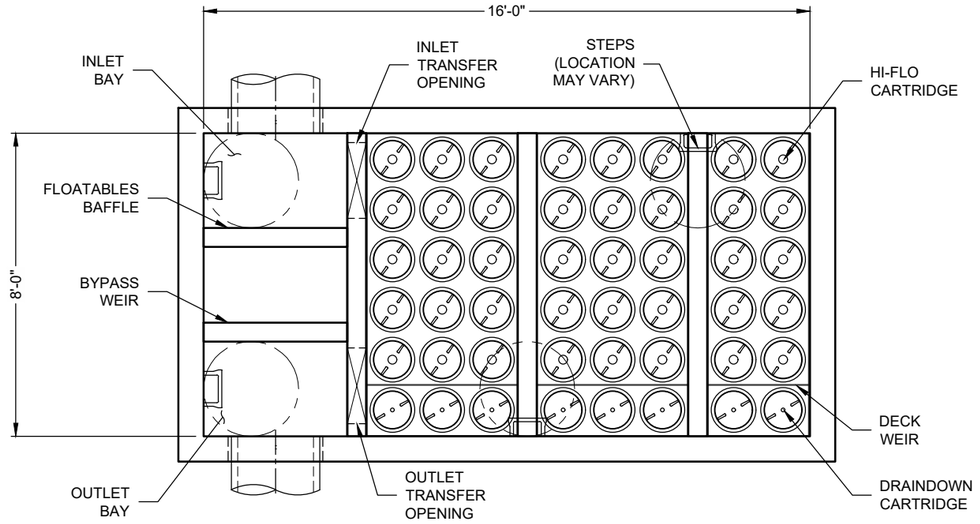

PLAN VIEW

(TOP SLAB NOT SHOWN FOR CLARITY)

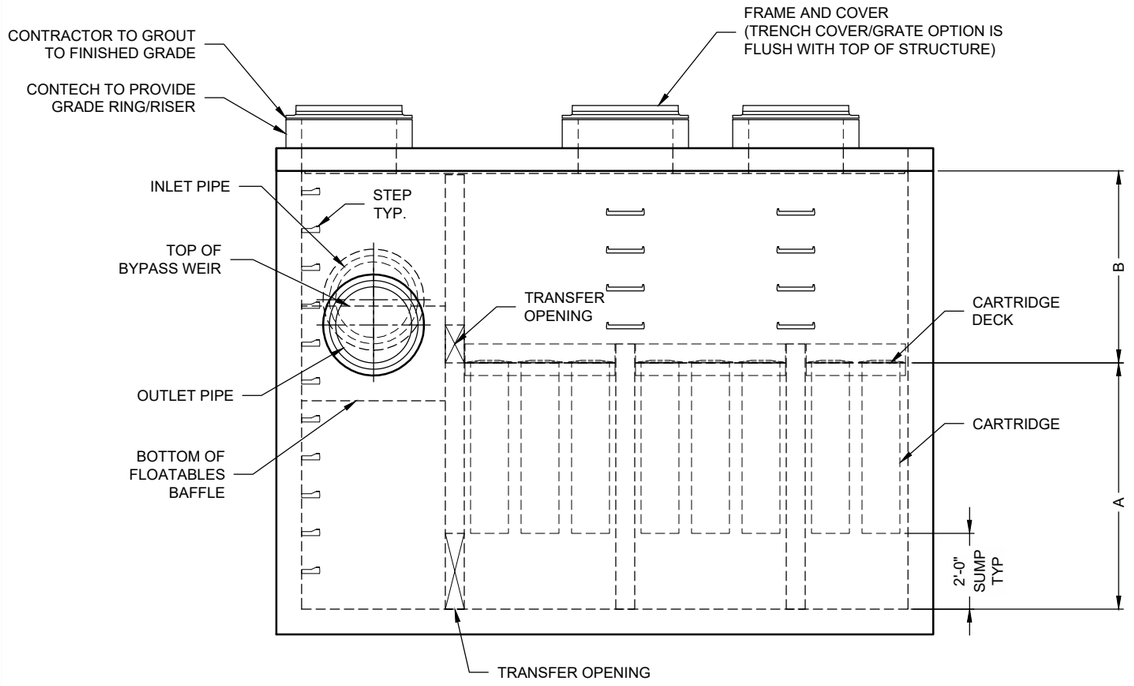

ELEVATION VIEW

JELLYFISH DESIGN NOTES

JELLYFISH TREATMENT CAPACITY IS A FUNCTION OF THE CARTRIDGE LENGTH AND THE NUMBER OF CARTRIDGES. THE STANDARD PEAK DIVERSION STYLE WITH PRECAST TOP SLAB IS SHOWN. ALTERNATE OFFLINE VAULT AND/OR SHALLOW ORIENTATIONS ARE AVAILABLE. PEAK CONVEYANCE CAPACITY TO BE DETERMINED BY ENGINEER OF RECORD

CARTRIDGE SELECTION

CARTRIDGE LENGTH	54"	40"	27"	15"
OUTLET INVERT TO STRUCTURE INVERT (A)	6'-6"	5'-4"	4'-3"	3'-3"
FLOW RATE HI-FLO / DRAINDOWN (CFS) (PER CART)	0.178 / 0.089	0.133 / 0.067	0.089 / 0.045	0.049 / 0.025
MAX. TREATMENT (CFS)	7.84	5.88	3.92	2.16
DECK TO INSIDE TOP (MIN) (B)	5.00	4.00	4.00	4.00

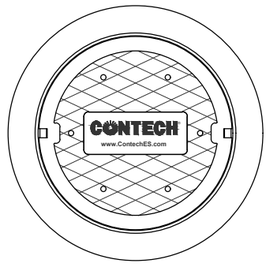

FRAME AND COVER

(DIAMETER VARIES)
N.T.S.

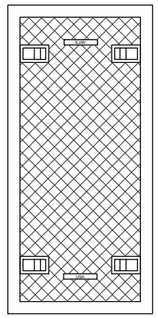

24" TRENCH COVER

(LENGTH VARIES)
N.T.S.

SITE SPECIFIC DATA REQUIREMENTS

STRUCTURE ID	*
WATER QUALITY FLOW RATE (cfs)	*
PEAK FLOW RATE (cfs)	*
RETURN PERIOD OF PEAK FLOW (yrs)	*
# OF CARTRIDGES REQUIRED (HF / DD)	*
CARTRIDGE LENGTH	*

PIPE DATA:	I.E.	MAT'L	DIA	SLOPE %	HGL
INLET #1	*	*	*	*	*
INLET #2	*	*	*	*	*
OUTLET	*	*	*	*	*

SEE GENERAL NOTES 6-7 FOR INLET AND OUTLET HYDRAULIC AND SIZING REQUIREMENTS.

RIM ELEVATION	*

ANTI-FLOTATION BALLAST	WIDTH	HEIGHT
	*	*

NOTES/SPECIAL REQUIREMENTS:

* PER ENGINEER OF RECORD

GENERAL NOTES:

1. CONTECH TO PROVIDE ALL MATERIALS UNLESS NOTED OTHERWISE.
2. FOR SITE SPECIFIC DRAWINGS WITH DETAILED STRUCTURE DIMENSIONS AND WEIGHT, PLEASE CONTACT YOUR CONTECH ENGINEERED SOLUTIONS REPRESENTATIVE. www.ContechES.com
3. JELLYFISH WATER QUALITY STRUCTURE SHALL BE IN ACCORDANCE WITH ALL DESIGN DATA AND INFORMATION CONTAINED IN THIS DRAWING. CONTRACTOR TO CONFIRM STRUCTURE MEETS REQUIREMENTS OF PROJECT.
4. STRUCTURE SHALL MEET AASHTO HS-20 OR PER APPROVING JURISDICTION REQUIREMENTS, WHICHEVER IS MORE STRINGENT, ASSUMING EARTH COVER OF 0' - 10', AND GROUNDWATER ELEVATION AT, OR BELOW, THE OUTLET PIPE INVERT ELEVATION. ENGINEER OF RECORD TO CONFIRM ACTUAL GROUNDWATER ELEVATION. CASTINGS SHALL MEET AASHTO M306 LOAD RATING AND BE CAST WITH THE CONTECH LOGO.
5. STRUCTURE SHALL BE PRECAST CONCRETE CONFORMING TO ASTM C-857, ASTM C-918, AND AASHTO LOAD FACTOR DESIGN METHOD.
6. OUTLET PIPE INVERT IS EQUAL TO THE CARTRIDGE DECK ELEVATION.
7. THE OUTLET PIPE DIAMETER FOR NEW INSTALLATIONS IS RECOMMENDED TO BE ONE PIPE SIZE LARGER THAN THE INLET PIPE AT EQUAL OR GREATER SLOPE.
8. NO PRODUCT SUBSTITUTIONS SHALL BE ACCEPTED UNLESS SUBMITTED 10 DAYS PRIOR TO PROJECT BID DATE, OR AS DIRECTED BY THE ENGINEER OF RECORD.

INSTALLATION NOTES

A. ANY SUB-BASE, BACKFILL DEPTH, AND/OR ANTI-FLOTATION PROVISIONS ARE SITE-SPECIFIC DESIGN CONSIDERATIONS AND SHALL BE SPECIFIED BY ENGINEER OF RECORD.
B. CONTRACTOR TO PROVIDE EQUIPMENT WITH SUFFICIENT LIFTING AND REACH CAPACITY TO LIFT AND SET THE STRUCTURE.
C. CONTRACTOR WILL INSTALL AND LEVEL THE STRUCTURE, SEALING THE JOINTS, LINE ENTRY AND EXIT POINTS (NON-SHRINK GROUT WITH APPROVED WATERSTOP OR FLEXIBLE BOOT).
D. CARTRIDGE INSTALLATION, BY CONTECH, SHALL OCCUR ONLY AFTER SITE HAS BEEN STABILIZED AND THE JELLYFISH UNIT IS CLEAN AND FREE OF DEBRIS. CONTACT CONTECH TO COORDINATE CARTRIDGE INSTALLATION WITH SITE STABILIZATION.

Jellyfish Filter

THIS PRODUCT MAY BE PROTECTED BY ONE OR MORE OF THE FOLLOWING: U.S. PATENT NO. 8,287,726; 8,221,618; US 8,123,935; OTHER INTERNATIONAL PATENTS PENDING

CONTECH ENGINEERED SOLUTIONS LLC
www.ContechES.com
9025 Centre Pointe Dr., Suite 400, West Chester, OH 45069
800-338-1122 513-645-7000 513-645-7993 FAX

JELLYFISH JFPD0816 STANDARD DETAIL PEAK DIVERSION CONFIGURATION

I:\COMMON\CAD\TREATMENT\13 JELLYFISH FILTER\40 STANDARD DRAWINGS\JFPD\DWG\JFPD0816-DTL NEW.DWG 1/29/2018 11:11 AM

US 183 North Mobility Project

LAKE CREEK WATERSHED

SEGMENT 1A

WATER POLLUTION ABATEMENT PLAN

WATER QUALITY ANALYSIS AND DESIGN

Revision No: 01

For:

Central Texas Regional Mobility Authority

A regional mobility authority operating pursuant to Texas Transportation Code Chapter 370

3300 N. IH-35 Suite 300

Austin, TX 78705

Client Project # 20183N22701C

Submitted By:

Great Hills Constructors

a joint venture between Archer Western Construction, LLC and

Sundt Construction, Inc.

9430 Research Blvd

Building 4, Suite 400

Austin, TX 78759

STATE OF TEXAS
PATRICK M. GIBBONS
113697
LICENSED PROFESSIONAL ENGINEER

Patrick Gibbons

Digitally signed by Patrick Gibbons
Date: 2024.01.13 10:43:10 -06'00'

Report Revision Table

Revision	Date	Description of Changes
00	03/29/23	RFC DESIGN SUBMITTAL
01	01/04/24	NDC-133

Table of Contents

Report Revision Table i
1 INTRODUCTION 3
2 PROJECT DESCRIPTION 3
3 DESIGN CRITERIA 4
3.1 TECHNICAL PROVISIONS DESIGN CRITIERIA 4
3.1.1 WQ REQUIREMENTS 4
3.1.2 HYDROLOGIC AND HYDRAULIC REQUIREMENTS 6
3.2 TCEQ EDWARDS AQUIFER PROTECTION PROGRAM 7
4 LAKE CREEK WATERSHED 8
4.1 BASIN CHARACTERISTICS 10
4.1.1 Basin A 10
4.1.2 Basin B 11
4.1.3 Basin C 11
4.1.4 Basin D 12
5 TSS REMOVAL AND BMP SIZING CALCULATIONS 13
5.1 HISTORICAL METHOD FOR CALCUATING BMP'S 13
5.2 HISTORICAL WPAP PERMITS 14
5.3 EXISTING BMP CHARACTERISTICS PER BASIN 15
5.3.1 Basin A 15
5.3.2 Basin B 15
5.3.3 Basin C 16
5.3.4 Basin D 17
5.4 TSS REMOVAL AND BMP SIZING CALCULATIONS 18
5.4.1 1987 Baseline Impervious Conditions 19
5.4.2 Post Development Impervious 21
5.4.3 TCEQ TSS Load Removal 22
6 PROPOSED BMP STRUCTURES 23

6.1 Batch Detention Basins Design Criteria 23
6.2 BASIN A 28
6.3 BASIN B 28
6.4 BASIN C 29
6.5 BASIN D 29
7 HYDROLOGIC AND HYDRAULIC CALCULATIONS 30
8 CONCLUSION 30
9 REFERENCES 32

APPENDICES

A. EXHIBIT C – ATTACHMENT 15-1 – IMPACT ASSESSMENT EVALUATION REQUIREMENTS
B. DESIGN CRITERIA SUMMARY
C. OVERALL LAKE CREEK WATERSHED MAP
D. BASIN MAP
E. PROPOSED PROJECT IMPERVIOUS AREA MAPS
F. TCEQ TSS LOAD REMOVAL CALCULATIONS
G. WATER QUALITY STRUCTURE PLAN AND PROFILE
H. WATER QUALITY OUTLET CONTROL SIZING CALCULATIONS
I. HISTORICAL WPAP PERMITS
J. HISTORICAL AS-BUILTS
K. MEETING MINUTES

1 INTRODUCTION

The purpose of this report is to show compliance with the Technical Provisions for Development of the US 183 North Mobility Project, Project No. 20183N22701C, Central Texas Regional Mobility Authority for the analysis and design of the project's water quality treatment plan.

This report presents analysis of water quality treatment and impacts from the US 183 North Mobility Project corridor within the Lake Creek Watershed located within Williamson County, Texas. Procedures defined in the Project's Technical Provisions, and the Texas Commission on Environmental Quality (TCEQ) guidelines were followed to perform the analysis to demonstrate that no significant adverse impacts will occur to the Edwards Aquifer (Aquifer) and areas downstream of the Project corridor limits.

2 PROJECT DESCRIPTION

The base scope of the Project includes the construction of four express lanes (two in each direction) and widening of the existing United States Highway (US) 183N as required to bring the total number of general-purpose lanes to four in each direction. The Project also includes the addition of direct connector ramps providing access between the new express lanes on US 183N and the existing express lanes on MoPac, new shared-use paths, new sidewalks, cross-street connections for bicycles/pedestrians along US 183N, and other improvements and widening necessary for the improvements.

A Limits of Work Map can be found in the Figure 1 to the right.

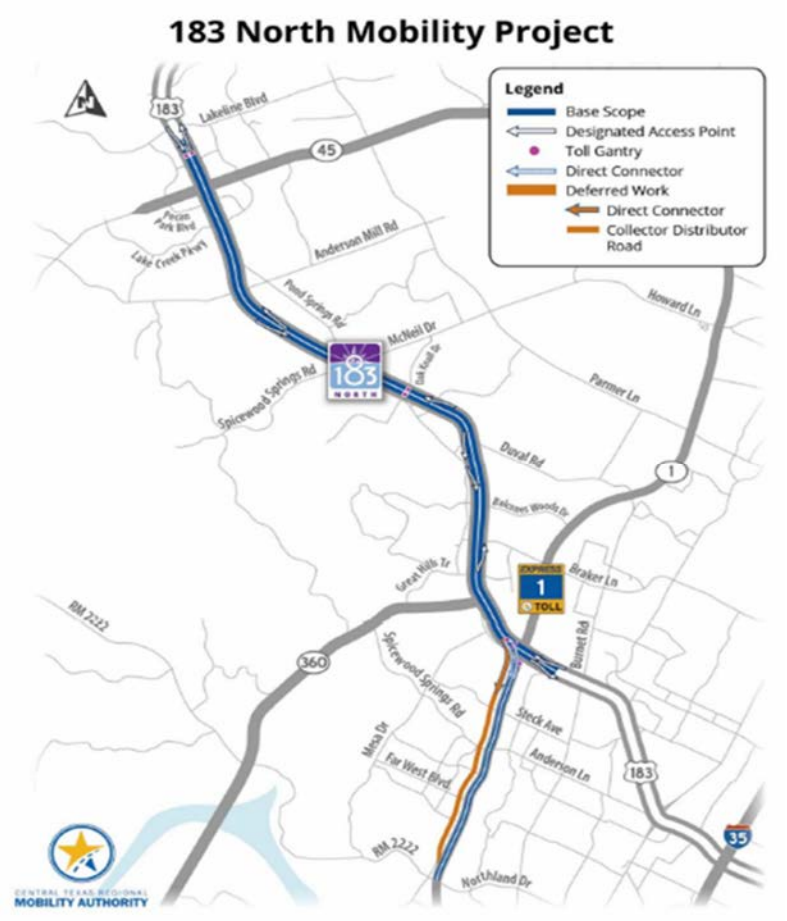

Figure 1. Limits of Work Map

3 DESIGN CRITERIA

3.1 TECHNICAL PROVISIONS DESIGN CRITIERIA

Exhibit C – Technical Provisions, Chapter 9 paragraph 1 states "The DB contractor shall be responsible for environmental compliance in accordance with the requirements identified in this Technical Provisions". This report focuses on the Water Quality criteria for the Project, specifically the design of Water Quality Facilities to meet the criteria of the TECQ Water Pollution Abatement Plan (WPAP).

Exhibit C – Technical Provisions, Chapter 15 paragraph 1 states "*The DB Contractor shall be responsible for providing drainage per the Project in accordance with the requirements identified in this Technical Provision 15 and Exhibit C – Attachment 15-1 Impact Assessment Evaluation Requirements.*"

Drainage design is included within the Segment 1A Drainage Report.

See Appendix B for the Overall Design Criteria Summary which has been comprised of relevant criteria from the Technical Provisions, the TxDOT Hydraulic Design Manual and the TCEQ guidelines.

3.1.1 WQ REQUIREMENTS

Section 9.3.12 of the Technical Provisions states *"The DB Contractor shall complete and implement a TCEQ-approved WPAP, which would authorize discharges over the Edwards Aquifer recharge zone from the Project during and after construction. The DB Contractor shall prepare and submit the WPAP to the Mobility Authority and TCEQ for review and approval prior to commencement of construction. In addition to temporary water quality BMPs, such as those referred to above, the WPAP will identify permanent water quality controls to be implemented with the Project. Except in the area between Hunters Chase and McNeil Drive, the permanent controls will be designed to achieve at least an 80 percent reduction in the increased Total Suspended Solids load discharging from the improved facility. In the area between Hunters Chase and McNeil Drive, controls will be designed to achieve at least an 85 percent reduction. The DB Contractor has the option to meet the Edwards Aquifer Rules requirements through multiple WPAPs rather than a single WPAP for the entire Project.*"

Specific TCEQ permit requirements are discussed in item 3.2 of this report.

Section 15.7.1 of the Technical Provisions states, "*All water quality basins shall be batch detention unless approved by the Mobility Authority.* Upon completion of final design, the Mobility Authority has approved use of Jellyfish Filter Wet Vault Engineered Stormwater Quality Treatment Technology, Wet Basins, as well as batch detention water quality systems as described later in this report.

Section 15.7.1 also states *Water quality treatment calculations shall be performed in accordance with TCEQ requirements, unless otherwise noted. TCEQ policy is to count impervious cover both on top of and*

under bridges, overpasses, and underpasses. Percentage Total Suspended Solids (TSS) Annual load removals described in Attachment 15-1 Impact Assessment Evaluation Requirements are environmental commitments. However, the Project shall achieve no net increase in TSS annual loading from 1987 baseline impervious cover to Ultimate Design impervious cover. These baselines acknowledge the previous impervious cover permitted by TCEQ without TSS treatment. The Ultimate Design impervious cover (referred to as Ultimate Post Project impervious cover), excludes the RM620/SH 45 direct connectors and associated improvements. No net increase shall be assessed at each Point of Interest." Other watersheds affected by the project including the Rattan Creek, Shoal Creek, and Bull Creek watersheds use the 1992 and 1999 baseline impervious cover. The project outfalls associated with the project within the Lake Creek watershed use the 1987 baseline impervious cover. Further clarification of the language in Section 15.7.1, in particular the exclusion of RM620/ SH45 direct connectors and associated improvements, results in the two exhibits below that define the Technical Provisions requirements for the Ultimate Post Project impervious cover.

At the RM620 / SH 45 direct connectors Ultimate Post Project design the impervious cover will not be treated for water quality. The water quality structures will be designed so there is no future conflict with the Ultimate Post-Project overpass structure. Figure 2 below shows the Ultimate design at the RM 620/US 183N Interchange.

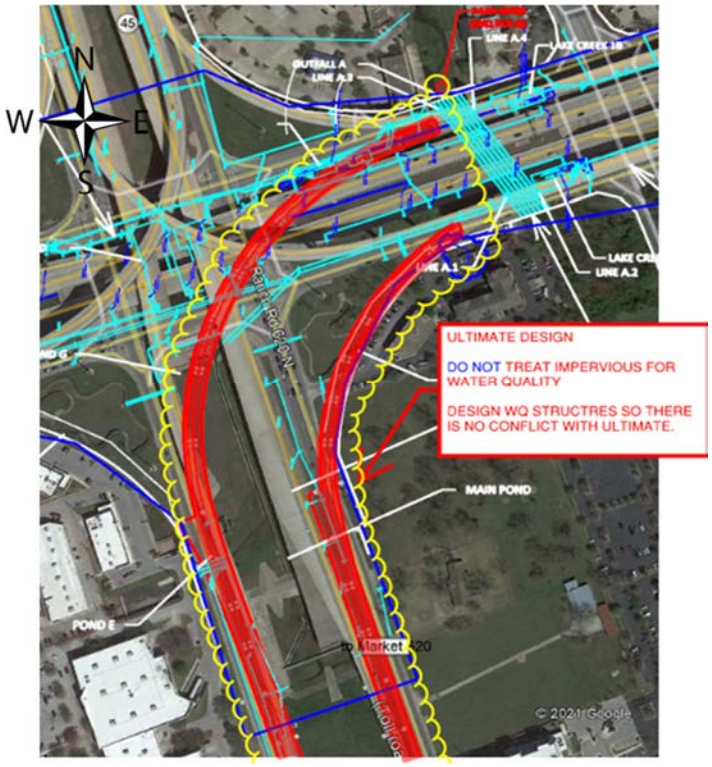

Figure 2. Ultimate Design at the RM620/US 183 Interchange

Along US 183N between Hymeadow Drive to Pond Springs Road, the Ultimate Post-Project condition has future direct connectors and wishbone ramps crossing the mainlanes as shown in figure 3. This Ultimate design will be treated for water quality and the water quality structures will be designed so there is no conflict with the ultimate condition.

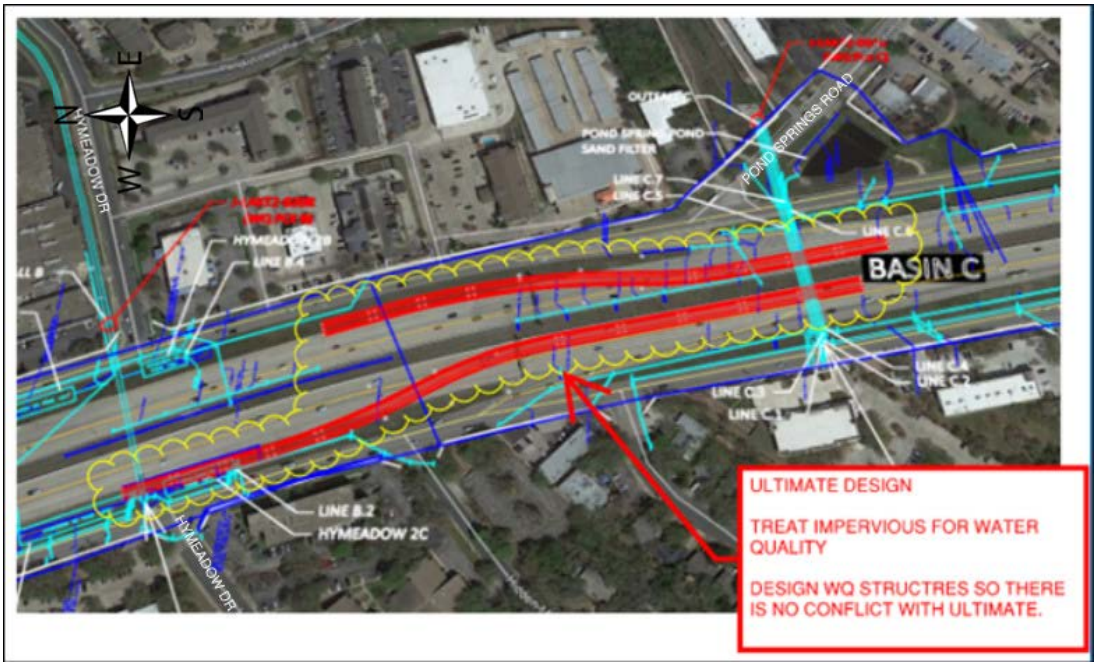

Figure 3. Ultimate Design Where Project Connects Back into Main Lines

3.1.2 HYDROLOGIC AND HYDRAULIC REQUIREMENTS

Section 15.3.1 of the Technical Provisions states "*Adverse Impacts. The DB Contractor shall evaluate all features of the roadway facility and confirm no adverse impacts to adjacent and surrounding properties, both upstream and downstream of the Project for the 2-, 10-, 25-, 50-, and 100-year frequency events. A baseline of existing conditions will be made and any changes to the existing conditions will be compared to the baseline existing conditions in order to evaluate adverse impacts. Additionally, the Project drainage and stormwater management system shall conform to the criteria specified in Exhibit C - Attachment 15-1 – Impact Assessment Evaluation Requirements.*" See Appendix A for a list of these requirements.

Hydrologic and Hydraulic calculations are included within the Segment 1A Drainage Report.

3.2 TCEQ EDWARDS AQUIFER PROTECTION PROGRAM

The Edwards Aquifer (Aquifer) is an artesian aquifer that supplies drinking water for over two million people. It is also a water supply for agriculture and industry in the Aquifers region. The Texas Commission on Environmental Quality (TCEQ) has set up an Edwards Aquifer Program to regulate activities that have potential to pollute the Aquifer. The 183 North Mobility Project is partially located within the Aquifer and qualifies as a regulated activity that is required to comply with the Edwards Aquifer Rules. The Edwards Aquifer Protection Program (EAPP) Regulations are outlined in document RG-348, *Complying with the Edwards Aquifer Rules; Technical Guidance on Best Management Practices RG-348, including Errata Sheet (March 28, 2009) and Addendum Sheet (January 20, 2017); July 2005.*

Along US 183N, the project is located within the Edwards Aquifer Recharge Zone from Station 729+77.58 to the Loop 1 interchange. Along US 183N from the Loop 1 interchange to Station 282+10.15 the project is located within the Edwards Aquifer Transition Zone. None of the Loop 1 project south of US 183N is located within the Edwards Aquifer. The TCEQ requires that any regulated activity that is partially in the recharge zone and the transition zone must be treated as if the entire site is located in the recharge zone. See Figure 4 for Edwards Aquifer Contributing Zone Map.

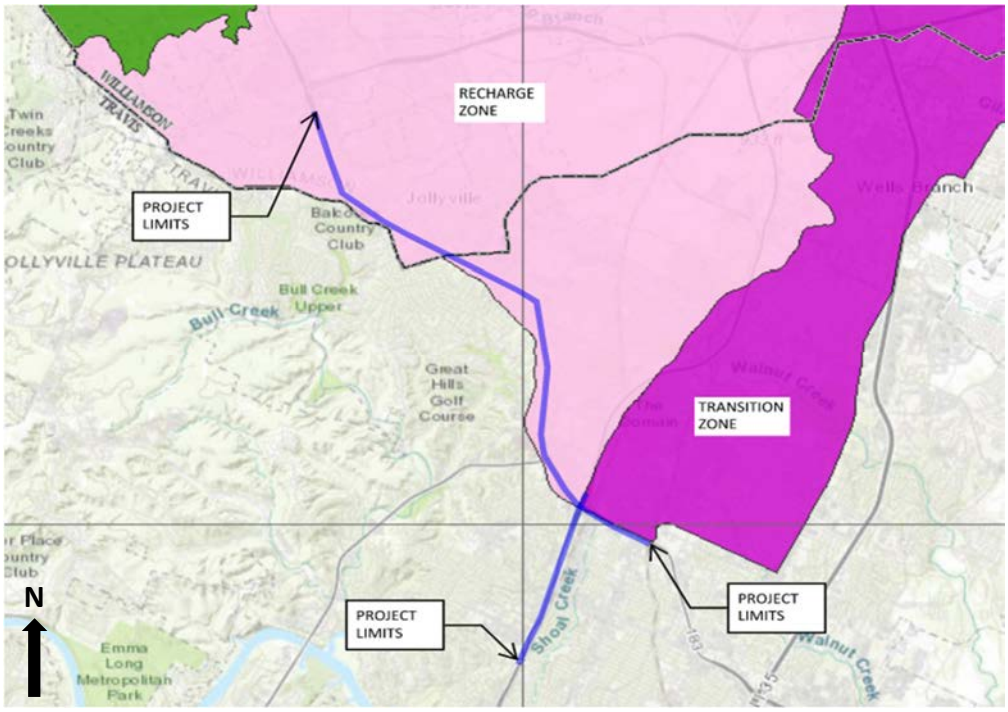

Figure 4. Edwards Aquifer Contributing Zone Map

4 LAKE CREEK WATERSHED

The entire Lake Creek Watershed is a long and narrow watershed extending from west to east, averaging approximately 2 miles wide and approximately 10 miles long. It extends from the 620N and Anderson Mill Road interchange at the western boundary to the A.W. Grimes Boulevard at the eastern edge. The total area of the watershed is approximately 21 square miles. The watershed consists mainly of Open/Undeveloped/Agriculture, Single-Family, Commercial, and Office Land Use designations. US 183N crosses through the Lake Creek watershed, north to south, approximately 2 miles east of the western boundary of the watershed. The watershed contains numerous detention ponds and water quality ponds and those within the project limits will be evaluated and upgraded to accommodate new impervious areas from the project, including ultimate design impervious cover areas as depicted in Figures 2 and 3.

The project was divided by eight major outfalls (Outfall A through Outfall H). The Lake Creek Watershed within the project includes Outfall A, Outfall B, Outfall C, and Outfall D. The project water quality treatment facilities within the Lake Creek watershed consist of the 620 Median Pond and the Lake Creek Water Quality Vaults in Basin A, the Hymeadow Water Quality Vaults in Basin B, the Pond Springs Water Quality Pond in Basin C, and the Woods Pond in Basin D.

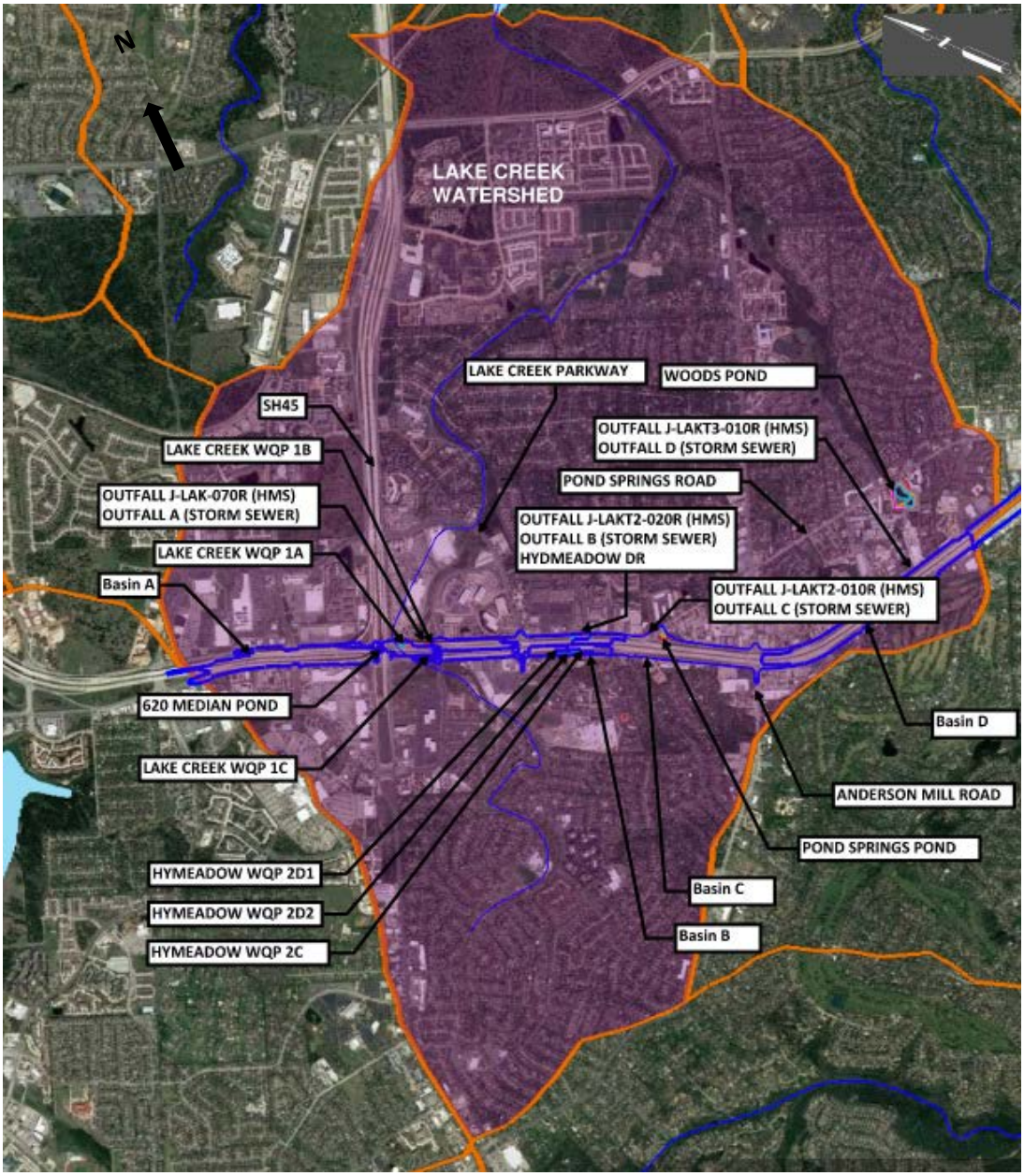

Figure 5. Lake Creek Watershed Map

4.1 BASIN CHARACTERISTICS

4.1.1 Basin A

Basin A is within the Lake Creek watershed in Williamson County. The basin drains from west to east from El Salado Parkway on the west and Brushy Creek on the east. The basin is located within the Edwards Aquifer Recharge Zone. US 183N runs north to south through the western edge of the watershed. Basin A is on the northwestern edge of the watershed. Basin A has the following existing structures:

- Line B and Line C Pond (not impacted by the project),
- Pond E, Pond F (not impacted by the project),
- Pond G (not impacted by the project),
- Main Pond (not impacted by the project),
- North Pond (not impacted by the project),
- South Pond (not impacted by the project),
- 620 Median Pond (Water quality and Sedimentation Pond)
- Lake Creek 1A (Underground water quality sedimentation and filtration vault with an existing pump),
- Lake Creek 1B, (Underground water quality sedimentation and filtration vault) and
- Lake Creek 1C (Underground water quality sedimentation and filtration vault).

The 620 Median Pond and Lake Creek 1A, 1B, and 1C ponds receive runoff from within the basin A area. The project Technical Provisions made no requirements for updating the 620 Median Pond as the pond has enough volume to accommodate the increase in TSS load from the project. Lake Creek 1A, 1B, and 1C will be modified as part of this Project. Flows from the ponds in basin A discharge into Lake Creek. The water quality treatment facilities in basin A do not have offsite flows passing through them. The offsite flows are routed away from the WQ structures by culverts under US 183N. Each of the water quality treatment facilities and their respective watershed areas are shown on a basin map in Appendix D and in the figure below.

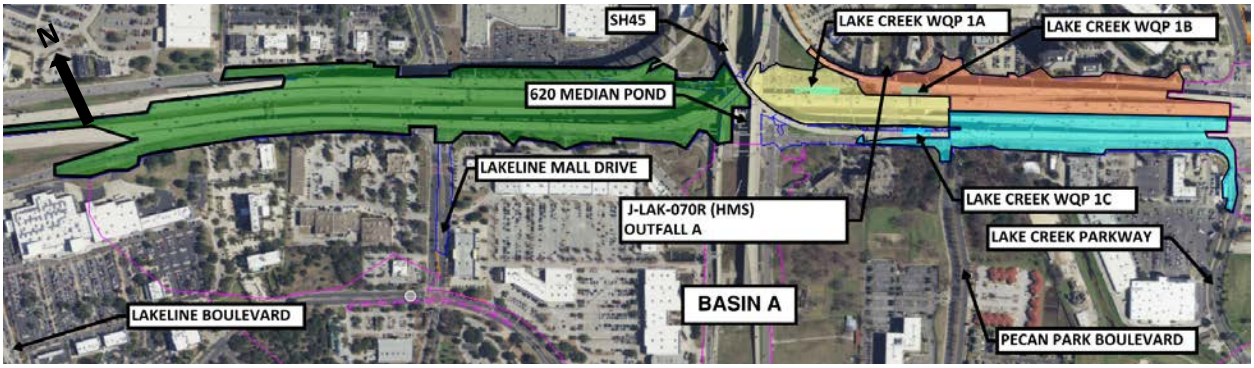

Figure 6. Basin A Map

4.1.2 Basin B

Basin B is within the Lake Creek watershed and drains directly to Tributary 2 of the watershed via a concrete box culvert under Hymeadow Drive. US 183N runs north and south through the watershed between South Lakeline Boulevard to Oceanaire Boulevard. Basin B contains five separate existing water quality vaults receiving project runoff for sediment removal. The five vaults each have separate drainage areas and are named Hymeadow 2A (that has an existing pump), Hymeadow 2B, Hymeadow 2C, Hymeadow 2D1, and Hymeadow 2D2. Some of the water quality vaults in basin B receive offsite flows. These vaults are Hymeadow 2C, Hymeadow 2D1, and Hymeadow 2D2. The acreages of offsite flows for each vault are document and calculated for in the TCEQ calculations in Appendix F. Each of the vaults and their respective drainage areas are shown on a basin map in Appendix D and in the figure below.

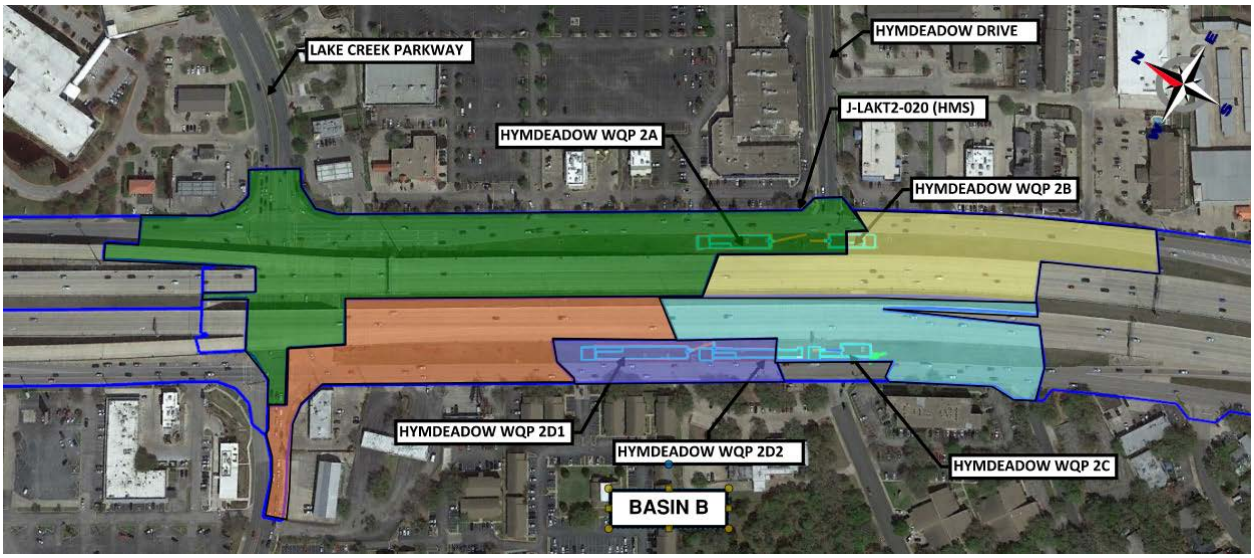

Figure 7. Basin B Map

4.1.3 Basin C

Basin C is within the Lake Creek Watershed in Williamson County. The basin drains from west to east through Pond C (otherwise know as the Pond Springs Pond) through Tributary 2 into Lake Creek. US 183N runs north to south through the western edge of the watershed, with basin C being on the western edge of the watershed. The basin is located in the Edwards Aquifer Recharge Zone. The onsite drainage area drains to an existing Pond C water quality pond (otherwise known as the Pond Springs Water Quality Pond) that will be adjusted from a sedimentation / filtration system to a batch detention basin. All offsite flow is bypassed around the water quality structure to a downstream existing detention

system. Adjustments were made to the height of the weir within the existing splitter box that flows to Pond Springs Pond, to ensure all changes in impervious area within the basin will be treated within the water quality structure. Pond C is being upgraded for additional water quality volume to mitigate those impacts. The drainage areas for Basin C are delineated and shown in the figure below.



Figure 8. Basin C Map

The drainage areas for basin C are also show in Appendix D.

4.1.4 Basin D

Basin D is within the Lake Creek Watershed in Williamson County. The basin drains through Woods Pond (Wet Pond which captures all offsite and onsite flows from the basin for water quality) at Pond Springs Road and continues down until it reaches Lake Creek. US 183N runs north to south through the western edge of the watershed, with basin D being on the western edge of the watershed. The basin is located within the Edwards Aquifer Recharge Zone. Basin D drainage areas of the Lake Creek watershed crossing US 183N are delineated and shown on the basin map in Appendix D and in the Figure 9.

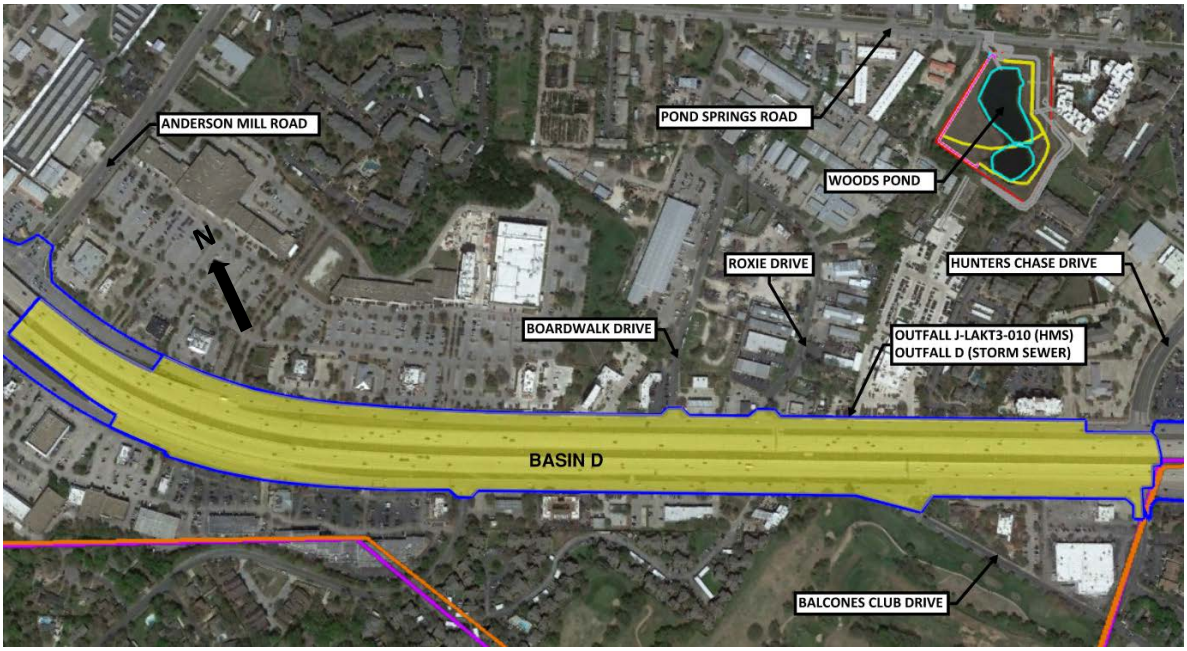

Figure 9. Basin D Map

5 TSS REMOVAL AND BMP SIZING CALCULATIONS

5.1 HISTORICAL METHOD FOR CALCUATING BMP'S

Historically the TCEQ water quality treatment basins were sized based upon the first flush method. The water quality volume to be treated was determined by delineating the total runoff area draining to the water quality pond and multiply the area by 0.5 inches of rainfall.

Item 3.3.1 of RG-348 states:

"These BMP sizing calculations have been substantially revised from the version included in the 1999 edition of the guidance document. The objectives of these revisions are to:

- *Simplify the calculations*
- *Resolve discrepancies in the TSS load calculations*
- *Provide similar sized facilities as recommended in the previous manual*

A major issue with the previous procedure was that the TSS load calculated based on the post development conditions often did not match the sum of the TSS loads calculated from the individual watersheds on the tract. This has now been resolved."

5.2 HISTORICAL WPAP PERMITS

A Water Pollution Abatement Plan (WPAP) application, submitted by HNTB Corporation and approved in April 2003, permitted Line B and C Pond, Ponds E, F, and G, North Pond, South Pond, and Main Pond as water quality structures. These ponds within basin A are not being modified per this Project, so the WPAP was included for reference only.

A Water Pollution Abatement Plan (WPAP) application (Wilco US 183N Improvements 1-14-1999) for the SH45/US 183N interchange was prepared by Turner Collie and Braden INC and was approved in 1999. This documentation has information regarding water quality volumes for the existing Lake Creek Ponds in basin A, Hymeadow Ponds in basin B, Pond Springs Pond in basin C, and Woods Pond in basin D per the historical TSS removal calculations. Table 1, shown below, is a summary of the WPAP calculations derived from the Wilco US 183N Improvements 1-14-1999. Copies of the historical WPAP can be found in Appendix I – Historical WPAP permits.

Table 1: Existing Water Quality Pond Design Data

Basin	WQ Structure ID	Contributing Area (Ac.)[1]	As-Built Water Quality Storage Volume (CF)
A	620 Median Pond[2]	61.28	89,781
A	Lake Creek 1A	8.57	15,600
A	Lake Creek 1B	7.09	12,873
A	Lake Creek 1C	7.09	13,467
B	Hymeadow Pond 2A	8.27	15,123
B	Hymeadow Pond 2B	4.29	7,923
B	Hymeadow Pond 2C	9.14	16,734
B	Hymeadow Pond 2D1	10.48	20,042
B	Hymeadow Pond 2D2	13.94	25,464
C	Pond Springs Pond	36.33	65,939
D	Woods Pond	102.17	312,908

Note 1. WPAP Calculations do not differentiate between Off-Site and On-Site
Note 2. 620 Median Pond is not being modified as part of this project. However additional proposed impervious area is being routed to the 620 Median Pond. Calculations were completed to verify the structure has the additional capacity to treat additional impervious areas.

5.3 EXISTING BMP CHARACTERISTICS PER BASIN

5.3.1 Basin A

Basin A has several existing water quality and detention structures. Line B and C Pond is a water quality extended detention basin. Ponds E, F, and G are water quality gravel filter ponds. The Main Pond, North Pond, and South Pond are all detention ponds. The 620 Median Pond is a water quality sedimentation and sand filtration pond. Lake Creek 1A, 1B, and 1C are underground water quality sedimentation and filtration vaults. Lake Creek 1A pond discharges via an existing pump. The 620 Median Pond and Lake Creek 1A, 1B, and 1C ponds receive runoff from the project area. Lake Creek 1A, 1B, and 1C will be modified as part of this Project. Flows discharge into Lake Creek.
There are no current off-site areas flowing to sub-basins Lake Creek 1A, 1B, and 1C. Historically, Lake Creek 1C received offsite flows, but regrading in this off-site area along with the construction of a depressed water quality feature have diverted these offsite flows from reaching the Lake Creek 1C water quality facility.
For the 620 Median Pond, a splitter box has been installed upstream of the pond to divert off-site flows away from the pond and into an existing multi-box culvert. Therefore, no off-site flows were considered for post project TSS calculations.

5.3.2 Basin B

Basin B has five existing water quality vaults as BMP measures for storm water runoff exiting the Project area. The concrete vaults, inside the freeway right of way, contain sedimentation and filtration processes as BMP measures. Hymeadow Pond 2A, 2B, 2C, 2D1, and 2D2 are underground water quality sedimentation and filtration vaults, with Pond 2A outletting via an existing pump. All 5 Hymeadow water quality vaults will be modified as part of this Project.

Hymeadow water quality vaults 2A, and 2B serve onsite areas. Hymeadow water quality vaults 2C, 2D1 and 2D2 intercepts some onsite and offsite flow. Each pond has a splitter box that controls the amount of runoff being treated for water quality. The excess runoff bypasses into a cross drainage structure. Some offsite runoff flows directly into the cross-drainage structure and is not treated for water quality. The offsite areas shown in 1987 as built information that will flow into basin B are shown in Figure 10. The full as built set can be found in Appendix J.



Figure10. Offsite Area Contributing to Basin B

Impervious area for the offsite development from 1987 were pulled from these as built drawings. There were two existing office buildings and an apartment complex in the contributary area for Hymeadow water quality vaults 2D1 and 2D2. The impervious offsite area for Hymeadow water quality vault 2C contained one row of houses along Lake Meadow Drive. This area drained towards Research Blvd, the frontage road along US 183N.

5.3.3 Basin C

Basin C's BMP is made up of a sedimentation and filtration water quality pond and a detention pond both named Pond Springs Pond. Onsite runoff drains to the sedimentation and filtration water quality pond during high flow events. Excess runoff bypasses to the detention pond. Additionally, most offsite flow bypasses the water quality pond completely via separate culverts and drains directly into the detention pond. Pond Springs Pond will be modified to become a batch detention pond. The only offsite flow that is shown in 1987 as built information that will flow into Pond Springs Pond is a small, developed parking lot. This parking lot was included in TSS calculations and is shown in Figure 11. Full as built can be found in Appendix J.



Figure 11. Offsite Area Contributing to basin C

5.3.4 Basin D

Basin D's BMP is made up of a single existing wet pond (Woods Pond) which captures all offsite and onsite flow from the basin for water quality. Woods Pond also mitigates flow to the downstream wetland. The main portion of all offsite flow comes from the Balcones Country Club. All other offsite flows come from developed areas that have their own BMPs because they were built after 1987, when BMPs were required. These new developments were not accounted for as increased impervious area when calculating required TSS removal for basin D.

The only offsite impervious areas that will continue to go to Woods Pond are the roads that were constructed before 1987. These locations are shown in Figures 12 and 13. The full as built set can be found in Appendix J. The offsite areas are accounted for in the TCEQ calculations in Appendix F for sizing of the water quality pond.

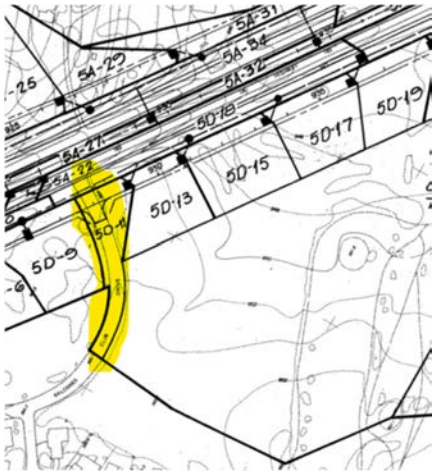

Figure12. Offsite Area Contributing to Basin D

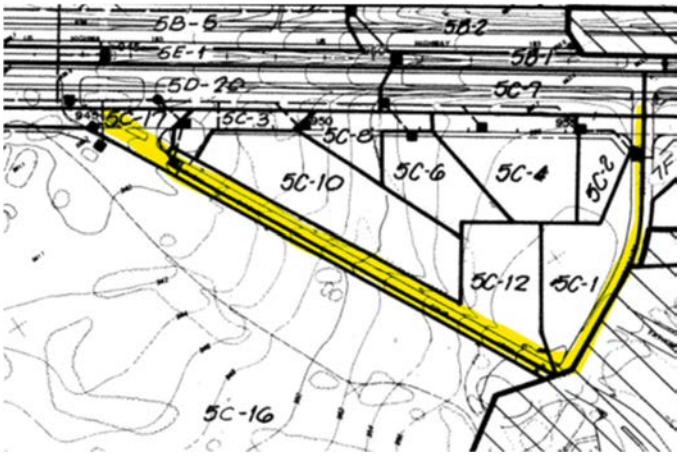

Figure13. Offsite Area Contributing to Basin D

5.4 TSS REMOVAL AND BMP SIZING CALCULATIONS

Item 3.3.1 RG- 348 states: "*Under 30 TAC Chapter 213, 80% of the increase in TSS load resulting from development (over background) must be removed. This chapter sets out the methodology to be used to calculate the increase in load. The following steps explain the process used for calculating load reduction and sizing BMPs.*

1. *Calculate the required TSS removal, which is based on the net increase in impervious acres.*
2. *Select a BMP or combination of BMPs that are appropriate for the site.*
3. *Calculate the TSS load removed by each BMP for each watershed.*

4.Calculate the percentage of runoff that must be treated to achieve the 80% removal of the increase in TSS.

5.Calculate the capture volume or minimum flow rate required to obtain the 80% removal. This volume will be a function of the type of BMP and its TSS removal efficiency.

6.If the selected BMP cannot achieve the required reduction, select another BMP with higher removal efficiency and repeat from Step (2), implement a second BMP in a treatment train approach, or reduce the increase in impervious cover."

For this project the Jellyfish Filter Systems BMP has been selected to replace Basin A Vaults 1A, 1B, and 1C, and Basin B Vaults 2A, 2B, 2C, and 2D2. For vault 2D-1 and the Basin C Pond Springs Pond, a batch detention BMP have been selected. For the Basin D, Woods Pond, a wet basin BMP will remain. All BMP structures has been sized to treat the required 80% TSS removal.

Each BMP is designed to provide TSS removal for onsite development. TCEQ requirements state that offsite runoff should be minimized by conveying it around the BMP to avoid needing to oversize the treatment facility more than required for TSS removal. In cases where offsite flow cannot be diverted, the treatment facility should take into account added required water quality volume. Many of the existing BMPs within the project limits have offsite runoff entering them and per project requirements have been designed to account for the increased volume produced from the offsite areas from 1987. The Technical Provisions state that the project shall achieve no net increase in TSS annual loading from the 1987 baseline impervious cover which is why all data was taken relative to 1987. The proposed BMPs for this project will continue to account for and provide volume for the offsite drainage entering them. The TCEQ TSS removal calculations provide procedures and calculations to determine the volume required for the offsite drainage areas.

5.4.1 1987 Baseline Impervious Conditions

Per project requirements outlined in Attachment 15-1 from the Technical Provisions the Project shall achieve no net increase in TSS annual loading from the 1987 baseline impervious cover. The 1987 baseline impervious cover was delineated from the 183N_WQ.dgn file, as provided as a supplement to the RID's within the Project limits. The 183N_WQ.dgn file contains a level that delineates the Existing 1987 impervious cover and the proposed ultimate impervious cover. These shapes were checked for reasonableness, verified with Project topography, as-builts, and City of Austin GIS data, and then utilized as a reference for impervious cover linework for the Project. Minor adjustments were made to the impervious cover linework to align more closely to existing catch basins, contours, and as-builts. Offsite impervious area was calculated based on 1987 as built information. Table 2 provides a summary of the baseline impervious areas for the basins in the Lake Creek Watershed. TCEQ policy is to count impervious cover both on top of and under bridges, overpasses, and underpasses. There are no bridges, overpass, or underpasses located within in the project limits in 1987.

The Technical Provisions require this project to redesign the proposed WQ BMPs in the Lake Creek Watershed based upon the 1987 impervious area baseline. The reasoning behind forgoing previous WQ design is the following:

1.TCEQ design criteria changed in 1999. All WQ BMPs were constructed post 1987 and several basins were constructed prior to the 1999 design criteria.

2.The permanent BMPs are mostly changing from sedimentation - sand filtration to either Jellyfish Filtration Systems or batch detention systems. Each of these BMP's have different % TSS removal efficiencies. Woods Pond was initially to be converted from wet basin to batch detention. During design, the conversion was found not geometrically feasible. The option to redesign the pond to a wet basin with staked detention was approved.

3. Batch Detention has a removal efficiency of 91% and require a smaller area than sand filters for similar treatment. The wet basin has a removal efficiency of 93%. The Jellyfish Filtration Systems are designed based on wet vault design criteria and also require a smaller area than sand filters for similar treatment.

The redesign to the 1987 baseline ensures that all proposed impervious, post 1987 impervious, is treated for 80% TSS removal. Treatment of impervious areas constructed prior to 1987 is not required to be treated per the Technical Provisions.

Table 2: 1987 Baseline Impervious Cover for BMP Sizing Calculations

Basin	WQ Structure ID	Total Drainage Basin / Outfall Area (Ac.)	Baseline Impervious Cover within Project Limits (Ac.)	Offsite Contributing Area to WQs (Ac.)	Baseline Offsite Contributing Impervious Areas to WQs (Ac.)
A	620 Median Pond	28.12	11.22	0.00	0.00
A	Lake Creek 1A	7.86	3.02	0.00	0.00
A	Lake Creek 1B	8.24	1.28	0.00	0.00
A	Lake Creek 1C	8.42	5.24	0.00	0.00
B	Hymeadow Pond 2A	6.91	0.80	0.00	0.00
B	Hymeadow Pond 2B	3.79	0.29	0.00	0.00
B	Hymeadow Pond 2C	3.28	2.09	1.63	0.50
B	Hymeadow Pond 2D1	4.62	2.81	9.86	5.87
B	Hymeadow Pond 2D2	1.26	0.32	25.70	1.95
C	Pond Springs Pond	30.94	12.43	5.77	5.77
D	Woods Pond	36.41	13.92	82.90	1.85

Note 1. 620 Median Pond is not being modified as part of this project. However additional proposed impervious area is being routed to the 620 Median Pond. Calculations were completed to verify the structure has the additional capacity to treat

additional impervious areas.
Note 2. Data for this table will match observed boundaries and does not reflect Table 1 information.

5.4.2 Post Development Impervious

Prior to 1987, improvements upon the US 183N corridor did not have any BMPs to collect TSS load that was created due to the construction of the highway and other impervious improvements. Between 1987 and 2003 several permanent water quality BMP's have been installed within the Project area to accommodate the storm water runoff from the development project of US 183N. US 183N, within Lake Creek watershed, is currently permitted with the existing permanent water quality BMPs in place today. These permanent BMP's currently service upgraded freeways including the SH 45 and US 183N traffic interchange, and the US 183N 6-lane divided highway with frontage roads in each direction. All of these developments increased the impervious area within project limits and were included in the proposed calculations. Treatment of impervious areas constructed prior to 1987 is not required to be treated per the Technical Provisions and thus improvements before 1987 were not considered. The increase in impervious area consists of adding managed lanes over an open grass-lined median, and outside shoulder widening over grass-lined ditches. The Post-Project conditions also include bridge widenings and additional sidewalks and shared use paths. Ultimate impervious cover was also included in the increase where appropriate according to Figures 2 and 3.

Impervious cover for the project was calculated to include areas as impervious if there is a bridge, overpasses, underpass, or roadway. Drainage areas in the post development analysis were updated to match current contour data. Areas under bridges, overpasses and underpasses are included in the post development impervious area calculations. Where a bridge overpasses a roadway, the impervious area was calculated for both the roadway and bridge. In some places, this creates and percent impervious above 100%. This is acceptable in these locations as we are using these values to calculate Total suspended solids (TSS) removal.

See Appendix E for Proposed Project Impervious Area Maps.

Table 3 provides a summary of the Post Development impervious areas for the basins in the Lake Creek Watershed.

Table 3: Post Development Impervious Cover for Water Quality Pond Calculations								
Basin	WQ Structure ID	HEC-HMS Model ID	Total Drainage Basin / Outfall Area (Ac.)	Total BMP Catchment Area (Ac.)	Post-Development Impervious Area (Ac.)	Increase in Impervious Cover (Ac.)	Offsite Contributing Area to WQs (Ac.)	Offsite Contributing Impervious Areas to WQs (Ac.)
A	620 Median Pond	LAK_050R2	28.12	28.12	28.29	17.07	0.00	0.00
A	Lake Creek 1A	LAKT_010R	7.86	7.86	8.31	5.29	0.00	0.00
A	Lake Creek 1B	LAK_070R	8.24	8.24	8.43	7.15	0.00	0.00
A	Lake Creek 1C	LAK_060R_2	8.42	8.42	8.43	3.19	0.00	0.00
B	Hymeadow Pond 2A	LAKT2_2A	6.91	6.91	6.62	5.82	0.00	0.00
B	Hymeadow Pond 2B	LAKT2_2B	3.79	3.79	2.94	2.65	0.00	0.00
B	Hymeadow Pond 2C	LAKT2_2C	3.28	3.28	2.84	0.75	1.63	0.50
B	Hymeadow Pond 2D1	LAKT2_2D1	4.62	4.62	4.51	1.70	0.00	0.00
		LAKT2_2D1OFF	0.00	0.00	0.00	0.00	9.86	5.87
B	Hymeadow Pond 2D2	LAKT2_2D2	1.26	1.26	0.79	0.26	25.70	1.95
C	Pond Springs Pond	LAKT2_010R	30.94	30.94	27.20	14.77	5.77	5.77
D	Woods Pond	LAKT3_010R	36.41	36.41	32.18	18.26	0.00	0.00
		LAKT3_010A1	0.00	0.00	0.00	0.00	9.57	1.85
		LAKT3_010A2	0.00	0.00	0.00	0.00	73.33	0.00

Note 1. 620 Median Pond is not being modified as part of this project. However additional proposed impervious area is being routed to the 620 Median Pond. Calculations were completed to verify the structure has the additional capacity to treat additional impervious areas.

5.4.3 TCEQ TSS Load Removal

Water quality calculations were performed in accordance with TCEQ requirements. TSS loading was calculated using the TCEQ TSS Removal Calculation Spreadsheet, which was provided by TCEQ and is based upon the TCEQ Manual RG-348 - *Complying with the Edwards Aquifer Rules: Technical Guidance on Best Management Practices.*

Per Attachment 15-1 Impact Assessment Evaluation Requirements, the water quality BMPs in the Lake Creek watershed must provide treatment for 80% of the increase in total TSS loading created by the project. Per the Technical Provisions all water quality structures in the Lake Creek Watershed are required to be batch detention.

Table 4 provides a summary of the required TSS load removal and corresponding WQ volume for the basins in the Lake Creek Watershed. Hymeadow 2D1 in basin B has been designed for batch detention with stacked detention, and the Woods Pond in basin D remains a wet pond designed for stacked detention. Water quality design aspects are further discussed in Section 6, with detention aspects discussed in the Segment 1A Drainage Report. See Appendix F for TCEQ TSS Load Removal Calculations.

Table 4: Required TSS Load Removal

Basin	WQ Structure ID	HEC-HMS Model ID	TCEQ TSS Load Removal Required (lbs)	Required Water Quality Volume (cuft)	Load Removal Provided (lbs)	Water Quality Volume Provided (cuft)
A	620 Median Pond[1,2]	LAK_050R2	14,858	46,653	20,480	89,781
A	Lake Creek 1A	LAKT_010R	4,604	N/A	4,604	N/A
A	Lake Creek 1B	LAK_070R	6,223	N/A	6,223	N/A
A	Lake Creek 1C	LAK_060R_2	2,777	N/A	2,777	N/A
	Subtotal Basin A		**28,462**	**46,653**	**34,084**	**89,781**
B	Hymeadow Pond 2A	LAKT2_2A	5,066	N/A	5,066	N/A
B	Hymeadow Pond 2B	LAKT2_2B	2,307	N/A	2,307	N/A
B	Hymeadow Pond 2C	LAKT2_2C	653	N/A	653	N/A
B	Hymeadow Pond 2D1	LAKT2_2D1	1,480	7,352	1,977	11,262
B	Hymeadow Pond 2D2	LAKT2_2D2	226	N/A	409	N/A
	Subtotal Basin B		**9,732**	**7,352**	**10,412**	**11,262**
C	Pond Springs Pond	LAKT2_010R	12,856	44,913	13,860	49,672
	Subtotal Basin C		**12,856**	**44,913**	**13,860**	**49,672**
D	Woods Pond	LAKT3_010R	15,894	51,975	23,400	102,614
	Subtotal Basin D		**15,894**	**51,975**	**23,400**	**102,614**
	TOTAL		**66,944**	**150,893**	**81,756**	**253,329**

Note 1. 620 Median Pond is not being modified as part of this project. However additional proposed impervious area is being routed to the 620 Median Pond. Calculations were completed to verify the structure has the additional capacity to treat additional impervious areas.

Note 2. 620 median pond water quality volume provided is based on 2016 post-project water quality summary found in 183N Preliminary Drainage and Water Quality Impact Analysis Memorandum, dated 11/30/2018. As-built plans and elevations based on aerial contours within the area were used for the volume calculation. Contours were verified with pick up survey.

6 PROPOSED BMP STRUCTURES

6.1 SELECTED WATER QUALITY BASIN BMP DESIGN INFORMATION

All BMP's design follows TCEQ RG-348 Guidelines, Complying with the Edwards Aquifer Rules Addendum January 20, 2017. The following information is provided to relate how the guidelines correlate to meeting the project Technical Provisions for the selection of the BMP's used on the project.

Originally, batch detention basins were proposed for Basins 1A, 1B, 1C, 2A, 2B, 2C, and 2D-2. Due to high risk construction around existing project features, mainly existing MSE walls supporting 183N, Jellyfish Filtration Systems were introduced to reduce risk as well as to minimize reuse of aged existing vaults. Section 3.2.22 of RG-348, Addendum January 20, 2017 (see page 399 of https://www.tceq.texas.gov/assets/public/comm_exec/pubs/rg/rg348/rg-348.pdf) discusses the selection criteria for Jellyfish Filtration Systems.

- *Use when space constraints make installation of a surface treatment system infeasible*
- *Appropriate for space-limited areas*
- *Appropriate for various size drainage basins*
- *Requires a minimal amount of land since underground*
- *Appropriate for retrofits and new development*
- *Appropriate to combine with low impact development applications and Green Infrastructure.*

For design, efficiency varies on the Jellyfish Filtration System based on treatment of the initial 1.1 in/hour storm. A peak flow for treatment is determined based on TCEQ spreadsheets, and the Jellyfish Units are sized. Below is a summary of the flow and design of the Jellyfish Filtration Systems. These facilities are to be designed to be offline treatment.

- Storm sewer collection system – collects the runoff from the project limits.
- Flow diversion structure – The flow diversion structure is upstream of both the outfall culvert and the Jellyfish Filtration structure. The weir elevations of the flow diversion structures are set at the required water quality treatment surface elevations, that will divert first flush flow eaual or greater than the peak flow that the Jellyfish Unity can treat. The flow diversion structure ensures that only the water volume that needs to be treated is sent to the Jellyfish Filtration System. In the instance where one Jellyfish Filtration System can not treat the peak flow volume needed to be treated for the basin, the splitter structure will have two outlet pipes instead of one where first flush is diverted independently to one Jellyfish Filtration System. Upon treatment, flow will leave the Jellyfish unit via an outlet pipes and flow to the outlet structure.
- Post construction inspection is required by the TCEQ prior to putting the Jellyfish Filtration Systems into service. Quarterly inspections are recommended for the first year of operation then a maintenance plan is developed. For subsequent years, a minimum annual inspection is required by the TCEQ.
- The TCEQ RG-348 Guidelines require that maintenance be performed annually. Cleaning includes removal and disposal of all water, sediment, oil and grease, and debris. Manned entry is required needing certification for confined space entry.
- The filter cartridges need testing for flow rate annually on a single draindown cartridge using a jellyfish cartridge backflush pipe. If flow rate does not meet 14 gallons in 15 seconds, all

cartridges in the unit need to be backflushed. If after this process cartridges not meeting flow requirements must be replaced

- The Jellyfish unit should be cleaned out immediately after an oil, fuel, or chemical spill
- Jellyfish cartridge cleaning is performed by removing the cartridge from the cartridge deck and externally rinsing the filtration tentacles using a low-pressure washer. If performed within the structure, the cartridge should be suspended over the maintenance access wall opening in the cartridge deck so the rinsate flows into the lower chamber of the jellyfish filter. if rinsing is done outside the unit, the cartridge tentacles should be rinsed in a suitable basin such as a plastic barrel or tub, with rinsate subsequently poured into the maintenance access wall opening in the cartridge deck. sediment is subsequently removed from the lower chamber by standard vacuum service.
- Existing pumps in the Lake Creek Pond 1A and the Hymeadow 2A Pond are proposed to be removed as called for in the project technical provisions. The proposed Jellyfish Filtration Systems will be gravity flow and not require proposed pumps.
-

For Basin 2D-2 and Basin C (Pond Springs Pond) it has been determined to convert these to batch detention basins. Section 3.2.17 of RG-348, Addendum January 20, 2017 (see page 362 of https://www.tceq.texas.gov/assets/public/comm_exec/pubs/rg/rg348/rg-348.pdf) discusses the selection criteria for batch detention facilities.

- *Use when BMP methods are limited, because can achieve more than 80% TSS removal.*
- *Use where water availability prevents use of wet basins.*
- *Use where land availability is restricted (site is less than 5 acres for below grade installation) and there is little elevation head available.*
- *Use where Hazardous Material Trap is required.*

Section 15.7.1, of the Technical Provisions states, "*Any existing Hazardous Material Traps will be removed and replaced with manual valves on the facility outlet structure. All ponds will have manual valves at a readily accessible location as approved by the Mobility Authority. The valve type shall be as coordinated with and approved by the Mobility Authorit*y".

Due to the historically poor performance of the existing Hazardous Material Traps, it is the intent of the RMA to replace the traps with a manual valve that can be closed to ensure any hazards that migrate to the basin are trapped until they can properly be removed and disposed of. For these batch detention basins, to comply with the TP requirements, a manual valve and an actuated valve will be provided at the outfall.

Below is a summary of the flow and design of the batch detention structures. These facilities are to be designed to be offline treatment.

- Storm sewer collection system – collects the runoff from the project limits.
- Flow diversion structure – The flow diversion structure is upstream of both the outfall culvert and the batch detention structure. The weir elevations of the flow diversion structures are set at the required water quality treatment surface elevations. The flow diversion structure ensures that only the water volume that needs to be treated is sent to the basin.
- Water quality structure sizing – is based upon the TCEQ spreadsheets as discussed in 5.4.3 of this report. Existing structures are modified to fit into the physical limitations of the project and where appropriate, they are modified to ensure not conflict with future ultimate work.
- Outfall structure – A trash rack is placed at the outfall to collect debris. After water passes through the trash rack the outflow is controlled by an actuated valve and a level. The level senses when the basin is full and sends a signal that starts a 12-hour timer. After 12 hours the timer sends a signal to the actuated valve to open. The actuated valve is designed to drain down the structure over a period of 48 hours and at a velocity of less than 3fps. This slow draw down prevents a potential peak in the downstream hydrograph. The slow draw down of less than 3 fps also prevents the resuspension of solids in the structures. Resuspension of solids can be flushed downstream with a high outfall velocity.
- A manual valve and an actuated valve will be provided at the outfall to meet the requirements for batch detention and technical provisions.
- Maintenance facilities such as access from the roadway and equipment ramps are also part of the site design for the batch detention facilities and shown on the water quality plans and profiles in Appendix G.

Woods Pond was initially to be converted from wet basin to batch detention. During design, the conversion was found not geometrically feasible. The option to redesign the pond to a wet basin with staked detention was approved.

Table 5 lists the Summary of the existing and proposed project facilities within the Lake Creek Watershed (in accordance with Attachment 15-1 of the project Technical Provisions). (See also Appendix A).

Table 5: Existing and Proposed WQ Facilities			
Basin	**Existing WQ Facility**	**Proposed WQ Facility**	**WQ Requirements**
A	Line B and Line C Pond (WQ Extended Detention)	No proposed modifications	
A	Pond E, Pond F, and Pond G (WQ Vertical Gravel Filters)	No proposed modifications	
A	Main Pond, North Pond, and South Pond (detention)	No proposed modifications	
A	620 Median Pond (Vault WQ sed – sand filtration)	No proposed modifications	
A	Lake Creek 1A (Vault WQ sed – sand filtration)	Jellyfish Filtration Systems	Abandon the existing vault by capping inlet and outlet pipes and filling with sand backfill. Bypass the existing splitter structure and include design of a new splitter structure and diversion pipes to the Jellyfish Filtration System. Provide treatment for 80% of increase in TSS load in addition to the previously permitted (record drawings) load removal.
A	Lake Creek 1B (Vault WQ sed – sand filtration)	Jellyfish Filtration Systems	
A	Lake Creek 1C (Vault WQ sed – sand filtration)	Jellyfish Filtration Systems	
B	Hymeadow Pond 2A (Vault WQ sed – sand filtration)	Jellyfish Filtration Systems	Abandon the existing vault by capping inlet and outlet pipes and filling with sand backfill. Bypass the existing splitter structure and include design of a new splitter structure and diversion pipes to the Jellyfish Filtration System. Provide treatment for 80% of increase in TSS load in addition to the previously permitted (record drawings) load removal.
B	Hymeadow Pond 2B (Vault WQ sed – sand filtration)	Jellyfish Filtration Systems	
B	Hymeadow Pond 2C (Vault WQ sed – sand filtration)	Jellyfish Filtration Systems	
B	Hymeadow Pond 2D1 (Vault WQ sed – sand filtration)	Surface WQ Batch Detention with Stacked Detention	
B	Hymeadow Pond 2D2 (Vault WQ sed – sand filtration)	Jellyfish Filtration Systems	
C	Pond Springs Pond (WQ Sed-sand filtration)	Water Quality Expansion[1]	Provide treatment for 80% of increase in TSS load in addition to the previously permitted (record drawings) load removal. Remove existing gabion wall.
C	Pond Springs Pond (Detention)	No proposed modifications	
D	Woods Pond WQ Wet Pond	WQ Wet Pond with Stacked Detention based on CTRMA Approval	Provide treatment for 80% of increase in TSS load in addition to the previously permitted (record drawing) load removal. Pond outfall system shall be surveyed and reviewed for function and replaced per the Technical Provisions Section 15 and approved by the Mobility Authority.

Note 1. Further discussion with RMA clarified the intention of Basin C is to convert the existing sedimentation and sand filter to batch detention. It is not the intent of Attachment 15-1 to expand the sedimentation or sand filter structures within Basin C. See Appendix K for Meeting Minutes.

6.2 BASIN A

Basin A includes the 620 Median Pond; however, no changes or modifications are being made to the pond for this project. Basin A contains three structures that will be modified. Lake Creek 1A, 1B, and 1C currently exist as underground sedimentation and filtration vaults. As previously mentioned, the proposed condition includes abandonment of the existing vaults and providing a Jellyfish Filtration System for each basin, providing a maintenance access road into the basin location. A splitter box will be designed with a pipe sized for treatment of first flush flow into the Jellyfish Filtration System, with flows outletting to a pipe connecting with the existing drainage pipes and/or box culverts.

See Appendix G for Water Quality Structures Plans and Profiles. See Appendix H for Water Quality Outlet Control Sizing Calculations.

6.3 BASIN B

Basin B contains five structures to be modified. Hymeadow 2A, 2B, 2C, 2D1, and 2D2 currently exist as underground sedimentation and filtration vaults. As previously mentioned, the proposed condition foir Hymeadow 2A, 2B, 2C and 2D2 includes abandonment of the existing vaults and providing a Jellyfish Filtration System for each basin, providing a maintenance access road into the basin location. A splitter box will be designed with a pipe sized for treatment of first flush flow into the Jellyfish Filtration System, with flows outletting to a pipe connecting with the existing drainage pipes and/or box culverts. For Hymeadow 2D1, the proposed condition includes converting the enclosed vault to an open air pond by removing the top, constructing retaining walls up to existing grade, providing a maintenance access road into the pond, and removing the sedimentation and filtration bays and replacing them with surface batch detention systems providing volume for water quality. The outlet structures will have a trash rack to prevent clogging. A 6” PVC pipe will outlet flows from the batch detention basin outlet structure into a junction structure with an actuated valve and a manual valve. There is a 5’ water quality depth limit for this batch detention facility. The existing splitter box will have the weir heights adjusted to match the water quality elevation. Hymeadow 2D1 will also have stacked detention in addition to batch detention. The water quality outlet structure will have a trash rack to prevent clogging. A 6” PVC pipe will outlet flows from the batch detention basin into a junction structure with an actuated valve and a manual valve. An 18” RCP connects the junction box with an existing 18” RCP. A 27” RCP will outlet detention flows from Hymeadow 2D1. The outlet pipe invert corresponds to the water quality elevation. The 27” RCP outlet pipe will connect to an existing 48” RCP. The detention portion of the basin has a release rate based on a drawdown time of 48 hours consistent with the draining of the water quality pond. The existing splitter box in Hymeadow 2D1 will remain and function with no changes to the current weir elevation.

See Appendix G for Water Quality Structures Plans and Profiles. See Appendix H for Water Quality Outlet Control Sizing Calculations.

6.4 BASIN C

Basin C Includes the existing Pond Springs Water Quality Pond. The pond currently is a sedimentation/filtration system and will be modified to become a batch detention system. This will be done by minimizing the need for new construction and focusing on the removal of pieces to convert to batch detention. This includes removing the separating wall that divided the pond into a sedimentation and filtration section, removing the gabion wall in the filtration location, and removing the filtration material and underdrain network in the filtration section. Modifications to the existing pond includes re-grading the bottom of the pond to flow towards the outlet structure, reconstruction of the 8" PVC outlet pipe and adjustments to the weir height within the existing splitter box.

Storm water enters the BMP via a splitter structure, with a weir elevation to be modified to the water quality elevation, in a culvert under US 183N and then will bypass over the splitter weir into the Pond Springs Detention Pond just north of the water quality pond. The water quality volume will be discharged through an outlet structure after a set amount of time per batch detention regulations. The outlet structure will have a trash rack to prevent clogging. An 8" PVC pipe will outlet flows from the batch detention basin outlet structure into a junction structure with an actuated valve and a manual valve. The system will then drain through an existing 8" PVC pipe to the Pond Springs Detention Pond.

See Appendix G for Water Quality Structures Plans and Profiles.

See Appendix H for Water Quality Outlet Control Sizing Calculations.

6.5 BASIN D

Basin D will remain as a wet pond with modifications to the pond grading and plantings. This will include regrading the sediment forebay and the bottom portion of the pond. The outlet control structure will need to be modified by removing the 2-4'x2' RCB that was originally the outlet for the wet pond and replaced with 2-4'x2' RCB that have an invert just above the water quality elevation. The pond also has an existing 6'x5' RCB outlet that will remain. The spillway elevation will be modified to elevation 923.00. Modifications are shown on the plan and profile sheet. Woods pond outfalls to an existing 3-9'x7' MBC that crosses below Pond Springs Road and outfalls into a concrete lined channel.

Basin D has a large offsite area that drains into Woods Pond. Consideration was taken to offsite impervious area that would have been built before 1987 and was included in TSS removal calculations as shown in Appendix F. The offsite impervious cover was determined by the as built drainage maps that show little offsite impervious area drains into the basin. For additional drainage analysis, refer to the Segment 1A Drainage Report.

See Appendix G for Water Quality Structures Plans and Profiles.

See Appendix H for Water Quality Outlet Control Sizing Calculations.

7 HYDROLOGIC AND HYDRAULIC CALCULATIONS

Hydrologic and Hydraulic calculations are included within the Segment 1A Drainage Report.

8 CONCLUSION

This report presents the water quality treatment analysis for the Project located within the Lake Creek Watershed. Procedures defined in the TCEQ guidelines and the Project's Technical Provisions were followed to ensure there is no net increase in TSS from the 1987 Baseline condition.

The Project Technical Provisions required that there was no net increase in TSS from the 1987 baseline condition. Table 6 below shows a summary of the total annual TSS load discharged based on the baseline and watershed. As shown in the table, there is no net increase in TSS load discharged from each watershed and the Project. The water quality BMPs are sized to treat the required TSS loading and are meeting TCEQ requirements. Please note Table 6 has rounding factors that show values slightly different than the TSS calculated on the TCEQ spreadsheets. Both the table and supporting calculation in Appendix F are consistent with the information included in the WPAP permit and approved by the TCEQ.

Table 6: Corridor wide TSS Removal Summary

			Pre-Project Calculations					Pre-Project to Post-Project Ultimate Project Calculations								
Pond ID	Exist BMP	Prop BMP	Pre-Project Baseline Year	Total Drainage Basin/Outfall Area (acres)	Pre-development Impervious Area within Project limits (acres)	Annual TSS Load Discharged (lbs)	Total BMP Catchment Area (acres)	Baseline Impervious Cover within Project limits (acres)	Ultimate Design Impervious Cover within Project limits (acres)	Additional Annual TSS Load Produced by Ultimate Design (lbs)	TCEQ Required TSS Load Removal (lbs)	Potential TSS Load Removed Based on Proposed BMP Volumes (lbs)	Required TSS Load Removed (For Volume Calcs) (lbs)	Annual TSS Load Discharged (lbs)	Annual TSS Load Reduction (lbs)
Basin A			**1987**	**52.64**	**20.76**	**23524**	**52.64**	**20.76**	**53.46**	**35643**	**28462**	**53851**	**28504**	**7139**	**16385**
Lakecreek 1A	Pumped Underground	Jellyfish		7.86	3.02	3426	7.86	3.02	8.31	5777	4604	8366	4604	1173	2252
Lakecreek 1B	Underground Sed/Fil	Jellyfish		8.24	1.28	1537	8.24	1.28	8.43	7794	6223	8491	6223	1571	-34
Lakecreek 1C	Underground Sed/Fil	Jellyfish		8.42	5.24	5853	8.42	5.24	8.43	3475	2777	8494	2777	698	5156
620 Median Pond	Sed/Fil	Sed/Fil		28.12	11.22	12708	28.12	11.22	28.29	18598	14858	28501	14900	3698	9011
Basin B			**1987**	**19.86**	**6.31**	**7217**	**19.86**	**6.31**	**17.70**	**12405**	**9914**	**17868**	**10412**	**2119**	**5098**
Hymeadow 2A	Pumped Underground	Jellyfish		6.91	0.80	991	6.91	0.80	6.62	6339	5066	6675	5066	1273	-282
Hymeadow 2B	Underground Sed/Fil	Jellyfish		3.79	0.29	382	3.79	0.29	2.94	2886	2307	2976	2307	579	-198
Hymeadow 2C	Underground Sed/Fil	Jellyfish		3.28	2.09	2333	3.28	2.09	2.84	817	653	2868	653	164	2169
Hymeadow 2D1	Underground Sed/Fil	Batch Detention		4.62	2.81	3141	4.62	2.81	4.51	1852	1480	4546	1977	0	3141
Hymeadow 2D2	Underground Sed/Fil	Jellyfish		1.26	0.32	370	1.26	0.32	0.79	512	409	803	409	103	267
Basin C			**1987**	**30.94**	**12.43**	**14075**	**30.94**	**12.43**	**27.20**	**16087**	**12856**	**27464**	**12900**	**3187**	**10888**
Pond Springs	Sed/Fil	Batch Detention		30.94	12.43	14075	30.94	12.43	27.20	16087	12856	27464	12900	3187	10888
Basin D			**1987**	**36.41**	**13.92**	**15793**	**36.41**	**13.92**	**32.18**	**19888**	**15894**	**33204**	**15900**	**3988**	**11805**
Woods Pond	Wet Pond	Batch Detention		36.41	13.92	15793	36.41	13.92	32.18	19888	15894	33204	15900	3988	11805
Basin E			**1999**	**37.35**	**29.58**	**32865**	**37.35**	**29.58**	**36.00**	**6992**	**5588**	**36293**	**6000**	**992**	**31873**
Pond E	N/A	Batch Detention		37.35	29.58	32865	37.35	29.58	36.00	6992	5588	36293	6000	992	31873
Basin F			**1987**	**80.66**	**32.15**	**36416**	**80.66**	**32.15**	**77.13**	**48989**	**39151**	**77768**	**39200**	**9789**	**26626**
West Cow Path	Sed/Fil	Batch Detention		80.66	32.15	36416	80.66	32.15	77.13	48989	39151	77768	39200	9789	**26626**
Basin G			**1987**	**51.24**	**23.39**	**26364**	**51.24**	**23.39**	**51.03**	**30104**	**24058**	**51419**	**24100**	**6004**	**20361**
Seton Pond	Sed/Fil	Batch Detention		51.24	23.39	26364	51.24	23.39	51.03	30104	24058	51419	24100	6004	20361
Basin 360			**1992**	**6.06**	**4.30**	**4788**	**6.06**	**4.30**	**4.58**	**305**	**244**	**4638**	**360**	**0**	**4788**
Pond 360	N/A	Batch Detention		6.06	4.30	4788	6.06	4.30	4.58	305	244	4638	360	0	4638*
Basin H			**1992**	**129.81**	**74.40**	**83285**	**129.81**	**74.40**	**85.52**	**12111**	**9679**	**86862**	**9700**	**2411**	**80874**
Pond H/H2	N/A	Batch Detention		129.81	74.40	83285	129.81	74.40	85.52	12111	9679	86862	9700	2411	80874
TSS Load Discharge Project Total				**445**	**217**	**244328**	**445**	**217**	**385**	**182525**	**145844**	**389366**	**147076**	**35629**	**208699**

*MAXIMUM LOAD REDUCTION VALUE IS 4638, HOWEVER THE TCEQ CALCULATES 4788, IN THE CASE WHEN THE PERCENT IMPERVIOUS ACREAGE ADDITION IS SMALL, IT IS CALCULATING AN ANNUAL LOAD REDUCTION MORE THAN THE ACTUAL VALUE PERMITS.

9 REFERENCES

TCEQ RG-348 – "*Complying with the Edwards Aquifer Rules Technical Guidance on Best Management Practices includes Errata Sheet (March 28, 2009) and Addendum Sheet (Jan. 20, 2017)"*

TxDOT – "*Hydraulic Design Manual (September 2019)"*

U.S. Army Corps of Engineers – "*Hydrologic Modeling System (HEC-HMS), Version 3.5 (August 2010)"*

U.S. Department of Agriculture Soil Conservation Service (NRCS) – *"Hydrology Design Manuals"*

APPENDIX A

EXHIBIT C-ATTACHMENT 15-1 – IMPACT ASSESSMENT EVALUATION REQUIREMENTS

"Drainage Area/ Water Quality Points of Interest"	HYDROLOGIC AND HYDRAULIC REFERENCE NOTES		POND REFERENCE NOTES	REQUIREMENTS	
				Technical Provision Requirements	
	Stream	Risk Potential	Project Facility (Existing) [Proposed]	Hydrologic & Hydraulic	WQ
ALL POI					Percent TSS Annual load removals described in Attachment 15-1 are environmental commitments. However, the Project shall achieve no net increase in TSS annual loading from 1987 baseline impervious cover (with the exception of Rattan, Shoal, and Bull creeks) to Ultimate Design impervious cover. For the Rattan Creek watershed, the DB Contractor shall use the 1999 baseline impervious cover. For Shoal Creek and Bull Creek, the DB Contractor shall use the 1992 baseline impervious cover. These baselines acknowledge the previous impervious cover permitted by TCEQ without TSS treatment. The Ultimate Design impervious cover (referred to as Ultimate Post Project impervious cover), excludes the FM620/SH 45 direct connectors and associated improvements.
A	Lake Creek	Existing structures located in floodplain. No complaints per City of Austin data. Medium risk potential.	Line B and Line C Pond (WQ extended detention) Pond E (WQ vertical gravel filter) Pond F (WQ vertical gravel filter) Pond G (WQ vertical gravel filter) Main Pond (detention) North Pond (detention) South Pond (detention) 620 Median Pond (WQ sedimentation - sand filtration) Lakecreek 1A (vault WQ sedimentation - sand filtration) [surface WQ batch detention] Lakecreek 1B (vault WQ sedimentation - sand filtration) [surface WQ batch detention] Lakecreek 1C (vault WQ sedimentation - sand filtration) [surface WQ batch detention]	From downstream of project to NRCS Dam #8, no more than 0.2% increase in peak flows for the 100-year storm event. From downstream of project to NRCS Dam #8, no rise greater than 0.01-ft in WSE for the 100-year storm event.	Remove existing underground vaulted ponds and replace with Batch Detention ponds open to the surface. Install longitudinal barriers, access and maintenance requirements per the Technical Provisions. Provide treatment for 80% of increase in TSS load in addition to the previously permitted (record drawings) load removal.
B	Lake Creek Trib 2	Flow is contained in channel. No complaints per City of Austin data. Low risk potential.	Hymeadow Pond 2A (vault WQ sedimentation - sand filtration) [surface WQ batch detention] Hymeadow Pond 2B (vault WQ sedimentation - sand filtration) [surface WQ batch detention] Hymeadow Pond 2C (vault WQ sedimentation - sand filtration) [surface WQ batch detention] Hymeadow Pond 2D1 (vault WQ sedimentation - sand filtration) [surface WQ batch detention] Hymeadow Pond 2D2 (vault WQ sedimentation - sand filtration) [surface WQ batch detention]	From downstream of project to confluence with Lake Creek mainstem, no more than 0.75% increase in peak flows for 100-year storm event. From downstream of project to Coppers Creek Drive, no rise greater than 0.02-ft in WSE for the 100-year storm event. From Coppers Creek Drive to confluence with Lake Creek mainstem, no rise greater than 0.06-ft in WSE immediately upstream of Meadowheath Drive and no rise greater than 0.03-ft in WSE at other locations for the 100-year storm event.	Remove existing underground vaulted ponds and replace with Batch Detention ponds open to the surface. Install longitudinal barriers, access and maintenance requirements per the Technical Provisions. Provide treatment for 80% of increase in TSS load in addition to the previously permitted (record drawings) load removal.
C	Lake Creek Trib 2	Flow is contained in channel. No known complaints per City of Austin data. Low risk potential.	Pond Springs Pond (WQ sedimentation - sand filtration) [WQ expansion] Pond Springs Pond (detention)	None	Provide treatment for 80% of increase in TSS load in addition to the previously permitted (record drawings) load removal. Remove existing gabion wall
D	Lake Creek Trib 3	Not mapped in Best Available effective model. No complaints per City of Austin data. Low risk potential.	Woods Pond (WQ wet pond) [WQ batch detention with stacked detention]	EPA-SWMM shall be used to model the culvert outfall from the ROW to the Woods Pond. From downstream of project to NRCS Dam #8, no increase in peak flows for the 100-year storm event. From downstream of project to NRCS Dam #8, no rise in WSE for the 100-year storm event.	Provide treatment for 80% of increase in TSS load in addition to the previously permitted (record drawing) load removal. Pond outfall system shall be surveyed and reviewed for function and replaced per the Technical Provisions Section 15 and approved by the Mobility Authority.

"Drainage Area/ Water Quality Points of Interest"	HYDROLOGIC AND HYDRAULIC REFERENCE NOTES		POND REFERENCE NOTES	REQUIREMENTS	
				Technical Provision Requirements	
	Stream	Risk Potential	Project Facility (Existing) [Proposed]	Hydrologic & Hydraulic	WQ
E	Rattan Creek	No structures in mapped floodplain. No complaints per City of Austin data. Low risk potential.	Pond E [WQ batch detention]	From downstream of project to Los Indios Trail, no more than 0.75% increase in peak flows for 100-year storm event and no rise greater than 0.04-ft in WSE. From Los Indios Trail to Tamayo Drive, no more than 0.3% increase in peak flows for 100-year storm event, no rise in WSE greater than 0.02-ft in WSE, and no rise greater than 0.01-ft in WSE at locations with structural impacts. From Tamayo Drive to W. Parmer Lane, no more than 0.15% increase in peak flows for 100-year storm event and no rise in WSE greater than 0.01-ft.	Provide treatment for 85% of increase in TSS load. Maintain pedestrian access Maintain existing conveyance along Pond Springs Rd.
F	Walnut Creek Trib 7	Structures in the floodplain near Black Angus Dr. High risk potential	West Cow Path Pond, AKA Duval Pond (WQ sedimentation - sand filtration) [WQ batch detention with stacked detention]	Peak flows for the 2-, 10-, 25-, 50-, and 100-year storm events shall be mitigated to 0 increase downstream of West Cow Path Pond to Bull Run. No rise in WSE downstream of project to Bull Run. From Bull Run to Black Angus Drive, no more than 0.03% increase in 100-year storm event peak flows and no more than 0.02-ft increase in WSE From Black Angus Drive to confluence of Walnut Creek Tributary 7A, no more than 0.55% increase in 100-year storm event peak flows, no more than 0.03-ft rise in WSE, and no rise in WSE at locations with structural impacts.	Provide treatment for 80% of increase in TSS load in addition to the previously permitted (record drawing) load removal. The pond is subject to a memorandum of understanding with the City of Austin and shall also be designed in accordance with DCM and ECM. Provide low flow bypass of water quality pond to eliminate groundwater saturation of the sedimentation and filtration bed.
G	Walnut Creek Trib 7A	Structures in the floodplain along Calle Verde Dr. High risk potential	Seton Pond (WQ sedimentation - sand filtration) [WQ batch detention with stacked detention]	Peak flows for the 2-, 10-, 25-, 50-, and 100-year storm events shall be mitigated to 0 increase downstream of Seton Pond to confluence with Walnut Creek Tributary 7. No rise in WSE downstream of project to the private driveway of National Instruments Corp. located northwest of Mopac. From the private driveway of National Instruments Corp. to the confluence with Walnut Creek Tributary 7, no more than 0.01-ft rise in WSE.	Provide treatment for 80% of increase in TSS load in addition to the previously permitted (record drawing) load removal. The pond is subject to a memorandum of understanding with the City of Austin and shall also be designed in accordance with DCM and ECM. Pond outfall system shall be surveyed and reviewed for function and replaced per the Technical Provisions Section 15 and approved by the Mobility Authority.
360	Bull Creek	No changes in flows. Channel contained in ROW. Low risk potential.	Pond360 [WQ batch detention]	None	Provide treatment for 80% of increase in TSS load.
H	Shoal Creek	Structures in the 100-year floodplain along Crosscreek Dr., Milway Dr.., Shoal Creek Blvd., Bullard Dr., White Rock Dr., and Greenlawn Pkwy. High risk potential	MoPac Pond 1 (detention) MoPac Pond 2 (detention) Pond H [WQ batch detention]	From downstream of project to Crosscreek Drive, no more than 0.25% increase in peak flows for the 100-year storm event and no rise in WSE at location with structural impacts. From Crosscreek Drive to Hancock Drive Road, no increase in peak flows and no rise in WSEL for the 2-, 10-, 25-, 50-, 100-year storm events.	Provide treatment for 80% of increase in TSS load.

APPENDIX B
DESIGN CRITERIA SUMMARY

183 N
Drainage Design Criteria Summary

Design Element	Facility	Criteria	Specifications (TP) Value	Reference	Comment
WATER POLLUTION ABATMENT PLAN	**A WPAP must go through the application submission process and review process and be approved prior to commencement of construction or other regulated acitivities.**				https://www.tceq.texas.gov/permitting/eapp/wpap.html
	Software	Hydrology Hydraulics Storm Distribution WaterQuality Calculations	HEC-HMS vs. 3.5 HEC-RAS vs 6.0 SUDA TCEQ spreadsheet	Offisite Impact Assessment Evaluation Memo To be replaced by SUDA	https://www.tceq.texas.gov/permitting/eapp/spreadsheet.html
	Water Quality BMP's	The use of Permeable Friction Course (porous asphalt) is prohibited anywhere except MoPAC All waterquaility Basins shall be batch detention unless approved by the Mobility Authority.		Item 15.7.1 CTRMA TP pg 288	
	Water Quality Calculations	Water Quality Treatment Calculations shall be performed in accordance with TCEQ requirements TCEQ policy is to count impervious cover both on top and under bridges, overpasses, and underpasses Exhibit C - Attachement 15-1 Impact Assessment Evaulation Requirements are environmental commitments. The project shall achieve no net increase in TSS annual loading from the baseline impervious cover to the Ultimate Design Impervious cover.		Item 15.7.1 CTRMA TP pg 288	Exhibit C can be found on page 487 of the CTRMA TP
		Watershed ID	**Date of reference baseline Impervious Cover**		
		Bull Creek	1992		
		Lake Creek	1987		
		Rattan Creek	1999		
		Shoal Creek	1992		
		Walnut Creek	1987		
	Edwards Aquifer	Regulated activity - Any construction- related or post-construction activity on the recharge zone of the Edwards Aquifer having the potential for polluting the Edwards Aquifer and hydrologically connected surface streams. These activities include construction of highways. if the regulated activity is partially in the recharge zone and the transition zone, and the natural drainage flows back into the recharge zone. The activity will be treated as if the entire site is located in the recharge zone		30 TAC 213.3(28)	https://texreg.sos.state.tx.us/public/readtac%24ext.TacPage?sl=R&app=9&p_dir=&p_rloc=&p_tloc=&p_ploc=&pg=1&p_tac=&ti=30&pt=1&ch=213&rl=3 https://www.tceq.texas.gov/permitting/eapp/eapp-workflow.html
	Ponds	If groundwater is a known issue a low flow bypass of the pond basin shall be provided Shall Comply with FWHA HEC-22			
		Side Slopes	4:1 (Vertical walls are permitted to stay wihtin ROW) For ponds converted from underground vaults, verticla wall may be used where space is restricted Vehicle acess needs to be provided to converted vaults	Item 15.7.1 CTRMA TP pg 288	
		Bottom Slope	Min 2%		
		Access Ramp	Required - min width 12ft. Not to exceed 15% grade. Turning radius not less than 50ft Grade changes shall not exceed 12% for vertical aligments Means for equipment turnaround if located more than 200ft from paved roadway.		
		Maintenance Staging Area	min 800 SF is storage volume of pond exceeds 2,000 CF. Shall be located adjacent to the water quality facility slopes shall not exceed 10% in any direction	Item 15.7.1 CTRMA TP pg 290	
		Fences	Min 12ft wide gate		
		Valves	All ponds will have manual valves at a readily accessable location.		
		Dams	DB is required to comply with the TCEQ Dam Safety requirements A Dam is exempt if the maximum capcaity of the Dam is less tha 500 Ac-ft Low-hazard - no loss of human life expected and minimum ecomomic loss	Item 15.7.1 CTRMA TP pg 289 TCEQ Dam Safety Guideance	https://www.tceq.texas.gov/assets/public/compliance/field_ops/damsafety/DamSafetyGuidance090113.pdf
SWPPP		For Areas that will have more than 10 acres within a common drainage area disturbed at one time, a sediment basin will be provided For Areas that will have less than 10 acres within a common drainage area disturbed at one time, a smaller sediment basin/ sediment traps will be usedin combination with other erosion and sediment controls.		F-0602_temporary_stormwater (item 10)	https://www.tceq.texas.gov/permitting/eapp/wpap.html

APPENDIX C
OVERALL LAKE CREEK WATERSHED MAP

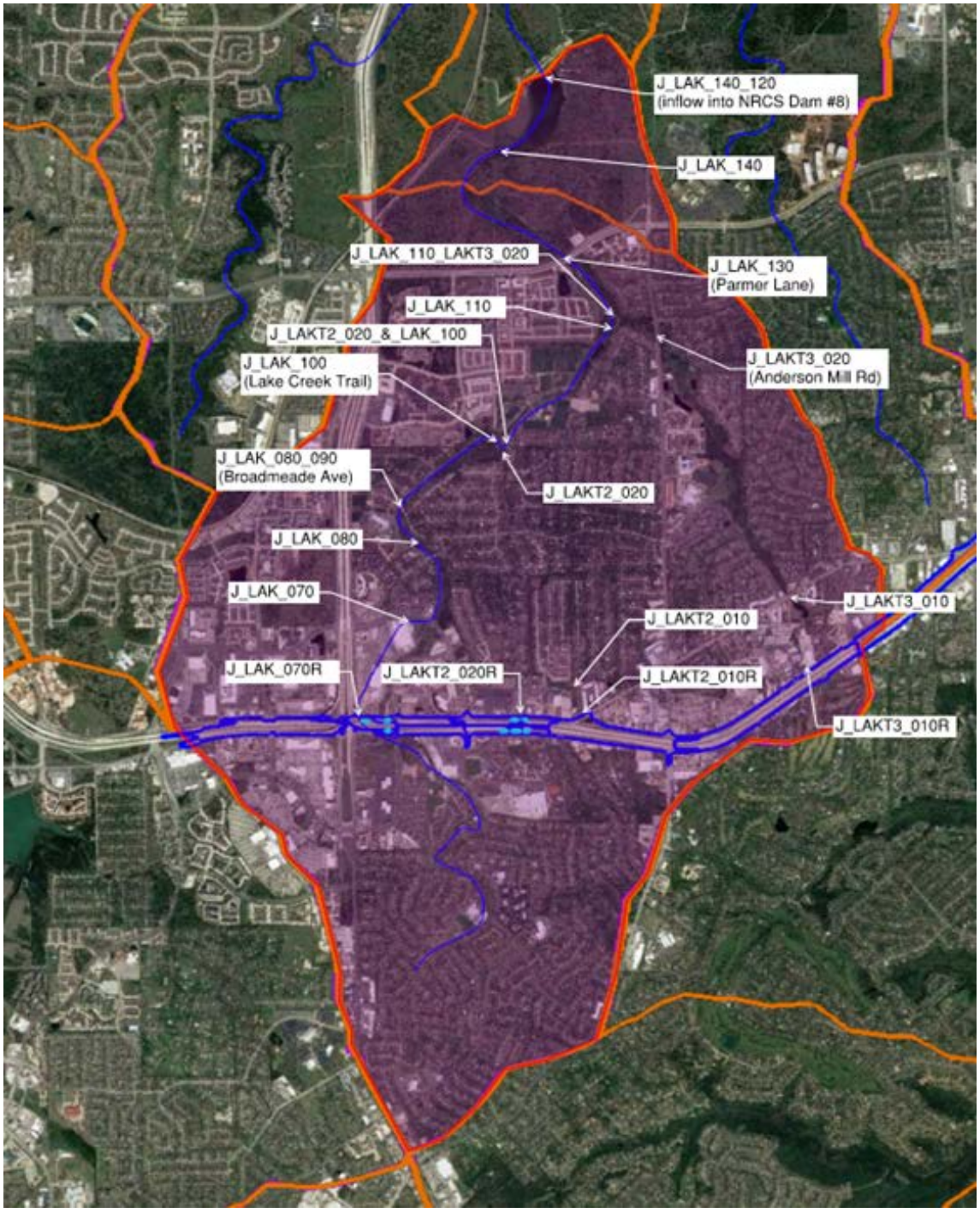
J_LAK_140_120
(inflow into NRCS Dam #8)
J_LAK_140
J_LAK_110_LAKT3_020
J_LAK_130
(Parmer Lane)
J_LAK_110
J_LAKT2_020_&_LAK_100
J_LAK_100
(Lake Creek Trail)
J_LAKT3_020
(Anderson Mill Rd)
J_LAK_080_090
(Broadmeade Ave)
J_LAKT2_020
J_LAK_080
J_LAK_070
J_LAKT3_010
J_LAKT2_010
J_LAK_070R
J_LAKT2_020R
J_LAKT2_010R
J_LAKT3_010R

APPENDIX D
BASIN MAP

BASIN A

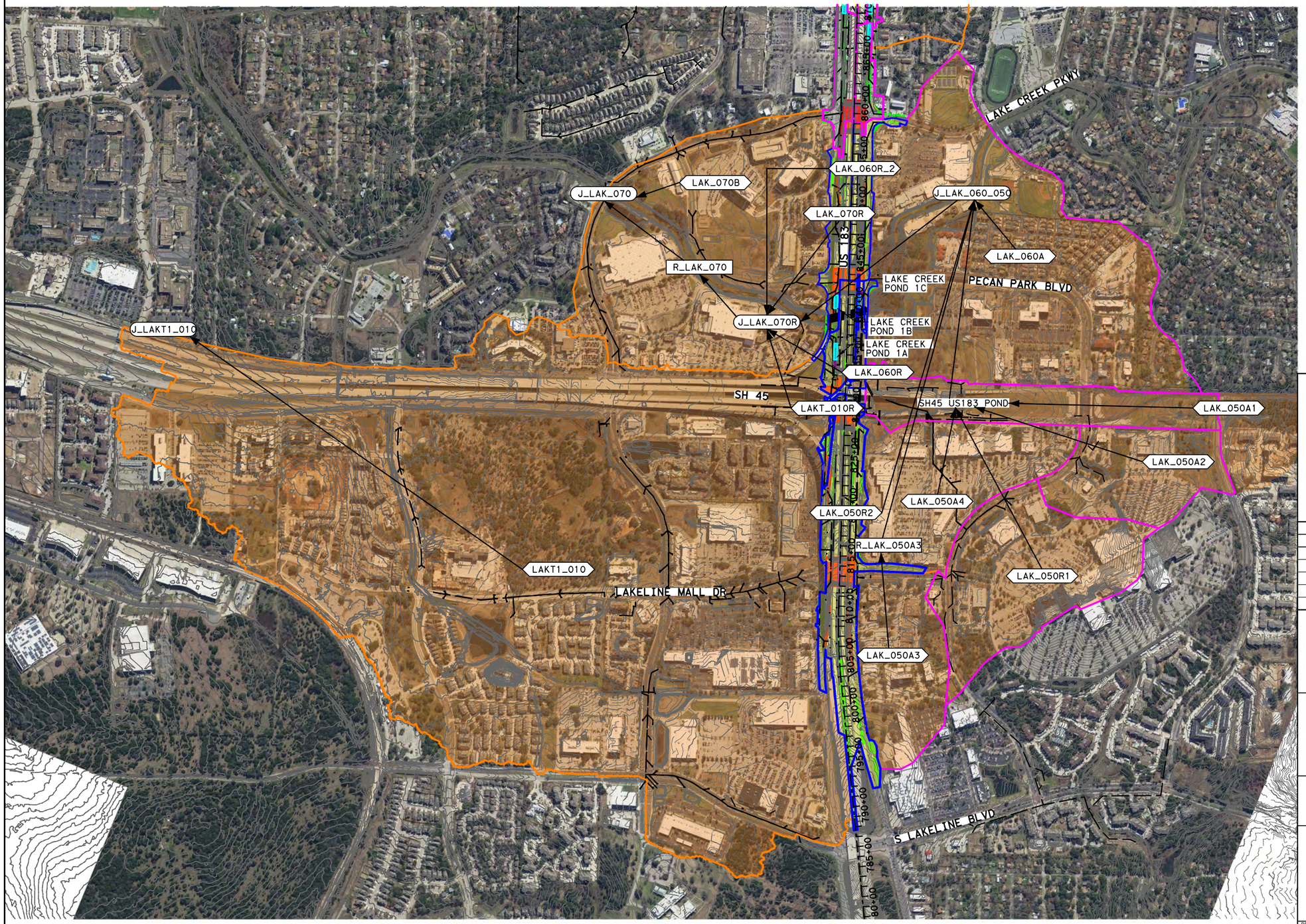

HORIZONTAL SCALE
0' 500' 1000'

LEGEND

- OFFSITE BASIN DIVIDE
- ONSITE AREA
- WATER QUALITY POND
- BASIN AREA FLOWING TO WATER QUALITY POND
- WALT7000C — SUB-BASIN ID
- JWALT7020 — HYDRAULIC JUNCTION
- RWALT7010A — HYDRAULIC REACH

NOT FOR CONSTRUCTION
FOR REVIEW ONLY. NOT FOR PERMITTING, BIDDING, OR CONSTRUCTION.

ISSUE RECORD

NO.	DESCRIPTION	DATE
A	30% DESIGN	22SEP21
B	65% DESIGN	25FEB22
C	100% DESIGN	02SEP22

CENTRAL TEXAS REGIONAL MOBILITY AUTHORITY

GREAT HILLS CONSTRUCTORS

PARSONS
TBPE Registration No. F-1481

183 NORTH MOBILITY
SEGMENT 1A
DRAINAGE AREA MAP
BASIN A

DESIGNED	FED. RD. DIV. NO.		FEDERAL AID PROJECT NO.	HIGHWAY NO.
KJ	6			US 183
DRAWN	STATE	DISTRICT	COUNTY	DRAWING
RG	TEXAS	AUSTIN	TRAVIS, WILLIAMSON	1ADRMAPA
CHECKED	CONTROL	SECTION	JOB	SHEET NO.
MM	0151	06	143	
APPROVED				
TM				

User: p0097627 Date: 5/19/2023 Time: 7:53:09 AM Pen Table: 183N_Standard.tbl Plot Config: 183N PDF.pltcfg
File Name: 1A-DRMAP-A.dgn

BASIN B

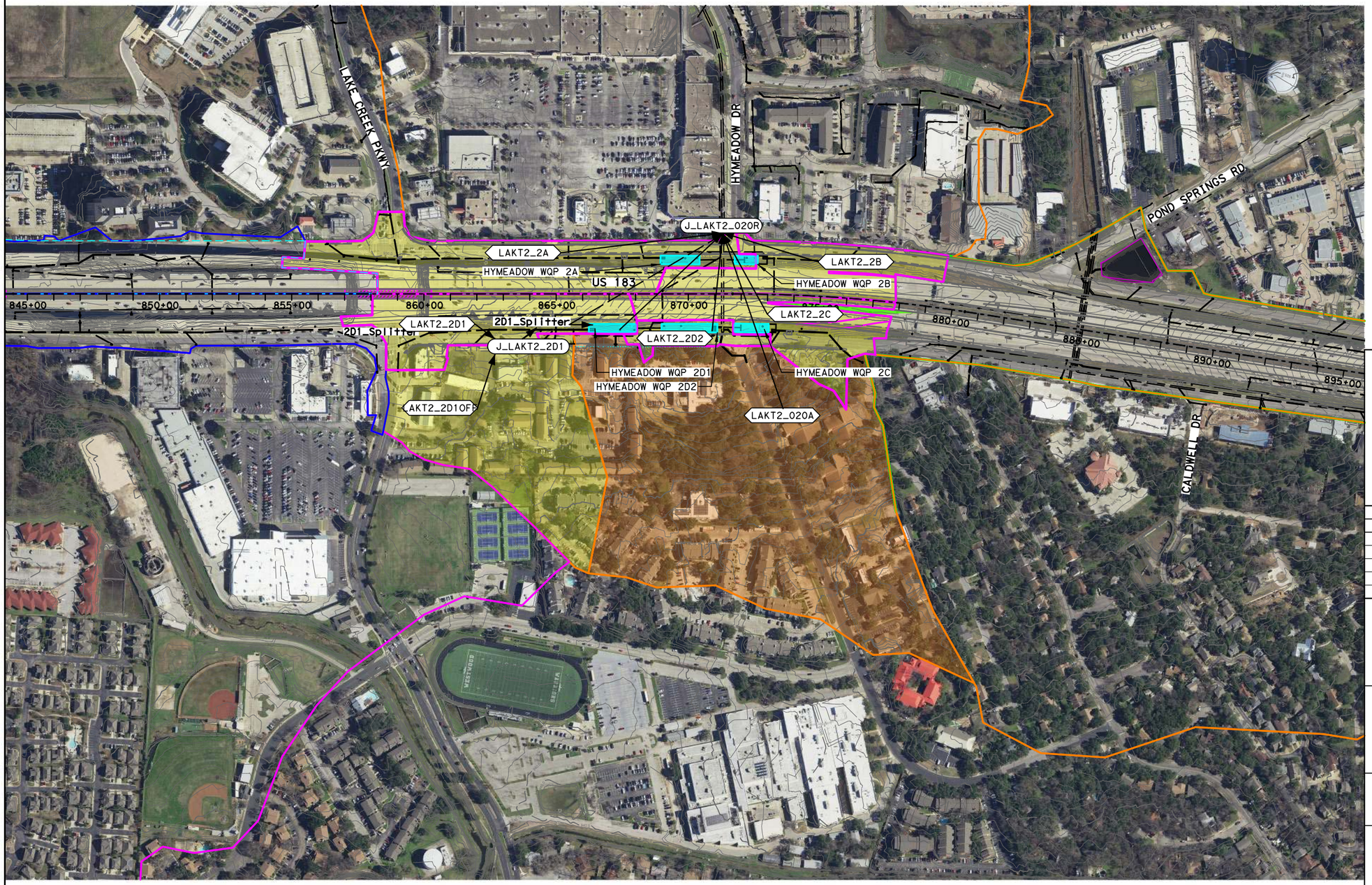

HORIZONTAL SCALE
0' 200' 400'

LEGEND

- OFFSITE BASIN DIVIDE
- ONSITE AREA
- WATER QUALITY POND
- BASIN AREA FLOWING TO WATER QUALITY POND
- WALT7000C — SUB-BASIN ID
- JWALT7020 — HYDRAULIC JUNCTION
- RWALT7010A — HYDRAULIC REACH

NOT FOR CONSTRUCTION

FOR REVIEW ONLY. NOT FOR PERMITTING, BIDDING, OR CONSTRUCTION.

ISSUE RECORD

NO.	DESCRIPTION	DATE
A	30% DESIGN	22SEP21
B	65% DESIGN	25FEB22
C	100% DESIGN	02SEP22

CENTRAL TEXAS REGIONAL MOBILITY AUTHORITY

GREAT HILLS CONSTRUCTORS

PARSONS
TBPE Registration No. F-1481

183 NORTH MOBILITY
SEGMENT 1A
DRAINAGE AREA MAP
BASIN B

DESIGNED	FED. RD. DIV. NO.		FEDERAL AID PROJECT NO.	HIGHWAY NO.
JH	6			US 183
DRAWN RG	STATE	DISTRICT	COUNTY	DRAWING
CHECKED TM	TEXAS	AUSTIN	TRAVIS, WILLIAMSON	1ADRMAPB
APPROVED	CONTROL	SECTION	JOB	SHEET NO.
	0151	06	143	

User: p002981G Date: 10/7/2022 Time: 1:19:30 PM Pen Table: 183N_Standard.tbl Plot Config: 183N PDF.pltcfg
File Name: 1A-DRMAP-B.dgn

BASIN C

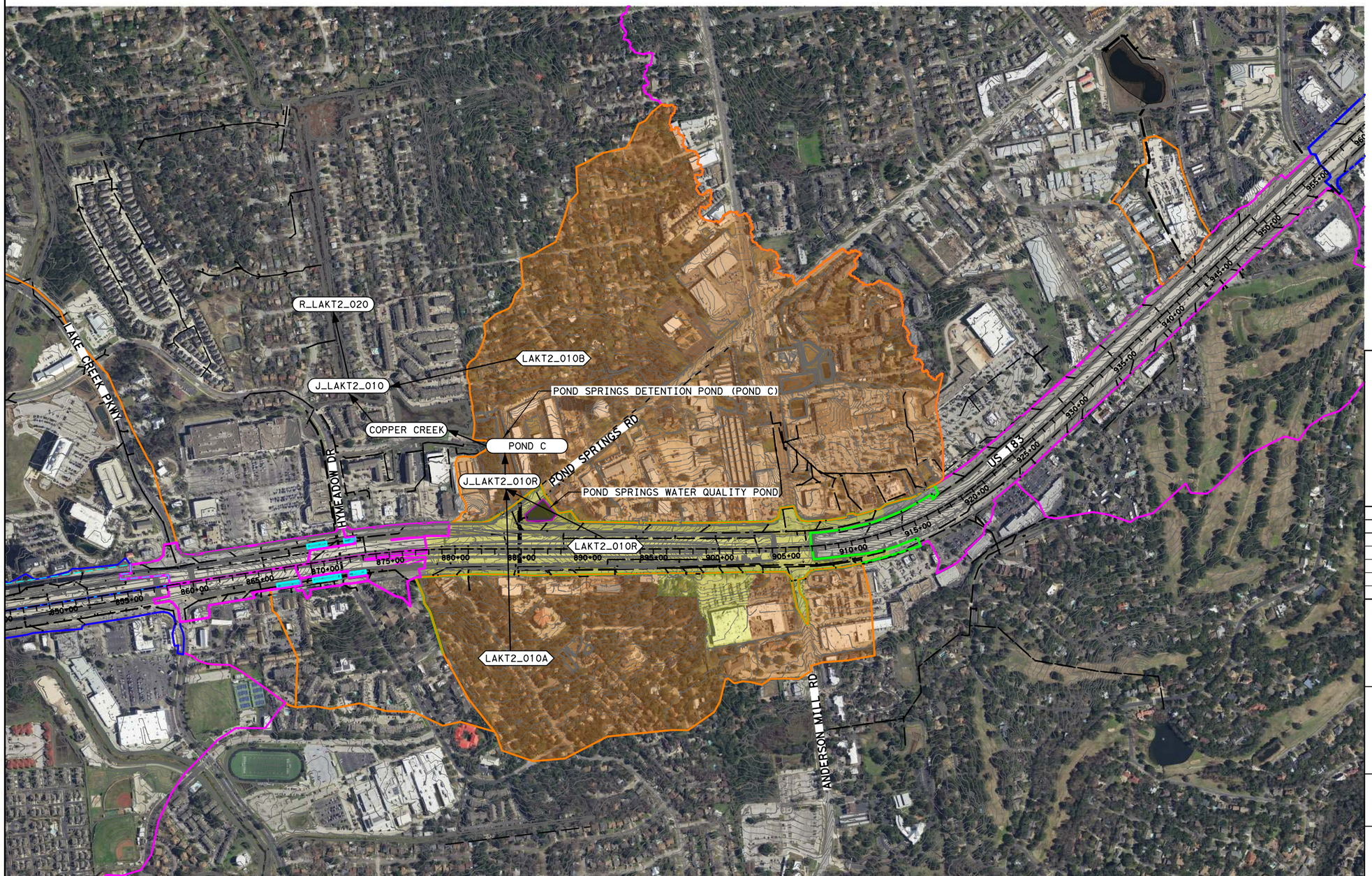

NOT FOR CONSTRUCTION

FOR REVIEW ONLY. NOT FOR PERMITTING, BIDDING, OR CONSTRUCTION.

ISSUE RECORD

NO.	DESCRIPTION	DATE
A	30% DESIGN	22SEP21
B	65% DESIGN	25FEB22
C	100% DESIGN	02SEP22

CENTRAL TEXAS REGIONAL MOBILITY AUTHORITY

GREAT HILLS CONSTRUCTORS

PARSONS
TBPE Registration No. F-1481

183 NORTH MOBILITY
SEGMENT 1A
DRAINAGE AREA MAP
BASIN C

DESIGNED	FED. RD. DIV. NO.		FEDERAL AID PROJECT NO.	HIGHWAY NO.
DF	6			US 183
DRAWN	STATE	DISTRICT	COUNTY	DRAWING
RG	TEXAS	AUSTIN	TRAVIS, WILLIAMSON	1ADRMAPC
CHECKED	CONTROL	SECTION	JOB	SHEET NO.
MM	0151	06	143	
APPROVED				
TM				

User: p002981G Date: 10/7/2022 Time: 1:24:00 PM Pen Table: 183N_Standard.tbl Plot Config: 183N PDF.pltcfg
File Name: 1A-DRMAP-C.dgn

BASIN D



HORIZONTAL SCALE
0' 400' 800'

LEGEND

- OFFSITE BASIN DIVIDE
- ONSITE AREA
- WATER QUALITY POND
- BASIN AREA FLOWING TO WATER QUALITY POND
- WALT7000C — SUB-BASIN ID
- JWALT7020 — HYDRAULIC JUNCTION
- RWALT7010A — HYDRAULIC REACH

NOT FOR CONSTRUCTION

FOR REVIEW ONLY. NOT FOR PERMITTING, BIDDING, OR CONSTRUCTION.

ISSUE RECORD

NO.	DESCRIPTION	DATE
A	30% DESIGN	22SEP21
B	65% DESIGN	25FEB22
C	100% DESIGN	02SEP22

CENTRAL TEXAS REGIONAL MOBILITY AUTHORITY

GREAT HILLS CONSTRUCTORS

PARSONS
TBPE Registration No. F-1481

183 NORTH MOBILITY
SEGMENT 1A
DRAINAGE AREA MAP
BASIN D

DESIGNED	FED. RD. DIV. NO.		FEDERAL AID PROJECT NO.	HIGHWAY NO.
DF	6			US 183
DRAWN	STATE	DISTRICT	COUNTY	DRAWING
RG	TEXAS	AUSTIN	TRAVIS, WILLIAMSON	1ADRMAPD
CHECKED	CONTROL	SECTION	JOB	SHEET NO.
MM				
APPROVED	0151	06	143	
TM				

User: p0029816 Date: 10/7/2022 Time: 1:29:49 PM Pen Table: 183N_Standard.tbl Plot Config: 183N PDF.pltcfg
File Name: 1A-DRMAP-D.dgn

APPENDIX E
PROPOSED PROJECT IMPERVIOUS AREA MAPS

BASIN A

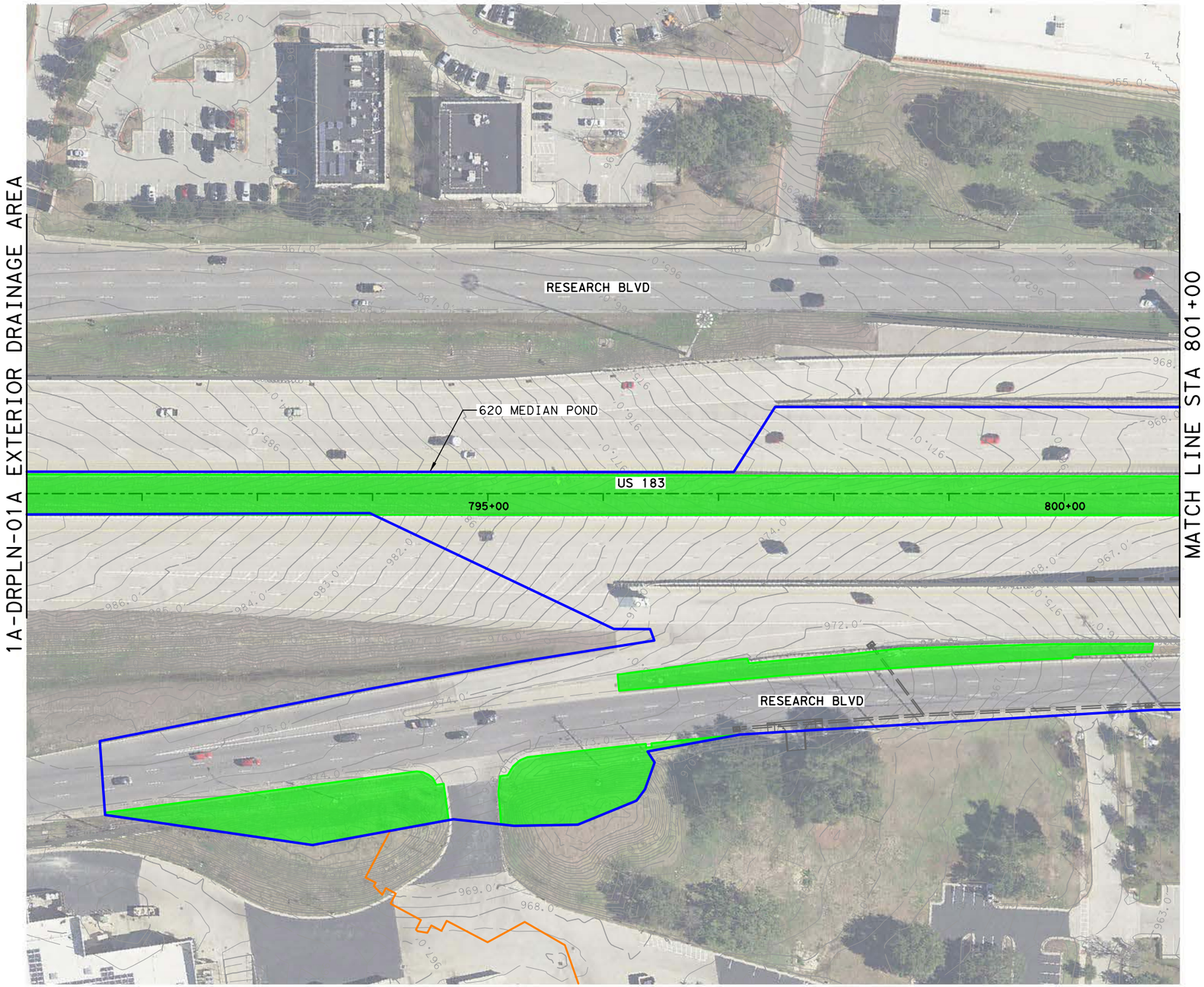

HORIZONTAL SCALE
0' 50' 100'

LEGEND

- OFFSET BASIN DIVIDE
- WATER QUALITY ONSITE AREA
- WATER QUALITY POND
- PROPOSED IMPERVIOUS AREA
- PROPOSED PERVIOUS AREA
- IMPERVIOUS AREA UNDER EXISTING BRIDGE
- IMPERVIOUS AREA UNDER PROPOSED BRIDGE
- WALT7000C — HEC HMS SUB-BASIN ID

NOT FOR CONSTRUCTION

FOR REVIEW ONLY. NOT FOR PERMITTING, BIDDING, OR CONSTRUCTION.

ISSUE RECORD

NO.	DESCRIPTION	DATE
A	30% DESIGN	22SEP21
B	65% DESIGN	25FEB22

CENTRAL TEXAS REGIONAL MOBILITY AUTHORITY

GREAT HILLS CONSTRUCTORS

PARSONS
TBPE Registration No. F-1481

183 NORTH MOBILITY
SEGMENT 1A
PROPOSED IMPERVIOUS AREA MAPS
STA BEGIN TO STA 801+00

DESIGNED	FED. RD. DIV. NO.		FEDERAL AID PROJECT NO.	HIGHWAY NO.
MM	6			US 183
DRAWN RG	STATE	DISTRICT	COUNTY	DRAWING
CHECKED MM	TEXAS	AUSTIN	TRAVIS, WILLIAMSON	1ADRIM01
APPROVED TM	CONTROL	SECTION	JOB	SHEET NO.
	0151	06	143	

User: p003822B Date: 2/25/2022 Time: 10:29:07 AM Pen Table: 183N_Standard.tbl Plot Config: 183N PDF.pltcfg
File Name: 1A-DRIM-01.dgn

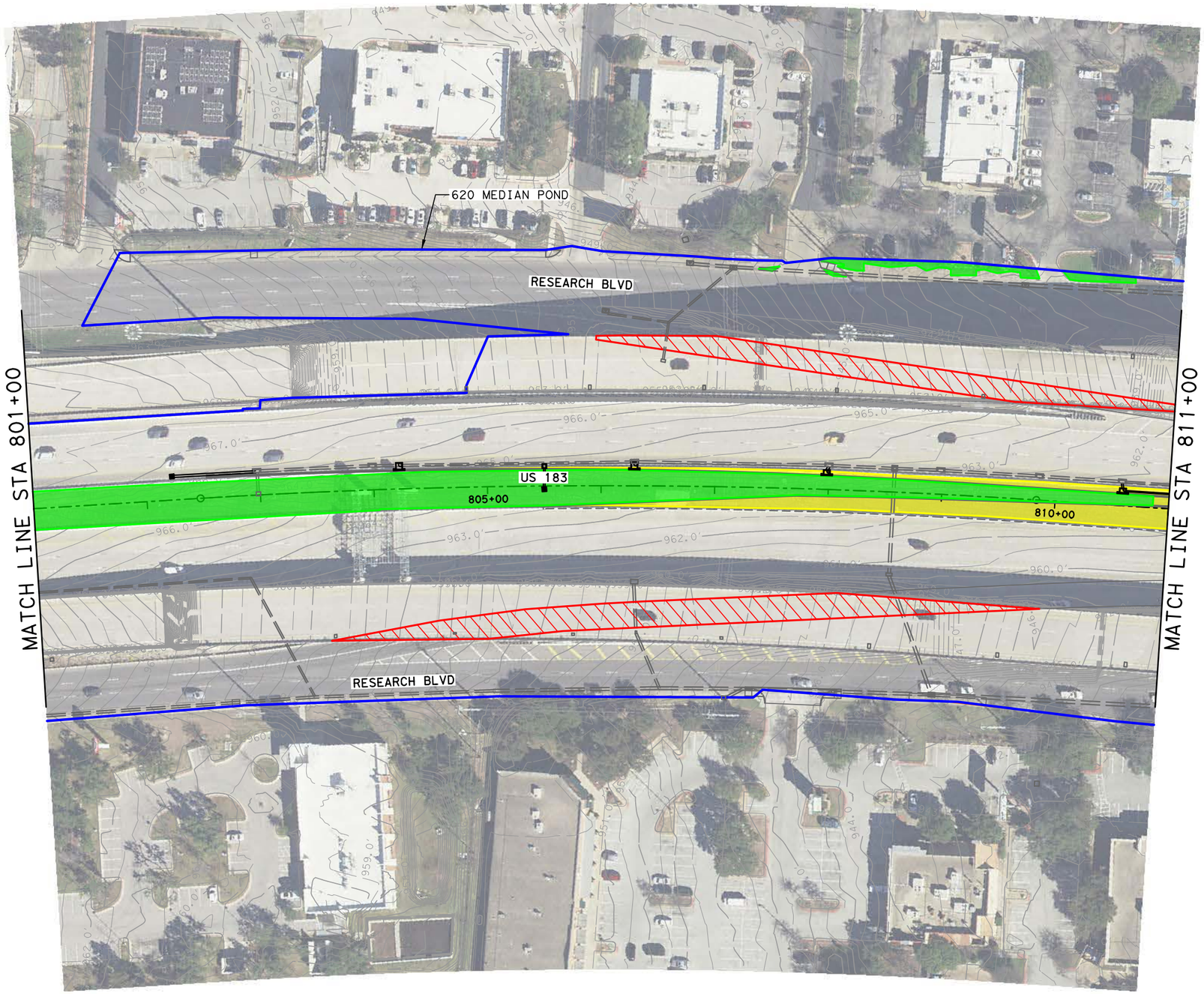

HORIZONTAL SCALE
0' 50' 100'

LEGEND

- OFFSET BASIN DIVIDE
- WATER QUALITY ONSITE AREA
- WATER QUALITY POND
- PROPOSED IMPERVIOUS AREA
- PROPOSED PERVIOUS AREA
- IMPERVIOUS AREA UNDER EXISTING BRIDGE
- IMPERVIOUS AREA UNDER PROPOSED BRIDGE
- WALT7000C — HEC HMS SUB-BASIN ID

NOT FOR CONSTRUCTION

FOR REVIEW ONLY. NOT FOR PERMITTING, BIDDING, OR CONSTRUCTION.

ISSUE RECORD

NO.	DESCRIPTION	DATE
A	30% DESIGN	22SEP21
B	65% DESIGN	25FEB22

CENTRAL TEXAS REGIONAL MOBILITY AUTHORITY

GREAT HILLS CONSTRUCTORS

PARSONS
TBPE Registration No. F-1481

183 NORTH MOBILITY
SEGMENT 1A
PROPOSED IMPERVIOUS AREA MAPS
STA 801+00 TO STA 811+00

DESIGNED	FED. RD. DIV. NO.		FEDERAL AID PROJECT NO.	HIGHWAY NO.
MM	6			US 183
DRAWN RG	STATE	DISTRICT	COUNTY	DRAWING
CHECKED MM	TEXAS	AUSTIN	TRAVIS, WILLIAMSON	1ADRIM02
APPROVED TM	CONTROL	SECTION	JOB	SHEET NO.
	0151	06	143	

User: p003822B Date: 2/25/2022 Time: 10:29:36 AM Pen Table: 183N_Standard.tbl Plot Config: 183N PDF.pltcfg
File Name: 1A-DRIM-02.dgn

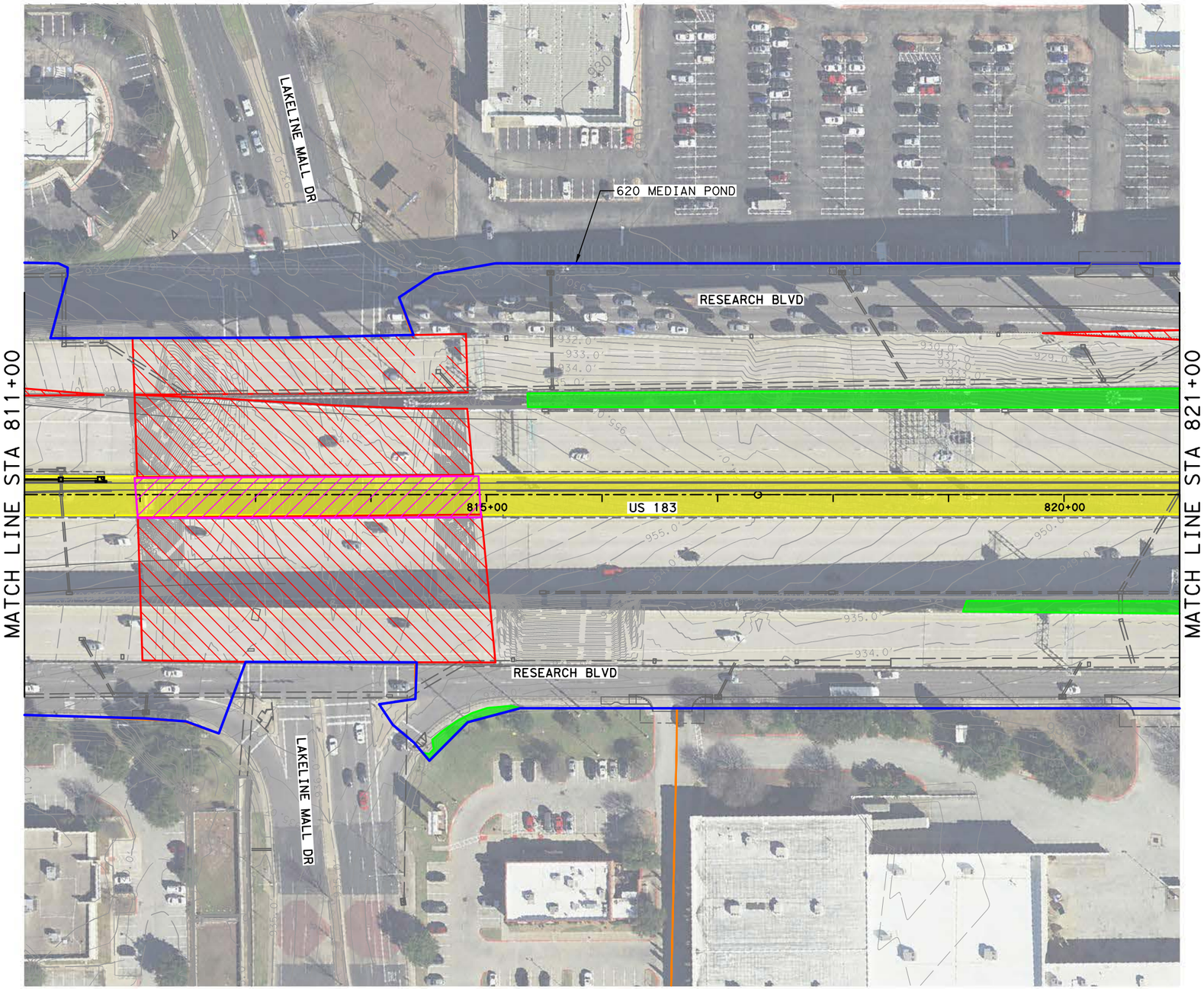

HORIZONTAL SCALE
0' 50' 100'

LEGEND

- OFFSET BASIN DIVIDE
- WATER QUALITY ONSITE AREA
- WATER QUALITY POND
- PROPOSED IMPERVIOUS AREA
- PROPOSED PERVIOUS AREA
- IMPERVIOUS AREA UNDER EXISTING BRIDGE
- IMPERVIOUS AREA UNDER PROPOSED BRIDGE
- WALT7000C HEC HMS SUB-BASIN ID

NOT FOR CONSTRUCTION

FOR REVIEW ONLY. NOT FOR PERMITTING, BIDDING, OR CONSTRUCTION.

ISSUE RECORD

NO.	DESCRIPTION	DATE
A	30% DESIGN	22SEP21
B	65% DESIGN	25FEB22

CENTRAL TEXAS REGIONAL MOBILITY AUTHORITY

GREAT HILLS CONSTRUCTORS

PARSONS
TBPE Registration No. F-1481

183 NORTH MOBILITY
SEGMENT 1A
PROPOSED IMPERVIOUS AREA MAPS
STA 811+00 TO STA 821+00

DESIGNED	FED. RD. DIV. NO.		FEDERAL AID PROJECT NO.	HIGHWAY NO.
MM	6			US 183
DRAWN	STATE	DISTRICT	COUNTY	DRAWING
RG	TEXAS	AUSTIN	TRAVIS, WILLIAMSON	1ADRIM03
CHECKED	CONTROL	SECTION	JOB	SHEET NO.
MM				
APPROVED	0151	06	143	
TM				

User: p003822B Date: 2/25/2022 Time: 10:30:04 AM Pen Table: 183N_Standard.tbl Plot Config: 183N PDF.pltcfg
File Name: 1A-DRIM-03.dgn

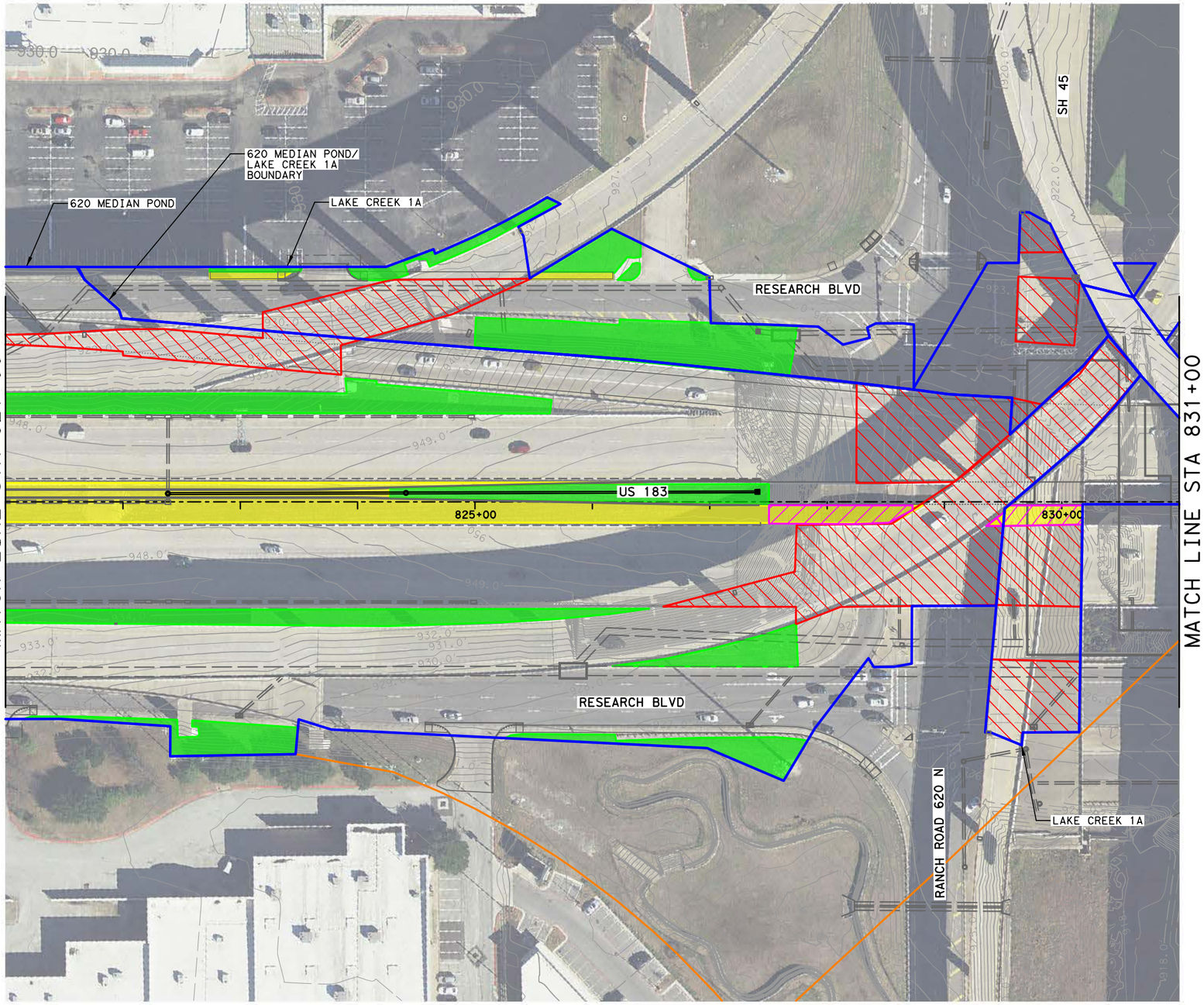

HORIZONTAL SCALE
0' 50' 100'

LEGEND

- OFFSET BASIN DIVIDE
- WATER QUALITY ONSITE AREA
- WATER QUALITY POND
- PROPOSED IMPERVIOUS AREA
- PROPOSED PERVIOUS AREA
- IMPERVIOUS AREA UNDER EXISTING BRIDGE
- IMPERVIOUS AREA UNDER PROPOSED BRIDGE
- WALT7000C — HEC HMS SUB-BASIN ID

NOT FOR CONSTRUCTION

FOR REVIEW ONLY. NOT FOR PERMITTING, BIDDING, OR CONSTRUCTION.

ISSUE RECORD		
NO.	DESCRIPTION	DATE
A	30% DESIGN	22SEP21
B	65% DESIGN	25FEB22

CENTRAL TEXAS REGIONAL MOBILITY AUTHORITY

GREAT HILLS CONSTRUCTORS

PARSONS
TBPE Registration No. F-1481

183 NORTH MOBILITY
SEGMENT 1A
PROPOSED IMPERVIOUS AREA MAPS
STA 821+00 TO STA 831+00

DESIGNED	FED. RD. DIV. NO.		FEDERAL AID PROJECT NO.	HIGHWAY NO.
MM	6			US 183
DRAWN	STATE	DISTRICT	COUNTY	DRAWING
RG	TEXAS	AUSTIN	TRAVIS, WILLIAMSON	1ADRIM04
CHECKED	CONTROL	SECTION	JOB	SHEET NO.
MM	0151	06	143	
APPROVED				
TM				

User: p003822B Date: 2/25/2022 Time: 10:30:40 AM Pen Table: 183N_Standard.tbl Plot Config: 183N PDF.pltcfg
File Name: 1A-DRIM-04.dgn

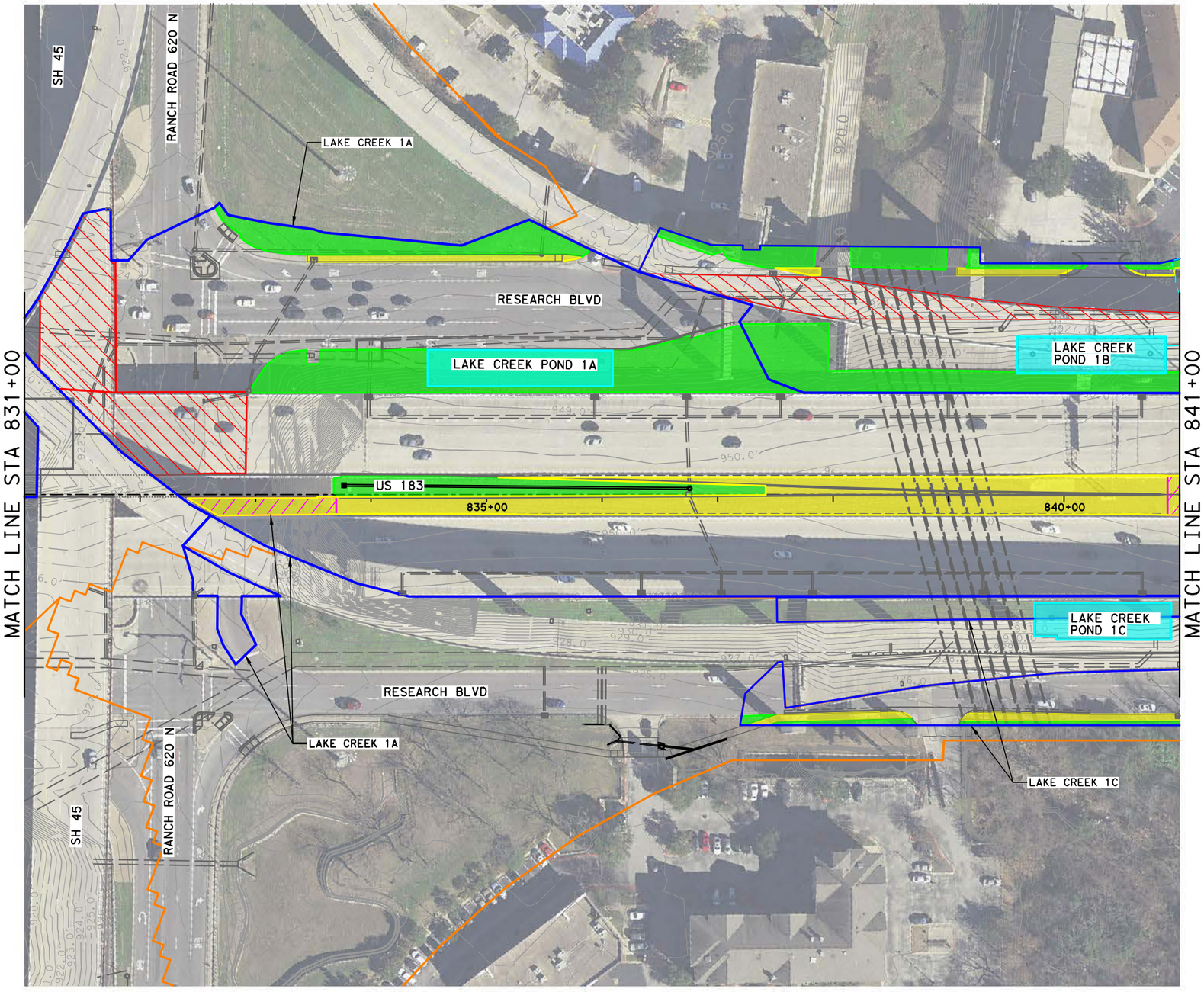

HORIZONTAL SCALE
0' 50' 100'

LEGEND

- OFFSET BASIN DIVIDE
- WATER QUALITY ONSITE AREA
- WATER QUALITY POND
- PROPOSED IMPERVIOUS AREA
- PROPOSED PERVIOUS AREA
- IMPERVIOUS AREA UNDER EXISTING BRIDGE
- IMPERVIOUS AREA UNDER PROPOSED BRIDGE
- WALT7000C — HEC HMS SUB-BASIN ID

NOT FOR CONSTRUCTION

FOR REVIEW ONLY. NOT FOR PERMITTING, BIDDING, OR CONSTRUCTION.

ISSUE RECORD

NO.	DESCRIPTION	DATE
A	30% DESIGN	22SEP21
B	65% DESIGN	25FEB22

CENTRAL TEXAS REGIONAL MOBILITY AUTHORITY

GREAT HILLS CONSTRUCTORS

PARSONS
TBPE Registration No. F-1481

183 NORTH MOBILITY
SEGMENT 1A
PROPOSED IMPERVIOUS AREA MAPS
STA 831+00 TO STA 841+00

DESIGNED	FED. RD. DIV. NO.		FEDERAL AID PROJECT NO.	HIGHWAY NO.
MM	6			US 183
DRAWN RG	STATE	DISTRICT	COUNTY	DRAWING
CHECKED MM	TEXAS	AUSTIN	TRAVIS, WILLIAMSON	1ADRIM05
APPROVED	CONTROL	SECTION	JOB	SHEET NO.
TM	0151	06	143	

User: p003822B Date: 2/25/2022 Time: 10:31:12 AM Pen Table: 183N_Standard.tbl Plot Config: 183N PDF.pltcfg
File Name: 1A-DRIM-05.dgn

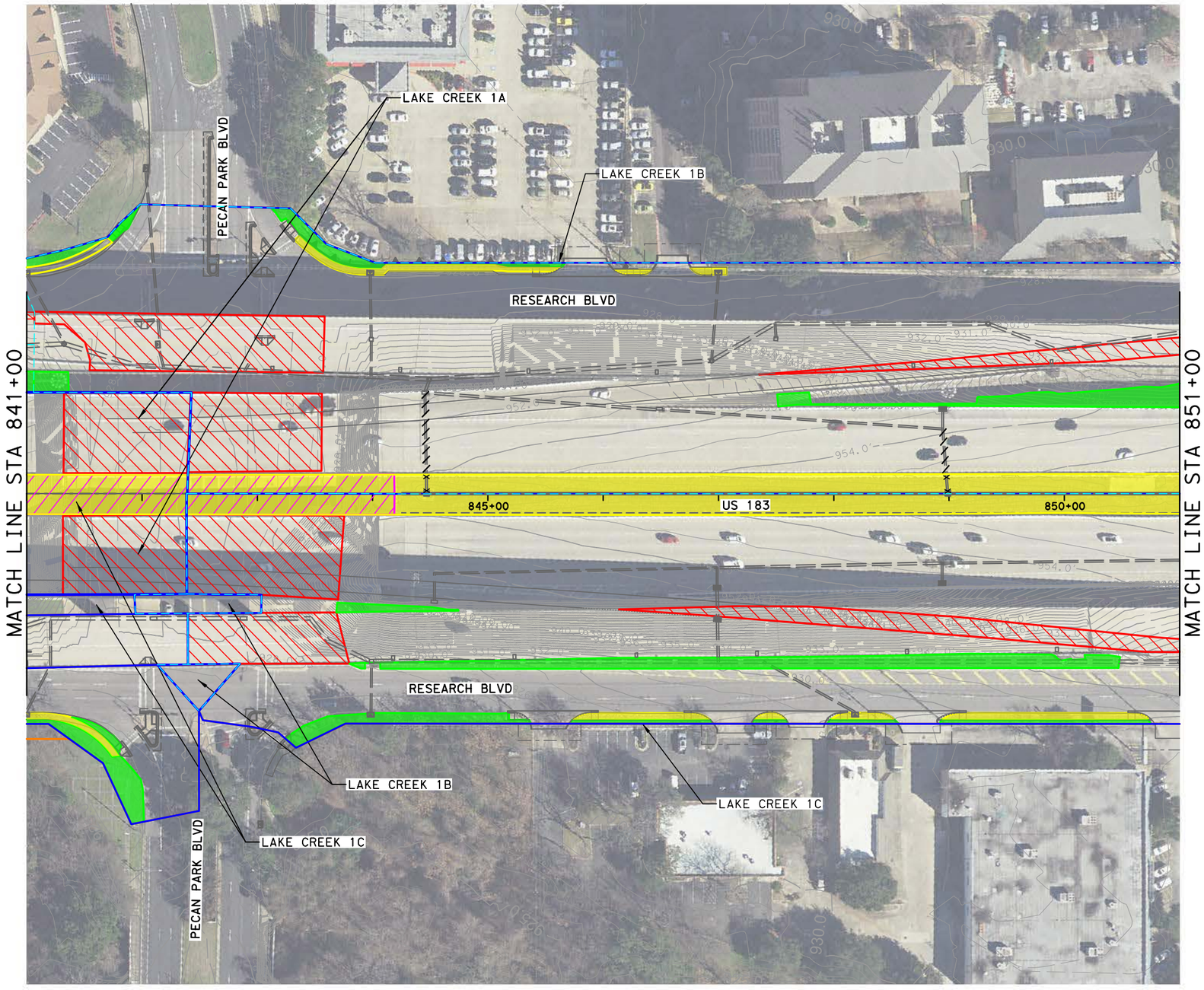

HORIZONTAL SCALE
0' 50' 100'

LEGEND

- OFFSET BASIN DIVIDE
- WATER QUALITY ONSITE AREA
- WATER QUALITY POND
- PROPOSED IMPERVIOUS AREA
- PROPOSED PERVIOUS AREA
- IMPERVIOUS AREA UNDER EXISTING BRIDGE
- IMPERVIOUS AREA UNDER PROPOSED BRIDGE
- WALT7000C — HEC HMS SUB-BASIN ID

NOT FOR CONSTRUCTION

FOR REVIEW ONLY. NOT FOR PERMITTING, BIDDING, OR CONSTRUCTION.

ISSUE RECORD

NO.	DESCRIPTION	DATE
A	30% DESIGN	22SEP21
B	65% DESIGN	25FEB22

CENTRAL TEXAS REGIONAL MOBILITY AUTHORITY

GREAT HILLS CONSTRUCTORS

PARSONS
TBPE Registration No. F-1481

183 NORTH MOBILITY
SEGMENT 1A
PROPOSED IMPERVIOUS AREA MAPS
STA 841+00 TO STA 851+00

DESIGNED	FED. RD. DIV. NO.		FEDERAL AID PROJECT NO.	HIGHWAY NO.
MM	6			US 183
DRAWN	STATE	DISTRICT	COUNTY	DRAWING
RG	TEXAS	AUSTIN	TRAVIS, WILLIAMSON	1ADRIM06
CHECKED	CONTROL	SECTION	JOB	SHEET NO.
MM	0151	06	143	
APPROVED				
TM				

User: p003822B Date: 2/25/2022 Time: 10:31:38 AM Pen Table: 183N_Standard.tbl Plot Config: 183N PDF.pltcfg
File Name: 1A-DRIM-06.dgn

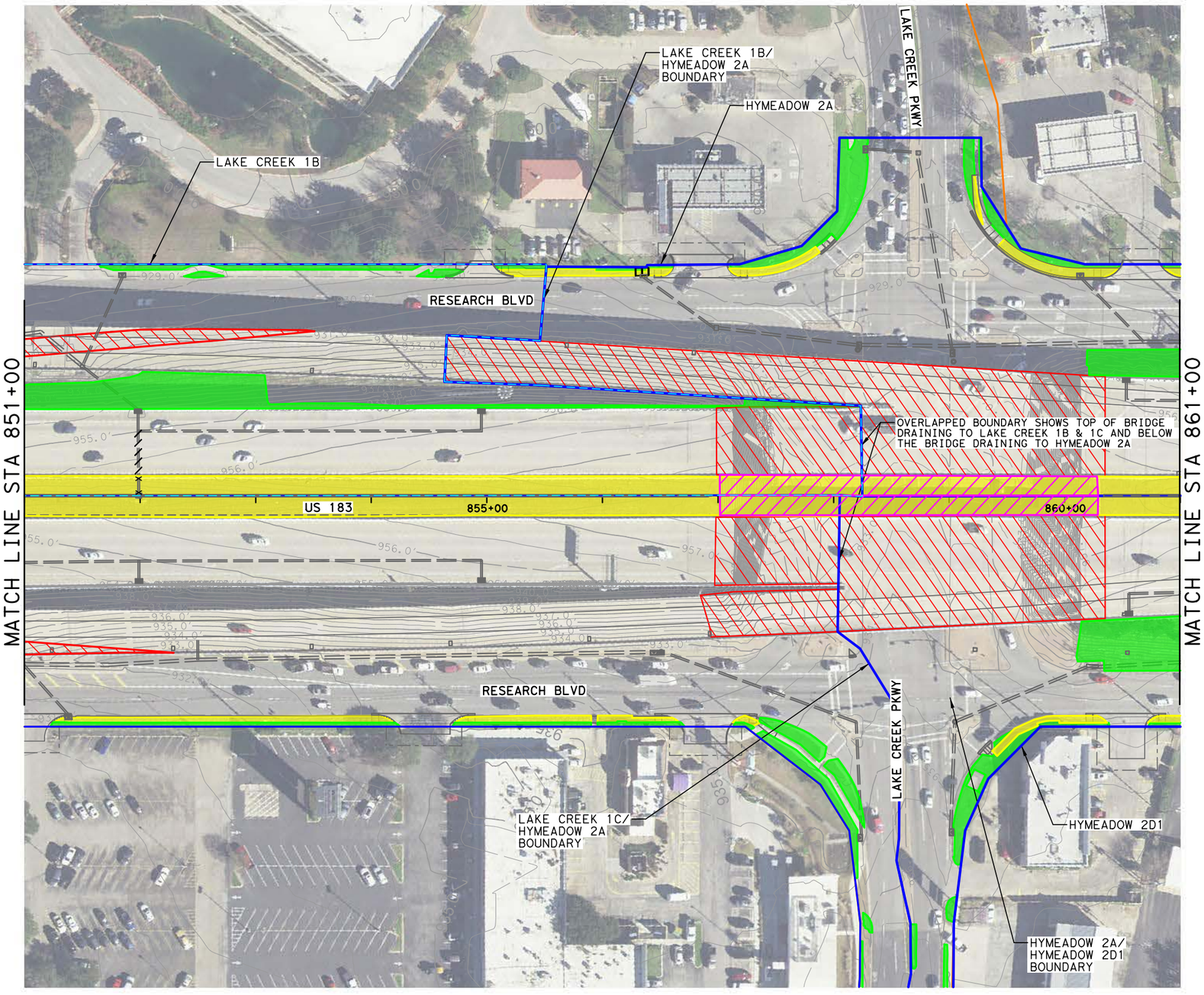

HORIZONTAL SCALE
0' 50' 100'

LEGEND

- OFFSET BASIN DIVIDE
- WATER QUALITY ONSITE AREA
- WATER QUALITY POND
- PROPOSED IMPERVIOUS AREA
- PROPOSED PERVIOUS AREA
- IMPERVIOUS AREA UNDER EXISTING BRIDGE
- IMPERVIOUS AREA UNDER PROPOSED BRIDGE
- WALT7000C — HEC HMS SUB-BASIN ID

NOT FOR CONSTRUCTION

FOR REVIEW ONLY. NOT FOR PERMITTING, BIDDING, OR CONSTRUCTION.

ISSUE RECORD

NO.	DESCRIPTION	DATE
A	30% DESIGN	22SEP21
B	65% DESIGN	25FEB22

CENTRAL TEXAS REGIONAL MOBILITY AUTHORITY

GREAT HILLS CONSTRUCTORS

PARSONS
TBPE Registration No. F-1481

183 NORTH MOBILITY
SEGMENT 1A
PROPOSED IMPERVIOUS AREA MAPS
STA 851+00 TO STA 861+00

DESIGNED	FED. RD. DIV. NO.		FEDERAL AID PROJECT NO.	HIGHWAY NO.
MM	6			US 183
DRAWN	STATE	DISTRICT	COUNTY	DRAWING
RG	TEXAS	AUSTIN	TRAVIS, WILLIAMSON	1ADRIM07
CHECKED	CONTROL	SECTION	JOB	SHEET NO.
MM	0151	06	143	
APPROVED				
TM				

User: p003822B Date: 2/25/2022 Time: 10:32:07 AM Pen Table: 183N_Standard.tbl Plot Config: 183N PDF.pltcfg
File Name: 1A-DRIM-07.dgn

BASIN B

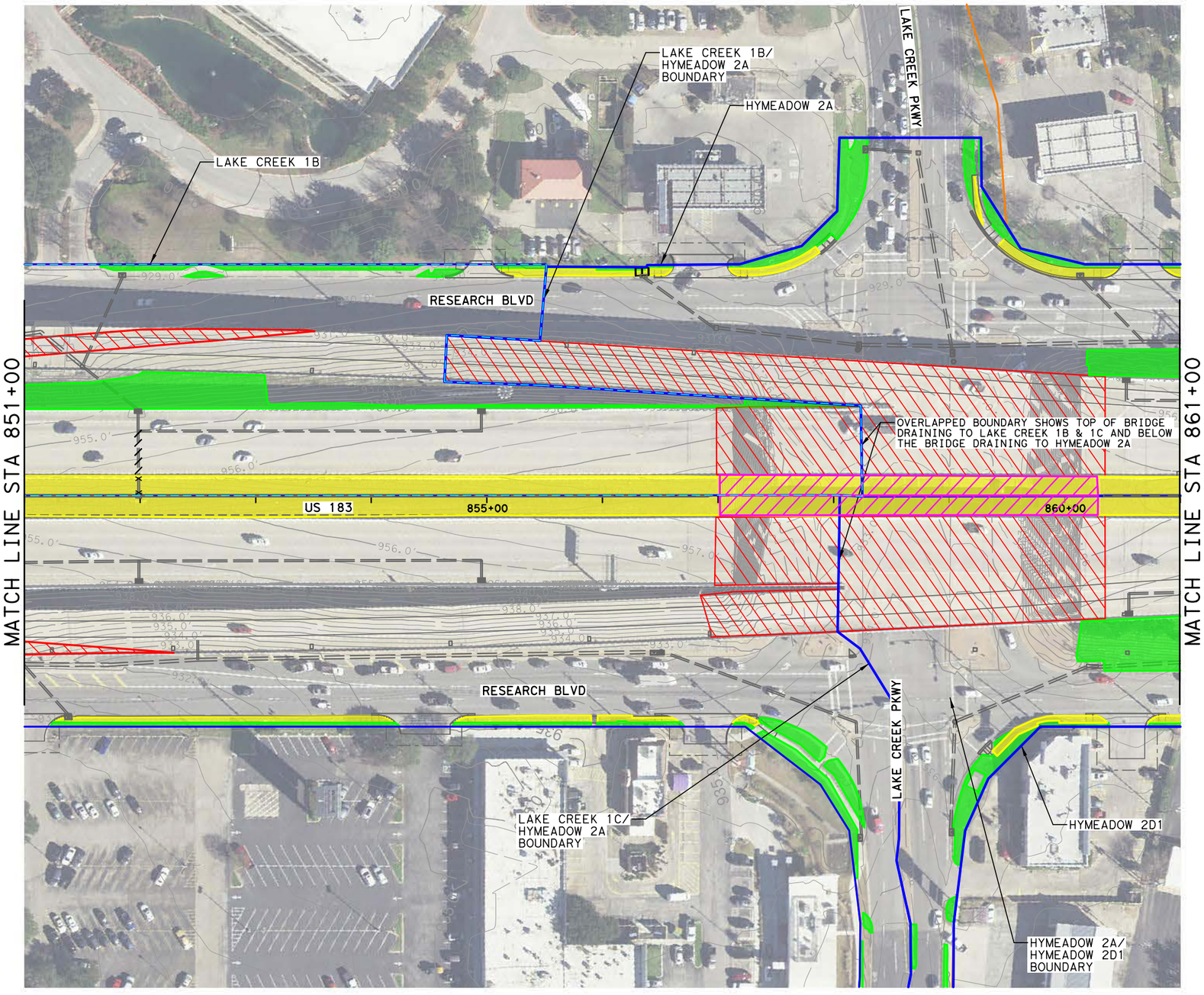

HORIZONTAL SCALE
0' 50' 100'

LEGEND

- OFFSET BASIN DIVIDE
- WATER QUALITY ONSITE AREA
- WATER QUALITY POND
- PROPOSED IMPERVIOUS AREA
- PROPOSED PERVIOUS AREA
- IMPERVIOUS AREA UNDER EXISTING BRIDGE
- IMPERVIOUS AREA UNDER PROPOSED BRIDGE
- WALT7000C — HEC HMS SUB-BASIN ID

NOT FOR CONSTRUCTION

FOR REVIEW ONLY. NOT FOR PERMITTING, BIDDING, OR CONSTRUCTION.

ISSUE RECORD

NO.	DESCRIPTION	DATE
A	30% DESIGN	22SEP21
B	65% DESIGN	25FEB22

CENTRAL TEXAS REGIONAL MOBILITY AUTHORITY

GREAT HILLS CONSTRUCTORS

PARSONS
TBPE Registration No. F-1481

183 NORTH MOBILITY
SEGMENT 1A
PROPOSED IMPERVIOUS AREA MAPS
STA 851+00 TO STA 861+00

DESIGNED	FED. RD. DIV. NO.		FEDERAL AID PROJECT NO.	HIGHWAY NO.
MM	6			US 183
DRAWN	STATE	DISTRICT	COUNTY	DRAWING
RG	TEXAS	AUSTIN	TRAVIS, WILLIAMSON	1ADRIM07
CHECKED	CONTROL	SECTION	JOB	SHEET NO.
MM	0151	06	143	
APPROVED				
TM				

User: p003822B Date: 2/25/2022 Time: 10:32:07 AM Pen Table: 183N_Standard.tbl Plot Config: 183N PDF.pltcfg
File Name: 1A-DRIM-07.dgn

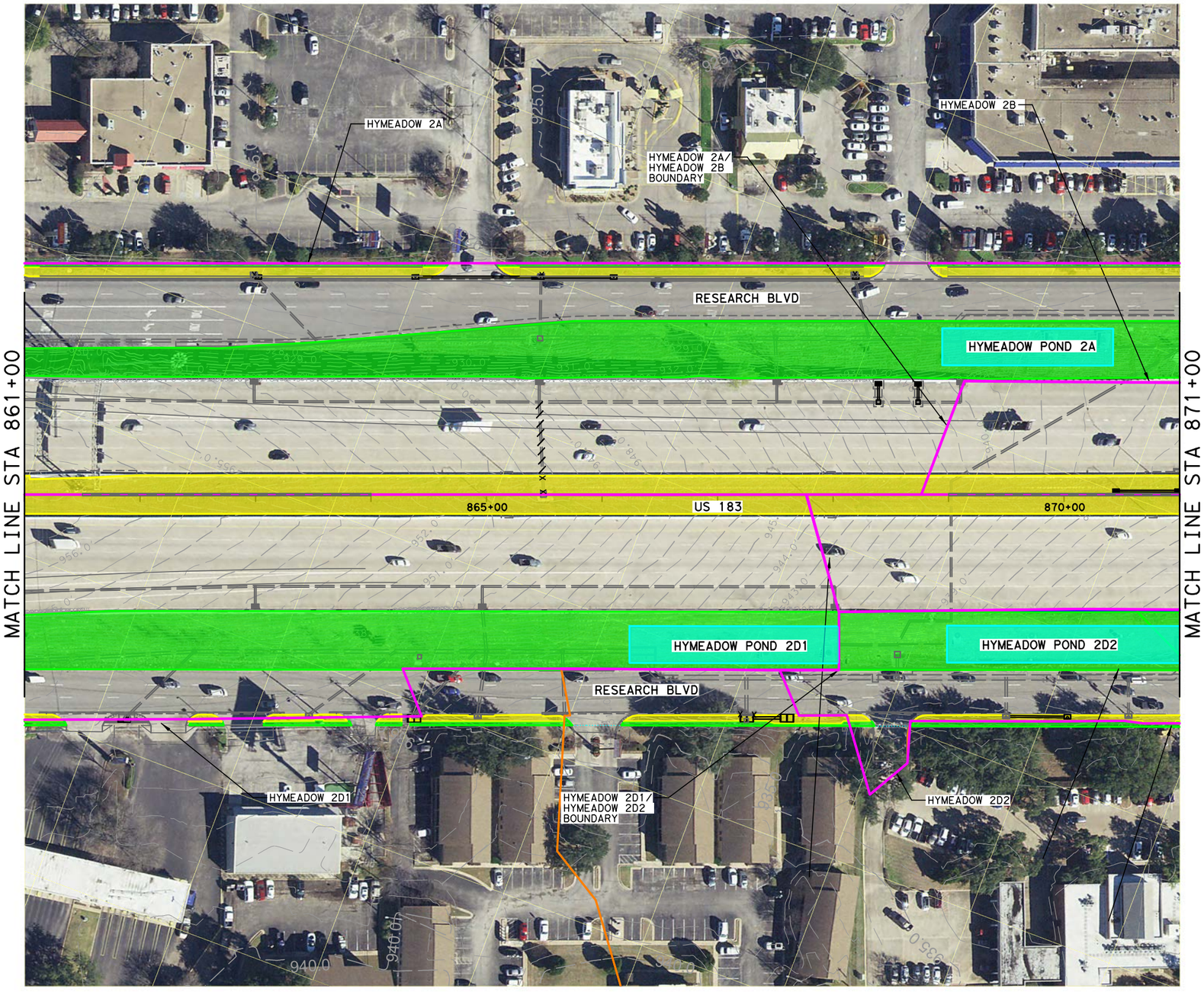

HORIZONTAL SCALE
0' 50' 100'

LEGEND

- OFFSET BASIN DIVIDE
- WATER QUALITY ONSITE AREA
- WATER QUALITY POND
- PROPOSED IMPERVIOUS AREA
- PROPOSED PERVIOUS AREA
- IMPERVIOUS AREA UNDER EXISTING BRIDGE
- IMPERVIOUS AREA UNDER PROPOSED BRIDGE
- WALT7000C — HEC HMS SUB-BASIN ID

NOT FOR CONSTRUCTION

FOR REVIEW ONLY. NOT FOR PERMITTING, BIDDING, OR CONSTRUCTION.

ISSUE RECORD

NO.	DESCRIPTION	DATE
A	30% DESIGN	22SEP21
B	65% DESIGN	25FEB22

CENTRAL TEXAS REGIONAL MOBILITY AUTHORITY

GREAT HILLS CONSTRUCTORS

PARSONS
TBPE Registration No. F-1481

183 NORTH MOBILITY
SEGMENT 1A
PROPOSED IMPERVIOUS AREA MAPS
STA 861+00 TO STA 871+00

DESIGNED	FED. RD. DIV. NO.		FEDERAL AID PROJECT NO.	HIGHWAY NO.
MM	6			US 183
DRAWN	STATE	DISTRICT	COUNTY	DRAWING
RG	TEXAS	AUSTIN	TRAVIS, WILLIAMSON	1ADRIM08
CHECKED	CONTROL	SECTION	JOB	SHEET NO.
MM	0151	06	143	
APPROVED				
TM				

User: p0029816 Date: 10/7/2022 Time: 1:45:31 PM Pen Table: 183N_Standard.tbl Plot Config: 183N PDF.pltcfg
File Name: 1A-DRIM-08.dgn



HORIZONTAL SCALE
0' 50' 100'

LEGEND

- OFFSET BASIN DIVIDE
- WATER QUALITY ONSITE AREA
- WATER QUALITY POND
- PROPOSED IMPERVIOUS AREA
- PROPOSED PERVIOUS AREA
- IMPERVIOUS AREA UNDER EXISTING BRIDGE
- IMPERVIOUS AREA UNDER PROPOSED BRIDGE
- WALT7000C — HEC HMS SUB-BASIN ID

NOT FOR CONSTRUCTION

FOR REVIEW ONLY. NOT FOR PERMITTING, BIDDING, OR CONSTRUCTION.

ISSUE RECORD		
NO.	DESCRIPTION	DATE
A	30% DESIGN	22SEP21
B	65% DESIGN	25FEB22

CENTRAL TEXAS REGIONAL MOBILITY AUTHORITY

GREAT HILLS CONSTRUCTORS

PARSONS
TBPE Registration No. F-1481

183 NORTH MOBILITY
SEGMENT 1A
PROPOSED IMPERVIOUS AREA MAPS
STA 871+00 TO STA 881+00

DESIGNED	FED. RD. DIV. NO.		FEDERAL AID PROJECT NO.	HIGHWAY NO.
MM	6			US 183
DRAWN RG	STATE	DISTRICT	COUNTY	DRAWING
CHECKED MM	TEXAS	AUSTIN	TRAVIS, WILLIAMSON	1ADRIM09
APPROVED TM	CONTROL	SECTION	JOB	SHEET NO.
	0151	06	143	

User: p002981G Date: 10/7/2022 Time: 2:02:01 PM Pen Table: 183N_Standard.tbl Plot Config: 183N PDF.pltcfg
File Name: 1A-DRIM-09.dgn

BASIN C



HORIZONTAL SCALE
0' 50' 100'

LEGEND

- OFFSET BASIN DIVIDE
- WATER QUALITY ONSITE AREA
- WATER QUALITY POND
- PROPOSED IMPERVIOUS AREA
- PROPOSED PERVIOUS AREA
- IMPERVIOUS AREA UNDER EXISTING BRIDGE
- IMPERVIOUS AREA UNDER PROPOSED BRIDGE
- WALT7000C — HEC HMS SUB-BASIN ID

NOT FOR CONSTRUCTION

FOR REVIEW ONLY. NOT FOR PERMITTING, BIDDING, OR CONSTRUCTION.

ISSUE RECORD		
NO.	DESCRIPTION	DATE
A	30% DESIGN	22SEP21
B	65% DESIGN	25FEB22

CENTRAL TEXAS REGIONAL MOBILITY AUTHORITY

GREAT HILLS CONSTRUCTORS

PARSONS
TBPE Registration No. F-1481

183 NORTH MOBILITY
SEGMENT 1A
PROPOSED IMPERVIOUS AREA MAPS
STA 871+00 TO STA 881+00

DESIGNED	FED. RD. DIV. NO.		FEDERAL AID PROJECT NO.	HIGHWAY NO.
MM	6			US 183
DRAWN RG	STATE	DISTRICT	COUNTY	DRAWING
CHECKED MM	TEXAS	AUSTIN	TRAVIS, WILLIAMSON	1ADRIM09
APPROVED TM	CONTROL	SECTION	JOB	SHEET NO.
	0151	06	143	

User: p002981G Date: 10/7/2022 Time: 2:02:01 PM Pen Table: 183N_Standard.tbl Plot Config: 183N PDF.pltcfg
File Name: 1A-DRIM-09.dgn

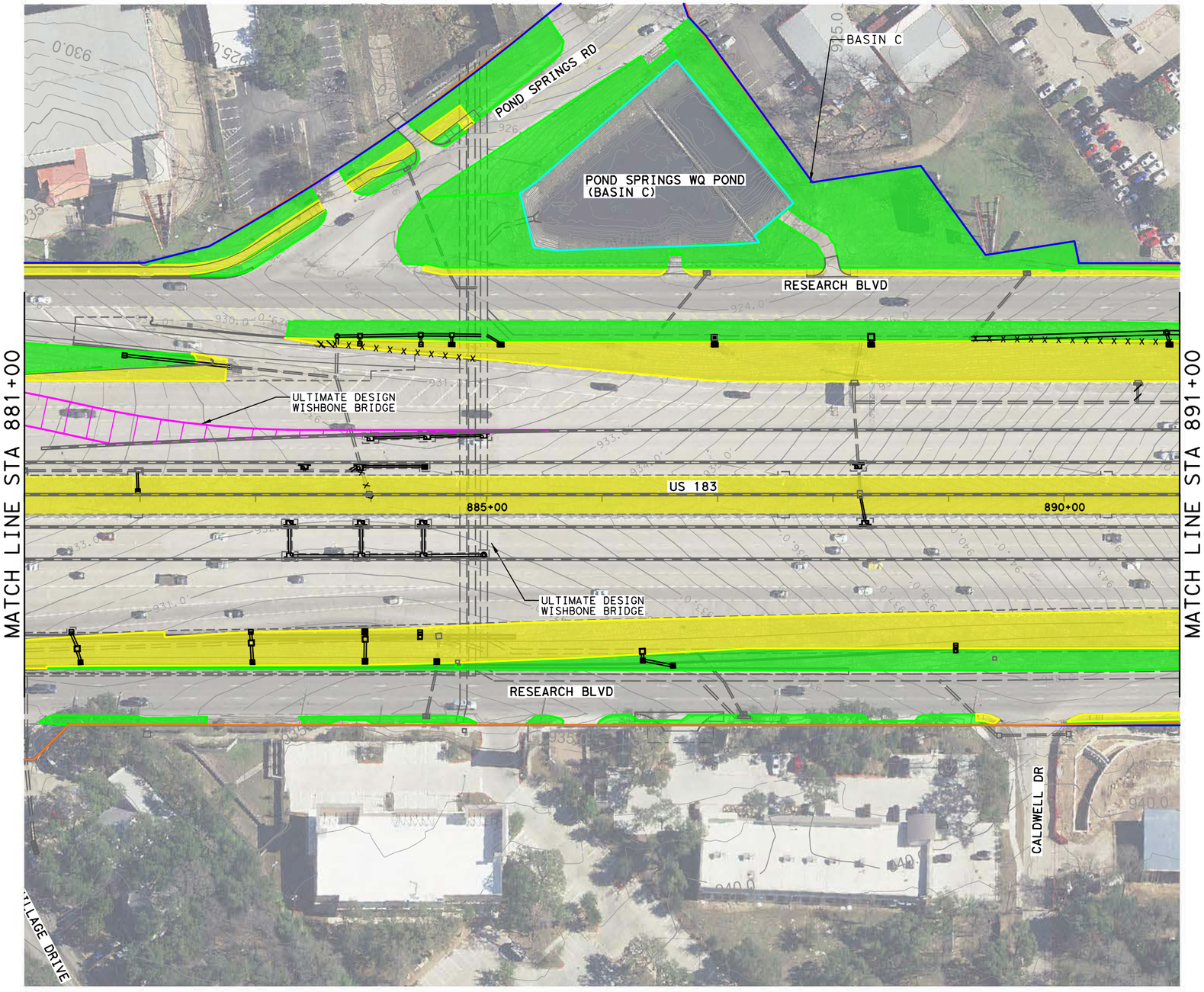

HORIZONTAL SCALE
0' 50' 100'

LEGEND

- OFFSET BASIN DIVIDE
- WATER QUALITY ONSITE AREA
- WATER QUALITY POND
- PROPOSED IMPERVIOUS AREA
- PROPOSED PERVIOUS AREA
- IMPERVIOUS AREA UNDER EXISTING BRIDGE
- IMPERVIOUS AREA UNDER PROPOSED BRIDGE
- WALT7000C — HEC HMS SUB-BASIN ID

NOT FOR CONSTRUCTION

FOR REVIEW ONLY. NOT FOR PERMITTING, BIDDING, OR CONSTRUCTION.

ISSUE RECORD

NO.	DESCRIPTION	DATE
A	30% DESIGN	22SEP21
B	65% DESIGN	25FEB22

CENTRAL TEXAS REGIONAL MOBILITY AUTHORITY

GREAT HILLS CONSTRUCTORS

PARSONS
TBPE Registration No. F-1481

183 NORTH MOBILITY
SEGMENT 1A
PROPOSED IMPERVIOUS AREA MAPS
STA 881+00 TO STA 891+00

DESIGNED	FED. RD. DIV. NO.		FEDERAL AID PROJECT NO.	HIGHWAY NO.
MM	6			US 183
DRAWN	STATE	DISTRICT	COUNTY	DRAWING
RG	TEXAS	AUSTIN	TRAVIS, WILLIAMSON	1ADRIM10
CHECKED	CONTROL	SECTION	JOB	SHEET NO.
MM	0151	06	143	
APPROVED				
TM				

User: p003822B Date: 2/25/2022 Time: 10:33:36 AM Pen Table: 183N_Standard.tbl Plot Config: 183N PDF.pltcfg
File Name: 1A-DRIM-10.dgn

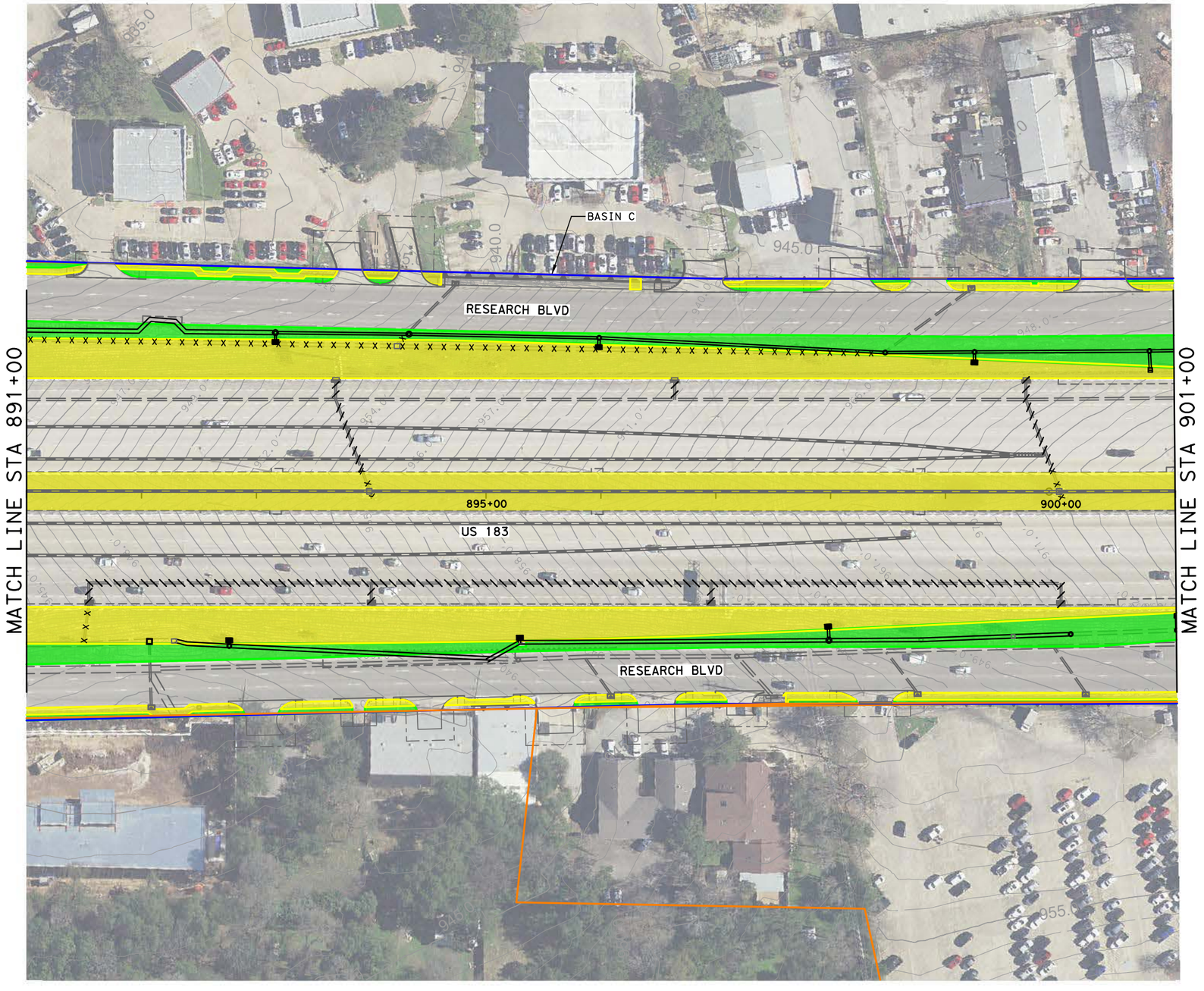

HORIZONTAL SCALE
0' 50' 100'

LEGEND

- OFFSET BASIN DIVIDE
- WATER QUALITY ONSITE AREA
- WATER QUALITY POND
- PROPOSED IMPERVIOUS AREA
- PROPOSED PERVIOUS AREA
- IMPERVIOUS AREA UNDER EXISTING BRIDGE
- IMPERVIOUS AREA UNDER PROPOSED BRIDGE
- WALT7000C — HEC HMS SUB-BASIN ID

NOT FOR CONSTRUCTION

FOR REVIEW ONLY. NOT FOR PERMITTING, BIDDING, OR CONSTRUCTION.

ISSUE RECORD

NO.	DESCRIPTION	DATE
A	30% DESIGN	22SEP21
B	65% DESIGN	25FEB22

CENTRAL TEXAS REGIONAL MOBILITY AUTHORITY

GREAT HILLS CONSTRUCTORS

PARSONS
TBPE Registration No. F-1481

183 NORTH MOBILITY
SEGMENT 1A
PROPOSED IMPERVIOUS AREA MAPS
STA 891+00 TO STA 901+00

DESIGNED	FED. RD. DIV. NO.		FEDERAL AID PROJECT NO.	HIGHWAY NO.
MM	6			US 183
DRAWN	STATE	DISTRICT	COUNTY	DRAWING
RG	TEXAS	AUSTIN	TRAVIS, WILLIAMSON	1ADRIM11
CHECKED	CONTROL	SECTION	JOB	SHEET NO.
MM	0151	06	143	
APPROVED				
TM				

User: p003822B Date: 2/25/2022 Time: 10:34:03 AM Pen Table: 183N_Standard.tbl Plot Config: 183N PDF.pltcfg
File Name: 1A-DRIM-11.dgn

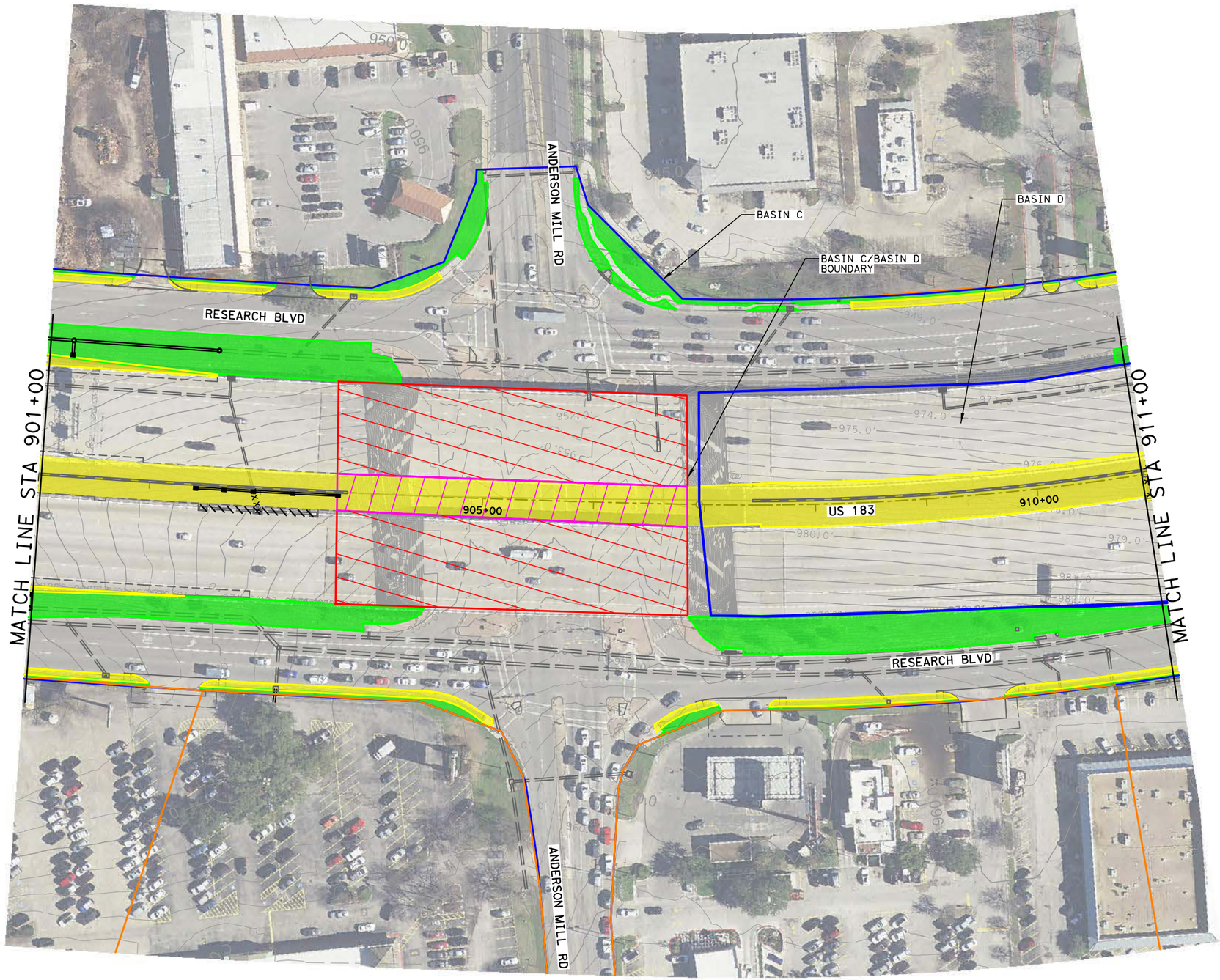

HORIZONTAL SCALE
0′ 50′ 100′

LEGEND

- OFFSET BASIN DIVIDE
- WATER QUALITY ONSITE AREA
- WATER QUALITY POND
- PROPOSED IMPERVIOUS AREA
- PROPOSED PERVIOUS AREA
- IMPERVIOUS AREA UNDER EXISTING BRIDGE
- IMPERVIOUS AREA UNDER PROPOSED BRIDGE
- WALT7000C — HEC HMS SUB-BASIN ID

NOT FOR CONSTRUCTION

FOR REVIEW ONLY. NOT FOR PERMITTING, BIDDING, OR CONSTRUCTION.

ISSUE RECORD

NO.	DESCRIPTION	DATE
A	30% DESIGN	22SEP21
B	65% DESIGN	25FEB22

CENTRAL TEXAS REGIONAL MOBILITY AUTHORITY

GREAT HILLS CONSTRUCTORS

PARSONS
TBPE Registration No. F-1481

183 NORTH MOBILITY
SEGMENT 1A
PROPOSED IMPERVIOUS AREA MAPS
STA 901+00 TO STA 911+00

DESIGNED	FED. RD. DIV. NO.		FEDERAL AID PROJECT NO.	HIGHWAY NO.
MM	6			US 183
DRAWN	STATE	DISTRICT	COUNTY	DRAWING
RG	TEXAS	AUSTIN	TRAVIS, WILLIAMSON	1ADRIM12
CHECKED	CONTROL	SECTION	JOB	SHEET NO.
MM	0151	06	143	
APPROVED				
TM				

User: p003822B Date: 2/25/2022 Time: 10:34:31 AM Pen Table: 183N_Standard.tbl Plot Config: 183N PDF.pltcfg
File Name: 1A-DRIM-12.dgn

BASIN D

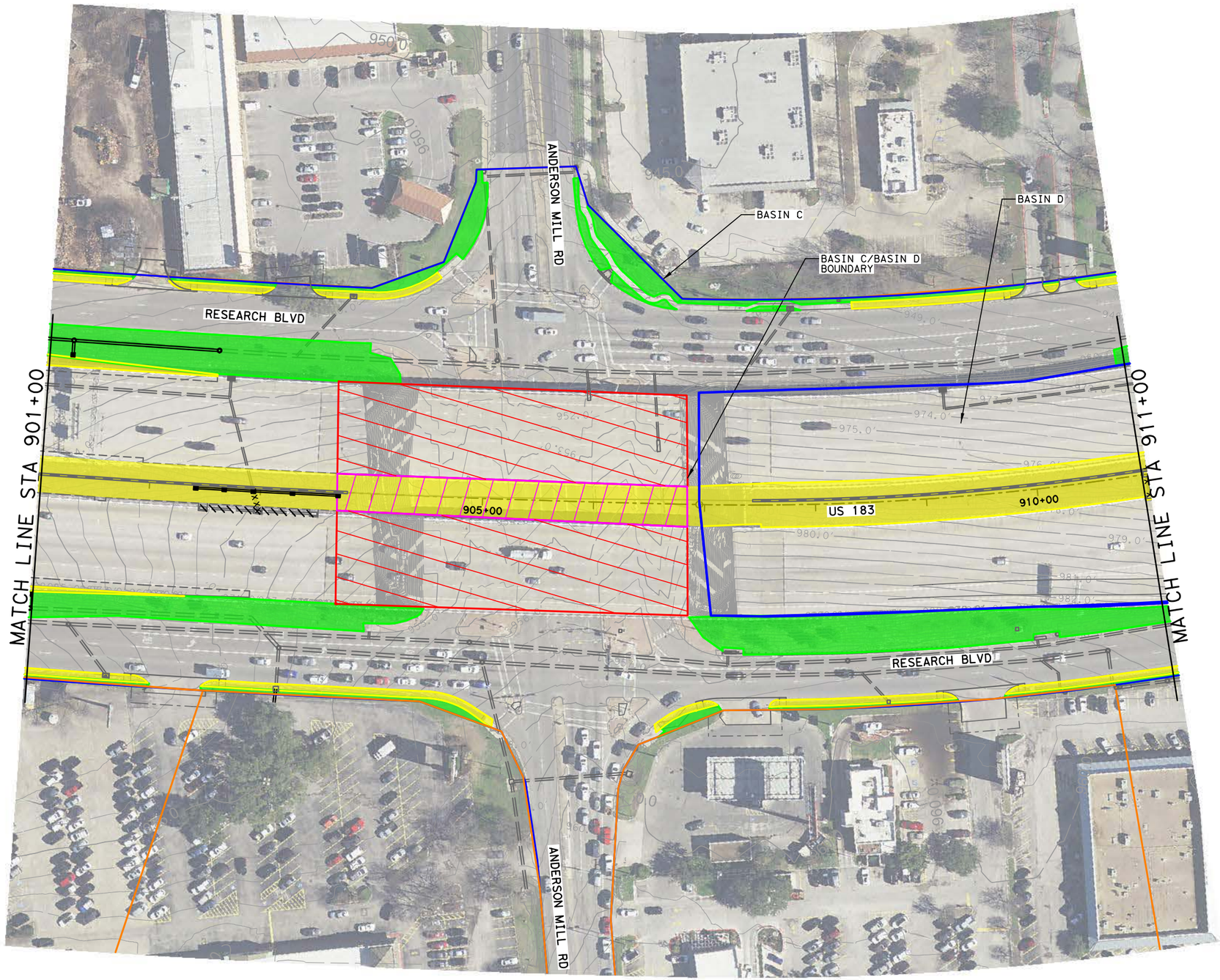

HORIZONTAL SCALE
0′ 50′ 100′

LEGEND

- OFFSET BASIN DIVIDE
- WATER QUALITY ONSITE AREA
- WATER QUALITY POND
- PROPOSED IMPERVIOUS AREA
- PROPOSED PERVIOUS AREA
- IMPERVIOUS AREA UNDER EXISTING BRIDGE
- IMPERVIOUS AREA UNDER PROPOSED BRIDGE
- WALT7000C — HEC HMS SUB-BASIN ID

NOT FOR CONSTRUCTION

FOR REVIEW ONLY. NOT FOR PERMITTING, BIDDING, OR CONSTRUCTION.

ISSUE RECORD

NO.	DESCRIPTION	DATE
A	30% DESIGN	22SEP21
B	65% DESIGN	25FEB22

CENTRAL TEXAS REGIONAL MOBILITY AUTHORITY

GREAT HILLS CONSTRUCTORS

PARSONS
TBPE Registration No. F-1481

183 NORTH MOBILITY
SEGMENT 1A
PROPOSED IMPERVIOUS AREA MAPS
STA 901+00 TO STA 911+00

DESIGNED	FED. RD. DIV. NO.		FEDERAL AID PROJECT NO.	HIGHWAY NO.
MM	6			US 183
DRAWN	STATE	DISTRICT	COUNTY	DRAWING
RG	TEXAS	AUSTIN	TRAVIS, WILLIAMSON	1ADRIM12
CHECKED	CONTROL	SECTION	JOB	SHEET NO.
MM	0151	06	143	
APPROVED				
TM				

User: p003822B Date: 2/25/2022 Time: 10:34:31 AM Pen Table: 183N_Standard.tbl Plot Config: 183N PDF.pltcfg
File Name: 1A-DRIM-12.dgn

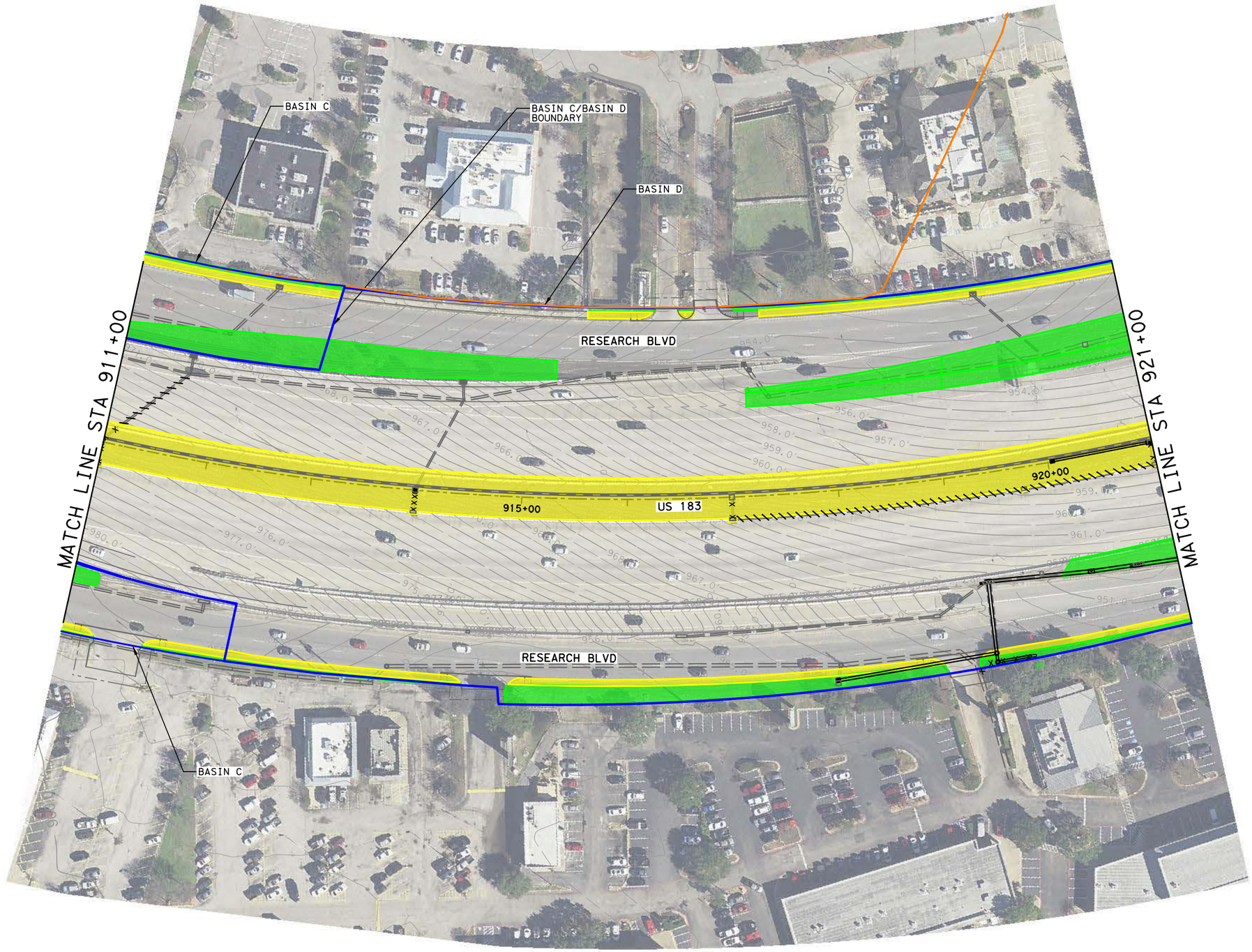

HORIZONTAL SCALE
0' 50' 100'

LEGEND

- OFFSET BASIN DIVIDE
- WATER QUALITY ONSITE AREA
- WATER QUALITY POND
- PROPOSED IMPERVIOUS AREA
- PROPOSED PERVIOUS AREA
- IMPERVIOUS AREA UNDER EXISTING BRIDGE
- IMPERVIOUS AREA UNDER PROPOSED BRIDGE
- WALT7000C — HEC HMS SUB-BASIN ID

NOT FOR CONSTRUCTION

FOR REVIEW ONLY. NOT FOR PERMITTING, BIDDING, OR CONSTRUCTION.

ISSUE RECORD

NO.	DESCRIPTION	DATE
A	30% DESIGN	22SEP21
B	65% DESIGN	25FEB22

CENTRAL TEXAS REGIONAL MOBILITY AUTHORITY

GREAT HILLS CONSTRUCTORS

PARSONS
TBPE Registration No. F-1481

183 NORTH MOBILITY
SEGMENT 1A
PROPOSED IMPERVIOUS AREA MAPS
STA 911+00 TO STA 921+00

DESIGNED	FED. RD. DIV. NO.		FEDERAL AID PROJECT NO.	HIGHWAY NO.
MM	6			US 183
DRAWN RG	STATE	DISTRICT	COUNTY	DRAWING
CHECKED MM	TEXAS	AUSTIN	TRAVIS, WILLIAMSON	1ADRIM13
APPROVED TM	CONTROL	SECTION	JOB	SHEET NO.
	0151	06	143	

User: p003822B Date: 2/25/2022 Time: 10:34:57 AM Pen Table: 183N_Standard.tbl Plot Config: 183N PDF.pltcfg
File Name: 1A-DRIM-13.dgn

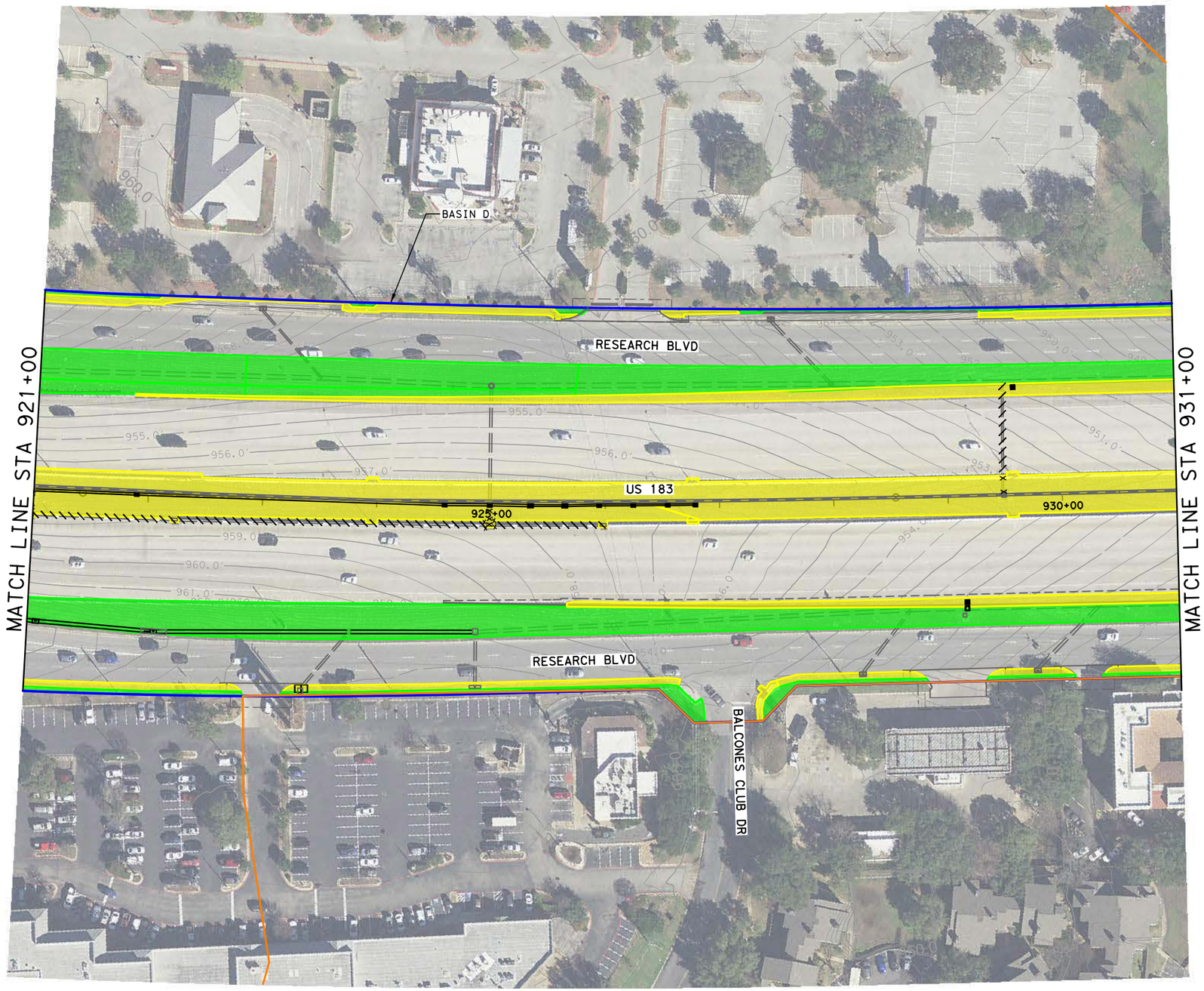

HORIZONTAL SCALE
0' 50' 100'

LEGEND

- OFFSET BASIN DIVIDE
- WATER QUALITY ONSITE AREA
- WATER QUALITY POND
- PROPOSED IMPERVIOUS AREA
- PROPOSED PERVIOUS AREA
- IMPERVIOUS AREA UNDER EXISTING BRIDGE
- IMPERVIOUS AREA UNDER PROPOSED BRIDGE
- WALT7000C — HEC HMS SUB-BASIN ID

NOT FOR CONSTRUCTION

FOR REVIEW ONLY. NOT FOR PERMITTING, BIDDING, OR CONSTRUCTION.

ISSUE RECORD

NO.	DESCRIPTION	DATE
A	30% DESIGN	22SEP21
B	65% DESIGN	25FEB22

CENTRAL TEXAS REGIONAL MOBILITY AUTHORITY

GREAT HILLS CONSTRUCTORS

PARSONS
TBPE Registration No. F-1481

183 NORTH MOBILITY
SEGMENT 1A
PROPOSED IMPERVIOUS AREA MAPS
STA 921+00 TO STA 931+00

DESIGNED	FED. RD. DIV. NO.		FEDERAL AID PROJECT NO.	HIGHWAY NO.
MM	6			US 183
DRAWN RG	STATE	DISTRICT	COUNTY	DRAWING
CHECKED MM	TEXAS	AUSTIN	TRAVIS, WILLIAMSON	1ADRIM14
APPROVED TM	CONTROL	SECTION	JOB	SHEET NO.
	0151	06	143	

User: p003822B Date: 2/25/2022 Time: 10:35:25 AM Pen Table: 183N_Standard.tbl Plot Config: 183N PDF.pltcfg
File Name: 1A-DRIM-14.dgn



HORIZONTAL SCALE
0' 50' 100'

LEGEND

- OFFSET BASIN DIVIDE
- WATER QUALITY ONSITE AREA
- WATER QUALITY POND
- PROPOSED IMPERVIOUS AREA
- PROPOSED PERVIOUS AREA
- IMPERVIOUS AREA UNDER EXISTING BRIDGE
- IMPERVIOUS AREA UNDER PROPOSED BRIDGE
- WALT7000C — HEC HMS SUB-BASIN ID

NOT FOR CONSTRUCTION

FOR REVIEW ONLY. NOT FOR PERMITTING, BIDDING, OR CONSTRUCTION.

ISSUE RECORD

NO.	DESCRIPTION	DATE
A	30% DESIGN	22SEP21
B	65% DESIGN	25FEB22

CENTRAL TEXAS REGIONAL MOBILITY AUTHORITY

GREAT HILLS CONSTRUCTORS

PARSONS
TBPE Registration No. F-1481

183 NORTH MOBILITY
SEGMENT 1A
PROPOSED IMPERVIOUS AREA MAPS
STA 931+00 TO STA 941+00

DESIGNED	FED. RD. DIV. NO.		FEDERAL AID PROJECT NO.	HIGHWAY NO.
MM	6			US 183
DRAWN RG	STATE	DISTRICT	COUNTY	DRAWING
CHECKED MM	TEXAS	AUSTIN	TRAVIS, WILLIAMSON	1ADRIM15
APPROVED TM	CONTROL	SECTION	JOB	SHEET NO.
	0151	06	143	

User: p003822B Date: 2/25/2022 Time: 10:35:59 AM Pen Table: 183N_Standard.tbl Plot Config: 183N PDF.pltcfg
File Name: 1A-DRIM-15.dgn

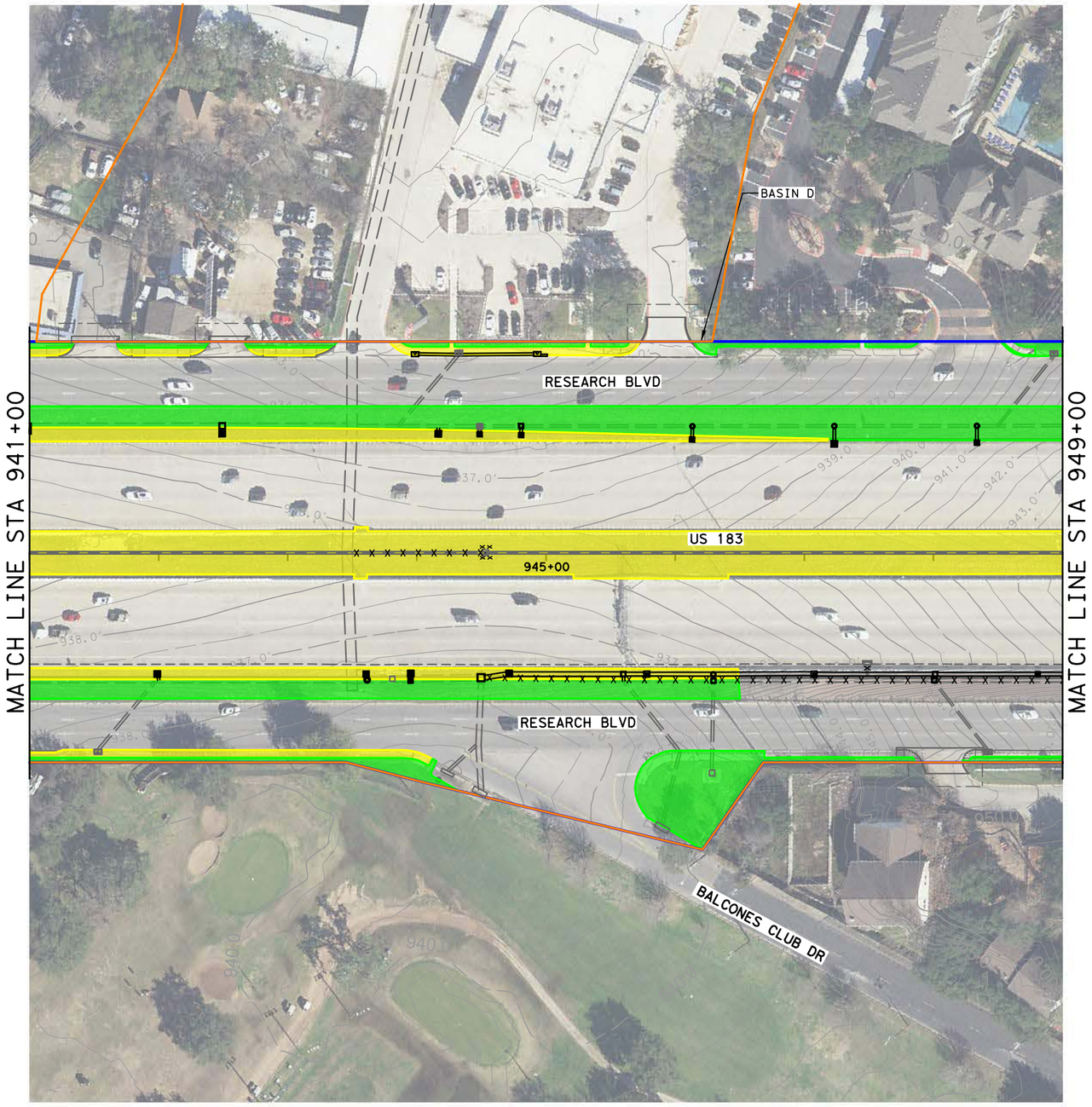

HORIZONTAL SCALE
0' 50' 100'

LEGEND

- OFFSET BASIN DIVIDE
- WATER QUALITY ONSITE AREA
- WATER QUALITY POND
- PROPOSED IMPERVIOUS AREA
- PROPOSED PERVIOUS AREA
- IMPERVIOUS AREA UNDER EXISTING BRIDGE
- IMPERVIOUS AREA UNDER PROPOSED BRIDGE
- WALT7000C HEC HMS SUB-BASIN ID

NOT FOR CONSTRUCTION

FOR REVIEW ONLY. NOT FOR PERMITTING, BIDDING, OR CONSTRUCTION.

ISSUE RECORD

NO.	DESCRIPTION	DATE
A	30% DESIGN	22SEP21
B	65% DESIGN	25FEB22

CENTRAL TEXAS REGIONAL MOBILITY AUTHORITY

GREAT HILLS CONSTRUCTORS

PARSONS
TBPE Registration No. F-1481

183 NORTH MOBILITY
SEGMENT 1A
PROPOSED IMPERVIOUS AREA MAPS
STA 941+00 TO STA 949+00

DESIGNED	FED. RD. DIV. NO.	FEDERAL AID PROJECT NO.	HIGHWAY NO.
MM	6		US 183
DRAWN RG	STATE / DISTRICT / COUNTY		DRAWING
CHECKED MM	TEXAS / AUSTIN / TRAVIS, WILLIAMSON		1ADRIM16
APPROVED TM	CONTROL / SECTION / JOB		SHEET NO.
	0151 / 06 / 143		

User: p003822B Date: 2/25/2022 Time: 10:36:34 AM Pen Table: 183N_Standard.tbl Plot Config: 183N PDF.pltcfg
File Name: 1A-DRIM-16.dgn

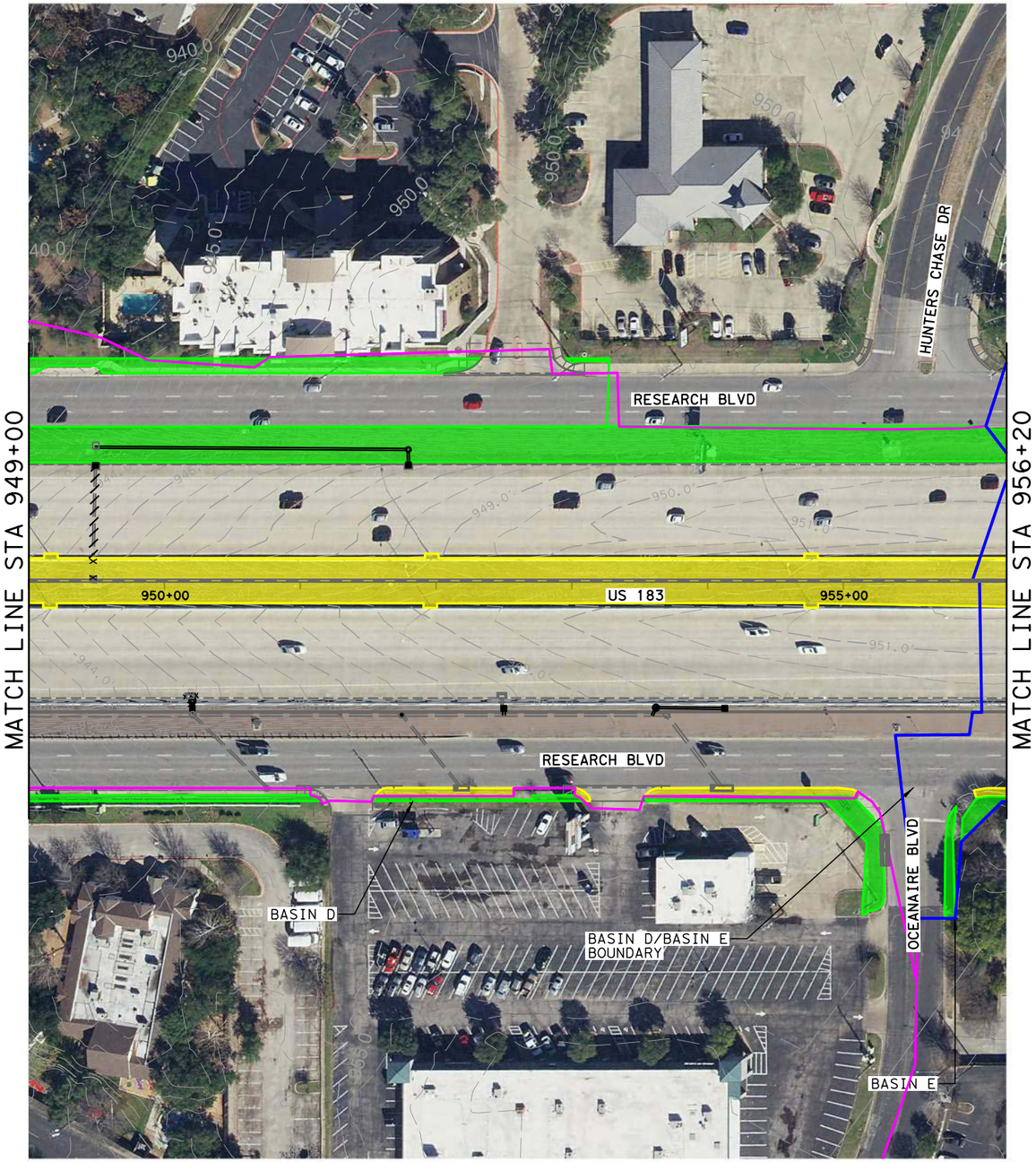

HORIZONTAL SCALE
0' 50' 100'

LEGEND

- OFFSET BASIN DIVIDE
- WATER QUALITY ONSITE AREA
- WATER QUALITY POND
- PROPOSED IMPERVIOUS AREA
- PROPOSED PERVIOUS AREA
- IMPERVIOUS AREA UNDER EXISTING BRIDGE
- IMPERVIOUS AREA UNDER PROPOSED BRIDGE
- WALT7000C — HEC HMS SUB-BASIN ID

NOT FOR CONSTRUCTION

FOR REVIEW ONLY. NOT FOR PERMITTING, BIDDING, OR CONSTRUCTION.

ISSUE RECORD

NO.	DESCRIPTION	DATE
A	30% DESIGN	22SEP21
B	65% DESIGN	25FEB22

CENTRAL TEXAS REGIONAL MOBILITY AUTHORITY

GREAT HILLS CONSTRUCTORS

VIRTEX CONSULTING ENGINEERS, INC. / PARSONS
TBPE Registration No. F-439 ©2022

183 NORTH MOBILITY
SEGMENT 1B
PROPOSED IMPERVIOUS AREA MAPS
STA 949+00 TO STA 955+95

DESIGNED	FED. RD. DIV. NO.		FEDERAL AID PROJECT NO.	HIGHWAY NO.
MM	6			US 183
DRAWN RG	STATE	DISTRICT	COUNTY	DRAWING
CHECKED MM	TEXAS	AUSTIN	TRAVIS, WILLIAMSON	1ADRIM17
APPROVED	CONTROL	SECTION	JOB	SHEET NO.
TM	0151	06	143	

User: p001433F Date: 10/7/2022 Time: 12:31:56 PM Pen Table: 183N_Standard.tbl Plot Config: 183N PDF.pltcfg
File Name: 1A-DRIM-17.dgn

APPENDIX F

TCEQ TSS LOAD REMOVAL CALCULATIONS

THE FIRST CALCULATION IN THE BASIN SECTION IS THE REQUIRED TSS LOAD REMOVAL AND VOLUME. THE SECOND CALCULATION IN THE BASIN (FOR BATCH DETENTION) IS THE ACTUAL TSS LOAD REMOVAL AND VOLUME - SHOWN IN TABLE 4

BASIN A

Texas Commission on Environmental Quality

TSS Removal Calculations 04-20-2009

Project Name: 183N
Date Prepared: 8/12/2022
Basin ID: 620 Median Pond

Additional information is provided for cells with a red triangle in the upper right corner. Place the cursor over the cell.
Text shown in blue indicate location of instructions in the Technical Guidance Manual - RG-348.
Characters shown in red are data entry fields.
Characters shown in black (Bold) are calculated fields. Changes to these fields will remove the equations used in the spreadsheet.

1. The Required Load Reduction for the total project: Calculations from RG-348 Pages 3-27 to 3-30

Page 3-29 Equation 3.3: $L_M = 27.2(A_N \times P)$

where:
$L_{M\ TOTAL\ PROJECT}$ = Required TSS removal resulting from the proposed development = 80% of increased load
A_N = Net increase in impervious area for the project
P = Average annual precipitation, inches

Site Data: Determine Required Load Removal Based on the Entire Project

County =	Williamson	
Total project area included in plan * =	445.40	acres
Predevelopment impervious area within the limits of the plan * =	217.24	acres
Total post-development impervious area within the limits of the plan* =	384.59	acres
Total post-development impervious cover fraction * =	0.86	
P =	32	inches
$L_{M\ TOTAL\ PROJECT}$ =	145661	lbs.

*** The values entered in these fields should be for the total project area.**

Number of drainage basins / outfalls areas leaving the plan area = 1

2. Drainage Basin Parameters (This information should be provided for each basin):

Drainage Basin/Outfall Area No. = 620 Median Pond

Total drainage basin/outfall area =	28.12	acres
Predevelopment impervious area within drainage basin/outfall area =	11.22	acres
Post-development impervious area within drainage basin/outfall area =	28.29	acres
Post-development impervious fraction within drainage basin/outfall area =	1.01	
$L_{M\ THIS\ BASIN}$ =	14858	lbs.

3. Indicate the proposed BMP Code for this basin.

Proposed BMP = Sand Filter
Removal efficiency = 89 percent

Aqualogic Cartridge Filter
Bioretention
Batch Detention Basin
BaySeparator
Contech StormFilter
Constructed Wetland
Extended Detention
Grassy Swale
Retention / Irrigation
Sand Filter
Stormceptor
Vegetated Filter Strips
Vortechs
Wet Basin
Wet Vault

4. Calculate Maximum TSS Load Removed (L_R) for this Drainage Basin by the selected BMP Type.

RG-348 Page 3-33 Equation 3.7: $L_R = (\text{BMP efficiency}) \times P \times (A_I \times 34.6 + A_P \times 0.54)$

where:
A_C = Total On-Site drainage area in the BMP catchment area
A_I = Impervious area proposed in the BMP catchment area
A_P = Pervious area remaining in the BMP catchment area
L_R = TSS Load removed from this catchment area by the proposed BMP

A_C =	28.12	acres
A_I =	28.29	acres
A_P =	0.00	acres
L_R =	27877	lbs

5. Calculate Fraction of Annual Runoff to Treat the drainage basin / outfall area

Desired $L_{M\ THIS\ BASIN}$ = 14900 lbs.

F = 0.53

6. Calculate Capture Volume required by the BMP Type for this drainage basin / outfall area. Calculations from RG-348 Pages 3-34 to 3-36

Rainfall Depth =	0.46	inches
Post Development Runoff Coefficient =	0.82	
On-site Water Quality Volume =	38877	cubic feet

Calculations from RG-348 Pages 3-36 to 3-37

Off-site area draining to BMP =	0.00	acres
Off-site Impervious cover draining to BMP =	0.00	acres
Impervious fraction of off-site area =	0	
Off-site Runoff Coefficient =	0.00	
Off-site Water Quality Volume =	0	cubic feet
Storage for Sediment =	7775	
Total Capture Volume (required water quality volume(s) x 1.20) =	46653	cubic feet

Texas Commission on Environmental Quality

TSS Removal Calculations 04-20-2009

Project Name: 183N
Date Prepared: 3/29/2023
Basin ID: 620 Median Pond

Additional information is provided for cells with a red triangle in the upper right corner. Place the cursor over the cell.
Text shown in blue indicate location of instructions in the Technical Guidance Manual - RG-348.
Characters shown in red are data entry fields.
Characters shown in black (Bold) are calculated fields. Changes to these fields will remove the equations used in the spreadsheet.

1. The Required Load Reduction for the total project: Calculations from RG-348 Pages 3-27 to 3-30

Page 3-29 Equation 3.3: $L_M = 27.2(A_N \times P)$

where:
$L_{M\ TOTAL\ PROJECT}$ = Required TSS removal resulting from the proposed development = 80% of increased load
A_N = Net increase in impervious area for the project
P = Average annual precipitation, inches

Site Data: Determine Required Load Removal Based on the Entire Project

County =	Williamson	
Total project area included in plan * =	445.40	acres
Predevelopment impervious area within the limits of the plan * =	217.24	acres
Total post-development impervious area within the limits of the plan* =	384.59	acres
Total post-development impervious cover fraction * =	0.86	
P =	32	inches
$L_{M\ TOTAL\ PROJECT}$ =	145661	lbs.

*** The values entered in these fields should be for the total project area.**

Number of drainage basins / outfalls areas leaving the plan area = 1

2. Drainage Basin Parameters (This information should be provided for each basin):

Drainage Basin/Outfall Area No. = 620 Median Pond

Total drainage basin/outfall area =	28.12	acres
Predevelopment impervious area within drainage basin/outfall area =	11.22	acres
Post-development impervious area within drainage basin/outfall area =	28.29	acres
Post-development impervious fraction within drainage basin/outfall area =	1.01	
$L_{M\ THIS\ BASIN}$ =	14858	lbs.

3. Indicate the proposed BMP Code for this basin.

Proposed BMP = Sand Filter
Removal efficiency = 89 percent

Aqualogic Cartridge Filter
Bioretention
Batch Detention Basin
BaySeparator
Contech StormFilter
Constructed Wetland
Extended Detention
Grassy Swale
Retention / Irrigation
Sand Filter
Stormceptor
Vegetated Filter Strips
Vortechs
Wet Basin
Wet Vault

4. Calculate Maximum TSS Load Removed (L_R) for this Drainage Basin by the selected BMP Type.

RG-348 Page 3-33 Equation 3.7: $L_R = (\text{BMP efficiency}) \times P \times (A_I \times 34.6 + A_P \times 0.54)$

where:
A_C = Total On-Site drainage area in the BMP catchment area
A_I = Impervious area proposed in the BMP catchment area
A_P = Pervious area remaining in the BMP catchment area
L_R = TSS Load removed from this catchment area by the proposed BMP

A_C =	28.12	acres
A_I =	28.29	acres
A_P =	0.00	acres
L_R =	27877	lbs

5. Calculate Fraction of Annual Runoff to Treat the drainage basin / outfall area

Desired $L_{M\ THIS\ BASIN}$ = 20480 lbs.

F = 0.73

6. Calculate Capture Volume required by the BMP Type for this drainage basin / outfall area. Calculations from RG-348 Pages 3-34 to 3-36

Rainfall Depth =	0.86	inches
Post Development Runoff Coefficient =	0.82	
On-site Water Quality Volume =	72526	cubic feet

Calculations from RG-348 Pages 3-36 to 3-37

Off-site area draining to BMP =	0.00	acres
Off-site Impervious cover draining to BMP =	0.00	acres
Impervious fraction of off-site area =	0	
Off-site Runoff Coefficient =	0.00	
Off-site Water Quality Volume =	0	cubic feet
Storage for Sediment =	14505	
Total Capture Volume (required water quality volume(s) x 1.20) =	87031	cubic feet

Contech Engineered Solutions Calculations for Texas Commission on Environmental Quality
TSS Removal Calculations

Project Name: **183 N Mobility Project**
Date Prepared: **10/11/2023**

1. The Required Load Reduction for the total project:

Calculations from RG-348
Pages 3-27 to 3-30

Page 3-29 Equation 3.3: $L_M = 27.2(A_N \times P)$

$L_{M\ TOTAL\ PROJECT}$ = Required TSS removal resulting from the proposed development = 80% of increased load
A_N = Net increase in impervious area for the project
P = Average annual precipitation, inches

Site Data: Determine Required Load Removal Based on the Entire Project

County =	**Travis**	
Total project area included in plan * =	**445.40**	acres
Predevelopment impervious area within the limits of the plan * =	**217.24**	acres
Total post-development impervious area within the limits of the plan* =	**384.59**	acres
Total post-development impervious cover fraction * =	**0.86**	
P =	**32**	inches
$L_{M\ TOTAL\ PROJECT}$ =	**145661**	lbs.
Number of drainage basins / outfalls areas leaving the plan area =	**1**	

2. Drainage Basin Parameters (This information should be provided for each basin):

Drainage Basin/Outfall Area No. = **Lake Creek Pond 1A**

Total drainage basin/outfall area =	**7.86**	acres
Predevelopment impervious area within drainage basin/outfall area =	**3.02**	acres
Post-development impervious area within drainage basin/outfall area =	**8.31**	acres
Post-development impervious fraction within drainage basin/outfall area =	**1.06**	
$L_{M\ THIS\ BASIN}$ =	**4604**	lbs.

3. Indicate the proposed BMP Code for this basin.

Proposed BMP =	**JF**	abbreviation
Removal efficiency =	**55**	percent

4. Calculate Maximum TSS Load Removed (L_R) for this Drainage Basin by the selected BMP Type.

RG-348 Page 3-33 Equation 3.7:
$LR = (\text{BMP efficiency}) \times P \times (A_I \times 34.6 + A_P \times 0.54)$

A_C = Total On-Site drainage area in the BMP catchment area
A_I = Impervious area proposed in the BMP catchment area
A_P = Pervious area remaining in the BMP catchment area
L_R = TSS Load removed from this catchment area by the proposed BMP

A_C =	**8.31**	acres
A_I =	**8.31**	acres
A_P =	**0.00**	acres
L_R =	**5099**	lbs.

5. Calculate Fraction of Annual Runoff to Treat the drainage basin / outfall area

Desired $L_{M\ THIS\ BASIN}$ =	**4604**	lbs.
F =	**0.90**	

6. Calculate Treated Flow required by the BMP Type for this drainage basin / outfall area.

Offsite area draining to BMP =	**0.00**	acres
Offsite impervious cover draining to BMP =	**0.00**	acres

Calculations from RG-348
Pages Section 3.2.22

Rainfall Intensity =	**1.10**	inches per hour
Effective Area =	**7.48**	acres
Cartridge Length =	**54**	inches
Peak Treatment Flow Required =	**8.30**	cubic feet per second

7. Jellyfish
Designed as Required in RG-348
Section 3.2.22

Flow Through Jellyfish Size	**Vault**	
Jellyfish Size for Flow-Based Configuration =	**2ea JFPD0811-21-5**	
Jellyfish Treatment Flow Rate =	**8.38**	cfs

Contech Engineered Solutions Calculations for Texas Commission on Environmental Quality
TSS Removal Calculations

Project Name: 183 N Mobility Project
Date Prepared: 10/11/2023

1. The Required Load Reduction for the total project:

Calculations from RG-348
Pages 3-27 to 3-30

Page 3-29 Equation 3.3: $L_M = 27.2(A_N \times P)$

$L_{M\ TOTAL\ PROJECT}$ = Required TSS removal resulting from the proposed development = 80% of increased load
A_N = Net increase in impervious area for the project
P = Average annual precipitation, inches

Site Data: Determine Required Load Removal Based on the Entire Project

County =	**Travis**	
Total project area included in plan * =	**445.40**	acres
Predevelopment impervious area within the limits of the plan * =	**217.24**	acres
Total post-development impervious area within the limits of the plan* =	**384.59**	acres
Total post-development impervious cover fraction * =	**0.86**	
P =	**32**	inches
$L_{M\ TOTAL\ PROJECT}$ =	**145661**	lbs.
Number of drainage basins / outfalls areas leaving the plan area =	**1**	

2. Drainage Basin Parameters (This information should be provided for each basin):

Drainage Basin/Outfall Area No. = Lake Creek Pond 1B

Total drainage basin/outfall area =	**8.24**	acres
Predevelopment impervious area within drainage basin/outfall area =	**1.28**	acres
Post-development impervious area within drainage basin/outfall area =	**8.43**	acres
Post-development impervious fraction within drainage basin/outfall area =	**1.02**	
$L_{M\ THIS\ BASIN}$ =	**6223**	lbs.

3. Indicate the proposed BMP Code for this basin.

Proposed BMP =	**JF**	abbreviation
Removal efficiency =	**74**	percent

4. Calculate Maximum TSS Load Removed (L_R) for this Drainage Basin by the selected BMP Type.

RG-348 Page 3-33 Equation 3.7:
$LR = (\text{BMP efficiency}) \times P \times (A_I \times 34.6 + A_P \times 0.54)$

A_C = Total On-Site drainage area in the BMP catchment area
A_I = Impervious area proposed in the BMP catchment area
A_P = Pervious area remaining in the BMP catchment area
L_R = TSS Load removed from this catchment area by the proposed BMP

A_C =	**8.43**	acres
A_I =	**8.43**	acres
A_P =	**0.00**	acres
L_R =	**6912**	lbs.

5. Calculate Fraction of Annual Runoff to Treat the drainage basin / outfall area

Desired $L_{M\ THIS\ BASIN}$ =	**6223**	lbs.
F =	**0.90**	

6. Calculate Treated Flow required by the BMP Type for this drainage basin / outfall area.

Offsite area draining to BMP =	**0.00**	acres
Offsite impervious cover draining to BMP =	**0.00**	acres

Calculations from RG-348
Pages Section 3.2.22

Rainfall Intensity =	**1.10**	inches per hour
Effective Area =	**7.59**	acres
Cartridge Length =	**54**	inches
Peak Treatment Flow Required =	**8.42**	cubic feet per second

7. Jellyfish

Designed as Required in RG-348
Section 3.2.22

Flow Through Jellyfish Size	**Vault**	
Jellyfish Size for Flow-Based Configuration =	**2ea JFPD0811-22-5**	
Jellyfish Treatment Flow Rate =	**8.74**	cfs

Contech Engineered Solutions Calculations for Texas Commission on Environmental Quality
TSS Removal Calculations

Project Name: **183 N Mobility Project**
Date Prepared: **10/11/2023**

1. The Required Load Reduction for the total project:

Calculations from RG-348
Pages 3-27 to 3-30

Page 3-29 Equation 3.3: $L_M = 27.2(A_N \times P)$

$L_{M\ TOTAL\ PROJECT}$ = Required TSS removal resulting from the proposed development = 80% of increased load
A_N = Net increase in impervious area for the project
P = Average annual precipitation, inches

Site Data: Determine Required Load Removal Based on the Entire Project

County =	**Travis**	
Total project area included in plan * =	**445.40**	acres
Predevelopment impervious area within the limits of the plan * =	**217.24**	acres
Total post-development impervious area within the limits of the plan* =	**384.59**	acres
Total post-development impervious cover fraction * =	**0.86**	
P =	**32**	inches
$L_{M\ TOTAL\ PROJECT}$ =	**145661**	lbs.
Number of drainage basins / outfalls areas leaving the plan area =	**1**	

2. Drainage Basin Parameters (This information should be provided for each basin):

Drainage Basin/Outfall Area No. = **Lake Creek Pond 1C**

Total drainage basin/outfall area =	**8.42**	acres
Predevelopment impervious area within drainage basin/outfall area =	**5.24**	acres
Post-development impervious area within drainage basin/outfall area =	**8.43**	acres
Post-development impervious fraction within drainage basin/outfall area =	**1.00**	
$L_{M\ THIS\ BASIN}$ =	**2777**	lbs.

3. Indicate the proposed BMP Code for this basin.

Proposed BMP =	**JF**	abbreviation
Removal efficiency =	**33**	percent

4. Calculate Maximum TSS Load Removed (L_R) for this Drainage Basin by the selected BMP Type.

RG-348 Page 3-33 Equation 3.7:
$LR = (\text{BMP efficiency}) \times P \times (A_I \times 34.6 + A_P \times 0.54)$

A_C = Total On-Site drainage area in the BMP catchment area
A_I = Impervious area proposed in the BMP catchment area
A_P = Pervious area remaining in the BMP catchment area
L_R = TSS Load removed from this catchment area by the proposed BMP

A_C =	**8.43**	acres
A_I =	**8.43**	acres
A_P =	**0.00**	acres
L_R =	**3080**	lbs.

5. Calculate Fraction of Annual Runoff to Treat the drainage basin / outfall area

Desired $L_{M\ THIS\ BASIN}$ =	**2777**	lbs.
F =	**0.90**	

6. Calculate Treated Flow required by the BMP Type for this drainage basin / outfall area.

Offsite area draining to BMP =	**0.00**	acres
Offsite impervious cover draining to BMP =	**0.00**	acres

Calculations from RG-348
Pages Section 3.2.22

Rainfall Intensity =	**1.10**	inches per hour
Effective Area =	**7.59**	acres
Cartridge Length =	**54**	inches
Peak Treatment Flow Required =	**8.42**	cubic feet per second

7. Jellyfish

Designed as Required in RG-348
Section 3.2.22

Flow Through Jellyfish Size	**Vault**	
Jellyfish Size for Flow-Based Configuration =	**2ea JFPD0811-22-5**	
Jellyfish Treatment Flow Rate =	**8.74**	cfs

BASIN B

Contech Engineered Solutions Calculations for Texas Commission on Environmental Quality
TSS Removal Calculations

Project Name: 183 N Mobility Project
Date Prepared: 10/11/2023

1. The Required Load Reduction for the total project:

Calculations from RG-348
Pages 3-27 to 3-30

Page 3-29 Equation 3.3: $L_M = 27.2(A_N \times P)$

$L_{M\ TOTAL\ PROJECT}$ = Required TSS removal resulting from the proposed development = 80% of increased load
A_N = Net increase in impervious area for the project
P = Average annual precipitation, inches

Site Data: Determine Required Load Removal Based on the Entire Project

County =	**Travis**	
Total project area included in plan * =	**445.40**	acres
Predevelopment impervious area within the limits of the plan * =	**217.24**	acres
Total post-development impervious area within the limits of the plan* =	**384.59**	acres
Total post-development impervious cover fraction * =	**0.86**	
P =	**32**	inches
$L_{M\ TOTAL\ PROJECT}$ =	**145661**	lbs.
Number of drainage basins / outfalls areas leaving the plan area =	**1**	

2. Drainage Basin Parameters (This information should be provided for each basin):

Drainage Basin/Outfall Area No. = Lake Creek Pond 2A

Total drainage basin/outfall area =	**6.91**	acres
Predevelopment impervious area within drainage basin/outfall area =	**0.80**	acres
Post-development impervious area within drainage basin/outfall area =	**6.62**	acres
Post-development impervious fraction within drainage basin/outfall area =	**0.96**	
$L_{M\ THIS\ BASIN}$ =	**5066**	lbs.

3. Indicate the proposed BMP Code for this basin.

Proposed BMP =	**JF**	abbreviation
Removal efficiency =	**76**	percent

4. Calculate Maximum TSS Load Removed (L_R) for this Drainage Basin by the selected BMP Type.

RG-348 Page 3-33 Equation 3.7:
LR = (BMP efficiency) x P x (A_I x 34.6 + A_P x 0.54)

A_C = Total On-Site drainage area in the BMP catchment area
A_I = Impervious area proposed in the BMP catchment area
A_P = Pervious area remaining in the BMP catchment area
L_R = TSS Load removed from this catchment area by the proposed BMP

A_C =	**6.91**	acres
A_I =	**6.62**	acres
A_P =	**0.29**	acres
L_R =	**5607**	lbs.

5. Calculate Fraction of Annual Runoff to Treat the drainage basin / outfall area

Desired $L_{M\ THIS\ BASIN}$ =	**5066**	lbs.
F =	**0.90**	

6. Calculate Treated Flow required by the BMP Type for this drainage basin / outfall area.

Offsite area draining to BMP =	**0.00**	acres
Offsite impervious cover draining to BMP =	**0.00**	acres

Calculations from RG-348
Pages Section 3.2.22

Rainfall Intensity =	**1.10**	inches per hour
Effective Area =	**5.97**	acres
Cartridge Length =	**54**	inches
Peak Treatment Flow Required =	**6.62**	cubic feet per second

7. Jellyfish

Designed as Required in RG-348
Section 3.2.22

Flow Through Jellyfish Size	**Vault**	
Jellyfish Size for Flow-Based Configuration =	**JFPD0816-34-7**	
Jellyfish Treatment Flow Rate =	**6.68**	cfs

Contech Engineered Solutions Calculations for Texas Commission on Environmental Quality
TSS Removal Calculations

Project Name: 183 N Mobility Project
Date Prepared: 10/11/2023

1. The Required Load Reduction for the total project:

Calculations from RG-348
Pages 3-27 to 3-30

Page 3-29 Equation 3.3: $L_M = 27.2(A_N \times P)$

$L_{M\ TOTAL\ PROJECT}$ = Required TSS removal resulting from the proposed development = 80% of increased load
A_N = Net increase in impervious area for the project
P = Average annual precipitation, inches

Site Data: Determine Required Load Removal Based on the Entire Project

County =	Travis	
Total project area included in plan * =	445.40	acres
Predevelopment impervious area within the limits of the plan * =	217.24	acres
Total post-development impervious area within the limits of the plan* =	384.59	acres
Total post-development impervious cover fraction * =	0.86	
P =	32	inches
$L_{M\ TOTAL\ PROJECT}$ =	145661	lbs.
Number of drainage basins / outfalls areas leaving the plan area =	1	

2. Drainage Basin Parameters (This information should be provided for each basin):

Drainage Basin/Outfall Area No. = Lake Creek Pond 2B

Total drainage basin/outfall area =	3.79	acres
Predevelopment impervious area within drainage basin/outfall area =	0.29	acres
Post-development impervious area within drainage basin/outfall area =	2.94	acres
Post-development impervious fraction within drainage basin/outfall area =	0.78	
$L_{M\ THIS\ BASIN}$ =	2307	lbs.

3. Indicate the proposed BMP Code for this basin.

Proposed BMP =	JF	abbreviation
Removal efficiency =	78	percent

4. Calculate Maximum TSS Load Removed (L_R) for this Drainage Basin by the selected BMP Type.

RG-348 Page 3-33 Equation 3.7:
$LR = (\text{BMP efficiency}) \times P \times (A_I \times 34.6 + A_P \times 0.54)$

A_C = Total On-Site drainage area in the BMP catchment area
A_I = Impervious area proposed in the BMP catchment area
A_P = Pervious area remaining in the BMP catchment area
L_R = TSS Load removed from this catchment area by the proposed BMP

A_C =	3.79	acres
A_I =	2.94	acres
A_P =	0.85	acres
L_R =	2562	lbs.

5. Calculate Fraction of Annual Runoff to Treat the drainage basin / outfall area

Desired $L_{M\ THIS\ BASIN}$ =	2307	lbs.
F =	0.90	

6. Calculate Treated Flow required by the BMP Type for this drainage basin / outfall area.

Offsite area draining to BMP =	0.00	acres
Offsite impervious cover draining to BMP =	0.00	acres

Calculations from RG-348
Pages Section 3.2.22

Rainfall Intensity =	1.10	inches per hour
Effective Area =	2.67	acres
Cartridge Length =	54	inches
Peak Treatment Flow Required =	2.96	cubic feet per second

7. Jellyfish
Designed as Required in RG-348
Section 3.2.22

Flow Through Jellyfish Size	Vault	
Jellyfish Size for Flow-Based Configuration =	JFPD0811-15-4	
Jellyfish Treatment Flow Rate =	3.03	cfs

Contech Engineered Solutions Calculations for Texas Commission on Environmental Quality
TSS Removal Calculations

Project Name: **183 N Mobility Project**
Date Prepared: **10/11/2023**

1. The Required Load Reduction for the total project:

Calculations from RG-348
Pages 3-27 to 3-30

Page 3-29 Equation 3.3: $L_M = 27.2(A_N \times P)$

$L_{M\ TOTAL\ PROJECT}$ = Required TSS removal resulting from the proposed development = 80% of increased load
A_N = Net increase in impervious area for the project
P = Average annual precipitation, inches

Site Data: Determine Required Load Removal Based on the Entire Project

County =	**Travis**	
Total project area included in plan * =	**445.40**	acres
Predevelopment impervious area within the limits of the plan * =	**217.24**	acres
Total post-development impervious area within the limits of the plan* =	**384.59**	acres
Total post-development impervious cover fraction * =	**0.86**	
P =	**32**	inches
$L_{M\ TOTAL\ PROJECT}$ =	**145661**	lbs.
Number of drainage basins / outfalls areas leaving the plan area =	**1**	

2. Drainage Basin Parameters (This information should be provided for each basin):

Drainage Basin/Outfall Area No. = **Lake Creek Pond 2C**

Total drainage basin/outfall area =	**3.28**	acres
Predevelopment impervious area within drainage basin/outfall area =	**2.09**	acres
Post-development impervious area within drainage basin/outfall area =	**2.84**	acres
Post-development impervious fraction within drainage basin/outfall area =	**0.87**	
$L_{M\ THIS\ BASIN}$ =	**653**	lbs.

3. Indicate the proposed BMP Code for this basin.

Proposed BMP =	**JF**	abbreviation
Removal efficiency =	**23**	percent

4. Calculate Maximum TSS Load Removed (L_R) for this Drainage Basin by the selected BMP Type.

RG-348 Page 3-33 Equation 3.7:
LR = (BMP efficiency) x P x (A_I x 34.6 + A_P x 0.54)

A_C = Total On-Site drainage area in the BMP catchment area
A_I = Impervious area proposed in the BMP catchment area
A_P = Pervious area remaining in the BMP catchment area
L_R = TSS Load removed from this catchment area by the proposed BMP

A_C =	**3.28**	acres
A_I =	**2.84**	acres
A_P =	**0.44**	acres
L_R =	**723**	lbs.

5. Calculate Fraction of Annual Runoff to Treat the drainage basin / outfall area

Desired $L_{M\ THIS\ BASIN}$ =	**653**	lbs.
F =	**0.90**	

6. Calculate Treated Flow required by the BMP Type for this drainage basin / outfall area.

Offsite area draining to BMP =	**0.00**	acres
Offsite impervious cover draining to BMP =	**0.00**	acres

Calculations from RG-348
Pages Section 3.2.22

Rainfall Intensity =	**1.10**	inches per hour
Effective Area =	**2.57**	acres
Cartridge Length =	**54**	inches
Peak Treatment Flow Required =	**2.85**	cubic feet per second

7. Jellyfish
Designed as Required in RG-348
Section 3.2.22

Flow Through Jellyfish Size	**Vault**	
Jellyfish Size for Flow-Based Configuration =	**JFPD0808-15-3**	
Jellyfish Treatment Flow Rate =	**2.94**	cfs

Texas Commission on Environmental Quality

TSS Removal Calculations 04-20-2009

Project Name: 183N
Date Prepared: 8/12/2022
Basin ID: Hymeadow 2D1

Additional information is provided for cells with a red triangle in the upper right corner. Place the cursor over the cell.
Text shown in blue indicate location of instructions in the Technical Guidance Manual - RG-348.
Characters shown in red are data entry fields.
Characters shown in black (Bold) are calculated fields. Changes to these fields will remove the equations used in the spreadsheet.

1. The Required Load Reduction for the total project: Calculations from RG-348 Pages 3-27 to 3-30

Page 3-29 Equation 3.3: $L_M = 27.2(A_N \times P)$

where:
$L_{M\ TOTAL\ PROJECT}$ = Required TSS removal resulting from the proposed development = 80% of increased load
A_N = Net increase in impervious area for the project
P = Average annual precipitation, inches

Site Data: Determine Required Load Removal Based on the Entire Project

County =	Williamson	
Total project area included in plan * =	445.40	acres
Predevelopment impervious area within the limits of the plan * =	217.24	acres
Total post-development impervious area within the limits of the plan* =	384.59	acres
Total post-development impervious cover fraction * =	0.86	
P =	32	inches
$L_{M\ TOTAL\ PROJECT}$ =	145661	lbs.

* The values entered in these fields should be for the total project area.

Number of drainage basins / outfalls areas leaving the plan area = 1

2. Drainage Basin Parameters (This information should be provided for each basin):

Drainage Basin/Outfall Area No. = 2D1

Total drainage basin/outfall area =	4.62	acres
Predevelopment impervious area within drainage basin/outfall area =	2.81	acres
Post-development impervious area within drainage basin/outfall area =	4.51	acres
Post-development impervious fraction within drainage basin/outfall area =	0.98	
$L_{M\ THIS\ BASIN}$ =	1480	lbs.

3. Indicate the proposed BMP Code for this basin.

Proposed BMP = Batch Detention Basin
Removal efficiency = 91 percent

Aqualogic Cartridge Filter
Bioretention
Batch Detention Basin
BaySeparator
Contech StormFilter
Constructed Wetland
Extended Detention
Grassy Swale
Retention / Irrigation
Sand Filter
Stormceptor
Vegetated Filter Strips
Vortechs
Wet Basin
Wet Vault

4. Calculate Maximum TSS Load Removed (L_R) for this Drainage Basin by the selected BMP Type.

RG-348 Page 3-33 Equation 3.7: $L_R = (\text{BMP efficiency}) \times P \times (A_I \times 34.6 + A_P \times 0.54)$

where:
A_C = Total On-Site drainage area in the BMP catchment area
A_I = Impervious area proposed in the BMP catchment area
A_P = Pervious area remaining in the BMP catchment area
L_R = TSS Load removed from this catchment area by the proposed BMP

A_C =	4.62	acres
A_I =	4.51	acres
A_P =	0.11	acres
L_R =	4546	lbs

5. Calculate Fraction of Annual Runoff to Treat the drainage basin / outfall area

Desired $L_{M\ THIS\ BASIN}$ = 1500 lbs.

F = 0.33

6. Calculate Capture Volume required by the BMP Type for this drainage basin / outfall area. Calculations from RG-348 Pages 3-34 to 3-36

Rainfall Depth =	0.22	inches
Post Development Runoff Coefficient =	0.80	
On-site Water Quality Volume =	2896	cubic feet

Calculations from RG-348 Pages 3-36 to 3-37

Off-site area draining to BMP =	9.86	acres
Off-site Impervious cover draining to BMP =	5.87	acres
Impervious fraction of off-site area =	0.59	
Off-site Runoff Coefficient =	0.42	
Off-site Water Quality Volume =	3231	cubic feet
Storage for Sediment =	1225	
Total Capture Volume (required water quality volume(s) x 1.20) =	7352	cubic feet

Texas Commission on Environmental Quality

TSS Removal Calculations 04-20-2009

Project Name: 183N
Date Prepared: 3/29/2023
Basin ID: Hymeadow 2D1

Additional information is provided for cells with a red triangle in the upper right corner. Place the cursor over the cell.
Text shown in blue indicate location of instructions in the Technical Guidance Manual - RG-348.
Characters shown in red are data entry fields.
Characters shown in black (Bold) are calculated fields. Changes to these fields will remove the equations used in the spreadsheet.

1. The Required Load Reduction for the total project: Calculations from RG-348 Pages 3-27 to 3-30

Page 3-29 Equation 3.3: $L_M = 27.2(A_N \times P)$

where:
$L_{M\ TOTAL\ PROJECT}$ = Required TSS removal resulting from the proposed development = 80% of increased load
A_N = Net increase in impervious area for the project
P = Average annual precipitation, inches

Site Data: Determine Required Load Removal Based on the Entire Project

County =	Williamson	
Total project area included in plan * =	445.00	acres
Predevelopment impervious area within the limits of the plan * =	217.24	acres
Total post-development impervious area within the limits of the plan* =	384.59	acres
Total post-development impervious cover fraction * =	0.86	
P =	32	inches
$L_{M\ TOTAL\ PROJECT}$ =	145661	lbs.

* The values entered in these fields should be for the total project area.

Number of drainage basins / outfalls areas leaving the plan area = 1

2. Drainage Basin Parameters (This information should be provided for each basin):

Drainage Basin/Outfall Area No. = 2D1

Total drainage basin/outfall area =	4.62	acres
Predevelopment impervious area within drainage basin/outfall area =	2.81	acres
Post-development impervious area within drainage basin/outfall area =	4.51	acres
Post-development impervious fraction within drainage basin/outfall area =	0.98	
$L_{M\ THIS\ BASIN}$ =	1480	lbs.

3. Indicate the proposed BMP Code for this basin.

Proposed BMP = Batch Detention Basin
Removal efficiency = 91 percent

Aqualogic Cartridge Filter
Bioretention
Batch Detention Basin
BaySeparator
Contech StormFilter
Constructed Wetland
Extended Detention
Grassy Swale
Retention / Irrigation
Sand Filter
Stormceptor
Vegetated Filter Strips
Vortechs
Wet Basin
Wet Vault

4. Calculate Maximum TSS Load Removed (L_R) for this Drainage Basin by the selected BMP Type.

RG-348 Page 3-33 Equation 3.7: $L_R = (\text{BMP efficiency}) \times P \times (A_I \times 34.6 + A_P \times 0.54)$

where:
A_C = Total On-Site drainage area in the BMP catchment area
A_I = Impervious area proposed in the BMP catchment area
A_P = Pervious area remaining in the BMP catchment area
L_R = TSS Load removed from this catchment area by the proposed BMP

A_C =	4.62	acres
A_I =	4.51	acres
A_P =	0.11	acres
L_R =	4546	lbs

5. Calculate Fraction of Annual Runoff to Treat the drainage basin / outfall area

Desired $L_{M\ THIS\ BASIN}$ = 1977 lbs.

F = 0.43

6. Calculate Capture Volume required by the BMP Type for this drainage basin / outfall area. Calculations from RG-348 Pages 3-34 to 3-36

Rainfall Depth =	0.33	inches
Post Development Runoff Coefficient =	0.80	
On-site Water Quality Volume =	4424	cubic feet

Calculations from RG-348 Pages 3-36 to 3-37

Off-site area draining to BMP =	9.86	acres
Off-site Impervious cover draining to BMP =	5.87	acres
Impervious fraction of off-site area =	0.59	
Off-site Runoff Coefficient =	0.42	
Off-site Water Quality Volume =	4937	cubic feet
Storage for Sediment =	1872	
Total Capture Volume (required water quality volume(s) x 1.20) =	11232	cubic feet

Contech Engineered Solutions Calculations for Texas Commission on Environmental Quality
TSS Removal Calculations

Project Name: **183 N Mobility Project**
Date Prepared: **10/11/2023**

1. The Required Load Reduction for the total project:

Calculations from RG-348
Pages 3-27 to 3-30

Page 3-29 Equation 3.3: $L_M = 27.2(A_N \times P)$

$L_{M\ TOTAL\ PROJECT}$ = Required TSS removal resulting from the proposed development = 80% of increased load
A_N = Net increase in impervious area for the project
P = Average annual precipitation, inches

Site Data: Determine Required Load Removal Based on the Entire Project

County =	**Travis**	
Total project area included in plan * =	**445.40**	acres
Predevelopment impervious area within the limits of the plan * =	**217.24**	acres
Total post-development impervious area within the limits of the plan* =	**384.59**	acres
Total post-development impervious cover fraction * =	**0.86**	
P =	**32**	inches
$L_{M\ TOTAL\ PROJECT}$ =	**145661**	lbs.
Number of drainage basins / outfalls areas leaving the plan area =	**1**	

2. Drainage Basin Parameters (This information should be provided for each basin):

Drainage Basin/Outfall Area No. = **Lake Creek Pond 2D2**

Total drainage basin/outfall area =	**1.26**	acres
Predevelopment impervious area within drainage basin/outfall area =	**0.32**	acres
Post-development impervious area within drainage basin/outfall area =	**0.79**	acres
Post-development impervious fraction within drainage basin/outfall area =	**0.63**	
$L_{M\ THIS\ BASIN}$ =	**409**	lbs.

3. Indicate the proposed BMP Code for this basin.

Proposed BMP =	**JF**	abbreviation
Removal efficiency =	**52**	percent

4. Calculate Maximum TSS Load Removed (L_R) for this Drainage Basin by the selected BMP Type.

RG-348 Page 3-33 Equation 3.7:
$LR = (\text{BMP efficiency}) \times P \times (A_I \times 34.6 + A_P \times 0.54)$

A_C = Total On-Site drainage area in the BMP catchment area
A_I = Impervious area proposed in the BMP catchment area
A_P = Pervious area remaining in the BMP catchment area
L_R = TSS Load removed from this catchment area by the proposed BMP

A_C =	**1.26**	acres
A_I =	**0.79**	acres
A_P =	**0.47**	acres
L_R =	**456**	lbs.

5. Calculate Fraction of Annual Runoff to Treat the drainage basin / outfall area

Desired $L_{M\ THIS\ BASIN}$ =	**409**	lbs.
F =	**0.90**	

6. Calculate Treated Flow required by the BMP Type for this drainage basin / outfall area.

Offsite area draining to BMP =	**0.00**	acres
Offsite impervious cover draining to BMP =	**0.00**	acres

Calculations from RG-348
Pages Section 3.2.22

Rainfall Intensity =	**1.10**	inches per hour
Effective Area =	**0.73**	acres
Cartridge Length =	**54**	inches
Peak Treatment Flow Required =	**0.80**	cubic feet per second

7. Jellyfish
Designed as Required in RG-348
Section 3.2.22

Flow Through Jellyfish Size	**Vault**	
Jellyfish Size for Flow-Based Configuration =	**JFPD0406-4-1**	
Jellyfish Treatment Flow Rate =	**0.80**	cfs

BASIN C

Texas Commission on Environmental Quality

TSS Removal Calculations 04-20-2009

Project Name: 183N
Date Prepared: 8/12/2022
Basin ID: Basin C Pond Springs Pond

Additional information is provided for cells with a red triangle in the upper right corner. Place the cursor over the cell.
Text shown in blue indicate location of instructions in the Technical Guidance Manual - RG-348.
Characters shown in red are data entry fields.
Characters shown in black (Bold) are calculated fields. Changes to these fields will remove the equations used in the spreadsheet.

1. The Required Load Reduction for the total project: Calculations from RG-348 Pages 3-27 to 3-30

Page 3-29 Equation 3.3: $L_M = 27.2(A_N \times P)$

where:
$L_{M\ TOTAL\ PROJECT}$ = Required TSS removal resulting from the proposed development = 80% of increased load
A_N = Net increase in impervious area for the project
P = Average annual precipitation, inches

Site Data: Determine Required Load Removal Based on the Entire Project

County =	Williamson	
Total project area included in plan * =	445.40	acres
Predevelopment impervious area within the limits of the plan * =	217.24	acres
Total post-development impervious area within the limits of the plan* =	384.59	acres
Total post-development impervious cover fraction * =	0.86	
P =	32	inches
$L_{M\ TOTAL\ PROJECT}$ =	145661	lbs.

* The values entered in these fields should be for the total project area.

Number of drainage basins / outfalls areas leaving the plan area = 1

2. Drainage Basin Parameters (This information should be provided for each basin):

Drainage Basin/Outfall Area No. = C

Total drainage basin/outfall area =	30.94	acres
Predevelopment impervious area within drainage basin/outfall area =	12.43	acres
Post-development impervious area within drainage basin/outfall area =	27.20	acres
Post-development impervious fraction within drainage basin/outfall area =	0.88	
$L_{M\ THIS\ BASIN}$ =	12856	lbs.

3. Indicate the proposed BMP Code for this basin.

Proposed BMP = Batch Detention Basin
Removal efficiency = 91 percent

Aqualogic Cartridge Filter
Bioretention
Batch Detention Basin
BaySeparator
Contech StormFilter
Constructed Wetland
Extended Detention
Grassy Swale
Retention / Irrigation
Sand Filter
Stormceptor
Vegetated Filter Strips
Vortechs
Wet Basin
Wet Vault

4. Calculate Maximum TSS Load Removed (L_R) for this Drainage Basin by the selected BMP Type.

RG-348 Page 3-33 Equation 3.7: $L_R = (\text{BMP efficiency}) \times P \times (A_I \times 34.6 + A_P \times 0.54)$

where:
A_C = Total On-Site drainage area in the BMP catchment area
A_I = Impervious area proposed in the BMP catchment area
A_P = Pervious area remaining in the BMP catchment area
L_R = TSS Load removed from this catchment area by the proposed BMP

A_C =	30.94	acres
A_I =	27.20	acres
A_P =	3.74	acres
L_R =	27464	lbs

5. Calculate Fraction of Annual Runoff to Treat the drainage basin / outfall area

Desired $L_{M\ THIS\ BASIN}$ = 12900 lbs.

F = 0.47

6. Calculate Capture Volume required by the BMP Type for this drainage basin / outfall area. Calculations from RG-348 Pages 3-34 to 3-36

Rainfall Depth =	0.38	inches
Post Development Runoff Coefficient =	0.72	
On-site Water Quality Volume =	30880	cubic feet

Calculations from RG-348 Pages 3-36 to 3-37

Off-site area draining to BMP =	5.77	acres
Off-site Impervious cover draining to BMP =	5.77	acres
Impervious fraction of off-site area =	1.00	
Off-site Runoff Coefficient =	0.82	
Off-site Water Quality Volume =	6548	cubic feet
Storage for Sediment =	7486	
Total Capture Volume (required water quality volume(s) x 1.20) =	44913	cubic feet

Texas Commission on Environmental Quality

TSS Removal Calculations 04-20-2009

Project Name: 183N
Date Prepared: 3/29/2023
Basin ID: Basin C Pond Springs Pond

Additional information is provided for cells with a red triangle in the upper right corner. Place the cursor over the cell.
Text shown in blue indicate location of instructions in the Technical Guidance Manual - RG-348.
Characters shown in red are data entry fields.
Characters shown in black (Bold) are calculated fields. Changes to these fields will remove the equations used in the spreadsheet.

1. The Required Load Reduction for the total project: Calculations from RG-348 Pages 3-27 to 3-30

Page 3-29 Equation 3.3: $L_M = 27.2(A_N \times P)$

where:
$L_{M\ TOTAL\ PROJECT}$ = Required TSS removal resulting from the proposed development = 80% of increased load
A_N = Net increase in impervious area for the project
P = Average annual precipitation, inches

Site Data: Determine Required Load Removal Based on the Entire Project

County =	Williamson	
Total project area included in plan * =	445.40	acres
Predevelopment impervious area within the limits of the plan * =	217.24	acres
Total post-development impervious area within the limits of the plan* =	384.59	acres
Total post-development impervious cover fraction * =	0.86	
P =	32	inches
$L_{M\ TOTAL\ PROJECT}$ =	145661	lbs.

* The values entered in these fields should be for the total project area.

Number of drainage basins / outfalls areas leaving the plan area = 1

2. Drainage Basin Parameters (This information should be provided for each basin):

Drainage Basin/Outfall Area No. = C

Total drainage basin/outfall area =	30.94	acres
Predevelopment impervious area within drainage basin/outfall area =	12.43	acres
Post-development impervious area within drainage basin/outfall area =	27.20	acres
Post-development impervious fraction within drainage basin/outfall area =	0.88	
$L_{M\ THIS\ BASIN}$ =	12856	lbs.

3. Indicate the proposed BMP Code for this basin.

Proposed BMP = Batch Detention Basin
Removal efficiency = 91 percent

Aqualogic Cartridge Filter
Bioretention
Batch Detention Basin
BaySeparator
Contech StormFilter
Constructed Wetland
Extended Detention
Grassy Swale
Retention / Irrigation
Sand Filter
Stormceptor
Vegetated Filter Strips
Vortechs
Wet Basin
Wet Vault

4. Calculate Maximum TSS Load Removed (L_R) for this Drainage Basin by the selected BMP Type.

RG-348 Page 3-33 Equation 3.7: L_R = (BMP efficiency) x P x (A_I x 34.6 + A_P x 0.54)

where:
A_C = Total On-Site drainage area in the BMP catchment area
A_I = Impervious area proposed in the BMP catchment area
A_P = Pervious area remaining in the BMP catchment area
L_R = TSS Load removed from this catchment area by the proposed BMP

A_C =	30.94	acres
A_I =	27.20	acres
A_P =	3.74	acres
L_R =	27464	lbs

5. Calculate Fraction of Annual Runoff to Treat the drainage basin / outfall area

Desired $L_{M\ THIS\ BASIN}$ = 13860 lbs.

F = 0.50

6. Calculate Capture Volume required by the BMP Type for this drainage basin / outfall area. Calculations from RG-348 Pages 3-34 to 3-36

Rainfall Depth =	0.42	inches
Post Development Runoff Coefficient =	0.72	
On-site Water Quality Volume =	34024	cubic feet

Calculations from RG-348 Pages 3-36 to 3-37

Off-site area draining to BMP =	5.77	acres
Off-site Impervious cover draining to BMP =	5.77	acres
Impervious fraction of off-site area =	1.00	
Off-site Runoff Coefficient =	0.82	
Off-site Water Quality Volume =	7215	cubic feet
Storage for Sediment =	8248	
Total Capture Volume (required water quality volume(s) x 1.20) =	49487	cubic feet

BASIN D

Texas Commission on Environmental Quality

TSS Removal Calculations 04-20-2009

Project Name: 183N
Date Prepared: 8/12/2022
Basin ID: Basin D Woods Pond

Additional information is provided for cells with a red triangle in the upper right corner. Place the cursor over the cell.
Text shown in blue indicate location of instructions in the Technical Guidance Manual - RG-348.
Characters shown in red are data entry fields.
Characters shown in black (Bold) are calculated fields. Changes to these fields will remove the equations used in the spreadsheet.

1. The Required Load Reduction for the total project: Calculations from RG-348 Pages 3-27 to 3-30

Page 3-29 Equation 3.3: $L_M = 27.2(A_N \times P)$

where:
$L_{M\ TOTAL\ PROJECT}$ = Required TSS removal resulting from the proposed development = 80% of increased load
A_N = Net increase in impervious area for the project
P = Average annual precipitation, inches

Site Data: Determine Required Load Removal Based on the Entire Project

County =	Williamson	
Total project area included in plan * =	445.40	acres
Predevelopment impervious area within the limits of the plan * =	217.24	acres
Total post-development impervious area within the limits of the plan* =	384.59	acres
Total post-development impervious cover fraction * =	0.86	
P =	32	inches
$L_{M\ TOTAL\ PROJECT}$ =	145661	lbs.

* The values entered in these fields should be for the total project area.

Number of drainage basins / outfalls areas leaving the plan area = 1

2. Drainage Basin Parameters (This information should be provided for each basin):

Drainage Basin/Outfall Area No. = D

Total drainage basin/outfall area =	36.41	acres
Predevelopment impervious area within drainage basin/outfall area =	13.92	acres
Post-development impervious area within drainage basin/outfall area =	32.18	acres
Post-development impervious fraction within drainage basin/outfall area =	0.88	
$L_{M\ THIS\ BASIN}$ =	15894	lbs.

3. Indicate the proposed BMP Code for this basin.

Proposed BMP = Wet Basin
Removal efficiency = 93 percent

Aqualogic Cartridge Filter
Bioretention
Batch Detention Basin
BaySeparator
Contech StormFilter
Constructed Wetland
Extended Detention
Grassy Swale
Retention / Irrigation
Sand Filter
Stormceptor
Vegetated Filter Strips
Vortechs
Wet Basin
Wet Vault

4. Calculate Maximum TSS Load Removed (L_R) for this Drainage Basin by the selected BMP Type.

RG-348 Page 3-33 Equation 3.7: L_R = (BMP efficiency) x P x (A_I x 34.6 + A_P x 0.54)

where:
A_C = Total On-Site drainage area in the BMP catchment area
A_I = Impervious area proposed in the BMP catchment area
A_P = Pervious area remaining in the BMP catchment area
L_R = TSS Load removed from this catchment area by the proposed BMP

A_C =	36.41	acres
A_I =	32.18	acres
A_P =	4.23	acres
L_R =	33204	lbs

5. Calculate Fraction of Annual Runoff to Treat the drainage basin / outfall area

Desired $L_{M\ THIS\ BASIN}$ = 15900 lbs.

F = 0.48

6. Calculate Capture Volume required by the BMP Type for this drainage basin / outfall area. Calculations from RG-348 Pages 3-34 to 3-36

Rainfall Depth =	0.40	inches
Post Development Runoff Coefficient =	0.72	
On-site Water Quality Volume =	37773	cubic feet

Calculations from RG-348 Pages 3-36 to 3-37

Off-site area draining to BMP =	82.90	acres
Off-site Impervious cover draining to BMP =	1.85	acres
Impervious fraction of off-site area =	0.02	
Off-site Runoff Coefficient =	0.05	
Off-site Water Quality Volume =	5540	cubic feet
Storage for Sediment =	8662	
Total Capture Volume (required water quality volume(s) x 1.20) =	51975	cubic feet

Texas Commission on Environmental Quality

TSS Removal Calculations 04-20-2009

Project Name: 183N
Date Prepared: 3/29/2023
Basin ID: Basin D Woods Pond

Additional information is provided for cells with a red triangle in the upper right corner. Place the cursor over the cell.
Text shown in blue indicate location of instructions in the Technical Guidance Manual - RG-348.
Characters shown in red are data entry fields.
Characters shown in black (Bold) are calculated fields. Changes to these fields will remove the equations used in the spreadsheet.

1. The Required Load Reduction for the total project: Calculations from RG-348 Pages 3-27 to 3-30

Page 3-29 Equation 3.3: $L_M = 27.2(A_N \times P)$

where:
$L_{M\ TOTAL\ PROJECT}$ = Required TSS removal resulting from the proposed development = 80% of increased load
A_N = Net increase in impervious area for the project
P = Average annual precipitation, inches

Site Data: Determine Required Load Removal Based on the Entire Project

County =	Williamson	
Total project area included in plan * =	445.40	acres
Predevelopment impervious area within the limits of the plan * =	217.24	acres
Total post-development impervious area within the limits of the plan* =	384.59	acres
Total post-development impervious cover fraction * =	0.86	
P =	32	inches
$L_{M\ TOTAL\ PROJECT}$ =	145661	lbs.

* The values entered in these fields should be for the total project area.

Number of drainage basins / outfalls areas leaving the plan area = 1

2. Drainage Basin Parameters (This information should be provided for each basin):

Drainage Basin/Outfall Area No. = D

Total drainage basin/outfall area =	36.41	acres
Predevelopment impervious area within drainage basin/outfall area =	13.92	acres
Post-development impervious area within drainage basin/outfall area =	32.18	acres
Post-development impervious fraction within drainage basin/outfall area =	0.88	
$L_{M\ THIS\ BASIN}$ =	15894	lbs.

3. Indicate the proposed BMP Code for this basin.

Proposed BMP = Wet Basin
Removal efficiency = 93 percent

Aqualogic Cartridge Filter
Bioretention
Batch Detention Basin
BaySeparator
Contech StormFilter
Constructed Wetland
Extended Detention
Grassy Swale
Retention / Irrigation
Sand Filter
Stormceptor
Vegetated Filter Strips
Vortechs
Wet Basin
Wet Vault

4. Calculate Maximum TSS Load Removed (L_R) for this Drainage Basin by the selected BMP Type.

RG-348 Page 3-33 Equation 3.7: L_R = (BMP efficiency) x P x (A_I x 34.6 + A_P x 0.54)

where:
A_C = Total On-Site drainage area in the BMP catchment area
A_I = Impervious area proposed in the BMP catchment area
A_P = Pervious area remaining in the BMP catchment area
L_R = TSS Load removed from this catchment area by the proposed BMP

A_C =	36.41	acres
A_I =	32.18	acres
A_P =	4.23	acres
L_R =	33204	lbs

5. Calculate Fraction of Annual Runoff to Treat the drainage basin / outfall area

Desired $L_{M\ THIS\ BASIN}$ = 23400 lbs.

F = 0.70

6. Calculate Capture Volume required by the BMP Type for this drainage basin / outfall area. Calculations from RG-348 Pages 3-34 to 3-36

Rainfall Depth =	0.78	inches
Post Development Runoff Coefficient =	0.72	
On-site Water Quality Volume =	74019	cubic feet

Calculations from RG-348 Pages 3-36 to 3-37

Off-site area draining to BMP =	82.90	acres
Off-site Impervious cover draining to BMP =	1.85	acres
Impervious fraction of off-site area =	0.02	
Off-site Runoff Coefficient =	0.05	
Off-site Water Quality Volume =	10856	cubic feet
Storage for Sediment =	16975	
Total Capture Volume (required water quality volume(s) x 1.20) =	101850	cubic feet

APPENDIX G
WATER QUALITY STRUCTURE PLAN AND PROFILE

WATER QUALITY BASINS 1A, 1B, 1C, 2A, 2B, 2C, and 2D2

1. THE CONTRACTOR IS TO SUBMIT SHOP DRAWINGS FOR ENGINEER APPROVAL FOR THE JELLYFISH FILTRATION SYSTEMS TO BE USED AT EACH BASIN.

2. THE JELLYFISH FILTRATION SYSTEMS ARE TO BE INSTALLED ALONG WITH SPLITTER STRUCTURES, INLET AND OUTLET PIPES PRIOR TO ABANDONING EXISTING VAULT SYSTEMS.

3. UPON INSTALLATION OF THE JELLYFISH FILTRATION SYSTEMS, POST CONSTRUCTION INSPECION IS REQUIRED IN ACCORDANCE WITH TCEQ RG-348 GUIDELINES PRIOR TO PUTTING THE JELLYFISH SYSTEM INTO SERVICE.

4. UPON PLACEMENT OF THE JELLYFISH FILTRATION SYSTEMS IN SERVICE, EXISTING INLET AND OUTLET PIPES TO THE VAULTS WILL BE REMOVED OR CAPPED AND ABANDON AS SHOWN IN THE PROJECT PLANS. THE VAULTS WILL BE DEWATERED THROUGH "ULTRA-DEWATERING BAGS" OR APPROVED EQUAL PER TxDOT SPECIAL SPECIFICATION 4091. DEWATERING BAGS TO BE SPECIFIED TO DETAIN BOTH OIL AND SEDIMENT/ SILT. IF FLOATABLE HAZARDOUS MATERIALS WERE FOUND PRIOR TO DEWATERING, DISPOSE OF THE BAG PROPERLY. THE EXISTING VAULTS WILL BE FILLED WITH SAND BACKFILL TO THE TOP OF THE EXISTING VAULT LIDS. THE VAULT LIDS WILL BE REMOVED TO A DEPTH OF 1 FT. BELOW THE EXISTING SURFACE AND THE OPENING CAPPED.

VAULT 2D1

1. REMOVE THE VAULT LID AND STRUCTURALLY STABILIZE VAULT WALLS.

2. REMOVE AND PROPERLY DISPOSE OF FLOATABLES FROM THE VAULT (IE PLASTIC BAGS AND BOTTLES).

3. VISUALLY INSPECT AND TEST STANDING WATER FOR OIL AND OTHER FLOATABLE HAZARDOUS MATERIALS.

4. DEWATER STANDING WATER IN THE VAULT TO A DEPTH OF 2IN ABOVE THE SEDIMENT ELEVATION. DEWATER THROUGH "ULTRA-DEWATERING BAGS" OR APPROVED EQUAL PER TxDOT SPECIAL SPECIFICATION 4091. DEWATERING BAGS TO BE SPECIFIED TO DETAIN BOTH OIL AND SEDIMENT/ SILT. IF FLOATABLE HAZARDOUS MATERIALS WERE FOUND PRIOR TO DEWATERING, DISPOSE OF THE BAG PROPERLY.

5. DEWATER CLEAN WATER INTO DOWNSTREAM SIDE OF FLOW SPLITTER BOX.

6. VISUALLY INSPECT AND TEST REMAINING SEDIMENT FOR HAZARDOUS MATERIALS. REMOVE SEDIMENT AND DISPOSE OF PROPERLY UPON CONCLUSION OF TESTING.

7. TEMPORALLY PLUG AND WATER SEAL THE OUTLET PIPE FROM THE VAULT.

8. MAINTAIN OPERATION OF SEDIMENT CONTROL IN VAULT DURING CONSTRUCTION. DURING AND AFTER STORM EVENTS DEWATER THE VAULT THROUGH THE USE OF DEWATER BAGS. DISCHARGE CLEAN WATER ON THE DOWNSTREAM SIDE OF THE FLOW DIVERSION STRUCTURE. MAINTAIN TEMPORARY SEDIMENT CONTROL FACILITIES UNTIL VAULT RECONSTRUCTION IS COMPLETED, INSPECTED, AND APPROVED.

POND SPRINGS POND (POND C)

1. REMOVE AND PROPERLY DISPOSE OF FLOATABLES FROM THE POND (IE PLASTIC BAGS AND BOTTLES).

2. VISUALLY INSPECT AND TEST STANDING WATER FOR OIL AND OTHER FLOATABLE HAZARDOUS MATERIALS.

3. DEWATER STANDING WATER IN THE POND TO A DEPTH OF 2IN ABOVE THE SEDIMENT ELEVATION. DEWATER THROUGH "ULTRA-DEWATERING BAGS" OR APPROVED EQUAL PER TxDOT SPECIAL SPECIFICATION 4091. DEWATERING BAGS TO BE SPECIFIED TO DETAIN BOTH OIL AND SEDIMENT/ SILT. IF FLOATABLE HAZARDOUS MATERIALS WERE FOUND PRIOR TO DEWATERING, DISPOSE OF THE BAG PROPERLY.

4. DEWATER CLEAN WATER INTO DOWNSTREAM SIDE OF FLOW SPLITTER BOX.

5. VISUALLY INSPECT AND TEST REMAINING SEDIMENT FOR HAZARDOUS MATERIALS. REMOVE SEDIMENT AND DISPOSE OF PROPERLY UPON CONCLUSION OF TESTING.

6. TEMPORARILY PLUG AND WATER SEAL THE OUTLET PIPE FROM THE POND.

7. MAINTAIN OPERATION OF SEDIMENT CONTROL IN POND DURING CONSTRUCTION. DURING AND AFTER STORM EVENTS DEWATER THE POND THROUGH THE USE OF DEWATER BAGS. DISCHARGE CLEAN WATER ON THE DOWNSTREAM SIDE OF THE FLOW DIVERSION STRUCTURE. MAINTAIN TEMPORARY SEDIMENT CONTROL FACILITIES UNTIL POND RECONSTRUCTION IS COMPLETED, INSPECTED, AND APPROVED.

WOODS POND (POND D)

01

1. REMOVE AND PROPERLY DISPOSE OF FLOATABLES FROM THE POND (IE PLASTIC BAGS AND BOTTLES).

2. VISUALLY INSPECT AND TEST STANDING WATER FOR OIL AND OTHER FLOATABLE HAZARDOUS MATERIALS.

3. DEWATER STANDING WATER IN THE POND TO A DEPTH OF 2IN ABOVE THE SEDIMENT ELEVATION. DEWATER THROUGH "ULTRA-DEWATERING BAGS" OR APPROVED EQUAL PER TxDOT SPECIAL SPECIFICATION 4091. DEWATERING BAGS TO BE SPECIFIED TO DETAIN BOTH OIL AND SEDIMENT/ SILT. IF FLOATABLE HAZARDOUS MATERIALS WERE FOUND PRIOR TO DEWATERING, DISPOSE OF THE BAG PROPERLY.

4. DEWATER CLEAN WATER INTO CHANNEL DOWNSTREAM OF POND.

5. VISUALLY INSPECT AND TEST REMAINING SEDIMENT FOR HAZARDOUS MATERIALS. REMOVE SEDIMENT AND DISPOSE OF PROPERLY UPON CONCLUSION OF TESTING.

6. TEMPORARILY PLUG AND WATER SEAL THE OUTFALL STRUCTURES FROM THE POND.

7. MAINTAIN OPERATION OF SEDIMENT CONTROL IN POND DURING CONSTRUCTION. DURING AND AFTER STORM EVENTS DEWATER THE POND THROUGH THE USE OF DEWATER BAGS. DISCHARGE CLEAN WATER ON THE DOWNSTREAM SIDE OF THE FLOW DIVERSION STRUCTURE. MAINTAIN TEMPORARY SEDIMENT CONTROL FACILITIES UNTIL POND RECONSTRUCTION IS COMPLETED, INSPECTED, AND APPROVED.

RELEASED FOR CONSTRUCTION 2024.01.25 14:41:09 -06'00'

STATE OF TEXAS
JEREMY HUTCHINS
134720
LICENSED PROFESSIONAL ENGINEER

2024.01.25 14:39:34 -06'00'

ISSUE RECORD

NO.	DESCRIPTION	DATE
00	RFC DESIGN	29MAR23
01	NDC 0133	20DEC23

CENTRAL TEXAS REGIONAL MOBILITY AUTHORITY

GREAT HILLS CONSTRUCTORS

PARSONS
TBPE Registration No. F-1481

183 NORTH MOBILITY
SEGMENT 1A
WATER QUALITY PLANS
GENERAL NOTES

DESIGNED	FED. RD. DIV. NO.		FEDERAL AID PROJECT NO.	HIGHWAY NO.
RG	6			US 183
DRAWN	STATE	DISTRICT	COUNTY	DRAWING
RG	TEXAS	AUSTIN	TRAVIS, WILLIAMSON	1AWQGNO1
CHECKED	CONTROL	SECTION	JOB	SHEET NO.
MM	0151	06	143	1AWQ006
APPROVED				
SB				

User: p003330E Date: 1/25/2024 Time: 2:32:17 PM Pen Table: 183N_Standard.tbl Plot Config: 183N PDF.pltcfg
File Name: 1A-WQGN-01.dgn

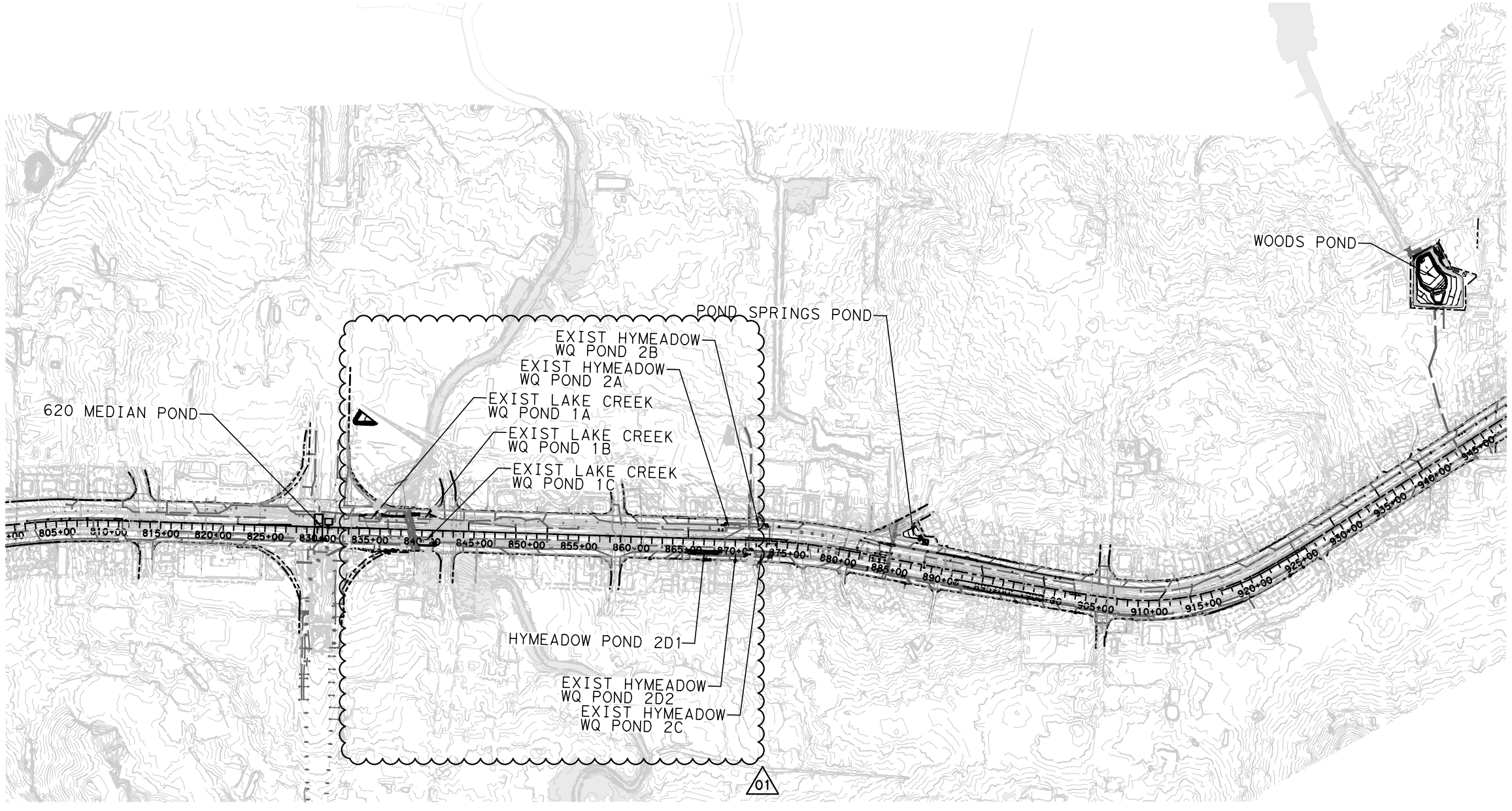

HORIZONTAL SCALE
0' 500' 1000'

RELEASED FOR CONSTRUCTION 2024.01.25 14:41:12 -06'00'

STATE OF TEXAS
JEREMY HUTCHINS
134720
LICENSED PROFESSIONAL ENGINEER

2024.01.25 14:39:35 -06'00'

ISSUE RECORD

NO.	DESCRIPTION	DATE
00	RFC DESIGN	29MAR23
01	NDC 0133	20DEC23

CENTRAL TEXAS REGIONAL MOBILITY AUTHORITY

GREAT HILLS CONSTRUCTORS

PARSONS
TBPE Registration No. F-1481

183 NORTH MOBILITY
SEGMENT 1A
WATER QUALITY PLANS
KEY MAP

DESIGNED	FED. RD. DIV. NO.		FEDERAL AID PROJECT NO.	HIGHWAY NO.
KJ	6			US 183
DRAWN	STATE	DISTRICT	COUNTY	DRAWING
VY	TEXAS	AUSTIN	TRAVIS, WILLIAMSON	1AWQGN02
CHECKED	CONTROL	SECTION	JOB	SHEET NO.
MM	0151	06	143	1AWQ007
APPROVED				
SB				

User: p003330E Date: 1/25/2024 Time: 2:33:03 PM Pen Table: 183N_Standard.tbl Plot Config: 183N PDF.pltcfg
File Name: 1A-WQGN-02.dgn

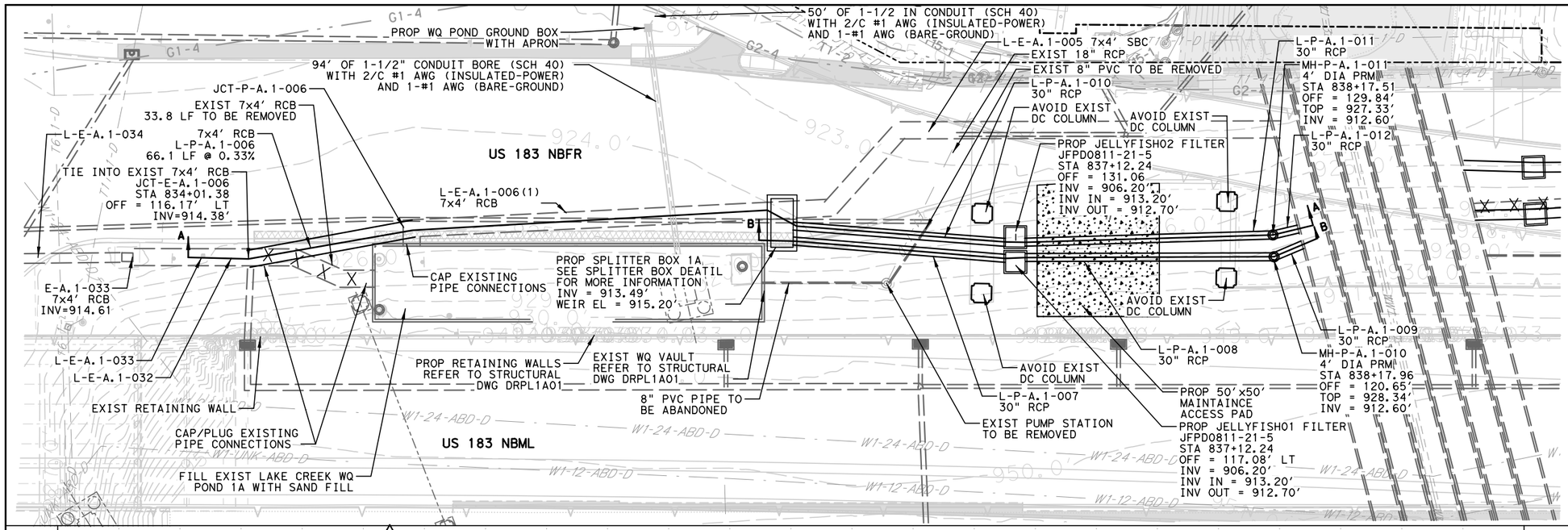

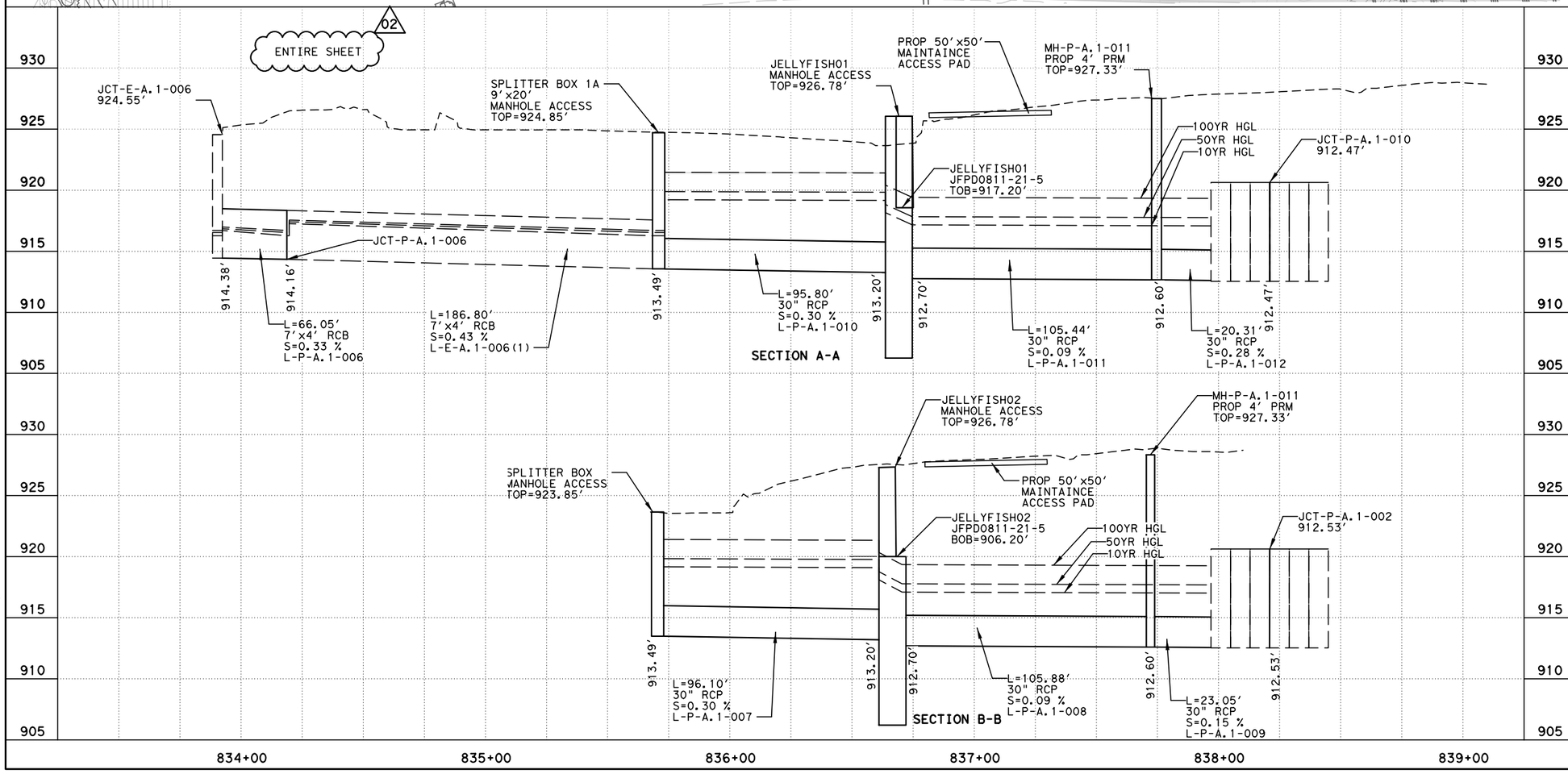



NOTES:
1. ELEVATIONS SHOW HEREON WERE DERIVED FROM AS-BUILT PLANS PROVIDED TO PARSONS.

2. CONTRACTOR SHALL FIELD VERIFY INVERT ELEVATIONS WITHIN THE EXISTING VAULT, SPLITTER BOX OPENINGS, AND UPSTREAM AND DOWNSTREAM CONNECTIONS TO EXISTING CULVERTS AND/OR STORM SEWERS PRIOR TO THE START OF WORK; CONTRACTOR SHALL BE RESPONSIBLE FOR REPORTING ANY DISCREPANCIES BETWEEN FIELD SURVEYED ELEVATIONS AND THE ELEVATIONS SHOWN ON THESE PLANS IMMEDIATELY TO THE PROJECT ENGINEER PRIOR TO THE START OF WORK.

LEGEND

- EXIST RIGHT-OF-WAY
- EXIST STORM SEWER
- PROP STORM SEWER
- EXIST CONTOURS
- PROP CONTOURS
- 10" FLEX BASE PROP PAVING
- PROP CONCRETE
- PROP PAVEMENT

RELEASED FOR CONSTRUCTION 2024.01.25 14:41:17 -06'00'

STATE OF TEXAS
JEREMY HUTCHINS
134720
LICENSED PROFESSIONAL ENGINEER

2024.01.25 14:39:44 -06'00'

ISSUE RECORD

NO.	DESCRIPTION	DATE
00	RFC DESIGN	29MAR23
01	NDC 0082	30JUN23
02	NDC 0133	20DEC23

CENTRAL TEXAS REGIONAL MOBILITY AUTHORITY

GREAT HILLS CONSTRUCTORS

PARSONS
TBPE Registration No. F-1481

183 NORTH MOBILITY
SEGMENT 1A
BASIN LAYOUT
LAKE CREEK WATER QUALITY
BASIN 1A (BASIN A)

DESIGNED	FED. RD. DIV. NO.		FEDERAL AID PROJECT NO.	HIGHWAY NO.
KR	6			US 183
DRAWN	STATE	DISTRICT	COUNTY	DRAWING
RG	TEXAS	AUSTIN	TRAVIS, WILLIAMSON	1ADRVLT1A
CHECKED	CONTROL	SECTION	JOB	SHEET NO.
MM	0151	06	143	1AWQ008
APPROVED				
SB				

User: p003330E Date: 1/25/2024 Time: 2:33:29 PM Pen Table: 183N_Standard.tbl Plot Config: 183N PDF.pltcfg
File Name: 1ADRVLT1A.dgn

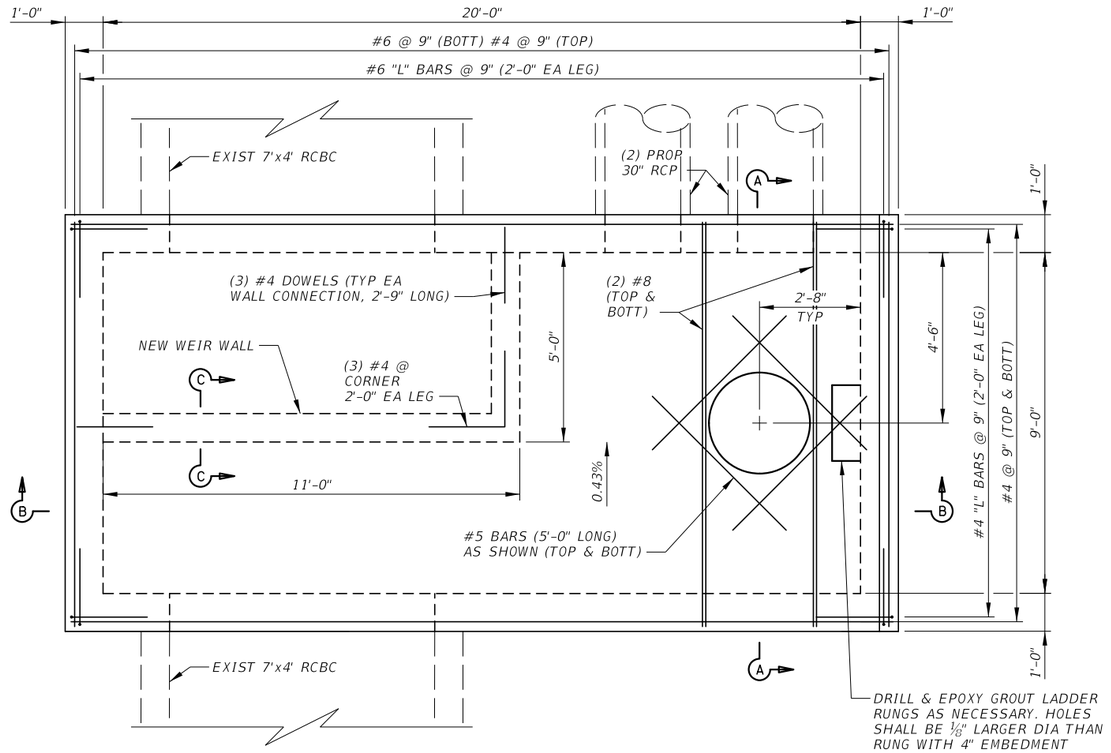

SPLITTER BOX ROOF PLAN
SCALE: 1/4" = 1'-0"

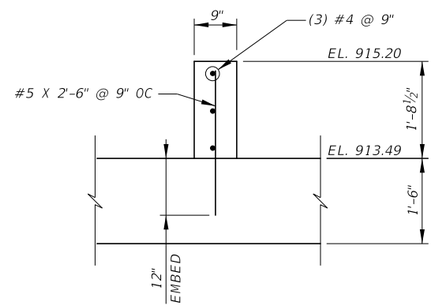

SECTION C-C
SCALE: 3/8" = 1'-0"

NOTES:

1. DESIGNED IN ACCORDANCE WITH AASHTO LRFD SPECIFICATIONS (2017) WITH CURRENT INTERIM REVISIONS AS MODIFIED BY TxDOT DESIGN PRACTICES.
2. PROVIDE CLASS C CONCRETE (f'c = 3,600 psi).
3. PROVIDE GRADE 60 REINFORCING STEEL. ALL REINFORCING SHALL BE EPOXY COATED.
4. SEE SHEET 1AWQ018B FOR WALL OPENING DETAILS.
5. REFER TO WATER QUALITY PLANS FOR PIPE OR CULVERT INVERT ELEVATIONS.
6. THE INVERT ELEVATION OF EACH OPENING SHALL MATCH THE SLOPING SLAB ELEVATION OF THE SPLITTER BOX.

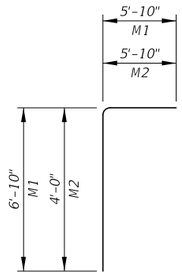

BARS M (#6)

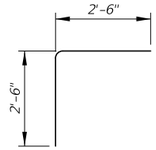

BARS L (#4)

NEW SHEET

RELEASED FOR CONSTRUCTION 2024.01.16 13:34:20 -05'00'

STATE OF TEXAS
CHAD D. BINION
145371
LICENSED PROFESSIONAL ENGINEER

2024.01.16 13:34:10 -05'00'

ISSUE RECORD

NO.	DESCRIPTION	DATE
00	NDC-0133	20DEC23

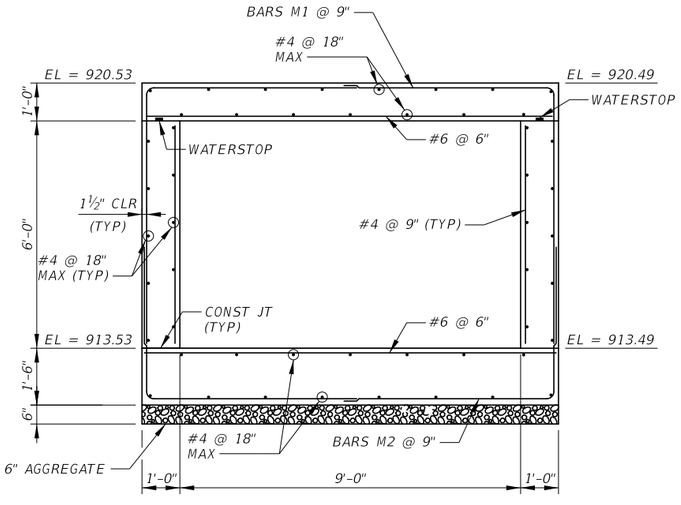

SECTION A-A
SCALE: 1/4" = 1'-0"

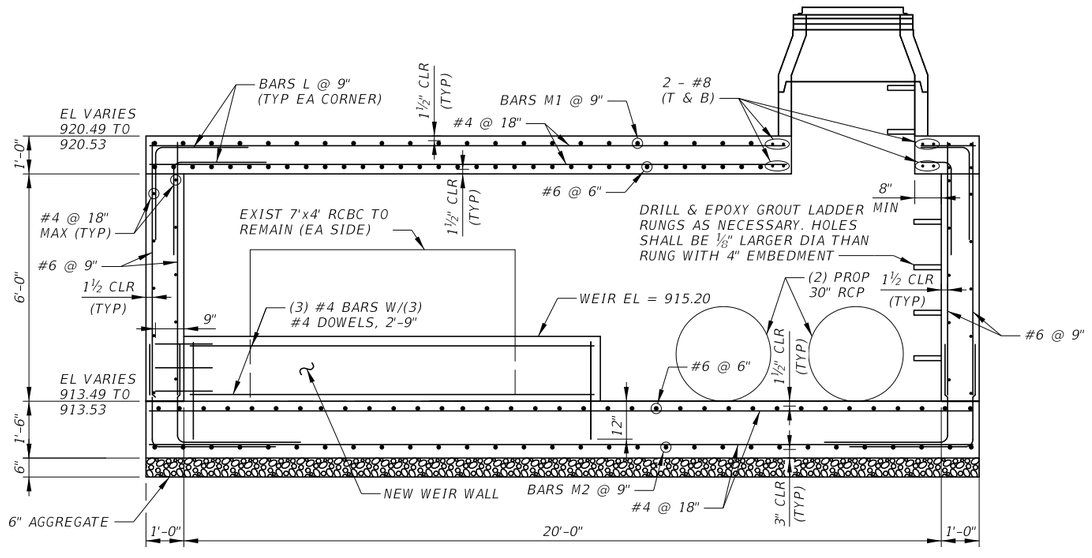

SECTION B-B
SCALE: 1/4" = 1'-0"

CENTRAL TEXAS REGIONAL MOBILITY AUTHORITY

GREAT HILLS CONSTRUCTORS

PARSONS
TBPE Registration No. F-1481

183 NORTH MOBILITY
SEGMENT 1A - LAKECREEK WQ

1A SPLITTER BOX DETAILS (SHEET 1 OF 2)

DESIGNED	FED. RD. DIV. NO.		FEDERAL AID PROJECT NO.	HIGHWAY NO.
CB	6			US 183
DRAWN	STATE	DISTRICT	COUNTY	DRAWING
JC	TEXAS	AUSTIN	TRAVIS, WILLIAMSON	1AWQDT03
CHECKED	CONTROL	SECTION	JOB	SHEET NO.
SS	0151	06	143	1AWQ018A
APPROVED				
WD				

User: p004436F Date: 1/16/2024 Time: 1:32:33 PM Pen Table: 183N_Standard.tbl Plot Config: 183N PDF.pltcfg
File Name: 1AWQDT03.dgn

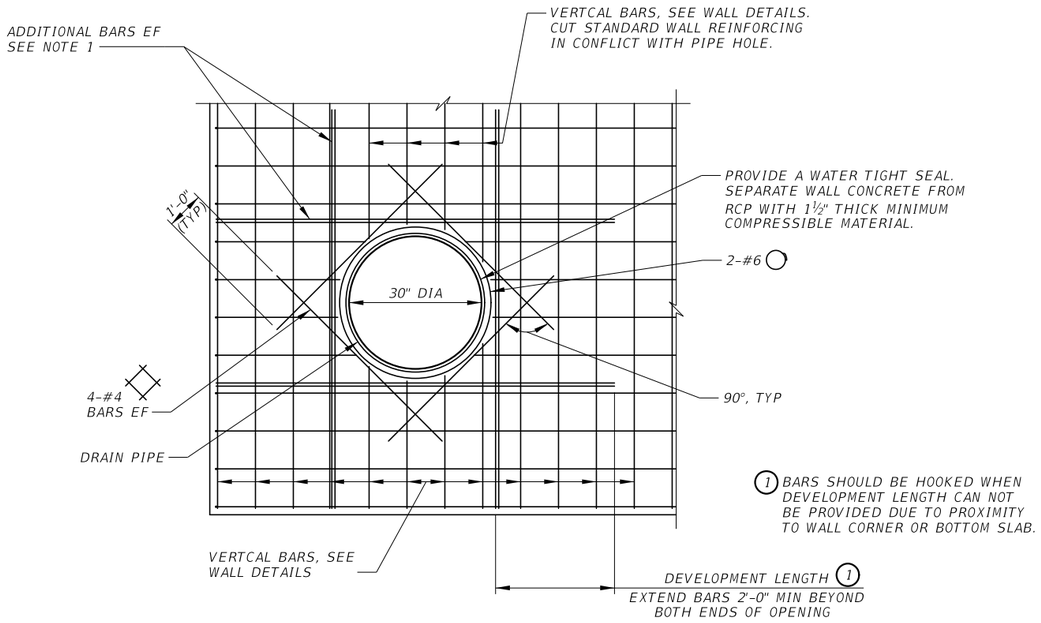

TYPICAL WALL OPENING DETAIL

N.T.S.

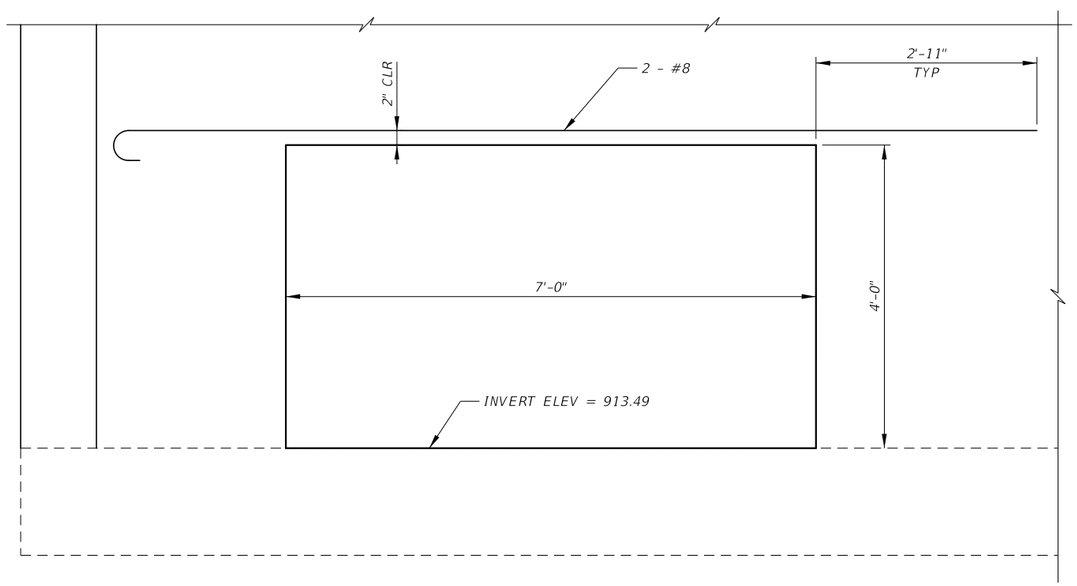

7 x 4 CULVERT WALL OPENING ADDITIONAL REINFORCEMENT

(ONE OPENING IN EACH WALL RW1A-3 & RW1A-5)
SCALE: ½" = 1'-0"

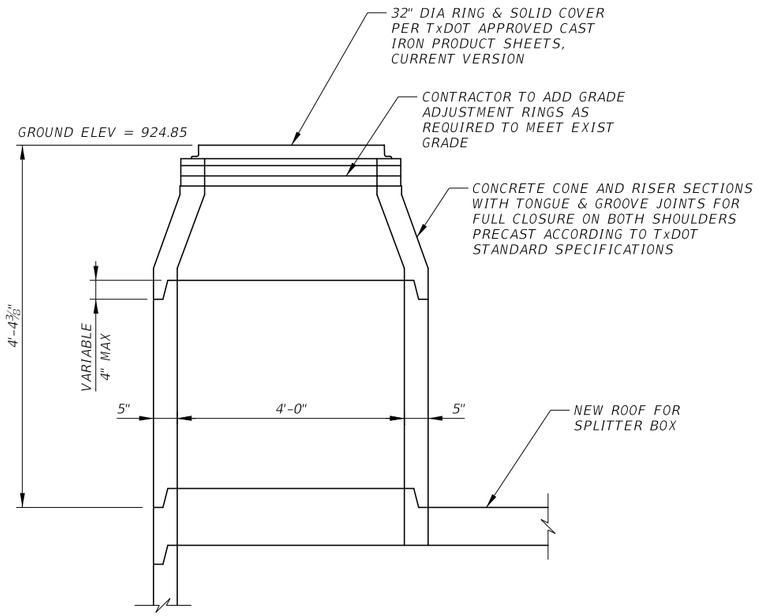

1A MANHOLE DETAIL

N.T.S.

NOTES:

1. ADJACENT TO EACH SIDE OF THE OPENING, PLACE ADDITIONAL REINFORCEMENT EQUAL TO HALF THE INTERRUPTED MAIN REINFORCEMENT.
2. REPAIR CONCRETE SURFACES AFTER SAWCUTTING AND DRILLING DOWELS ACCORDING TO TXDOT CONCRETE REPAIR MANUAL.

NEW SHEET

RELEASED FOR CONSTRUCTION 2024.01.15 10:35:03 -05'00'

STATE OF TEXAS
CHAD D. BINION
145371
PROFESSIONAL ENGINEER

2024.01.15 10:34:46 -05'00'

ISSUE RECORD

NO.	DESCRIPTION	DATE
00	NDC-0133	20DEC23

CENTRAL TEXAS REGIONAL MOBILITY AUTHORITY

GREAT HILLS CONSTRUCTORS

PARSONS
TBPE Registration No. F-1481

183 NORTH MOBILITY
SEGMENT 1A - LAKECREEK WQ

1A SPLITTER BOX DETAILS (SHEET 2 OF 2)

DESIGNED	FED. RD. DIV. NO.		FEDERAL AID PROJECT NO.	HIGHWAY NO.
CB	6			US 183
DRAWN	STATE	DISTRICT	COUNTY	DRAWING
JG	TEXAS	AUSTIN	TRAVIS, WILLIAMSON	1AWQDT04
CHECKED	CONTROL	SECTION	JOB	SHEET NO.
HA	0151	06	143	1AWQ008B
APPROVED				
WD				

User: p0041844 Date: 1/13/2024 Time: 8:52:34 AM Pen Table: 183N_Standard.tbl Plot Config: 183N PDF.pltcfg
File Name: 1AWQDT04.dgn

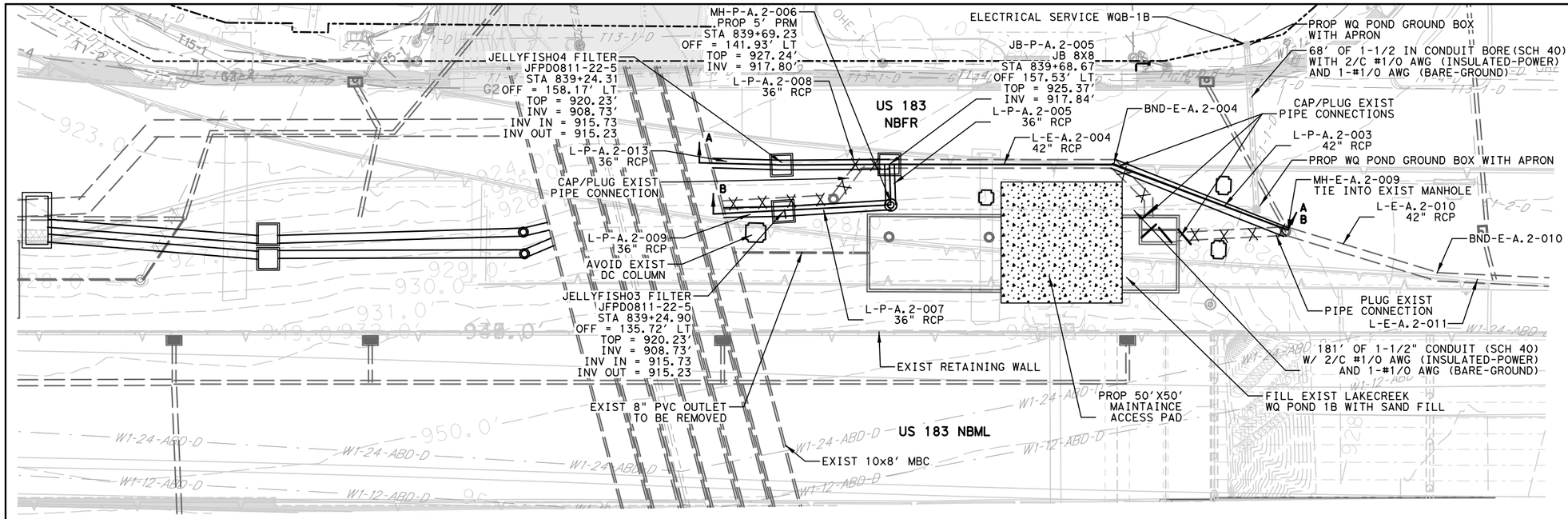

HORIZONTAL SCALE
0' 25' 50'
0' 5' 10'
VERTICAL SCALE

NOTES:
1. ELEVATIONS SHOW HEREON WERE DERIVED FROM AS-BUILT PLANS PROVIDED TO PARSONS.

2. CONTRACTOR SHALL FIELD VERIFY INVERT ELEVATIONS WITHIN THE EXISTING VAULT, SPLITTER BOX OPENINGS, AND UPSTREAM AND DOWNSTREAM CONNECTIONS TO EXISTING CULVERTS AND/OR STORM SEWERS PRIOR TO THE START OF WORK; CONTRACTOR SHALL BE RESPONSIBLE FOR REPORTING ANY DISCREPANCIES BETWEEN FIELD SURVEYED ELEVATIONS AND THE ELEVATIONS SHOWN ON THESE PLANS IMMEDIATELY TO THE PROJECT ENGINEER PRIOR TO THE START OF WORK.

LEGEND

- EXIST RIGHT-OF-WAY
- EXIST STORM SEWER
- PROP STORM SEWER
- EXIST CONTOURS
- PROP CONTOURS
- 10" FLEX BASE PROP PAVING
- PROP CONCRETE
- PROP PAVEMENT

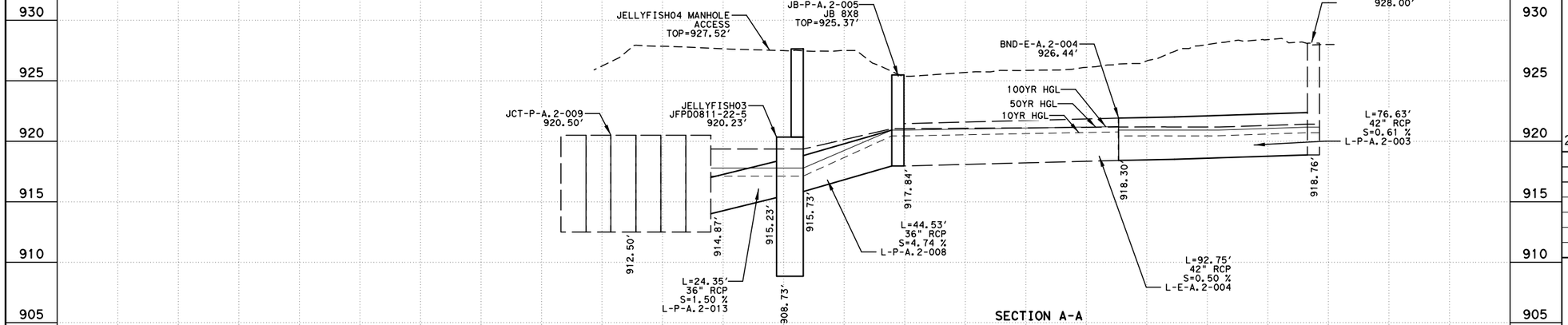

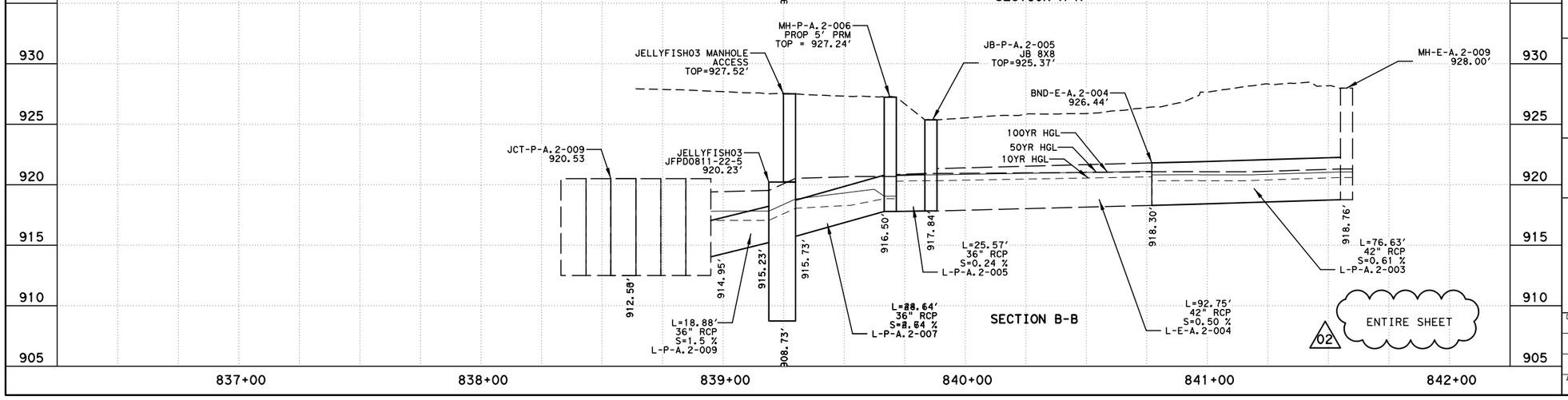

837+00 838+00 839+00 840+00 841+00 842+00

RELEASED FOR CONSTRUCTION 2024.01.25 14:41:19 -06'00'

STATE OF TEXAS
JEREMY HUTCHINS
134720
LICENSED PROFESSIONAL ENGINEER
2024.01.25 14:39:45 -06'00'

ISSUE RECORD

NO.	DESCRIPTION	DATE
00	RFC DESIGN	29MAR23
01	NDC 0082	30JUN23
02	NDC 0133	20DEC23

CENTRAL TEXAS REGIONAL MOBILITY AUTHORITY

GREAT HILLS CONSTRUCTORS

PARSONS
TBPE Registration No. F-1481

183 NORTH MOBILITY
SEGMENT 1A
BASIN LAYOUT
LAKE CREEK WATER QUALITY
BASIN 1B (BASIN A)

DESIGNED	FED. RD. DIV. NO.	FEDERAL AID PROJECT NO.	HIGHWAY NO.
KJ	6		US 183
DRAWN RG	STATE / DISTRICT	COUNTY	DRAWING
CHECKED MM	TEXAS / AUSTIN	TRAVIS, WILLIAMSON	1ADRVLT1B
APPROVED SB	CONTROL / SECTION	JOB	SHEET NO.
	0151 / 06	143	1AWQ009

User: p003330E Date: 1/25/2024 Time: 2:33:42 PM Pen Table: 183N_Standard.tbl Plot Config: 183N PDF.pltcfg
File Name: 1ADRVLT1B.dgn

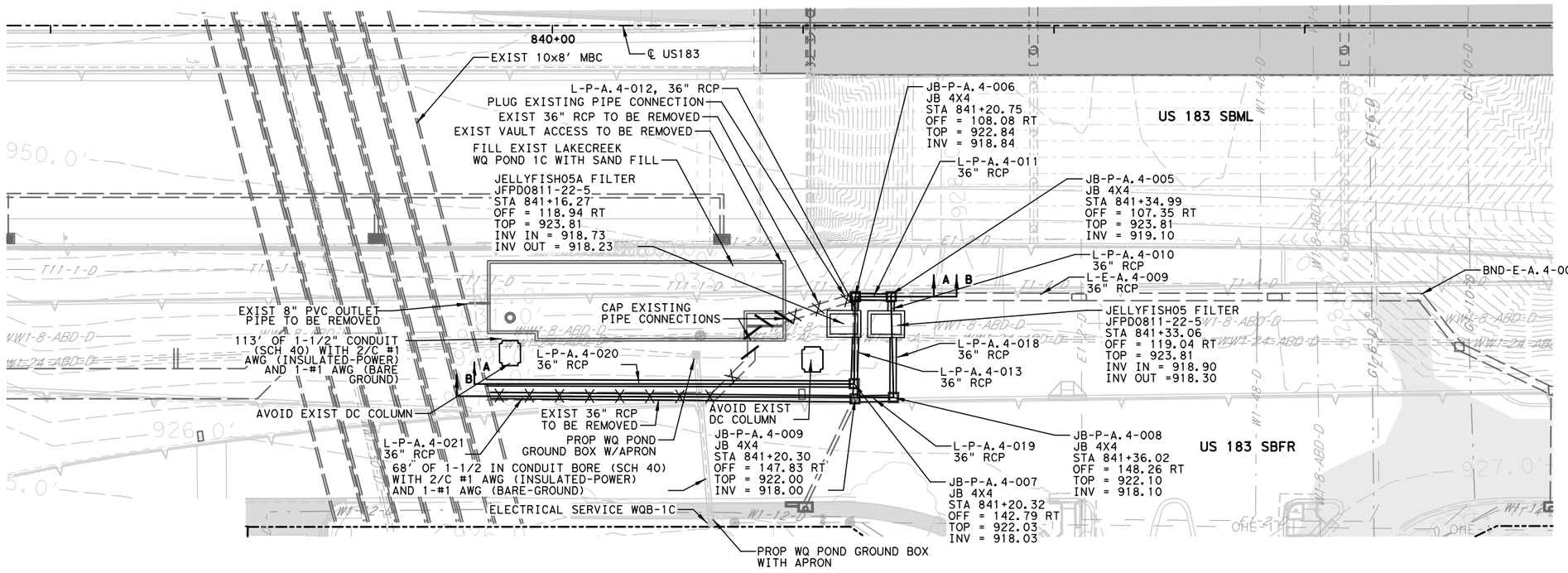

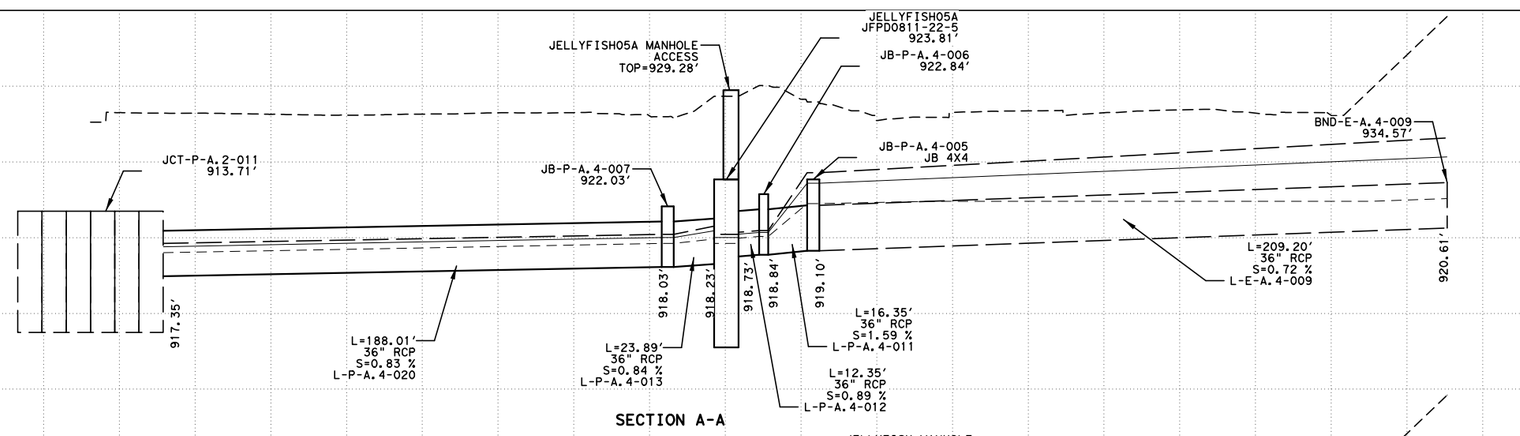

ENTIRE SHEET

HORIZONTAL SCALE
0' 25' 50'
0' 5' 10'
VERTICAL SCALE

NOTES:
1. ELEVATIONS SHOW HEREON WERE DERIVED FROM AS-BUILT PLANS PROVIDED TO PARSONS.

2. CONTRACTOR SHALL FIELD VERIFY INVERT ELEVATIONS WITHIN THE EXISTING VAULT, SPLITTER BOX OPENINGS, AND UPSTREAM AND DOWNSTREAM CONNECTIONS TO EXISTING CULVERTS AND/OR SEWERS PRIOR TO THE START OF WORK; CONTRACTOR SHALL BE RESPONSIBLE FOR REPORTING ANY DISCREPANCIES BETWEEN FIELD SURVEYED ELEVATIONS AND THE ELEVATIONS SHOWN ON THESE PLANS IMMEDIATELY TO THE PROJECT ENGINEER PRIOR TO THE START OF WORK.

LEGEND

- EXIST RIGHT-OF-WAY
- EXIST STORM SEWER
- PROP STORM SEWER
- EXIST CONTOURS
- PROP CONTOURS
- 10" FLEX BASE PROP PAVING
- PROP CONCRETE
- PROP PAVEMENT

RELEASED FOR CONSTRUCTION 2024.01.25 14:41:21 -06'00'

STATE OF TEXAS
JEREMY HUTCHINS
134720
LICENSED PROFESSIONAL ENGINEER
2024.01.25 14:39:47 -06'00'

ISSUE RECORD		
NO.	DESCRIPTION	DATE
00	RFC DESIGN	29MAR23
01	NDC 0082	30JUN23
02	NDC 0133	20DEC23

CENTRAL TEXAS REGIONAL MOBILITY AUTHORITY

GREAT HILLS CONSTRUCTORS

PARSONS
TBPE Registration No. F-1481

183 NORTH MOBILITY
SEGMENT 1A
BASIN LAYOUT
LAKE CREEK WATER QUALITY
BASIN 1C (BASIN A)

DESIGNED	FED. RD. DIV. NO.	FEDERAL AID PROJECT NO.	HIGHWAY NO.
KR	6		US 183
DRAWN	STATE	DISTRICT	COUNTY	DRAWING
RG	TEXAS	AUSTIN	TRAVIS, WILLIAMSON	1ADRVLT1C
CHECKED	CONTROL	SECTION	JOB	SHEET NO.
MM	0151	06	143	1AWQ010
APPROVED				
SB				

User: p003330E Date: 1/25/2024 Time: 2:33:55 PM Pen Table: 183N_Standard.tbl Plot Config: 183N PDF.pltcfg
File Name: 1ADRVLT1C.dgn

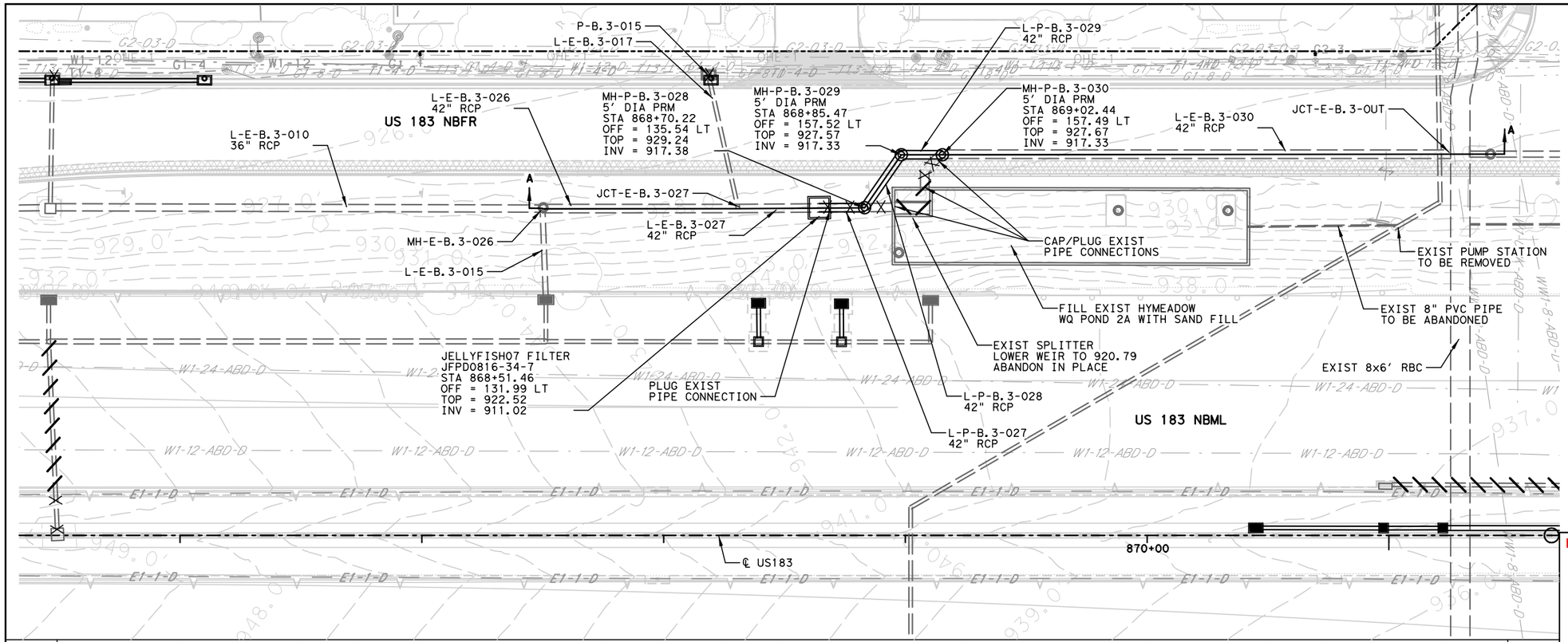

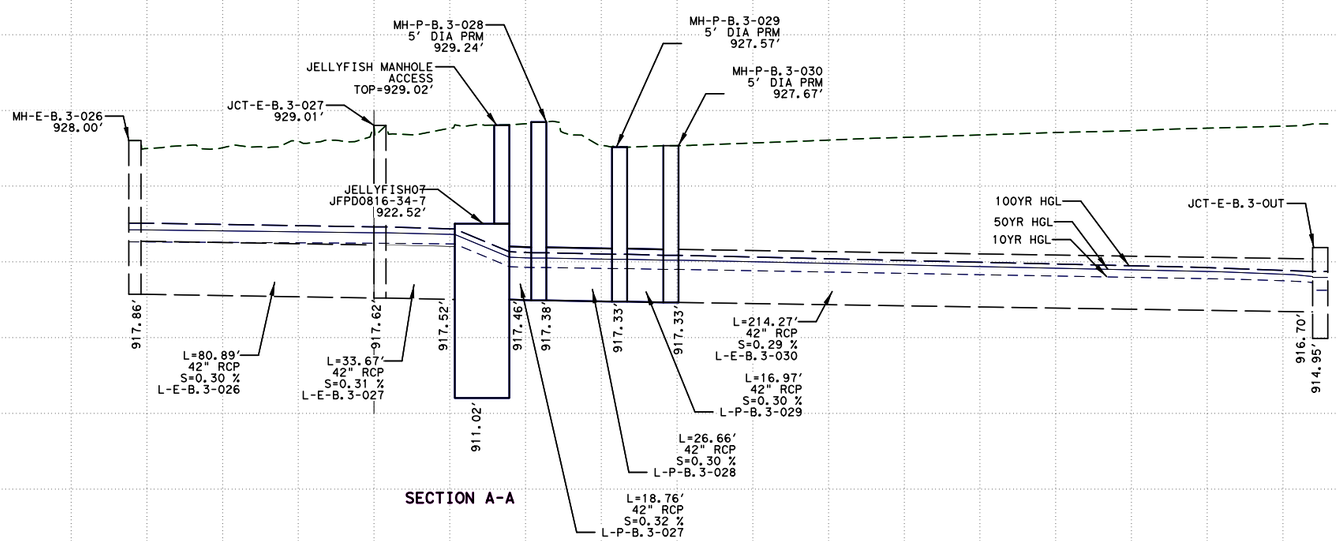

SECTION A-A

02 ENTIRE SHEET

HORIZONTAL SCALE
0' 25' 50'
VERTICAL SCALE
0' 5' 10'

NOTES:
1. ELEVATIONS SHOW HEREON WERE DERIVED FROM AS-BUILT PLANS PROVIDED TO PARSONS.

2. CONTRACTOR SHALL FIELD VERIFY INVERT ELEVATIONS WITHI HYMEADOW STING VAULT, SPLITTER BOX OPENWQ PONDND UPSTREAM AND DOWNSTREAM CONNECT (2B) TO EXISTING CULVERTS AND/OR STORM SEWERS PRIOR TO THE START OF WORK; CONTRACTOR SHALL BE RESPONSIBLE FOR REPORTING ANY DISCREPANCIES BETWEEN FIELD SURVEYED ELEVATIONS AND THE ELEVATIONS SHOWN ON THESE PLANS IMMEDIATELY TO THE PROJECT ENGINEER PRIOR TO THE START OF WORK.

LEGEND

- EXIST RIGHT-OF-WAY
- EXIST STORM SEWER
- PROP STORM SEWER
- EXIST CONTOURS
- PROP CONTOURS
- 10" FLEX BASE PROP PAVING
- PROP CONCRETE
- PROP PAVEMENT

RELEASED FOR CONSTRUCTION 2024.01.25 14:41:22 -06'00'

STATE OF TEXAS
JEREMY HUTCHINS
134720
LICENSED
PROFESSIONAL ENGINEER

2024.01.25 14:39:48 -06'00'

ISSUE RECORD

NO.	DESCRIPTION	DATE
00	RFC DESIGN	29MAR23
01	NDC 0082	30JUN23
02	NDC 0133	20DEC23

CENTRAL TEXAS REGIONAL MOBILITY AUTHORITY

GREAT HILLS CONSTRUCTORS

PARSONS
TBPE Registration No. F-1481

183 NORTH MOBILITY
SEGMENT 1A
BASIN LAYOUT
HYMEADOW WATER QUALITY
BASIN 2A (BASIN B)

DESIGNED	FED. RD. DIV. NO.		FEDERAL AID PROJECT NO.	HIGHWAY NO.
KR	6			US 183
DRAWN	STATE	DISTRICT	COUNTY	DRAWING
RG	TEXAS	AUSTIN	TRAVIS, WILLIAMSON	1ADRVLT2A
CHECKED	CONTROL	SECTION	JOB	SHEET NO.
MM	0151	06	143	1AWQ011
APPROVED				
SB				

User: p003330E Date: 1/25/2024 Time: 2:34:12 PM Pen Table: 183N_Standard.tbl Plot Config:
File Name: 1ADRVLT2A.dgn

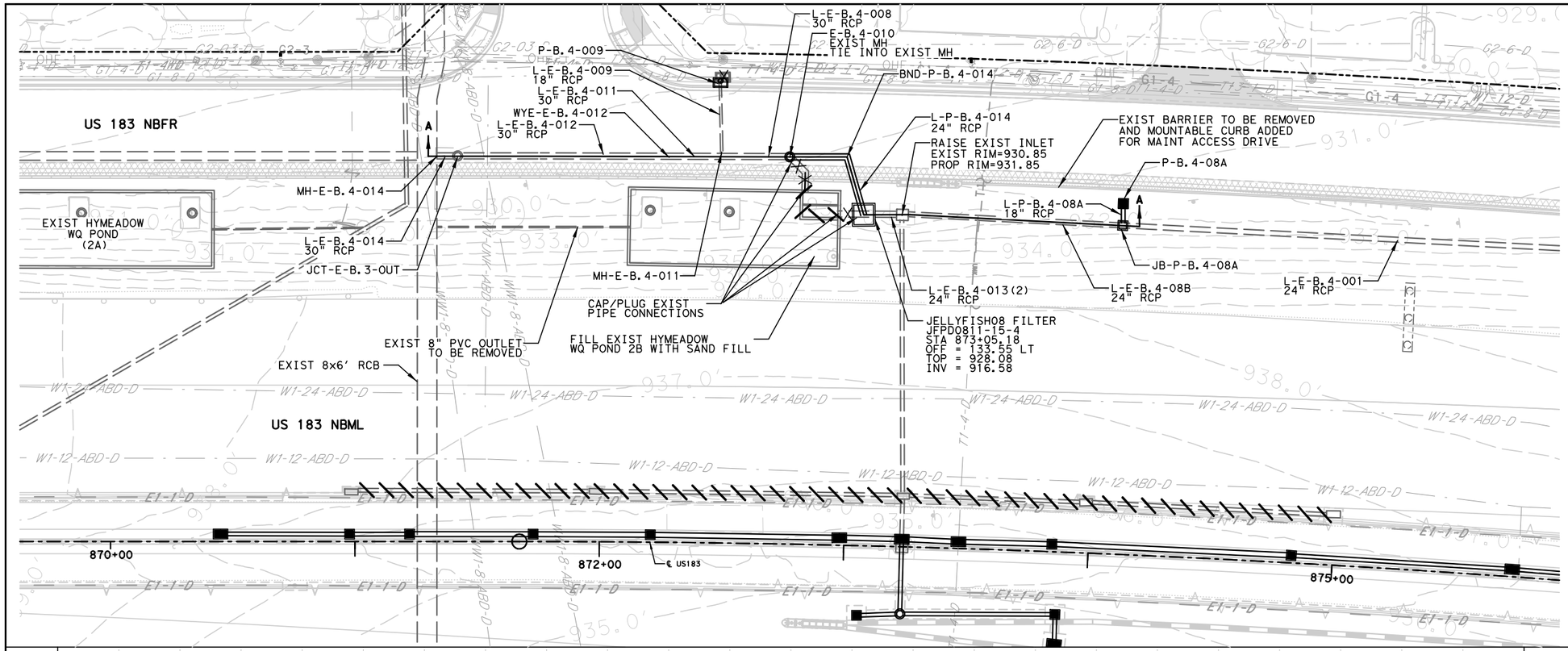

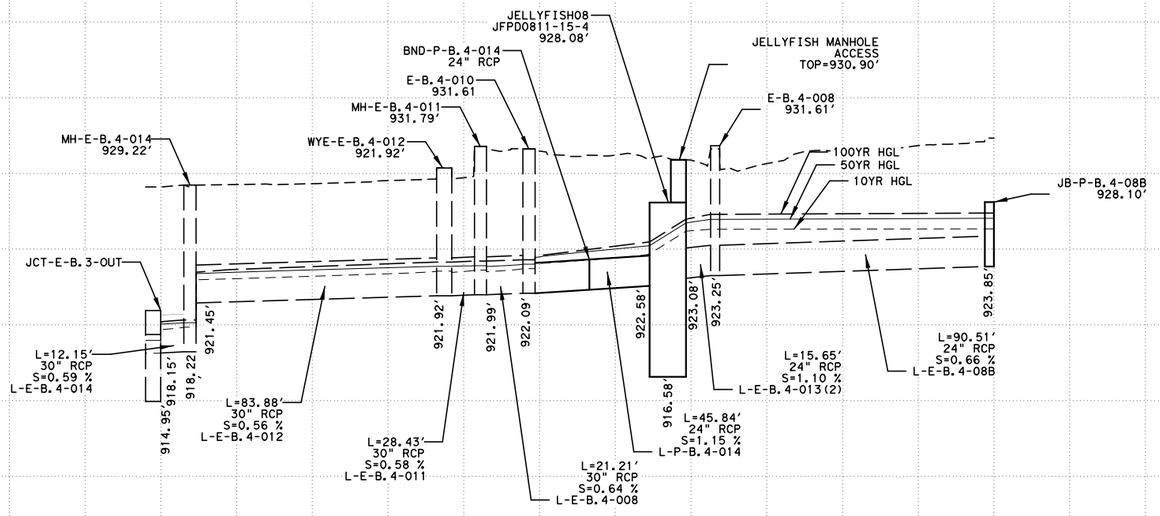

SECTION A-A

02 ENTIRE SHEET

HORIZONTAL SCALE
0' 25' 50'
0' 5' 10'
VERTICAL SCALE

NOTES:
1. ELEVATIONS SHOW HEREON WERE DERIVED FROM AS-BUILT PLANS PROVIDED TO PARSONS.

2. CONTRACTOR SHALL FIELD VERIFY INVERT ELEVATIONS WITHIN THE EXISTING VAULT, SPLITTER BOX OPENINGS, AND UPSTREAM AND DOWNSTREAM CONNECTIONS TO EXISTING CULVERTS AND/OR STORM SEWERS PRIOR TO THE START OF WORK; CONTRACTOR SHALL BE RESPONSIBLE FOR REPORTING ANY DISCREPANCIES BETWEEN FIELD SURVEYED ELEVATIONS AND THE ELEVATIONS SHOWN ON THESE PLANS IMMEDIATELY TO THE PROJECT ENGINEER PRIOR TO THE START OF WORK.

LEGEND

- EXIST RIGHT-OF-WAY
- EXIST STORM SEWER
- PROP STORM SEWER
- EXIST CONTOURS
- PROP CONTOURS
- 10" FLEX BASE PROP PAVING
- PROP CONCRETE
- PROP PAVEMENT

RELEASED FOR CONSTRUCTION 2024.01.25 14:41:23 -06'00'

STATE OF TEXAS
JEREMY HUTCHINS
134720
LICENSED PROFESSIONAL ENGINEER

2024.01.25 14:39:49 -06'00'

ISSUE RECORD

NO.	DESCRIPTION	DATE
00	RFC DESIGN	29MAR23
01	NDC 0082	30JUN23
02	NDC 0133	20DEC23

CENTRAL TEXAS REGIONAL MOBILITY AUTHORITY

GREAT HILLS CONSTRUCTORS

PARSONS
TBPE Registration No. F-1481

183 NORTH MOBILITY
SEGMENT 1A
BASIN LAYOUT
HYMEADOW WATER QUALITY BASIN 2B (BASIN B)

DESIGNED	FED. RD. DIV. NO.		FEDERAL AID PROJECT NO.	HIGHWAY NO.
KR	6			US 183
DRAWN	STATE	DISTRICT	COUNTY	DRAWING
RG	TEXAS	AUSTIN	TRAVIS, WILLIAMSON	1ADRVLT2B
CHECKED	CONTROL	SECTION	JOB	SHEET NO.
MM	0151	06	143	1AWQ012
APPROVED				
SB				

User: p003330E Date: 1/25/2024 Time: 2:34:24 PM Pen Table: 183N_Standard.tbl Plot Config: 183N PDF.pltcfg
File Name: 1ADRVLT2B.dgn

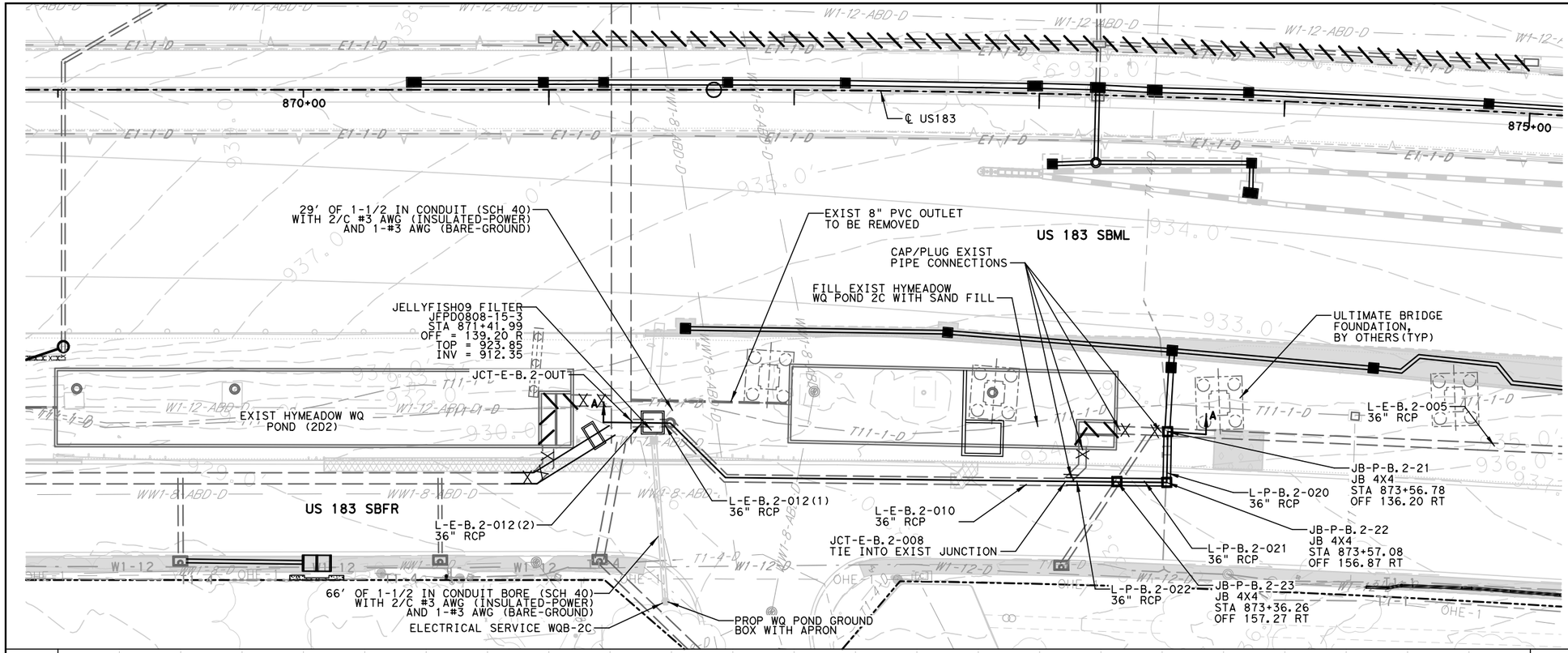

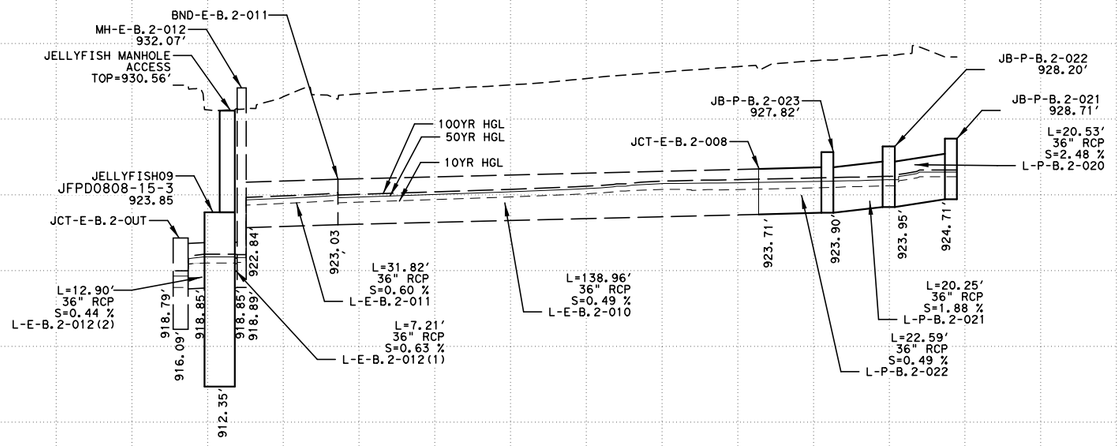

SECTION A-A

02 ENTIRE SHEET

HORIZONTAL SCALE
0' 25' 50'
0' 5' 10'
VERTICAL SCALE

NOTES:
1. ELEVATIONS SHOW HEREON WERE DERIVED FROM AS-BUILT PLANS PROVIDED TO PARSONS.

2. CONTRACTOR SHALL FIELD VERIFY INVERT ELEVATIONS WITHIN THE EXISTING VAULT, SPLITTER BOX OPENINGS, AND UPSTREAM AND DOWNSTREAM CONNECTIONS TO EXISTING CULVERTS AND/OR SEWERS PRIOR TO THE START OF WORK; CONTRACTOR SHALL BE RESPONSIBLE FOR REPORTING ANY DISCREPANCIES BETWEEN FIELD SURVEYED ELEVATIONS AND THE ELEVATIONS SHOWN ON THESE PLANS IMMEDIATELY TO THE PROJECT ENGINEER PRIOR TO THE START OF WORK.

LEGEND

- EXIST RIGHT-OF-WAY
- EXIST STORM SEWER
- PROP STORM SEWER
- EXIST CONTOURS
- PROP CONTOURS
- 10" FLEX BASE PROP PAVING
- PROP CONCRETE
- PROP PAVEMENT

RELEASED FOR CONSTRUCTION 2024.01.25 14:41:24 -06'00'

STATE OF TEXAS
JEREMY HUTCHINS
134720
LICENSED PROFESSIONAL ENGINEER

2024.01.25 14:39:50 -06'00'

ISSUE RECORD

NO.	DESCRIPTION	DATE
00	RFC DESIGN	29MAR23
01	NDC 0082	30JUN23
02	NDC 0133	20DEC23

CENTRAL TEXAS REGIONAL MOBILITY AUTHORITY

GREAT HILLS CONSTRUCTORS

PARSONS
TBPE Registration No. F-1481

183 NORTH MOBILITY
SEGMENT 1A
BASIN LAYOUT
HYMEADOW WATER QUALITY BASIN 2C (BASIN B)

DESIGNED	FED. RD. DIV. NO.		FEDERAL AID PROJECT NO.	HIGHWAY NO.
KR	6			US 183
DRAWN	STATE	DISTRICT	COUNTY	DRAWING
RG	TEXAS	AUSTIN	TRAVIS, WILLIAMSON	1ADRVLT2C
CHECKED	CONTROL	SECTION	JOB	SHEET NO.
MM	0151	06	143	1AWQ013
APPROVED				
SB				

User: p003330E Date: 1/25/2024 Time: 2:34:37 PM Pen Table: 183N_Standard.tbl Plot Config: 183N PDF.pltcfg
File Name: 1ADRVLT2C.dgn

ELEVATION STORAGE TABLE			
ELEVATION	AREA (SQ FT)	AREA (AC)	VOLUME (AC FT)
917.24	10	0.000	0.000
918.00	1,358	0.031	0.009
918.50	2,108	0.048	0.029 *
919.00	2,858	0.066	0.056
920.00	4,219	0.097	0.137
921.00	4,568	0.105	0.238
921.20	4,579	0.105	0.259 **
922.00	4,626	0.106	0.343
923.00	4,678	0.107	0.450
924.00	4,730	0.109	0.558
925.00	4,782	0.110	0.667
926.00	4,834	0.111	0.777
927.00	5,172	0.119	0.892
928.00	5,224	0.120	1.012
929.00	5,276	0.121	1.132
930.00	5,328	0.122	1.254
931.00	5,380	0.124	1.377

* SEDIMENT STORAGE
** WQEL

POND POINTS TABLE				
POINT #	NORTHING	EASTING	TOW ELEV	FG RW/L
1	10140993.27	3097029.71	938.00	931.00
2	10140982.77	3097001.61	933.00	920.63
3	10140814.78	3097064.37	933.00	917.60
4	10140825.28	3097092.47	938.00	917.60

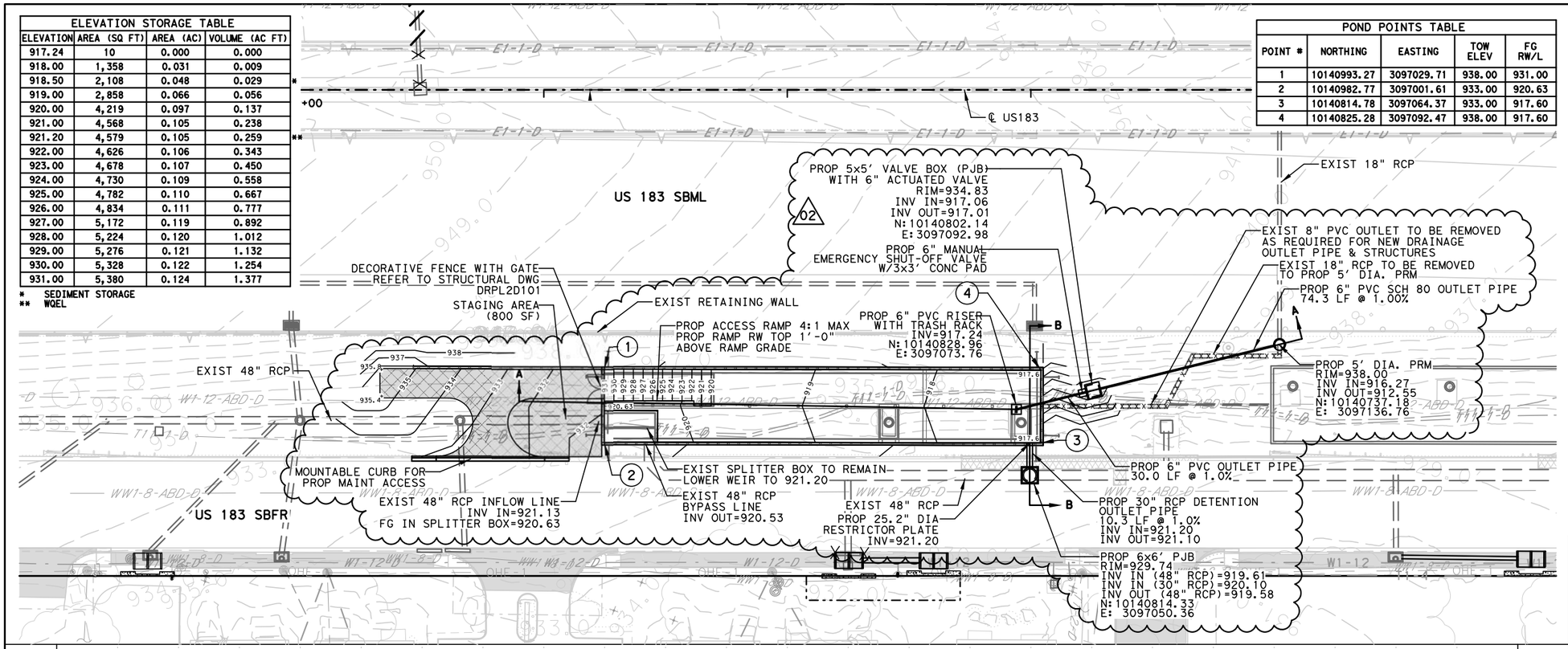

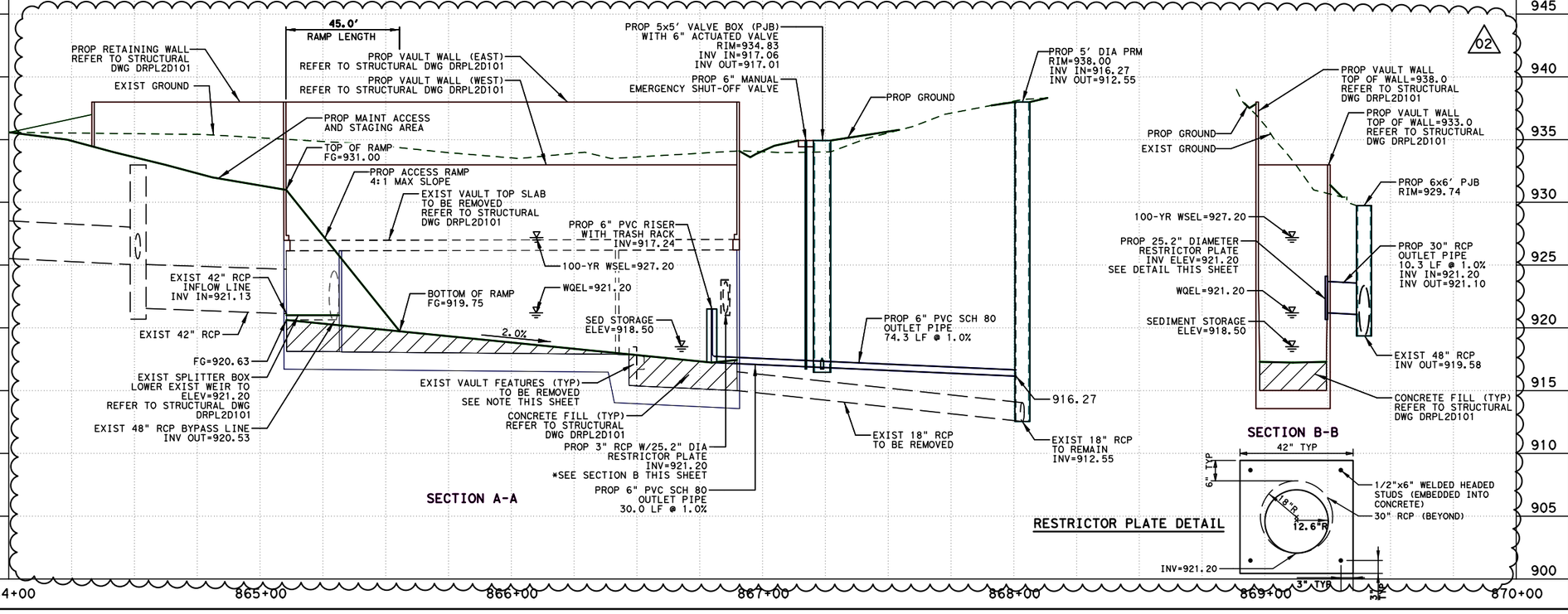

HORIZONTAL SCALE
0' 25' 50'
0' 5' 10'
VERTICAL SCALE

NOTES:
1. ELEVATIONS SHOW HEREON WERE DERIVED FROM AS-BUILT PLANS PROVIDED TO PARSONS.

2. CONTRACTOR SHALL FIELD VERIFY INVERT ELEVATIONS WITHIN THE EXISTING VAULT, SPLITTER BOX OPENINGS, AND UPSTREAM AND DOWNSTREAM CONNECTIONS TO EXISTING CULVERTS AND/OR SEWERS PRIOR TO THE START OF WORK; CONTRACTOR SHALL BE RESPONSIBLE FOR REPORTING ANY DISCREPANCIES BETWEEN FIELD SURVEYED ELEVATIONS AND THE ELEVATIONS SHOWN ON THESE PLANS IMMEDIATELY TO THE PROJECT ENGINEER PRIOR TO THE START OF WORK.

LEGEND
- EXIST RIGHT-OF-WAY
- EXIST STORM SEWER
- PROP STORM SEWER
- EXIST CONTOURS
- PROP CONTOURS
- 10" FLEX BASE PROP PAVING
- PROP CONCRETE
- PROP PAVEMENT

RELEASED FOR CONSTRUCTION Date: 2024.01.30 06:05:46 -06'00'

STATE OF TEXAS
PATRICK M. GIBBONS
113697
LICENSED PROFESSIONAL ENGINEER

Patrick M. Gibbons
Date: 2024.01.30 06:05:37 -06'00'

ISSUE RECORD		
NO.	DESCRIPTION	DATE
00	RFC DESIGN	29MAR23
01	NDC 0082	30JUN23
02	NDC 0133	20DEC23

CENTRAL TEXAS REGIONAL MOBILITY AUTHORITY

GREAT HILLS CONSTRUCTORS

PARSONS
TBPE Registration No. F-1481

183 NORTH MOBILITY
SEGMENT 1A
POND LAYOUT
HYMEADOW POND 2D1 (BASIN B)

DESIGNED	FED. RD. DIV. NO.		FEDERAL AID PROJECT NO.	HIGHWAY NO.
KR	6			US 183
DRAWN	STATE	DISTRICT	COUNTY	DRAWING
RG	TEXAS	AUSTIN	TRAVIS, WILLIAMSON	1ADRVLT2D1
CHECKED	CONTROL	SECTION	JOB	SHEET NO.
MM	0151	06	143	1AWQ014
APPROVED				
SB				

User: p007012D Date: 1/29/2024 Time: 6:27:43 PM Pen Table: 183N_Standard.tbl Plot Config: 183N PDF.pltcfg
File Name: 1A-DRVLT-2D1.dgn

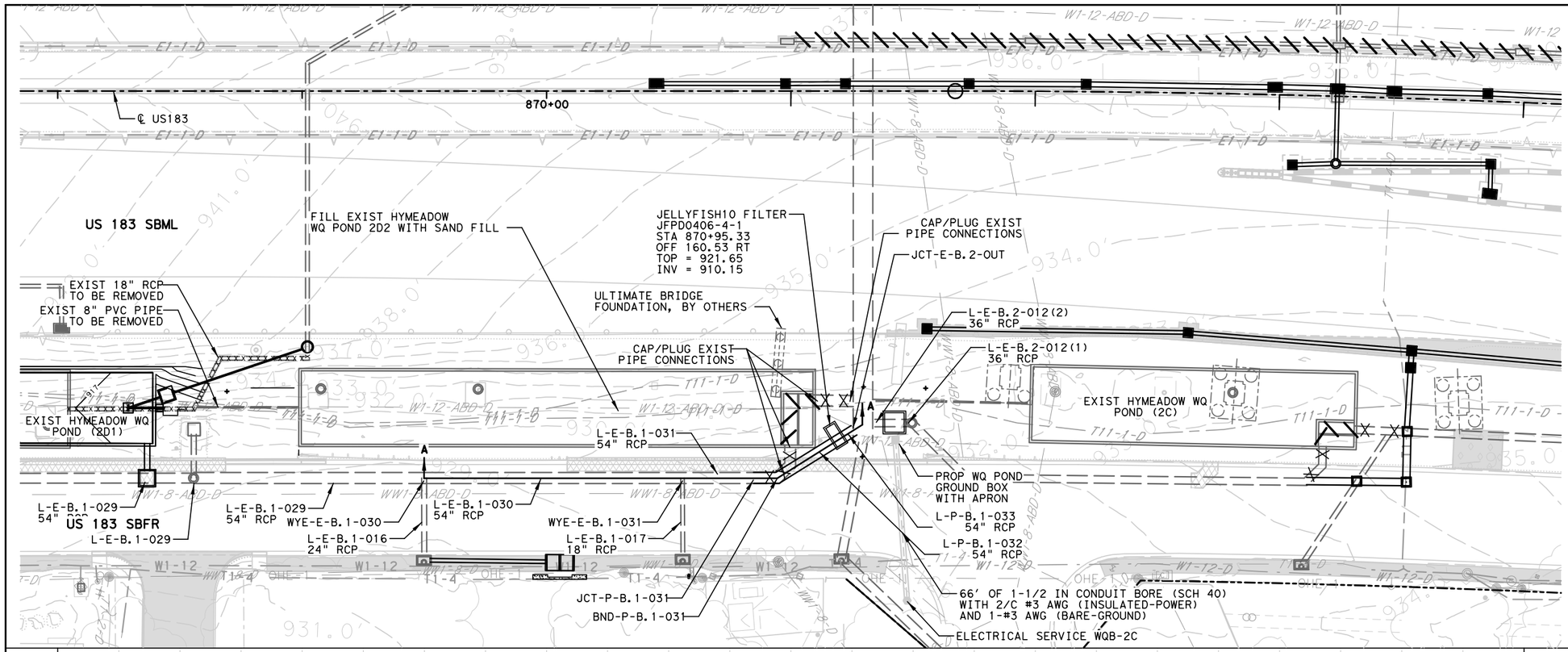

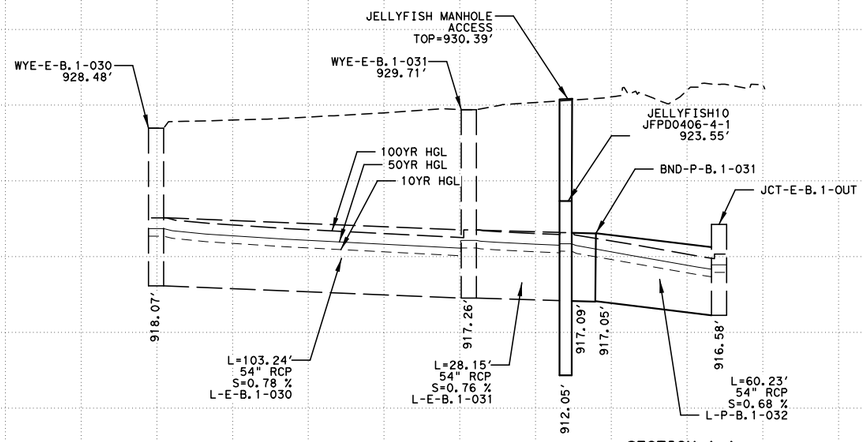

SECTION A-A

02 ENTIRE SHEET

HORIZONTAL SCALE
0' 25' 50'
VERTICAL SCALE
0' 5' 10'

NOTES:
1. ELEVATIONS SHOW HEREON WERE DERIVED FROM AS-BUILT PLANS PROVIDED TO PARSONS.

2. CONTRACTOR SHALL FIELD VERIFY INVERT ELEVATIONS WITHIN THE EXISTING VAULT, SPLITTER BOX OPENINGS, AND UPSTREAM AND DOWNSTREAM CONNECTIONS TO EXISTING CULVERTS AND/OR SEWERS PRIOR TO THE START OF WORK; CONTRACTOR SHALL BE RESPONSIBLE FOR REPORTING ANY DISCREPANCIES BETWEEN FIELD SURVEYED ELEVATIONS AND THE ELEVATIONS SHOWN ON THESE PLANS IMMEDIATELY TO THE PROJECT ENGINEER PRIOR TO THE START OF WORK.

LEGEND

- EXIST RIGHT-OF-WAY
- EXIST STORM SEWER
- PROP STORM SEWER
- EXIST CONTOURS
- PROP CONTOURS
- 10" FLEX BASE PROP PAVING
- PROP CONCRETE
- PROP PAVEMENT

RELEASED FOR CONSTRUCTION 2024.01.25 14:41:27 -06'00'

STATE OF TEXAS
JEREMY HUTCHINS
134720
LICENSED PROFESSIONAL ENGINEER

2024.01.25 14:39:52 -06'00'

ISSUE RECORD

NO.	DESCRIPTION	DATE
00	RFC DESIGN	29MAR23
01	NDC 0082	30JUN23
02	NDC 0133	20DEC23

CENTRAL TEXAS REGIONAL MOBILITY AUTHORITY

GREAT HILLS CONSTRUCTORS

PARSONS
TBPE Registration No. F-1481

183 NORTH MOBILITY
SEGMENT 1A
BASIN LAYOUT
HYMEADOW WATER QUALITY BASIN 2D2 (BASIN B)

DESIGNED	FED. RD. DIV. NO.		FEDERAL AID PROJECT NO.	HIGHWAY NO.
KR	6			US 183
DRAWN	STATE	DISTRICT	COUNTY	DRAWING
RG	TEXAS	AUSTIN	TRAVIS, WILLIAMSON	1ADRVLT2D2
CHECKED	CONTROL	SECTION	JOB	SHEET NO.
MM	0151	06	875+06	1AWQ015
APPROVED			143	
SB				

User: p003330E Date: 1/25/2024 Time: 2:35:06 PM Pen Table: 183N_Standard.tbl Plot Config: 183N PDF.pltcfg
File Name: 1ADRVLT2D2.dgn

POINTS TABLE			
POINT #	NORTHING	EASTING	ELEV
1	10139095.76	3098018.77	912.00
2	10139060.46	3097990.09	912.00
3	10139074.96	3097976.54	911.85
4	10139079.31	3097965.36	912.00
5	10139141.53	3097925.71	913.00
6	10139204.31	3097912.03	914.00
7	10139223.82	3097938.92	914.00
8	10139187.90	3097980.52	913.00
9	10139128.14	3097976.68	912.00
10	10139132.05	3098039.04	912.00
11	10139153.13	3098067.98	920.50
12	10139018.47	3097958.98	922.30
13	10139037.43	3097914.38	923.20
14	10139254.02	3097869.19	925.00
15	10139273.12	3097916.06	924.22
16	10139274.20	3097925.85	924.18

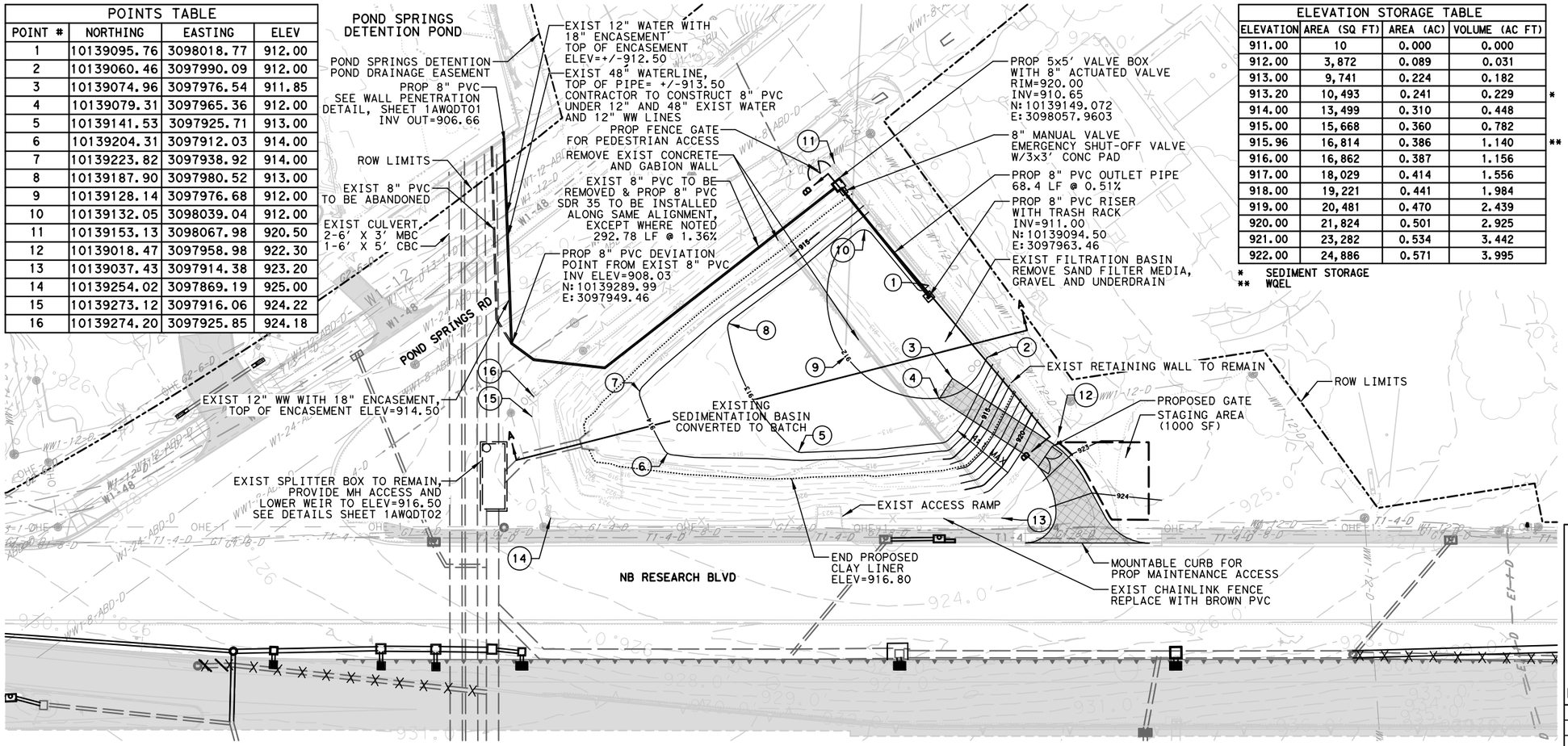

ELEVATION STORAGE TABLE				
ELEVATION	AREA (SQ FT)	AREA (AC)	VOLUME (AC FT)	
911.00	10	0.000	0.000	
912.00	3,872	0.089	0.031	
913.00	9,741	0.224	0.182	
913.20	10,493	0.241	0.229	*
914.00	13,499	0.310	0.448	
915.00	15,668	0.360	0.782	
915.96	16,814	0.386	1.140	**
916.00	16,862	0.387	1.156	
917.00	18,029	0.414	1.556	
918.00	19,221	0.441	1.984	
919.00	20,481	0.470	2.439	
920.00	21,824	0.501	2.925	
921.00	23,282	0.534	3.442	
922.00	24,886	0.571	3.995	

* SEDIMENT STORAGE
** WQEL

HORIZONTAL SCALE 0' 30' 60'
VERTICAL SCALE 0' 6' 12'

NOTES
1. ESTIMATED WATER QUALITY VOLUME PROVIDED IS 59,685 CF.
2. ALL DISTURBED AREAS THAT ARE NOT PAVED OR RIPRAPPED SHALL BE SEEDED. SEE SHEET 1ALAQS02 FOR SEED MIX AND SEEDING REQUIREMENTS.

LEGEND
- EXIST RIGHT-OF-WAY
- EXIST STORM SEWER
- PROP STORM SEWER
- EXIST CONTOURS
- PROP CONTOURS
- 10" FLEX BASE PROP PAVING
- PROP CONCRETE
- PROP PAVEMENT

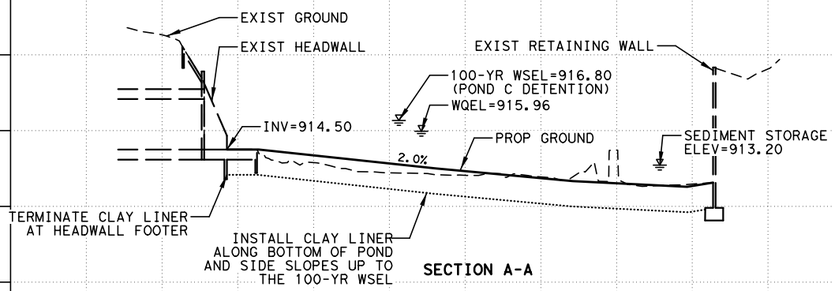

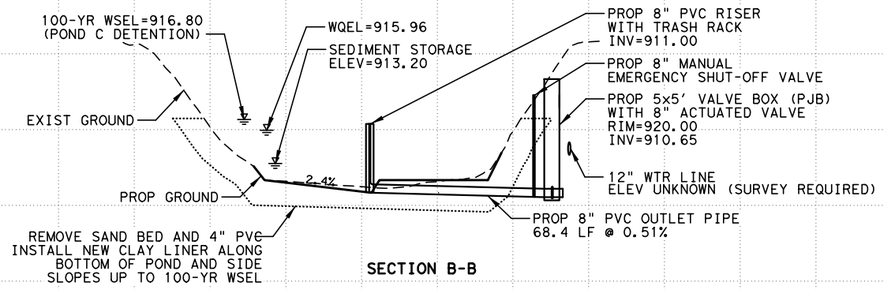

RELEASED FOR CONSTRUCTION Date: 2023.05.26 14:52:34 -05'00'

STATE OF TEXAS
PATRICK M. GIBBONS
113697
LICENSED PROFESSIONAL ENGINEER
Patrick M. Gibbons
Date: 2023.05.26 14:51:52 -05'00'

ISSUE RECORD		
NO.	DESCRIPTION	DATE
00	RFC DESIGN	29MAR23

CENTRAL TEXAS REGIONAL MOBILITY AUTHORITY

GREAT HILLS CONSTRUCTORS

PARSONS
TBPE Registration No. F-1481

183 NORTH MOBILITY
SEGMENT 1A
POND LAYOUT
POND SPRINGS (BASIN C)
US 183 STA 885+00 (RT)

DESIGNED	FED. RD. DIV. NO.		FEDERAL AID PROJECT NO.	HIGHWAY NO.
DF	6			US 183
DRAWN	STATE	DISTRICT	COUNTY	DRAWING
RG	TEXAS	AUSTIN	TRAVIS, WILLIAMSON	1ADRPONC
CHECKED	CONTROL	SECTION	JOB	SHEET NO.
MM	0151	06	143	1AWQ016
APPROVED				
SB				

User: p001433F Date: 5/25/2023 Time: 6:11:46 PM Pen Table: 183N_Standard.tbl Plot Config: 183N PDF.pltcfg
File Name: 1A-DRPON-C.dgn

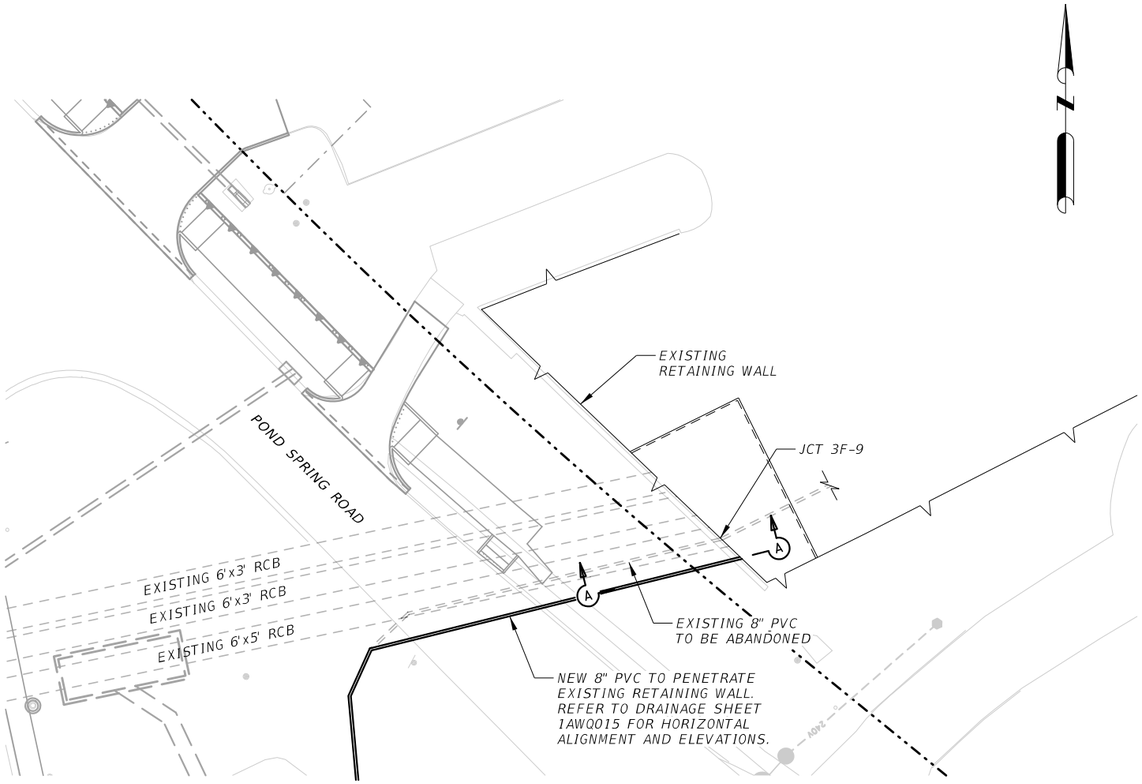

OUTFALL PLAN
SCALE: 1" = 40'-0"

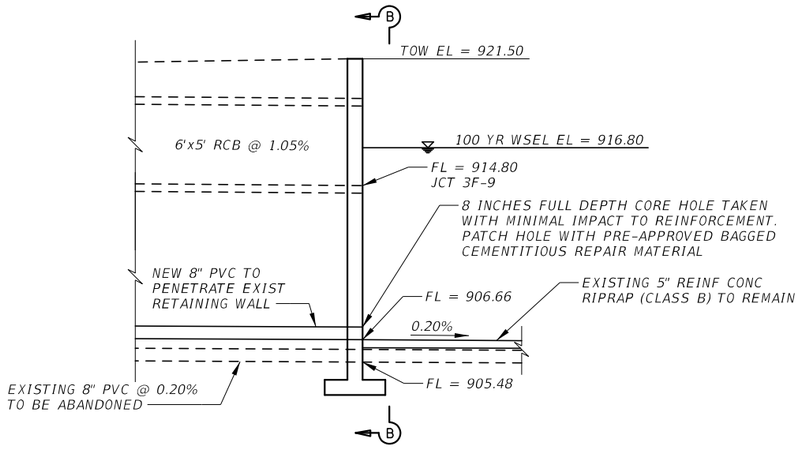

SECTION A-A
SCALE: NTS

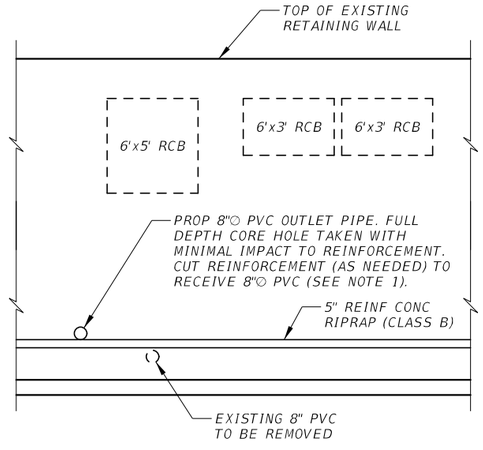

SECTION B-B
SCALE: NTS

NOTES:

1. STRUCTURAL MEMBERS IDENTIFIED HERE ARE FROM AS-BUILT DRAWINGS.

RELEASED FOR CONSTRUCTION 2023.05.15 16:22:18 -05'00'

STATE OF TEXAS
HUGO A. ALVAREZ-SOLIS
92085
PROFESSIONAL ENGINEER

2023.05.15 16:21:56 -05'00'

ISSUE RECORD

NO.	DESCRIPTION	DATE
00	RFC SUBMITTAL	29MAR23

CENTRAL TEXAS REGIONAL MOBILITY AUTHORITY

GREAT HILLS CONSTRUCTORS

PARSONS
TBPE Registration No. F-1481

183 NORTH MOBILITY
SEGMENT 1A
POND SPRINGS (BASIN C)
DETENTION POND DETAILS

DESIGNED	FED. RD. DIV. NO.		FEDERAL AID PROJECT NO.	HIGHWAY NO.
HA	6			US 183
DRAWN	STATE	DISTRICT	COUNTY	DRAWING
SS	TEXAS	AUSTIN	TRAVIS, WILLIAMSON	1AWQDT01
CHECKED	CONTROL	SECTION	JOB	SHEET NO.
JA	0151	06	143	1AWQ017
APPROVED				
WD				

User: p0046757 Date: 5/15/2023 Time: 11:50:55 AM Pen Table: 183N_Standard.tbl Plot Config: 183N PDF.pltcfg
File Name: 1A-WQDT-01.dgn

NOTES:

1. PROVIDE CLASS C CONCRETE (f'c = 3,600 psi).
2. PROVIDE GRADE 60 REINFORCING STEEL
3. ALL REINFORCEMENT SHALL BE EPOXY COATED.
4. * DENOTES 180 DEGREE HOOK AT EACH END, SEE SECTIONS B-B & C-C.
5. EXISTING STRUCTURAL MEMBERS IDENTIFIED HERE ARE FROM AS-BUILT DRAWINGS.
6. CONTRACTOR TO FIELD VERIFY EXISTING STRUCTURE ELEVATIONS AND THE EXISTING SPLITTER BOX TOP SLAB DIMENSIONS PRIOR TO START OF FABRICATION FOR PROPOSED MANHOLE ACCESS.
7. CONCRETE REMOVAL SHALL FOLLOW TXDOT ITEM 104 AND ITEM 496. ANY DAMAGED CONCRETE SHALL BE REPAIRED IN ACCORDANCE TO THE TXDOT CONCRETE REPAIR MANUAL. SAWCUT 1" DEEP AT BREAKBACK LINE.

(1) IN LIEU OF POST INSTALLED DOWELS, EXISTING REINFORCEMENT MAY REMAIN. BARS SHALL BE CUT TO MATCH DOWEL LENGTH SPECIFIED ON ELEVATION VIEW AND LAPPED WITH NEW REINFORCEMENT.

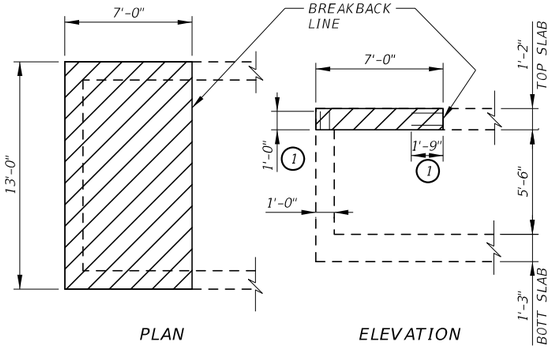

CONCRETE REMOVAL OF TOP SLAB
SCALE: NOT TO SCALE

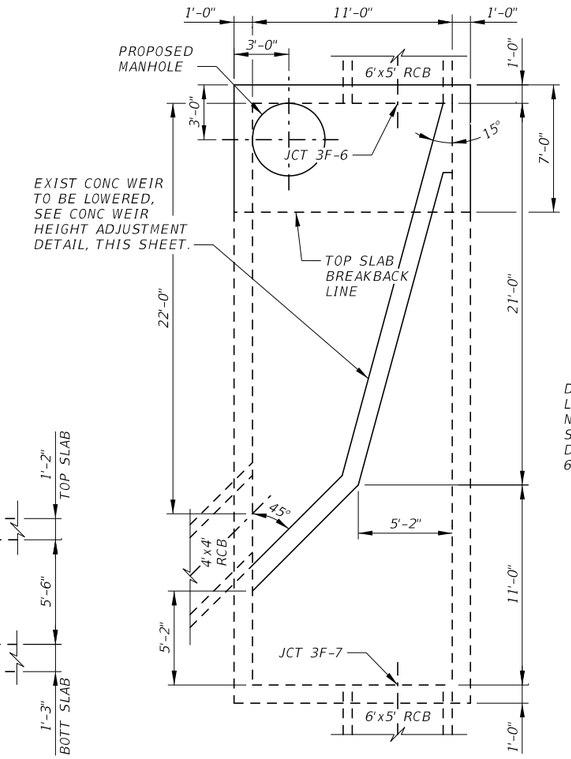

EXIST SPLITTER BOX PLAN
SCALE: NOT TO SCALE

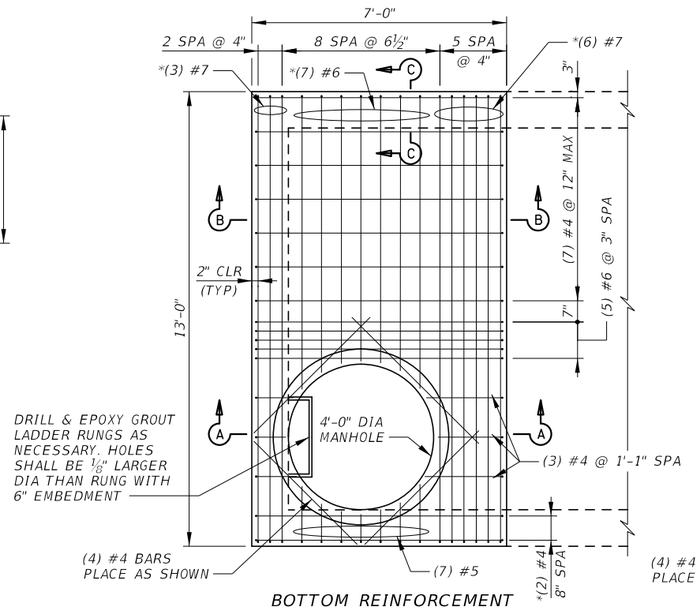

TOP SLAB REINFORCEMENT
SCALE: NOT TO SCALE

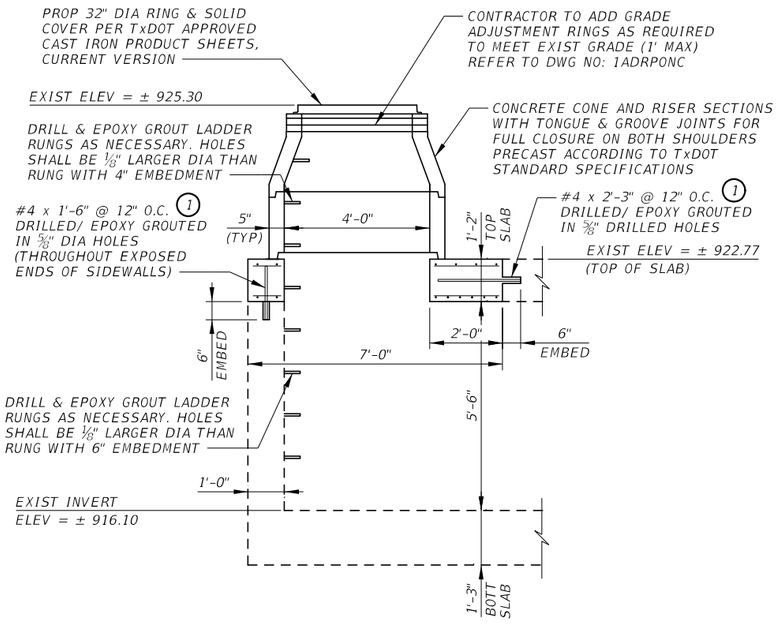

SECTION A-A
SCALE: NOT TO SCALE

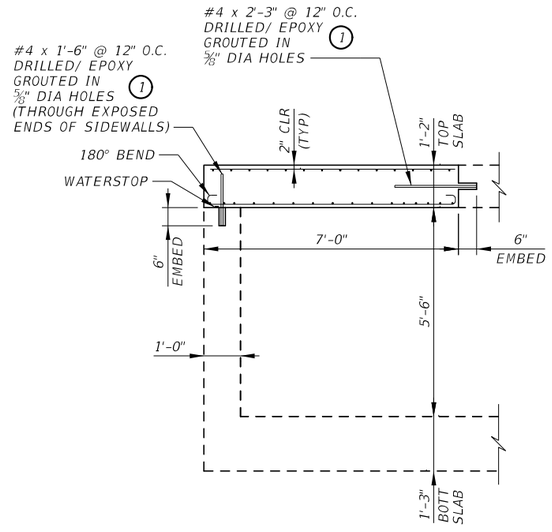

SECTION B-B
SCALE: NOT TO SCALE

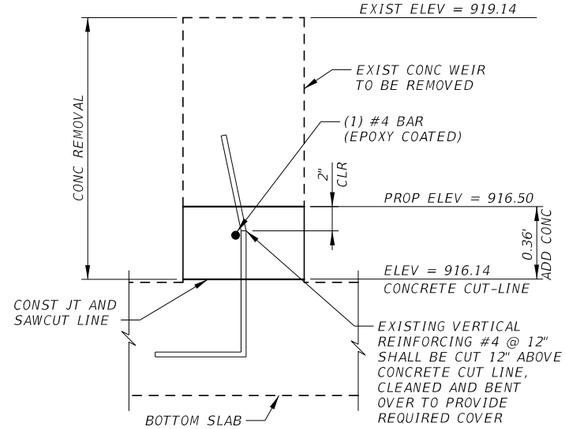

CONCRETE WEIR HEIGHT ADJUSTMENT
SCALE: NOT TO SCALE

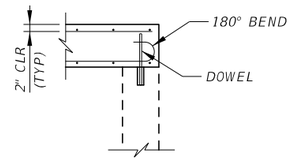

SECTION C-C
SCALE: NOT TO SCALE

RELEASED FOR CONSTRUCTION 2023.05.15 16:22:19 -05:00'

STATE OF TEXAS
HUGO A. ALVAREZ-SOLIS
92085
PROFESSIONAL ENGINEER

2023.05.15 16:21:57 -05:00'

ISSUE RECORD

NO.	DESCRIPTION	DATE
00	RFC SUBMITTAL	29MAR23

CENTRAL TEXAS REGIONAL MOBILITY AUTHORITY

GREAT HILLS CONSTRUCTORS

PARSONS
TBPE Registration No. F-1481

183 NORTH MOBILITY
SEGMENT 1A
POND SPRINGS (BASIN C)
SPLITTER BOX
STRUCTURE DETAILS

DESIGNED	FED. RD. DIV. NO.	FEDERAL AID PROJECT NO.	HIGHWAY NO.
HA	6		US 183
DRAWN SS	STATE / DISTRICT	COUNTY	DRAWING
CHECKED JA	TEXAS / AUSTIN	TRAVIS, WILLIAMSON	1AWQDT02
APPROVED WD	CONTROL / SECTION	JOB	SHEET NO.
	0151 / 06	143	1AWQ018

User: p0046757 Date: 5/15/2023 Time: 12:04:14 PM Pen Table: 183N_Standard.tbl Plot Config: 183N PDF.pltcfg
File Name: 1A-WQDT-02.dgn

POINTS TABLE			
POINT #	NORTHING	EASTING	ELEV
1	10135482.56	3101852.52	918.00
2	10135527.06	3101869.72	918.00
3	10135541.37	3101917.77	917.00
4	10135557.22	3101965.68	916.00
5	10135618.53	3102207.83	908.00
6	10135632.19	3102208.67	908.00
7	10135635.94	3102223.20	908.00
8	10135633.00	3102241.88	908.00
9	10135617.05	3102258.64	908.00
10	10135602.39	3102247.52	908.00
11	10135586.71	3102298.34	909.00
12	10135535.03	3102261.86	909.00
13	10135505.21	3102224.22	909.00
14	10135548.74	3102119.20	909.00
15	10135600.50	3102121.92	909.00
16	10135420.01	3102174.95	910.00
17	10135469.59	3102048.48	910.00

POINTS TABLE			
POINT #	NORTHING	EASTING	ELEV
18	10135540.16	3102051.15	910.00
19	10135597.64	3102102.10	910.00
20	10135387.09	3102172.94	911.00
21	10135372.01	3102139.83	911.00
22	10135415.07	3102035.67	911.00
23	10135428.70	3102025.72	911.00
24	10135311.19	3102195.29	916.00
25	10135280.09	3102203.02	917.00
26	10135261.24	3102210.19	917.00
27	10135154.14	3101972.15	918.00
28	10135254.85	3101938.41	916.00
29	10135389.33	3101989.33	912.50
30	10135355.03	3102015.12	912.50
31	10135316.77	3102009.18	913.00
32	10135310.94	3101939.93	913.00
33	10135355.00	3101922.43	913.00
34	10135380.44	3101941.76	913.00

ELEVATION STORAGE TABLE				
	ELEVATION	AREA (SQFT)	AREA (AC)	VOLUME (ACFT)
	907.64	10	0.000	0.000
	908.00	1,140	0.026	0.003
	909.00	16,565	0.380	0.172
*	909.17	19,753	0.453	0.243
	910.00	35,316	0.811	0.754
	911.00	47,372	1.088	1.700
**	911.58	51,139	1.174	2.356
	912.00	53,867	1.237	2.861
	913.00	66,564	1.528	4.241
	914.00	73,693	1.692	5.850
	915.00	81,428	1.869	7.630
***	915.16	87,088	1.999	7.940
	916.00	113,396	2.603	9.856
	917.00	137,905	3.166	12.736
	918.00	162,370	3.728	16.179
	919.00	171,979	3.948	20.016
	920.00	178,479	4.097	24.039
	921.00	184,932	4.245	28.210
	922.00	191,562	4.398	32.531
	923.00	199,460	4.579	37.019
	924.00	207,208	4.757	41.687

* SEDIMENT STORAGE
** WQEL
*** NORMAL WATER LEVEL

FENCE POINTS TABLE		
POINT #	NORTHING	EASTING
35	10135543.10	3102447.79
36	10135296.41	3102246.79
37	10135222.43	3102240.75
38	10135197.55	3102226.86
39	10135093.51	3101976.77
40	10135100.36	3101963.99
41	10135328.84	3101866.40
42	10135539.50	3101805.47
43	10135708.23	3102234.42
44	10135553.01	3102434.29

EXISTING FENCE TO BE REPLACED WITH BROWN PVC CHAINLINK FENCE
COUNTY ROAD 186A
EXIST 9x6' RBC AND HEADWALL TO REMAIN INV OUT=918.25
EXIST 42" RCP AND HEADWALL TO REMAIN INV OUT=917.85
EXIST DITCH TO REMAIN
SEDIMENT FOREBAY
NORMAL WATER LEVEL ELEV=915.16
PERMANENT POOL
PROP HEADWALL N=10135634.47 E=3102232.54 INV IN=910.00
STAGING AREA (800 SQFT)
PROP FENCE GATE
PROP CONC JCT BOX RIM=924.00 N=10135704.18 E=3102243.89
EXIST (3) 9x7' RBC INV IN=914.82 INV OUT=914.30
EXIST OUTLET STRUCTURE TO REMAIN
REMOVE JUNCTION BOX
PROP (2) 4x2' CULVERT AND HEADWALL SEE DETAILS SHEET 1AWQDT03
EXIST 6x5' CULVERT AND HEADWALL TO REMAIN
EXIST HEADWALL AND (2) 4x2' CULVERT TO BE REMOVED
EXIST SPILLWAY TO BE REMOVED PROP SPILLWAY INV ELEV=923.0 SEE DETAIL SHEET 1AWQ017
EXIST 8x4' CULVERT TO REMAIN
EXIST MAINT RAMP
POND SPRINGS ROAD
TURTLE ROCK ROAD
EXIST CONC DITCH TO REMAIN
END PROPOSED CLAY LINER AT ELEV: 922.80
PROP 12" PVC PIPE WITH PLUG VALVE 41.0 LF @ 1.0% INV IN=912.50 INV OUT=912.09
NORMAL WATER LEVEL ELEV=915.16
EXIST MAINT RAMP
ROW LIMITS
EXIST DITCH TO REMAIN
EXIST CONC DITCH TO REMAIN
END OF EXIST DITCH BEGIN EXIST CULVERT
EXIST LOW AREA AND INLET TO REMAIN
MAINTAIN EXIST ACCESS ROAD
PROP FENCE GATE
EXIST LOW AREA AND INLET TO REMAIN
REPAVE DISTURBED AREA DUE TO REGRADING

HORIZONTAL SCALE
0' 50' 100'

NOTES
1. WET POND CONTRIBUTES TO OUTFALL D IN THE LAKE CREEK TRIB 3 WATERSHED.
2. PROPERTY IS OWNED BY TXDOT.
3. ALL ACCESS RAMPS SHALL MEET TCEQ REQUIREMENTS. RAMPS ARE A MIN. 12-FT WIDE WITH A MAXIMUM 4:1 SLOPE.
4. WATER QUALITY VOLUME PROVIDED IS 102,627 CF (2.356 AC-FT).
5. DETENTION VOLUME PROVIDED ABOVE NORMAL WATER LEVEL IS 1,470,019 CF (33.747 AC-FT).
6. WET POND VEGETATION PROVIDED ACCORDING TO TCEQ REQUIREMENTS, REFER TO LANDSCAPE PLAN SHEET NO. 1ALP001.

LEGEND
- EXIST RIGHT-OF-WAY
- EXIST STORM SEWER
- PROP STORM SEWER
- EXIST CONTOURS
- PROP CONTOURS
- 10" FLEX BASE PROP PAVING
- PROP CONCRETE
- PROP PAVEMENT

RELEASED FOR CONSTRUCTION Date: 2023.05.26 14:57:51 -05'00'

STATE OF TEXAS
PATRICK M. GIBBONS
113697
LICENSED PROFESSIONAL ENGINEER

Patrick M. Gibbons
Date: 2023.05.26 14:54:39 -05'00'

ISSUE RECORD		
NO.	DESCRIPTION	DATE
00	RFC DESIGN	29MAR23

CENTRAL TEXAS REGIONAL MOBILITY AUTHORITY

GREAT HILLS CONSTRUCTORS

PARSONS
TBPE Registration No. F-1481

183 NORTH MOBILITY
SEGMENT 1A
POND LAYOUT
WOODS POND (BASIN D)
US183 STA 950+00 (LT)

DESIGNED	FED. RD. DIV. NO.	FEDERAL AID PROJECT NO.	HIGHWAY NO.
DF	6		US 183
DRAWN	STATE	DISTRICT	COUNTY	DRAWING
RG	TEXAS	AUSTIN	TRAVIS, WILLIAMSON	1ADRPONDPL
CHECKED	CONTROL	SECTION	JOB	SHEET NO.
MM	0151	06	143	1AWQ019
APPROVED				
SB				

User: p001433F Date: 5/25/2023 Time: 6:12:44 PM Pen Table: 183N_Standard.tbl Plot Config: 183N PDF.pltcfg
File Name: 1A-DRPON-D-PL.dgn

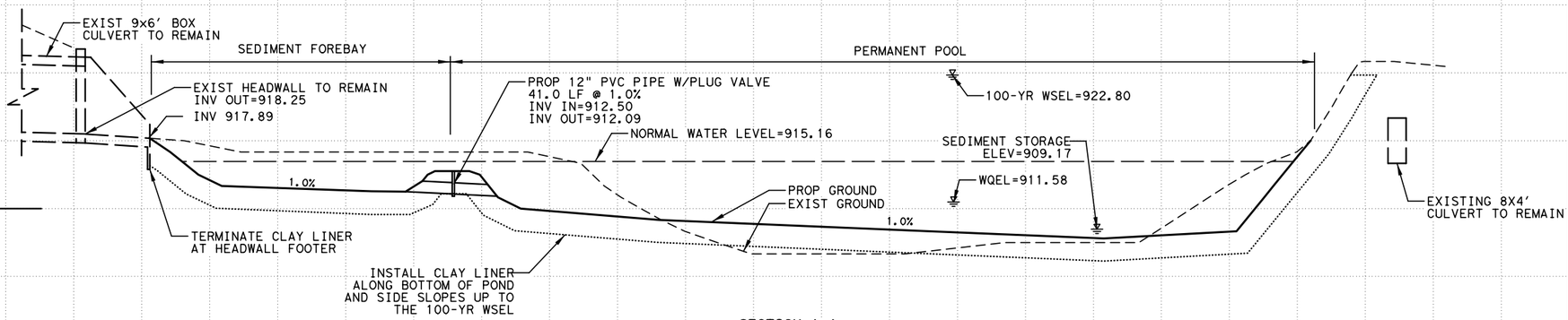

SECTION A-A

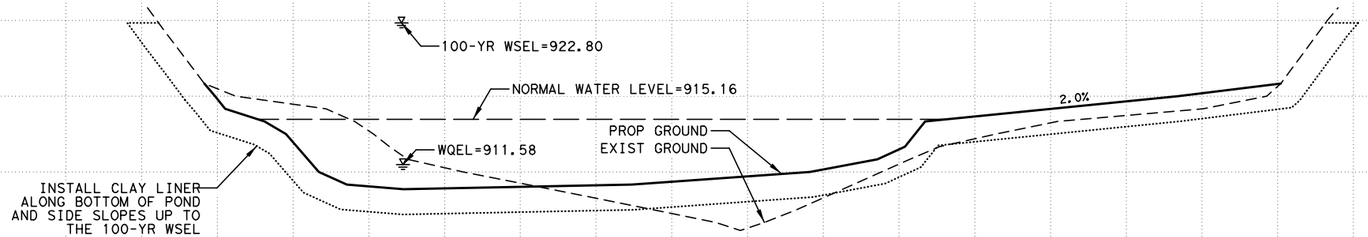

SECTION B-B

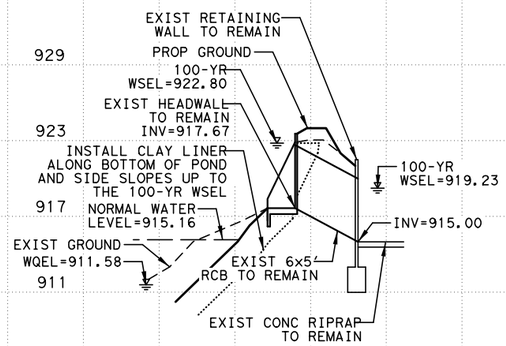

SECTION D-D

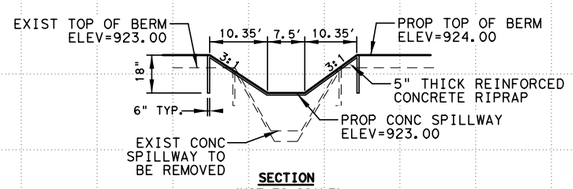

SECTION
(NOT TO SCALE)

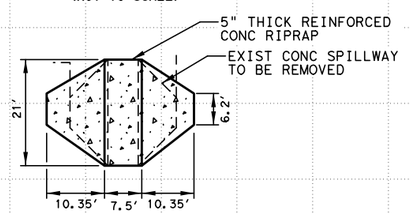

PLAN
(NOTE TO SCALE)

SECTION E-E

HORIZONTAL SCALE
0' 50' 100'
0' 6' 12'
VERTICAL SCALE

RELEASED FOR CONSTRUCTION Date: 2023.05.26 14:57:53 -05'00'

STATE OF TEXAS
PATRICK M. GIBBONS
113697
LICENSED PROFESSIONAL ENGINEER

Patrick M. Gibbons
Date: 2023.05.26 14:54:41 -05'00'

ISSUE RECORD

NO.	DESCRIPTION	DATE
00	RFC DESIGN	29MAR23

CENTRAL TEXAS REGIONAL MOBILITY AUTHORITY

GREAT HILLS CONSTRUCTORS

PARSONS
TBPE Registration No. F-1481

183 NORTH MOBILITY
SEGMENT 1A
POND SECTIONS
WOODS POND (BASIN D)
US183 STA 950+00 (LT)

DESIGNED	FED. RD. DIV. NO.		FEDERAL AID PROJECT NO.	HIGHWAY NO.
DF	6			US 183
DRAWN	STATE	DISTRICT	COUNTY	DRAWING
RG	TEXAS	AUSTIN	TRAVIS, WILLIAMSON	1ADRPONDPR
CHECKED	CONTROL	SECTION	JOB	SHEET NO.
MM	0151	06	143	1AWQ020
APPROVED				
SB				

User: p001433F Date: 5/25/2023 Time: 6:13:01 PM Pen Table: 183N_Standard.tbl Plot Config: 183N PDF.pltcfg
File Name: 1A-DRPON-D-PR.dgn

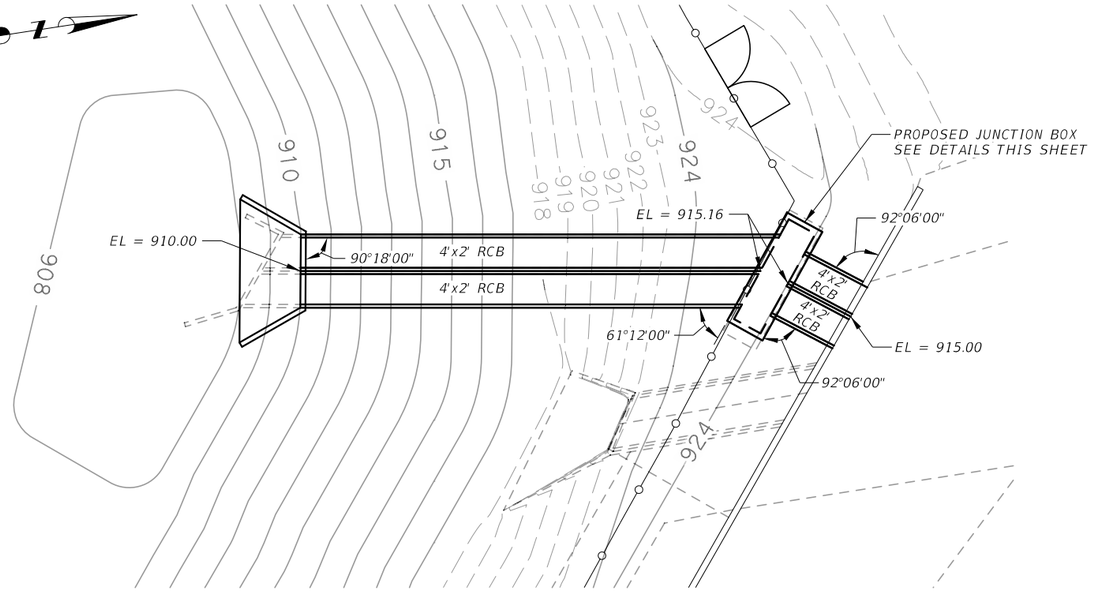

PLAN - DETENTION POND OUTLET

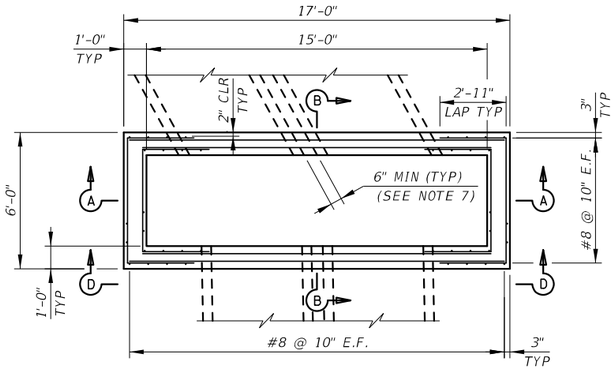

PLAN VIEW

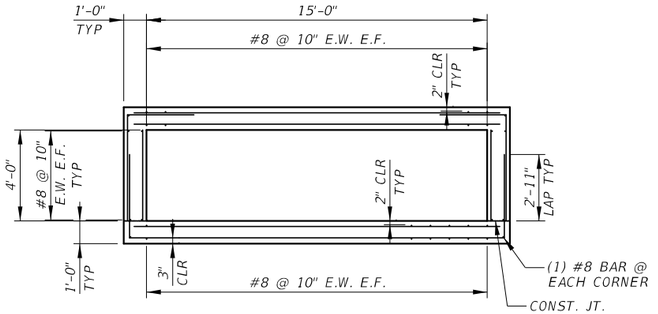

SECTION A-A

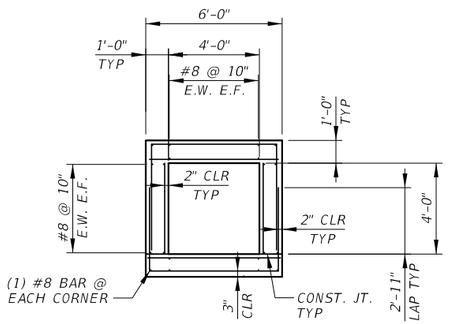

SECTION B-B

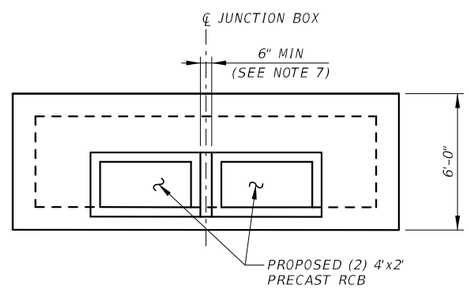

ELEVATION VIEW D-D

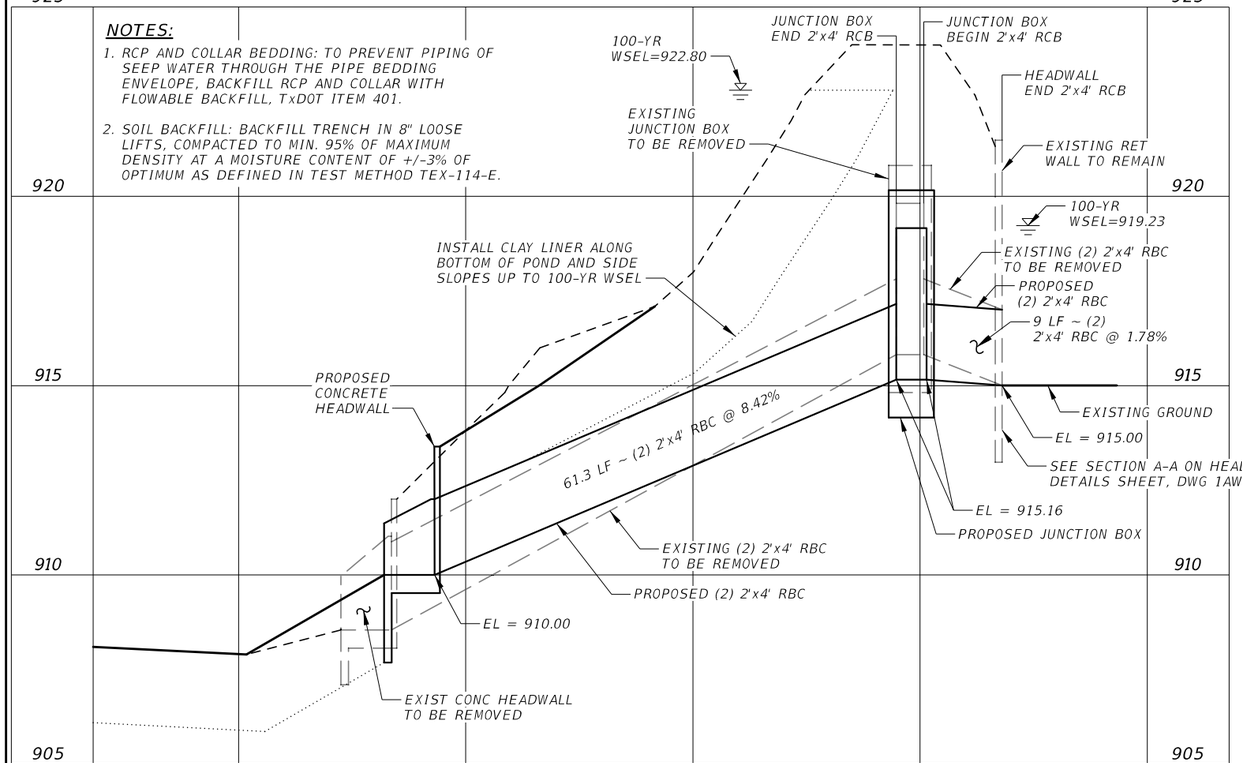

SECTION C-C

GENERAL NOTES:

1. DESIGNED ACCORDING TO AASHTO LRFD BRIDGE DESIGN. SPECIFICATIONS FOR THE RANGE OF FILL HEIGHTS SHOWN.
2. REINFORCING BAR DIMENSIONS SHOWN ARE OUT-TO-OUT OF BAR.
3. COVER DIMENSIONS ARE CLEAR DIMENSIONS, UNLESS OTHERWISE NOTED.
4. DO NOT USE PERMANENT FORMS.
5. PROVIDE GRADE 60 REINFORCING STEEL.
6. PROVIDE CLASS C CONCRETE (f"c = 3,600 psi)
7. SEE TXDOT STANDARD SHEET "BOX CULVERTS PRECAST MISCELLANEOUS DETAILS SCP-MD" FOR MULTIPLE RCB UNIT PLACEMENT.

RELEASED FOR CONSTRUCTION 2023.05.31 15:59:47 -05'00'

STATE OF TEXAS
HUGO A. ALVAREZ-SOLIS
92085
PROFESSIONAL ENGINEER

2023.05.31 15:59:33 -05'00'

ISSUE RECORD

NO.	DESCRIPTION	DATE
00	RFC SUBMITTAL	29MAR23

CENTRAL TEXAS REGIONAL MOBILITY AUTHORITY

GREAT HILLS CONSTRUCTORS

PARSONS
TBPE Registration No. F-1481

183 NORTH MOBILITY
SEGMENT 1A
WOODS POND (BASIN D)
JUNCTION BOX
STRUCTURAL DETAILS

DESIGNED	FED. RD. DIV. NO.		FEDERAL AID PROJECT NO.	HIGHWAY NO.
HA	6			US 183
DRAWN	STATE	DISTRICT	COUNTY	DRAWING
SS	TEXAS	AUSTIN	TRAVIS, WILLIAMSON	1AWQDT03
CHECKED	CONTROL	SECTION	JOB	SHEET NO.
JA	0151	06	143	1AWQ021
APPROVED				
WD				

User: p006583A Date: 5/31/2023 Time: 3:07:55 PM Pen Table: 183N_Standard.tbl Plot Config:
File Name: 1A-WQDT-03.dgn

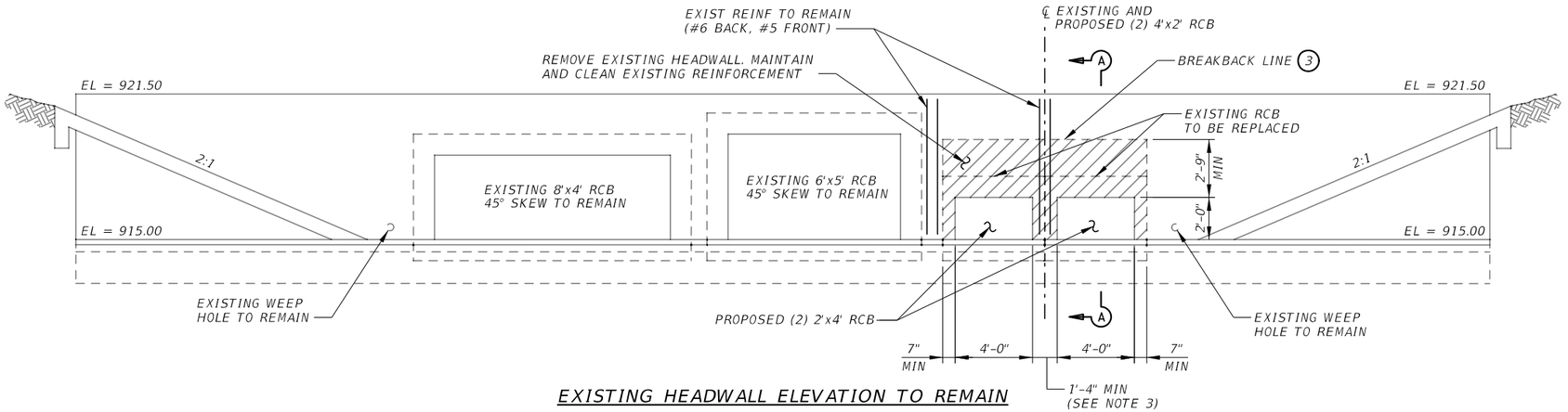

EXISTING HEADWALL ELEVATION TO REMAIN



BARS A

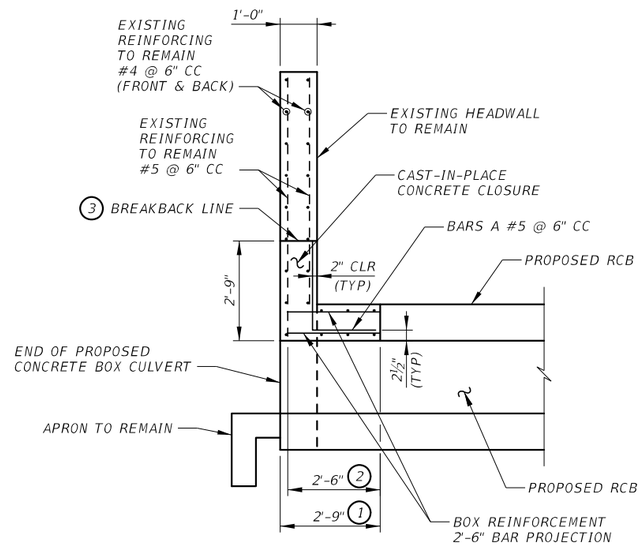

SECTION A-A

NOTES:

1. STRUCTURAL MEMBERS IDENTIFIED HERE ARE FROM AS-BUILT DRAWINGS.
2. SEE DRAWING 1AWQDT03 "JUNCTION BOX STRUCTURAL DETAILS" FOR DETENTION POND OUTLET PLAN.
3. SEE TXDOT STANDARD SHEET "BOX CULVERTS PRECAST MISCELLANEOUS DETAILS SCP-MD" FOR MULTIPLE RCB UNIT PLACEMENT.

DENOTES HEADWALL REMOVAL

(1) PROVIDE A 2'-9" MIN CAST-IN-PLACE CONCRETE CLOSURE. BREAK BACK BOXES IN THE FIELD OR CAST BOXES SHORT. PROVIDE BANDS OF REINFORCING IN THE CLOSURE THAT ARE THE SAME SIZE AND SPACING AS IN THE PRECAST BOX SECTION. PROVIDE A MIN #4 LONGITUDINAL REINFORCEMENT SPACED AT 6 INCHES MAX WITHIN THE CLOSURE.

(2) EXTEND PRECAST BOX REINFORCEMENT A MINIMUM OF 2'-6" INTO CONCRETE CLOSURE.

(3) SAWCUT 1" DEEP AND REMOVE THE EXISTING HEADWALL CONCRETE IN ACCORDANCE WITH TXDOT ITEM 104 AND ITEM 496. EXISTING REINFORCEMENT TO REMAIN SHALL NOT BE DAMAGED AND SHALL BE STRAIGHTENED AND CLEANED PRIOR TO CASTING HEADWALL CONCRETE. IF ANY DAMAGE OCCURS, CONTACT ENGINEER OF RECORD FOR REPAIR PROCEDURE.

RELEASED FOR CONSTRUCTION 2023.05.31 15:59:49 -05'00'

STATE OF TEXAS
HUGO A. ALVAREZ-SOLIS
92085
PROFESSIONAL ENGINEER

2023.05.31 15:59:35 -05'00'

ISSUE RECORD

NO.	DESCRIPTION	DATE
00	RFC SUBMITTAL	29MAR23

CENTRAL TEXAS REGIONAL MOBILITY AUTHORITY

GREAT HILLS CONSTRUCTORS

PARSONS
TBPE Registration No. F-1481

183 NORTH MOBILITY
SEGMENT 1A
WOODS POND (BASIN D)
HEADWALL DETAILS

DESIGNED	FED. RD. DIV. NO.		FEDERAL AID PROJECT NO.	HIGHWAY NO.
HA	6			US 183
DRAWN	STATE	DISTRICT	COUNTY	DRAWING
SS	TEXAS	AUSTIN	TRAVIS, WILLIAMSON	1AWQDT04
CHECKED	CONTROL	SECTION	JOB	SHEET NO.
JA	0151	06	143	1AWQ022
APPROVED				
WD				

User: p006583A Date: 5/31/2023 Time: 3:18:22 PM Pen Table: 183N_Standard.tbl Plot Config: 183N PDF.pltcfg
File Name: 1A-WQDT-04.dgn

Culvert Station and/or Creek Name	Description of Box Culert No.Spans ~ Span X Height	Max Fill Height (ft)	Applicable Box Culvert Standard	Applicable Wingwall or End Treatment Standard	Skew Angle (0°,15°, 30° or 45°)	Side Slope or Channel Slope (SL:1)	T Culvert Top Slab Thick's (in)	U Culvert Wall Thick's (in)	C Estimated Curb Height (ft)	Hw Height of Wing (ft)	A Curb to End of Wingwall (ft)	B Offset of End of Wingwall (ft)	Lw Length of Longest Wingwall (ft)	Ltw Culvert Toewall Length (ft)	Atw Anchor Toewall Length (ft)	Riprap Apron (C.Y.)	Class "C" Conc. (Curb) (CY)	Class "C" Conc. (Wing.) (CY)	Total Wingwall Area (SF)
Woods Pond 2 - 4x2 RCB	2 - 4' X 2' RBC	8'	MC-4-23	FW-0	0	4:1	8"	7"	1.000	3.330	12.000	6.920	13.850	13.170	N/A	N/A	0.4	3.5	47

NOTE:
* CULVERTS WITH NON STANDARD SKEW ANGLE

NOTES:
Skew Angle = 0° for SW-0, FW-0, SETB-CD, SETB-SW-0, and SETB-FW-0 standards.
30° Maximum for Safety End Treatment

SL:1 = Horizontal:1 Vertical
Side Slope at culvert for Flared or Straight Wingwalls. Channel Slope for Parallel Wingwalls.
Slope shall be 3:1 or flatter for Safety End Treatments.

T = Box Culvert Top Slab Thickness. Dimension can be found on the applicable Box Culvert Standard.

U = Box Culvert Wall Thickness. Dimension can be found on the applicable Box Culvert Standard.

C = Curb Height.

See applicable wing or end treatment standards for calculations of Hw, A, B, Lw, Ltw, Atw, and Total Wingwall Area.
Hw = Height of Wingwall.
A = Distance from Face of Curb to End of Wingwall (Not applicable to Parallel or Straight Wingwalls).
B = Offset of End of Wingwall (Not applicable to Parallel or Straight Wingwalls).
Lw = Length of Longest Wingwall.
Ltw = Length of Culvert Toewall (Not applicable when using Riprap Apron).
Atw = Length of Anchor Toewall (Applicable to Safety End Treatment only).
Total Wingwall Area = Wingwall area in S.F. for two wingwalls (one structure end) if Lt or Rt.
Area for four wingwalls (two structure ends) if Both.

1. The wall heights shown will be rounded to the nearest Foot for bidding purposes.
2. Concrete volume shown is for box culvert curb only. For curbs using the RAC standard, quantities shown must be increased by a factor of 2. If Class "S" concrete is required for the top slab of the culvert, the curb concrete shall also be Class "S". Curb concrete is considered part of the Box Culvert for payment.
3. Concrete volume shown is total of wing, footing, culvert toewall (if any), anchor toewall (if any) and wingwall toewall. Riprap apron, culvert and curb quantities are not included.
4. Regardless of the type of culvert shown on this sheet, the Contractor shall have the option of furnishing cast-in-place or precast culverts unless otherwise shown elsewhere on the plans. If the Contractor elects to provide culverts of a different type than those shown on this sheet, it shall be the Contractor's responsibility to make the necessary adjustments to the dimensions and quantities shown.
5. "SCP-X" and "SCP-MD" standards apply to the constructed multiple box culverts.

RELEASED FOR CONSTRUCTION Date: 2023.05.26 14:57:54 -05'00'

STATE OF TEXAS
PATRICK M. GIBBONS
113697
LICENSED PROFESSIONAL ENGINEER

Date: 2023.05.26 14:54:42 -05'00'

ISSUE RECORD

NO.	DESCRIPTION	DATE
00	RFC DESIGN	29MAR23

CENTRAL TEXAS REGIONAL MOBILITY AUTHORITY

GREAT HILLS CONSTRUCTORS

PARSONS
TBPE Registration No. F-1481

183 NORTH MOBILITY
SEGMENT 1A
BOX CULVERT SUPPLEMENT
WINGS & END TREATMENTS

DESIGNED	FED. RD. DIV. NO.		FEDERAL AID PROJECT NO.	HIGHWAY NO.
KR	6			US 183
DRAWN	STATE	DISTRICT	COUNTY	DRAWING
RG	TEXAS	AUSTIN	TRAVIS, WILLIAMSON	1AWQBCS01
CHECKED	CONTROL	SECTION	JOB	SHEET NO.
MM	0151	06	143	1AWQ023
APPROVED				
MW				

User: p001433F Date: 5/26/2023 Time: 12:12:28 PM Pen Table: 183N_Standard.tbl Plot Config: 183N PDF.pltcfg
File Name: 1AWQBCS01.dgn

APPENDIX H
WATER QUALITY OUTLET CONTROL SIZING CALCULATIONS

BASIN B

GREAT HILLS CONSTRUCTORS

183 N MOBILITY PROJECT
SEGMENT 1A

PARSONS

Submittal: RFC

Date: 03/29/2023

Basin B - Hymeadow 2D1
Outfall Sizing Calculations

Prepared By: K. Rich

Checked By: N. Boraud

Total Volume of Pond =	0.333	ac/ft
Total Volume of Pond =	14,487	cu/ft
Drawdown Time =	48	Hours
Discharge Rate =	0.08	cfs
OUTFALL		
Pipe Material	PVC	
Mannings N =	0.011	
Pipe Slope =	0.013	ft/ft
Outfall Diameter =	6	in
Outfall Quantity=	1	
Velocity less than 3fps	Yes	

Pipe Dia (in)	Q (cfs)	V (fps)
6	0.75	3.82
8	1.62	4.64
10	2.94	5.38
12	4.78	6.08
15	8.67	7.07
18	14.10	7.98

Note:

1. Calculations are based upon pipes flowing full

Design of the Water Quality Plans and Outflow Structures are based on the Project Technical Provisions and Section 3.4.18, Design Criteria for Batch Detention Basins, included in TCEQ Bulletin RG 348, "Complying with the Edwards Aquifer Rules Technical Guidance on Best Management Practices" (Revised July 2005) Addendum Sheet dated January 20, 2017.

BASIN C

GREAT HILLS CONSTRUCTORS

183 N MOBILITY PROJECT
SEGMENT 1A

PARSONS

Submittal: RFC

Date: 03/29/2023

Basin C - Pond Springs WQ Basin
Outfall Sizing Calculations

Prepared By: K. Rich

Checked By: N. Boraud

Total Volume of Pond =	1.140	ac/ft
Total Volume of Pond =	49,672	cu/ft
Drawdown Time =	48	Hours
Discharge Rate =	0.29	cfs
OUTFALL		
Pipe Material	PVC	
Mannings N =	0.009	
Pipe Slope =	0.003	ft/ft
Outfall Diameter =	8	in
Outfall Quantity=	1	
Velocity less than 3fps	Yes	

Pipe Dia (in)	Q (cfs)	V (fps)
6	0.44	2.25
8	0.95	2.72
10	1.72	3.16
12	2.80	3.57
15	5.09	4.15
18	8.28	4.69

Note:

1. Calculations are based upon pipes flowing full

Design of the Water Quality Plans and Outflow Structures are based on the Project Technical Provisions and Section 3.4.18, Design Criteria for Batch Detention Basins, included in TCEQ Bulletin RG 348, "Complying with the Edwards Aquifer Rules Technical Guidance on Best Management Practices" (Revised July 2005) Addendum Sheet dated January 20, 2017.

APPENDIX I
HISTORICAL WPAP PERMITS

Crespo
CCS 181

WATER POLLUTION ABATEMENT PLAN
AND
SEWAGE COLLECTION SYSTEM APPLICATION
FOR
SH 45/ US 183 INTERHCANGE
PARMER LANE TO RIDGELINE

Prepared For:
Texas Department of Transportation
Texas Turnpike Authority Division

Prepared By:
HNTB Corporation
1701 Directors Boulevard
Suite 770
Austin, Texas 78744

April 2003

HNTB

TEXAS DEPARTMENT OF TRANSPORTATION

Texas Turnpike Authority Division

Water Pollution Abatement Plan
And Sewage Collection System Application
SH 45/US 183 Interchange
Parmer Lane to Ridgeline

Prepared for:

Texas Turnpike Authority Division
Texas Department of Transportation
1421 Wells Branch Parkway
Building 1, Suite 107
Austin, Texas 78660

Prepared by:

HNTB Corporation
1701 Directors Blvd.
Suite 770
Austin, Texas 78744

Date: April 2003

TABLE OF CONTENTS

Chapter 1	TNRCC-10400	Core Data Form
	TNRCC-0587	General Information Form Attachment A – Road Map Attachment B – USGS/Edwards Recharge Zone Map
Chapter 2	TNRCC-0585	Geologic Assessment Geologic Assessment Table Geologic Stratigraphic Column Narrative Description of Site Specific Geology Site Geologic Maps All Known Wells
Chapter 3	TNRCC-0584	Water Pollution Abatement Plan Application
	TNRCC-0592	WPAP General Construction Notes
Chapter 4	TNRCC-0602	Temporary Stormwater Section Attachment G – Drainage Area Map Attachment H – Temporary Sediment Pond(s) Plans and Calculations Attachment I – Inspection and Maintenance for BMPs
Chapter 5	TNRCC-0600	Permanent Stormwater Section Attachment C – Pollutant Loading and BMP Calculations Attachment F – Construction Plans Attachment G – Inspection, Maintenance, Repair and Retrofit Plan
Chapter 6	TNRCC-0599	Agent Authorization Form
Chapter 7	Site Plans	Attached plan sheet; includes Site Geologic Map information
Chapter 8	TNRCC-0582	Sewage Collection System Application
		Water and wastewater plans
	TNRCC-F-0596	Organized Sewage Collection System General Construction Notes
	TNRCC-F-0574	Fee Application Form

TNRCC-10400

CORE DATA FORM

TNRCC Core Data Form

TNRCC Use Only

If you have questions on how to fill out this form or about our Central Registry, please contact us at 512-239-5175.

Individuals are entitled to request and review their personal information that the agency gathers on its forms. They may also have any errors in their information corrected. To review such information, contact us at 512-239-3282.

SECTION I: General Information

1. Reason for Submission *Example: new wastewater permit; IHW registration; change in customer information; etc.*
Roadway and bridge construction

2. Attachments ☐ Yes ☒ No
Describe Any Attachments: *(ex: Title V Application, Waste Transporter Application, etc.)*

3. Customer Reference Number-*if issued*
CN *(9 digits)*

4. Regulated Entity Reference Number-*if issued*
RN *(9 digits)*

SECTION II: Customer Information

5. Customer Role *(Proposed or Actual)* -- As It Relates to the Regulated Entity Listed on This Form

Please check one of the following: ☒ Owner ☐ Operator ☐ Owner and Operator
☐ Occupational Licensee ☐ Volunteer Cleanup Applicant ☒ Other: **TxDOT, Texas Turnpike Authority**

TNRCC Use Only ☐ Superfund ☐ PST ☐ Respondent

6. General Customer Information
☒ New Customer ☐ Change to Customer Information ☐ Change in Regulated Entity Ownership ☒ No Change*
*If "No Change" and Section I is complete, skip to Section III - Regulated Entity Information.

7. Type of Customer: ☐ Individual ☐ Sole Proprietorship - D.B.A. ☐ Partnership ☒ Corporation
☐ Federal Government ☒ State Government ☐ County Government ☐ City Government
☐ Other Government ☐ Other

8. Customer Name *(If an individual, please print last name first)* *If new name, enter previous name:*
Texas Turnpike Authority; A Division of TxDOT

9. Mailing Address: **125 E. 11th Street**

City	State	ZIP	ZIP + 4
Austin	**TX**	**78701**	**2433**

10. Country Mailing Information *if outside USA*
N/A

11. E-Mail Address *if applicable*
N/A

12. Telephone Number
(512)936-0903

13. Extension or Code
N/A

14. Fax Number *if applicable*
( ) -

15. Federal Tax ID *(9 digits)*

16. State Franchise Tax ID Number *if applicable*

17. DUNS Number *if applicable (9 digits)*

18. Number of Employees
☐ 0-20 ☐ 21-100 ☐ 101-250 ☐ 251-500 ☐ 501 and higher

19. Independently Owned and Operated?
☐ YES ☒ NO

SECTION III: Regulated Entity Information

20. General Regulated Entity Information
☒ New Regulated Entity ☐ Change to Regulated Entity Information ☐ No Change*
*If "No Change" and Section I is complete, skip to Section IV - Preparer Information.

21. Regulated Entity Name *(If an individual, please print last name first)*
Phillip Russell, P.E.; Director-Texas Turnpike Authority - Texas Department of Transportation

22. Street Address: 125 E. 11th Street *(No P.O. Boxes)*				
	City Austin	State TX	ZIP 78701	ZIP + 4 2433
23. Mailing Address: 124 E. 11th Street				
	City Austin	State TX	ZIP 78701	ZIP + 4 2433

24. E-Mail Address: N/A

25. Telephone Number	26. Extension or Code	27. Fax Number *if applicable*
(512)936-0903		( ) -

28. Primary SIC Code *(4 digits)*	29. Secondary SIC Code *(4 digits)*	30. Primary NAICS Code *(5 or 6 digits)*	31. Secondary NAICS Code *(5 or 6 digits)*

32. What is the Primary Business of this entity? *(Please do not repeat the SIC or NAICS description.)*
Tollway, design, construction and maintenance

Questions 33 - 37 address geographic location. Please refer to the instructions for applicability.

33. County: Williamson

34. Description of Physical Location
SH 45 from Parmer Lane to Ridgeline

35. Nearest City	State	Nearest ZIP
Austin	TX	78750

36. Latitude (N)			37. Longitude (W)		
Degrees	Minutes	Seconds	Degrees	Minutes	Seconds
30	28	3	97	47	47

38. TNRCC Programs In Which This Regulated Entity Participates *Not all programs have been listed. Please add to this list as needed. If you don't know or are unsure, please mark "unknown."*

☐ Animal Feeding Operation	☐ Petroleum Storage Tank	☒ Water Rights
☐ Title V – Air	☐ Wastewater Permit	☒ Edwards Aquifer Program
☐ Industrial & Hazardous Waste	☐ Water Districts	☐
☐ Municipal Solid Waste	☐ Water Utilities	☒ Unknown
☐ New Source Review - Air	☐ Licensing - TYPE(s)	

SECTION IV: Preparer Information

39. Name	40. Title
John W. Strybos, P.E.	Project Manager

41. Telephone Number	42. Extension or Code	43. Fax Number *if applicable*
(210)349-2277		(210)349-2101

44. E-Mail Address: jstrybos@hntb.com

TNRCC-0587

GENERAL INFORMATION FORM

General Information Form
For Regulated Activities on the
Edwards Aquifer Recharge and Transition Zones
And Relating to 30 TAC §213.4(b) & §213.5(b)(2)(A), (B)
Effective June 1, 1999

REGULATED ENTITY NAME: *SH45/US183 Interchange, Parmer Lane to* Ridgeline
COUNTY: *Williamson* STREAM BASIN: *Lake Creek (Brazos Basin)*

EDWARDS AQUIFER: X RECHARGE ZONE
__ TRANSITION ZONE

PLAN TYPE: X WPAP __ AST __ EXCEPTION
X SCS __ UST __ MODIFICATION

CUSTOMER INFORMATION

1. Agent/Representative (If any):

Contact Person: *John Strybos*
Entity: *HNTB Corporation*
Mailing Address: *85 NE Loop 410., Suite 304*
City, State: *San Antonio, TX* Zip: *78216*
Telephone: *210-349-2277* FAX: *210-349-2101*

2. X This project is inside the city limits of *Austin and Cedar Park*.
X This project is outside the city limits but inside the ETJ (extra-territorial jurisdiction) of *Austin*.
__ This project is not located within any city's limits or ETJ.

3. The location of the project site is described below. The description provides sufficient detail and clarity so that the TCEQ's Regional staff can easily locate the project and site boundaries for a field investigation.

Site comprises approximately 4 miles of RM 620 from Parmer Lane on the east to Pecan Park on the west, merging with approximately 1 mile of US 183 roughly split at the 620/183 intersection.

4. X **ATTACHMENT A - ROAD MAP**. A road map showing directions to and the location of the project site is attached at the end of this form.

5. X **ATTACHMENT B - USGS / EDWARDS RECHARGE ZONE MAP**. A copy of the official 7 ½ minute USGS Quadrangle Map (Scale: 1" = 2000') of the Edwards Recharge Zone is attached ~~behind this sheet~~ *in Chapter 1 of Site Plans*. The map(s) should clearly show:

X Project site.
X USGS Quadrangle Name(s).
X Boundaries of the Recharge Zone (and Transition Zone, if applicable).

X Drainage path from the project to the boundary of the Recharge Zone.

6. X Sufficient survey staking is provided on the project to allow TCEQ regional staff to locate the boundaries and alignment of the regulated activities and the geologic or manmade features noted in the Geologic Assessment. **The TCEQ must be able to inspect the project site or the application will be returned.**

7. X **ATTACHMENT C - PROJECT DESCRIPTION.** ~~Attached at the end of this form~~ *Below* is a detailed narrative description of the proposed project:

The project comprises upgrading of approximately 4 miles of RM 620 from Parmer Lane to Ridgeline to a toll highway to be called SH 45. It includes a multi-level interchange at SH 45 and US 183, extending (merging) approximately ½ mile in each direction north and south on US 183.

The project will upgrade the existing four-lane RM 620 to a seven-lane toll way plus future three HOV lanes in the center and three-lane access roads on either side within a 400-ft (typ.) right-of-way (ROW). Additional ROW will need to be acquired. Overpasses will be constructed at major cross streets. The interchange at US 183 will include direct connectors for each roadway.

The project will include utility relocation/adjustment as well as toll booth construction and associated utilities.

8. Existing project site conditions are noted below:
   - X Existing commercial site
   - ___ Existing industrial site
   - ___ Existing residential site
   - X Existing paved and/or unpaved roads
   - X Undeveloped (Cleared)
   - ___ Undeveloped (Undisturbed/Uncleared)
   - ___ Other:

PROHIBITED ACTIVITIES

9. X I am aware that the following activities are prohibited on the **Recharge Zone** and are not proposed for this project:

   (1) waste disposal wells regulated under 30 TAC Chapter 331 of this title (relating to Underground Injection Control);
   (2) new feedlot/concentrated animal feeding operations, as defined in 30 TAC §213.3;
   (3) land disposal of Class I wastes, as defined in 30 TAC §335.1;
   (4) the use of sewage holding tanks as parts of organized collection systems; and
   (5) new municipal solid waste landfill facilities required to meet and comply with Type I standards which are defined in §330.41(b), (c), and (d) of this title (relating to Types of Municipal Solid Waste Facilities).

10. N/A I am aware that the following activities are prohibited on the **Transition Zone** and are not proposed for this project:

(1) waste disposal wells regulated under 30 TAC Chapter 331 (relating to Underground Injection Control);
(2) land disposal of Class I wastes, as defined in 30 TAC §335.1; and
(3) new municipal solid waste landfill facilities required to meet and comply with Type I standards which are defined in §330.41 (b), (c), and (d) of this title.

ADMINISTRATIVE INFORMATION

11. The fee for the plan(s) is based on:

*N/A** For a Water Pollution Abatement Plan and Modifications, the total acreage of the site where regulated activities will occur.
*N/A** For an Organized Sewage Collection System Plans and Modifications, the total linear footage of all collection system lines.
__ For a UST Facility Plan or an AST Facility Plan, the total number of tanks or piping systems.
__ A Contributing Zone Plan.
__ A request for an exception to any substantive portion of the regulations related to the protection of water quality.
__ A request for an extension to a previously approved plan.

**Note: TXDOT is not required to pay a fee.*

12. Application fees are due and payable at the time the application is filed. If the correct fee is not submitted, the TCEQ is not required to consider the application until the correct fee is submitted. Both the fee and the Edwards Aquifer Fee Form have been sent to the Commission's:

__ TCEQ cashier
*N/A** Austin Regional Office (for projects in Hays, Travis, and Williamson Counties)
__ San Antonio Regional Office (for projects in Bexar, Comal, Kinney, Medina, and Uvalde Counties)

**Note: TXDOT is not required to pay a fee or submit a fee form.*

13. *X* Submit one (1) original and three (3) copies of the completed application to the appropriate regional office for distribution by the TCEQ to the local municipality or county, groundwater conservation districts, and the TCEQ's Central Office.

14. *X* No person shall commence any regulated activity until the Edwards Aquifer Protection Plan(s) for the activity has been filed with and approved by the executive director.
__ No person shall commence any regulated activity until the Contributing Zone Plan for the activity has been filed with the executive director.

To the best of my knowledge, the responses to this form accurately reflect all information requested concerning the proposed regulated activities and methods to protect the Edwards Aquifer. This **GENERAL INFORMATION FORM** is hereby submitted for TCEQ review. The application was prepared by:

Print Name of Applicant/Owner/Agent

L. Stephen Stecher 4-18-03

Crespo Consulting Services, Inc. Date
L. Stephen Stecher, P.E., #55645

HNTB ARCHITECTS ENGINEERS PLANNERS

85 N.E. Loop 410
Suite 304
San Antonio, Texas
78216-5866
(210) 349-2277
FAX (210) 349-2101
www.hntb.com

April 21, 2003

Mr. Atef Elzeftawy, P.E.
Texas Turnpike Authority
1421 Wells Branch Parkway
Building 1, Suite 107
Pflugerville, Texas 78660

Subject: Section Engineer
TTA Contract Number 86-0XXP5004
HNTB Job Number 32058

Dear Mr. Elzeftawy:

Enclosed are the following documents for the SH 45 Section 8 submitted for your review and comment.

- Revised Water Pollution Abatement Plan (WPAP) one (1) original and eight (8) copies
- Redmark copy of WPAP one (1) original

Please contact Mr. Richard Ridings or Mr. Charles Dodge at 447-5590 if you should have any questions regarding these documents.

Respectfully yours,

HNTB Corporation

Charles A. Dodge, P.E.
Senior Project Manager

Enclosures

Elzeftawy23.doc

ATTACHMENT A

Road Map

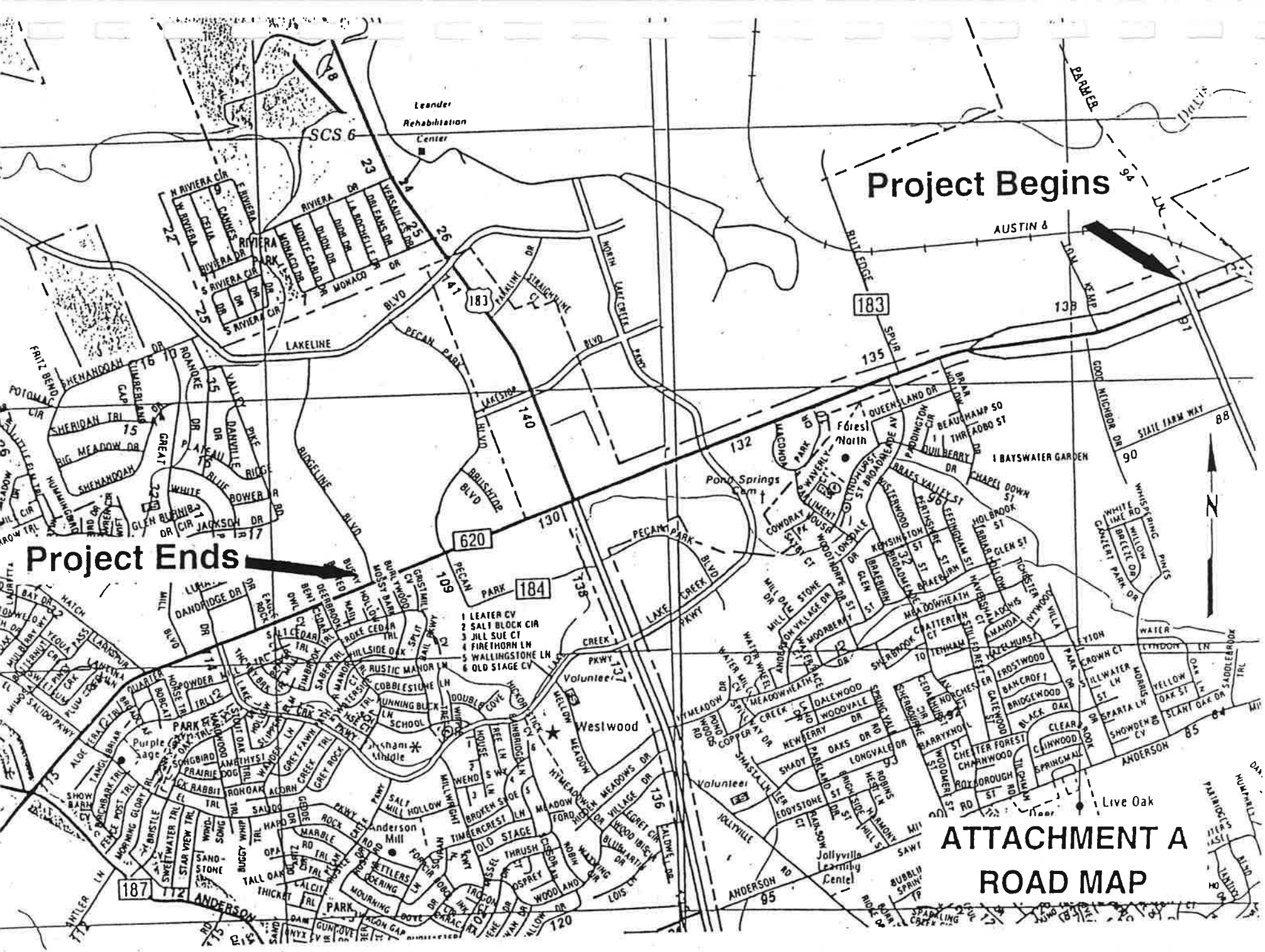
Project Begins
Project Ends
ATTACHMENT A
ROAD MAP
Leander Rehabilitation Center
SCS 6
Westlwood
Anderson Mill
Live Oak
Jollyville
Forest North
Pond Springs Cem
Volunteer
Jollyville Learning Center
PARMER
AUSTIN &
LAKELINE
PECAN PARK
RIDGELINE BLVD
LAKE CREEK PKWY
ANDERSON
183
620
184
1 LEATER CV
2 SALT BLOCK CIR
3 JILL SUE CT
4 FIRETHORN LN
5 WALLINGSTONE LN
6 OLD STAGE CV

ATTACHMENT B

USGS/Edwards Recharge Zone Map
Included in Site Plans Chapter 1

TNRCC-0585

GEOLOGIC ASSESSMENT

Geologic Assessment
For Regulated Activities
on The Edwards Aquifer Recharge/transition Zones
and Relating to 30 TAC §213.5(b)(3), Effective June 1, 1999

REGULATED ENTITY NAME: State Highway 45 / U. S. Highway 183 Interchange, located along and adjacent to FM 620 from Ridgeline Boulevard (Station 117 + 00) to Parmer Lane (Station 260 + 00) in southern Williamson County, Texas.

TYPE OF PROJECT: X WPAP __ AST X SCS __ UST

LOCATION OF PROJECT: X Recharge Zone __ Transition Zone __ Contributing Zone within the Transition Zone

PROJECT INFORMATION

1. X Geologic or manmade features are described and evaluated using the attached **GEOLOGIC ASSESSMENT TABLE.**

2. Soil cover on the project site is summarized in the table below and uses the SCS Hydrologic Soil Groups* (*Urban Hydrology for Small Watersheds, Technical Release No. 55, Appendix A*, Soil Conservation Service, 1986). If there is more than one soil type on the project site, show each soil type on the site Geologic Map or a separate soils map. *See attached **Soils Map** in Chapter 2 of Site Plans. (USDA Soil Conservation Service. Williamson County, Texas Soil Survey. January 1983.)*

Soil Units, Infiltration Characteristics & Thickness		
Soil Name	Group*	Thickness (feet)
Fairlie	D	3.3 - 5
Eckrant	D	0.4 – 1.7
Georgetown	D	1.7 - 3.3
Crawford	D	1.7 – 3.3

* Soil Group Definitions (Abbreviated)

A. Soils having a high infiltration rate when thoroughly wetted.

B. Soils having a moderate infiltration rate when thoroughly wetted.

C. Soils having a slow infiltration rate when thoroughly wetted.

D. Soils having a very slow infiltration rate when thoroughly wetted.

3. X A **STRATIGRAPHIC COLUMN** is attached at the end of this form that shows formations, members, and thicknesses. The outcropping unit should be at the top of the stratigraphic column.

4. X A **NARRATIVE DESCRIPTION OF SITE SPECIFIC GEOLOGY** is attached at the end of this form. The description must include a discussion of the potential for fluid movement to the Edwards Aquifer, stratigraphy, structure, and karst characteristics of the site.

5. X Appropriate **SITE GEOLOGIC MAP(S)** are attached: *Site Geologic Maps are included on the Site Plans in Chapter 7*

The Site Geologic Map must be the same scale as the applicant's Site Plan. The minimum scale is 1" : 400'

Applicant's Site Plan Scale 1" = 100 '

Site Geologic Map Scale 1" = 100 '
Site Soils Map Scale (if more than 1 soil type) 1" = 1668 '

6. Method of collecting positional data:
___ Global Positioning System (GPS) technology.
X Other method(s).

7. X The project site is shown and labeled on the Site Geologic Map.

8. X Surface geologic units are shown and labeled on the Site Geologic Map.

9. X Geologic or manmade features were discovered on the project site during the field investigation. They are shown and labeled on the Site Geologic Map and are described in the attached Geologic Assessment Table.
___ Geologic or manmade features were not discovered on the project site during the field investigation.

10. X The Recharge Zone boundary is shown and labeled, if appropriate.

11. All known wells (test holes, water, oil, unplugged, capped and/or abandoned, etc.):

X There are 2 (#) wells present on the project site and the locations are shown and labeled. (Check all of the following that apply.)
___ The wells are not in use and have been properly abandoned.
X The wells are not in use and will be properly abandoned.
___ The wells are in use and comply with 16 TAC §76.
___ There are no wells or test holes of any kind known to exist on the project site.

ADMINISTRATIVE INFORMATION

12. X One (1) original and three (3) copies of the completed assessment has been provided.

Date(s) Geologic Assessment was performed: Februay 5-18, 2000 and March 5, 2003
Date(s)

To the best of my knowledge, the responses to this form accurately reflect all information requested concerning the proposed regulated activities and methods to protect the Edwards Aquifer. My signature certifies that I am qualified as a geologist as defined by 30 TAC 213.

James W. Sansom, Jr., PG
Print Name of Geologist
Assisted by Robert L. Bluntzer, PG

512 515-0916
Telephone

512 515-0916
Fax

James W. Sansom Jr
Signature of Geologist

March 11, 2003
Date

Representing: James W. Sansom, Jr., PG, Consulting Geologist
(Name of Company)

If you have questions on how to fill out this form or about the Edwards Aquifer Protection Program, please contact us at 512/939-2929 (Austin) or 210/403-4024 (San Antonio).

Individuals are entitled to request and review their personal information that the agency gathers on its forms. They may also have any errors in their information corrected. To review such information, contact us at 512/239-3282.

GEOLOGIC ASSESSMENT TABLE

PROJECT NAME: SH 45 / U.S. 183 Interchange

LOCATION			FEATURE CHARACTERISTICS											EVALUATION			PHYSICAL SETTING		
1A	1B *	1C*	2A	2B	3	4			5	5A	6	7	8A	8B	9	10		11		12
FEATURE ID	LATITUDE	LONGITUDE	FEATURE TYPE	POINTS	FORMATION	DIMENSIONS (FEET)			TREND (DEGREES)	DOM	DENSITY (NO/FT)	APERTURE (FEET)	INFILL	RELATIVE INFILTRATION RATE	TOTAL	SENSITIVITY		CATCHMENT AREA (ACRES)		TOPOGRAPHY
						X	Y	Z		10						<40	≥40	<1.8	≥1.8	
S-4			CD	5	Ked	7	5.5	0.7					F	7	12	✓		✓		Hillside
S-5			CD	5	Ked	17	6.5	3					F,C	35	40		✓		✓	"
S-6			MB	30	Ked	0.3	0.3	12.3					N	10	40		✓	✓		"
S-7			MB	30	Ked	30	25	1.5					F,C	18	48		✓		✓	Streambed
S-8			MB	30	Ked	75	12	2					F,C	18	48		✓		✓	"
S-9			CD	5	Ked	11	6	3					F	18	23	✓			✓	"
S-17			CD	5	Ked	3	4	0.6					F	15	22	✓		✓		Hillside
S-18			CD	5	Ked	17	7.5	1.2					F,C	10	15	✓			✓	"
S-19			SC	20	Ked	2+	0.5	0.9	N 10° E	✓			F	35	65		✓	✓		"
						3+	2.5	1+												
S-20			MB	30	Ked	0.5	0.5	?					N	25	55		✓		✓	"
S-21			MB	30	Ked	3.4	2.5	2.7					F,C	18	48		✓		✓	"
						2.7	1.2	2.4												
						1.4	1.1	2.3												
S-22			CD	5	Ked	25	18	1					F,C	18	23	✓		✓		"
S-23			MB	30	Ked	1.1	1.1	2.5					F,C	8	38	✓		✓		"
						0.8	0.4	1.8												

* DATUM:

2A TYPE	TYPE	2B POINTS
C	Cave	30
SC	Solution cavity	20
SF	Solution-enlarged fracture(s)	20
F	Fault	20
O	Other natural bedrock features	5
MB	Manmade feature in bedrock	30
SW	Swallow hole	30
SH	Sinkhole	20
CD	Non-karst closed depression	5
Z	Zone, clustered or aligned features	30

8A INFILLING	
N	None, exposed bedrock
C	Coarse - cobbles, breakdown, sand, gravel
O	Loose or soft mud or soil, organics, leaves, sticks, dark colors
F	Fines, compacted clay-rich sediment, soil profile, gray or red colors
V	Vegetation. Give details in narrative description
FS	Flowstone, cements, cave deposits
X	Other materials

12 TOPOGRAPHY
Cliff, Hilltop, Hillside, Drainage, Floodplain, Streambed

I have read, I understood, and I have followed the Texas Natural Resource Conservation Commission's Instructions to Geologists. The information presented here complies with that document and is a true representation of the conditions observed in the field.
My signature certifies that I am qualified as a geologist as defined by 30 TAC 213

_____ Date

Sheet 1 of 2

GEOLOGIC ASSESSMENT TABLE			PROJECT NAME: SH 45 / US 183 Interchange																	
LOCATION			FEATURE CHARACTERISTICS												EVALUATION			PHYSICAL SETTING		
1A	1B*	1C*	2A	2B	3	4			5	5A	6	7	8A	8B	9	10		11		12
FEATURE ID	LATITUDE	LONGITUDE	FEATURE TYPE	POINTS	FORMATION	DIMENSIONS (FEET)			TREND (DEGREES)	DOM	DENSITY (NO/FT)	APERTURE (FEET)	INFILL	RELATIVE INFILTRATION RATE	TOTAL	SENSITIVITY		CATCHMENT AREA (ACRES)		TOPOGRAPHY
						X	Y	Z		10						<40	≥40	<1.6	≥1.6	
S-24			MB	30	Ked	1	0.6	2					F,C	8	38	✓		✓		Hillside
S-25			MB	30	Ked	2.7	0.9	1.2					F,C	8	38	✓		✓		"
S-26			MB	30	Ked	3.8	0.6	2.2					F,C	8	38	✓		✓		"
						3.3	0.8	4.2												
S-27			MB	30	Ked	0.5	0.5	0.8					F,C	18	48		✓		✓	"
						5	2	3+												
S-28			MB	30	Ked	2.2	0.7	2.3					F,C	8	38	✓		✓		"

* DATUM:

2A TYPE	TYPE	2B POINTS
C	Cave	30
SC	Solution cavity	20
SF	Solution-enlarged fracture(s)	20
F	Fault	20
O	Other natural bedrock features	5
MB	Manmade feature in bedrock	30
SW	Swallow hole	30
SH	Sinkhole	20
CD	Non-karst closed depression	5
Z	Zone, clustered or aligned features	30

8A INFILLING	
N	None, exposed bedrock
C	Coarse - cobbles, breakdown, sand, gravel
O	Loose or soft mud or soil, organics, leaves, sticks, dark colors
F	Fines, compacted clay-rich sediment, soil profile, gray or red colors
V	Vegetation. Give details in narrative description
FS	Flowstone, cements, cave deposits
X	Other materials

12 TOPOGRAPHY
Cliff, Hilltop, Hillside, Drainage, Floodplain, Streambed

I have read, I understood, and I have followed the Texas Natural Resource Conservation Commission's Instructions to Geologists. The information presented here complies with that document and is a true representation of the conditions observed in the field.

My signature certifies that I am qualified as a geologist as defined by 30 TAC 213

Jerna W. Sanson Jr.

Date March 11, 2003

Sheet 2 of 2

TNRCC-0585-Table (Rev. 5-1-02)

Geologic Assessment Table
S. H. 45 / U. S. 183 Interchange

Section 1, Comments

S-1,5,9,18	All of these features are closed depressions (CDs) that were found in small drainages that were most likely the result of scour.
S-2,4,10,11,17	These CDs all seem to be naturally occurring, although S-10 may possibly be the result of scour.
S-3,12,13	There is evidence at CD S-3 that man's activities have had influence on its development. S-12 and S-13 are located in an area that has been considerably disturbed over the recent years, therefore these may have been the result of these man's activities as well.
S-6,15,16,20	Feature S-6 is a monitor well. Features S-15, S-16, and S-20 are water wells that are currently in use by their owners.
S-7,8,14	All of these features are CDs that have been created as the result of man-made dams that have been constructed.
S-19	This feature is a small solution feature in the outcrop of limestone bedrock.
S-21,22,23,24, 25,26,27,28	All of these features are man made in that they are the result of the placement of fill material over an area. Limestone cobbles, boulders, and soils were randomly dumped in the area. Openings between tilted rocks developed in places as the soil settled between the large limestone rocks, thus creating the openings observed and measured. Small animals have dug into these openings and enlarged them. Most of these features extend horizontally from the openings to unknown dimensions. Some of the fill area is uneven and hummocky. Feature S-21 covers an area approximately 10 feet wide and 60 feet long. In this area there are about 10 separate openings, the largest of which is measured and described in the Geologic Assessment Table. Feature S-17 is similar to S-21, for it has 12 separate openings that are parallel to the property fence adjacent of FM 620. The openings are within10 feet of the fence and extend about 80 feet northeast from the gate to the property. They range in size from 0.5' wide X 0.5' long X 0.8' deep to 2' wide X 5' long X +/-3' deep.

Geologic Assessment
S. H. 45 / U.S. 183 Interchange

Section 2, Soils Attachment

The Fairlie, Eckrant, Georgetown, and Crawford soil series occur within the right-of-way alignment of the proposed highway. Fairlie soils occupy approximately 86 percent and the Eckrant soils about 8 percent of the alignment. The Georgetown and Crawford soil series occur along about 6 percent of the alignment. The proposed alignment of State Highway 45, in the area addressed by this assessment, follows FM 620 from its western end at the intersection of Ridgeline Boulevard with FM 620 to its eastern end at the intersection of Parmer Lane with FM 620. The right-of-way of SH 45 extends beyond the current right-of-way of FM 620 to the northwest up to 400 feet.

The majority of the alignment west of U.S. Highway 183 is covered with roadways and parking lot pavement, businesses, and disturbed areas. East of U.S. Highway 183 the alignment is relatively undisturbed and covered with grass, brush, and trees. Parts of this area have been covered with fill material.

The Soils Map included in this assessment is a reproduction of Sheets 82 and 73 of Werchan's and Coker's, 1983 "Soil Survey of Williamson County, Texas." that was published by the Soil Conservation Service of the U. S. Department of Agriculture.

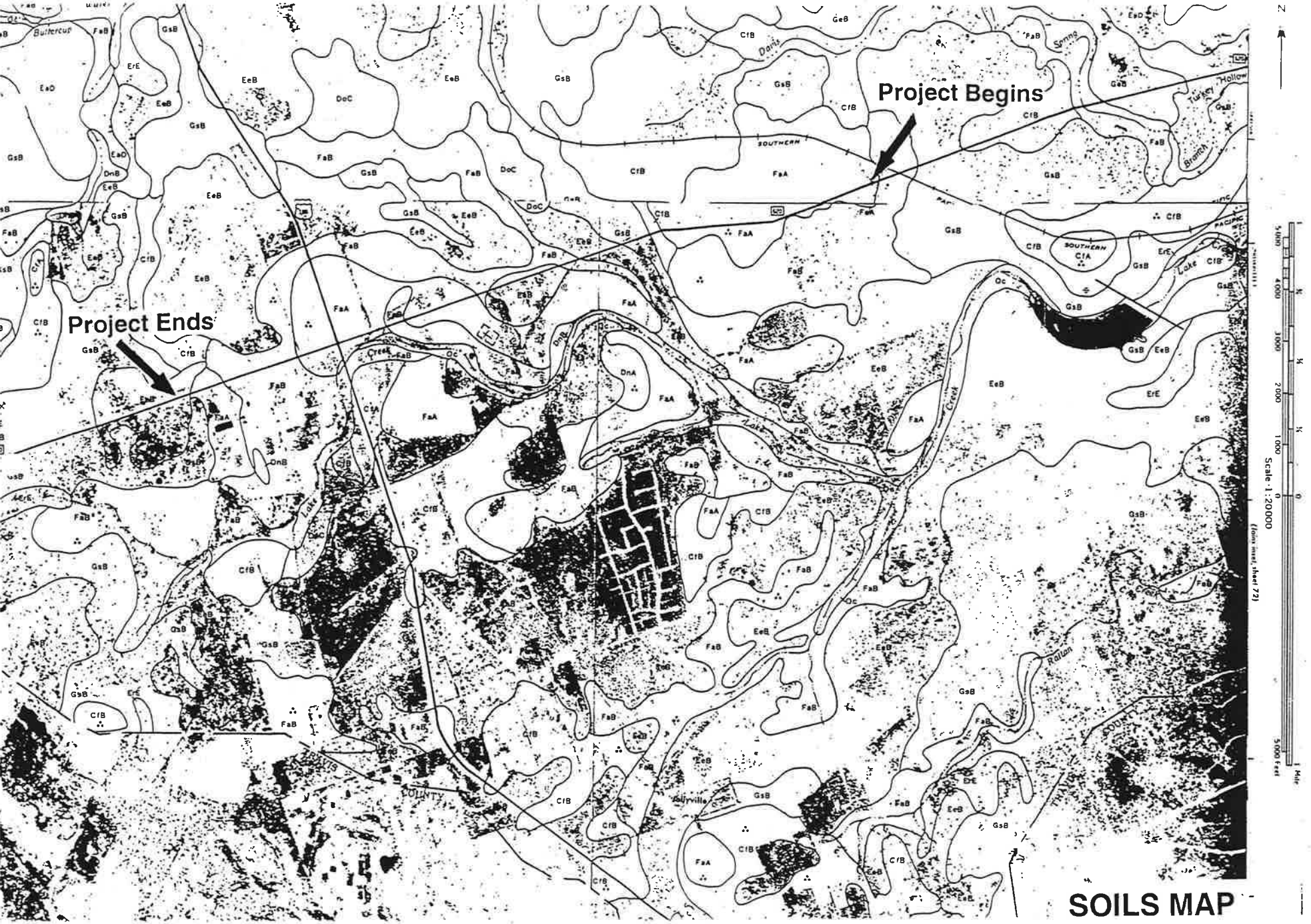
Project Begins
Project Ends
Scale 1:20000
(Joins inset, sheet 72)
SOUTHERN
Lake
Creek
Turkey Hollow
Branch
Spring
Dams
Buttercup
Raritan
TRAVIS
COUNTY
Jollyville
N

SOILS MAP

Geologic Assessment
S.H. 45 / U.S. 183 Interchange

Section 4, Narrative description of the site-specific geology.

The proposed highway alignment is located on the outcrop of the Edwards formation. The Edwards formation is approximately 30 to 40 feet thick. It is a fine to medium grained, hard, thin to thick bedded, fossiliferous limestone and dolomite that commonly has chert and solution features. In the areas where the Edwards formation outcrops it is honeycombed and vuggy in places. It is homogenous and few fractures were observed. The undisturbed exposures of Edwards limestone bedrock within SH 45 right-of-way included in this assessment were not found to have evidence of significant pathways for the potential recharge into the Edwards aquifer.

The approximate 2.7 mile long highway alignment is located on an upland that generally slopes and drains to Lake Creek to the southeast.

The Fairlie, Eckrant, Georgetown, and Crawford soil series occur over the alignment. These soils are addressed in the attached Section 2.

No evidence of faults were observed during field reconnaissance and none have been mapped on the alignment. The closest mapped faults are within a quarter of a mile north of it.

Eighteen features were identified along the alignment and are characterized on the Geologic Assessment Table. The first geological assessment completed in February 2000 had twenty-nine features. The number of features have been reduced because of changes in the new alignment being used for this assessment, changes in the criteria for describing features, and changes that have taken place during the past three years in the landscape where the features occur. For this reason, the numbering of the features has breaks in it. A discussion of the potential recharge features found along the alignment and described in the Geologic Assessment Table follow.

Features	Comments
S-5, 9, 18	All of these features are non-karst closed depressions (CD) that are in small drainages that were most likely the result of scour.
S-4, 17	These two CDs maybe the result of man's or animal's activities or scour.
S-6, 20	Feature S-6 is an apparent Monitor Well. Feature S-20 is a water well.

S-7, 8	These CDs were created by the construction of man-made dams along a minor drainage.
S-19	This is a small solution cavity in a limestone bedrock outcrop.
S-21, 22, 23, 24, 25, 26, 27, 28	All of these features are man-made in that they are the result of the placement of fill material over an area. Limestone cobbles and boulders and soils were randomly dumped in the area. Opening have developed in places between tilted rocks and soil has settled between the large limestone rocks, thus creating the openings observed and measured. In some of the openings small animals have dug into them and enlarged them. Most of these features extend horizontally from the openings to unknown depths and dimensions. Some of the fill area is uneven and hummocky. Feature S-21 covers an area approximately 10 feet wide and 60 feet long. In this area there are about 10 separate openings The largest of these openings were measured and described on the Geologic Assessment Table. Feature S-27 is similar to S-21, for it has 12 separate openings that are parallel to the property fence adjacent of FM 620. The openings are within10 feet of the fence and extend about 80 feet northeast from the gate to the property. They range in size from 0.5' wide X 0.5' long X 0.8' deep to 2' wide X 5' long X +/-3' deep.

S. H. 45 / U. S. 183 Interchange

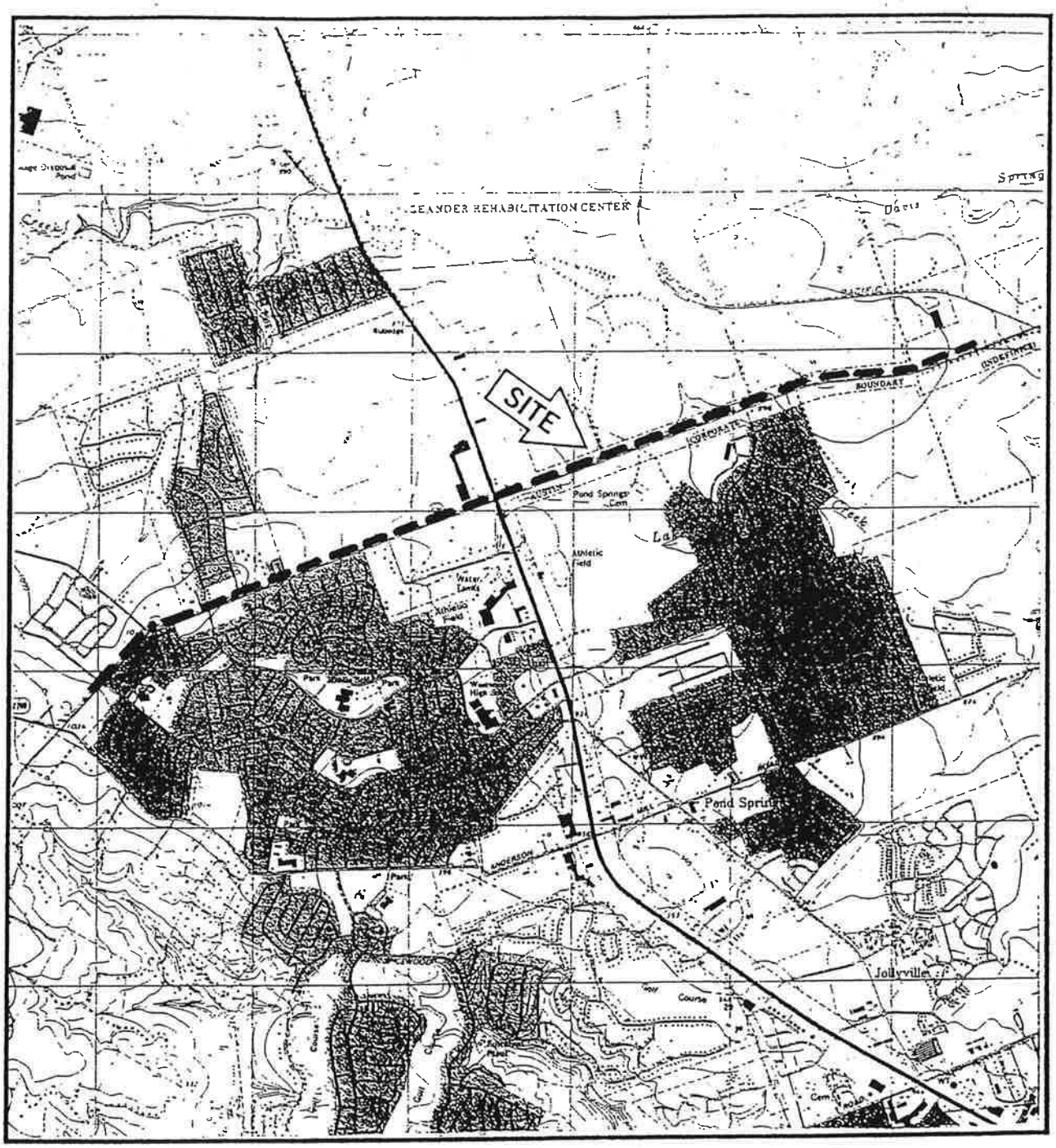

Section 5
LOCATION MAP OF SITE

N

Site Alignment: — — — — —

Scale:
1 inch = 3350 feet

Map Source: USGS 7.5 minute Quadrangle Sheet: Jollyville, Texas, 1987.

S. H. 45 / U. S. 183 Interchange

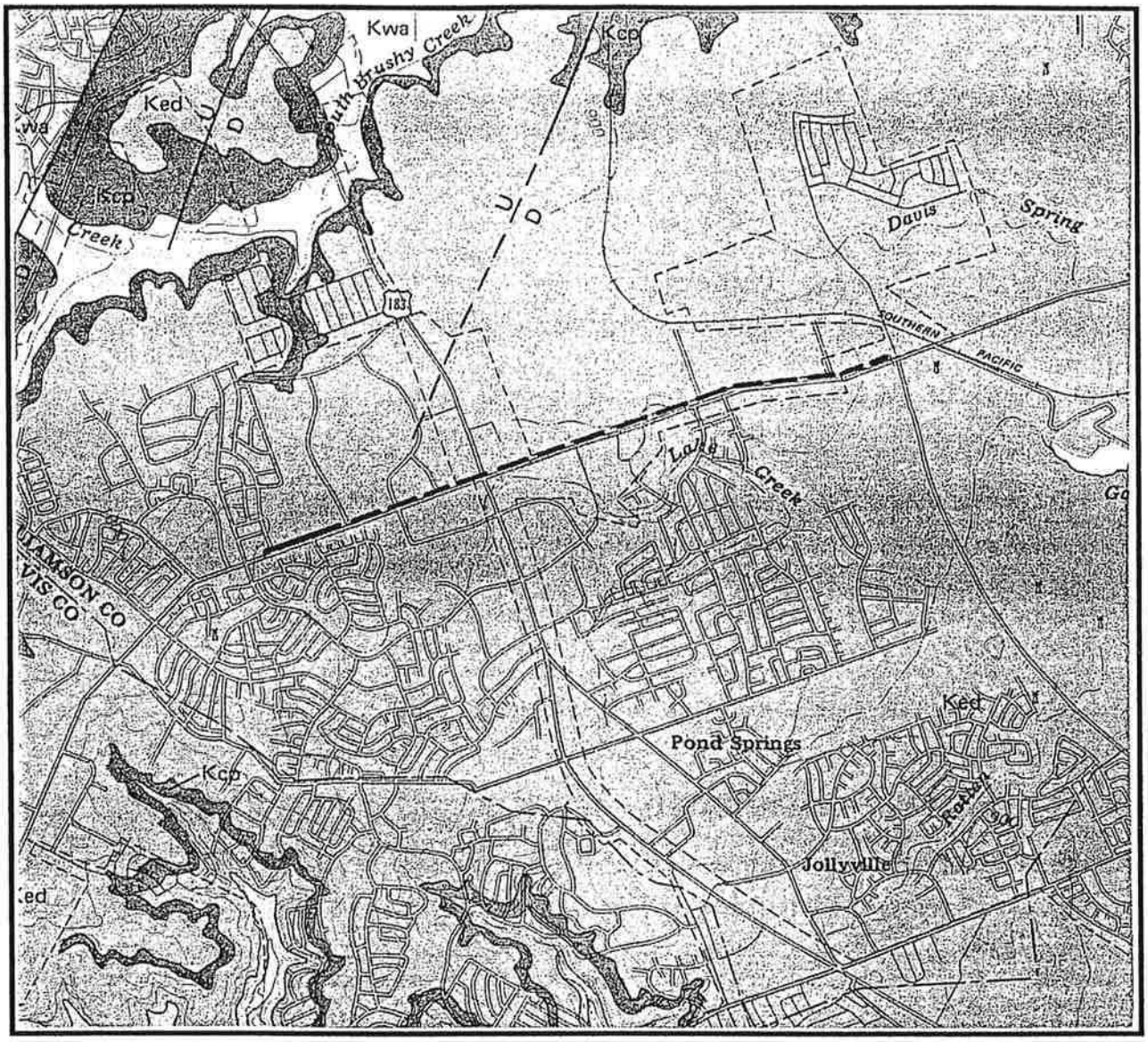

GEOLOGIC MAP OF SITE AREA

Ked	Edwards fm.	Kwa	Walnut fm.
Kcp	Comanche Peak fm.	Kgr	Glen Rose fm.

Site Alignment: ——— ——— ———

Scale:
1 inch = 1 mile

N

Faults: U = upthrown side,
D = downthrown side,
dashed where inferred.

U
D

Map Source: Garner & Young, 1976, "Environmental Geology of the Austin Area: An Aid to Urban Planning," Bureau of Economic Geology Report of Investigations No. 86.

Geologic Assessment
S.H. 45 / U.S. 183 Interchange

Section 11, All Known Wells

X* Reference is made to Section 17, Comments, that describes the four wells identified on site. Feature S-6 is assumed to be a monitor well that looks as though it is not in use. Features S-15, S-16, and S-20 are all water wells that are apparently currently in use. It is not known if they comply with Rules 16TAC §76 or if it will be necessary for them to be plugged.

TNRCC-0584

WATER POLLUTION ABATEMENT PLAN APPLICATION

WATER POLLUTION ABATEMENT PLAN APPLICATION
For Regulated Activities
on the Edwards Aquifer Recharge Zone
and Relating to 30 TAC §213.5(b), effective June 1, 1999

REGULATED ENTITIY NAME: SH 45/US183 Interchange, Parmer Lane to Ridgeline

REGULATED ENTITY INFORMATION

1. The type of project is:
   __ Residential: # of Lots:
   __ Residential: # of Living Unit Equivalents:
   __ Commercial
   __ Industrial
   X Other: *TTA (TXDOT) Highway Project*

2. Total site acreage (size of property): 168

3. Projected population: *N/A*

4. The amount and type of impervious cover expected after construction are shown below:

Impervious Cover of Proposed Project	Sq. Ft.	Sq. Ft./Acre	Acres
Structures/Rooftops	*0*	÷ 43,560 =	*0*
Parking	*0*	÷ 43,560 =	*0*
Other paved surfaces	*4.87×10^6*	÷ 43,560 =	*137*
Total Impervious Cover	*4.87×10^6*	÷ 43,560 =	*137*
Total Impervious Cover ÷ Total Acreage x 100 =			*81.6 %*

5. X **ATTACHMENT A - Factors Affecting Water Quality.** A description of any factors that could affect surface water and groundwater quality is provided ~~at the end of this form~~ below.

   Runoff from this project will be generated from the roadway and ROW areas, and would be consistent with runoff typical of a major urban thoroughfare. The stormwater quality could be affected by the quantity of traffic that uses the road.

6. X Only inert materials as defined by 30 TAC 330.2 will be used as fill material.

FOR ROAD PROJECTS ONLY
Complete questions 7-12 if this application is exclusively for a road project.

7. Type of project:

X TXDOT road project.
__ County road or roads built to county specifications.
__ City thoroughfare or roads to be dedicated to a municipality.
__ Street or road providing access to private driveways.

8. Type of pavement or road surface to be used:

X Concrete
X Asphaltic concrete pavement
__ Other:

9. Length of Right of Way (R.O.W.): *17,150* feet.
Width of R.O.W.: *428 (avg)* feet.
L x W = *7.34x10^6* Ft² ÷ 43,560 Ft²/Acre = *168* acres.

10. Length of pavement area: 17,150 feet.
Width of pavement area: *349 (avg)* feet.
L x W = *6.65x10^6* Ft² ÷ 43,560 Ft²/Acre = *137* acres.
Pavement area *137* acres ÷ R.O.W. area *168* acres x 100 = *81.6* % impervious cover.

11. __ A rest stop will be included in this project.
X A rest stop will **not** be included in this project.

12. X Maintenance and repair of existing roadways that do not require approval from the TCEQ Executive Director. Modifications to existing roadways such as widening roads/adding shoulders totaling more than one-half (1/2) the width of one (1) existing lane require prior approval from the TCEQ.

STORMWATER TO BE GENERATED BY THE PROPOSED PROJECT

13. **ATTACHMENT B - Volume and Character of Stormwater.** A description of the volume and character (quality) of the stormwater runoff which is expected to occur from the proposed project is provided ~~at the end of this form~~ *below*. The estimates of stormwater runoff quality and quantity should be based on area and type of impervious cover. Include the runoff coefficient of the site for both pre-construction and post-construction conditions.

Approximately 20% of stormwater runoff originates from pervious areas and 80% originates from paved areas. The quality of stormwater runoff will be affected by the quantity of traffic that uses SH 45 and is anticipated to be consistent with runoff typical of a major urban thoroughfare. The runoff coefficient for pre-construction is 0.60 and for post-construction is 0.80

WASTEWATER TO BE GENERATED BY THE PROPOSED PROJECT

14. The character and volume of wastewater is shown below:

100 % Domestic	*510* gallons/day
__ % Industrial	*0* gallons/day
__ % Commingled	*0* gallons/day
TOTAL	*510* gallons/day

15. Wastewater will be disposed of by:

__ **On-Site** Sewage Facility (OSSF/Septic Tank):

ATTACHMENT C - Suitability Letter from Authorized Agent. An on-site sewage facility will be used to treat and dispose of the wastewater. The appropriate licensing authority's (authorized agent) written approval is provided at the end of this form. It states that the land is suitable for the use of an on-site sewage facility or identifies areas that are not suitable.

__ Each lot in this project/development is at least one (1) acre (43,560 square feet) in size. The system will be designed by a licensed professional engineer or registered sanitarian and installed by a licensed installer in compliance with 30 TAC §285.

X Sewage Collection System (Sewer Lines):

X Private service laterals from the wastewater generating facilities will be connected to an existing SCS.

__ Private service laterals from the wastewater generating facilities will be connected to a proposed SCS.

__ The SCS was previously submitted on _____.

__ The SCS was submitted with this application.

__ The SCS will be submitted at a later date. The owner is aware that the SCS may not be installed prior to executive director approval.

The sewage collection system will convey the wastewater to the ~~(name)~~ *City of Austin Walnut Creek Wastewater treatment plant*. The treatment facility is:

X existing.

__ proposed.

16. X All private service laterals will be inspected as required in 30 TAC 213.5.

SITE PLAN REQUIREMENTS

Items 17 through 27 must be included on the Site Plan.

17. The Site Plan must have a minimum scale of 1" = 400'.
Site Plan Scale: 1" = *100* '.
Site Plan included in Chapter 7.

18. 100-year floodplain boundaries

X Some part(s) of the project site is located within the 100-year floodplain. The floodplain is shown and labeled *on Site Plans included in Chapter 7.* .

__ No part of the project site is located within the 100-year floodplain.

The 100-year floodplain boundaries are based on the following specific (including date of material) sources(s):
FEMA, January 3, 1997, Flood Insurance Rate Map for Williamson County, Texas, Map No. 48491C0325D

19. X The layout of the development is shown with existing and finished contours at appropriate, but not greater than ten-foot contour intervals. Show lots, recreation centers, buildings, roads, etc.

__ The layout of the development is shown with existing contours. Finished topographic contours will not differ from the existing topographic configuration and are not shown.

20. All known wells (oil, water, unplugged, capped and/or abandoned, test holes, etc.):

X There are 2 (#) wells present on the project site and the locations are shown and labeled. (Check all of the following that apply)

__ The wells are not in use and have been properly abandoned.

X The wells are not in use and will be properly abandoned.

__ The wells are in use and comply with 30 TAC §238.

__ There are no wells or test holes of any kind known to exist on the project site.

21. Geologic or manmade features which are on the site:

X All **sensitive and possibly sensitive** geologic or manmade features identified in the Geologic Assessment are shown and labeled *on the Site Plans included in Chapter 7.*

__ No **sensitive and possibly sensitive** geologic or manmade features were identified in the Geologic Assessment.

__ **ATTACHMENT D - Exception to the Required Geologic Assessment.** An exception to the Geologic Assessment requirement is requested and explained in ATTACHMENT D provided at the end of this form. Geologic or manmade features were found and are shown and labeled.

__ **ATTACHMENT D - Exception to the Required Geologic Assessment.** An exception to the Geologic Assessment requirement is requested and explained in ATTACHMENT D provided at the end of this form. No geologic or manmade features were found.

22. X The drainage patterns and approximate slopes anticipated after major grading activities.

23. X Areas of soil disturbance and areas which will not be disturbed.
Note: All area within the ROW will be disturbed.

24. X Locations of major structural and nonstructural controls. These are the temporary and permanent best management practices. *(See Site Plans in Chapter 7).*

25. X Locations where soil stabilization practices are expected to occur. *(See Site Plans in Chapter 7).*

26. X Surface waters (including wetlands).

27. X Locations where stormwater discharges to surface water or sensitive features.

__ There will be no discharges to surface water or sensitive features.

ADMINISTRATIVE INFORMATION

28. X One (1) original and three (3) copies of the completed application have been provided.

29. X Any modification of this WPAP will require TCEQ executive director approval, prior to construction, and may require submission of a revised application, with appropriate fees.

To the best of my knowledge, the responses to this form accurately reflect all information requested concerning the proposed regulated activities and methods to protect the Edwards Aquifer. This **WATER POLLUTION ABATEMENT PLAN APPLICATION FORM** is hereby submitted for TCEQ review and executive director approval. The form was prepared by:

Print Name of Applicant/Owner/Agent

4-18-03

Crespo Consulting Services, Inc. Date
L. Stephen Stecher, P.E., #55645

Texas Natural Resource Conservation Commission
Water Pollution Abatement Plan
General Construction Notes

1. Written construction notification must be given to the appropriate TNRCC regional office no later than 48 hours prior to commencement of the regulated activity. Information must include the date on which the regulated activity will commence, the name of the approved plan for the regulated activity, and the name of the prime contractor and the name and telephone number of the contact person.

2. All contractors conducting regulated activities associated with this project must be provided with complete copies of the approved Water Pollution Abatement Plan and the TNRCC letter indicating the specific conditions of its approval. During the course of these regulated activities, the contractors are required to keep on-site copies of the approved plan and approval letter.

3. If any sensitive feature is discovered during construction, all regulated activities near the sensitive feature must be suspended immediately. The appropriate TNRCC regional office must be immediately notified of any sensitive features encountered during construction. The regulated activities near the sensitive feature may not proceed until the TNRCC has reviewed and approved the methods proposed to protect the sensitive feature and the Edwards Aquifer from any potentially adverse impacts to water quality.

4. No temporary aboveground hydrocarbon and hazardous substance storage tank system is installed within 150 feet of a domestic, industrial, irrigation, or public water supply well, or other sensitive feature.

5. Prior to commencement of construction, all temporary erosion and sedimentation (E&S) control measures must be properly selected, installed, and maintained in accordance with the manufacturers specifications and good engineering practices. Controls specified in the temporary storm water section of the approved Edwards Aquifer Protection Plan are required during construction. If inspections indicate a control has been used inappropriately, or incorrectly, the applicant must replace or modify the control for site situations. The controls must remain in place until disturbed areas are revegetated and the areas have become permanently stabilized.

6. If sediment escapes the construction site, off-site accumulations of sediment must be removed at a frequency sufficient to minimize offsite impacts to water quality (e.g., fugitive sediment in street being washed into surface streams or sensitive features by the next rain).

7. Sediment must be removed from sediment traps or sedimentation ponds not later than when design capacity has been reduced by 50%. A permanent stake must be provided that can indicate when the sediment occupies 50% of the basin volume.

8. Litter, construction debris, and construction chemicals exposed to stormwater shall be prevented from becoming a pollutant source for stormwater discharges (e.g., screening outfalls, picked up daily).

9. All spoils (excavated material) generated from the project site must be stored on-site with proper E&S controls. For storage or disposal of spoils at another site on the Edwards Aquifer Recharge Zone, the owner of the site must receive approval of a water pollution abatement plan for the placement of fill material or mass grading prior to the placement of spoils at the other site.

10. Stabilization measures shall be initiated as soon as practicable in portions of the site where

construction activities have temporarily or permanently ceased, but in no case more than 14 days after the construction activity in that portion of the site has temporarily or permanently ceased. Where the initiation of stabilization measures by the 14th day after construction activity temporary or permanently cease is precluded by weather conditions, stabilization measures shall be initiated as soon as practicable. Where construction activity on a portion of the site is temporarily ceased, and earth disturbing activities will be resumed within 21 days, temporary stabilization measures do not have to be initiated on that portion of site. In areas experiencing droughts where the initiation of stabilization measures by the 14th day after construction activity has temporarily or permanently ceased is precluded by seasonal arid conditions, stabilization measures shall be initiated as soon as practicable.

11. The following records shall be maintained and made available to the TNRCC upon request: the dates when major grading activities occur; the dates when construction activities temporarily or permanently cease on a portion of the site; and the dates when stabilization measures are initiated.

12. The holder of any approved Edward Aquifer protection plan must notify the appropriate regional office in writing and obtain approval from the executive director prior to initiating any of the following:

A. any physical or operational modification of any water pollution abatement structure(s), including but not limited to ponds, dams, berms, sewage treatment plants, and diversionary structures;

B. any change in the nature or character of the regulated activity from that which was originally approved or a change which would significantly impact the ability of the plan to prevent pollution of the Edwards Aquifer;

C. any development of land previously identified as undeveloped in the original water pollution abatement plan.

Austin Regional Office 1921 Cedar Bend, Suite 150 Austin, Texas 78758-5336 Phone (512) 339-2929 Fax (512) 339-3795	San Antonio Regional Office 14250 Judson Road San Antonio, Texas 78233-4480 Phone (210) 490-3096 Fax (210) 545-4329

THESE GENERAL CONSTRUCTION NOTES MUST BE INCLUDED ON THE CONSTRUCTION PLANS PROVIDED TO THE CONTRACTOR AND ALL SUBCONTRACTORS.

TNRCC-0602

TEMPORARY STORMWATER SECTION

Temporary Stormwater Section
for Regulated Activities
on the Edwards Aquifer Recharge Zone
and Relating to 30 TAC §213.5(b)(4)(A), (B), (D)(i) and (G); Effective June 1, 1999

REGULATED ENTITY NAME: *SH45/US183 Interchange, Parmer Lane to Ridgeline*

POTENTIAL SOURCES OF CONTAMINATION

Examples: Fuel storage and use, chemical storage and use, use of asphaltic products, construction vehicles tracking onto public roads, and existing solid waste.

1. Fuels for construction equipment and hazardous substances which will be used during construction:

__ Aboveground storage tanks with a cumulative storage capacity of less that 250 gallons will be stored on the site for less than one (1) year.

X Aboveground storage tanks with a cumulative storage capacity between 250 gallons and 499 gallons will be stored on the site for less than one (1) year *(see detail).*

__ Above ground storage tanks with a cumulative storage capacity of 500 gallons or more will be stored on the site. An **Aboveground Storage Tank Facility Plan** application must be submitted to the appropriate regional office of the TNRCC prior to moving the tanks onto the project.

__ Fuels and hazardous substances will not be stored on-site.

2. X **ATTACHMENT A - Spill Response Actions**. A description of the measures to be taken to contain any spill of hydrocarbons or hazardous substances is provided ~~at the end of this form.~~ *below:*

The construction general contractor will be responsible for the proper containment, cleanup, and disposal of any spills of hydrocarbons or hazardous substances. Spills will be cleaned up with solvents and disposed of properly. Any reportable quantity of hazardous material release will be reported to National Response Center (1-800-424-8802) and TCEQ at 1-800-255-3924.

3. N/A Temporary aboveground storage tank systems of 250 gallons or more cumulative storage capacity must be located a minimum horizontal distance of 150 feet from any domestic, industrial, irrigation, or public water supply well, or other sensitive feature.

4. X **ATTACHMENT B - Potential Sources of Contamination.** Described below are ~~Describe in an attachment at the end of this form~~ any other activities or processes which may be a potential source of contamination.

Other activities or processes which may be a potential source of contamination primarily involve normal vehicular traffic which generates a variety of potential contaminants typically represented by nonpoint source pollution in urban runoff. These may include:

- *Total suspended solids*
- *Metals*
- *Petroleum related organic compounds*
- *Nutrients*
- *Trash and litter*

Many of the potential contaminants are related to normal vehicle wear, minor oil and gasoline leaks, and vehicle emission.

Another potential source of contamination is related to large leaks or spills related to accidents or malfunction of a vehicle. These potential contaminants include gasoline, diesel, oil, and many other liquid and dry chemical products. The potential for sources of contaminants due to spills and major leaks is similar to that of other highways and major roadways.

__ There are no other potential sources of contamination.

SEQUENCE OF CONSTRUCTION

5. X **ATTACHMENT C - Sequence of Major Activities.** A description of the sequence of major activities which will disturb soils for major portions of the site (grubbing, excavation, grading, utilities, and infrastructure installation) is provided ~~at the end of this form~~ *below.* For each activity described, an estimate of the total area of the site to be disturbed by each activity is given.

The construction general contractor will be ultimately responsible for the sequence of construction for this project. However, it is anticipated that the general sequence will be:

- *Clearing and grubbing of vegetation in construction areas*
- *Utility relocation/adjustment*
- *Excavation, filling, and final grading*
- *Drainage*
- *Roadway construction*
- *Toll booth construction and associated utilities*
- *Striping/pavement marking*
- *Site cleanup*
- *Revegetation of disturbed areas*

It is anticipated that virtually all of the ROW area will be disturbed by construction activities during the project. The total disturbed acreage equals 168. Appropriately sized erosion and sediment control measures will be utilized for these areas until vegetation is re-established.

6. X Name the receiving water(s) at or near the site which will be disturbed or which will receive discharges from disturbed areas of the project: *Lake Creek*

TEMPORARY BEST MANAGEMENT PRACTICES (TBMPs)

Erosion control examples: tree protection, interceptor swales, level spreaders, outlet stabilization, blankets or matting, mulch, and sod. Sediment control examples: stabilized construction exit, silt fence, filter dikes, rock berms, buffer strips, sediment traps, and sediment basins. Please refer to the Technical Guidance Manual for guidelines and specifications. **All structural BMPs must be shown on the site plan.** *(See attached Erosion and Sedimentation Control Plan drawings.)*

7. X **ATTACHMENT D - Temporary Best Management Practices and Measures.** A

description of the TBMPs and measures that will be used during and after construction are provided ~~at the end of this form~~ *below.* For each activity listed in the sequence of construction, include appropriate control measures and the general timing (or sequence) during the construction process that the measures will be implemented.

Silt fences and rock berms will be placed prior to construction and will be maintained throughout the project. Blankets and matting will also be placed in selected areas during construction after grading has been completed.

_X_ TBMPs and measures will prevent pollution of surface water, groundwater, and stormwater. The construction-phase BMPs for erosion and sediment controls have been designed to retain sediment on site to the extent practicable. The following information has been provided ~~in the attachment at the end of this form~~ *below.*

a. A description of how BMPs and measures will prevent pollution of surface water, groundwater or stormwater that originates upgradient from the site and flows across the site.

Upgradient flow will be intercepted by swales and conveyed to existing culverts or streams prior to flowing across the site or commingling with site runoff.

b. A description of how BMPs and measures will prevent pollution of surface water or groundwater that originates on-site or flows off site, including pollution caused by contaminated stormwater runoff from the site.

Most flows originating on site will be filtered through silt fences or rock berms prior to flowing off site. Flows from larger drainage areas will be routed through sediment traps or basins prior to discharge.

c. A description of how BMPs and measures will prevent pollutants from entering surface streams, sensitive features, or the aquifer.

Silt fences, rock berms, and sediment traps/basins will be placed at locations for runoff prior to discharge to surface streams. No sensitive features with significant pathways to the Edwards Aquifer were discovered in the Geologic Assessment. Closed depressions that were identified will be filled.

d. A description of how, to the maximum extent practicable, BMPs and measures will maintain flow to naturally-occurring sensitive features identified in either the geologic assessment, TNRCC inspections, or during excavation, blasting, or construction.

No naturally occurring sensitive features with significant pathways to the Edwards Aquifer were discovered in the Geologic Assessment.

8. The temporary sealing of a naturally-occurring sensitive feature which accepts recharge to the Edwards Aquifer as a temporary pollution abatement measure during active construction should be avoided.

_X_ **ATTACHMENT E - Request to Temporarily Seal a Feature.** A request to temporarily seal a feature is provided ~~at the end of this form~~ *below.* The request includes justification

as to why no reasonable and practicable alternative exists for each feature.

__ There will be no temporary sealing of naturally-occurring sensitive features on the site.

There are no significant features, as stated above. Virtually the entire ROW will be graded, except at the ends, and almost all features will be under the pavement. Features are proposed to be filled. Wells will be plugged and abandoned.

9. X **ATTACHMENT F - Structural Practices.** Describe the structural practices that will be used to divert flows away from exposed soils, to store flows, or to otherwise limit runoff discharge of pollutants from exposed areas of the site. Placement of structural practices in floodplains has been avoided.

Interceptor swales will be constructed to divert upgradient flows away from exposed soils. Runoff from disturbed areas will be treated using silt fences, rock berms, or sediment traps/basins as appropriate. Structural practices will not be placed in floodplains.

10. X **ATTACHMENT G - Drainage Area Map**. A drainage area map is provided at the end of this form to support the following requirements.

__ For areas that will have more than 10 acres within a common drainage area disturbed at one time, a sediment basin will be provided.

__ For areas that will have more than 10 acres within a common drainage area disturbed at one time, a smaller sediment basin and/or sediment trap(s) will be used.

__ For areas that will have more than 10 acres within a common drainage area disturbed at one time, a sediment basin or other equivalent controls are not attainable, but other TBMPs and measures will be used in combination to protect down slope and side slope boundaries of the construction area.

X There are no areas greater than 10 acres within a common drainage area that will be disturbed at one time. A smaller sediment basin and/or sediment trap(s) will be used in combination with other erosion and sediment controls within each disturbed drainage area.

Because of the linear nature of the highway project, it is unlikely that a common drainage area of more than 10 acres will be disturbed at one time. Therefore, it is anticipated that silt fences, rock berms, and small sediment traps/basins will provide adequate control.

11. X **ATTACHMENT H - Temporary Sediment Pond(s) Plans and Calculations.** Temporary sediment pond or basin construction plans and design calculations for a proposed temporary BMP or measure has been prepared by or under the direct supervision of a Texas Licensed Professional Engineer. All construction plans and design information must be signed, sealed, and dated by the Texas Licensed Professional Engineer. Construction plans for the proposed temporary BMPs and measures are provided as at the end of this form.

Termporary sediment basins are designed at the location of each permanent control. Locations of the temporary measures are shown on the Site Plan. A detail of the temporary outlets for the permanent sedimentation/filtration pond sites is included with the Site Plan . A standard detail for such a sediment basin is also included for reference

purposes.

12. X **ATTACHMENT I - Inspection and Maintenance for BMPs.** A plan for the inspection of temporary BMPs and measures and for their timely maintenance, repair, and, if necessary, retrofit is provided at the end of this form. A description of documentation procedures and recordkeeping practices is included in the plan.

13. X All control measures must be properly selected, installed, and maintained in accordance with the manufacturers specifications and good engineering practices. If periodic inspections by the applicant or the executive director, or other information indicate a control has been used inappropriately, or incorrectly, the applicant must replace or modify the control for site situations.

14. X If sediment escapes the construction site, off-site accumulations of sediment must be removed at a frequency sufficient to minimize offsite impacts to water quality (e.g., fugitive sediment in street being washed into surface streams or sensitive features by the next rain).

15. X Sediment must be removed from sediment traps or sedimentation ponds not later than when design capacity has been reduced by 50%. A permanent stake will be provided that can indicate when the sediment occupies 50% of the basin volume.

The stake is required as shown in Note 8 of the Water Pollution Abatement Plan General Construction Notes as included in the construction plans. These notes are also included with the Site Plans in the Chapter 7 attachment.

16. X Litter, construction debris, and construction chemicals exposed to stormwater shall be prevented from becoming a pollutant source for stormwater discharges (e.g., screening outfalls, picked up daily).

SOIL STABILIZATION PRACTICES

Examples: establishment of temporary vegetation, establishment of permanent vegetation, mulching, geotextiles, sod stabilization, vegetative buffer strips, protection of trees, or preservation of mature vegetation.

17. X **ATTACHMENT J - Schedule of Interim and Permanent Soil Stabilization Practices.** A schedule of the interim and permanent soil stabilization practices for the site is ~~attached at the end of this form~~ *included below.*

Following grading activities, the general contractor will be required to install soil stabilization practices such as blankets and matting in swales and other sloped areas subject to erosion. See Erosion and Sedimentation Control Plan.

18. X Records must be kept at the site of the dates when major grading activities occur, the dates when construction activities temporarily or permanently cease on a portion of the site, and the dates when stabilization measures are initiated.

19. X Stabilization practices must be initiated as soon as practicable where construction activities have temporarily or permanently ceased.

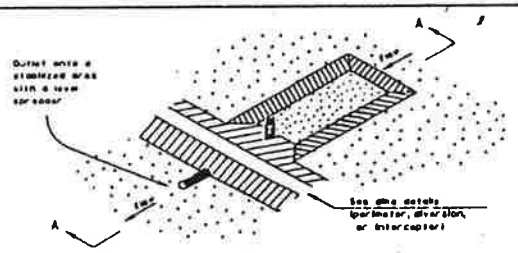

SEDIMENT BASIN AND/OR TRAP WITH PIPE OUTLET

(ST/PO)

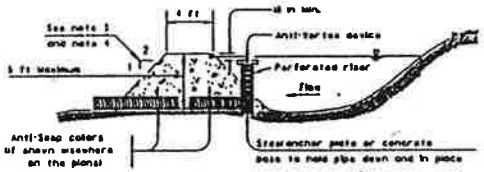

SECTION A-A

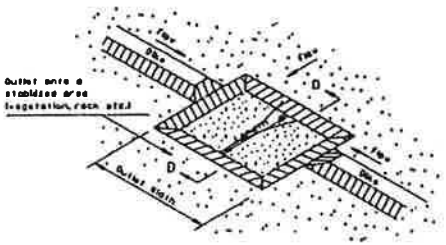

SEDIMENT TRAP WITH LEVEL STABILIZED OUTLET

(ST)

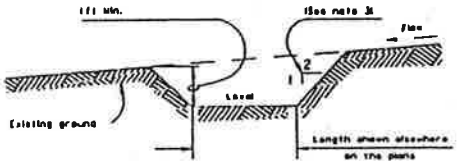

SECTION D-D

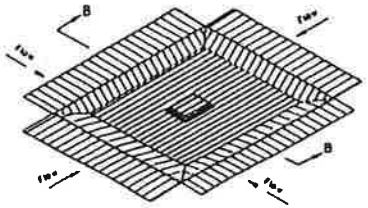

DROP INLET SEDIMENT TRAP

(ST-DI)

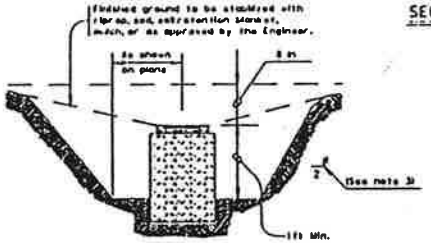

SECTION B-B

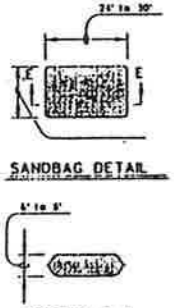

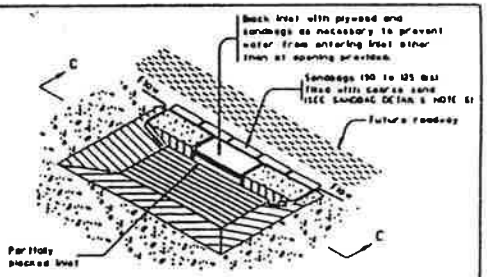

CURB INLET SEDIMENT TRAP

(ST-CI)

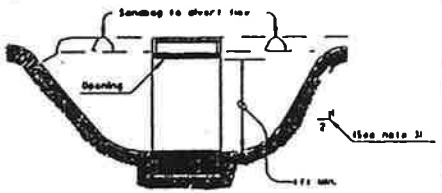

SECTION C-C

PLANS SHEET LEGEND

(ST/PO)
SEDIMENT BASIN AND/OR TRAP WITH PIPE OUTLET
(ST-DI)
DROP INLET SEDIMENT TRAP
(ST-CI)
CURB INLET SEDIMENT TRAP
(ST)
SEDIMENT TRAP WITH LEVEL STABILIZED OUTLET

SEDIMENT BASIN & TRAP USAGE GUIDELINES

A sediment basin and/or trap may be used to precipitate sediment out of runoff draining from an unstabilized area.

Basins: The drainage area for a sediment basin should not exceed 100 acres. The basin capacity should be at least 1800 CF/acre of drainage area (0.5" over the drainage area). If the disturbed area draining to the basin is larger than 10 acres, the basin capacity should be 3600 CF/acre (1.0" over the drainage area).

The basin should have a 10 hour draw-down time with an emergency spillway. The spillway may be designed to pass the peak rate of runoff from a 25 year frequency storm. The 100 year storm should be investigated to consider possible flooding impacts.

The entrance into the basin should be protected from erosion. The basin should be cleaned when the capacity has been reduced by 1/3.

Traps: The drainage area for a sediment trap should not exceed 5 acres. The trap capacity should be 1800 CF/acre (0.5" over the drainage area).

Sediment traps should be placed in the following locations:
1. Within drainage ditches spaced a 500' on center
2. Immediately preceding ditch inlets
3. Just before the drainage enters a water course
4. Just before the drainage leaves the right of way

The trap outlet may either be through a perforated riser and pipe assembly designed to achieve a 10 hour draw-down time or over a level stabilized area (vegetation, rock, etc.).

The trap should be cleaned when the capacity has been reduced by 1/3 or the sediment has accumulated to a depth of 1', whichever is less.

GENERAL NOTES

1. Pipe outlet material and criteria to be Item "Pipe Underdrains" or as accepted by the Engineer.
2. Duplex connections shall be watertight.
3. Side slopes within the safety clear zone of a roadway shall be 6:1 or flatter. Protect the traveling public from inlet attacks within the clear zone.
4. Sediment basins shall have side slopes of 3:1 or flatter.
5. The dimensions and limits of excavation for sediment basins and traps shall be as shown elsewhere on the plans.
6. THE SANDBAG MATERIAL SHALL BE MADE OF POLYPROPYLENE, POLYETHYLENE OR POLYAMIDE WOVEN FABRIC, MIN. UNIT WEIGHT 4 OUNCES/SY, MINIMUM BURST STRENGTH EXCEEDING 300 PSI AND ULTRAVIOLET STABILITY EXCEEDING 70%.
7. THE GUIDELINES SHOWN HEREON ARE SUGGESTIONS ONLY AND MAY BE MODIFIED BY THE ENGINEER.

Texas Department of Transportation
Design Division (Roadway)

TEMPORARY EROSION, SEDIMENT AND WATER POLLUTION CONTROL MEASURES

SEDIMENT BASINS AND TRAPS (EARTHWORK FOR EROSION CONTROL)

EC(6)-93

ATTACHMENT H

Temporary Stormwater Section
S. H. 45 / U. S. 183 Interchange

Attachment I – Inspection and Maintenance for Temporary BMPs

A designated person must perform visual inspections of disturbed areas that have not been stabilized, areas used for storage of exposed materials, construction entrances, storm water control systems, and BMPs at least once every 14 days and within 24 hours of the end of a storm event of 0.5 inches or greater. Areas that have been finally or temporarily stabilized must be inspected at least once per month. Inspections must be performed by qualified personnel and be documented and retained as part of the WPAP. A copy of the inspection report form follows this page.

All areas exposed to precipitation must be visually inspected for evidence of potential pollutants entering the drainage system. Sediment and erosion controls must be evaluated to determine whether they are adequate and operating properly or whether additional control measures are needed. Structural controls with excess siltation (over 6 inches deep) should be cleaned out. Construction entrances must be inspected for evidence of offsite sediment tracking.

If an inspection shows any deficiencies, or that additional controls or modified BMPs are needed to correct problems identified, they must be corrected within seven (7) calendar days following the inspection, or prior to the next anticipated storm event if practicable.

TNRCC-0600

PERMANENT STORMWATER SECTION

Permanent Stormwater Section
for Regulated Activities
on the Edwards Aquifer Recharge Zone
and Relating to 30 TAC §213.5(b)(4)(C), (D)(ii), (E), and (5), Effective June 1,1999

REGULATED ENTITY NAME: *SH45/US183 Interchange, Parmer Lane to Ridgeline*
Permanent best management practices (BMPs) and measures that will be used during and after construction is completed.

1. X Permanent BMPs and measures must be implemented to control the discharge of pollution from regulated activities after the completion of construction.

2. X These practices and measures have been designed, and will be constructed, operated, and maintained to insure that 80% of the incremental increase in the annual mass loading of total suspended solids (TSS) from the site caused by the regulated activity is removed. These quantities have been calculated in accordance with technical guidance prepared or accepted by the executive director.

   X The TCEQ Technical Guidance Manual (TGM) was used to design permanent BMPs and measures for this site.

   — A technical guidance other than the TCEQ TGM was used to design permanent BMPs and measures for this site. The complete citation for the technical guidance that was used is provided below

3. X Owners must insure that permanent BMPs and measures are constructed and function as designed. A Texas Licensed Professional Engineer must certify in writing that the permanent BMPs or measures were constructed as designed. The certification letter must be submitted to the appropriate regional office within 30 days of site completion.

4. X Where a site is used for low density single-family residential development and has 20 % or less impervious cover, other permanent BMPs are not required. This exemption from permanent BMPs must be recorded in the county deed records, with a notice that if the percent impervious cover increases above 20% or land use changes, the exemption for the whole site as described in the property boundaries required by 30 TAC §213.4(g) (relating to Application Processing and Approval), may no longer apply and the property owner must notify the appropriate regional office of these changes.

   — This site will be used for low density single-family residential development and has 20% or less impervious cover.

   — This site will be used for low density single-family residential development but has more than 20% impervious cover.

   X This site will not be used for low density single-family residential development.

5. X The executive director may waive the requirement for other permanent BMPs for multi-family residential developments, schools, or small business sites where 20% or less impervious cover is used at the site. This exemption from permanent BMPs must be

recorded in the county deed records, with a notice that if the percent impervious cover increases above 20% or land use changes, the exemption for the whole site as described in the property boundaries required by 30 TAC §213.4(g) (relating to Application Processing and Approval), may no longer apply and the property owner must notify the appropriate regional office of these changes.

— **ATTACHMENT A - 20% or Less Impervious Cover Waiver.** This site will be used for multi-family residential developments, schools, or small business sites and has 20% or less impervious cover. A request to waive the requirements for other permanent BMPs and measures is found at the end of this form.

— This site will be used for multi-family residential developments, schools, or small business sites but has more than 20% impervious cover.

X This site will not be used for multi-family residential developments, schools, or small business sites.

6. **ATTACHMENT B - BMPs for Upgradient Stormwater.**

— A description of the BMPs and measures that will be used to prevent pollution of surface water, groundwater, or stormwater that originates upgradient from the site and flows across the site is identified as **ATTACHMENT B** at the end of this form.

— If no surface water, groundwater or stormwater originates upgradient from the site and flows across the site, an explanation is provided as **ATTACHMENT B** at the end of this form.

X If permanent BMPs or measures are not required to prevent pollution of surface water, groundwater, or stormwater that originates upgradient from the site and flows across the site, an explanation is provided ~~as **ATTACHMENT B** at the end of this form~~ *below.*

Upgradient flow will be intercepted by grass-lined swales, conveyed to a stream channel or low point, and transported under the roadway through culverts or bridges to Lake Creek. North Branch Lake Creek will be allowed to pass under the roadway via a 2000-ft bridge.

7. **ATTACHMENT C - BMPs for On-site Stormwater.**

X A description of the BMPs and measures that will be used to prevent pollution of surface water or groundwater that originates on-site or flows off the site, including pollution caused by contaminated stormwater runoff from the site is ~~identified as **ATTACHMENT C** at the end of this form~~ *described below.*

— If permanent BMPs or measures are not required to prevent pollution of surface water or groundwater that originates on-site or flows off the site, including pollution caused by contaminated stormwater runoff, an explanation is provided as **ATTACHMENT C** at the end of this form.

Sedimentation/filtration and extended detention systems have been designed using the TCEQ Technical Guidance on BMPs to meet an overall removal of 80% of the increased TSS pollutant load for the entire project. BMP calculations and Pollutant Loading calculations can be found in **ATTACHMENT C**.

The overall removal includes consideration of the net effectiveness of the sedimentation/filtration ponds designed as part of the US 183 improvements and Section 7 of SH45.

All highway runoff areas are captured and treated. For the five small extended detention ponds, a hazardous material trap has been incorporated in each pond design such that a 10,000 gallon spill could be contained.

8. X **ATTACHMENT D - BMPs for Surface Streams.** A description of the BMPs and measures that prevent pollutants from entering surface streams, sensitive features, or the aquifer is provided at the end of this form. Each feature identified in the Geologic Assessment as "sensitive" or "possibly sensitive" has been addressed.

Sand filter systems have been designed using the TCEQ Technical Guidance on BMPs to remove a minimum of 80% of the increased TSS pollutant load. All features identified in the Geologic Assessment will be permanently filled (wells will be plugged and abandoned).

9. X The applicant understands that to the extent practicable, BMPs and measures must maintain flow to naturally occurring sensitive features identified in either the geologic assessment, executive director review, or during excavation, blasting, or construction.

— The permanent sealing of or diversion of flow from a naturally-occurring "sensitive" or "possibly sensitive" feature that accepts recharge to the Edwards Aquifer as a permanent pollution abatement measure has not been proposed for any naturally-occurring "sensitive" or "possibly sensitive" features on this site.

X **ATTACHMENT E - Request to Seal Features.** A request to seal a naturally-occurring "sensitive" or "possibly sensitive" feature, that includes a justification as to why no reasonable and practicable alternative exists, is found ~~at the end of this form~~ *below.* A request and justification has been provided for each feature.

There are no naturally occurring "sensitive" features. Features S-1, S-5, S-9, S-10, S-12, and S-13 are "possibly sensitive". They do not likely provide any significant recharge to the Edwards Aquifer (see Geologic Assessment). These features are in the area that will be disturbed and paved and it is requested that they be allowed to be filled.

10. X **ATTACHMENT F - Construction Plans.** Construction plans and design calculations for the proposed permanent BMPs and measures have been prepared by or under the direct supervision of a Texas Licensed Professional Engineer. All construction plans and design information have been signed, sealed, and dated by the Texas Licensed Professional Engineer. Construction plans for the proposed permanent BMPs and measures are provided at the end of this form. Design Calculations, TCEQ Construction Notes, all man-made or naturally occurring geologic features, all proposed structural measures, and appropriate details must be shown on the construction plans.

11. X **ATTACHMENT G - Inspection, Maintenance, Repair and Retrofit Plan.** A plan for the inspection, maintenance, repair, and, if necessary, retrofit of the permanent BMPs and measures is provided at the end of this form *(TXDOT I & M Program).* The plan has been prepared and certified by the engineer designing the permanent BMPs and measures. The plan has been signed by the owner or responsible party. The plan includes procedures for documenting inspections, maintenance, repairs, and, if necessary, retrofits as well as a discussion of record keeping procedures.

12. X The TCEQ Technical Guidance Manual (TGM) was used to design permanent BMPs and measures for this site.

__ Pilot-scale field testing (including water quality monitoring) may be required for BMPs that are not contained in technical guidance recognized by or prepared by the executive director.

__ **ATTACHMENT H - Pilot-Scale Field Testing Plan.** A plan for pilot-scale field testing is provided at the end of this form.

13. X **ATTACHMENT I - Measures for Minimizing Surface Stream Contamination.** A description of the measures that will be used to avoid or minimize surface stream contamination and changes in the way in which water enters a stream as a result of the construction and development is provided ~~at the end of this form~~ *below.* The measures address increased stream flashing, the creation of stronger flows and in-stream velocities, and other in-stream effects caused by the regulated activities which increase erosion that results in water quality degradation.

Sedimentation/sand filter ponds will be used to minimize surface stream contamination. These ponds will also help decrease peak flows and velocities. However, because of the size of this project, it is possible that peak flows or velocities could be increased in some areas during large storms. Since the past peak flow velocities for the many drainage paths within this project are unknown, the amount of increase, if any, is uncertain.

Responsibility for maintenance of permanent BMPs and measures after construction is complete.

14. X The applicant is responsible for maintaining the permanent BMPs after construction until such time as the maintenance obligation is either assumed in writing by another entity having ownership or control of the property (such as without limitation, an owner's association, a new property owner or lessee, a district, or municipality) or the ownership of the property is transferred to the entity. Such entity shall then be responsible for maintenance until another entity assumes such obligations in writing or ownership is transferred.

15. X A copy of the transfer of responsibility must be filed with the executive director at the appropriate regional office within 30 days of the transfer if the site is for use as a multiple single-family residential development, a multi-family residential development, or a non-residential development such as commercial, industrial, institutional, schools, and other sites where regulated activities occur.

To the best of my knowledge, the responses to this form accurately reflect all information requested concerning the proposed regulated activities and methods to protect the Edwards Aquifer. This **PERMANENT STORMWATER SECTION** is hereby submitted for TCEQ review and executive director approval. The application was prepared by:

Print Name of Applicant/Owner/Agent

L. Stephen Stecher 4-18-03

Crespo Consulting Services, Inc. Date

L. Stephen Stecher, P.E., #55645

ATTACHMENT C

Pollutant Loading and BMP Calculations

SH45/US183 Interchange
Water Pollution Abatement Plan

Form 0600, Attachment C
Water Quality Pond Drainage Area, Type and Volume

April 18, 2003

Drainage Area #	Drainage Area (Acres)	Existing Impervious Cover %	Proposed Impervious Cover %	Uncaptured Area (Acres)	Treated Area (Acres)	Pond Type	BMP Volume (In.)	Base Volume (Cu. Ft.)	Total Volume (Cu. Ft.)
Line B & C Pond	55.70	42.8	86.5	0.00	55.70	ED On-Line	1.34	271,528	325,834
N. Branch WQ Pond - West	33.40	16.8	95.4	0.00	33.40	Sed/Fil	1.53	186,075	223,290
N. Branch WQ Pond - East	27.70	16.0	69.8	0.00	27.70	Sed/Fil	0.65	65,193	78,232
BMP Ponds (E, F, G)	3.79	23.6	100.0	0.00	3.79	ED Off-Line	0.54	7,365	8,838
BMP Ponds (L, M)	9.68	12.5	100.0	0.00	9.68	ED Off-Line	0.51	17,760	21,312
Section 7, Pond 4	38.30	15.9	64.6	0.00	38.30	Sed/Fil	1.10	333,333	400,000
US183 WQ Ponds North*	61.28	76.8	84.4	0.00	61.28	Sed/Fil	0.45	100,101	100,101
US183 WQ Ponds South*	14.44	81.8	85.3	0.00	14.44	Sed/Fil	0.50	26,263	26,263
Totals**	**168.57**	**25.0**	**81.6**	**0.00**	**168.57**		**N/A**	**547,922**	**657,506**
Totals***	**244.29**	**41.3**	**82.5**	**0.00**	**244.29**		**N/A**	**1,007,618**	**1,183,869**
			Uncaptured Area Percentage**	**0.00%**					
			Uncaptured Area Percentage***	**0.00%**					

* Existing US 183 ponds, with reduced volume in US183N due to SH 45 construction
** Excluding US 183 areas & Section 7, Pond 4 Volume
*** Including US 183 areas

Notes:

1) Base Volume = Captured Area (acres) X 43,560 sq ft/acre X Capture Volume (inches) X 1/12 ft/in
2) Total Volume = Base Volume + 20% for sediment storage
3) Section 7, Pond 4 is designed to accommodate the load from the easternmost drainage of Section 8
4) WQ stands for Water Quality
5) Pond Types: Extended Detention (ED) and Sedimentation/Filtration (Sed/Fil)

SH45/US183 Interchange
Water Pollution Abatement Plan

Form 0600, Attachment C
Pollutant Loading and Removal Summary

April 18, 2003

Drainage Area #	Drainage Area (Acres)	Existing Impervious Cover %	Proposed Impervious Cover %	Baseline TSS (lb/year)	Proposed TSS (lb/year)	Projected Increase in Load (lb/year)	Load Removal Required (80% of increase) (lb/year)	Load Removed (lb/year)
Line B & C Pond	55.7	42.8	86.5	18,503	49,423	30,920	24,736	33,917
N. Branch WQ Pond - West	33.4	16.8	95.4	4,682	34,461	29,779	23,823	27,603
N. Branch WQ Pond - East	27.7	16.0	69.8	3,672	17,864	14,193	11,354	13,197
BMP Ponds (E, F, G)	3.79	23.6	100.0	761	4,209	3,448	2,758	2,084
BMP Ponds (L, M)	9.68	12.5	100	1,109	10,751	9,642	7,714	5,241
Section 7, Pond 4	38.3	15.9	64.6	5,235	22,103	16,867	13,494	16,444
US183 WQ Ponds North*	61.28	76.8	84.4	15,309	22,179	6,870	5,496	0
US183 WQ Ponds South*	14.44	81.8	85.3	4,237	4,735	499	399	0
Totals**	**168.57**	**25.0**	**81.6**	**53,508**	**165,726**	**112,217**	**89,774**	**98,485**
Totals***	**244.29**	**41.3**	**82.5**					

* Existing US 183 ponds
** Totals for Drainage Areas and Impervious Cover do not include US 183 areas
*** Totals including US 183 areas

Note: Section 7, Pond 4 treats the easternmost drainage area of Section 8 that discharges east to Section 7

SH45/US183 Interchange
Water Pollution Abatement Plan

Form 0600, Attachment C
Pollutant Loading and Removal Calculation

April 18, 2003

Line B & C Extended Detention Pond

Load (lb/year)=Rf*P*A*C*0.226

Rf=Annual Runoff Coef. For the Fraction of Imprevious Cover (IC) = $0.546*IC^2+0.328*IC+0.03$

P=Annual Rainfall (in.) = 32.0

A=Area (Acres)

C=Average TSS Concentration (mg/L)

Baseline							Total Suspended Solids	
Location	Area (Acres)	Imper. Cover%	Imp. Area (Acres)	Rf	Runoff (inches)	Runoff (Ac-ft)	Conc. (mg/L)	Load (lb/year)
Undeveloped	0.00	0.00	0.00	0.030	0.96	0.0	80	0
Developed	55.70	42.80	23.84	0.270	8.65	40.2	170	18503
TOTAL	**55.70**	**42.80**	**23.84**	**0.270**	**8.65**	**40.2**	**170**	**18503**

Proposed							Total Suspended Solids	
Location	Area (Acres)	Imper. Cover%	Imp. Area (Acres)	Rf	Runoff (inches)	Runoff (Ac-ft)	Conc. (mg/L)	Load (lb/year)
Undeveloped	0.00	0.00	0.00	0.030	0.96	0.0	80	0
Developed	55.70	86.50	48.18	0.722	23.11	107.3	170	49423
TOTAL	**55.70**	**86.50**	**48.18**	**0.722**	**23.11**	**107.3**	**170**	**49423**

PROJECTED INCREASE IN LOAD **30920**
LOAD REMOVAL REQUIRED (80% OF INCREASE) **24736**

BYPASSED AREA 0.00
AREA REMAINING 55.70
LOAD BYPASSED **0**
LOAD REMAINING **49423**

VOLUME IN INCHES **1.34 *** **PERCENT LOAD TREATED*** **91.5%**
TREATED LOAD **45222**

PERCENT REMOVAL **EXTENDED DETENTION (ON-LINE)** **75%**
LOAD REMOVED **33917**

BASE POND VOLUME (AC-FT) **6.23**
BASE POND VOLUME (CU. FT.) **271528**
REQUIRED VOLUME = BASE POND VOLUME + 20% FOR SEDIMENT STORAGE **325834**

***This extended detention ponds is designed as an online BMPs , thus the entire TSS load is treated**

SH45/US183 Interchange
Water Pollution Abatement Plan

Form 0600, Attachment C
Pollutant Loading and Removal Calculation

April 18, 2003

North Branch Water Quality Pond - West (Sedimentation/Filtration)

Load (lb/year)=Rf*P*A*C*0.226

Rf=Annual Runoff Coef. For the Fraction of Imprevious Cover (IC) = $0.546*IC^2+0.328*IC+0.03$

P=Annual Rainfall (in.) = 32.0

A=Area (Acres)

C=Average TSS Concentration (mg/L)

Baseline							Total Suspended Solids	
Location	Area (Acres)	Imper. Cover%	Imp. Area (Acres)	Rf	Runoff (inches)	Runoff (Ac-ft)	Conc. (mg/L)	Load (lb/year)
Undeveloped	20.04	0.00	0.00	0.030	0.96	1.6	80	348
Developed	13.36	42.00	5.61	0.264	8.45	9.4	170	4334
TOTAL	**33.40**	**16.80**	**5.61**	**0.124**	**3.96**	**11.0**	**157**	**4682**

Proposed							Total Suspended Solids	
Location	Area (Acres)	Imper. Cover%	Imp. Area (Acres)	Rf	Runoff (inches)	Runoff (Ac-ft)	Conc. (mg/L)	Load (lb/year)
Undeveloped	0.00	0.00	0.00	0.030	0.96	0.0	80	0
Developed	33.40	95.40	31.86	0.840	26.87	74.8	170	34461
TOTAL	**33.40**	**95.40**	**31.86**	**0.840**	**26.87**	**74.8**	**170**	**34461**

PROJECTED INCREASE IN LOAD 29779
LOAD REMOVAL REQUIRED (80% OF INCREASE) 23823

BYPASSED AREA 0.00
AREA REMAINING 33.40
LOAD BYPASSED 0
LOAD REMAINING 34461

CAPTURE VOLUME IN INCHES 1.53 **PERCENT LOAD CAPTURED** 90%
CAPTURED LOAD 31015

PERCENT REMOVAL Sedimentation/Filtration 89%
LOAD REMOVED 27603

NET SEDIMENTATION FILTRATION POND REMOVAL PERCENTAGE 80%

BASE POND VOLUME (AC-FT) 4.27
BASE POND VOLUME (CU. FT.) 186075
REQUIRED VOLUME = BASE POND VOLUME + 20% FOR SEDIMENT STORAGE 223290

SH45/US183 Interchange
Water Pollution Abatement Plan

Form 0600, Attachment C
Pollutant Loading and Removal Calculation

April 18, 2003

North Branch Water Quality Pond - East (Sedimentation/Filtration)

Load (lb/year)=Rf*P*A*C*0.226

Rf=Annual Runoff Coef. For the Fraction of Imprevious Cover (IC) = $0.546*IC^2+0.328*IC+0.03$

P=Annual Rainfall (in.) = 32.0

A=Area (Acres)

C=Average TSS Concentration (mg/L)

Baseline							Total Suspended Solids	
Location	Area (Acres)	Imper. Cover%	Imp. Area (Acres)	Rf	Runoff (inches)	Runoff (Ac-ft)	Conc. (mg/L)	Load (lb/year)
Undeveloped	16.62	0.00	0.00	0.030	0.96	1.3	80	288
Developed	11.08	40.00	4.43	0.249	7.95	7.3	170	3383
TOTAL	**27.70**	**16.00**	**4.43**	**0.117**	**3.76**	**8.7**	**156**	**3672**

Proposed							Total Suspended Solids	
Location	Area (Acres)	Imper. Cover%	Imp. Area (Acres)	Rf	Runoff (inches)	Runoff (Ac-ft)	Conc. (mg/L)	Load (lb/year)
Undeveloped	0.00	0.00	0.00	0.030	0.96	0.0	80	0
Developed	27.70	69.80	19.33	0.525	16.80	38.8	170	17864
TOTAL	**27.70**	**69.80**	**19.33**	**0.525**	**16.80**	**38.8**	**170**	**17864**

PROJECTED INCREASE IN LOAD **14193**
LOAD REMOVAL REQUIRED (80% OF INCREASE) **11354**

BYPASSED AREA 0.00
AREA REMAINING 27.70
LOAD BYPASSED **0**
LOAD REMAINING **17864**

CAPTURE VOLUME IN INCHES **0.65** **PERCENT LOAD CAPTURED** **83%**
CAPTURED LOAD **14828**

PERCENT REMOVAL **Sedimentation/Filtration** **89%**
LOAD REMOVED **13197**

NET SEDIMENTATION FILTRATION POND REMOVAL PERCENTAGE **74%**

BASE POND VOLUME (AC-FT) **1.50**
BASE POND VOLUME (CU. FT.) **65193**
REQUIRED VOLUME = BASE POND VOLUME + 20% FOR SEDIMENT STORAGE **78232**

SH45/US183 Interchange
Water Pollution Abatement Plan

Form 0600, Attachment C
Pollutant Loading and Removal Calculation

April 18, 2003

BMP Ponds - Extended Detention Pond for Lines E, F & G

Load (lb/year)=Rf*P*A*C*0.226

Rf=Annual Runoff Coef. For the Fraction of Imprevious Cover (IC) = $0.546*IC^2+0.328*IC+0.03$

P=Annual Rainfall (In.) = 32.0

A=Area (Acres)

C=Average TSS Concentration (mg/L)

Baseline							Total Suspended Solids	
Location	Area (Acres)	Imper. Cover%	Imp. Area (Acres)	Rf	Runoff (inches)	Runoff (Ac-ft)	Conc. (mg/L)	Load (lb/year)
Undeveloped	2.00	0.00	0.00	0.030	0.96	0.2	80	35
Developed	1.79	50.00	0.90	0.331	10.58	1.6	170	727
TOTAL	**3.79**	**23.61**	**0.90**	**0.172**	**5.50**	**1.7**	**162**	**761**

Proposed							Total Suspended Solids	
Location	Area (Acres)	Imper. Cover%	Imp. Area (Acres)	Rf	Runoff (inches)	Runoff (Ac-ft)	Conc. (mg/L)	Load (lb/year)
Undeveloped	0.00	0.00	0.00	0.030	0.96	0.0	80	0
Developed	3.79	100.00	3.79	0.904	28.93	9.1	170	4209
TOTAL	**3.79**	**100.00**	**3.79**	**0.904**	**28.93**	**9.1**	**170**	**4209**

PROJECTED INCREASE IN LOAD **3448**
LOAD REMOVAL REQUIRED (80% OF INCREASE) **2758**

BYPASSED AREA 0.00
AREA REMAINING 3.79
LOAD BYPASSED **0**
LOAD REMAINING **4209**

CAPTURE VOLUME IN INCHES **0.54** **PERCENT LOAD CAPTURE** **66%**
CAPTURED LOAD **2778**

PERCENT REMOVAL **EXTENDED DETENTION (OFF-LINE)** **75%**
LOAD REMOVED **2084**

NET EXTENDED DETENTION POND REMOVAL PERCENTAGE **50%**

BASE POND VOLUME (AC-FT) **0.17**
BASE POND VOLUME (CU. FT.) **7365**
REQUIRED VOLUME = BASE POND VOLUME + 20% FOR SEDIMENT STORAGE **8838**

SH45/US183 Interchange
Water Pollution Abatement Plan

Form 0600, Attachment C
Pollutant Loading and Removal Calculation

April 18, 2003

BMP Ponds - Extended Detention Ponds for Lines L & M

Load (lb/year)=Rf*P*A*C*0.226
Rf=Annual Runoff Coef. For the Fraction of Imprevious Cover (IC) = $0.546*IC^2+0.328*IC+0.03$
P=Annual Rainfall (in.) = 32.0
A=Area (Acres)
C=Average TSS Concentration (mg/L)

Baseline							Total Suspended Solids	
Location	Area (Acres)	Imper. Cover%	Imp. Area (Acres)	Rf	Runoff (inches)	Runoff (Ac-ft)	Conc. (mg/L)	Load (lb/year)
Undeveloped	7.26	0.00	0.00	0.030	0.96	0.6	80	126
Developed	2.42	50.00	1.21	0.331	10.58	2.1	170	983
TOTAL	9.68	12.50	1.21	0.105	3.36	2.7	151	1109

Proposed							Total Suspended Solids	
Location	Area (Acres)	Imper. Cover%	Imp. Area (Acres)	Rf	Runoff (inches)	Runoff (Ac-ft)	Conc. (mg/L)	Load (lb/year)
Undeveloped	0.00	0.00	0.00	0.030	0.96	0.0	80	0
Developed	9.68	100.00	9.68	0.904	28.93	23.3	170	10751
TOTAL	9.68	100.00	9.68	0.904	28.93	23.3	170	10751

PROJECTED INCREASE IN LOAD			9642
LOAD REMOVAL REQUIRED (80% OF INCREASE)			7714
BYPASSED AREA	0.00		
AREA REMAINING	9.68		
LOAD BYPASSED			0
LOAD REMAINING			10751
CAPTURE VOLUME IN INCHES	0.51	PERCENT LOAD CAPTURE	65%
CAPTURED LOAD			6988
PERCENT REMOVAL	EXTENDED DETENTION (OFF-LINE)		75%
LOAD REMOVED			5241
NET EXTENDED DETENTION POND REMOVAL PERCENTAGE			49%
BASE POND VOLUME (AC-FT)			0.41
BASE POND VOLUME (CU. FT.)			17760
REQUIRED VOLUME = BASE POND VOLUME + 20% FOR SEDIMENT STORAGE			21312

SH45/US183 Interchange
Water Pollution Abatement Plan

Form 0600, Attachment C
Pollutant Loading and Removal Calculation

April 18, 2003

Drainage to Section 7, Pond 4

Load (lb/year)=Rf*P*A*C*0.226

Rf=Annual Runoff Coef. For the Fraction of Imprevious Cover (IC) = $0.546*IC^2+0.328*IC+0.03$

P=Annual Rainfall (in.) = 32.0

A=Area (Acres)

C=Average TSS Concentration (mg/L)

Baseline							Total Suspended Solids	
Location	Area (Acres)	Imper. Cover%	Imp. Area (Acres)	Rf	Runoff (inches)	Runoff (Ac-ft)	Conc. (mg/L)	Load (lb/year)
Undeveloped	24.90	0.00	0.00	0.030	0.96	2.0	80	432
Developed	13.41	45.43	6.09	0.292	9.33	10.4	170	4804
TOTAL	**38.30**	**15.90**	**6.09**	**0.122**	**3.89**	**12.4**	**156**	**5235**

Proposed							Total Suspended Solids	
Location	Area (Acres)	Imper. Cover%	Imp. Area (Acres)	Rf	Runoff (inches)	Runoff (Ac-ft)	Conc. (mg/L)	Load (lb/year)
Undeveloped	0.00	0.00	0.00	0.030	0.96	0.0	80	0
Developed	38.30	64.60	24.74	0.470	15.03	48.0	170	22103
TOTAL	**38.30**	**64.60**	**24.74**	**0.470**	**15.03**	**48.0**	**170**	**22103**

PROJECTED INCREASE IN LOAD		**16867**
LOAD REMOVAL REQUIRED (80% OF INCREASE)		**13494**
BYPASSED AREA	0.00	
AREA REMAINING	38.30	
LOAD BYPASSED		**0**
LOAD REMAINING		**22103**
CAPTURE VOLUME IN INCHES	**1.10**	
NET PERCENT REMOVAL FROM SECTION 7, POND 4		**74.4%**
LOAD REMOVED		**16444**

SH45/US183 Interchange
Water Pollution Abatement Plan

Form 0600, Attachment C
Pollutant Loading and Removal Calculation

April 18, 2003

US183 Water Quality Pond North - Sedimentation/Filtration

Load (lb/year)=Rf*P*A*C*0.226

Rf=Annual Runoff Coef. For the Fraction of Imprevious Cover (IC) = $0.546*IC^2+0.328*IC+0.03$

P=Annual Rainfall (In.) = 32.0

A=Area (Acres)

C=Average TSS Concentration (mg/L)

Baseline							Total Suspended Solids	
Location	Area (Acres)	Imper. Cover%	Imp. Area (Acres)	Rf	Runoff (inches)	Runoff (Ac-ft)	Conc. (mg/L)	Load (lb/year)
Offsite Developed	18.55	95.00	17.62	0.834	26.70	41.3	170	19015
Onsite Developed	42.73	68.87	29.43	0.515	16.48	58.7	170	27028
TOTAL	61.28	76.78	47.05	0.612	19.57	99.9	170	46043

CAPTURE VOLUME IN INCHES	0.50	PERCENT LOAD CAPTURED	75%
CAPTURED LOAD			34532
PERCENT REMOVAL	Sedimentation/Filtration		89%
LOAD REMOVED			30733
LOAD REMAINING			15309

Proposed							Total Suspended Solids	
Location	Area (Acres)	Imper. Cover%	Imp. Area (Acres)	Rf	Runoff (inches)	Runoff (Ac-ft)	Conc. (mg/L)	Load (lb/year)
Offsite Developed	18.55	95.00	17.62	0.834	26.70	41.3	170	19015
Onsite Developed	42.73	79.86	34.12	0.640	20.49	72.9	170	33605
TOTAL	61.28	84.44	51.75	0.699	22.37	114.2	170	52620

CAPTURE VOLUME IN INCHES	0.45	PERCENT LOAD CAPTURED	65%
CAPTURED LOAD			34203
PERCENT REMOVAL	Sedimentation/Filtration		89%
LOAD REMOVED			30441
LOAD REMAINING			22179
PROJECTED INCREASE IN LOAD			6870
LOAD REMOVAL REQUIRED (80% OF INCREASE)			5496

SH45/US183 Interchange
Water Pollution Abatement Plan

Form 0600, Attachment C
Pollutant Loading and Removal Calculation

April 18, 2003

US183 Water Quality Ponds South - Sedimentation/Filtration

Load (lb/year)=Rf*P*A*C*0.226

Rf=Annual Runoff Coef. For the Fraction of Imprevious Cover (IC) = $0.546*IC^2+0.328*IC+0.03$

P=Annual Rainfall (in.) = 32.0

A=Area (Acres)

C=Average TSS Concentration (mg/L)

Baseline							Total Suspended Solids	
Location	Area (Acres)	Imper. Cover%	Imp. Area (Acres)	Rf	Runoff (Inches)	Runoff (Ac-ft)	Conc. (mg/L)	Load (lb/year)
Offsite Developed	1.05	95.00	1.00	0.834	26.70	2.3	170	1076
Onsite Developed	13.39	80.81	10.82	0.652	20.85	23.3	170	10719
TOTAL	**14.44**	**81.84**	**11.82**	**0.665**	**21.28**	**25.6**	**170**	**11795**

CAPTURE VOLUME IN INCHES 0.50 **PERCENT LOAD CAPTURED** **72%**
CAPTURED LOAD **8493**

PERCENT REMOVAL Sedimentation/Filtration **89%**
LOAD REMOVED **7558**
LOAD REMAINING **4237**

Proposed							Total Suspended Solids	
Location	Area (Acres)	Imper. Cover%	Imp. Area (Acres)	Rf	Runoff (Inches)	Runoff (Ac-ft)	Conc. (mg/L)	Load (lb/year)
Offsite Developed	1.05	95.00	1.00	0.834	26.70	2.3	170	1076
Onsite Developed	13.39	84.59	11.33	0.698	22.34	24.9	170	11485
TOTAL	**14.44**	**85.35**	**12.32**	**0.708**	**22.66**	**27.3**	**170**	**12561**

CAPTURE VOLUME IN INCHES 0.50 **PERCENT LOAD CAPTURED** **70%**
CAPTURED LOAD **8793**

PERCENT REMOVAL Sedimentation/Filtration **89%**
LOAD REMOVED **7825**
LOAD REMAINING **4735**

PROJECTED INCREASE IN LOAD **499**
LOAD REMOVAL REQUIRED (80% OF INCREASE) **399**

SH45/183 Interchange
Water Pollution Abatement Plan

Form 0600, Attachment C
BMP Ponds - Volume Calculations

BMP Pond Number	Incoming Sewer Line	H	Side slope	Wtoe	Length	Volume ft^3	Volume gal	Design Q	Length of weir	Height of Weir	Height above flow line
E	Line E	3	2	15	30	1620	12118.4	2.21	5	0.26021	3.26021
F	Line F	3	2	12	98	4410	32989.1	5	5	0.44844	3.44844
G	Line G	3	2	10	72	2808	21005.3	4.177	5	0.39777	3.39777
L	Line L	3	4	31	96	10656	79712.4	28.73	5	1.43862	4.43862
M	Line M	3	4	37	96	12384	92638.8	31.99	7	1.23495	4.23495

Note: See BMP Pond Detail 1 in Chapter 5, Attachment F

ATTACHMENT F

Construction Plans

See Chapter 5 Site Plans

ATTACHMENT G

Inspection, Maintenance, Repair and Retrofit Plan

ATTACHMENT G

Inspection, Maintenance, Repair and Retrofit Plan

WATER QUALITY PONDS

SEDIMENTATION PONDS

Monthly	Check for vegetative growth.
Quarterly	Check for accumulated sediment in the sedimentation basin and inlet structure. If sediment depth is greater than vertical depth marker in pond, remove accumulated sediment and dispose of properly. If sediment impairs the proper function of the inlet structures, remove sediment. Check and remove trash and debris, especially near outlet.
Biannually	Check for structural damage (pipe, riprap, retaining walls, etc). Repair any cracks, voids, and undermining. Remove all trash and debris.
Annually	Clean any sediment form inlet structures if not removed during the quarterly maintenance
5-year	Remove all sediment in sedimentation basin at least every 5 years regardless of depth.
After rainfall	Check sediment depth in sedimentation basin after each rainfall greater than 1 inch to ensure that it drains within 48 hours. If it takes 48 hours or longer to drain, correct the problem

SAND FILTER SYSTEMS

Monthly	Check for vegetative growth. The growth shall not exceed 18 inches in height. Remove litter and debris from gabion dividers.
Quarterly	Check for accumulated sediment in the detention basin. If sediment depth is greater than 20% of the allocated volume, then remove sediment and dispose of properly. Mowing of upper stage, side slopes, embankment and emergency spillway and removal of all trash and debris.
Biannually	Check for structural damage (pipe, concrete drainage structure, retaining walls, etc). Repair any cracks, voids, undermining, and remove vegetation from cracks and joints. . If there are erosion problems inside or downstream of BMP, repair and replant immediately.
Annually	Sediment should be cleared from inlet structure.
2-year	Clean underdrain piping to remove any sediment buildup or as needed to maintain 48 hours drawdown time.
As needed	When drawdown time exceeds 72 hours, remove the upper layer of the sand and replace with new materials meeting the original specifications. Remove and replace all discolored sand.
After rainfall	Check sediment depth in filtration basin after each rainfall greater than 1 inch to ensure that it drains within 48 hours. If it takes 48 hours or longer to drain, correct the problem

WATER QUALITY PONDS, continued

EXTENDED DETENTION PONDS/SMALL BMP PONDS

Monthly	Check for vegetative growth. The growth shall not exceed 18 inches in height or allow woody growth. Check and remove trash and debris, especially near outlet.
Quarterly	Check for accumulated sediment in the detention basin. If sediment depth is greater than 20% of the allocated volume, then remove sediment and dispose of properly. Mowing of upper stage, side slopes, embankment and emergency spillway and removal of all trash and debris.
Biannually	Mowing of grass areas in and around basin. If there are erosion problems inside or downstream of BMP, repair and replant immediately. Check for structural damage (pipe, concrete drainage structure, retaining walls, etc). Repair any cracks, voids, and remove vegetation from cracks and joints.
As needed	Replace inlet/outlet and riser works as they deteriorate. Complete removal of sediment from sedimentation chamber
After rainfall	Check for clogging or for too rapid a release. Check sediment depth in sedimentation basin after each rainfall greater than 1 inch to ensure that it drains within 48 hours. If it takes 48 hours or longer to drain, then repairs should be scheduled immediately.

OTHER PERMANENT BMP

GRASSY SWALE

Monthly	Mowing and lawn care shall be utilized as vegetation growth shall not exceed 2 inches above design water depth.
Quarterly	Remove litter and debris.
Biannually	Check for erosion or damage to vegetation. If bare spots and erosion are identified, the areas should be replanted and restored to original specifications. Regrading of area may be necessary in area of excessive erosion.
As needed	Sediment accumulation up to 3 inches in culvert and in channels needs to be removed and disposed of properly. The sediment shall be removed by hand or flat bottom shovel. Grass damaged during sediment removal shall be replanted promptly.
After rainfall	Check for erosion or damage to vegetation.

- Sediment and other materials that accumulate in stormwater BMPs must be characterized. Based upon characterization, the waste must be classified, then the waste must be disposed of properly according to current state (30 TAC 330 or 335) and federal rules (40 CFR Subchapter C or D).

ATTACHMENT G

Inspection, Maintenance, Repair and Retrofit Plan

An amended copy of this document will be provided to the TCEQ within 30 days of any changes in the following information

Responsible Party for Maintenance:

Phillip E. Russell, P.E.
Director of the Texas Turnpike Authority
125 E. 11th Street
Austin, TX 78701-2433
512-936-0903

_____

Signature of Responsible Party

PROJ: _____
CONTROL: _____
HIGHWAY: _____
COUNTY: _____

INSPECTION AND MAINTENANCE REPORT

Weekly (For areas having ≥ 20 in. avg. annual rainfall) or
Monthly (For < 20 in.) and after 1/2 in. rain

Amount of Last Rainfall: _____

Date: _____

* Site or Drainage Area	Approximate Stations From	To	Lt or Rt of Centerline	**Date Since Last Disturbed	**Date of Next Disturbance	Control Measures	Current Condition	Corrective Action or Remarks	Work Sequence Priority

* See site map for drainage areas. Site may include borrow sources, haul roads, contractor's yard, stockpiles, etc.

** Areas which will be exposed more than 21 days must be stabilized within 14 days.

_____
Construction Superintendent

_____
TxDOT Inspector

Control Measure Codes

1. Temporary Seeding
2. Permanent Plant, Sod, or Seed
3. Mulch
4. Soil Retention Blanket
5. Buffer Zone
6. Preserve Natural Resource
7. Silt Fence
8. Hay Bales
9. Rock Berm
10. Diversion Dike
11. Diversion Swale
12. Diversion Dike/Swale
13. Pipe Slope Drain
14. Paved Flume
15. Rock Bed at Construction Exit
16. Timber Mat at Construction Exit
17. Channel Liner
18. Sediment Trap
19. Sediment Basin
20. Storm Inlet Sediment Trap
21. Stone Outlet Structure
22. Curbs and Gutters
23. Storm Sewers
24. Velocity Control Devices
25. Excess Dirt Removed from Rdwy Daily
26. Haul Roads Dampened for Dust Control
27. Cleanup of Possible Contaminants
28. _____
29. _____
30. _____

Condition Codes

- U Upgrade needed
- R Replacement needed
- M Maintainence needed
- C Cleaning needed
- I Increase measures
- S Stable (no action)
- O1 Other: _____
- O2 Other: _____
- O3 Other: _____

Falsifying information on this Inspection and Maintenance Report may result in a fine of up to $25,000 by Federal Law.

TNRCC-0599

AGENT AUTHORIZATION FORM

Agent Authorization Form
For Required Signature
Edward Aquifer Protection Program
Relating to 30 TAC CHAPTER 213
Effective June 1, 1999

I Phillip E. Russell P.E.,
Print Name

Director

Title - Owner/President/Other

of Texas Turnpike Authority
Corporation/Partnership/Entity Name

have authorized John W. Strybos, P.E.

Print Name of Agent/Engineer

of HNTB Corporation
Print Name of Firm

to represent and act on the behalf of the above named Corporation, Partnership, or Entity for the purpose of preparing and submitting this plan application to the Texas Natural Resource Conservation Commission (TNRCC) for the review and approval consideration of regulated activities.

I also understand that:

1. The applicant is responsible for compliance with 30 Texas Administrative Code Chapter 213 and any condition of the TNRCC's approval letter. The TNRCC is authorized to assess administrative penalties of up to $10,000 per day per violation.

2. A notarized copy of the Agent Authorization Form must be provided for the person preparing the application, and the forms must accompany the completed application.

3. Application fees are due and payable at the time the application is submitted. The application fee must be sent to the TNRCC cashier or to the appropriate regional office. The application will not be considered until the correct fee is received by the commission.

4. For applicants who are not the property owner, but who have the right to control and possess and control the property, additional authorization is required from the owner.

_____

Applicant's Signature Date

THE STATE OF _____ §

County of _____ §

BEFORE ME, the undersigned authority, on this day personally appeared_____ known to me to be the person whose name is subscribed to the foregoing instrument, and acknowledged to me that (s)he executed same for the purpose and consideration therein expressed.

GIVEN under my hand and seal of office on this ___ day of _____, ____.

NOTARY PUBLIC

Typed or Printed Name of Notary

MY COMMISSION EXPIRES:

Agent Authorization Form
For Required Signature
Edward Aquifer Protection Program
Relating to 30 TAC CHAPTER 213
Effective June 1, 1999

I Phillip E. Russell, P. E.,
Print Name

Director
Title - Owner/President/Other

of Texas Turnpike Authority
Corporation/Partnership/Entity Name

have authorized L. Stephen Stecher, P.E.,
Print Name of Agent/Engineer

of Crespo Consulting Services, Inc.
Print Name of Firm

to represent and act on the behalf of the above named Corporation, Partnership, or Entity for the purpose of preparing and submitting this plan application to the Texas Natural Resource Conservation Commission (TNRCC) for the review and approval consideration of regulated activities.

I also understand that:

1. The applicant is responsible for compliance with 30 Texas Administrative Code Chapter 213 and any condition of the TNRCC's approval letter. The TNRCC is authorized to assess administrative penalties of up to $10,000 per day per violation.

2. A notarized copy of the Agent Authorization Form must be provided for the person preparing the application, and the forms must accompany the completed application.

3. Application fees are due and payable at the time the application is submitted. The application fee must be sent to the TNRCC cashier or to the appropriate regional office. The application will not be considered until the correct fee is received by the commission.

4. For applicants who are not the property owner, but who have the right to control and possess and control the property, additional authorization is required from the owner.

_____

Applicant's Signature Date

THE STATE OF _____ §

County of _____ §

BEFORE ME, the undersigned authority, on this day personally appeared_____ known to me to be the person whose name is subscribed to the foregoing instrument, and acknowledged to me that (s)he executed same for the purpose and consideration therein expressed.

GIVEN under my hand and seal of office on this ___ day of _____, ____.

NOTARY PUBLIC

Typed or Printed Name of Notary

MY COMMISSION EXPIRES:

Agent Authorization Form
For Required Signature
Edward Aquifer Protection Program
Relating to 30 TAC CHAPTER 213
Effective June 1, 1999

I Phillip E. Russell, P. E.,
Print Name

Director
Title - Owner/President/Other

of Texas Turnpike Authority
Corporation/Partnership/Entity Name

have authorized Leticia E. Sosa, P.E.,
Print Name of Agent/Engineer

of Turner Collie and Braden
Print Name of Firm

to represent and act on the behalf of the above named Corporation, Partnership, or Entity for the purpose of preparing and submitting this plan application to the Texas Natural Resource Conservation Commission (TNRCC) for the review and approval consideration of regulated activities.

I also understand that:

1. The applicant is responsible for compliance with 30 Texas Administrative Code Chapter 213 and any condition of the TNRCC's approval letter. The TNRCC is authorized to assess administrative penalties of up to $10,000 per day per violation.

2. A notarized copy of the Agent Authorization Form must be provided for the person preparing the application, and the forms must accompany the completed application.

3. Application fees are due and payable at the time the application is submitted. The application fee must be sent to the TNRCC cashier or to the appropriate regional office. The application will not be considered until the correct fee is received by the commission.

4. For applicants who are not the property owner, but who have the right to control and possess and control the property, additional authorization is required from the owner.

_____

Applicant's Signature Date

THE STATE OF _____ §

County of _____ §

BEFORE ME, the undersigned authority, on this day personally appeared_____ known to me to be the person whose name is subscribed to the foregoing instrument, and acknowledged to me that (s)he executed same for the purpose and consideration therein expressed.

GIVEN under my hand and seal of office on this ___ day of _____, ____.

NOTARY PUBLIC

Typed or Printed Name of Notary

MY COMMISSION EXPIRES:

SITE PLANS

INCLUDES SITE GEOLOGIC MAP INFOMRATION

SITE GEOLOGIC MAP

S. H. 45 / U. S. 183 Interchange

Site Geologic Maps are included on the Site Plans in Chapter 7

Explanation:

Road Right-of-Way Boundary

Sensitive Features S-4

Geologic Features:

Edwards Formation Outcrop Ked

Geologic Map Source: Garner and Young, 1976, "Environmental Geology of the Austin Area: An Aid to Urban Planning," Bureau of Economic Geology Report of Investigations No. 86.

Scale:
1 inch = 100 feet

TNRCC-0582

SEWAGE COLLECTION SYSTEM APPLICATION

Sewage Collection System Application
for Regulated Activities
on the Edwards Aquifer Recharge Zone
and Relating to 30 TAC §213.5(c), Effective June 1, 1999

REGULATED ENTITY NAME: Texas Department of Transportation Texas Turnpike Authority Division

X **ATTACHMENT A - Sewage Collection System Submittal Application.** The Texas Natural Resource Conservation Commission's (TNRCC) Sewage Collection System Submittal Application (F-10243) is provided as an aid in fulfilling the review requirements of 30 TAC Chapter 317 titled Design Criteria for Sewerage Systems, §317.1 and §317.2 is submitted with this Edwards Aquifer Sewage Collection System Application Form. Failure to complete all pertinent questions will result in the plan not being accepted or in possible delays in the review and approval of the project.

CUSTOMER INFORMATION (if different than customer information provided on core data form)

1. The entity and contact person responsible for providing the required engineering **certification** of testing for this sewage collection system upon completion (including private service connections) and every five years thereafter to the appropriate TNRCC region office pursuant to 30 TAC §213.5(c) is:

Contact Person:	Phillip Russell, P.E.
Entity:	Texas Department of Transportation Texas Turnpike Authority Division
Mailing Address:	125 East 11th Street
City, State:	Austin, Texas Zip:78701
Telephone:	512 – 936 – 0903 Fax:512 – 225 –1400

The appropriate regional office must be informed of any changes in this information within 30 days of the change.

2. The engineer responsible for the **design** of this sewage collection system is:

Contact Person:	John Strybos, P.E.
Entity:	HNTB
Mailing Address:	85 N.E. Loop 410, Suite 304
City, State:	San Antonio, Texas Zip:78216
Telephone:	210 – 349 – 2277 Fax: 210 – 349 – 2101

Texas Licensed Professional Engineer's Serial Number: 64259

PROJECT DESCRIPTION

3. Anticipated type of development to be served (estimated future population to be served, plus adequate allowance for institutional and commercial flows):

___ Residential: # of single-family lots:
___ Multi-family residential units:
X Commercial
___ Industrial
___ Off-site system (not associated with any development)
____ Other:

4. The character and volume of wastewater is shown below:

100 % Domestic	510 gallons/day
____ % Industrial	____ gallons/day
____ % Commingled	____ gallons/day
100 Total	510 gallons/day

5. Existing and anticipated infiltration/inflow is N/A gallons/day.

6. A Water Pollution Abatement Plan (WPAP) is required for construction of any associated commercial, industrial or residential project located on the Recharge Zone.

__ The WPAP application for this development was approved by letter dated . A copy of the approval letter is attached at the end of this application.

X The WPAP application for this development was submitted to the TNRCC as part of this application, but has not been approved.

__ A WPAP application is required for an associated project, but it has not been submitted.

__ There is no associated project requiring a WPAP application.

7. Pipe description:

Pipe Diameter (Inches)	Linear Feet[1]	Pipe Material[2]	Specifications[3]
21	1,707	DI	ASTM F679
8	1,659	PVC – SDR-26	
12	20	PVC – SDR-26	
Total Linear Feet	3,386		

1) Include stub-outs. Do not include private service laterals.
2) If PVC, state SDR value.
3) ASTM / ANSI / AWWA specification and class numbers should be included.

8. The following Wastewater Treatment Plant (WWTP) City of Austin Walnut Creek will receive project wastewater for treatment and disposal. This WWTP is an **EXISTING/PROPOSED** facility.

9. All components of this sewage collection system will comply with:

X The City of Austin standard specifications.

__ Other. Specifications are provided directly behind this page.

10. X No force main(s) and/or lift station(s) are associated with this sewage collection system.
__ A force main(s) and/or lift station(s) is associated with this sewage collection system and the Lift Station/Force Main System application is included with this application.

CURVED SEWER LINES

11. **ATTACHMENT B - Calculations for Minimum Radius of Curvature.** Curved sewer lines may use either JOINT DEFLECTION or PIPE FLEXURE METHOD, but not both. Indicate the method proposed. Calculations for the minimum radius of curvature are shown in **ATTACHMENT B**.

__ Joint Deflection - The maximum allowable joint deflection is the lesser of the following three alternatives:
__ equal to 5°; or
__ 80% of the manufacturer's recommended maximum deflection; or
__ 80% of the appropriate ASTM, AWWA, ANSI or nationally-established standard for joint deflection.

X Pipe Flexure - The minimum radius of curvature has been computed by assuming standard lengths of straight pipe.
X The standard length used in the calculations is the maximum length manufactured for the specific type of pipe to be installed.
__ A __-foot length of pipe was used in the calculations. The specific type and length of the curved sections of line must be indicated on both the Plan and Profile views.
__ The curvature has been provided without rotation of the joint.

MANHOLES AND CLEANOUTS

12. Manholes or clean-outs exist at the end of each sewer line(s). These locations are listed below:

Line	Shown on Sheet	Station	Manhole or Clean-out?
A	779	0+00	Manhole A22
A	779	1+64.28	Manhole A23
A	780	3+62.18	Manhole A24
A	780	3+79.84	Manhole A25
A	781	3+79.84	Manhole A25
A	781	8+64.05	Manhole A26
A	781	12+41.07	Manhole A27
A	782	16+79.90	Manhole A28
A	782	17+06.59	Manhole A29
A1	779	0+00	Manhole A27
A1	779	0+29.86	Existing Manhole
A	76	0+00	Existing Manhole
A	76	2+46	Manhole A-1
A	77	5+52.40	Manhole A-2
A	77	6+60	Manhole A-3
A	77	7+43.50	Manhole A-4
A	78	12+49	Manhole A-5
A	78	13+73	Manhole A-6
A-1	79	0+00	Manhole A-5
A-1	79	1+20	Cleanout
A-2	79	0+00	Manhole A-4
A-2	79	1+74	Cleanout

13. Deviations from uniform grade without manholes (e.g., grade breaks or vertical curves) will require specific approval.

X There are no deviations from uniform grade in this sewage collection system without manholes.

— **ATTACHMENT C - Justification for Deviation in Grade Without Manholes.** Justification for deviations from uniform grade in this sewage collection system without manholes is provided in **ATTACHMENT C** at the end of this form.

14. Deviations from straight alignment without manholes (i.e., horizontal curves) will require specific approval.

X There are no deviations from straight alignment in this sewage collection system without manholes.

— **ATTACHMENT D - Justification for Deviation in Straight Alignment Without Manholes.** Justification for deviations from straight alignment in this sewage collection system without manholes is provided in **ATTACHMENT D** at the end of this form.

— For curved sewer lines, all curved sewer line notes (F-0596) are included on the construction plans for the wastewater collection system.

15. X Manholes are installed at all Points of Curve (PC) and Points of Tangent (PT) of a sewer line.

— **ATTACHMENT E - Request for Variance from Design Criteria.** A request for a variance from this design criteria may be granted by the executive director if detailed engineering justification is provided showing that it will not result in an unreasonable risk to the Edwards Aquifer. Written justification for the variance request is provided in **ATTACHMENT E** at the end of this form. A letter of approval from the maintenance entity is acceptable as justification.

16. X The maximum spacing between manholes on this project for each pipe diameter is no greater than:

Pipe Diameter (inches)	Max. Manhole Spacing (feet)
6 - 15	500
16 - 30	800
36 - 48	1000
≥54	2000

— The maximum spacing between manholes on this project (for each pipe diameter used) is greater than listed in the table above. Justification for any variance from the maximum spacing must include a letter from the entity which will operate and maintain the system stating that it has the capability to maintain lines with manhole spacing greater than the allowed spacing.

17. — All manholes will be monolithic, cast-in-place concrete.

X The owner/developer of this project is requesting the use of pre-cast manholes. The manufacturer's specifications and construction drawing, showing the method of sealing the joints, are attached on sheet 789

SITE PLAN

Items 18 through 23 must be included on the Site Plan.

18. The Site Plan must have a minimum scale of 1" = 400'.
    Site Plan Scale:
    Water and Wastewater layout scale: 1" = 400'.
    Plan and Profile sheet scale: 1"=50'

19. The Site Plan must include the sewage collection system general layout, including manholes with station numbers, and sewer pipe stubouts (if any). Site plan must be overlain by topographic contour lines, using a contour interval of not greater than ten feet and showing the area within both the five-year floodplain and the 100-year floodplain of any drainage way.

20. Lateral stub-outs:

    __ The location of all lateral stub-outs are shown and labeled.
    X No lateral stub-outs will be installed during the construction of this sewer collection system.

21. Location of existing and proposed water lines:

    __ The entire water distribution system for this project is shown and labeled.
    X If not shown on the Site Plan, a Utility Plan is provided showing the entire water and sewer systems.
    __ There will be no water lines associated with this project.

22. 100-year floodplain:

    X After construction is complete, no part of this project will be in or cross a 100-year floodplain, either naturally occurring or manmade. (Do not include streets or concrete-lined channels constructed above of sewer lines.)
    __ After construction is complete, all sections located within the 100-year floodplain will have water-tight manholes. These locations are listed in the table below and are shown and labeled on the Site Plan. (Do not include streets or concrete-lined channels constructed above sewer lines.)

Line	Sheet	Station		Station
	of		to	
	of		to	
	of		to	
	of		to	

23. 5-year floodplain:

X After construction is complete, no part of this project will be in or cross a 5-year floodplain, either naturally occurring or man-made. (Do not include streets or concrete-lined channels constructed above sewer lines.)

__ After construction is complete, all sections located within the 5-year floodplain will be encased in concrete or capped with concrete. These locations are listed in the table below and are shown and labeled on the Site Plan. (Do not include streets or concrete-lined channels constructed above sewer lines.)

Line	Sheet	Station		Station
	of		to	
	of		to	
	of		to	
	of		to	

Items 24 through 31 must be included on the Plan and Profile sheets.

24. __ All existing or proposed water line crossings and any parallel water lines within 9 feet of sewer lines are listed in the table below. These lines must have the type of pressure rated pipe to be installed shown on the plan and profile sheets. Any request for a variance from the required pressure rated piping at crossings must include a variance approval from 30 TAC Chapter 290.

__ There will be no water line crossings.

X There will be no water lines within 9 feet of proposed sewer lines.

Line	Station or Closest Point	Crossing or Parallel	Horizontal Separation Distance	Vertical Separation Distance

25. Vented Manholes:

X **No part** of this sewer line is within the 100-year floodplain and vented manholes are not required by 30 TAC Chapter 317.

__ **A portion** of this sewer line is within the 100-year floodplain and vented manholes will be provided at less than 1500 foot intervals. These water-tight manholes are listed in the table below and labeled on the appropriate profile sheets.

__ **A portion** of this sewer line is within the 100-year floodplain and an alternative means of venting shall be provided at less than 1500 feet intervals. A description of the alternative means is described on the following page.

__ **A portion** of this sewer line is within the 100-year floodplain; however, there is no interval longer than 1500 feet located in the 100-year floodplain. No vented manholes will be used.

Line	Manhole	Station	Sheet
			of
			of
			of
			of
			of
			of

26. Drop manholes:

__ There are no drop manholes associated with this project.

X Sewer lines which enter new or existing manholes or "manhole structures" higher than 30 inches above the manhole invert are listed in the table below and labeled on the appropriate profile sheets. These lines meet the requirements of 30 TAC §317.2(c)(5)(E).

Line	Manhole	Station	Sheet
A-1	A-5	12+49	79
A	Existing	0+00	76
			Of
			Of
			Of

27. Sewer line stub-outs (For proposed extensions):

___ The placement and markings of all sewer line stub-outs are shown and labeled.
_X_ No sewer line stub-outs are to be installed during the construction of this sewage collection system.

28. Lateral stub-outs (For proposed private service connections):

___ The placement and markings of all lateral stub-outs are shown and labeled.
_X_ No lateral stub-outs are to be installed during the construction of this sewage collection system.

29. Minimum flow velocity (From APPENDIX A)

_X_ Assuming pipes are flowing full, all slopes are designed to produce flows equal to or greater than 2.0 feet per second for this system/line.
___ **ATTACHMENT F - Explanation of Slopes for Flows Less than 2.0 Feet Per Second.** Assuming pipes are flowing full, some slopes are designed to produce flows less than 2.0 feet per second for this system/line. An explanation is provided in **ATTACHMENT F** at the end of this form.

30. Maximum flow velocity/slopes (From APPENDIX A)

_X_ Assuming pipes are flowing full, all slopes are designed to produce maximum flows of less than or equal to 10 feet per second for this system/line.
___ **ATTACHMENT G - Explanation of Slopes for Flows Greater Than 10.0 Feet Per Second.** Assuming pipes are flowing full, some slopes produce flows which are greater than 10 feet per second. These locations are listed in the table below. A variance is requested to exceed the maximum slope. Justification is provided in **ATTACHMENT G** at the end of this form.

Line	Profile Sheet	Station		Station	FPS	% Slope	Erosion/ Shock Protection
	of		to				
	of		to				
	of		to				
	of		to				

31. Assuming pipes are flowing full, where flows are ≥ 10 feet per second the provisions noted below have been made to protect against pipe displacement by erosion and/or shock. 30 TAC §317.2(c)(3)

— Concrete encasement shown on appropriate Plan and Profile sheets for the locations listed in the table above.

— Steel-reinforced, anchored concrete baffles/retards placed every 50 feet shown on appropriate Plan and Profile sheets for the locations listed in the table above.

— **ATTACHMENT H - Other Protection Methods Against Erosion/Shock.** Other. An explanation is provided in **ATTACHMENT H** at the end of this form.

N/A

ADMINISTRATIVE INFORMATION

33. X The **final plans and technical specifications** are submitted for the TNRCC's review. Each sheet of the construction plans and specifications are dated, signed, and sealed by the Texas Licensed Professional Engineer responsible for the design on each sheet.

34. Standard details are shown on the detail sheets, which are dated, signed, and sealed by the Texas Licensed Professional Engineer, as listed in the table below:

Standard Details	Shown on Sheet
Lateral stub-out marking [**REQUIRED**]	N/A
Manhole, showing inverts comply with 30 TAC 317.2(c)(5)(E) [**REQUIRED**]	789
Alternate method of joining lateral to existing SCS line for potential future connections [**REQUIRED**]	N/A
Typical trench cross-sections [**REQUIRED**]	791
Bolted manholes [**REQUIRED**]	788
Sewer Service lateral standard details [**REQUIRED**]	790
Clean-out at end of line [**REQUIRED, if used**]	790
Baffles or concrete encasement for shock/erosion protection [**REQUIRED, if flow velocity of any section of pipe >10 fps**]	N/A
Detail showing Wastewater Line/Water Line Crossing [**REQUIRED, if crossings are proposed**]	N/A
Mandrel detail or specifications showing compliance with 30 TAC §317.2(a)(4)(C) [**REQUIRED, if Flexible Pipe is used**]	N/A
Drop manholes [**REQUIRED, if a pipe entering a manhole is more than 30 inches above manhole invert**]	789

35. X All organized sewage collection system general construction notes (F-0596) are included on the construction plans for this sewage collection system.

36. X The Engineering Design Report required by 30 TAC §317.2(a)(2) or the current version of DESIGN CRITERIA FOR SEWERAGE SYSTEMS and demonstrating that the design and operational characteristics of the system will maintain the structural integrity of the system during its minimum life cycle is included with this application. The report for appropriate pipe selections shall be prepared in the format provided by the Wastewater Permits Section (F-10243). For Rigid Pipe, Item T60 of the Wastewater Permits Section's Submittal Application should be completed. For Flexible Pipe, items T62 through T87 should be completed.

37. X All proposed sewer lines will be sufficiently surveyed/staked to allow an inspection prior to TNRCC executive director approval. If the alignment of the proposed sewer lines are not walkable for inspection on that date, the application will be deemed incomplete and returned.

38. X One (1) original and three (3) copies of the completed application has been provided.

39. X Any modification of this SCS application will require TNRCC approval, prior to construction, and may require submission of a revised application, with appropriate fees.

To the best of my knowledge, the responses to this form accurately reflect all information requested concerning the proposed regulated activities and methods to protect the Edwards Aquifer. This **SEWAGE COLLECTION SYSTEM APPLICATION** is hereby submitted for TNRCC review and executive director approval. The system was designed in accordance with the requirements of 30 TAC §213.5(c) and 30 TAC §317 and prepared by:

Place engineer's seal here:



4-18-2003

John W. Strybos, P.E.
Print Name of Licensed Professional Engineer

Signature of Licensed Professional Engineer

Date 4-18-2003

Individuals are entitled to request and review their personal information that the agency gathers on its forms. They may also have any errors in their information corrected. To review such information, contact us at 512/239-3282.

APPENDIX A
Flow Velocity Table

Flow Velocity (Flowing Full)

All gravity sewer lines on the Edwards Aquifer Recharge Zone shall be designed and constructed with hydraulic slopes sufficient to give a velocity when **flowing full** of not less than 2.0 feet per second, and not greater than 10 feet per second. The grades shown in the following table are based on Manning's formula and an n factor of 0.013 and shall be the minimum and maximum acceptable slopes unless provisions are made otherwise.

Pipe Diameter (Inches)	% Slope required for minimum flow velocity of 2.0 fps	% Slope which produces flow velocity of 10.0 fps
6	0.50	12.35
8	0.33	8.40
10	0.25	6.23
12	0.20	4.88
15	0.15	3.62
18	0.11	2.83
21	0.09	2.30
24	0.08	1.93
27	0.06	1.65
30	0.055	1.43
33	0.05	1.26
36	0.045	1.12
39	0.04	1.01
>39	*	*

* For lines larger than 39 inches in diameter, the slope may be determined by Manning's formula (as shown below) to maintain a minimum velocity greater than 2.0 feet per second when flowing full and a maximum velocity less than 10 feet per second when flowing full.

$$V = \frac{1.49}{n} x\, R_h^{0.67} x\sqrt{S}$$

TNRCC-0596

ORGANIZED SEWAGE COLLECTION SYSTEM

GENERAL CONSTRUCTION NOTES

Texas Natural Resource Conservation Commission
Organized Sewage Collection System
General Construction Notes (F-0596)

1. This Organized Sewage Collection System must be designed and constructed in accordance with the Texas Natural Resource Conservation Commission's (TNRCC) Edwards Aquifer Rules 30 Texas Administrative Code (TAC) §213.5(c), the Design Criteria for Sewerage Systems 30 TAC §317.1, 30 TAC §317.2, 30 TAC §317.3, and 30 TAC §317.13, and the City of Standard Specifications.

2. All contractors conducting regulated activities associated with this proposed regulated project must be provided with copies of the Sewage Collection System plan and the TNRCC letter indicating the specific conditions of its approval. During the course of these regulated activities, the contractors must be required to keep on-site copies of the plan and the approval letter.

3. Prior to commencing any regulated activity, the applicant or his agent must notify the Austin Regional Office, in writing, of the date on which the regulated activity will begin.

4. Any modification to the activities described in the referenced SCS application following the date of approval may require the submittal of an SCS application to modify this approval, including the payment of appropriate fees and all information necessary for its review and approval.

5. The temporary erosion and sedimentation controls must be installed prior to initiating any other construction activity and maintained in accordance with the requirements of the construction plans. All temporary erosion and sedimentation controls must be removed when the construction area is stabilized.

6. The sewer line trench details showing the cross section with the dimensions, pipe placement, and backfill instructions are included on Plan Sheet __ of __ of these plans. All sewer pipes joints must meet the requirements in 30 TAC §317.2(a)(3).

   Gravity lines must be SDR 35 or less. Pressurized sewer systems must have pipe with a minimum working pressure rating of 150 psi.

   The ASTM, ANSI, or AWWA specification numbers for the pipe(s) and joints are ASTM F-769 T-1 Wall.

   The pipe material, the pressure classes, and the SDR and/or DR designations are PVC, SDR-26.

7. If any sensitive features are discovered during the wastewater line trenching activities, all regulated activities near the sensitive feature must be suspended immediately. The owner must notify the appropriate regional office of the Texas Natural Resource Conservation Commission in writing within two working days of the feature discovered. The applicant must submit a plan for ensuring the structural integrity of the sewer line or for modifying the proposed collection system alignment around the feature. The regulated activities near the sensitive feature may not proceed until the executive director has reviewed and approved the methods proposed to protect the sensitive feature and the Edwards Aquifer from any potentially adverse impacts to water quality while maintaining the structural integrity of the line.

8. Sewer lines located within or crossing the 5-year floodplain of a drainageway will be protected from

inundation and stream velocities which could cause erosion and scouring of backfill. The trench must be capped with concrete to prevent scouring of backfill, or the sewer lines must be encased in concrete. All concrete shall have a minimum thickness of six (6) inches.

9. Blasting procedures for protection of existing sewer lines and other utilities will be in accordance with the National Fire Protection Association criteria. Sand is not allowed as bedding or backfill in trenches that have been blasted. If any existing sewer lines are damaged, the lines must be repaired and retested.

10. All manholes constructed or rehabilitated on this project must have watertight size on size resilient connectors allowing for differential settlement. If manholes are constructed within the 100-year floodplain, the cover must have a gasket and be bolted to the ring. Where gasketed manhole covers are required for more than three manholes in sequence or for more than 1500 feet, alternate means of venting will be provided. Bricks are not an acceptable construction material for any portion of the manhole.

    The diameter of the manholes must be a minimum of four feet and the manhole covers must have a minimum nominal diameter of two feet. These dimensions and other details showing compliance with the commission's rules concerning manholes and sewer line/manhole inverts described in 30 TAC 317.2(c)(5)(E) are included on Plan Sheet 789.

    It is suggested that entrance into manholes in excess of four feet deep be accomplished by means of a portable ladder. Where steps are used, they shall be made of a non-corrosive material and be in accordance with applicable OSHA specifications.

11. Where water lines and new sewer line are installed with a separation distance closer than nine feet (i.e., water lines crossing wastewater lines, water lines paralleling wastewater lines, or water lines next to manholes) the installation must meet the requirements of 30 TAC §317.13 (Design of Sewerage Systems) or 30 TAC §290.44(e) (Water Hygiene).

12. Where sewers lines deviate from straight alignment and uniform grade all curvature of sewer pipe must be achieved by the following procedure which is recommended by the pipe manufacturer:

    If pipe flexure is proposed, the contractor shall use procedures that are recommended by the pipe manufacturer to prevent deflection of the joint.

    Specific care must be taken to ensure that the joint is placed in the center of the trench and properly bedded in accordance with 30 TAC §317.2(a)(5).

13. New sewage collection system lines must be constructed with "stub outs" for the connection of anticipated extensions. The location of such "stub outs" must be marked on the ground such that the location of such "stub outs" can be easily determined at the time of connection of the extensions. Such "stub outs" must be manufactured wyes or tees that are compatible in size and material with both the sewer line and the extension. At the time of original construction, new "stub-outs" must be constructed sufficiently to extend beyond the edge(s) of any street pavement under which they will pass to the property line. All "stub-outs" must be sealed with a manufactured cap to prevent leakage. Extensions that were not anticipated at the time of original construction or that are to be connected to an existing sewer line not furnished with "stub outs" must be connected using a manufactured saddle and in accordance with accepted plumbing techniques.

    If no stub-out is present an alternate method of joining laterals is shown in the detail on Plan Sheet

790. (For potential future laterals).

The private service lateral stub-outs must be installed as shown on the plan and profile sheets on Plan Sheet 790 and marked after backfilling as shown in the detail on Plan Sheet 790.

14. Trenching, bedding and backfill must conform with 30 TAC §317.2(a)(5). The bedding and backfill for flexible pipe must comply with the standards of ASTM D-2321, Classes IA, IB, II or III. Rigid pipe bedding must comply with the requirements of ASTM C 12 (ANSI A 106.2) classes A, B or C.

15. Sewer lines must be tested from manhole to manhole. When a new sewer line is connected to an existing stub or clean-out, it must be tested from existing manhole to new manhole. If a stub or clean-out is used at the end of the proposed sewer line, no private service attachments may be connected between the last manhole and the cleanout unless it can be certified as conforming with the provisions of 30 TAC §213.5(c)(3)(E).

16. All sewer lines must be tested in accordance with 30 TAC §317.2(a)(4). The engineer must retain copies of all test results which must be made available to the executive director upon request. The engineer must certify in writing that all wastewater lines have passed all required testing to the appropriate regional office within 30 days of test completion and prior to use of the new collection system. Testing method will be:

(A) Infiltration or Exfiltration Tests. The total exfiltration as determined by a hydrostatic head test, must not exceed 50 gallons per inch diameter per mile of pipe per 24 hours at a minimum test head of two feet above the crown of the pipe at the upstream manhole. When pipes are installed below the groundwater level an infiltration test must be used in lieu of the exfiltration test. The total infiltration, as determined by a hydrostatic head test, must not exceed 50 gallons per inch diameter per mile of pipe per 24 hours at a minimum test head of two feet above the crown of the pipe at the upstream manhole, or at least two feet above existing groundwater level, whichever is greater. For construction within the 25 year flood plain, the infiltration or exfiltration must not exceed 10 gallons per inch diameter per mile of pipe per 24 hours at the same minimum test head. If the quantity of infiltration or exfiltration exceeds the maximum quantity specified, remedial action must be undertaken in order to reduce the infiltration or exfiltration to an amount within the limits specified.

(B) Low Pressure Air Test. The procedure for the low pressure air test must conform to the procedures described in ASTM C-828, ASTM C-924, ASTM F-1417 or other appropriate procedures, except for testing times. The test times must be as outlined in this section. For sections of pipe less than 36-inch average inside diameter, the following procedure must apply unless the pipe is to be joint tested. The pipe must be pressurized to 3.5 psi greater than the pressure exerted by groundwater above the pipe. Once the pressure is stabilized, the minimum time allowable for the pressure to drop from 3.5 pounds per square inch gauge to 2.5 pounds per square inch gauge must be computed from the following equation:

where:

$$T = \frac{0.085xDxK}{Q}$$

T = time for pressure to drop 1.0 pound per square inch gauge in seconds
K = 0.000419 X D X L, but not less than 1.0
D = average inside pipe diameter in inches
L = length of line of same size being tested, in feet
Q = rate of loss, 0.0015 cubic feet per minute per square foot internal surface

will be used.

Since a K value of less than 1.0 will not be used, there are minimum times for each pipe diameter as outlined below:

Pipe Diameter (inches)	Minimum Time (seconds)	Length for Minimum (feet)	Time for Longer Length (seconds)
6	340	398	0.855(L)
8	454	298	1.520(L)
10	567	239	2.374(L)
12	680	199	3.419(L)
15	850	159	5.342(L)
18	1020	133	7.693(L)
21	1190	114	10.471(L)
24	1360	100	13.676(L)
27	1530	88	17.309(L)
30	1700	80	21.369(L)
33	1870	72	25.856(L)

The test may be stopped if no pressure loss has occurred during the first 25% of the calculated testing time. If any pressure loss or leakage has occurred during the first 25% of the testing period, then the test must continue for the entire test duration as outlined above or until failure. Lines with a 27-inch average inside diameter and larger may be air tested at each joint. Pipe greater than 36 inch diameter must be tested for leakage at each joint. If the joint test is used, a visual inspection of the joint must be performed immediately after testing. The pipe is to be pressurized to 3.5 psi greater than the pressure exerted by groundwater above the pipe. Once the pressure has stabilized, the minimum time allowable for the pressure to drop from 3.5 pounds per square inch gauge to 2.5 pounds per square inch gauge must be 10 seconds.

(C) Deflection Testing. Deflection tests must be performed on all flexible pipes. For pipelines with inside diameters less than 27 inches, a rigid mandrel must be used to measure deflection. For pipelines with an inside diameter of 27 inches and greater, a method approved by the executive director must be used to test for vertical deflections. Other methods must provide a precision of ± two tenths of one percent (0.2 %) deflection. The test must be conducted after the final backfill has been in place at least 30 days. No pipe will exceed a deflection of five percent. If a pipe should fail to pass the deflection test, the problem must be corrected and a second test must be conducted after the final backfill has been in place an additional 30 days. The tests must be performed without mechanical pulling devices. The design engineer should recognize that this is a maximum deflection criterion for all pipes and a deflection test less than five percent may be more appropriate for specific types and sizes of pipe. Upon completion of construction, the design engineer or other Texas Licensed Professional Engineer appointed by the owner must certify, to

the Executive Director, that the entire installation has passed the deflection test. This certification may be made in conjunction with the notice of completion required in §317.1(e)(1) of this title (relating to General Provisions). This certification must be provided for the Commission to consider the requirements of the approval to have been met.

(i) The rigid mandrel shall have an outside diameter (O.D.) equal to 95% of the inside diameter (I.D.) of the pipe. The inside diameter of the pipe, for the purpose of determining the outside diameter of the mandrel, shall be the average outside diameter minus two minimum wall thicknesses for O.D. controlled pipe and the average inside diameter for I.D. controlled pipe, all dimensions shall be per appropriate standard. Statistical or other "tolerance packages" shall not be considered in mandrel sizing.

(ii) The rigid mandrel shall be constructed of a metal or a rigid plastic material that can withstand 200 psi without being deformed. The mandrel shall have nine or more "runners" or "legs" as long as the total number of legs is an odd number. The barrel section of the mandrel shall have a length of at least 75% of the inside diameter of the pipe. A proving ring shall be provided and used for each size mandrel in use.

(iii) Adjustable or flexible mandrels are prohibited. A television inspection is not a substitute for the deflection test. A deflectometer may be approved for use on a case by case basis. Mandrels with removable legs or runners may be accepted on a case by case basis.

17. All manholes must be tested to meet or exceed the requirements of 30 TAC §317.2(c)(5)(H).

18. All private service laterals must be inspected and certified in accordance with 30 TAC §213.5(c)(3)(I). After installation of and, prior to covering and connecting a private service lateral to an existing organized sewage collection system, a Texas Licensed Professional Engineer, Texas Registered Sanitarian, or appropriate city inspector must visually inspect the private service lateral and the connection to the sewage collection system, and certify that it is constructed in conformity with the applicable provisions of this section. The owner of the collection system must maintain such certifications for five years and forward copies to the appropriate regional office upon request. Connections may only be made to an approved sewage collection system.

THESE GENERAL CONSTRUCTION NOTES MUST BE INCLUDED ON THE CONSTRUCTION PLANS PROVIDED TO THE CONTRACTOR AND ALL SUBCONTRACTORS.

TNRCC-0574

FEE APPLICATION FORM

Texas Natural Resource Conservation Commission
Edwards Aquifer Protection Plan
Application Fee Form

NAME OF PROPOSED REGULATED ENTITY: SH45/US 183 Interchange, Parmer Lane to Ridgeline
REGULATED ENTITY LOCATION: TXDOT ROW
NAME OF CUSTOMER: Texas Turnpike Authority
CONTACT PERSON: Phillip E. Russell, P.E. PHONE: 512-936-0903
(Please Print)

Customer Reference Number (if issued): CN _____ (nine digits)
Regulated Entity Reference Number (if issued): RN _____ (nine digits)

AUSTIN REGIONAL OFFICE (3373)
- ☐ Hays
- ☒ Travis
- ☐ Williamson

SAN ANTONIO REGIONAL OFFICE (3362)
- ☐ Bexar
- ☐ Comal
- ☐ Kinney
- ☐ Medina
- ☐ Uvalde

APPLICATION FEES MUST BE PAID BY CHECK, CERTIFIED CHECK, OR MONEY ORDER, PAYABLE TO THE TEXAS NATURAL RESOURCE CONSERVATION COMMISSION. YOUR CANCELED CHECK WILL SERVE AS YOUR RECEIPT. **THIS FORM MUST BE SUBMITTED WITH YOUR FEE PAYMENT**. THIS PAYMENT IS BEING SUBMITTED TO (CHECK ONE):

☐ **SAN ANTONIO REGIONAL OFFICE**
☐ **Mailed to TNRCC:**
TNRCC - Cashier
Revenues Section
Mail Code 214
P.O. Box 13088
Austin, TX 78711-3088

☒ **AUSTIN REGIONAL OFFICE**
☐ **Overnight Delivery to TNRCC:**
TNRCC - Cashier
12100 Park 35 Circle
Building A, 3rd Floor
Austin, TX 78753
512/239-0347

Type of Plan	Size	Fee Due
Water Pollution Abatement, One Single Family Residential Dwelling	Acres	$
Water Pollution Abatement, Multiple Single Family Residential and Parks	Acres	$
Water Pollution Abatement, Non-residential	168 Acres	$
Sewage Collection System	3208 LF.	$
Lift Stations without sewer lines	Acres	$
Underground or Aboveground Storage Tank Facility	Tanks	$
Piping System(s)(only)	Each	$
Exception	Each	$
Extension of Time	Each	$

_____
Signature Date

Individuals are entitled to request and review their personal information that the agency gathers on its forms. They may also have any errors in their information corrected. To review such information, contact us at 512/239-3282.

Texas Natural Resource Conservation Commission
Edwards Aquifer Protection Program
Application Fee Schedule
30 TAC §213.14 (effective 11/14/97) & 30 TAC §213.9 (effective 6/1/99)

Water Pollution Abatement Plans and Modifications

PROJECT	PROJECT AREA IN ACRES	FEE
One Single Family Residential Dwelling	<5	$500
Multiple Single Family Residential and Parks	<5 5 < 10 10 < 50 ≥50	$1,000 $2,000 $3,000 $5,000
Non-residential (Commercial, industrial, institutional, multi-family residential, schools, and other sites where regulated activities will occur)	< 1 1 < 5 5 < 10 ≥10	$2,000 $3,000 $4,000 $5,000

Organized Sewage Collection Systems and Modifications

PROJECT	COST PER LINEAR FOOT	MINIMUM FEE MAXIMUM FEE
Sewage Collection Systems	$0.50	$500 - $5,000

Underground and Aboveground Storage Tank System Facility Plans and Modifications

PROJECT	COST PER TANK OR PIPING SYSTEM	MINIMUM FEE MAXIMUM FEE
Underground and Aboveground Storage Tank Facility	$500	$500 - $5,000

Exception Requests

PROJECT	FEE
Exception Request	$250

Extension of Time Requests

PROJECT	FEE
Extension of Time Request	$100

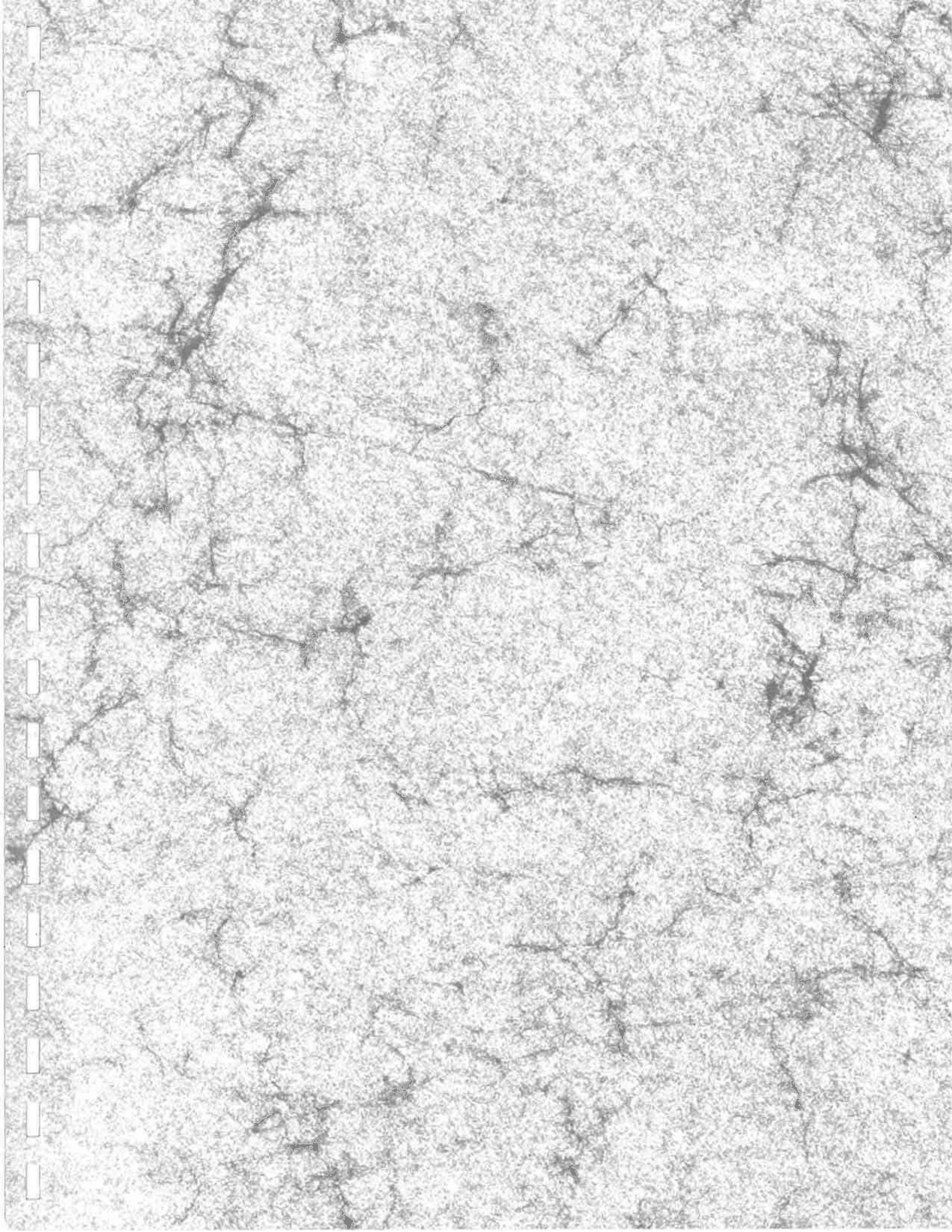

Scale: 200.000000:1.000000
Plotted on: 17-FEB-2003 12:20

Pen Table: I:\Jobs\32058\techprod\rdwy\plots\32058n.pen
Design Filename: \\sgnw00\pnwork\Jobs\32058\TECHPROD\Util\WPAP\dwgs\wpapcv01.dgn

COUNTY _____ PROJ. NO. _____
HWY. NO. _____ LETTING DATE _____
DATE ACCEPTED _____

	FED. RD. DIV. NO.	FEDERAL AID PROJECT NO.		SHEET NO.
LETTING DATE:	6	MG 2002(243)		1
WORK BEGAN:	STATE	STATE DIST. NO.	COUNTY	
DATE ACCEPTED:	TEXAS	14	WILLIAMSON	
CONTRACTOR:	CONT.	SECT.	JOB	HIGHWAY NO.
TOTAL COST:	683	01	069	SH 45

STATE OF TEXAS
DEPARTMENT OF TRANSPORTATION

PLANS OF PROPOSED
STATE HIGHWAY IMPROVEMENTS
FEDERAL-AID PROJECT
SH 45
WILLIAMSON COUNTY
PROJECT NO. MG 2002(243)

DESIGN SPEEDS	
MAIN LANES	70 MPH
FRONTAGE ROADS/CONNECTOR RAMPS	40 MPH
RAMPS	45 MPH

AREA OF DISTURBED SOIL = 238 ACRES

CONTROL CSJ = 0683-01-069
NET LENGTH OF ROADWAY = 8517.54 FT = 1.623 MI
NET LENGTH OF BRIDGE = 4642.25 FT = 0.884 MI
NET LENGTH OF PROJECT = 13159.79 FT = 2.507 MI

LIMITS: FROM RIDGELINE TO WEST OF PARMER LANE.

FOR THE CONSTRUCTION OF AN INTERCHANGE FACILITY.
CONSISTING OF GRADING, DRAINAGE, STRUCTURES, PAVEMENT,
RETAINING WALLS, SIGNING, STRIPING, AND TRAFFIC SIGNALS.

WPAP
CHAPTER 1
ATTACHMENT B

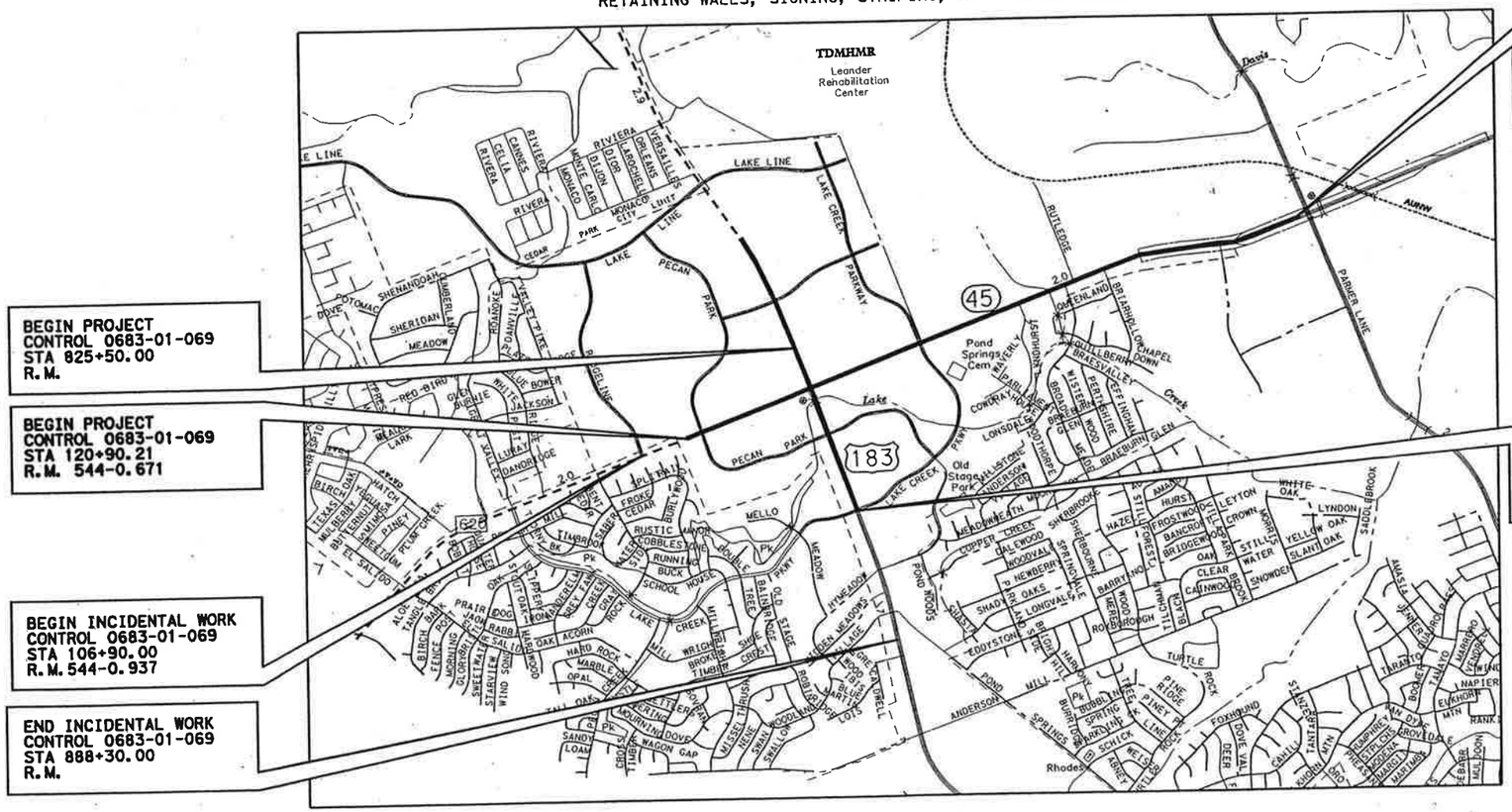

BEGIN PROJECT
CONTROL 0683-01-069
STA 825+50.00
R.M.

BEGIN PROJECT
CONTROL 0683-01-069
STA 120+90.21
R.M. 544-0.671

BEGIN INCIDENTAL WORK
CONTROL 0683-01-069
STA 106+90.00
R.M. 544-0.937

END INCIDENTAL WORK
CONTROL 0683-01-069
STA 888+30.00
R.M.

END PROJECT
CONTROL 0683-01-069
STA 252+50.00
R.M. 546-0.180

END PROJECT
CONTROL 0683-01-069
STA 858+02.00
R.M.

NO SCALE

ATTACHMENT NO. 1-99 TO SPECIAL AGREEMENT FOR CONSTRUCTION, MAINTENANCE AND OPERATIONS OF CONTINUOUS HIGHWAY ILLUMINATION SYSTEM, DATE: DECEMBER 2, 1983.

APPROVED BY
CITY OF AUSTIN _____ 19 ____

EQUATIONS: NONE
EXCEPTIONS: NONE
RAILROADS: NONE

TDLR INSPECTION REQUIRED

SPECIFICATIONS ADOPTED BY THE TEXAS DEPARTMENT OF TRANSPORTATION, MARCH 1, 1993 AND SPECIFICATION ITEMS LISTED AND DATED AS FOLLOWS, SHALL GOVERN ON THIS PROJECT: REQUIRED CONTRACT PROVISIONS FOR ALL FEDERAL-AID CONSTRUCTION CONTRACTS (FORM FHWA 1273, DEC. 1993).

PREPARED BY:
HNTB CORPORATION (DESIGN CONSULTANT)

_____ _____
Charles A. Dodge, P.E. DATE
Project Manager

RECOMMENDED BY
TURNER COLLIE AND BRADEN, INC.

_____ _____
PROJECT MANAGER DATE

RECOMMENDED BY:
TEXAS DEPARTMENT OF TRANSPORTATION

_____ _____
DIRECTOR OF ENGINEERING DATE
TEXAS TURNPIKE AUTHORITY DIVISION

APPROVED BY:
TEXAS DEPARTMENT OF TRANSPORTATION

_____ _____
EXECUTIVE DIRECTOR DATE
TEXAS TURNPIKE AUTHORITY DIVISION

RECOMMENDED BY:
TEXAS DEPARTMENT OF TRANSPORTATION

_____ _____
DIRECTOR OF DESIGN DATE

Texas Department of Transportation
© 2003 (512)416-2055: ALL RIGHTS RESERVED

JOLLYVILLE QUADRANGLE
TEXAS
7.5 MINUTE SERIES (TOPOGRAPHIC)
NE/4 LAKE TRAVIS 15' QUADRANGLE

ROUND ROCK, TEX.
SW/4 ROUND ROCK 15' QUADRANGLE
N3030—W9737.5/7.5

PFLUGERVILLE WEST QUADRANGLE
TEXAS
7.5 MINUTE SERIES (TOPOGRAPHIC)

RECHARGE ZONE

Project Ends

Project Begins

IN

ATTACHMENT B
USGS/EDWARDS RECHARGE ZONE MAP

Scale: 200.000000:1.000000
Plotted on: 17-FEB-2003 12:20
Pen Tables: \Jobs\32058\techprod\rdwy\plots\32058h.pen
Design Filename: \\sdmw00\pmwork\Jobs\32058\TECHPROD\Util\WPAP\dwgs\wpapcv02.dgn

COUNTY _____ PROJ. NO. _____
HWY. NO. _____ LETTING DATE _____
DATE ACCEPTED _____

LETTING DATE:	FED. RD. DIV. NO.	FEDERAL AID PROJECT NO.		SHEET NO.
WORK BEGAN:	6	MG 2002(243)		1
DATE ACCEPTED:	STATE	STATE DIST. NO.	COUNTY	
CONTRACTOR:	TEXAS	14	WILLIAMSON	
TOTAL COST:	CONT.	SECT.	JOB	HIGHWAY NO.
	683	01	069	SH 45

STATE OF TEXAS
DEPARTMENT OF TRANSPORTATION

PLANS OF PROPOSED
STATE HIGHWAY IMPROVEMENTS

FEDERAL-AID PROJECT
SH 45
WILLIAMSON COUNTY
PROJECT NO. MG 2002(243)

DESIGN SPEEDS	
MAIN LANES	70 MPH
FRONTAGE ROADS/CONNECTOR RAMPS	40 MPH
RAMPS	45 MPH

AREA OF DISTURBED SOIL = 238 ACRES

CONTROL CSJ = 0683-01-069
NET LENGTH OF ROADWAY = 8517.54 FT = 1.623 MI
NET LENGTH OF BRIDGE = 4642.25 FT = 0.884 MI
NET LENGTH OF PROJECT = 13159.79 FT = 2.507 MI

LIMITS: FROM RIDGELINE TO WEST OF PARMER LANE.

FOR THE CONSTRUCTION OF AN INTERCHANGE FACILITY.
CONSISTING OF GRADING, DRAINAGE, STRUCTURES, PAVEMENT,
RETAINING WALLS, SIGNING, STRIPING, AND TRAFFIC SIGNALS.

WPAP
CHAPTER 2
SITE GEOLOGIC MAPS

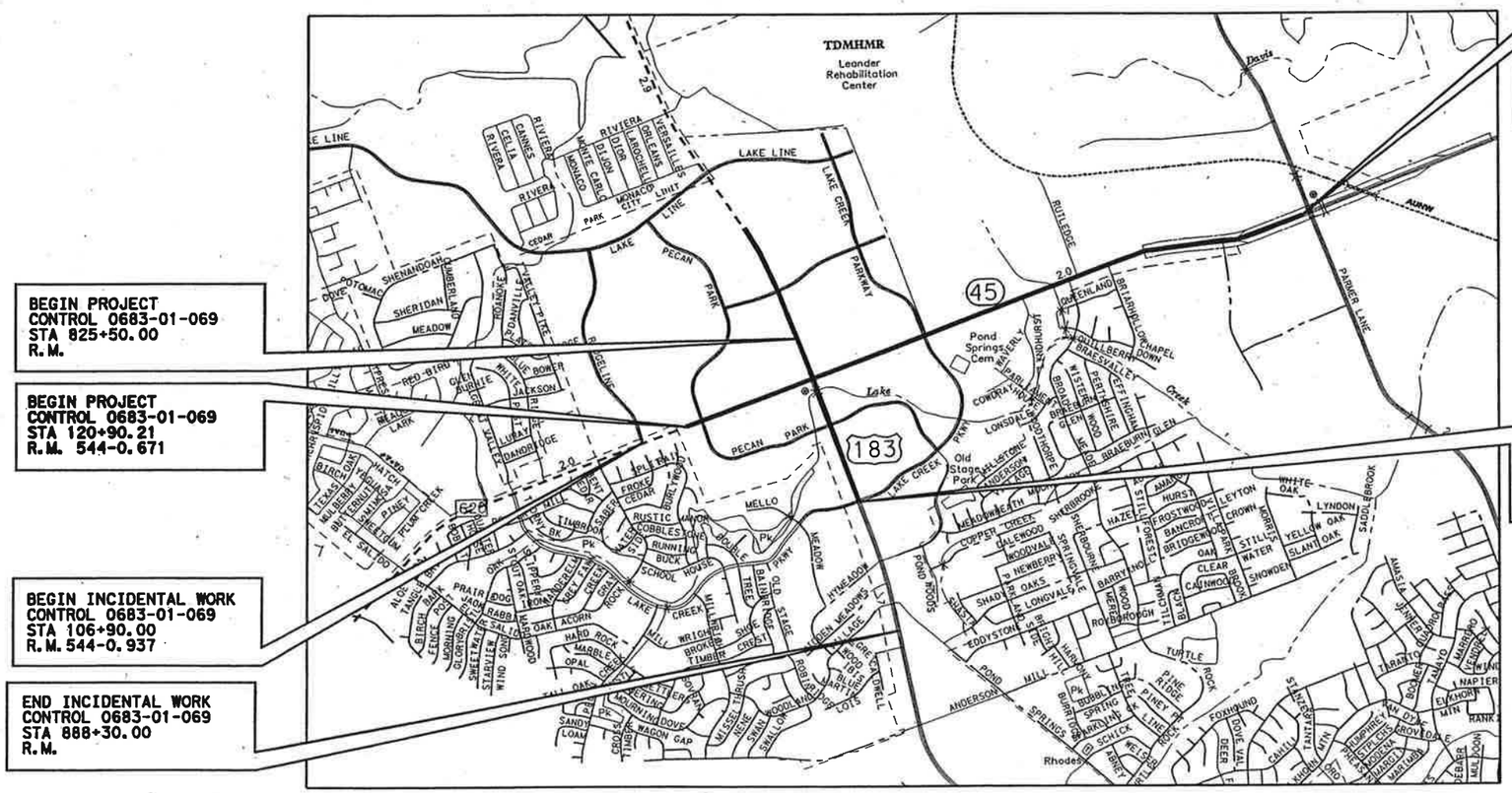

NO SCALE

ATTACHMENT NO. 1-99 TO SPECIAL AGREEMENT FOR CONSTRUCTION, MAINTENANCE AND OPERATIONS OF CONTINUOUS HIGHWAY ILLUMINATION SYSTEM, DATE: DECEMBER 2, 1983.

APPROVED BY
CITY OF AUSTIN _____ 19 ____

EQUATIONS: NONE
EXCEPTIONS: NONE
RAILROADS: NONE

TDLR INSPECTION REQUIRED

SPECIFICATIONS ADOPTED BY THE TEXAS DEPARTMENT OF TRANSPORTATION, MARCH 1, 1993 AND SPECIFICATION ITEMS LISTED AND DATED AS FOLLOWS, SHALL GOVERN ON THIS PROJECT: REQUIRED CONTRACT PROVISIONS FOR ALL FEDERAL-AID CONSTRUCTION CONTRACTS (FORM FHWA 1273, DEC. 1993).

PREPARED BY:
HNTB CORPORATION (DESIGN CONSULTANT)

Charles A. Dodge, P.E.
Project Manager _____ DATE

RECOMMENDED BY
TURNER COLLIE AND BRADEN, INC.

PROJECT MANAGER _____ DATE

RECOMMENDED BY:
TEXAS DEPARTMENT OF TRANSPORTATION

DIRECTOR OF ENGINEERING
TEXAS TURNPIKE AUTHORITY DIVISION _____ DATE

APPROVED BY:
TEXAS DEPARTMENT OF TRANSPORTATION

EXECUTIVE DIRECTOR
TEXAS TURNPIKE AUTHORITY DIVISION _____ DATE

RECOMMENDED BY:
TEXAS DEPARTMENT OF TRANSPORTATION

DIRECTOR OF DESIGN _____ DATE

Texas Department of Transportation
© 2003 (512) 416-2055: ALL RIGHTS RESERVED

SITE GEOLOGIC MAP

S. H. 45 / U. S. 183 Interchange

Site Geologic Maps are included on the Site Plans in Chapter 7

Explanation:

Road Right-of-Way Boundary

Sensitive Features S-4

Geologic Features:

Edwards Formation Outcrop Ked

Geologic Map Source: Garner and Young, 1976, "Environmental Geology of the Austin Area: An Aid to Urban Planning," Bureau of Economic Geology Report of Investigations No. 86.

Scale:
1 inch = 100 feet

Project Begins

Project Ends

SOILS MAP

Scale 1:20000

(Joins inset, sheet 72)

5000 4000 3000 2000 1000 0 0 1 Mile 5000 Feet

Scale: 204.020402:1.000000
Plotted on: 18-MAR-2003 09:45

Pen Table: I:\Jobs\32058\TECHPROD\Rdwy\Plots\32058h.pen
Design Filename: I:\Jobs\32058\techprod\Util\WPAP\dwgs\wpapcv05.dgn

COUNTY _____ PROJ. NO. _____
HWY. NO. _____ LETTING DATE _____
DATE ACCEPTED _____

INDEX OF SHEETS

SHEET NO.	DESCRIPTION
1	TITLE SHEET
2-4	INDEX OF SHEETS
5-10	PROJECT LAYOUTS
11-20	TYPICAL SECTIONS
21	GENERAL NOTES
22	ESTIMATE AND QUANTITY SHEETS
23-74	CONSOLIDATED SUMMARIES
75-207	TRAFFIC CONTROL PLAN SHEETS
208-249	TRAFFIC CONTROL PLAN STANDARDS
250-439	ROADWAY SHEETS
440-472	ROADWAY STANDARDS
473-511	RETAINING WALL & SOUND WALL SHEETS
512-514	RETAINING WALL STANDARDS
515-705	DRAINAGE SHEETS
706-730	DRAINAGE STANDARDS
731-876	UTILITY SHEETS
877-1380	BRIDGE SHEETS
1380-1398	BRIDGE STANDARDS
1399-1441	TRAFFIC SIGNAL SHEETS
1442-1466	TRAFFIC SIGNAL STANDARDS
1467-1481	ILLUMINATION SHEETS
1482-1499	ILLUMINATION STANDARDS
1500-1553	SIGNING SHEETS
1554-1591	SIGNING STANDARDS
1592-1612	PAVEMENT MARKING SHEETS
1613-1624	PAVEMENT MARKING STANDARDS
1625-1635	ITS
1636-1640	ITS STANDARDS
1641-1660	ENVIRONMENTAL SHEETS
1661-1666	ENVIRONMENTAL STANDARDS
1667-1684	LANDSCAPING
1685-1732	AESTHETICS

STATE OF TEXAS
DEPARTMENT OF TRANSPORTATION

PLANS OF PROPOSED
STATE HIGHWAY IMPROVEMENTS

FEDERAL-AID PROJECT
SH 45
WILLIAMSON COUNTY
PROJECT NO. MG 2002(243)

LETTING DATE:	FED. NO. DIV. NO.	FEDERAL AID PROJECT NO.		SHEET NO.
WORK BEGAN:	6	MG 2002(243)		1
DATE ACCEPTED:	STATE	STATE DIST. NO.	COUNTY	
CONTRACTOR:	TEXAS	14	WILLIAMSON	
TOTAL COST:	CONT.	SECT.	JOB	HIGHWAY NO.
	683	01	069	SH 45

DESIGN SPEEDS	
MAIN LANES	70 MPH
FRONTAGE ROADS/CONNECTOR RAMPS	40 MPH
RAMPS	45 MPH

AREA OF DISTURBED SOIL = 238 ACRES

CONTROL CSJ = 0683-01-069
NET LENGTH OF ROADWAY = 8517.54 FT = 1.623 MI
NET LENGTH OF BRIDGE = 4642.25 FT = 0.884 MI
NET LENGTH OF PROJECT = 13159.79 FT = 2.507 MI

LIMITS: FROM RIDGELINE TO WEST OF PARMER LANE.

FOR THE CONSTRUCTION OF AN INTERCHANGE FACILITY.
CONSISTING OF GRADING, DRAINAGE, STRUCTURES, PAVEMENT, RETAINING WALLS, SIGNING, STRIPING, AND TRAFFIC SIGNALS.

WPAP
CHAPTER 5
ATTACHMENT F

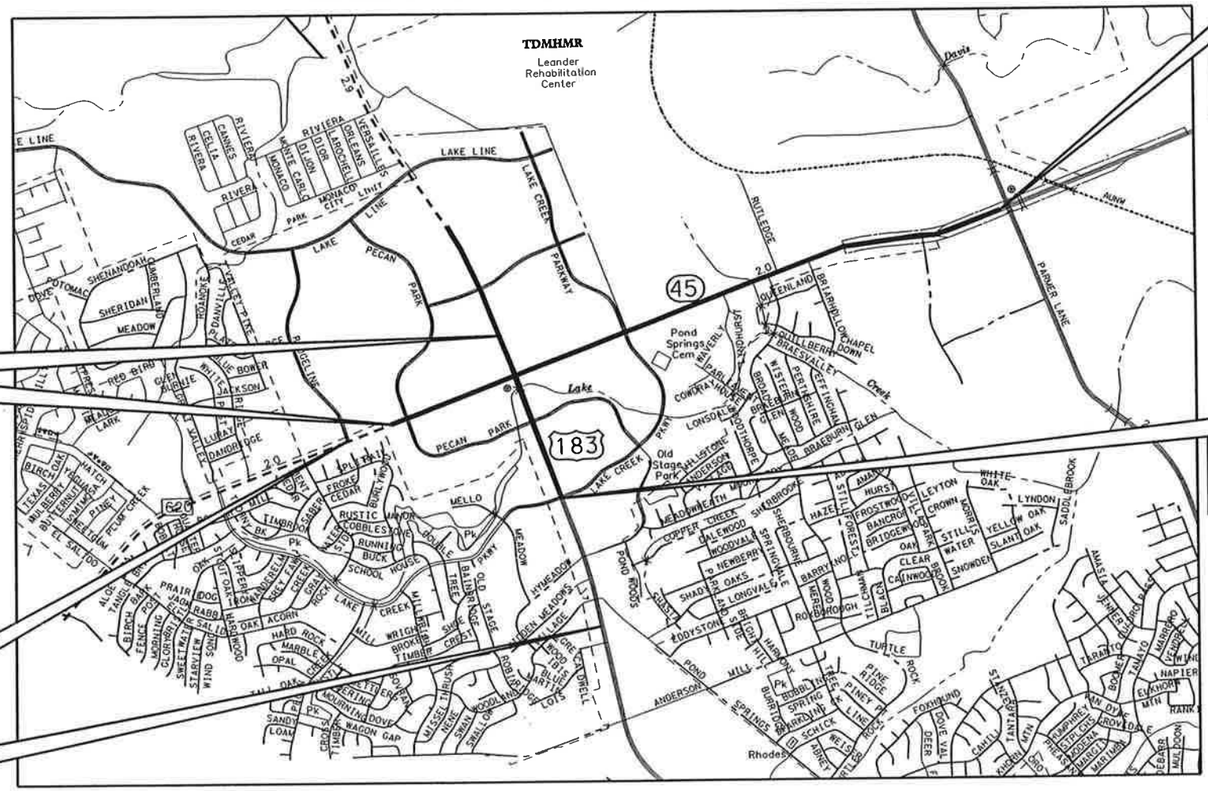

BEGIN PROJECT
CONTROL 0683-01-069
STA 825+50.00
R.M.

BEGIN PROJECT
CONTROL 0683-01-069
STA 120+90.21
R.M. 544-0.671

BEGIN INCIDENTAL WORK
CONTROL 0683-01-069
STA 106+90.00
R.M. 544-0.937

END INCIDENTAL WORK
CONTROL 0683-01-069
STA 888+30.00
R.M.

END PROJECT
CONTROL 0683-01-069
STA 252+50.00
R.M. 546-0.180

END PROJECT
CONTROL 0683-01-069
STA 858+02.00
R.M.

NO SCALE

ATTACHMENT NO. 1-99 TO SPECIAL AGREEMENT FOR CONSTRUCTION, MAINTENANCE AND OPERATIONS OF CONTINUOUS HIGHWAY ILLUMINATION SYSTEM, DATE: DECEMBER 2, 1983.

APPROVED BY
CITY OF AUSTIN _____ 19 ____

EQUATIONS: NONE
EXCEPTIONS: NONE
RAILROADS: NONE

TDLR INSPECTION REQUIRED

SPECIFICATIONS ADOPTED BY THE TEXAS DEPARTMENT OF TRANSPORTATION, MARCH 1, 1993 AND SPECIFICATION ITEMS LISTED AND DATED AS FOLLOWS, SHALL GOVERN ON THIS PROJECT: REQUIRED CONTRACT PROVISIONS FOR ALL FEDERAL-AID CONSTRUCTION CONTRACTS (FORM FHWA 1273, DEC. 1993).

PREPARED BY:
HNTB CORPORATION (DESIGN CONSULTANT)

Charles A. Dodge, P.E.
Project Manager — DATE

RECOMMENDED BY
TURNER COLLIE AND BRADEN, INC.

PROJECT MANAGER — DATE

RECOMMENDED BY:
TEXAS DEPARTMENT OF TRANSPORTATION

DIRECTOR OF ENGINEERING
TEXAS TURNPIKE AUTHORITY DIVISION — DATE

APPROVED BY:
TEXAS DEPARTMENT OF TRANSPORTATION

EXECUTIVE DIRECTOR
TEXAS TURNPIKE AUTHORITY DIVISION — DATE

RECOMMENDED BY:
TEXAS DEPARTMENT OF TRANSPORTATION

DIRECTOR OF DESIGN — DATE

Texas Department of Transportation
© 2003 (512) 416-2055: ALL RIGHTS RESERVED

Scale: 20.000000:1.000000
Plotted on: 26-FEB-2003 01:05

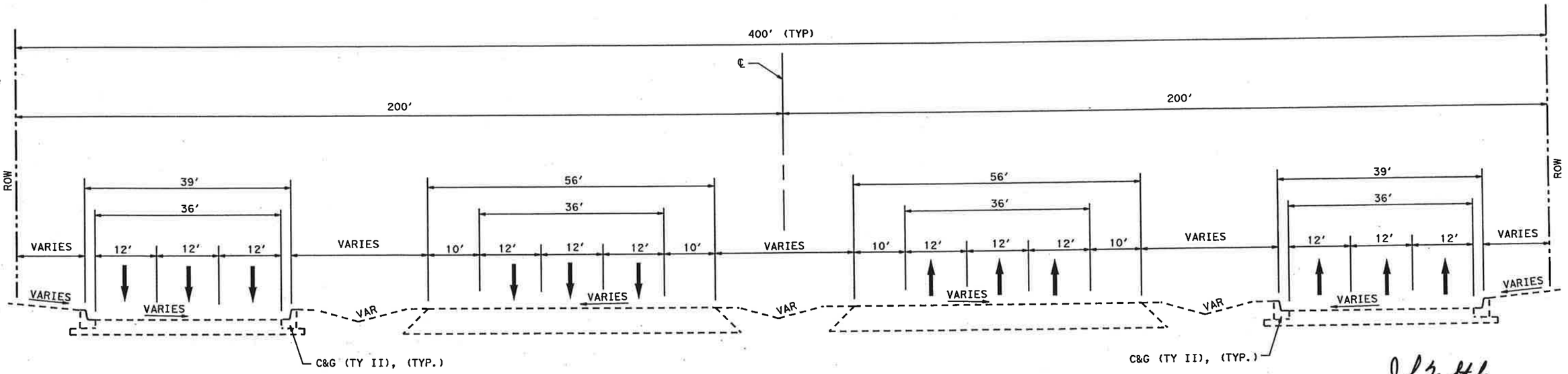

EXIST RM 620 EB & WB DIVIDED SECTION

(MAINLANES AND FRONTAGE ROADS)
STA 223+00 TO 252+50

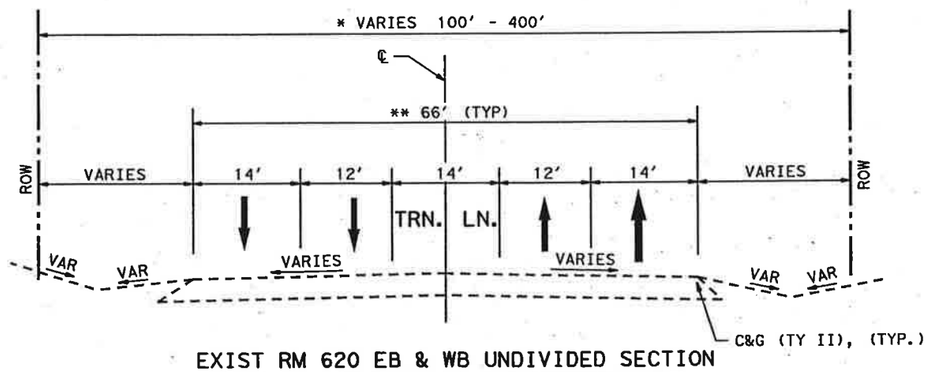

EXIST RM 620 EB & WB UNDIVIDED SECTION

STA 120+00 TO 223+00

* ROW WIDTH TRANSITIONS FROM 100' TO 400' BETWEEN STA 214+00 AND STA 223+00

** ROADWAY WIDTH TRANSITIONS FROM AN UNDIVIDED TO A DIVIDED ROADWAY SECTION BETWEEN STA 214+00 AND STA 223+00

STATE OF TEXAS
JOHN W. STRYBOS
64259
LICENSED
PROFESSIONAL ENGINEER
2-27-2003

EXISTING TYPICAL SECTIONS

SH 45 / US 183 INTERCHANGE

NOT TO SCALE

HNTB ARCHITECTS ENGINEERS PLANNERS
The HNTB Companies

Texas Department of Transportation
© 2003 TEXAS TURNPIKE AUTHORITY DIVISION

DRAWING PREPARED BY:	HNTB CORPORATION			
SHEET 1 OF 1				
FED. RD. DIV. NO.	FEDERAL AID PROJECT NO.			SHEET NO.
6	MG 2002 (243)			11
DGN: CDA	STATE	DIST.	COUNTY	
CHK DSGN: JEG	TEXAS	14	WILLIAMSON	
DRN: JSS	CONT.	SECT.	JOB	HIGHWAY NO.
CHK DRG: CAD	0683	01	069	SH 45

Pen Tablet: I:\Jobs\32058\techprod\rdwy\plots\32058h.pen
Design Filename: I:\Jobs\32058\TECHPROD\Rdwy\Dwg\phs1\45ps0801.dgn

Scale: 20.000000:1.000000
Plotted on: 26-FEB-2003 01:05

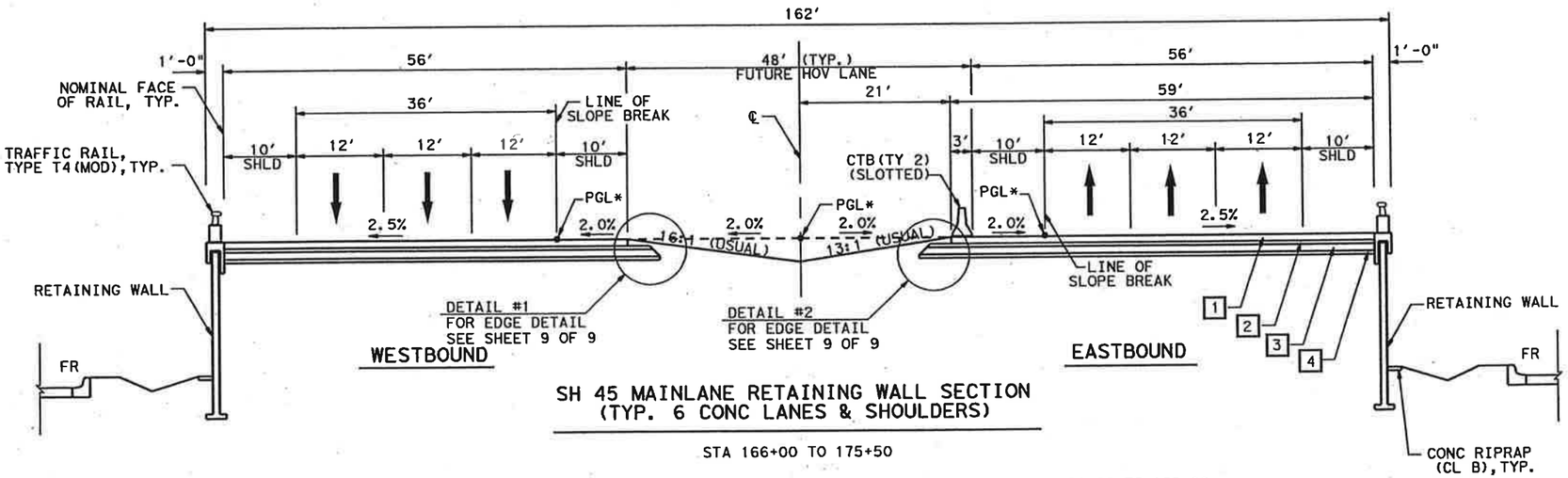

SH 45 MAINLANE RETAINING WALL SECTION (TYP. 6 CONC LANES & SHOULDERS)

STA 166+00 TO 175+50

* FOR EBML PGL IS OFFSET FROM ℄ TO THE INSIDE SHOULDER LINE FROM STA 139+80 TO 169+80
FOR WBML PGL IS OFFSET FROM ℄ TO THE INSIDE SHOULDER LINE FROM STA 137+00 TO 169+00

LEGEND

1. 11" CRCP
2. 6" HMAC (TY A) (2 EQUAL LIFTS)
3. 12" FLEX BASE (TY D) (GR 2) (CL 4) (3 EQUAL LIFTS)
4. 6" LIME TREATED SUBGRADE (TY A) (SLURRY)
5. 2" HMAC (TY C) (SURF)
6. 2" HMAC (TY C)
7. 3" HMAC (TY B)
8. ONE-COURSE SURFACE TREATMENT UNDERSEAL
9. 9" FLEX BASE (TY D) (GR 6) (CL 4) (MIN 2 LIFTS)

NOTES:
1. REFER TO ITEM 132 SPECIFICATION DATA IN THE GENERAL NOTES FOR SPECIAL EMBANKMENT REQUIREMENTS.
2. WITH PRIOR APPROVAL FROM THE ENGINEER, AND AT THE CONTRACTOR'S EXPENSE, A FULL-DEPTH ASPHALT PAVMENT MAY BE USED IN SMALL AREAS SUCH AS CROSS-STREETS AND DRIVEWAYS. IF APPROVED, REPLACE 9" FLEX BASE WITH 10" HMAC (TY A).
3. ALL FLEX BASE SHALL HAVE PRIME COAT APPLIED PRIOR TO PLACING UNDERSEAL OR LAYING FIRST COUSE OF HMAC. REFER TO THE BASIS OF ESTIMATE IN THE GENERAL NOTES FOR APPLICATION RATES.

STATE OF TEXAS
JOHN W. STRYBOS
64259
LICENSED
PROFESSIONAL ENGINEER
2-27-2003

PROPOSED TYPICAL SECTIONS

SH 45 / US 183 INTERCHANGE

NOT TO SCALE

HNTB ARCHITECTS ENGINEERS PLANNERS
The HNTB Companies

Texas Department of Transportation
© 2003 TEXAS TURNPIKE AUTHORITY DIVISION

DRAWING PREPARED BY: HNTB CORPORATION				
SHEET 1 OF 9				
FED. RD. DIV. NO. 6	FEDERAL AID PROJECT NO. MG 2002 (243)			SHEET NO. 12
DGN: CDA	STATE	DIST.	COUNTY	
CHK. DGN: JEG	TEXAS	14	WILLIAMSON	
DWG: JSS	CONT.	SECT.	JOB	HIGHWAY NO.
CHK. DWG: CAD	0683	01	069	SH 45

Pen Table: I:\Jobs\32058\techprod\rdwy\plots\32058h.pen
Design Filename: \\sanw00\pmwork\Jobs\32058\TECHPROD\Rdwy\Dwg\phs1\45ps0803.dgn

Scale: 20.000000x1.000000
Plotted on: 26-FEB-2003 01:05

Pen Table: I:\Jobs\32058\techprod\rdwy\plots\32058h.pen
Design Filename: \\sanw00\pmwork\Jobs\32058\TECHPROD\Rdwy\Dwg\phe1\45ps0804.dgn

SH 45 MAINLANE ROADWAY SECTION (12 CONC LANES & SHOULDERS)

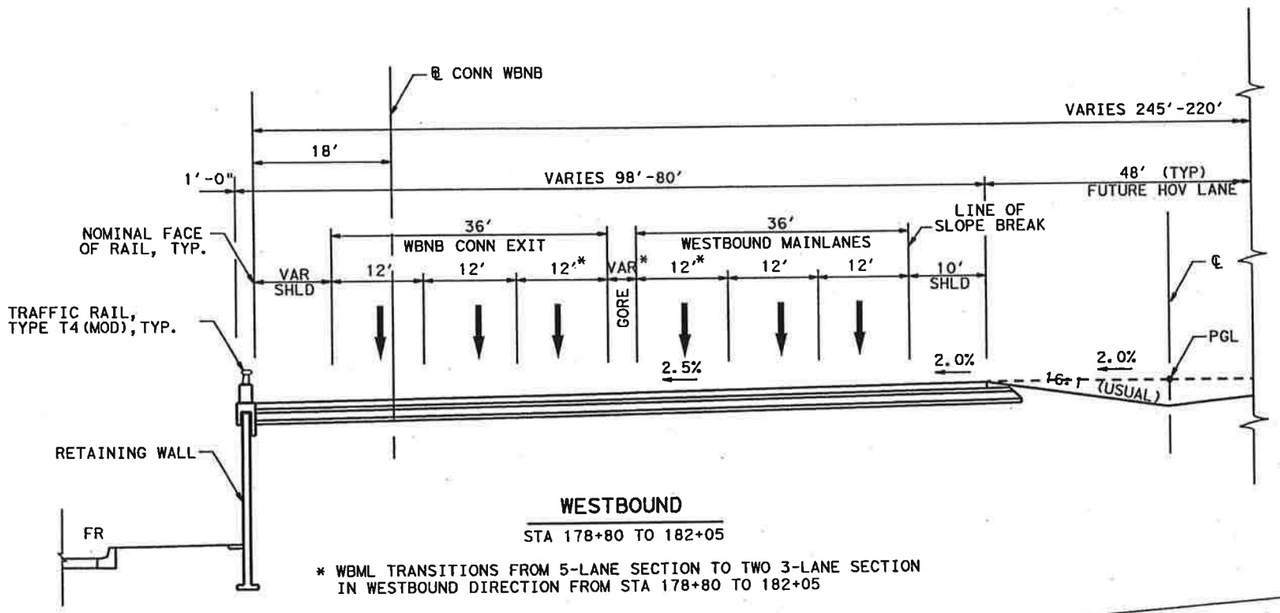

WESTBOUND

STA 178+80 TO 182+05

* WBML TRANSITIONS FROM 5-LANE SECTION TO TWO 3-LANE SECTION IN WESTBOUND DIRECTION FROM STA 178+80 TO 182+05

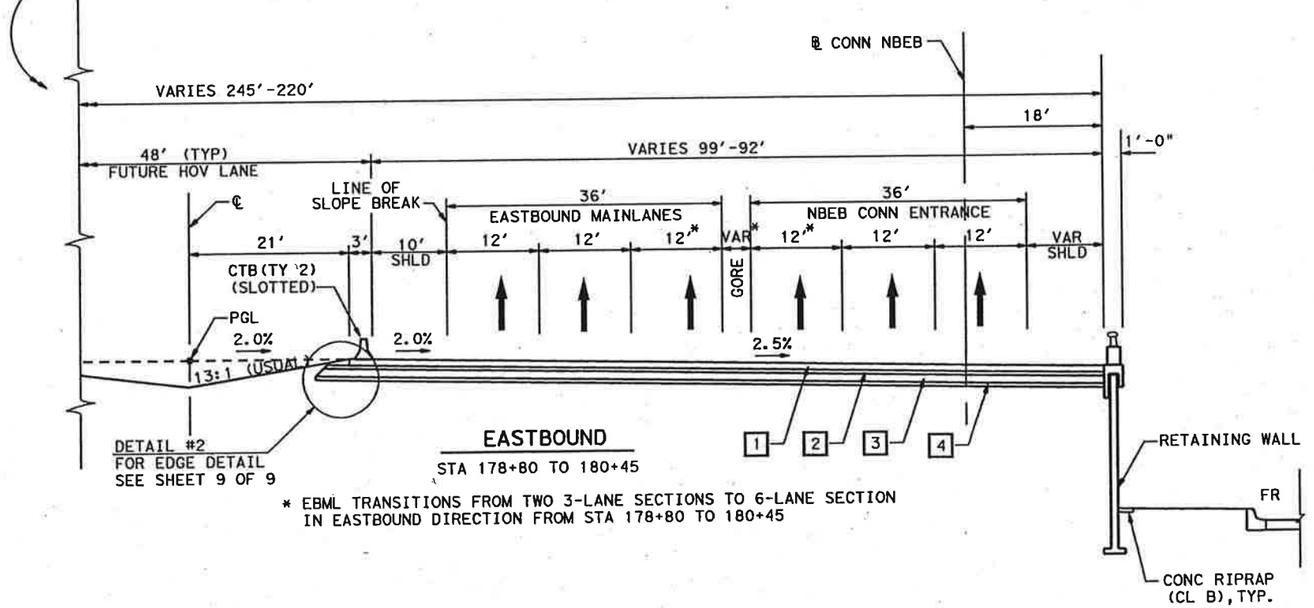

EASTBOUND

STA 178+80 TO 180+45

* EBML TRANSITIONS FROM TWO 3-LANE SECTIONS TO 6-LANE SECTION IN EASTBOUND DIRECTION FROM STA 178+80 TO 180+45

LEGEND

1	11" CRCP
2	6" HMAC(TY A) (2 EQUAL LIFTS)
3	12" FLEX BASE (TY D)(GR 2)(CL 4) (3 EQUAL LIFTS)
4	6" LIME TREATED SUBGRADE (TY A)(SLURRY)
5	2" HMAC(TY C)(SURF)
6	2" HMAC(TY C)
7	3" HMAC(TY B)
8	ONE-COURSE SURFACE TREATMENT UNDERSEAL
9	9" FLEX BASE (TY D)(GR 6)(CL 4) (MIN 2 LIFTS)

NOTES:
1. REFER TO ITEM 132 SPECIFICATION DATA IN THE GENERAL NOTES FOR SPECIAL EMBANKMENT REQUIREMENTS.
2. WITH PRIOR APPROVAL FROM THE ENGINEER, AND AT THE CONTRACTOR'S EXPENSE, A FULL-DEPTH ASPHALT PAVMENT MAY BE USED IN SMALL AREAS SUCH AS CROSS-STREETS AND DRIVEWAYS. IF APPROVED, REPLACE 9" FLEX BASE WITH 10" HMAC(TY A).
3. ALL FLEX BASE SHALL HAVE PRIME COAT APPLIED PRIOR TO PLACING UNDERSEAL OR LAYING FIRST COUSE OF HMAC. REFER TO THE BASIS OF ESTIMATE IN THE GENERAL NOTES FOR APPLICATION RATES.

STATE OF TEXAS
JOHN W. STRYBOS
64259
LICENSED PROFESSIONAL ENGINEER
2-27-2003

PROPOSED TYPICAL SECTIONS

SH 45 / US 183 INTERCHANGE

NOT TO SCALE

HNTB ARCHITECTS ENGINEERS PLANNERS
The HNTB Companies

Texas Department of Transportation
© 2003 TEXAS TURNPIKE AUTHORITY DIVISION

DRAWING PREPARED BY:	HNTB CORPORATION			
SHEET 2 OF 9				
FED. RD. DIV. NO.	FEDERAL AID PROJECT NO.			SHEET NO.
6	MG 2002 (243)			13
DGN: CDA	STATE	DIST.	COUNTY	
CHK: JEG	TEXAS	14	WILLIAMSON	
DWN: JSS	CONT.	SECT.	JOB	HIGHWAY NO.
CHK: CAD	0683	01	069	SH 45

Scale: 20.000000:1.000000
Plotted on: 26-FEB-2003 01:05

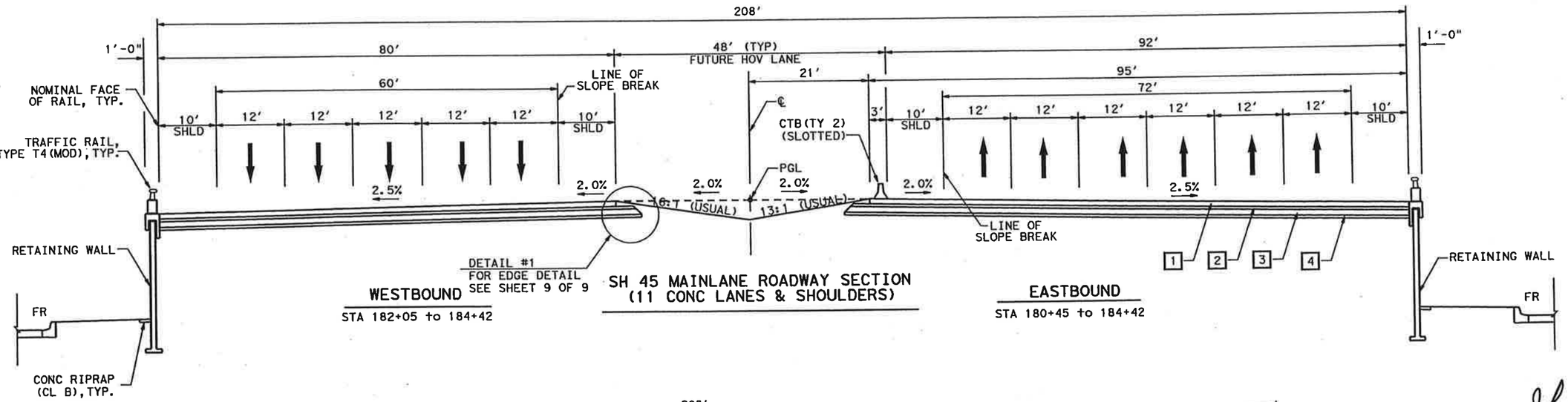

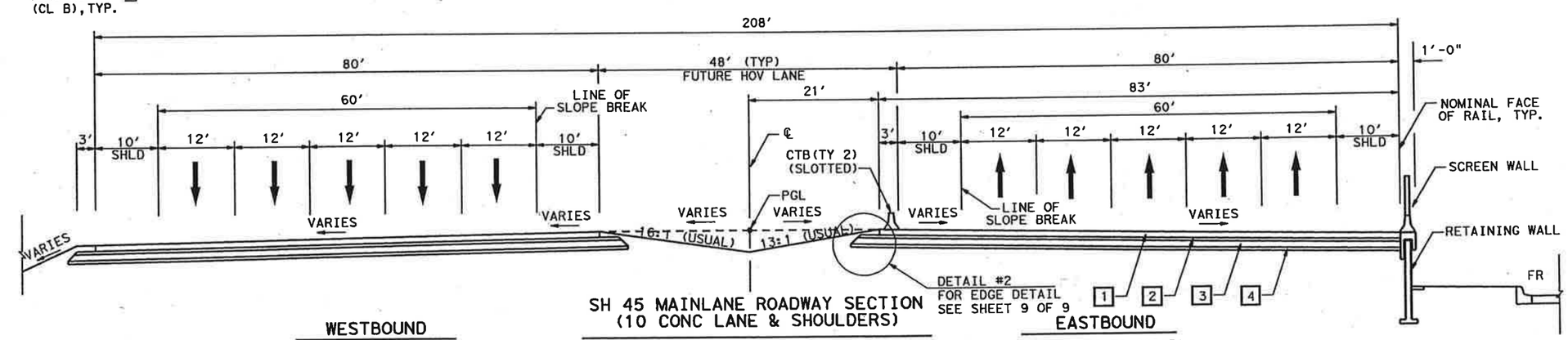

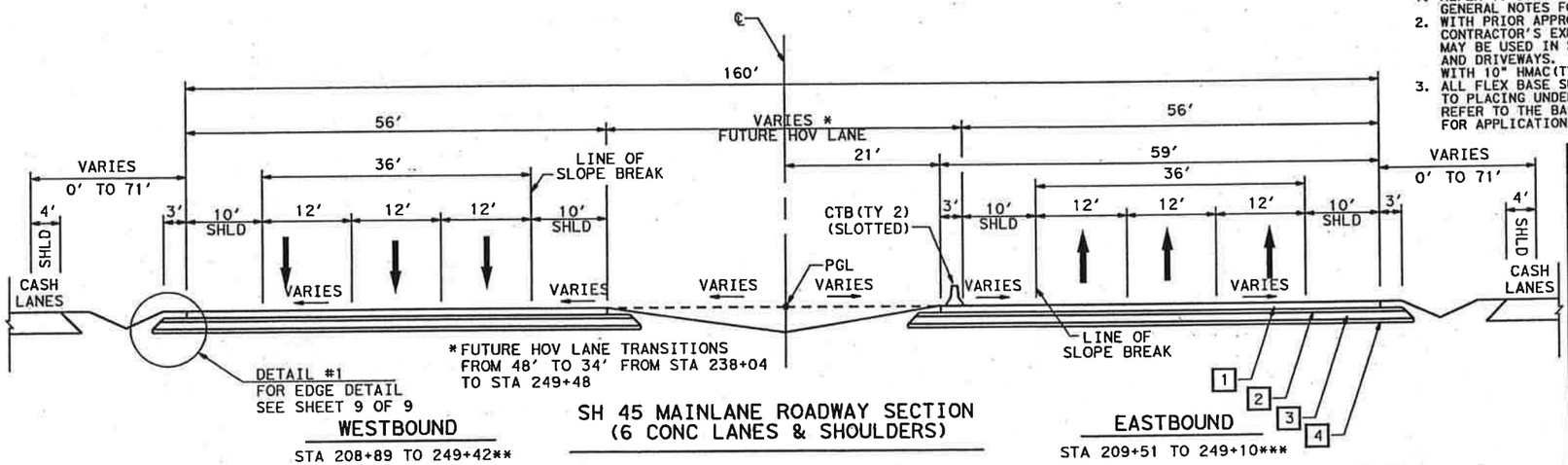

** WBML TRANSITIONS FROM 3 AVI LANES AND VARIABLE WIDTH CASH LANES TO 5 THRU LANES IN WESTBOUND DIRECTION FROM STA 208+89 TO 224+63. WBML TRANSITIONS FROM 5 LANE SECTION TO 3 AVI LANES AND VARIABLE WIDTH CASH LANES IN WESTBOUND DIRECTION FROM STA 238+44 TO 249+42.

*** EBML TRANSITIONS FROM 5 THRU LANES TO 3 AVI LANES AND VARIABLE WIDTH CASH LANES IN EASTBOUND DIRECTION FROM STA 209+55 TO 224+63. EBML TRANSITIONS FROM 3 AVI LANES AND VARIABLE WIDTH CASH LANES TO 5 THRU LANES IN EASTBOUND DIRECTION FROM STA 232+93 TO 249+10.

NOTES:
1. REFER TO ITEM 132 SPECIFICATION DATA IN THE GENERAL NOTES FOR SPECIAL EMBANKMENT REQUIREMENTS.
2. WITH PRIOR APPROVAL FROM THE ENGINEER, AND AT THE CONTRACTOR'S EXPENSE, A FULL-DEPTH ASPHALT PAVMENT MAY BE USED IN SMALL AREAS SUCH AS CROSS-STREETS AND DRIVEWAYS. IF APPROVED, REPLACE 9" FLEX BASE WITH 10" HMAC(TY A).
3. ALL FLEX BASE SHALL HAVE PRIME COAT APPLIED PRIOR TO PLACING UNDERSEAL OR LAYING FIRST COUSE OF HMAC. REFER TO THE BASIS OF ESTIMATE IN THE GENERAL NOTES FOR APPLICATION RATES.

LEGEND

1	11" CRCP
2	6" HMAC(TY A) (2 EQUAL LIFTS)
3	12" FLEX BASE (TY D)(GR 2)(CL 4) (3 EQUAL LIFTS)
4	6" LIME TREATED SUBGRADE (TY A)(SLURRY)
5	2" HMAC(TY C)(SURF)
6	2" HMAC(TY C)
7	3" HMAC(TY B)
8	ONE-COURSE SURFACE TREATMENT UNDERSEAL
9	9" FLEX BASE (TY D)(GR 6)(CL 4) (MIN 2 LIFTS)



2-25-2003

PROPOSED TYPICAL SECTIONS

SH 45 / US 183 INTERCHANGE

NOT TO SCALE

HNTB ARCHITECTS ENGINEERS PLANNERS
The HNTB Companies

Texas Department of Transportation

© 2003 TEXAS TURNPIKE AUTHORITY DIVISION

DRAWING PREPARED BY: HNTB CORPORATION				
SHEET 3 OF 9				
FED. RD. DIV. NO.	FEDERAL AID PROJECT NO.			SHEET NO.
6	MG 2002 (243)			14
DGN: CDA	STATE	DIST.	COUNTY	
CHK: JEG	TEXAS	14	WILLIAMSON	
DWN: JSS	CONT.	SECT.	JOB	HIGHWAY NO.
CHK: CAD	0683	01	069	SH 45

Pen Table: I:\Jobs\32058\techprod\rdwy\plot\32058h.pen
Design Filename: I:\Jobs\32058\TECHPROD\Rdwy\Dwg\phel\45ps0805.dgn

Scale: 20.000000:1.000000
Plotted on: 26-FEB-2003 01:05

NOTES:
1. REFER TO ITEM 132 SPECIFICATION DATA IN THE GENERAL NOTES FOR SPECIAL EMBANKMENT REQUIREMENTS.
2. WITH PRIOR APPROVAL FROM THE ENGINEER, AND AT THE CONTRACTOR'S EXPENSE, A FULL-DEPTH ASPHALT PAVMENT MAY BE USED IN SMALL AREAS SUCH AS CROSS-STREETS AND DRIVEWAYS. IF APPROVED, REPLACE 9" FLEX BASE WITH 10" HMAC(TY A).
3. ALL FLEX BASE SHALL HAVE PRIME COAT APPLIED PRIOR TO PLACING UNDERSEAL OR LAYING FIRST COUSE OF HMAC. REFER TO THE BASIS OF ESTIMATE IN THE GENERAL NOTES FOR APPLICATION RATES.

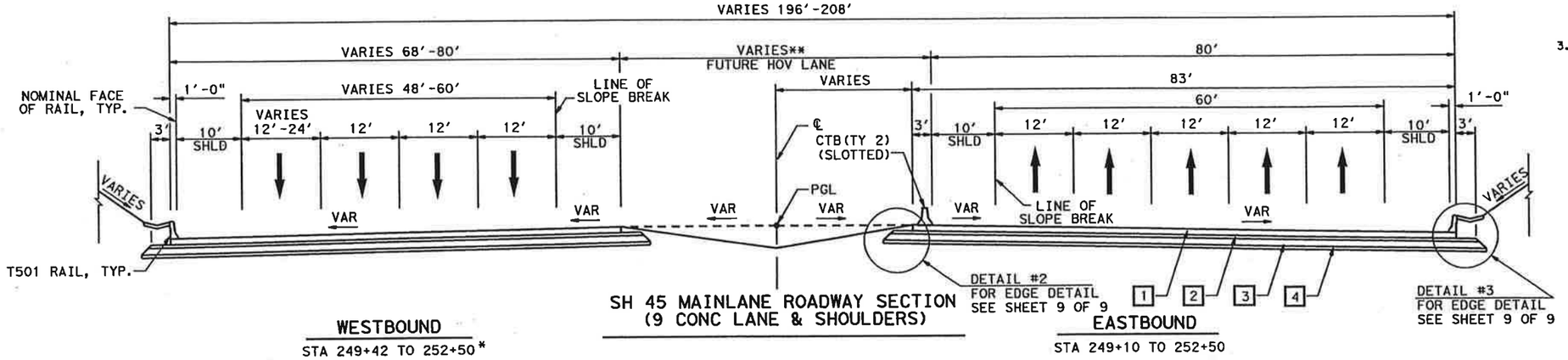

SH 45 MAINLANE ROADWAY SECTION (9 CONC LANE & SHOULDERS)

WESTBOUND
STA 249+42 TO 252+50*

EASTBOUND
STA 249+10 TO 252+50

*WBML TRANSITIONS FROM 4 LANE SECTION TO 5 LANE SECTION IN WESTBOUND DIRECTION FROM STA 249+42 TO 252+45

**FUTURE HOV LANE TRANSITIONS FROM 48' TO 34' FROM STA 238+04 TO 249+48

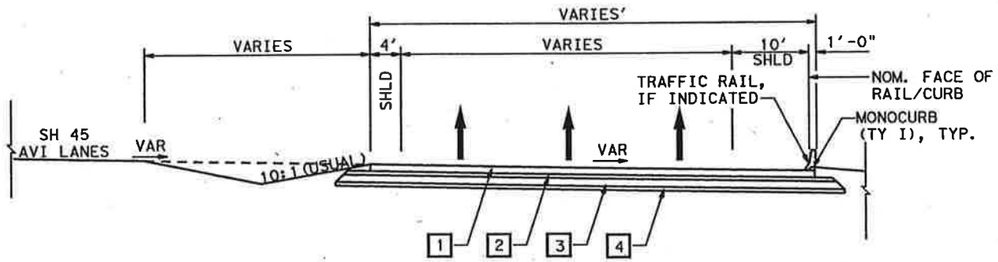

SH 45 CASH LANE SECTION

EBML STA 214+00 TO 242+10
WBML STA 213+40 TO 246+27

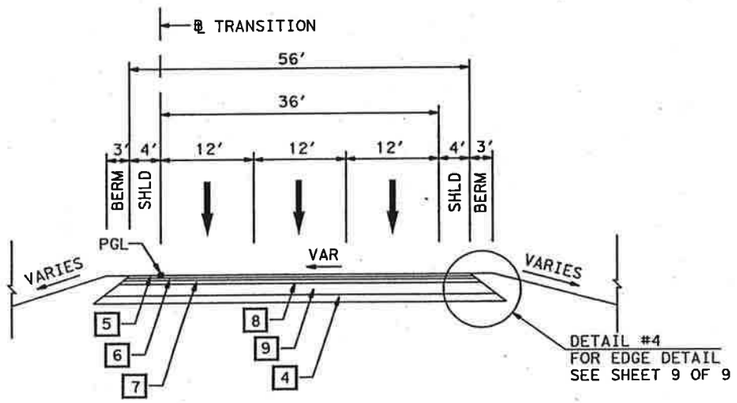

SH 45 WESTBOUND TRANSITION TO EXIST RM 620 (3 LANES & SHOULDERS)

STA 120+90 TO 127+00

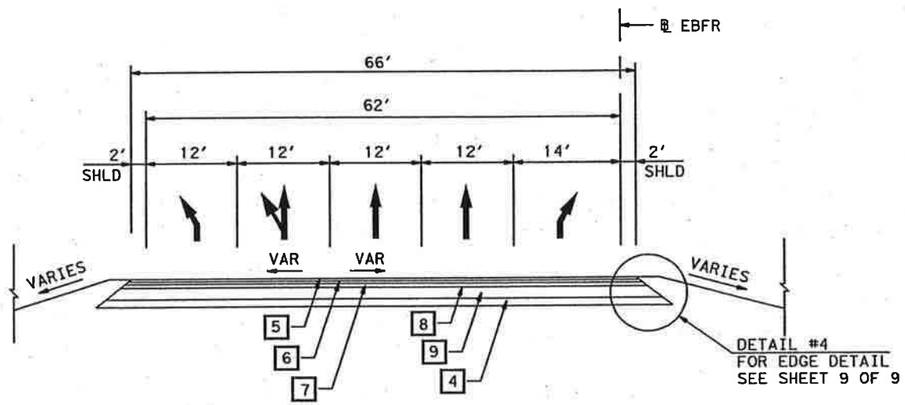

SH 45 EASTBOUND FR RD TRANSITION TO EXIST RM 620 (5 LANES & SHOULDERS)

STA 124+52 TO 127+72

FULL-DEPTH RECONSTRUCTION TO ELIMINATE CROWN AND MATCH EBFR CROSS-SLOPE AT STA 127+72

LEGEND

1	11" CRCP
2	6" HMAC(TY A) (2 EQUAL LIFTS)
3	12" FLEX BASE (TY D)(GR 2)(CL 4) (3 EQUAL LIFTS)
4	6" LIME TREATED SUBGRADE (TY A)(SLURRY)
5	2" HMAC(TY C)(SURF)
6	2" HMAC(TY C)
7	3" HMAC(TY B)
8	ONE-COURSE SURFACE TREATMENT UNDERSEAL
9	9" FLEX BASE (TY D)(GR 6)(CL 4) (MIN 2 LIFTS)



2-27-2003

PROPOSED TYPICAL SECTIONS

SH 45 / US 183 INTERCHANGE

NOT TO SCALE

HNTB ARCHITECTS ENGINEERS PLANNERS
The HNTB Companies

Texas Department of Transportation
© 2003 TEXAS TURNPIKE AUTHORITY DIVISION

DRAWING PREPARED BY:	HNTB CORPORATION			
SHEET 4 OF 9				
FED. RD. DIV. NO.	FEDERAL AID PROJECT NO.			SHEET NO.
6	MG 2002 (243)			15
DGN: CDA	STATE	DIST.	COUNTY	
CHK. DGN: JEG	TEXAS	14	WILLIAMSON	
DW: JSS	CONT.	SECT.	JOB	HIGHWAY NO.
CHK. DW: CAD	0683	01	069	SH 45

Pen Table: I:\Jobs\32058\techprod\rdwy\plots\32058h.pen
Design Filename: I:\Jobs\32058\TECHPROD\Rdwy\Dwg\phs1\45ps0806.dgn

Scale: 20.000000:1.000000
Plotted on: 26-FEB-2003 01:05

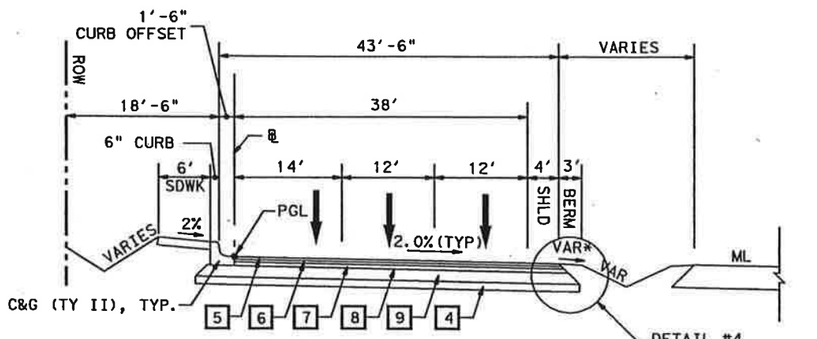

SH 45 FRONTAGE ROAD (TYP. 3 LANE & SHOULDER)

WBFR 126+00 TO 129+00
209+00 TO 244+00 **

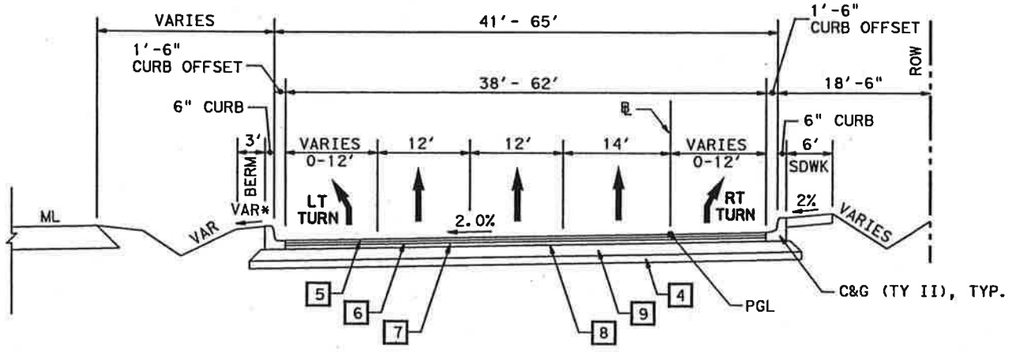

SH 45 FRONTAGE ROAD (TYP. 3 LANE; WITH LT TURN AND/OR RT TURN)

EBFR 127+72 to 136+00
147+00 TO 155+50
168+00 TO 176+00

WBFR 129+00 TO 140+00
152+50 TO 159+65
178+50 TO 185+22 **

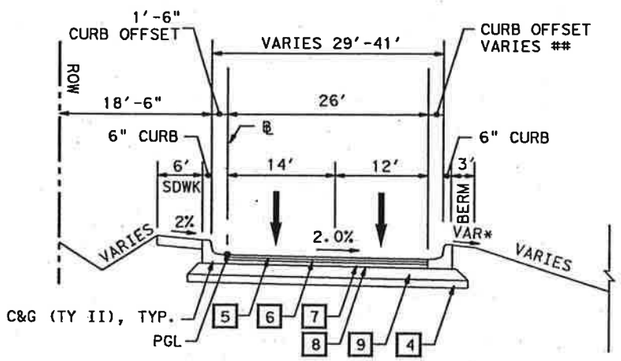

SH 45 FRONTAGE ROAD (TYP. 2 LANE & CURB)

WBFR 140+00 TO 152+50

STA 146+00 TO 149+60 CURB OFFSET TAPERS FROM 1'-6" TO 13'-6" STA 149+60 TO 152+50 CURB OFFSET REMAINS CONSTANT AT 13'-6"

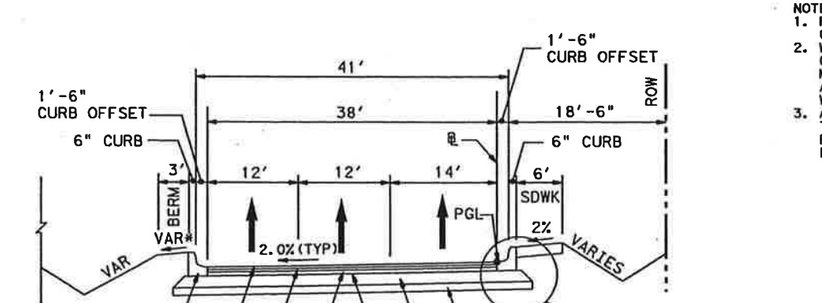

SH 45 FRONTAGE ROAD (TYP. 3 LANE & CURBS)

EBFR 136+00 TO 147+00
155+50 TO 168+00
176+00 TO 251+61**

WBFR 166+53 TO 178+50
185+22 TO 209+00**
244+00 TO 253+08**

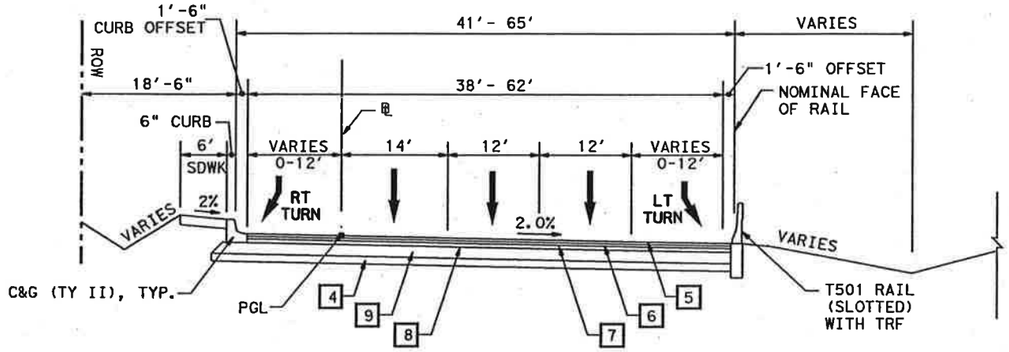

SH 45 FRONTAGE ROAD (TYP. 3 LANE; WITH LT TURN AND/OR RT TURN)

WBFR 159+65 TO 166+53

NOTES:

* 3' BERM SLOPE MAY BE ± 2%, REFER TO DETAILED X-SECTIONS FOR SLOPES AT SPECIFIC LOCATIONS

** SIDEWALK WILL NOT BE PLACED BETWEEN STA 179+25 AND END OF PROJECT, REPLACE WITH 6' BERM.

NOTES:
1. REFER TO ITEM 132 SPECIFICATION DATA IN THE GENERAL NOTES FOR SPECIAL EMBANKMENT REQUIREMENTS.
2. WITH PRIOR APPROVAL FROM THE ENGINEER, AND AT THE CONTRACTOR'S EXPENSE, A FULL-DEPTH ASPHALT PAVMENT MAY BE USED IN SMALL AREAS SUCH AS CROSS-STREETS AND DRIVEWAYS. IF APPROVED, REPLACE 9" FLEX BASE WITH 10" HMAC(TY A).
3. ALL FLEX BASE SHALL HAVE PRIME COAT APPLIED PRIOR TO PLACING UNDERSEAL OR LAYING FIRST COUSE OF HMAC. REFER TO THE BASIS OF ESTIMATE IN THE GENERAL NOTES FOR APPLICATION RATES.

LEGEND

1. 11" CRCP
2. 6" HMAC(TY A) (2 EQUAL LIFTS)
3. 12" FLEX BASE (TY D) (GR 2) (CL 4) (3 EQUAL LIFTS)
4. 6" LIME TREATED SUBGRADE (TY A) (SLURRY)
5. 2" HMAC(TY C) (SURF)
6. 2" HMAC(TY C)
7. 3" HMAC(TY B)
8. ONE-COURSE SURFACE TREATMENT UNDERSEAL
9. 9" FLEX BASE (TY D) (GR 6) (CL 4) (MIN 2 LIFTS)

STATE OF TEXAS
JOHN W. STRYBOS
64259
LICENSED
PROFESSIONAL ENGINEER
2-27-2003

PROPOSED TYPICAL SECTIONS

SH 45 / US 183 INTERCHANGE

NOT TO SCALE

HNTB ARCHITECTS ENGINEERS PLANNERS
The HNTB Companies

Texas Department of Transportation
© 2003 TEXAS TURNPIKE AUTHORITY DIVISION

DRAWING PREPARED BY: HNTB CORPORATION				
SHEET 5 OF 9				
FED. RD. DIV. NO.	FEDERAL AID PROJECT NO.			SHEET NO.
6	MG 2002 (243)			16
DGN: CDA	STATE	DIST.	COUNTY	
CHK DGN: JEG	TEXAS	14	WILLIAMSON	
DWN: JSS	CONT.	SECT.	JOB	HIGHWAY NO.
CHK DWN: CAD	0683	01	069	SH 45

Pen Tables: I:\Jobs\32058\techprod\rdwy\plots\32058h.pen
Design Filename: I:\Jobs\32058\TECHPROD\Rdwy\Dwg\phe1\45pse0807.dgn

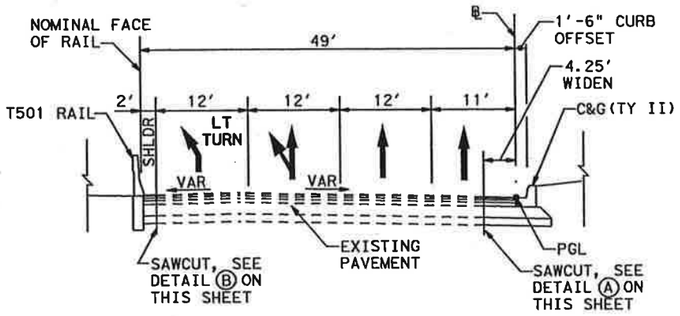

SH 45 EASTBOUND FRONTAGE RD (BETWEEN SBFR AND NBFR)

EBFR 152+03 TO 154+83

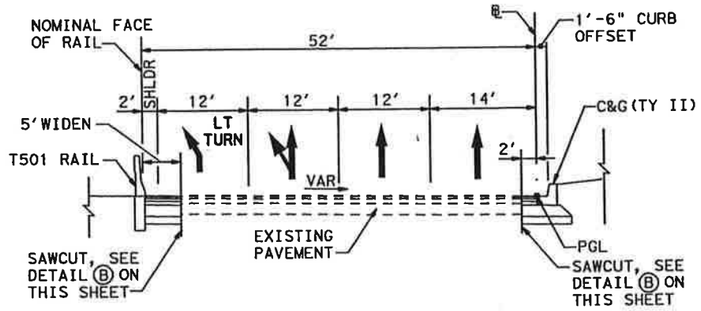

US 183 SOUTHBOUND FRONTAGE RD (BETWEEN WBFR AND EBFR)

SBFR 829+20 TO 831+92

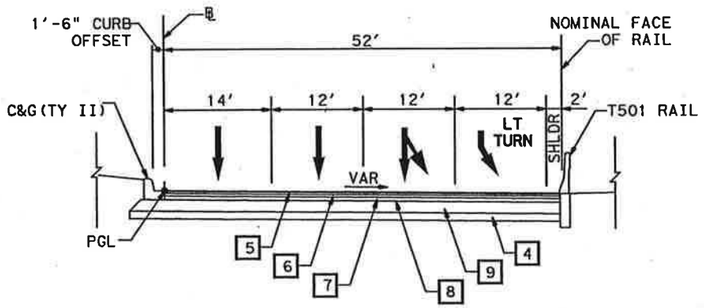

SH 45 WESTBOUND FRONTAGE RD (BETWEEN SBFR AND NBFR)

WBFR 152+22 TO 156+02

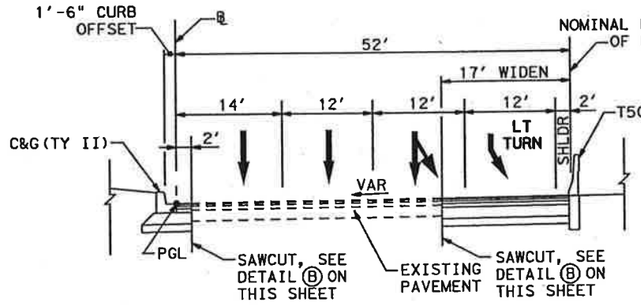

US 183 NORTHBOUND FRONTAGE RD (BETWEEN WBFR AND EBFR)

NBFR 829+35 TO 832+02

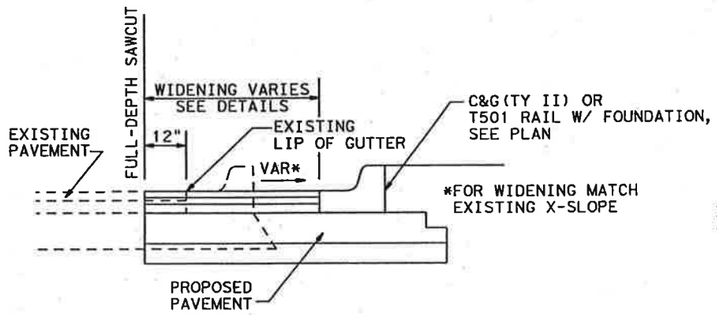

(A) WIDENING DETAIL OUTSIDE EXISTING C&G

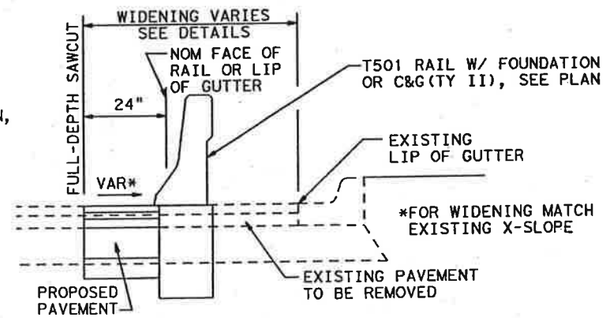

(B) WIDENING DETAIL INSIDE EXISTING C&G

NOTES:
1. REFER TO ITEM 132 SPECIFICATION DATA IN THE GENERAL NOTES FOR SPECIAL EMBANKMENT REQUIREMENTS.
2. WITH PRIOR APPROVAL FROM THE ENGINEER, AND AT THE CONTRACTOR'S EXPENSE, A FULL-DEPTH ASPHALT PAVMENT MAY BE USED IN SMALL AREAS SUCH AS CROSS-STREETS AND DRIVEWAYS. IF APPROVED, REPLACE 9" FLEX BASE WITH 10" HMAC(TY A).
3. ALL FLEX BASE SHALL HAVE PRIME COAT APPLIED PRIOR TO PLACING UNDERSEAL OR LAYING FIRST COUSE OF HMAC. REFER TO THE BASIS OF ESTIMATE IN THE GENERAL NOTES FOR APPLICATION RATES.

LEGEND

1	11" CRCP
2	6" HMAC(TY A) (2 EQUAL LIFTS)
3	12" FLEX BASE (TY D)(GR 2)(CL 4) (3 EQUAL LIFTS)
4	6" LIME TREATED SUBGRADE (TY A)(SLURRY)
5	2" HMAC(TY C)(SURF)
6	2" HMAC(TY C)
7	3" HMAC(TY B)
8	ONE-COURSE SURFACE TREATMENT UNDERSEAL
9	9" FLEX BASE (TY D)(GR 6)(CL 4) (MIN 2 LIFTS)

STATE OF TEXAS
JOHN W. STRYBOS
64259
LICENSED
PROFESSIONAL ENGINEER
2-27-2003

PROPOSED TYPICAL SECTIONS

SH 45 / US 183 INTERCHANGE

NOT TO SCALE

HNTB ARCHITECTS ENGINEERS PLANNERS
The HNTB Companies

Texas Department of Transportation
© 2003 TEXAS TURNPIKE AUTHORITY DIVISION

DRAWING PREPARED BY:	HNTB CORPORATION			
SHEET 6 OF 9				
FED. RD. DIV. NO.	FEDERAL AID PROJECT NO.			SHEET NO.
6	MG 2002 (243)			17
DGN: CDA	STATE	DIST.	COUNTY	
CHK: JEG	TEXAS	14	WILLIAMSON	
DSN: JSS	CONT.	SECT.	JOB	HIGHWAY NO.
CHK: CAD	0683	01	069	SH 45

Scale: 20.000000:1.000000
Plotted on: 26-FEB-2003 01:06
Pen Tables: \Jobs\32058\techprod\rdwy\plots\32058h.pen
Design Filename: \\sanw00\pmwork\Jobs\32058\TECHPROD\Rdwy\Dwg\phs1\45ps0807a.dgn

Scale: 20.000000:1.000000
Plotted on: 26-FEB-2003 01:06

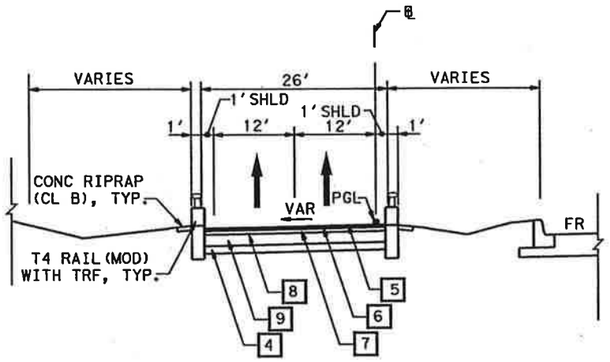

SH 45 ASPH. RAMP
(T4 RAIL (MOD) SECTION)

RAMP B STA 14+89.55 TO 15+42.76

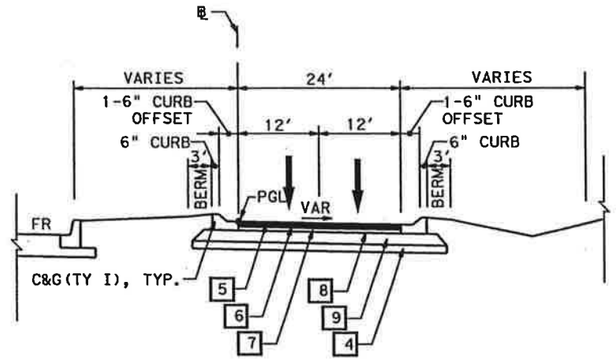

SH 45 ASPH. RAMP
(TY 1 CURB AND GUTTER SECTION)

RAMP C STA 13+81.22 TO 14+08.75

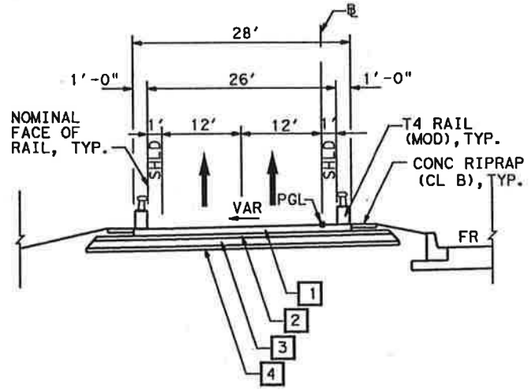

SH 45 CONC. RAMP
(T4 RAIL (MOD) SECTION)

RAMP B STA 15+42.76 TO 15+85.73
RAMP C STA 14+08.75 TO 15+55.43

NOTES:
1. REFER TO ITEM 132 SPECIFICATION DATA IN THE GENERAL NOTES FOR SPECIAL EMBANKMENT REQUIREMENTS.
2. WITH PRIOR APPROVAL FROM THE ENGINEER, AND AT THE CONTRACTOR'S EXPENSE, A FULL-DEPTH ASPHALT PAVMENT MAY BE USED IN SMALL AREAS SUCH AS CROSS-STREETS AND DRIVEWAYS. IF APPROVED, REPLACE 9" FLEX BASE WITH 10" HMAC(TY A).
3. ALL FLEX BASE SHALL HAVE PRIME COAT APPLIED PRIOR TO PLACING UNDERSEAL OR LAYING FIRST COUSE OF HMAC. REFER TO THE BASIS OF ESTIMATE IN THE GENERAL NOTES FOR APPLICATION RATES.

LEGEND

1	11" CRCP
2	6" HMAC(TY A) (2 EQUAL LIFTS)
3	12" FLEX BASE (TY D)(GR 2)(CL 4) (3 EQUAL LIFTS)
4	6" LIME TREATED SUBGRADE (TY A)(SLURRY)
5	2" HMAC(TY C)(SURF)
6	2" HMAC(TY C)
7	3" HMAC(TY B)
8	ONE-COURSE SURFACE TREATMENT UNDERSEAL
9	9" FLEX BASE (TY D)(GR 6)(CL 4) (MIN 2 LIFTS)



2-27-2003

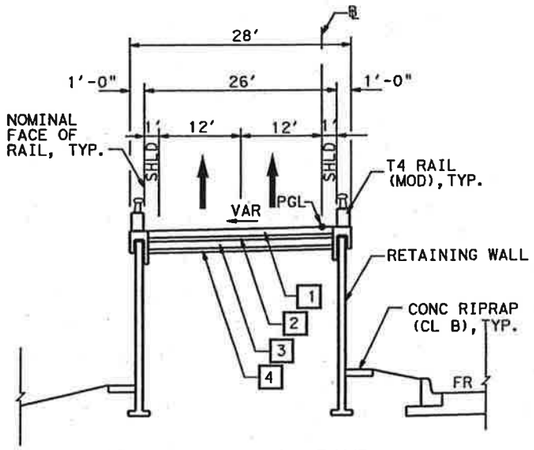

SH 45 CONC. RAMP
(RETAINING WALL SECTION)

RAMP B STA 15+85.73 TO ABUTMENT
RAMP C STA 15+55.43 TO ABUTMENT

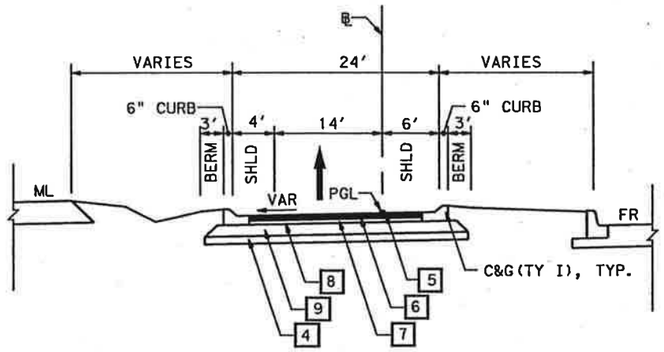

SH 45 ASPH. RAMP
(TY I CURB AND GUTTER SECTION)

RAMP D STA 17+05.79 TO 17+25.82
RAMP E STA 16+16.60 TO 16+36.58
RAMP F STA 26+98.83 TO 27+18.83
RAMP G STA 23+88.25 TO 24+08.29

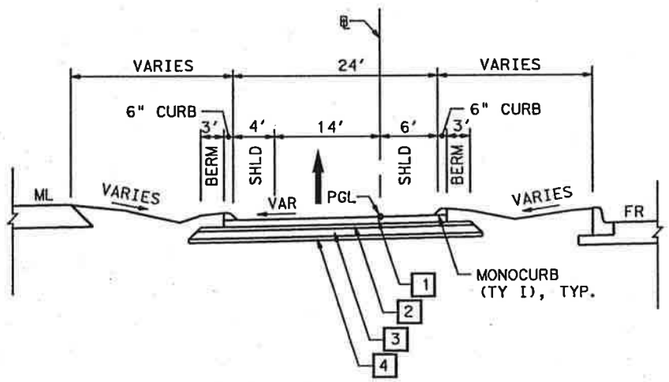

SH 45 CONC. RAMP
(TY I MONOCURB SECTION)

RAMP D STA 17+25.82 TO 22+29.96
RAMP E STA 16+36.58 TO 23+74.60
RAMP F STA 16+71.43 TO 26+98.83
RAMP G STA 16+73.53 TO 23+88.25

PROPOSED TYPICAL SECTIONS

SH 45 / US 183 INTERCHANGE

NOT TO SCALE

HNTB ARCHITECTS ENGINEERS PLANNERS
The HNTB Companies

Texas Department of Transportation
© 2003 TEXAS TURNPIKE AUTHORITY DIVISION

DRAWING PREPARED BY: HNTB CORPORATION				
SHEET 7 OF 9				
FED. RD. DIV. NO.	FEDERAL AID PROJECT NO.			SHEET NO.
6	MG 2002 (243)			18
DGN: CDA	STATE	DIST.	COUNTY	
CHK: JEG	TEXAS	14	WILLIAMSON	
DWN: JSS	CONT.	SECT.	JOB	HIGHWAY NO.
CHK: CAD	0683	01	069	SH 45

Pen Tables: \Jobs\32058\techprod\rdwy\plots\32058h.pen
Design Filename: I:\Jobs\32058\TECHPROD\Rdwy\Dwg\phe1\45pse0808.dgn

Scale: 20.000000:1.000000
Plotted on: 26-FEB-2003 01:06

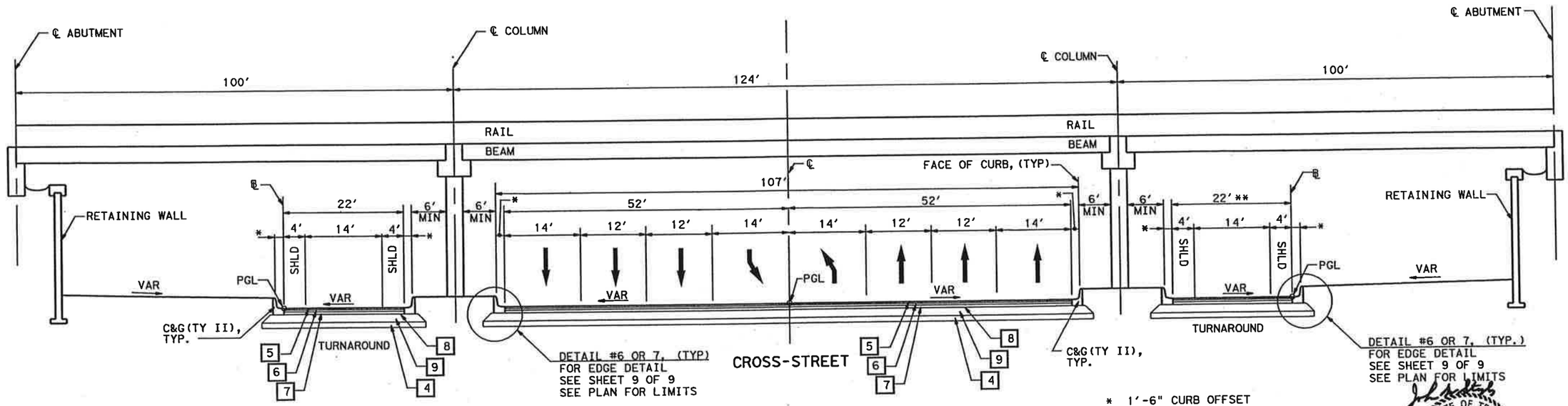

SH 45 CROSS-STREET SECTION (TYPICAL 8 LANE; INCLUDES LEFT TURNS, TURNAROUNDS)

(AT PECAN PARK BOULEVARD, CROSS-STREET & TURNAROUNDS)
(AT N. LAKE CREEK PARKWAY, CROSS-STREET & TURNAROUNDS)
(SH 45 AT US 183, TURNAROUNDS ONLY)

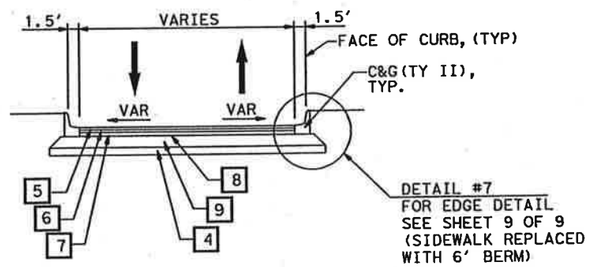

SH 45 CROSS-STREET SECTION (TYPICAL 2 LANE)

LYNDHURST
BROADMEADE
BRIAR HOLLOW
AMBERGLEN
BRIARWICK
RUTLEDGE SPUR
TOM KEMP LANE

NOTES:
1. REFER TO ITEM 132 SPECIFICATION DATA IN THE GENERAL NOTES FOR SPECIAL EMBANKMENT REQUIREMENTS.
2. WITH PRIOR APPROVAL FROM THE ENGINEER, AND AT THE CONTRACTOR'S EXPENSE, A FULL-DEPTH ASPHALT PAVMENT MAY BE USED IN SMALL AREAS SUCH AS CROSS-STREETS AND DRIVEWAYS. IF APPROVED, REPLACE 9" FLEX BASE WITH 10" HMAC(TY A).
3. ALL FLEX BASE SHALL HAVE PRIME COAT APPLIED PRIOR TO PLACING UNDERSEAL OR LAYING FIRST COUSE OF HMAC. REFER TO THE BASIS OF ESTIMATE IN THE GENERAL NOTES FOR APPLICATION RATES.

LEGEND

1. 11" CRCP
2. 6" HMAC(TY A) (2 EQUAL LIFTS)
3. 12" FLEX BASE (TY D)(GR 2)(CL 4) (3 EQUAL LIFTS)
4. 6" LIME TREATED SUBGRADE (TY A)(SLURRY)
5. 2" HMAC(TY C)(SURF)
6. 2" HMAC(TY C)
7. 3" HMAC(TY B)
8. ONE-COURSE SURFACE TREATMENT UNDERSEAL
9. 9" FLEX BASE (TY D)(GR 6)(CL 4) (MIN 2 LIFTS)

JOHN W. STRYBOS 64259 LICENSED PROFESSIONAL ENGINEER STATE OF TEXAS
2-27-2003

PROPOSED TYPICAL SECTIONS

SH 45 / US 183 INTERCHANGE

NOT TO SCALE

HNTB ARCHITECTS ENGINEERS PLANNERS
The HNTB Companies

Texas Department of Transportation
© 2003 TEXAS TURNPIKE AUTHORITY DIVISION

DRAWING PREPARED BY:	HNTB CORPORATION			
SHEET 8 OF 9				
FED. RD. DIV. NO.	FEDERAL AID PROJECT NO.			SHEET NO.
6	MG 2002 (243)			19
DGN: CDA	STATE	DIST.	COUNTY	
CHK DGN: JEG	TEXAS	14	WILLIAMSON	
DWN: JSS	CONT.	SECT.	JOB	HIGHWAY NO.
CHK DWG: CAD	0683	01	069	SH 45

Pen Table: I:\Jobs\32058\techprod\rdwy\plots\32058h.pen
Design Filename: I:\Jobs\32058\TECHPROD\Rdwy\Dwg\phe1\45pe0809.dgn

Scale: 20.000000:1.000000
Plotted on: 26-FEB-2003 01:06

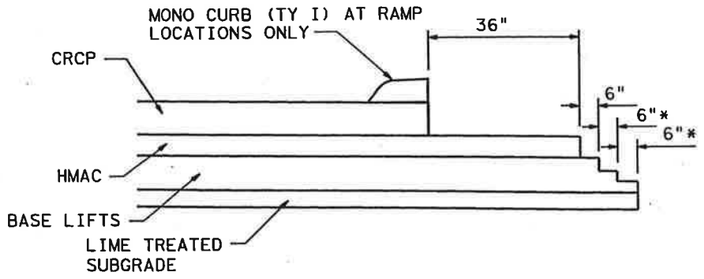

* EACH BASE LIFT WILL BE WIDENED AT 6" (TYP).

1 BASE WIDENING INCREMENTS ADJACENT TO MAIN LANE PAVEMENT

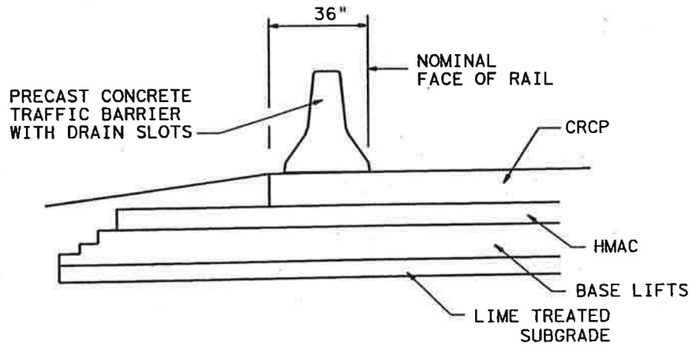

2 MAIN LANE PAVEMENT EDGE DETAIL (WITH CTB)

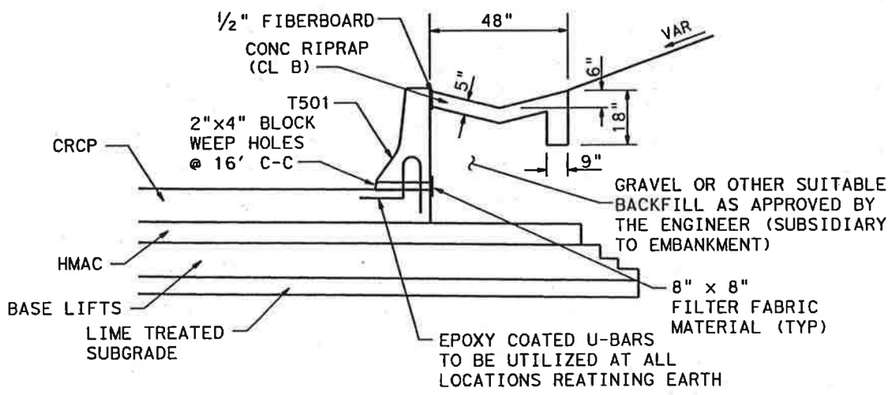

3 MAIN LANE PAVEMENT EDGE DETAIL (WITH T501 RETAINING EARTH)

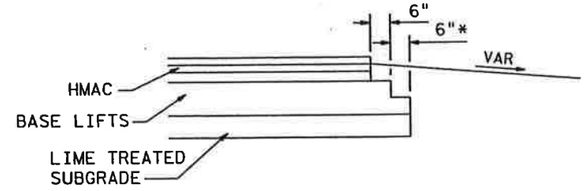

4 HMAC PAVEMENT EDGE DETAIL OPEN EDGE

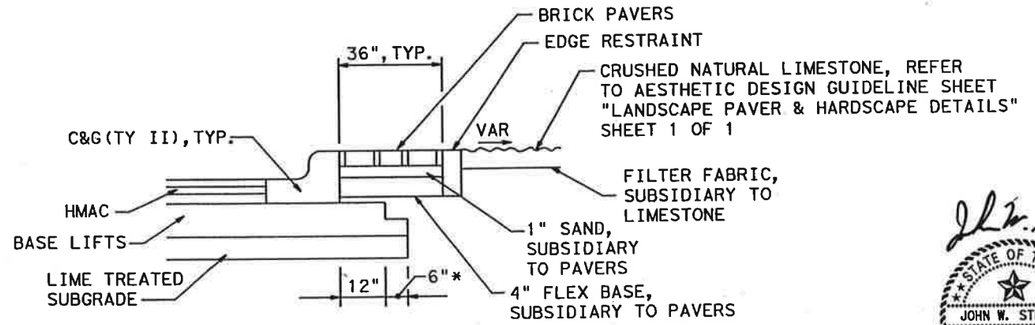

5 C&G (TYII) EDGE DETAIL TO CRUSHED NATURAL LIMESTONE

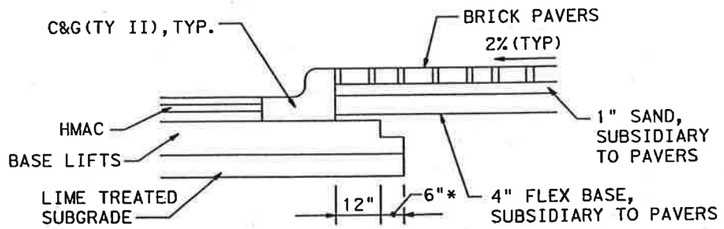

6 C&G (TYII) EDGE DETAIL TO BRICK PAVER AREAS

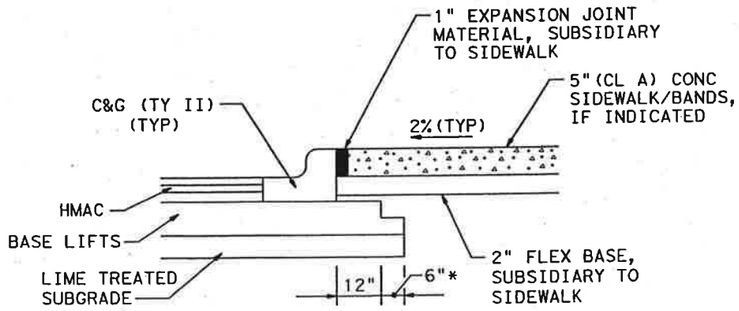

7 C&G (TYII) EDGE DETAIL TO SIDEWALK/BANDS AREAS

STATE OF TEXAS
JOHN W. STRYBOS
64259
LICENSED PROFESSIONAL ENGINEER
2-27-2003

PROPOSED TYPICAL SECTIONS DETAILS

SH 45 / US 183 INTERCHANGE

NOT TO SCALE

HNTB ARCHITECTS ENGINEERS PLANNERS
The HNTB Companies

Texas Department of Transportation
© 2003 TEXAS TURNPIKE AUTHORITY DIVISION

DRAWING PREPARED BY:	HNTB CORPORATION			
SHEET 9 OF 9				
FED. RD. DIV. NO.	FEDERAL AID PROJECT NO.			SHEET NO.
6	MG 2002 (243)			20
DGN: CDA	STATE	DIST.	COUNTY	
CHK: JEG	TEXAS	14	WILLIAMSON	
DWN: JSS	CONT.	SECT.	JOB	HIGHWAY NO.
CHK: CAD	0683	01	069	SH 45

Pen Table: I:\Jobs\32058\techprod\rdwy\plots\32058h.pen
Design Filename: I:\Jobs\32058\TECHPROD\Rdwy\Dwg\phs1\45pa08010.dgn

Scale: 100.000000:1.000000
Plotted on: 26-FEB-2003 01:44

MATCH LINE STA 136+00

MATCH LINE STA 148+00

℄ SH 45 WBML"L"
℄ SH 45"J"
℄ SH 45 EBML"K"
℄ SH 45 EBFR"W"
℄ RAMP"B"
℄ EBSB CONN. "M"
℄ EBNB CONN. "P"
PC 139+80.00
PC 146+71.29
BEGIN ML BRIDGE STA 142+97.37"K"
N68°51'22.73"E
SH 45 EASTBOUND FR RD
RAMP"B"
RW-15
RW-14
RW-16
K1
J5
BI-3
REMOVE OLD C&G
REMOVE OLD RIPRAP
REMOVE OLD WALL
REMOVE OLD MBGR
REMOVE OLD DRIVEWAY
REMOVE OLD MBGF
ROW
OHE
21"SS
8"W
BEGIN ALIGNMENT "K"
STA 139+80.00"K"=
STA 139+80.00"J"
34.00' RT

THIS SHEET FOR REMOVAL INFORMATION AND PAYMENT OF EARTHWORK ONLY.

LEGEND
- CONTROL POINT
- BENCHMARK
- BORE HOLE
- HORIZONTAL ALIGNMENT DATA (B1)
- CONC RIPRAP
- CONC UNIT PAVERS
- OVERHEAD SIGN FOUNDATIONS
- CRUSHED NATIVE LIMESTONE
- TRUNCATED DOME CURB RAMP
- WORK BY OTHERS

NOTES:
1. ALL DIMENSIONS AND CALLOUTS ARE TO LIP OF GUTTER, EDGE OF CRCP, OR BASELINE UNLESS OTHERWISE NOTED.
2. REFER TO IRRIGATION PLANS FOR LOCATIONS OF CROSS ROADWAY PIPE SLEEVING.
3. REFER TO HORIZONTAL DATA SHEETS FOR CURVE DATA.
4. REFER TO EROSION CONTROL PLANS FOR SEEDING & TOPSOIL DETAILS.
5. THE INFORMATION SHOWN ON THIS DRAWING CONCERNING TYPE AND LOCATION OF UNDERGROUND AND OVERHEAD UTILITIES IS NOT GUARANTEED TO BE ACCURATE OR ALL INCLUSIVE. THE CONTRACTOR IS RESPONSIBLE FOR MAKING HIS OR HER OWN DETERMINATION AS TO THE TYPE AND LOCATION OF UNDERGROUND UTILITIES AS MAY BE NECESSARY TO AVOID DAMAGE THERETO.

STATE OF TEXAS
JOHN W. STRYBOS
64259
LICENSED PROFESSIONAL ENGINEER
2-27-2003

SHEET TOTALS			
EST.	FINAL	UNIT	DESCRIPTION
19742		CY	EXCAVATION(RDWY)
51737		CY	EXCAVATION(CHNL)
6151		CY	EMBANKMENT

	2394	2200	2159	2139	3082	2655	888	702	758	748	782	1235
	0	0	0	0	0	0	6186	7331	8840	10466	9877	9037
	68	295	464	698	1219	1293	347	901	626	106	101	33

ex = 1.52'
K = 167
L = 450.00 ft.

ex = -11.70'
K = 309
L = 1700.00 ft.

*PROPOSED PROFILE SHIFTS FROM ALIGNMENT "J" TO ALIGNMENT "K".

FUTURE"J"
FUTURE WORK BY OTHERS
FUTURE HOV
EXISTING "J"
EXISTING "K"
PROPOSED "K"
BEGIN BRIDGE STA 142+97.37 "K"
"K" VPC 140+00.00 Elev 957.15
*VPI 139+80.00 "K" Elev 957.19
"K" VPI STA 142+25.00 Elev 956.73
"K" VPT 144+50.00 Elev 962.39
VPC 145+50.00 Elev 964.91
-0.1866%
+2.5156%
+2.5156%

	962.33	961.39	960.45	959.64	958.99	958.48	958.12	957.92	957.15	957.13	957.27	957.55	957.98	958.56	959.29	960.18	961.21	962.39	963.65	964.91	966.12	967.26	968.32	969.29	970.18
	939.73	937.72	937.38	938.43	941.20	940.75	937.35	935.58	937.22	936.05	937.22	935.73	936.37	936.38	936.84	937.27	936.23	934.76	931.52	929.94	931.76	929.81	929.83	929.80	929.38
		PROPOSED EXISTING																							

980 970 960 950 940 930 920

136+00 137+00 138+00 139+00 140+00 141+00 142+00 143+00 144+00 145+00 146+00 147+00 148+00

PLAN PROFILE

SH 45 EASTBOUND MAIN LANES STA 136+00 TO STA 148+00

SH 45 / US 183 INTERCHANGE

SCALE: PLAN 1":100'
PROFILE 1":20'

HNTB ARCHITECTS ENGINEERS PLANNERS
The HNTB Companies

Texas Department of Transportation
© 2003 TEXAS TURNPIKE AUTHORITY DIVISION

DRAWING PREPARED BY:	HNTB CORPORATION
SHEET 3 OF 12	

FED. RD. DIV. NO.	FEDERAL AID PROJECT NO.	SHEET NO.
6	MG 2002 (243)	276

DGN: RLR	STATE	DIST.	COUNTY
CHK DSN: JEG	TEXAS	14	WILLIAMSON
DWN: JSS	CONT.	SECT.	JOB / HIGHWAY NO.
CHK DRG: CAD	0683	01	069 / SH 45

Pen Tables: I:\Jobs\32058\techprod\rdwy\plots\32058h.pen
Design Filename: I:\Jobs\32058\TECHPROD\Rdwy\Dwg\ph1\45pp0808.dgn

Scale: 100.000000:1.000000
Plotted on: 26-FEB-2003 01:44

MATCH LINE STA 148+00

MATCH LINE STA 160+00

REMOVE OLD RIPRAP
℄ SH 45 WBML"L"
PRC 149+33.51
REMOVE OLD MBGF
℄ EBNB CONN. "P"
℄ TA"AM"
℄ RAMP"B"
REMOVE OLD MBGF
REMOVE OLD RIPRAP
REMOVE OLD DRIVE
REMOVE OLD C & G
℄ SH 45"J"
℄ SH 45 EBML"K"
PT 154+42.76
N70° 47' 05.91"E
℄ WBSB CONN. "R"
℄ SBEB CONN. "S"
REMOVE OLD C & G
REMOVE OLD RIP RAP
℄ TA"AL"
℄ SH 45 EBFR"W"
SH 45 EASTBOUND FR RD
REMOVE OLD DRIVEWAY
REMOVE OLD RIPRAP
℄ NBEB CONN. "T"
REMOVE OLD C & G
℄ NBWB CONN. "O"
US 183 SOUTHBOUND FR RD
US 183 NORTHBOUND FR RD
℄ US 183 NBFR"AF"
ROW
℄ EBSB CONN. "M"
℄ US 183 SBFR"AG"
℄ US 183"AR"
ROW
**CONC. RIPRAP (CL B) 20.9CY
FOR COLUMN MOW STRIPS

BH-15 BH-16 BH-17 BI-1 BI-4 BI-8 2-BI-2

J5 J6 K1 K2

150+00 155+00 160+00 425+00 715+00 805+00 830+00 835+00

21"SS OHE UGT A8"W A12"W A24"W A4"G

LEGEND

- CONTROL POINT
- BENCHMARK
- BORE HOLE
- HORIZONTAL ALIGNMENT DATA (B1)
- CONC RIPRAP
- CONC UNIT PAVERS
- OVERHEAD SIGN FOUNDATIONS
- CRUSHED NATIVE LIMESTONE
- TRUNCATED DOME CURB RAMP
- WORK BY OTHERS

NOTES:

1. ALL DIMENSIONS AND CALLOUTS ARE TO LIP OF GUTTER, EDGE OF CRCP, OR BASELINE UNLESS OTHERWISE NOTED.
2. REFER TO IRRIGATION PLANS FOR LOCATIONS OF CROSS ROADWAY PIPE SLEEVING.
3. REFER TO HORIZONTAL DATA SHEETS FOR CURVE DATA.
4. REFER TO EROSION CONTROL PLANS FOR SEEDING & TOPSOIL DETAILS.
5. THE INFORMATION SHOWN ON THIS DRAWING CONCERNING TYPE AND LOCATION OF UNDERGROUND AND OVERHEAD UTILITIES IS NOT GUARANTEED TO BE ACCURATE OR ALL INCLUSIVE. THE CONTRACTOR IS RESPONSIBLE FOR MAKING HIS OR HER OWN DETERMINATION AS TO THE TYPE AND LOCATION OF UNDERGROUND UTILITIES AS MAY BE NECESSARY TO AVOID DAMAGE THERETO.

STATE OF TEXAS
JOHN W. STRYBOS
64259
LICENSED
PROFESSIONAL ENGINEER

2-27-2003

1922	1782	613	0	0	0	0	0	17262	4463	4692	3743
9107	8053	3230	0	0	0	0	0	0	0	0	0
53	94	4	0	0	0	0	0	1365	234	46	75

+2.5156% -2.9884%
VPI STA 154+00.00
Elev 986.29

THIS SHEET FOR REMOVAL INFORMATION AND PAYMENT OF EARTHWORK ONLY.

PROPOSED"K"

US 183 SBML US 183 NBML

ex = -11.70'
K = 309
L = 1700.00 ft.

EXISTING
US 183 SBFR "AG"
FRONTAGE ROAD WEST TA "AM"
US 183 NBFR "AF"
FRONTAGE ROAD EAST TA "AL"
PROPOSED
EXISTING

980 970 960 950 940 930 920

970.18	971.00	971.73	972.38	972.95	973.44	973.85	974.17	974.42	974.58	974.67	974.67	974.59	974.44	974.20	973.88	973.47	972.99	972.43	971.78	971.06	970.25	969.37	968.40	967.35
929.38	929.47	929.77	928.69	923.93	917.91	916.62	922.20	926.29	926.75	925.91	926.34	924.71	925.09	926.12	925.46	924.48	924.23	922.09	923.76	923.56	923.35	923.91	922.67	922.61

148+00 149+00 150+00 151+00 152+00 153+00 154+00 155+00 156+00 157+00 158+00 159+00 160+00

SHEET TOTALS

EST.	FINAL	UNIT	DESCRIPTION
34477		CY	EXCAVATION(RDWY)
20390		CY	EXCAVATION(CHNL)
1871		CY	EMBANKMENT

PLAN PROFILE

SH 45 EASTBOUND MAIN LANES STA 148+00 TO STA 160+00

SH 45 / US 183 INTERCHANGE

SCALE: PLAN 1":100'
PROFILE 1":20'

HNTB ARCHITECTS ENGINEERS PLANNERS
The HNTB Companies

Texas Department of Transportation
© 2003 TEXAS TURNPIKE AUTHORITY DIVISION

DRAWING PREPARED BY: HNTB CORPORATION
SHEET 4 OF 12

FED. RD. DIV. NO.	FEDERAL AID PROJECT NO.	SHEET NO.
6	MG 2002 (243)	277

DGN: RLR	STATE	DIST.	COUNTY
CHK: JEG	TEXAS	14	WILLIAMSON
DSN: JSS	CONT.	SECT.	JOB / HIGHWAY NO.
CHK: CAD	0683	01	069 / SH 45

Pen Table: I:\Jobs\32058\TechProd\rdwy\plots\32058h.pen
Design Filename: I:\Jobs\32058\TECHPROD\Rdwy\Dwg\phs1\45pp0809.dgn

Scale: 100.000000:1.000000
Plotted on: 26-FEB-2003 01:44

MATCH LINE STA 160+00

MATCH LINE STA 172+00

J6 | K2 | K3

PT 161+73.69

℄ SH 45"J"

PRC 164+10.35

END ML BRIDGE
STA 165+99.62 "K"

BEGIN CTB TY2
STA 165+99.77"K"
10.0' LT (NOM FACE)

MBGF & CHAIN LINK FENCE 24'

CONC RIPRAP (CL B) 2.2CY

WF BM

EXP JT

SH 45 WESTBOUND MAINLANES

℄ SH 45 WBML"L"

RW-17

PT 169+80.28

CTB TY2

N68°58'22.07"E

BI-11 ℄ SH 45 EBML"K"

SH 45 EASTBOUND MAINLANES

RW-29

RW-9

RW-20

2.0%

2.5%

13'

46'

59'

21'

80'

℄ SBEB CONN. "S"

℄ SH 45 EBFR"W"

SH 45 EASTBOUND FR RD

℄ NBEB CONN. "T"

REMOVE OLD C & G

REMOVE OLD DRIVEWAY

ROW

END ALIGNMENT "K"
STA 169+80.28"K"
STA 169+80.00"J"
34.00' RT

REMOVE OLD DRIVEWAY

160+00 | 165+00 | 170+00

120+00 | 135+00 | 140+00

**CONC. RIPRAP(CL B) 3CY
FOR COLUMN MOW STRIPS

2159	1182	992	1464	2731	3597	2031	1489	1330	1488	1709	1910
0	0	0	0	0	0	0	0	0	0	0	0
131	282	235	41	23	889	15796	16043	15800	15825	15343	15105

ex = 1.13'
K = 177
L = 400.00 ft.

ex = 1.29'
K = 196
L = 450.00 ft.

ex = -11.70'
K = 309
L = 1700.00 ft.

*PROPOSED PROFILE SHIFTS FROM ALIGNMENT "K" TO ALIGNMENT "J".

"J" VPC 163+50.00 Elev 957.68

"K" VPC 163+75.00 Elev 957.154

VPT 162+50.00 Elev 960.89

-2.9884%

-3.0000%

-0.7404%

END BRIDGE STA 165+99.62 "K"

-0.6901%

"J" VPI STA 165+50.00 Elev 951.68

"K" VPI STA 166+00.00 Elev 950.43

"J" VPT 167+50.00 Elev 950.20

"K" VPT 168+25.00 Elev 948.88

-0.6901%

MATCH ℄ SH 45 STA 169+80.00"J" Elev 948.49

*VPI 169+80.28 "K" Elev 947.81

PROPOSED"K"

FUTURE HOV

PROPOSED"J"

EXISTING "K"

EXISTING "J"

970 | 960 | 950 | 940 | 930 | 920 | 910

PROPOSED EXISTING

967.35	966.22	965.01	963.72	962.34	960.89	959.39	957.90	956.42	955.06	953.82	952.71	951.72	950.87	950.14	949.54	949.07	948.70	948.36	948.01	948.35	947.98	947.61	947.24	946.87
922.61	922.46	922.27	921.75	921.53	921.75	922.06	922.45	922.94	923.94	924.34	923.87	922.66	921.42	920.82	920.27	920.14	919.65	919.70	919.45	919.40	919.43	919.35	918.81	918.87

160+00 | 161+00 | 162+00 | 163+00 | 164+00 | 165+00 | 166+00 | 167+00 | 168+00 | 169+00 | 170+00 | 171+00 | 172+00

LEGEND

- CONTROL POINT
- BENCHMARK
- BORE HOLE
- HORIZONTAL ALIGNMENT DATA (B1)
- CONC RIPRAP
- CONC UNIT PAVERS
- OVERHEAD SIGN FOUNDATIONS
- CRUSHED NATIVE LIMESTONE
- TRUNCATED DOME CURB RAMP
- WORK BY OTHERS

NOTES:

1. ALL DIMENSIONS AND CALLOUTS ARE TO LIP OF GUTTER, EDGE OF CRCP, OR BASELINE UNLESS OTHERWISE NOTED.
2. REFER TO IRRIGATION PLANS FOR LOCATIONS OF CROSS ROADWAY PIPE SLEEVING.
3. REFER TO HORIZONTAL DATA SHEETS FOR CURVE DATA.
4. REFER TO EROSION CONTROL PLANS FOR SEEDING & TOPSOIL DETAILS.
5. THE INFORMATION SHOWN ON THIS DRAWING CONCERNING TYPE AND LOCATION OF UNDERGROUND AND OVERHEAD UTILITIES IS NOT GUARANTEED TO BE ACCURATE OR ALL INCLUSIVE. THE CONTRACTOR IS RESPONSIBLE FOR MAKING HIS OR HER OWN DETERMINATION AS TO THE TYPE AND LOCATION OF UNDERGROUND UTILITIES AS MAY BE NECESSARY TO AVOID DAMAGE THERETO.

STATE OF TEXAS
JOHN W. STRYBOS
64259
LICENSED
PROFESSIONAL ENGINEER

2-27-2003

SHEET TOTALS

EST.	FINAL	UNIT	DESCRIPTION
22082		CY	EXCAVATION(RDWY)
0		CY	EXCAVATION(CHNL)
95513		CY	EMBANKMENT

PLAN PROFILE

SH 45 EASTBOUND MAIN LANES STA 160+00 TO STA 172+00

SH 45 / US 183 INTERCHANGE

SCALE: PLAN 1":100'
PROFILE 1":20'

HNTB ARCHITECTS ENGINEERS PLANNERS
The HNTB Companies

Texas Department of Transportation
© 2003 TEXAS TURNPIKE AUTHORITY DIVISION

DRAWING PREPARED BY: HNTB CORPORATION

SHEET 5 OF 12

FED. RD. DIV. NO.	FEDERAL AID PROJECT NO.	SHEET NO.
6	MG 2002 (243)	278

DSN: RLR	STATE	DIST.	COUNTY
CK: JEG	TEXAS	14	WILLIAMSON
DW: JSS	CONT.	SECT.	JOB	HIGHWAY NO.
CK: CAD	0683	01	069	SH 45

Pen Table: I:\Jobs\32058\techprod\rdwy\plots\32058h.pen
Design Filename: I:\Jobs\32058\TECHPROD\Rdwy\DwgVphs\V45pp0810.dgn

Scale= 100.000000:1.000000
Plotted on: 26-FEB-2003 01:44

Pen Table: I:\Jobs\32058\techprod\rdwy\plots\32058h.pen
Design Filename: I:\Jobs\32058\TECHPROD\Rdwy\Dwg\phs1\45pp0811.dgn

MATCH LINE STA 172+00

MATCH LINE STA 184+00

RW-17 BEGIN ML BRIDGE STA 175+53.11"J"
℄ SH 45"J"
MBGF & CHAIN LINK FENCE 21'
CTB TY2
CONC RIPRAP (CL B) 1.6CY
END CTB TY2 STA 175+52.99"J" 24.0' RT(NOM FACE)
WF BM
EXP JT
RW-20
RW-21
RW-22
RW-23
RW-24
REMOVE OLD C & G
REMOVE OLD SIDEWALK
REMOVE OLD DRIVEWAY
℄ TA"AO"
℄ TA"AN"
℄ SH 45 EBFR"W"
ROW
℄ NORTH LAKE CREEK PKWY."Z"
N. LAKE CREEK PARKWAY
END ML BRIDGE STA 178+77.11"J" STA 149+60.40"T"
℄ WBNB CONN."U"
SH 45 WESTBOUND MAIN LANES
N68°58'22.07"E
SH 45 EASTBOUND MAIN LANES
BEGIN CTB TY2 STA 178+77.00"J" 24.0' RT(NOM FACE)
℄ NBEB CONN."T"
SH 45 EASTBOUND FR RD
END ALIGNMENT "T" STA 151+29.92"T" = STA 180+45.40"J" 110.00'RT
205+00
200+00
180+00
175+00
170+00
15+00
BLC-2
BLC-3
BLC-4
RW-11
1010
403
972.63

2065	2039	1892	1029	0	0	0	4055	1417	1608	1721	1740	1524
0	0	0	0	0	0	0	0	0	0	0	0	0
15023	14998	14790	8001	0	0	0	3127	18408	16859	15736	14872	13991

PROPOSED"J"
BEGIN BRIDGE STA 175+53.11 "J" Elev 943.37
VPC 172+50.00 Elev. 946.50
-0.7404%
VPI STA 177+75.00 Elev. 942.61
-0.7404%
-2.7695%
END BRIDGE STA 178+77.11 "J" Elev 938.05
-2.7695%
VPT 183+00.00 Elev. 928.07
EXISTING
N. LAKE CREEK WEST TA "AO"
N. LAKE CREEK "Z"
N. LAKE CREEK EAST TA "AN"
ex = -2.66'
K = 518
L = 1050.00 ft.
PROPOSED
EXISTING

960 950 940 930 920 910 900

946.87	946.50	946.10	945.66	945.17	944.63	944.04	943.41	942.72	941.99	941.21	940.38	939.50	938.58	937.60	936.58	935.51	934.39	933.22	932.01	930.74	929.43	928.07	926.69	925.30
918.87	918.45	918.08	917.65	917.22	916.73	916.84	916.25	915.55	916.74	916.54	915.79	913.44	912.94	912.23	911.76	910.80	910.45	910.00	909.19	908.34	907.47	906.77	905.92	905.09

172+00 173+00 174+00 175+00 176+00 177+00 178+00 179+00 180+00 181+00 182+00 183+00 184+00

LEGEND
CONTROL POINT
BENCHMARK
BORE HOLE
HORIZONTAL ALIGNMENT DATA B1
CONC RIPRAP
CONC UNIT PAVERS
OVERHEAD SIGN FOUNDATIONS
CRUSHED NATIVE LIMESTONE
TRUNCATED DOME CURB RAMP
WORK BY OTHERS

NOTES:
1. ALL DIMENSIONS AND CALLOUTS ARE TO LIP OF GUTTER, EDGE OF CRCP, OR BASELINE UNLESS OTHERWISE NOTED.
2. REFER TO IRRIGATION PLANS FOR LOCATIONS OF CROSS ROADWAY PIPE SLEEVING.
3. REFER TO HORIZONTAL DATA SHEETS FOR CURVE DATA.
4. REFER TO EROSION CONTROL PLANS FOR SEEDING & TOPSOIL DETAILS.
5. THE INFORMATION SHOWN ON THIS DRAWING CONCERNING TYPE AND LOCATION OF UNDERGROUND AND OVERHEAD UTILITIES IS NOT GUARANTEED TO BE ACCURATE OR ALL INCLUSIVE. THE CONTRACTOR IS RESPONSIBLE FOR MAKING HIS OR HER OWN DETERMINATION AS TO THE TYPE AND LOCATION OF UNDERGROUND UTILITIES AS MAY BE NECESSARY TO AVOID DAMAGE THERETO.

STATE OF TEXAS
JOHN W. STRYBOS
64259
LICENSED PROFESSIONAL ENGINEER
2-27-2003

SHEET TOTALS			
EST.	FINAL	UNIT	DESCRIPTION
19090		CY	EXCAVATION(RDWY)
0		CY	EXCAVATION(CHNL)
135805		CY	EMBANKMENT

PLAN PROFILE

SH 45 EASTBOUND MAIN LANES STA 172+00 TO STA 184+00

SH 45 / US 183 INTERCHANGE

SCALE: PLAN 1":100'
PROFILE 1":20'

HNTB ARCHITECTS ENGINEERS PLANNERS
The HNTB Companies

Texas Department of Transportation
© 2003 TEXAS TURNPIKE AUTHORITY DIVISION

DRAWING PREPARED BY: HNTB CORPORATION
SHEET 6 OF 12

FED. RD. DIV. NO.	FEDERAL AID PROJECT NO.	SHEET NO.
6	MG 2002 (243)	279

DGN: RLR	STATE	DIST.	COUNTY
CHK: JEG	TEXAS	14	WILLIAMSON
DWN: JSS	CONT.	SECT.	JOB	HIGHWAY NO.
CHK: CAD	0683	01	069	SH 45

Scale: 100.000000:1.000000
Plotted on: 26-FEB-2003 01:44

MATCH LINE STA 184+00

MATCH LINE STA 196+00

BEGIN ML BRIDGE STA 184+42.00"J"
MBGF & CHAIN LINK FENCE 21'
CONC RIPRAP (CL B) 1.6CY
B-2
B-3
℄ SH 45"J"
185+00
N68°58'22.07"E
190+00
195+00
END CTB TY2 STA 184+42.00"J" 24.0' RT (NOM. FACE)
CTB TY2
RW-30
B-1
CONC RIPRAP (CL B) 1.9CY
B-4
EXP JT
WF BM
RW-24
℄ SH 45 EBFR"W"
SH 45 EASTBOUND FR RD
REMOVE OLD DRIVEWAY
ROW
REMOVE OLD DRIVEWAY
REMOVE OLD DRIVEWAY

1365	1322	1294	1249	1099	924	854	933	1021	879	545	308
0	7537	7906	8412	8879	8053	7332	6915	6720	6459	6178	5910
5380	49	63	70	110	151	181	177	207	269	430	680

950
940
930
920
910
900
890

BEGIN BRIDGE STA 184+42.00 "J" Elev. 924.14
PROPOSED"J"
-2.7695%
VPC 186+40.00 Elev. 918.65
ex = 1.48'
K = 211
L = 500.00 ft.
VPT 191+40.00 Elev. 910.72
-2.7695%
-0.4044%
VPI STA 188+90.00 Elev. 911.73
-0.4044%
EXISTING
PROPOSED EXISTING

925.30 905.09 | 923.92 904.40 | 922.53 903.68 | 921.15 903.22 | 919.76 902.72 | 918.38 901.95 | 917.08 901.87 | 915.89 901.48 | 914.83 900.92 | 913.88 900.32 | 913.05 899.91 | 912.34 898.93 | 911.75 897.92 | 911.27 898.45 | 910.92 898.10 | 910.68 897.30 | 910.48 896.41 | 910.27 896.04 | 910.07 895.88 | 909.87 896.13 | 909.67 896.20 | 909.47 895.77 | 909.26 896.11 | 909.06 895.62 | 908.86 895.13

184+00 185+00 186+00 187+00 188+00 189+00 190+00 191+00 192+00 193+00 194+00 195+00 196+00

LEGEND

- CONTROL POINT
- BENCHMARK
- BORE HOLE
- HORIZONTAL ALIGNMENT DATA (B1)
- CONC RIPRAP
- CONC UNIT PAVERS
- OVERHEAD SIGN FOUNDATIONS
- CRUSHED NATIVE LIMESTONE
- TRUNCATED DOME CURB RAMP
- WORK BY OTHERS

NOTES:

1. ALL DIMENSIONS AND CALLOUTS ARE TO LIP OF GUTTER, EDGE OF CRCP, OR BASELINE UNLESS OTHERWISE NOTED.
2. REFER TO IRRIGATION PLANS FOR LOCATIONS OF CROSS ROADWAY PIPE SLEEVING.
3. REFER TO HORIZONTAL DATA SHEETS FOR CURVE DATA.
4. REFER TO EROSION CONTROL PLANS FOR SEEDING & TOPSOIL DETAILS.
5. THE INFORMATION SHOWN ON THIS DRAWING CONCERNING TYPE AND LOCATION OF UNDERGROUND AND OVERHEAD UTILITIES IS NOT GUARANTEED TO BE ACCURATE OR ALL INCLUSIVE. THE CONTRACTOR IS RESPONSIBLE FOR MAKING HIS OR HER OWN DETERMINATION AS TO THE TYPE AND LOCATION OF UNDERGROUND UTILITIES AS MAY BE NECESSARY TO AVOID DAMAGE THERETO.

STATE OF TEXAS
JOHN W. STRYBOS
64259
LICENSED PROFESSIONAL ENGINEER

2-27-2003

SHEET TOTALS

EST.	FINAL	UNIT	DESCRIPTION
11793		CY	EXCAVATION(RDWY)
80301		CY	EXCAVATION(CHNL)
7767		CY	EMBANKMENT

PLAN PROFILE

SH 45 EASTBOUND MAIN LANES STA 184+00 TO STA 196+00

SH 45 / US 183 INTERCHANGE

SCALE: PLAN 1":100'
PROFILE 1":20'

HNTB ARCHITECTS ENGINEERS PLANNERS
The HNTB Companies

Texas Department of Transportation

© 2003 TEXAS TURNPIKE AUTHORITY DIVISION

DRAWING PREPARED BY: HNTB CORPORATION

SHEET 7 OF 12

FED. RD. DIV. NO.	FEDERAL AID PROJECT NO.	SHEET NO.
6	MG 2002 (243)	280

DGN: RLR	STATE	DIST.	COUNTY
CHK: JEG	TEXAS	14	WILLIAMSON
DWN: JSS	CONT.	SECT.	JOB / HIGHWAY NO.
CHK: CAD	0683	01	069 / SH 45

Pen Tables: I:\Jobs\32058\techprod\rdwy\plots\32058h.pen
Design Filename: I:\Jobs\32058\TECHPROD\Rdwy\Dwg\ph61\45pp0812.dgn

Scale: 100.000000:1.000000
Plotted on: 26-FEB-2003 01:44

MATCH LINE STA 196+00

MATCH LINE STA 208+00

℄ SH 45"J"

N68° 58' 22.07"E

200+00

UGT

MBGF & CHAIN LINK FENCE 21'

CONC RIPRAP (CL B) 1.6CY

CONC RIPRAP (CL B) 11.4CY

END ML BRIDGE STA 204+58.00"J"

SH 45 WESTBOUND MAIN LANES

BEGIN CTB TY2 STA 204+58.00"J" 24.0' RT (NOM FACE)

205+00

EXP JT

WF BM

21'

83'

VARIES

CTB TY2

SH 45 EASTBOUND MAIN LANES

TE 1

B-7

B-6

REMOVE OLD C & G

REMOVE OLD DRIVEWAY

SH 45 EASTBOUND FR RD

℄ SH 45 EBFR"W"

200+00

10+00

205+00

RW-32

CONC RIPRAP (CL B) 10.6CY

RW-36

ROW

RW-37

ROW

RW-38

BEGIN TAPER "TE" STA 205+75.01 "J" 104.00' RT

ROW

RW-39

℄ RAMP"D"

REMOVE OLD DRIVEWAY

NOTE: CHANNEL EXCAVATION BETWEEN STA 203+00 AND 204+00 INCLUDES 2480CY EXCAVATION FOR CULVERT B OUTFALL CHANNEL. REFER TO DRAINAGE SHEETS FOR LIMITS AND DETAILS.

LYNDHURST STREET

BROADMEADE AVENUE

8"SS

18"WW

266	342	226	159	132	210	261	283	304	505	774	819
5474	4903	4353	4374	4607	4809	5701	8271	0	0	0	0
656	824	845	954	852	639	408	358	3397	6535	5903	5102

940 930 920 910 900 890 880

PROPOSED"J"

EXISTING

PROPOSED EXISTING

SUPER ELEVATION TRANSITION REVERSE PARABOLIC

STA 202+34.00 -2.50% BEG TRANSITION

-0.4044%

END BRIDGE STA 204+58.00 "J" Elev 905.39

VPC 206+50.00 Elev. 904.61

ex = 0.92'
K = 218
L = 400.00 ft.

908.86	908.66	908.45	908.25	908.05	907.85	907.65	907.44	907.24	907.04	906.84	906.63	906.43	906.23	906.03	905.83	905.62	905.42	905.22	905.02	904.81	904.61	904.47	904.44	904.52
895.13	894.73	894.34	894.03	893.54	893.07	892.70	892.59	892.57	892.05	891.67	892.02	892.28	892.94	893.37	893.91	893.89	894.30	895.10	895.31	895.31	895.70	896.15	896.62	897.42

196+00 197+00 198+00 199+00 200+00 201+00 202+00 203+00 204+00 205+00 206+00 207+00 208+00

LEGEND

- CONTROL POINT
- BENCHMARK
- BORE HOLE
- HORIZONTAL ALIGNMENT DATA (B1)
- CONC RIPRAP
- CONC UNIT PAVERS
- OVERHEAD SIGN FOUNDATIONS
- CRUSHED NATIVE LIMESTONE
- TRUNCATED DOME CURB RAMP
- WORK BY OTHERS

NOTES:

1. ALL DIMENSIONS AND CALLOUTS ARE TO LIP OF GUTTER, EDGE OF CRCP, OR BASELINE UNLESS OTHERWISE NOTED.
2. REFER TO IRRIGATION PLANS FOR LOCATIONS OF CROSS ROADWAY PIPE SLEEVING.
3. REFER TO HORIZONTAL DATA SHEETS FOR CURVE DATA.
4. REFER TO EROSION CONTROL PLANS FOR SEEDING & TOPSOIL DETAILS.
5. THE INFORMATION SHOWN ON THIS DRAWING CONCERNING TYPE AND LOCATION OF UNDERGROUND AND OVERHEAD UTILITIES IS NOT GUARANTEED TO BE ACCURATE OR ALL INCLUSIVE. THE CONTRACTOR IS RESPONSIBLE FOR MAKING HIS OR HER OWN DETERMINATION AS TO THE TYPE AND LOCATION OF UNDERGROUND UTILITIES AS MAY BE NECESSARY TO AVOID DAMAGE THERETO.

STATE OF TEXAS
JOHN W. STRYBOS
64259
LICENSED
PROFESSIONAL ENGINEER

2-27-2003

SHEET TOTALS

EST.	FINAL	UNIT	DESCRIPTION
4281		CY	EXCAVATION(RDWY)
42492		CY	EXCAVATION(CHNL)
26473		CY	EMBANKMENT

PLAN PROFILE

SH 45 EASTBOUND MAIN LANES STA 196+00 TO STA 208+00

SH 45 / US 183 INTERCHANGE

SCALE: PLAN 1":100'
PROFILE 1":20'

HNTB ARCHITECTS ENGINEERS PLANNERS
The HNTB Companies

Texas Department of Transportation

© 2003 TEXAS TURNPIKE AUTHORITY DIVISION

DRAWING PREPARED BY: HNTB CORPORATION

SHEET 8 OF 12

FED. RD. DIV. NO.	FEDERAL AID PROJECT NO.	SHEET NO.
6	MG 2002 (243)	281

DGN: RLR	STATE	DIST.	COUNTY
CHK: JEG	TEXAS	14	WILLIAMSON
DWG: JSS	CONT.	SECT.	JOB / HIGHWAY NO.
CHK: CAD	0683	01	069 / SH 45

Pen Tables: \32058\techprod\rdwy\plots\32058h.pen
Design Filena: \Jobs\32058\TECHPROD\Rdwy\Dwg\phs1\45pp0813.dgn

Scale: 100.0000000:1.000000
Plotted on: 26-FEB-2003 15:10

NOTE: REFER TO DETAIL SHEETS FOR SUPPLEMENTAL PAVEMENT ELEVATION AND X-SLOPE TRANSITION DATA.

MATCH LINE STA 208+00

MATCH LINE STA 220+00

BROADMEADE AVENUE

RUTLEDGE SPUR

BRIAR HOLLOW DRIVE

℄ SH 45"J"

PC 208+88.86

N68°58'22.07"E

210+00

215+00

220

SH 45 WESTBOUND AVI LANES

SH 45 EASTBOUND AVI LANES

BEGIN TAPER "TF"
STA 214+00.20 "J"
90' RT

END TAPER "TE"
STA 218+73.29 "J"
180.33' RT

CTB TY2

REMOVE OLD DRIVEWAY

VARIES

21'

59'

3.3%

2.5%

TF1

TE 1

TE 2

TE 3

TE 4

℄ RAMP"D"

RAMP"D"

EASTBOUND CASH LANES

RUMBLE STRIPS
SEE DETAIL
SHEET 437

MONOCURB (TYI)

6.5'

RW-32

CONC RIPRAP
(CL B) 29.4CY

CONC RIPRAP
(CL B) 18.6CY

REMOVE
OLD C & G

15+00

20+00

℄ SH 45 EASTBOUND FR RD

210+00

RW-6

℄ SH 45 EBFR"W"

215+00

REMOVE OLD DRIVEWAY

RW-40

ROW

CONC RIPRAP
(CL B) 18.6CY

RW-33

BEGIN ML
MONOCURB(TYI)
STA 22+29.96"D"
6.5' RT

REMOVE OLD C&G

CONC RIPRAP
(CL B) 21.9CY

ROW

OHE

UGT

AG

766	382	272	614	588	604	972	1037	812	1199	2413	4132
0	0	0	0	0	0	0	0	0	0	0	0
5233	5542	7016	9174	11772	13534	12694	14800	11267	3494	1646	870

SUPER ELEVATION TRANSITION REVERSE PARABOLIC

FULL SUPER ELEVATION @ MAX = -3.30%

ex = 0.92'
K = 218
L = 400.00 ft.

VPT 210+50.00
Elev 906.66

STA 212+00.00 -3.30%
END TRANSITION

PROPOSED"J"

+1.4306%

EXISTING

-0.4044%

+1.4306%
VPI STA 208+50.00
Elev 907.80

VPC 216+50.00
Elev 915.25

STA 220+00.00 -3.30%
BEGIN TRANSITION

ex = -1.93'
K = 414
L = 800.00 ft.

PROPOSED
EXISTING

904.52 / 897.42	904.72 / 897.68	905.03 / 898.03	905.46 / 898.04	906.01 / 898.62	906.66 / 898.25	907.38 / 898.31	908.09 / 898.49	908.81 / 898.97	909.53 / 898.60	910.24 / 897.73	910.96 / 898.99	911.67 / 899.57	912.39 / 900.57	913.10 / 902.42	913.82 / 904.53	914.53 / 906.02	915.25 / 907.86	915.93 / 910.15	916.56 / 911.67	917.12 / 912.93	917.63 / 913.82	918.07 / 914.31	918.45 / 915.49	918.78 / 917.44
208+00	209+00	210+00	211+00	212+00	213+00	214+00	215+00	216+00	217+00	218+00	219+00	220+00												

950 940 930 920 910 900 890

LEGEND

- CONTROL POINT
- BENCHMARK
- BORE HOLE
- HORIZONTAL ALIGNMENT DATA (B1)
- CONC RIPRAP
- CONC UNIT PAVERS
- OVERHEAD SIGN FOUNDATIONS
- CRUSHED NATIVE LIMESTONE
- TRUNCATED DOME CURB RAMP
- WORK BY OTHERS

NOTES:

1. ALL DIMENSIONS AND CALLOUTS ARE TO LIP OF GUTTER, EDGE OF CRCP, OR BASELINE UNLESS OTHERWISE NOTED.
2. REFER TO IRRIGATION PLANS FOR LOCATIONS OF CROSS ROADWAY PIPE SLEEVING.
3. REFER TO HORIZONTAL DATA SHEETS FOR CURVE DATA.
4. REFER TO EROSION CONTROL PLANS FOR SEEDING & TOPSOIL DETAILS.
5. THE INFORMATION SHOWN ON THIS DRAWING CONCERNING TYPE AND LOCATION OF UNDERGROUND AND OVERHEAD UTILITIES IS NOT GUARANTEED TO BE ACCURATE OR ALL INCLUSIVE. THE CONTRACTOR IS RESPONSIBLE FOR MAKING HIS OR HER OWN DETERMINATION AS TO THE TYPE AND LOCATION OF UNDERGROUND UTILITIES AS MAY BE NECESSARY TO AVOID DAMAGE THERETO.

STATE OF TEXAS
JOHN W. STRYBOS
64259
LICENSED
PROFESSIONAL ENGINEER

2-27-2003

SHEET TOTALS			
EST.	FINAL	UNIT	DESCRIPTION
13791		CY	EXCAVATION(RDWY)
0		CY	EXCAVATION(CHNL)
97042		CY	EMBANKMENT

PLAN PROFILE

SH 45 EASTBOUND MAIN LANES STA 208+00 TO STA 220+00

SH 45 / US 183 INTERCHANGE

SCALE: PLAN 1":100'
PROFILE 1":20'

HNTB ARCHITECTS ENGINEERS PLANNERS
The HNTB Companies

Texas Department of Transportation

© 2003 TEXAS TURNPIKE AUTHORITY DIVISION

DRAWING PREPARED BY: HNTB CORPORATION

SHEET 9 OF 12

FED. RD. DIV. NO.	FEDERAL AID PROJECT NO.	SHEET NO.
6	MG 2002 (243)	282

DGN: RLR	STATE	DIST.	COUNTY
CHK: JEG	TEXAS	14	WILLIAMSON
DWN: JSS	CONT.	SECT.	JOB / HIGHWAY NO.
CHK: CAD	0683	01	069 / SH 45

Pen Tablet: \Jobs\32058\techprod\rdwy\plots\32058h.pen
Design Filename: I:\Jobs\32058\TECHPROD\Rdwy\Dwg\phs1\45pp0814.dgn

Scale: 100.000000:1.000000
Plotted on: 26-FEB-2003 15:10

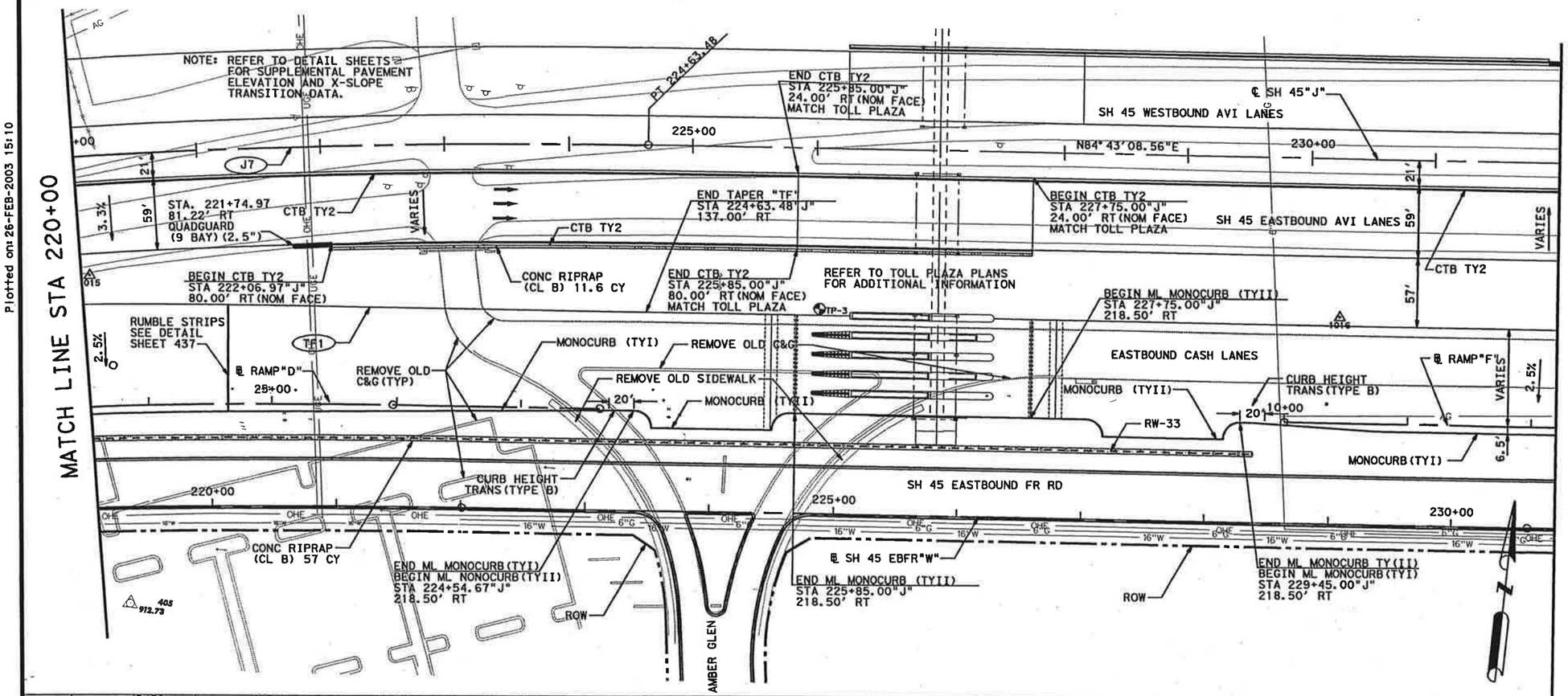

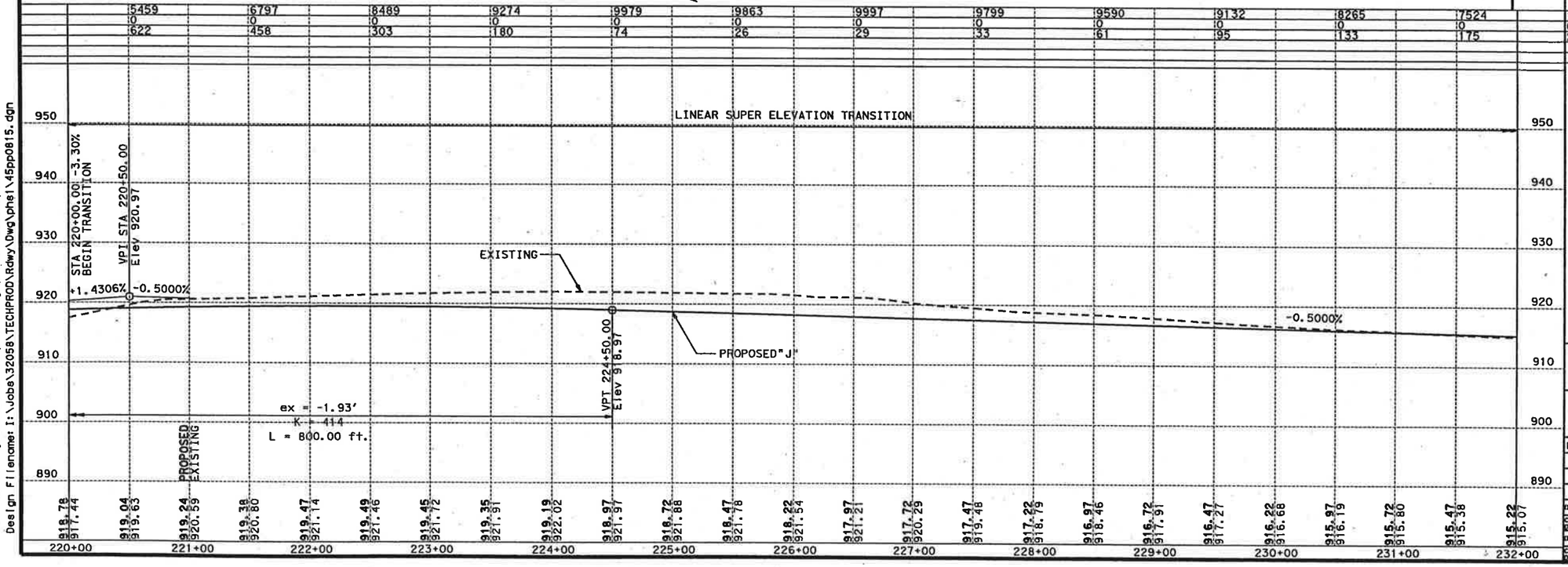

LEGEND

- CONTROL POINT
- BENCHMARK
- BORE HOLE
- HORIZONTAL ALIGNMENT DATA (B1)
- CONC RIPRAP
- CONC UNIT PAVERS
- OVERHEAD SIGN FOUNDATIONS
- CRUSHED NATIVE LIMESTONE
- TRUNCATED DOME CURB RAMP
- WORK BY OTHERS

NOTES:

1. ALL DIMENSIONS AND CALLOUTS ARE TO LIP OF GUTTER, EDGE OF CRCP, OR BASELINE UNLESS OTHERWISE NOTED.
2. REFER TO IRRIGATION PLANS FOR LOCATIONS OF CROSS ROADWAY PIPE SLEEVING.
3. REFER TO HORIZONTAL DATA SHEETS FOR CURVE DATA.
4. REFER TO EROSION CONTROL PLANS FOR SEEDING & TOPSOIL DETAILS.
5. THE INFORMATION SHOWN ON THIS DRAWING CONCERNING TYPE AND LOCATION OF UNDERGROUND AND OVERHEAD UTILITIES IS NOT GUARANTEED TO BE ACCURATE OR ALL INCLUSIVE. THE CONTRACTOR IS RESPONSIBLE FOR MAKING HIS OR HER OWN DETERMINATION AS TO THE TYPE AND LOCATION OF UNDERGROUND UTILITIES AS MAY BE NECESSARY TO AVOID DAMAGE THERETO.

STATE OF TEXAS
JOHN W. STRYBOS
64259
LICENSED
PROFESSIONAL ENGINEER

2-27-2003

SHEET TOTALS			
EST.	FINAL	UNIT	DESCRIPTION
104168		CY	EXCAVATION(RDWY)
0		CY	EXCAVATION(CHNL)
2189		CY	EMBANKMENT

PLAN
PROFILE

SH 45 EASTBOUND MAIN LANES
STA 220+00 TO STA 232+00

SH 45 / US 183 INTERCHANGE

SCALE: PLAN 1":100'
PROFILE 1":20'

HNTB ARCHITECTS ENGINEERS PLANNERS
The HNTB Companies

Texas Department of Transportation
© 2003 TEXAS TURNPIKE AUTHORITY DIVISION

DRAWING PREPARED BY: HNTB CORPORATION
SHEET 10 OF 12

FED. RD. DIV. NO.	FEDERAL AID PROJECT NO.			SHEET NO.
6	MG 2002 (243)			283
DGN: RLR	STATE	DIST.	COUNTY	
CHK: JEG	TEXAS	14	WILLIAMSON	
DWN: JSS	CONT.	SECT.	JOB	HIGHWAY NO.
CHK: CAD	0683	01	069	SH 45

Pen Table: I:\Jobs\32058\techprod\rdwy\plots\32058h.pen
Design Filename: I:\Jobs\32058\TECHPROD\Rdwy\Dwg\ph1\45pp0815.dgn

Scale: 100.000000:1.000000
Plotted on: 26-FEB-2003 01:45

Pen Table: I:\Jobs\32058\techprod\rdwy\plots\32058h.pen
Design Filename: I:\Jobs\32058\TECHPROD\Rdwy\Dwg\phs1\45pp0816.dgn

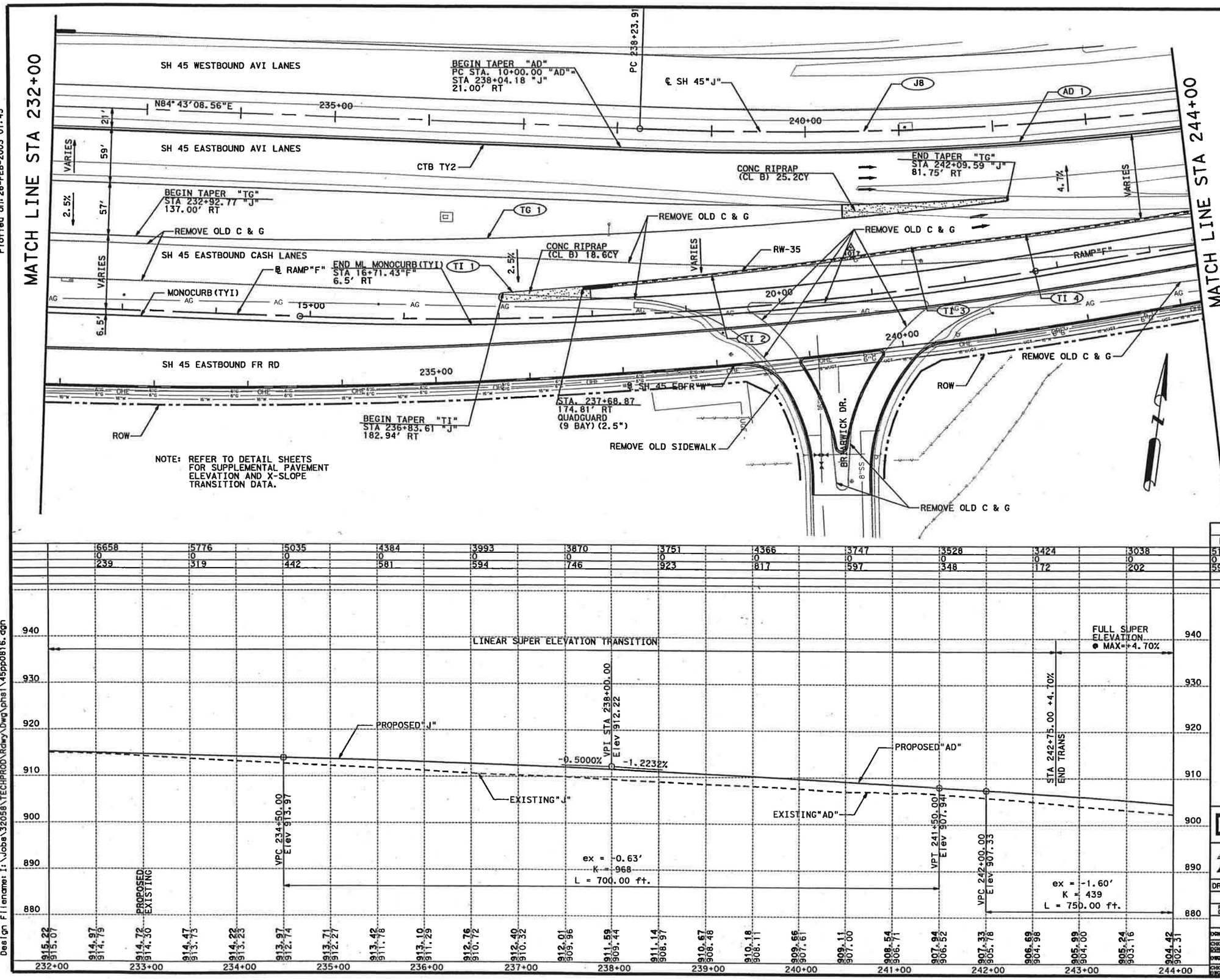

LEGEND

- CONTROL POINT
- BENCHMARK
- BORE HOLE
- HORIZONTAL ALIGNMENT DATA (B1)
- CONC RIPRAP
- CONC UNIT PAVERS
- OVERHEAD SIGN FOUNDATIONS
- CRUSHED NATIVE LIMESTONE
- TRUNCATED DOME CURB RAMP
- WORK BY OTHERS

NOTES:

1. ALL DIMENSIONS AND CALLOUTS ARE TO LIP OF GUTTER, EDGE OF CRCP, OR BASELINE UNLESS OTHERWISE NOTED.
2. REFER TO IRRIGATION PLANS FOR LOCATIONS OF CROSS ROADWAY PIPE SLEEVING.
3. REFER TO HORIZONTAL DATA SHEETS FOR CURVE DATA.
4. REFER TO EROSION CONTROL PLANS FOR SEEDING & TOPSOIL DETAILS.
5. THE INFORMATION SHOWN ON THIS DRAWING CONCERNING TYPE AND LOCATION OF UNDERGROUND AND OVERHEAD UTILITIES IS NOT GUARANTEED TO BE ACCURATE OR ALL INCLUSIVE. THE CONTRACTOR IS RESPONSIBLE FOR MAKING HIS OR HER OWN DETERMINATION AS TO THE TYPE AND LOCATION OF UNDERGROUND UTILITIES AS MAY BE NECESSARY TO AVOID DAMAGE THERETO.

STATE OF TEXAS
JOHN W. STRYBOS
64259
LICENSED
PROFESSIONAL ENGINEER
2-27-2003

SHEET TOTALS

EST.	FINAL	UNIT	DESCRIPTION
51570		CY	EXCAVATION(RDWY)
0		CY	EXCAVATION(CHNL)
5980		CY	EMBANKMENT

PLAN PROFILE

SH 45 EASTBOUND MAIN LANES STA 232+00 TO STA 244+00

SH 45 / US 183 INTERCHANGE

SCALE: PLAN 1":100'
PROFILE 1":20'

HNTB ARCHITECTS ENGINEERS PLANNERS
The HNTB Companies

Texas Department of Transportation
© 2003 TEXAS TURNPIKE AUTHORITY DIVISION

DRAWING PREPARED BY: HNTB CORPORATION
SHEET 11 OF 12

FED. RD. DIV. NO.	FEDERAL AID PROJECT NO.	SHEET NO.
6	NG 2002 (243)	284

DGN	STATE	DIST.	COUNTY
RLR	TEXAS	14	WILLIAMSON
CHK JEG	CONT.	SECT.	JOB / HIGHWAY NO.
DWG JSS	0683	01	069 / SH 45
CHK CAD			

Scale: 100.000000:1.000000
Plotted on: 26-FEB-2003 01:45

MATCH LINE STA 244+00

AD 1

END TAPER "AD"
PT STA. 21+20.18 "AD"=
STA 249+19.28 "J"
14.00' RT

PT 249+19.28

CTB TY2

℄ SH 45"J"

SH 45 WESTBOUND MAIN LANES

N68°17'18.46"E

END PROJECT
END ALIGNMENT "AD"
MATCH EXISTING
STA 254+56.21"AD"=
STA 252+50.00"J"
14.00' LT

END CTB TY2
STA 252+50.00"J"
17.00' RT(NOM FACE)

245+00 250+00 255+00

VARIES 4.7% VARIES

REMOVE OLD C & G

RW-35

TI 5

SGT

BEGIN MBGF
STA 249+18.75 "J"

MBGF TRANS

END MBGF
BEGIN T501 RAIL
STA 250+00.00"J"
100.00' RT

80'

SH 45 EASTBOUND MAIN LANES

0.06%

84'

REMOVE OLD MBGF

℄ RAMP"F"

RAMP"F"

25+00

REMOVE OLD C & G

MBGF 62.5'

CONC RIPRAP
(CL B) 23.7CY

REMOVE OLD MBGF

℄ SH 45 EBFR"W"

30+00

SH 45 EASTBOUND FR RD

250+00

TI 4

245+00

REMOVE OLD DRIVEWAY

END TAPER "TI"
STA 249+19.28 "J"
97.00' RT

ROW

NOTE: REFER TO DETAIL SHEETS FOR SUPPLEMENTAL PAVEMENT ELEVATION AND X-SLOPE TRANSITION DATA.

3028	3222	3452	3522	3494	3328	3044	2771	1165
0	0	0	0	0	0	0	0	0
295	342	294	139	47	35	36	50	29

FULL SUPER ELEVATION @MAX=+4.70%

SUPER ELEVATION TRANSITION REVERSE PARABOLIC

STA 244+69.11 +4.70% BEGIN TRANS

-1.2232% VPI STA 245+75.00 Elev 902.74 -2.9321%

EXISTING"AD"

PROPOSED"AD"

VPT 249+50.00 Elev 891.74

END PROJECT 252+50.00"J" Elev 882.95

WORK BY OTHERS

STA 258+19.09 -2.00% INSIDE SHLDR/-2.50% LANES END TRANSITION

ex = -1.60'
K = 439
L = 750.00 ft.

PROPOSED EXISTING

244+00	245+00	246+00	247+00	248+00	249+00	250+00	251+00	252+00	253+00	254+00	255+00	256+00
904.42 / 905.46	903.56 / 904.50	902.63 / 903.53	901.65 / 902.56	900.61 / 901.52	899.52 / 900.45	898.36 / 899.31	897.15 / 898.18	895.89 / 896.92	894.56 / 895.52	893.18 / 894.07	891.74 / 892.72	890.28 / 891.27	888.81 / 889.70	887.35 / 888.15	885.88 / 886.52	884.41 / 884.92	882.95 / 883.31	881.48 / 881.77	880.02 / 880.28	878.55 / 878.79	877.08 / 877.28	875.62	874.15	872.69

930 920 910 900 890 880 870 860

LEGEND

- CONTROL POINT
- BENCHMARK
- BORE HOLE
- HORIZONTAL ALIGNMENT DATA (B1)
- CONC RIPRAP
- CONC UNIT PAVERS
- OVERHEAD SIGN FOUNDATIONS
- CRUSHED NATIVE LIMESTONE
- TRUNCATED DOME CURB RAMP
- WORK BY OTHERS

NOTES:

1. ALL DIMENSIONS AND CALLOUTS ARE TO LIP OF GUTTER, EDGE OF CRCP, OR BASELINE UNLESS OTHERWISE NOTED.
2. REFER TO IRRIGATION PLANS FOR LOCATIONS OF CROSS ROADWAY PIPE SLEEVING.
3. REFER TO HORIZONTAL DATA SHEETS FOR CURVE DATA.
4. REFER TO EROSION CONTROL PLANS FOR SEEDING & TOPSOIL DETAILS.
5. THE INFORMATION SHOWN ON THIS DRAWING CONCERNING TYPE AND LOCATION OF UNDERGROUND AND OVERHEAD UTILITIES IS NOT GUARANTEED TO BE ACCURATE OR ALL INCLUSIVE. THE CONTRACTOR IS RESPONSIBLE FOR MAKING HIS OR HER OWN DETERMINATION AS TO THE TYPE AND LOCATION OF UNDERGROUND UTILITIES AS MAY BE NECESSARY TO AVOID DAMAGE THERETO.

STATE OF TEXAS
JOHN W. STRYBOS
64259
LICENSED PROFESSIONAL ENGINEER

2-27-2003

SHEET TOTALS			
EST.	FINAL	UNIT	DESCRIPTION
27026		CY	EXCAVATION(RDWY)
0		CY	EXCAVATION(CHNL)
1267		CY	EMBANKMENT

PLAN PROFILE

SH 45 EASTBOUND MAIN LANES STA 244+00 TO STA 252+50.00

SH 45 / US 183 INTERCHANGE

SCALE: PLAN 1":100'
PROFILE 1":20'

HNTB ARCHITECTS ENGINEERS PLANNERS
The HNTB Companies

Texas Department of Transportation
© 2003 TEXAS TURNPIKE AUTHORITY DIVISION

DRAWING PREPARED BY: HNTB CORPORATION
SHEET 12 OF 12

FED. RD. DIV. NO.	FEDERAL AID PROJECT NO.	SHEET NO.
6	MG 2002 (243)	285

DGN: RLR	STATE	DIST.	COUNTY
CK: JEG	TEXAS	14	WILLIAMSON
DW: JSS	CONT.	SECT.	JOB / HIGHWAY NO.
CK: CAD	0683	01	069 / SH 45

Pen Table: I:\Jobs\32058\techprod\rdwy\plots\32058h.pen
Design Filename: I:\Jobs\32058\TECHPROD\Rdwy\Dwg\phs1\45pp0817.dgn

Scale: 100.000000:1.000000
Plotted on: 26-FEB-2003 01:49

Pen Tables: \Jobs\32058\techprod\rdwy\plots\32058h.pen
Design Filename: I:\Jobs\32058\TECHPROD\Rdwy\Dwg\phs1\45pp0826.dgn

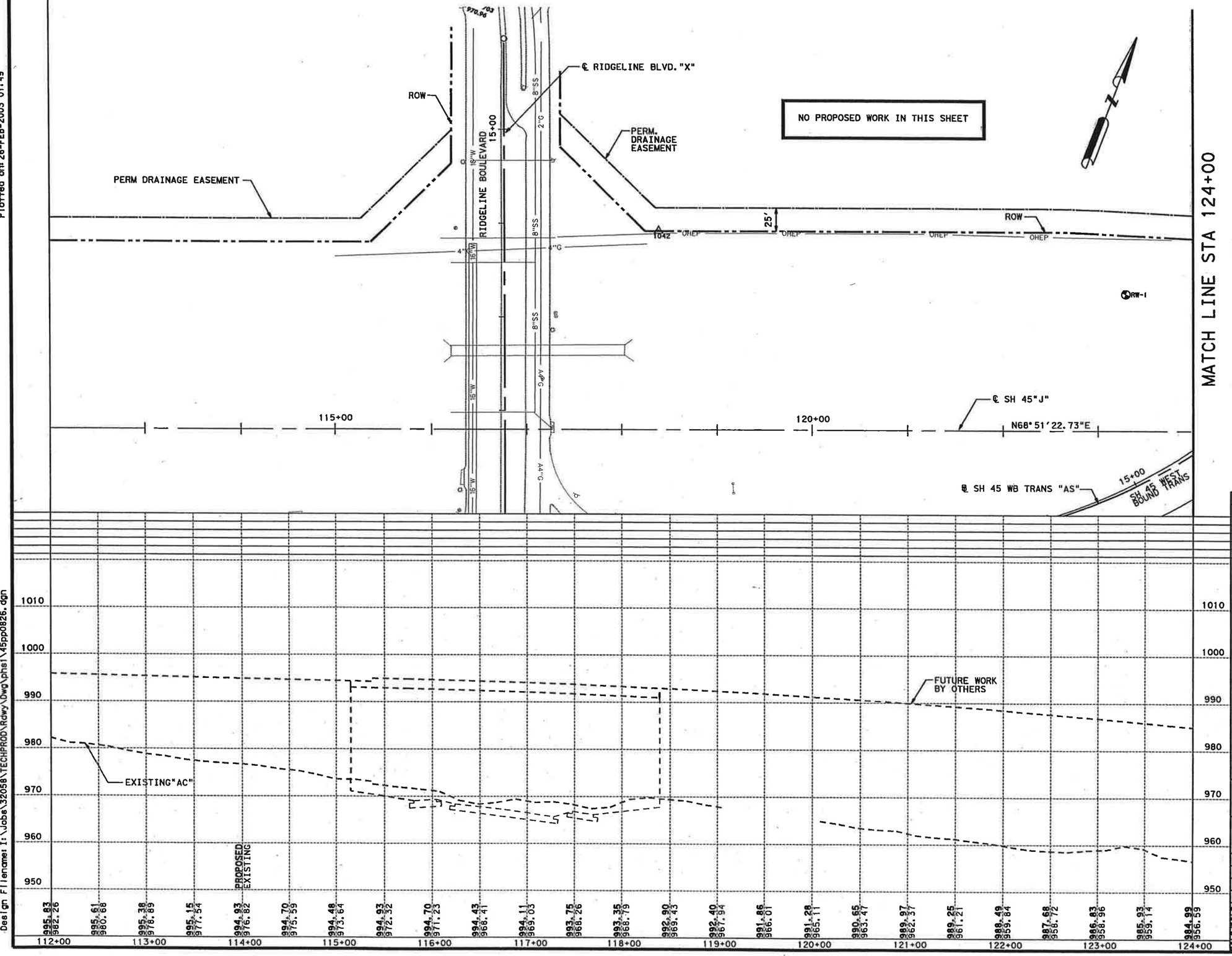

MATCH LINE STA 124+00

LEGEND

- CONTROL POINT
- BENCHMARK
- BORE HOLE
- HORIZONTAL ALIGNMENT DATA (B1)
- CONC RIPRAP
- CONC UNIT PAVERS
- OVERHEAD SIGN FOUNDATIONS
- CRUSHED NATIVE LIMESTONE
- TRUNCATED DOME CURB RAMP
- WORK BY OTHERS

NOTES:

1. ALL DIMENSIONS AND CALLOUTS ARE TO LIP OF GUTTER, EDGE OF CRCP, OR BASELINE UNLESS OTHERWISE NOTED.
2. REFER TO IRRIGATION PLANS FOR LOCATIONS OF CROSS ROADWAY PIPE SLEEVING.
3. REFER TO HORIZONTAL DATA SHEETS FOR CURVE DATA.
4. REFER TO EROSION CONTROL PLANS FOR SEEDING & TOPSOIL DETAILS.
5. THE INFORMATION SHOWN ON THIS DRAWING CONCERNING TYPE AND LOCATION OF UNDERGROUND AND OVERHEAD UTILITIES IS NOT GUARANTEED TO BE ACURATE OR ALL INCLUSIVE. THE CONTRACTOR IS RESPONSIBLE FOR MAKING HIS OR HER OWN DETERMINATION AS TO THE TYPE AND LOCATION OF UNDERGROUND UTILITIES AS MAY BE NECESSARY TO AVOID DAMAGE THERETO.

STATE OF TEXAS
JOHN W. STRYBOS
64259
LICENSED PROFESSIONAL ENGINEER

2-27-2003

SHEET TOTALS			
EST.	FINAL	UNIT	DESCRIPTION

PLAN PROFILE

SH 45 WESTBOUND MAIN LANES STA 112+00 TO STA 124+00

SH 45 / US 183 INTERCHANGE

SCALE: PLAN 1":100'
PROFILE 1":20'

HNTB ARCHITECTS ENGINEERS PLANNERS
The HNTB Companies

Texas Department of Transportation
© 2003 TEXAS TURNPIKE AUTHORITY DIVISION

DRAWING PREPARED BY: HNTB CORPORATION
SHEET 1 OF 12

FED. RD. DIV. NO.	FEDERAL AID PROJECT NO.	SHEET NO.
6	MG 2002 (243)	286

DSGN RLR	STATE	DIST.	COUNTY
CHK JEG	TEXAS	14	WILLIAMSON
DWN JSS	CONT.	SECT.	JOB / HIGHWAY NO.
CHK CAD	0683	01	069 / SH 45

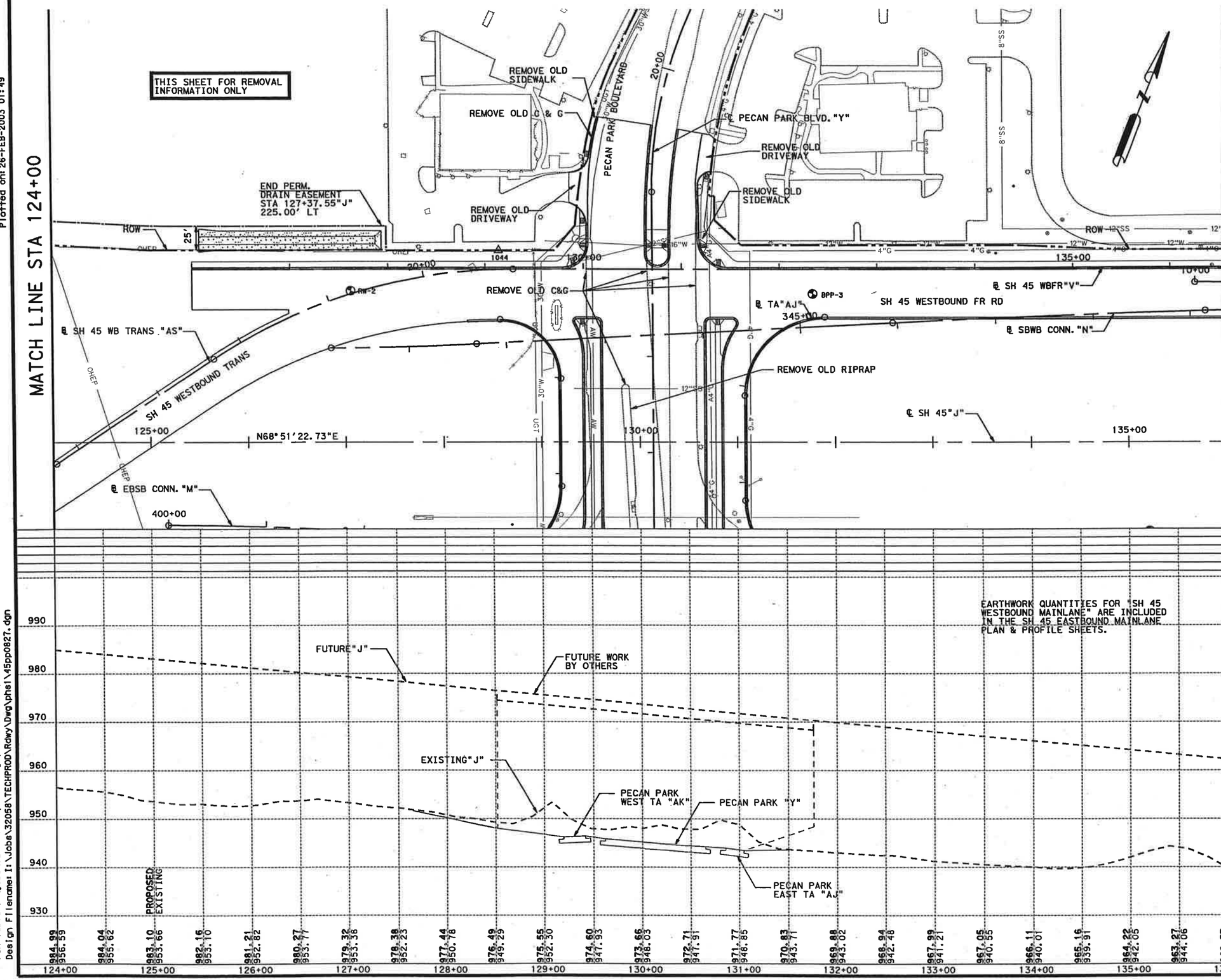

Scale: 100.000000:1.000000
Plotted on: 26-FEB-2003 01:49

Pen Table: I:\Jobs\32058\techprod\rdwy\plots\32058h.pen
Design Filename: I:\Jobs\32058\TECHPROD\Rdwy\Dwg\phs1\45pp0827.dgn

LEGEND

- CONTROL POINT
- BENCHMARK
- BORE HOLE
- HORIZONTAL ALIGNMENT DATA (B1)
- CONC RIPRAP
- CONC UNIT PAVERS
- OVERHEAD SIGN FOUNDATIONS
- CRUSHED NATIVE LIMESTONE
- TRUNCATED DOME CURB RAMP
- WORK BY OTHERS

NOTES:

1. ALL DIMENSIONS AND CALLOUTS ARE TO LIP OF GUTTER, EDGE OF CRCP, OR BASELINE UNLESS OTHERWISE NOTED.
2. REFER TO IRRIGATION PLANS FOR LOCATIONS OF CROSS ROADWAY PIPE SLEEVING.
3. REFER TO HORIZONTAL DATA SHEETS FOR CURVE DATA.
4. REFER TO EROSION CONTROL PLANS FOR SEEDING & TOPSOIL DETAILS.
5. THE INFORMATION SHOWN ON THIS DRAWING CONCERNING TYPE AND LOCATION OF UNDERGROUND AND OVERHEAD UTILITIES IS NOT GUARANTEED TO BE ACCURATE OR ALL INCLUSIVE. THE CONTRACTOR IS RESPONSIBLE FOR MAKING HIS OR HER OWN DETERMINATION AS TO THE TYPE AND LOCATION OF UNDERGROUND UTILITIES AS MAY BE NECESSARY TO AVOID DAMAGE THERETO.

STATE OF TEXAS
JOHN W. STRYBOS
64259
LICENSED PROFESSIONAL ENGINEER
2-27-2003

SHEET TOTALS

EST.	FINAL	UNIT	DESCRIPTION

PLAN PROFILE

SH 45 WESTBOUND MAIN LANES STA 124+00 TO STA 136+00

SH 45 / US 183 INTERCHANGE

SCALE: PLAN 1":100'
PROFILE 1":20'

HNTB ARCHITECTS ENGINEERS PLANNERS
The HNTB Companies

Texas Department of Transportation
© 2003 TEXAS TURNPIKE AUTHORITY DIVISION

DRAWING PREPARED BY: HNTB CORPORATION

SHEET 2 OF 12

FED. RD. DIV. NO.	FEDERAL AID PROJECT NO.	SHEET NO.
6	MG 2002 (243)	287

DGN: RLR	STATE	DIST.	COUNTY	
CHK: JEG	TEXAS	14	WILLIAMSON	
DWG: JSS	CONT.	SECT.	JOB	HIGHWAY NO.
CHK: CAD	0683	01	069	SH 45

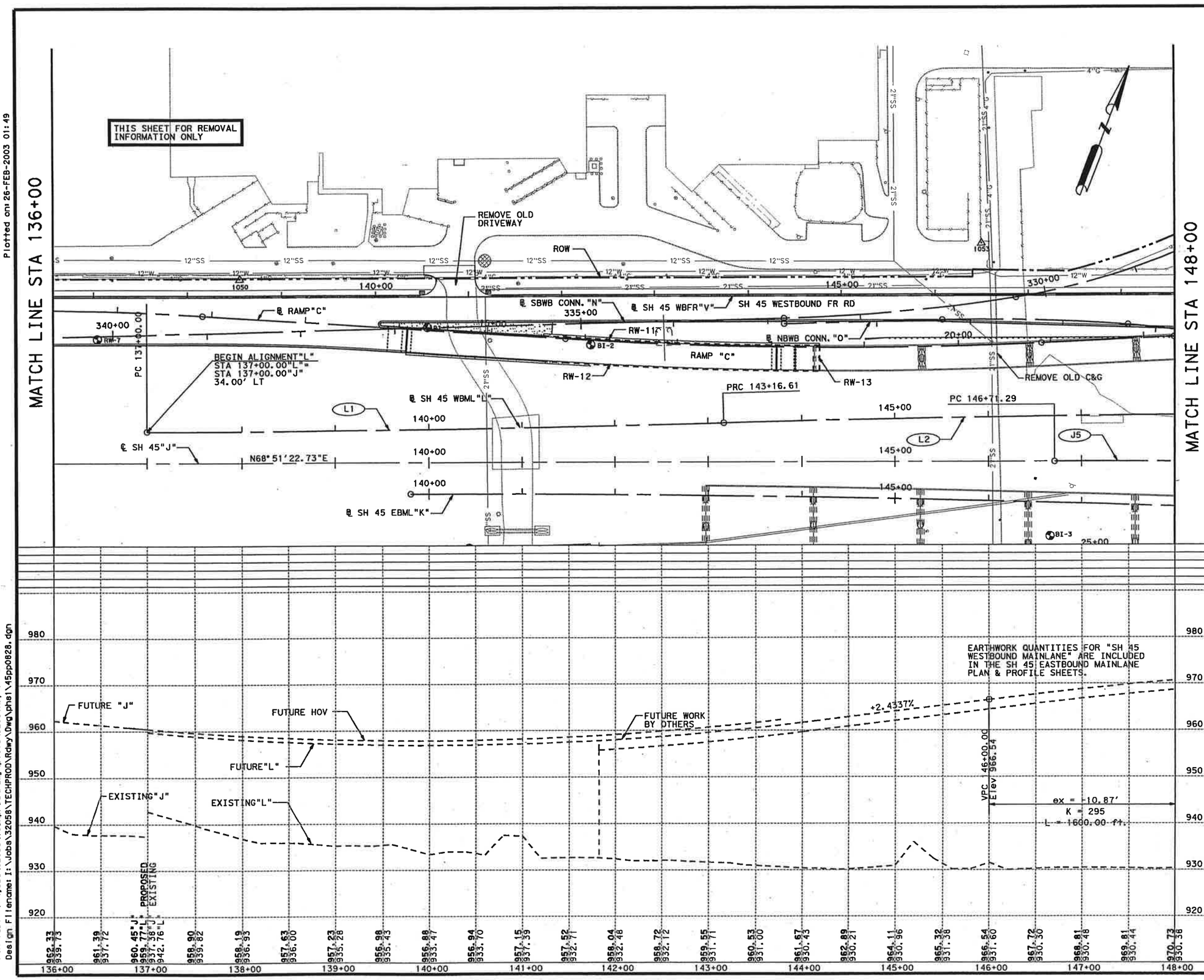

Scale: 100.000000:1.000000
Plotted on: 26-FEB-2003 01:49

Pen Table: I:\Jobs\32058\techprod\rdwy\plots\32058h.pen
Design Filename: I:\Jobs\32058\TECHPROD\Rdwy\Dwg\phs1\45pp0828.dgn

LEGEND

- CONTROL POINT
- BENCHMARK
- BORE HOLE
- HORIZONTAL ALIGNMENT DATA (B1)
- CONC RIPRAP
- CONC UNIT PAVERS
- OVERHEAD SIGN FOUNDATIONS
- CRUSHED NATIVE LIMESTONE
- TRUNCATED DOME CURB RAMP
- WORK BY OTHERS

NOTES:

1. ALL DIMENSIONS AND CALLOUTS ARE TO LIP OF GUTTER, EDGE OF CRCP, OR BASELINE UNLESS OTHERWISE NOTED.
2. REFER TO IRRIGATION PLANS FOR LOCATIONS OF CROSS ROADWAY PIPE SLEEVING.
3. REFER TO HORIZONTAL DATA SHEETS FOR CURVE DATA.
4. REFER TO EROSION CONTROL PLANS FOR SEEDING & TOPSOIL DETAILS.
5. THE INFORMATION SHOWN ON THIS DRAWING CONCERNING TYPE AND LOCATION OF UNDERGROUND AND OVERHEAD UTILITIES IS NOT GUARANTEED TO BE ACCURATE OR ALL INCLUSIVE. THE CONTRACTOR IS RESPONSIBLE FOR MAKING HIS OR HER OWN DETERMINATION AS TO THE TYPE AND LOCATION OF UNDERGROUND UTILITIES AS MAY BE NECESSARY TO AVOID DAMAGE THERETO.

STATE OF TEXAS
JOHN W. STRYBOS
64259
LICENSED
PROFESSIONAL ENGINEER

2-27-2003

SHEET TOTALS			
EST.	FINAL	UNIT	DESCRIPTION

PLAN PROFILE

SH 45 WESTBOUND MAIN LANES STA 136+00 TO STA 148+00

SH 45 / US 183 INTERCHANGE

SCALE: PLAN 1":100'
PROFILE 1":20'

HNTB ARCHITECTS ENGINEERS PLANNERS
The HNTB Companies

Texas Department of Transportation
© 2003 TEXAS TURNPIKE AUTHORITY DIVISION

DRAWING PREPARED BY: HNTB CORPORATION

SHEET 3 OF 12

FED. RD. DIV. NO.	FEDERAL AID PROJECT NO.	SHEET NO.
6	MG 2002 (243)	288

DGN: RLR	STATE	DIST.	COUNTY
CHK DGN: JEG	TEXAS	14	WILLIAMSON

DWG: JSS	CONT.	SECT.	JOB	HIGHWAY NO.
CHK DWG: CAD	0683	01	069	SH 45

Scale: 100.000000:1.000000
Plotted on: 26-FEB-2003 01:49

MATCH LINE STA 148+00

MATCH LINE STA 160+00

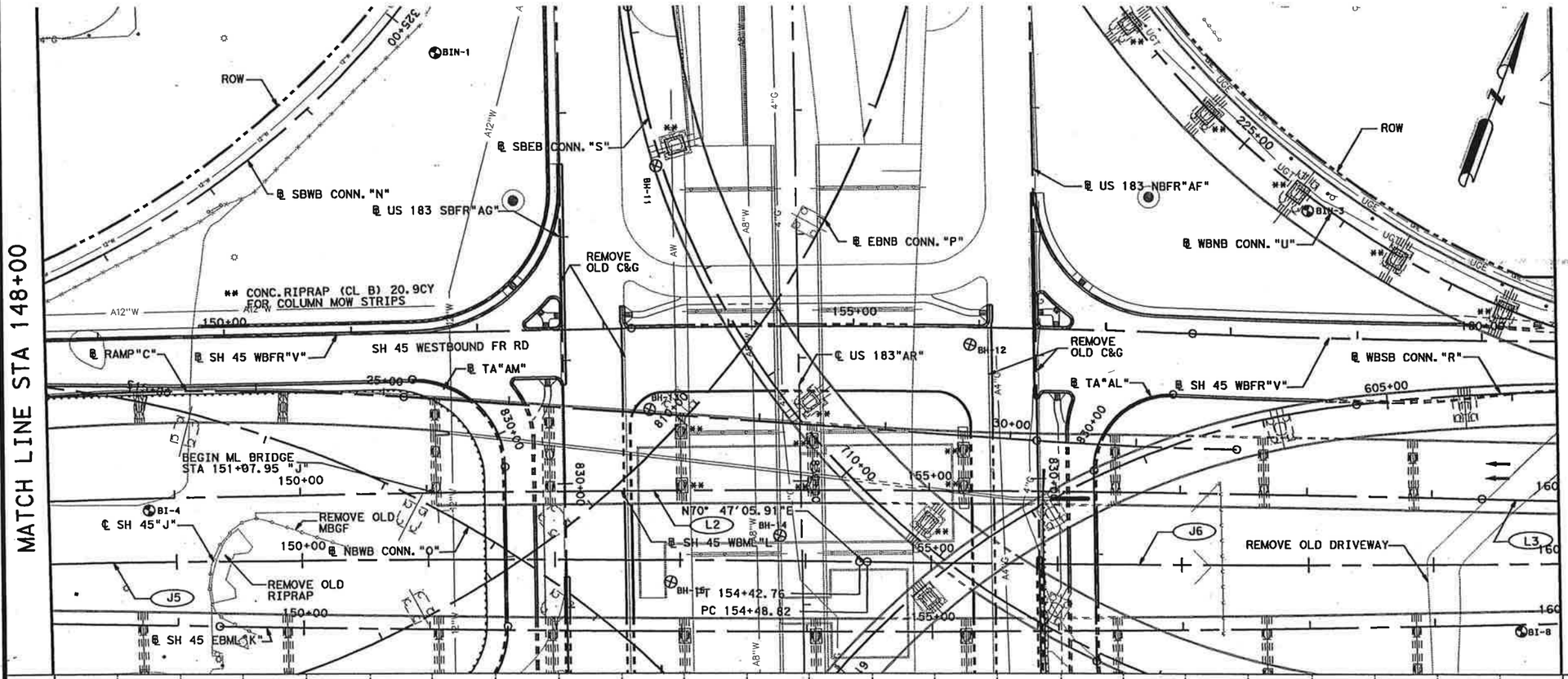

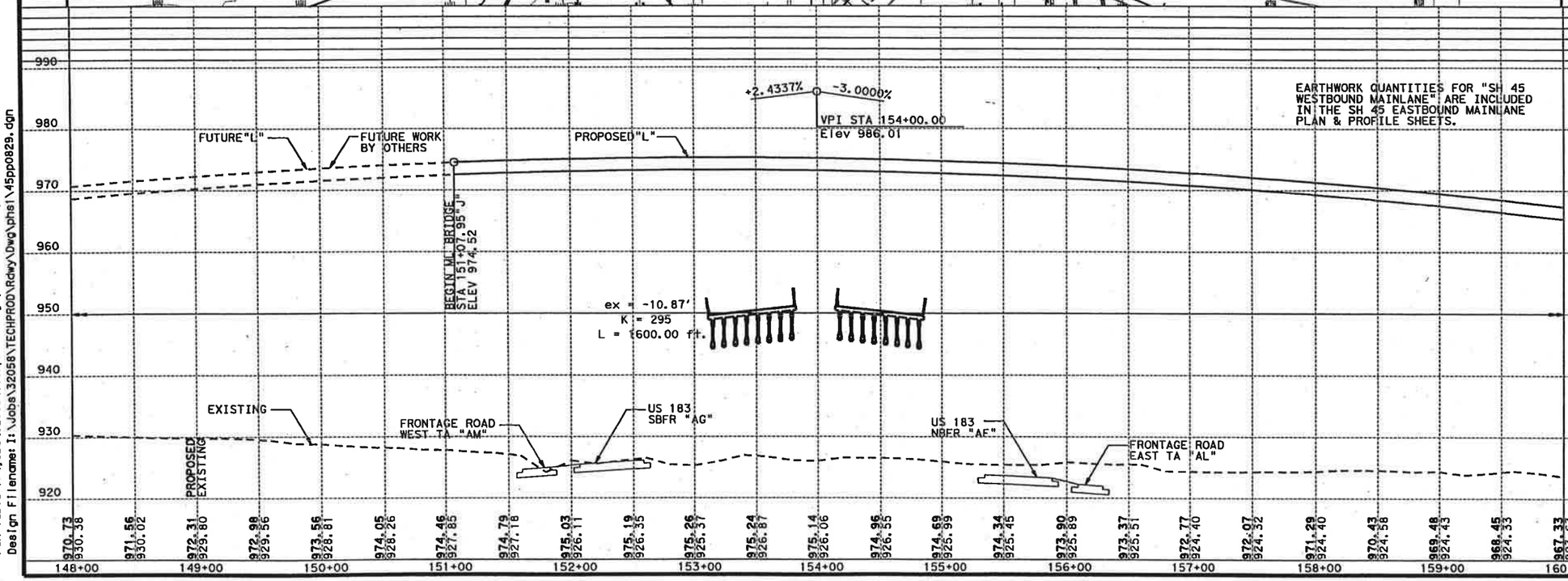

LEGEND

- CONTROL POINT
- BENCHMARK
- BORE HOLE
- HORIZONTAL ALIGNMENT DATA (B1)
- CONC RIPRAP
- CONC UNIT PAVERS
- OVERHEAD SIGN FOUNDATIONS
- CRUSHED NATIVE LIMESTONE
- TRUNCATED DOME CURB RAMP
- WORK BY OTHERS

NOTES:

1. ALL DIMENSIONS AND CALLOUTS ARE TO LIP OF GUTTER, EDGE OF CRCP, OR BASELINE UNLESS OTHERWISE NOTED.
2. REFER TO IRRIGATION PLANS FOR LOCATIONS OF CROSS ROADWAY PIPE SLEEVING.
3. REFER TO HORIZONTAL DATA SHEETS FOR CURVE DATA.
4. REFER TO EROSION CONTROL PLANS FOR SEEDING & TOPSOIL DETAILS.
5. THE INFORMATION SHOWN ON THIS DRAWING CONCERNING TYPE AND LOCATION OF UNDERGROUND AND OVERHEAD UTILITIES IS NOT GUARANTEED TO BE ACCURATE OR ALL INCLUSIVE. THE CONTRACTOR IS RESPONSIBLE FOR MAKING HIS OR HER OWN DETERMINATION AS TO THE TYPE AND LOCATION OF UNDERGROUND UTILITIES AS MAY BE NECESSARY TO AVOID DAMAGE THERETO.

STATE OF TEXAS
JOHN W. STRYBOS
64259
LICENSED
PROFESSIONAL ENGINEER

2-27-2003

SHEET TOTALS			
EST.	FINAL	UNIT	DESCRIPTION

PLAN PROFILE

SH 45 WESTBOUND MAIN LANES STA 148+00 TO STA 160+00

SH 45 / US 183 INTERCHANGE

SCALE: PLAN 1":100'
PROFILE 1":20'

HNTB ARCHITECTS ENGINEERS PLANNERS
The HNTB Companies

Texas Department of Transportation

© 2003 TEXAS TURNPIKE AUTHORITY DIVISION

DRAWING PREPARED BY:	HNTB CORPORATION			
SHEET 4 OF 12				
FED. RD. DIV. NO.	FEDERAL AID PROJECT NO.			SHEET NO.
6	MG 2002 (243)			289
DGN: RLR	STATE	DIST.	COUNTY	
CHK: JEG	TEXAS	14	WILLIAMSON	
DSN: JSS	CONT.	SECT.	JOB	HIGHWAY NO.
CHK: CAD	0683	01	069	SH 45

Pen Table: I:\Jobs\32058\techprod\rdwy\plots\32058h.pen
Design Filename: I:\Jobs\32058\TECHPROD\Rdwy\Dwg\phs1\45pp0829.dgn

Scale: 100.000000:1.000000
Plotted on: 26-FEB-2003 01:49

MATCH LINE STA 160+00

MATCH LINE STA 172+00

** CONC.RIPRAP (CL B) 4.5 CY FOR COLUMN MOW STRIPS

BEGIN MBGF STA 166+30.09"J"

MBGF & CHAIN LINK FENCE 24'

ROW

REMOVE OLD C&G

REMOVE OLD DRIVEWAY

℄ WBNB CONN. "U"

℄ SH 45 WBFR"V"

SH 45 WEST BOUND FR RD

℄ WBSB CONN. "R"

END ML BRIDGE STA 165+99.90"J"

RW-29

WF BM

RW-17

RW-10

MBGF 550'

CONC. RIPRAP (CL B) 21.0CY

℄ SH 45 WBML"L"

℄ SH 45"J"

SH 45 WEST BOUND MAINLANES

MBGF TRANS

EXP JT

N68°58'22.07"E

℄ SH 45 EBML"K"

SGT

END MBGF STA 171+80.09"J"

T501 RAIL 12' DETAIL ON SHEET 439

BI-11

END ALIGNMENT"L" STA 169+00.54"L" STA 169+00.00"J" 34.00' LT

SH 45 EAST BOUND MAINLANES

RW-9

PROPOSED"L"

EXISTING"L"

PROPOSED EXISTING

"J" VPC 163+50.00 Elev 957.68

"L" VPC 163+75.00 Elev 956.76

ex = 1.14'
K = 176
L = 400.00 ft.

ex = 1.13'
K = 177
L = 400.00 ft.

ex = -10.87'
K = 295
L = 1600.00 ft.

VPT 162+00.00 Elev 962.01

-3.0000%

-0.7404%

-0.7260%

0.7407%

END BRIDGE STA 165+99.90"J" Elev 951.45

"J" VPI STA 165+50.00 Elev 951.68

"L" VPI STA 165+75.00 Elev 950.76

"J" VPT 167+50.00 Elev 950.20

"L" VPT 167+75.00 Elev 949.31

FUTURE HOV

MATCH ℄ SH 45 STA 169+00.00"J" Elev 949.09

*VPI 169+00.54"L" Elev 948.40

PROPOSED "J"

EXISTING"J"

*PROPOSED PROFILE SHIFTS FROM ALIGNMENT "L" TO ALIGNMENT "J".

EARTHWORK QUANTITIES FOR "SH 45 WESTBOUND MAINLANE" ARE INCLUDED IN THE SH 45 EASTBOUND MAINLANE PLAN & PROFILE SHEETS.

970 960 950 940 930 920 910

160+00 961.33 923.63 | 161+00 962.13 923.15 | 162+00 962.84 922.56 | 163+00 963.47 921.96 | 164+00 962.01 921.57 | 165+00 960.51 921.81 | 166+00 959.01 922.04 | 167+00 957.51 922.23 | 168+00 956.03 922.72 | 169+00 954.57 924.48 | 170+00 953.45 924.90 | 171+00 952.38 924.73 | 172+00 951.45 924.51 | 950.66 923.90 | 950.01 922.37 | 949.51 920.83 | 949.13 920.44 | 948.76 920.09 | 948.40"L" 948.09"J" 919.69"L" 919.61"J" | 948.72 919.57 | 948.35 919.40 | 947.98 919.43 | 947.61 919.35 | 947.24 918.81 | 946.87 918.87

LEGEND

- CONTROL POINT
- BENCHMARK
- BORE HOLE
- HORIZONTAL ALIGNMENT DATA (B1)
- CONC RIPRAP
- CONC UNIT PAVERS
- OVERHEAD SIGN FOUNDATIONS
- CRUSHED NATIVE LIMESTONE
- TRUNCATED DOME CURB RAMP
- WORK BY OTHERS

NOTES:

1. ALL DIMENSIONS AND CALLOUTS ARE TO LIP OF GUTTER, EDGE OF CRCP, OR BASELINE UNLESS OTHERWISE NOTED.
2. REFER TO IRRIGATION PLANS FOR LOCATIONS OF CROSS ROADWAY PIPE SLEEVING.
3. REFER TO HORIZONTAL DATA SHEETS FOR CURVE DATA.
4. REFER TO EROSION CONTROL PLANS FOR SEEDING & TOPSOIL DETAILS.
5. THE INFORMATION SHOWN ON THIS DRAWING CONCERNING TYPE AND LOCATION OF UNDERGROUND AND OVERHEAD UTILITIES IS NOT GUARANTEED TO BE ACCURATE OR ALL INCLUSIVE. THE CONTRACTOR IS RESPONSIBLE FOR MAKING HIS OR HER OWN DETERMINATION AS TO THE TYPE AND LOCATION OF UNDERGROUND UTILITIES AS MAY BE NECESSARY TO AVOID DAMAGE THERETO.

STATE OF TEXAS
JOHN W. STRYBOS
64259
LICENSED
PROFESSIONAL ENGINEER

2-27-2003

SHEET TOTALS			
EST.	FINAL	UNIT	DESCRIPTION

PLAN PROFILE

SH 45 WESTBOUND MAIN LANES STA 160+00 TO STA 172+00

SH 45 / US 183 INTERCHANGE

SCALE: PLAN 1":100'
PROFILE 1":20'

HNTB ARCHITECTS ENGINEERS PLANNERS
The HNTB Companies

Texas Department of Transportation

© 2003 TEXAS TURNPIKE AUTHORITY DIVISION

DRAWING PREPARED BY:	HNTB CORPORATION			
SHEET 5 OF 12				
FED. RD. DIV. NO.	FEDERAL AID PROJECT NO.			SHEET NO.
6	MG 2002 (243)			290
DGN RLR	STATE	DIST.	COUNTY	
CHK JEG	TEXAS	14	WILLIAMSON	
DSN JSS	CONT.	SECT.	JOB	HIGHWAY NO.
CHK CAD	0683	01	069	SH 45

Pen Tables: I:\Jobs\32058\techprod\rdwy\plots\32058h.pen
Design Filename: I:\Jobs\32058\TECHPROD\Rdwy\Dwg\phs1\45pp0830.dgn

Scale: 100.000000:1.000000
Plotted on: 26-FEB-2003 01:50

MATCH LINE STA 172+00

MATCH LINE STA 184+00

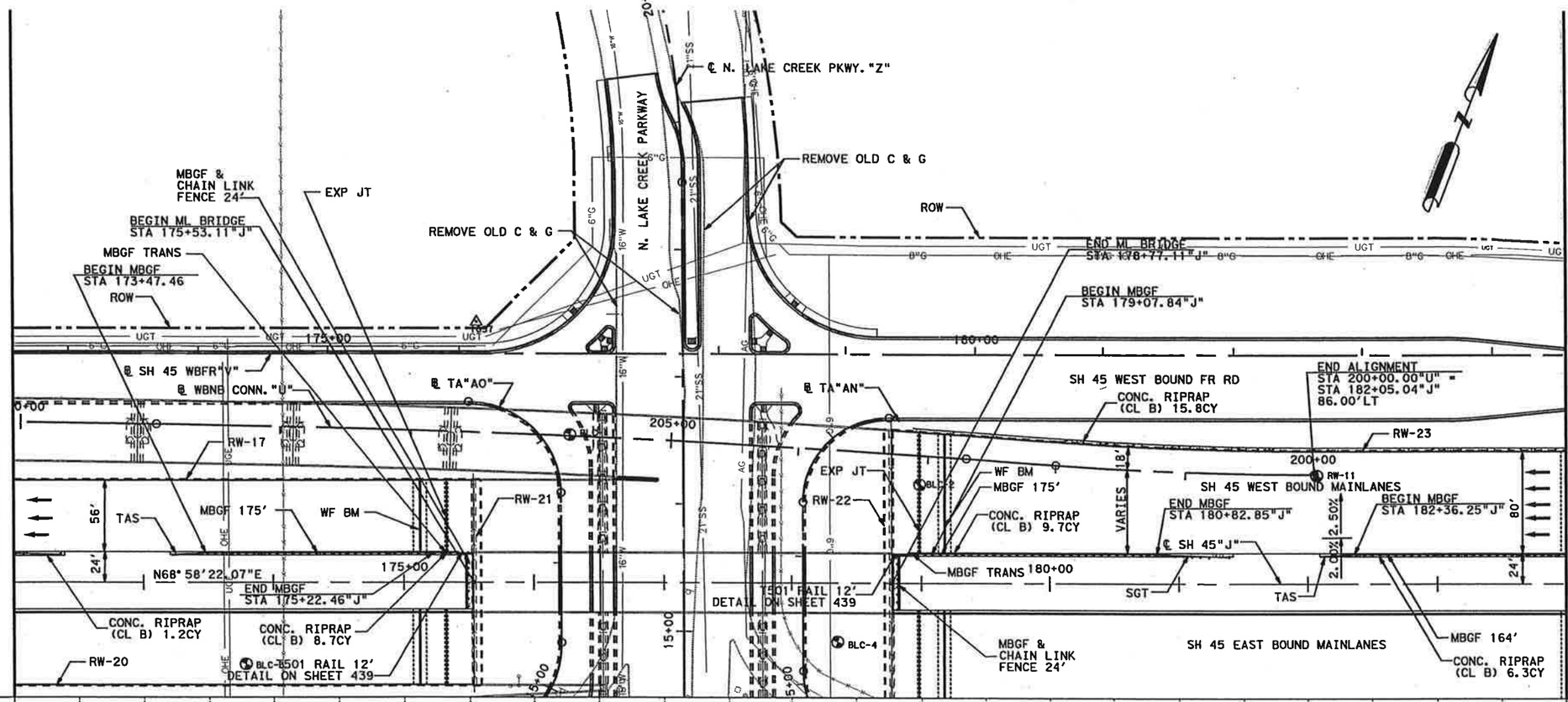

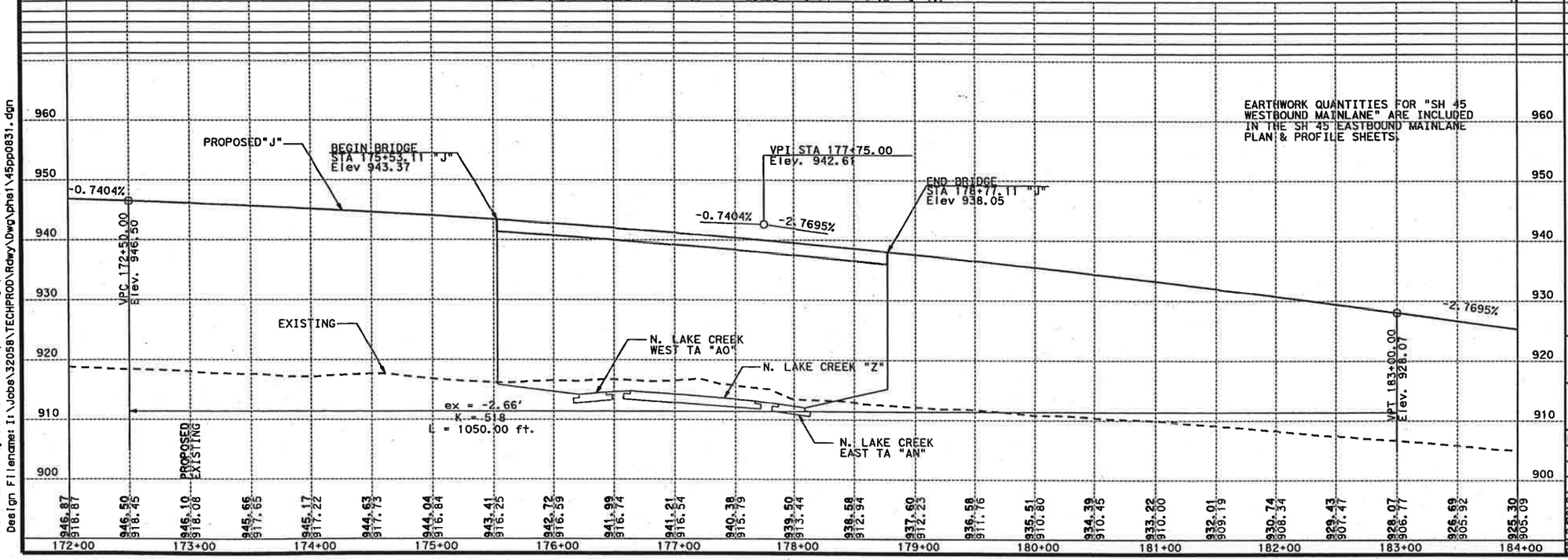

LEGEND

- CONTROL POINT
- BENCHMARK
- BORE HOLE
- HORIZONTAL ALIGNMENT DATA (B1)
- CONC RIPRAP
- CONC UNIT PAVERS
- OVERHEAD SIGN FOUNDATIONS
- CRUSHED NATIVE LIMESTONE
- TRUNCATED DOME CURB RAMP
- WORK BY OTHERS

NOTES:

1. ALL DIMENSIONS AND CALLOUTS ARE TO LIP OF GUTTER, EDGE OF CRCP, OR BASELINE UNLESS OTHERWISE NOTED.
2. REFER TO IRRIGATION PLANS FOR LOCATIONS OF CROSS ROADWAY PIPE SLEEVING.
3. REFER TO HORIZONTAL DATA SHEETS FOR CURVE DATA.
4. REFER TO EROSION CONTROL PLANS FOR SEEDING & TOPSOIL DETAILS.
5. THE INFORMATION SHOWN ON THIS DRAWING CONCERNING TYPE AND LOCATION OF UNDERGROUND AND OVERHEAD UTILITIES IS NOT GUARANTEED TO BE ACCURATE OR ALL INCLUSIVE. THE CONTRACTOR IS RESPONSIBLE FOR MAKING HIS OR HER OWN DETERMINATION AS TO THE TYPE AND LOCATION OF UNDERGROUND UTILITIES AS MAY BE NECESSARY TO AVOID DAMAGE THERETO.

STATE OF TEXAS
JOHN W. STRYBOS
64259
LICENSED
PROFESSIONAL ENGINEER
2-27-2003

SHEET TOTALS			
EST.	FINAL	UNIT	DESCRIPTION

PLAN PROFILE

SH 45 WESTBOUND MAIN LANES STA 172+00 TO STA 184+00

SH 45 / US 183 INTERCHANGE

SCALE: PLAN 1":100'
PROFILE 1":20'

HNTB ARCHITECTS ENGINEERS PLANNERS
The HNTB Companies

Texas Department of Transportation
© 2003 TEXAS TURNPIKE AUTHORITY DIVISION

DRAWING PREPARED BY:	HNTB CORPORATION			
SHEET 6 OF 12				
FED. RD. DIV. NO.	FEDERAL AID PROJECT NO.			SHEET NO.
6	MG 2002 (243)			291
DGN: RLR	STATE	DIST.	COUNTY	
CHK DSN: JEG	TEXAS	14	WILLIAMSON	
CHK DRN: JSS	CONT.	SECT.	JOB	HIGHWAY NO.
CHK QTY: CAD	0683	01	069	SH 45

Pen Table: I:\Jobs\32058\techprod\rdwy\plots\32058h.pen
Design Filename: I:\Jobs\32058\TECHPROD\Rdwy\Dwg\phs1\45pp0831.dgn

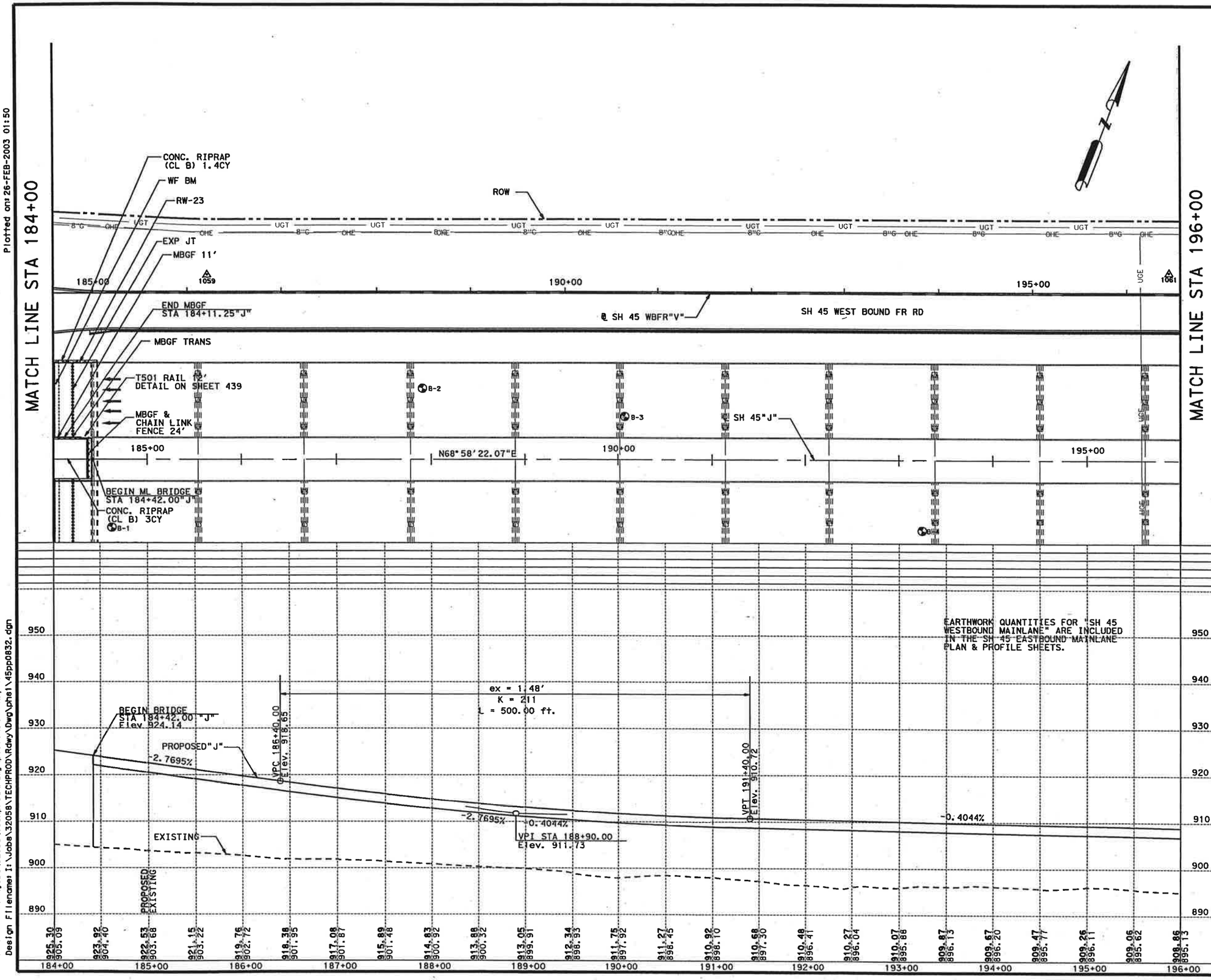

Scale: 100.000000:1.000000
Plotted on: 26-FEB-2003 01:50

Pen Table: I:\Jobs\32058\techprod\rdwy\plots\32058h.pen
Design Filename: I:\Jobs\32058\TECHPROD\Rdwy\Dwg\phs1\45pp0832.dgn

LEGEND

- CONTROL POINT
- BENCHMARK
- BORE HOLE
- HORIZONTAL ALIGNMENT DATA (B1)
- CONC RIPRAP
- CONC UNIT PAVERS
- OVERHEAD SIGN FOUNDATIONS
- CRUSHED NATIVE LIMESTONE
- TRUNCATED DOME CURB RAMP
- WORK BY OTHERS

NOTES:

1. ALL DIMENSIONS AND CALLOUTS ARE TO LIP OF GUTTER, EDGE OF CRCP, OR BASELINE UNLESS OTHERWISE NOTED.
2. REFER TO IRRIGATION PLANS FOR LOCATIONS OF CROSS ROADWAY PIPE SLEEVING.
3. REFER TO HORIZONTAL DATA SHEETS FOR CURVE DATA.
4. REFER TO EROSION CONTROL PLANS FOR SEEDING & TOPSOIL DETAILS.
5. THE INFORMATION SHOWN ON THIS DRAWING CONCERNING TYPE AND LOCATION OF UNDERGROUND AND OVERHEAD UTILITIES IS NOT GUARANTEED TO BE ACCURATE OR ALL INCLUSIVE. THE CONTRACTOR IS RESPONSIBLE FOR MAKING HIS OR HER OWN DETERMINATION AS TO THE TYPE AND LOCATION OF UNDERGROUND UTILITIES AS MAY BE NECESSARY TO AVOID DAMAGE THERETO.

STATE OF TEXAS
JOHN W. STRYBOS
64259
LICENSED
PROFESSIONAL ENGINEER
2-27-2003

SHEET TOTALS			
EST.	FINAL	UNIT	DESCRIPTION

PLAN PROFILE

SH 45 WESTBOUND MAIN LANES STA 184+00 TO STA 196+00

SH 45 / US 183 INTERCHANGE

SCALE: PLAN 1":100'
PROFILE 1":20'

HNTB ARCHITECTS ENGINEERS PLANNERS
The HNTB Companies

Texas Department of Transportation
© 2003 TEXAS TURNPIKE AUTHORITY DIVISION

DRAWING PREPARED BY: HNTB CORPORATION

SHEET 7 OF 12

FED. RD. DIV. NO.	FEDERAL AID PROJECT NO.	SHEET NO.
6	MG 2002 (243)	292

DGN: RLR	STATE	DIST.	COUNTY
CHK DGN: JEG	TEXAS	14	WILLIAMSON

DWG: JSS	CONT.	SECT.	JOB	HIGHWAY NO.
CHK DWG: CAD	0683	01	069	SH 45

Scale: 100.000000:1.000000
Plotted on: 26-FEB-2003 01:50

MATCH LINE STA 196+00

MATCH LINE STA 208+00

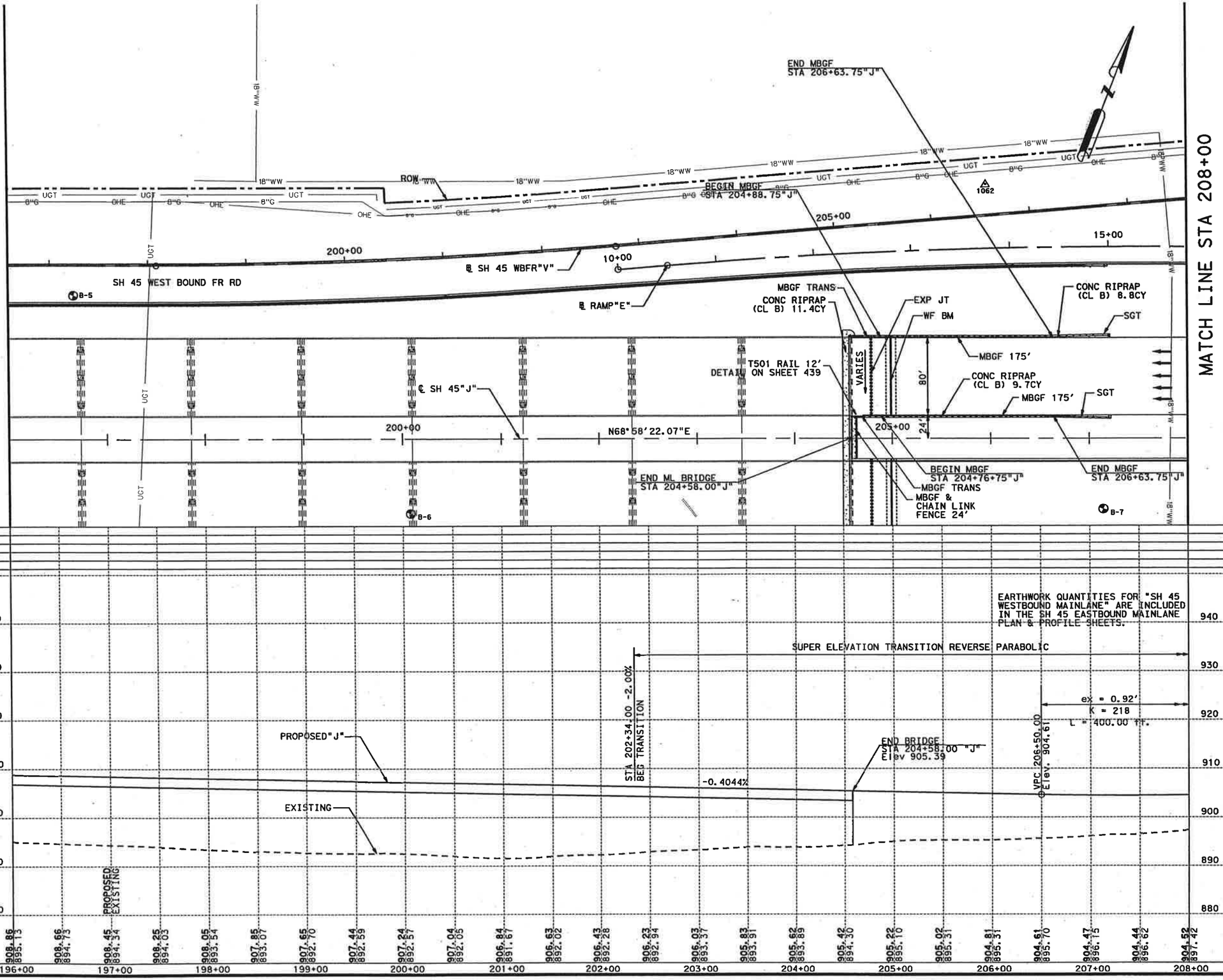

LEGEND

- CONTROL POINT
- BENCHMARK
- BORE HOLE
- HORIZONTAL ALIGNMENT DATA (B1)
- CONC RIPRAP
- CONC UNIT PAVERS
- OVERHEAD SIGN FOUNDATIONS
- CRUSHED NATIVE LIMESTONE
- TRUNCATED DOME CURB RAMP
- WORK BY OTHERS

NOTES:

1. ALL DIMENSIONS AND CALLOUTS ARE TO LIP OF GUTTER, EDGE OF CRCP, OR BASELINE UNLESS OTHERWISE NOTED.
2. REFER TO IRRIGATION PLANS FOR LOCATIONS OF CROSS ROADWAY PIPE SLEEVING.
3. REFER TO HORIZONTAL DATA SHEETS FOR CURVE DATA.
4. REFER TO EROSION CONTROL PLANS FOR SEEDING & TOPSOIL DETAILS.
5. THE INFORMATION SHOWN ON THIS DRAWING CONCERNING TYPE AND LOCATION OF UNDERGROUND AND OVERHEAD UTILITIES IS NOT GUARANTEED TO BE ACCURATE OR ALL INCLUSIVE. THE CONTRACTOR IS RESPONSIBLE FOR MAKING HIS OR HER OWN DETERMINATION AS TO THE TYPE AND LOCATION OF UNDERGROUND UTILITIES AS MAY BE NECESSARY TO AVOID DAMAGE THERETO.

STATE OF TEXAS
JOHN W. STRYBOS
64259
LICENSED
PROFESSIONAL ENGINEER

2-27-2003

SHEET TOTALS			
EST.	FINAL	UNIT	DESCRIPTION

PLAN PROFILE

SH 45 WESTBOUND MAIN LANES STA 196+00 TO STA 208+00

SH 45 / US 183 INTERCHANGE

SCALE: PLAN 1":100'
PROFILE 1":20'

HNTB ARCHITECTS ENGINEERS PLANNERS
The HNTB Companies

Texas Department of Transportation

© 2003 TEXAS TURNPIKE AUTHORITY DIVISION

DRAWING PREPARED BY:	HNTB CORPORATION		
SHEET 8 OF 12			
FED. RD. DIV. NO.	FEDERAL AID PROJECT NO.		SHEET NO.
6	MG 2002 (243)		293
DGN: RLR	STATE	DIST.	COUNTY
CHK DSN: JEG	TEXAS	14	WILLIAMSON
DWG: JSS	CONT.	SECT.	JOB / HIGHWAY NO.
CHK DWG: CAD	0683	01	069 / SH 45

Pen Tablet: I:\Jobs\32058\techprod\rdwy\plots\32058h.pen
Design Filename: I:\Jobs\32058\TECHPROD\Rdwy\Dwg\phel\45pp0833.dgn

Scale: 100.000000:1.000000
Plotted on: 26-FEB-2003 01:50

Pen Tables: \Jobs\32058\techprod\rdwy\plots\32058h.pen
Design Filename: I:\Jobs\32058\TECHPROD\Rdwy\Dwg\phs1\45pp0834.dgn

NOTE: REFER TO DETAIL SHEETS FOR SUPPLEMENTAL PAVEMENT ELEVATION AND X-SLOPE TRANSITION DATA

MATCH LINE STA 208+00

MATCH LINE STA 220+00

ROW

RUTLEDGE SPUR

PERM DRAINAGE EASEMENT

SH 45 WESTBOUND FR RD

℄ SH 45 WBFR"V"

RAMP "E"

℄ RAMP"E"

MONOCURB (TYI)

SH 45 WESTBOUND CASH LANES

SH 45 WESTBOUND AVI LANES

SH 45 EASTBOUND AVI LANES

℄ SH 45"J"

BEGIN TAPER "TU"
STA 208+88.64 "J"
104.00' LT

END TAPER "TU"
STA 215+58.40 "J"
149.72' LT

BEGIN TAPER "TV"
STA 213+39.77 "J"
84.00' LT

BEGIN ML MONOCURB (TYI)
STA 215+72.17 "J"
184.00' LT

CONC. RIPRAP (CL B) 7.9 CY

CONC. RIPRAP (CL B) 18.5 CY

TU1

TV 1

NW-7

VARIES

3.30%

2.50%

6.5'

PC 208+88.86

N68°58'22.07"E

210+00

215+00

220+00

20+00

25+00

24"W

AG

UGT

OHE

8"G

LEGEND

- CONTROL POINT
- BENCHMARK
- BORE HOLE
- HORIZONTAL ALIGNMENT DATA (B1)
- CONC RIPRAP
- CONC UNIT PAVERS
- OVERHEAD SIGN FOUNDATIONS
- CRUSHED NATIVE LIMESTONE
- TRUNCATED DOME CURB RAMP
- WORK BY OTHERS

NOTES:

1. ALL DIMENSIONS AND CALLOUTS ARE TO LIP OF GUTTER, EDGE OF CRCP, OR BASELINE UNLESS OTHERWISE NOTED.
2. REFER TO IRRIGATION PLANS FOR LOCATIONS OF CROSS ROADWAY PIPE SLEEVING.
3. REFER TO HORIZONTAL DATA SHEETS FOR CURVE DATA.
4. REFER TO EROSION CONTROL PLANS FOR SEEDING & TOPSOIL DETAILS.
5. THE INFORMATION SHOWN ON THIS DRAWING CONCERNING TYPE AND LOCATION OF UNDERGROUND AND OVERHEAD UTILITIES IS NOT GUARANTEED TO BE ACCURATE OR ALL INCLUSIVE. THE CONTRACTOR IS RESPONSIBLE FOR MAKING HIS OR HER OWN DETERMINATION AS TO THE TYPE AND LOCATION OF UNDERGROUND UTILITIES AS MAY BE NECESSARY TO AVOID DAMAGE THERETO.

STATE OF TEXAS
JOHN W. STRYBOS
64259
LICENSED PROFESSIONAL ENGINEER

2-27-2003

SHEET TOTALS			
EST.	FINAL	UNIT	DESCRIPTION

EARTHWORK QUANTITIES FOR "SH 45 WESTBOUND MAINLANE" ARE INCLUDED IN THE SH 45 EASTBOUND MAINLANE PLAN & PROFILE SHEETS.

SUPER ELEVATION TRANSITION REVERSE PARABOLIC

FULL SUPER ELEVATION @ MAX = +3.30%

ex = 0.92'
K = 218
L = 400.00 ft.

VPT 210+50.00
Elev 906.66

STA 212+00.00 +3.30%
END TRANSITION

STA 220+00.00 +3.30%
BEGIN TRANSITION

PROPOSED "J"

+1.4306%

-0.4044%

VPI STA 208+50.00
Elev 907.80

EXISTING

VPC 216+50.00
Elev 915.25

ex = -1.93'
K = 414
L = 800.00 ft.

PROPOSED
EXISTING

STA	PROPOSED	EXISTING
208+00	904.52	897.42
209+00	904.72	897.68
210+00	905.03	898.03
211+00	905.46	898.04
212+00	906.01	898.62
213+00	906.66	898.25
214+00	907.38	898.31
215+00	908.09	898.49
216+00	908.81	898.97
217+00	909.53	898.60
218+00	910.24	897.73
219+00	910.96	898.99
220+00	911.67	899.57
	912.39	900.57
	913.10	902.42
	913.82	904.53
	914.53	906.02
	915.25	907.86
	915.93	910.15
	916.56	911.67
	917.12	912.93
	917.63	913.82
	918.07	914.31
	918.45	915.49
	918.78	917.44

950 940 930 920 910 900 890

PLAN PROFILE

SH 45 WESTBOUND MAIN LANES STA 208+00 TO STA 220+00

SH 45 / US 183 INTERCHANGE

SCALE: PLAN 1":100'
PROFILE 1":20'

HNTB ARCHITECTS ENGINEERS PLANNERS
The HNTB Companies

Texas Department of Transportation
© 2003 TEXAS TURNPIKE AUTHORITY DIVISION

DRAWING PREPARED BY:	HNTB CORPORATION			
SHEET 9 OF 12				
FED. RD. DIV. NO.	FEDERAL AID PROJECT NO.			SHEET NO.
6	MG 2002 (243)			294
DGN: RLR	STATE	DIST.	COUNTY	
CHK. JEG	TEXAS	14	WILLIAMSON	
DWN: JSS	CONT.	SECT.	JOB	HIGHWAY NO.
CHK. CAD	0683	01	069	SH 45

Scale: 100.000000:1.000000
Plotted on: 26-FEB-2003 01:50

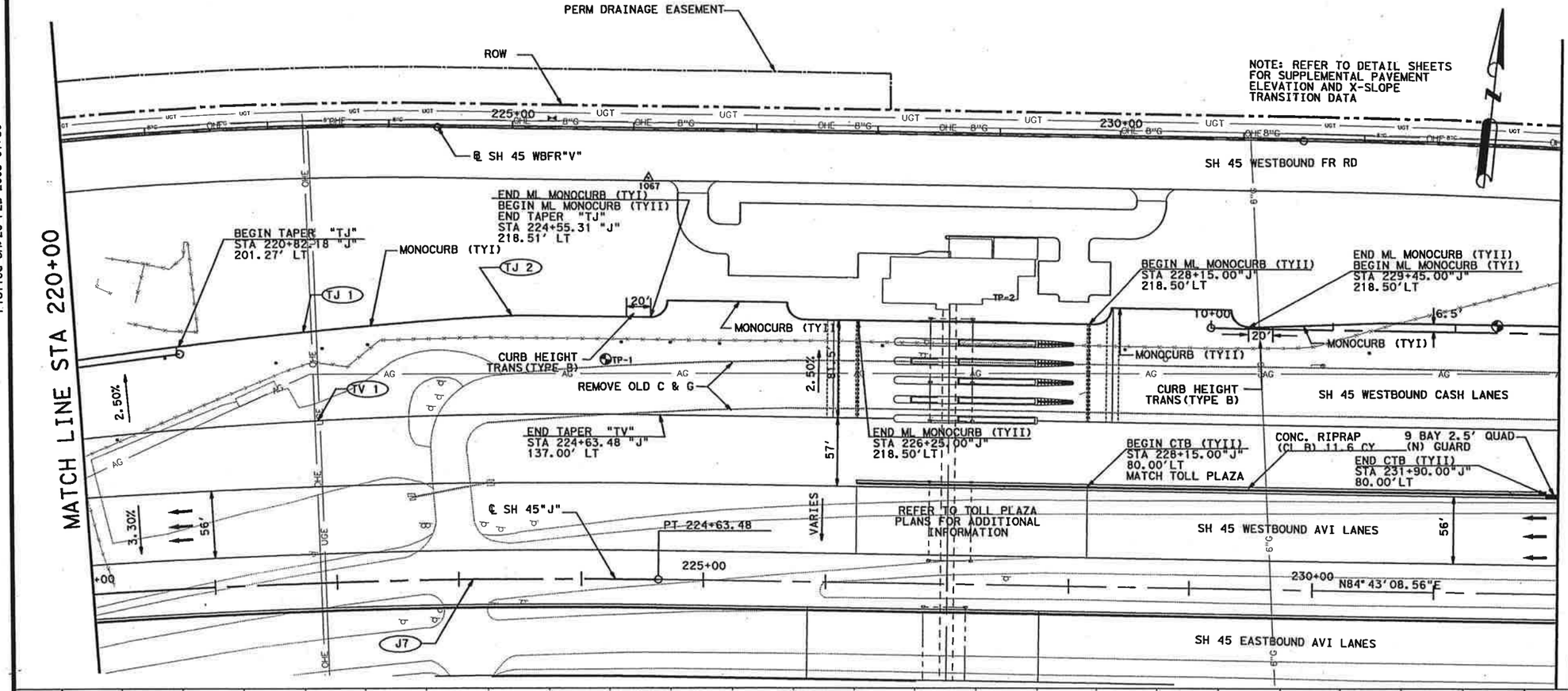

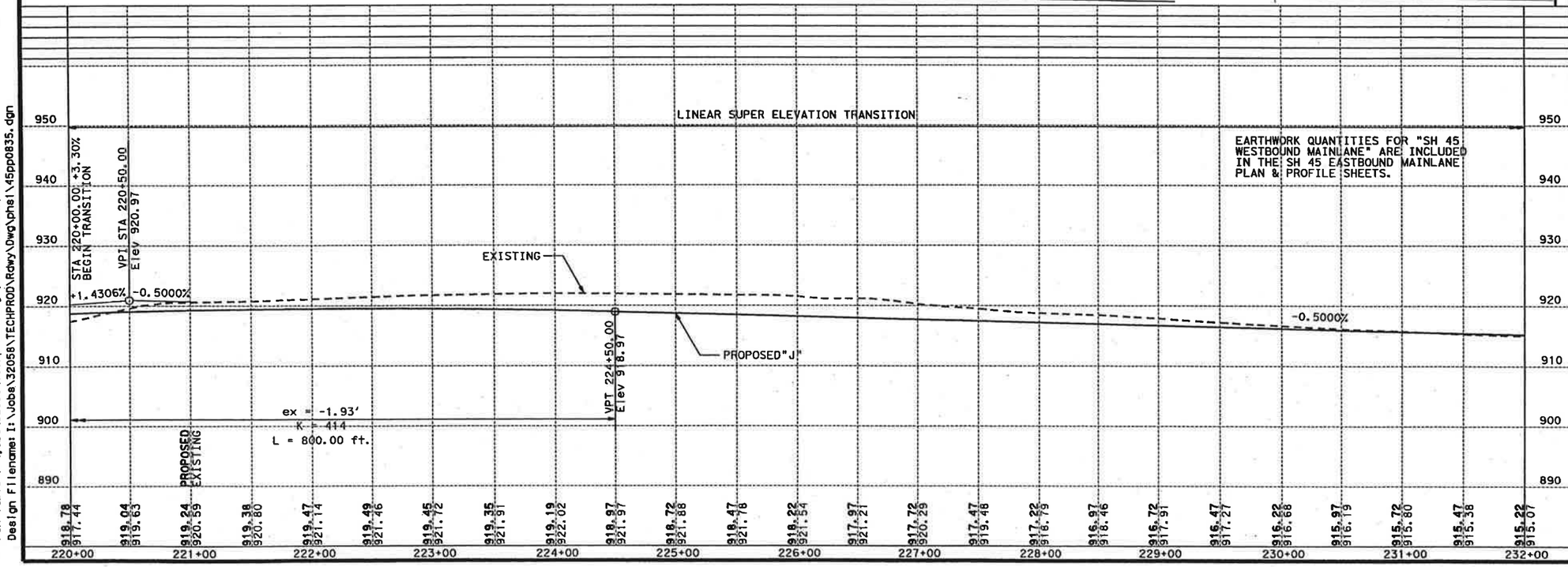

LEGEND

- CONTROL POINT
- BENCHMARK
- BORE HOLE
- HORIZONTAL ALIGNMENT DATA (B1)
- CONC RIPRAP
- CONC UNIT PAVERS
- OVERHEAD SIGN FOUNDATIONS
- CRUSHED NATIVE LIMESTONE
- TRUNCATED DOME CURB RAMP
- WORK BY OTHERS

NOTES:

1. ALL DIMENSIONS AND CALLOUTS ARE TO LIP OF GUTTER, EDGE OF CRCP, OR BASELINE UNLESS OTHERWISE NOTED.
2. REFER TO IRRIGATION PLANS FOR LOCATIONS OF CROSS ROADWAY PIPE SLEEVING.
3. REFER TO HORIZONTAL DATA SHEETS FOR CURVE DATA.
4. REFER TO EROSION CONTROL PLANS FOR SEEDING & TOPSOIL DETAILS.
5. THE INFORMATION SHOWN ON THIS DRAWING CONCERNING TYPE AND LOCATION OF UNDERGROUND AND OVERHEAD UTILITIES IS NOT GUARANTEED TO BE ACCURATE OR ALL INCLUSIVE. THE CONTRACTOR IS RESPONSIBLE FOR MAKING HIS OR HER OWN DETERMINATION AS TO THE TYPE AND LOCATION OF UNDERGROUND UTILITIES AS MAY BE NECESSARY TO AVOID DAMAGE THERETO.

STATE OF TEXAS
JOHN W. STRYBOS
64259
LICENSED
PROFESSIONAL ENGINEER
2-27-2003

SHEET TOTALS

EST.	FINAL	UNIT	DESCRIPTION

PLAN PROFILE

SH 45 WESTBOUND MAIN LANES STA 220+00 TO STA 232+00

SH 45 / US 183 INTERCHANGE

SCALE: PLAN 1":100'
PROFILE 1":20'

HNTB ARCHITECTS ENGINEERS PLANNERS
The HNTB Companies

Texas Department of Transportation
© 2003 TEXAS TURNPIKE AUTHORITY DIVISION

DRAWING PREPARED BY:	HNTB CORPORATION			
SHEET 10 OF 12				
FED. RD. DIV. NO.	FEDERAL AID PROJECT NO.			SHEET NO.
6	MG 2002 (243)			295
DGN: RLR	STATE	DIST.	COUNTY	
CHK: JEG	TEXAS	14	WILLIAMSON	
DWN: JSS	CONT.	SECT.	JOB	HIGHWAY NO.
CHK: CAD	0683	01	069	SH 45

Pen Table: I:\Jobs\32058\techprod\rdwy\plots\32058h.pen
Design Filename: I:\Jobs\32058\TECHPROD\Rdwy\Dwg\phs1\45pp0835.dgn

Scale: 100.000000:1.000000
Plotted on: 26-FEB-2003 15:10

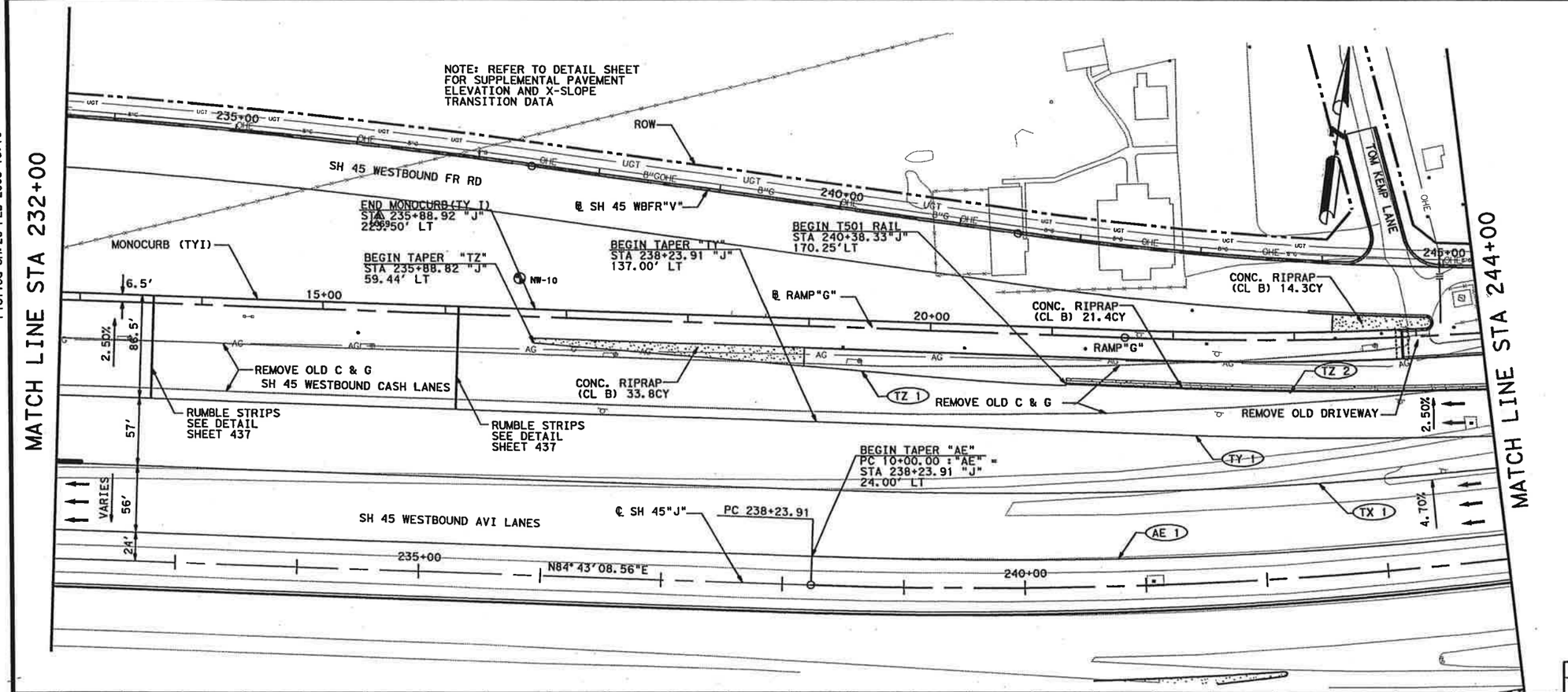

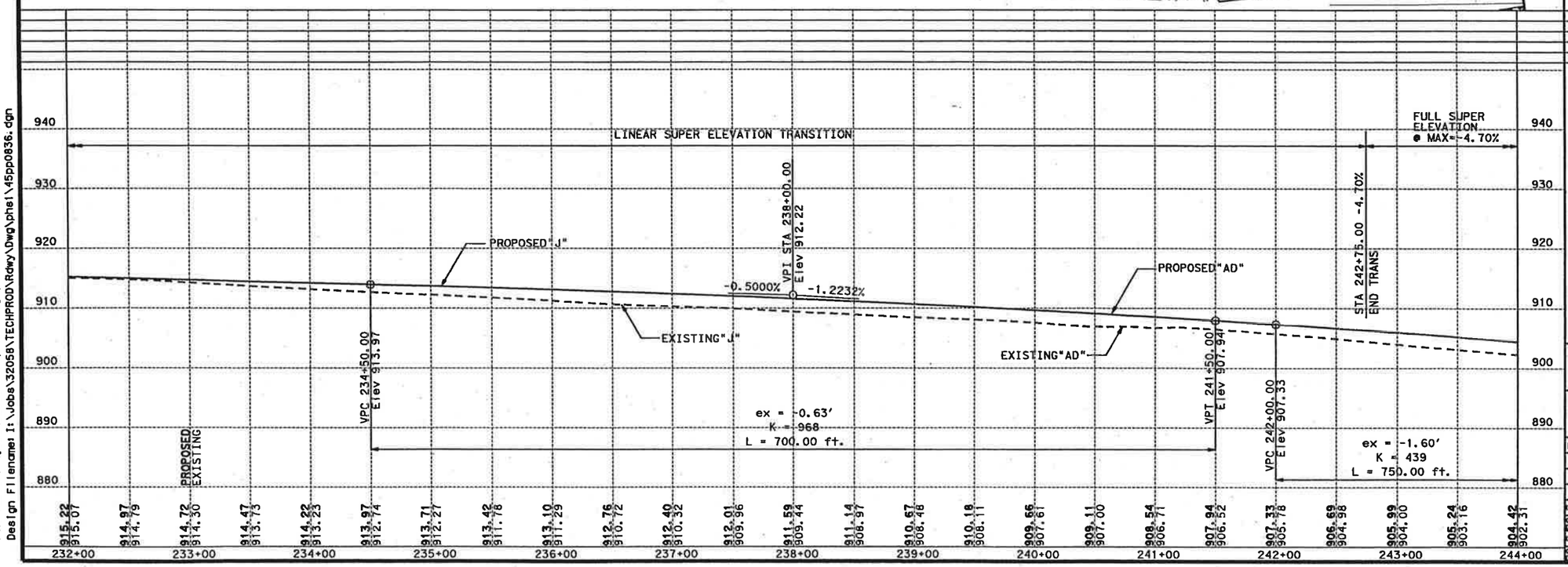

LEGEND

- CONTROL POINT
- BENCHMARK
- BORE HOLE
- HORIZONTAL ALIGNMENT DATA (B1)
- CONC RIPRAP
- CONC UNIT PAVERS
- OVERHEAD SIGN FOUNDATIONS
- CRUSHED NATIVE LIMESTONE
- TRUNCATED DOME CURB RAMP
- WORK BY OTHERS

NOTES:

1. ALL DIMENSIONS AND CALLOUTS ARE TO LIP OF GUTTER, EDGE OF CRCP, OR BASELINE UNLESS OTHERWISE NOTED.
2. REFER TO IRRIGATION PLANS FOR LOCATIONS OF CROSS ROADWAY PIPE SLEEVING.
3. REFER TO HORIZONTAL DATA SHEETS FOR CURVE DATA.
4. REFER TO EROSION CONTROL PLANS FOR SEEDING & TOPSOIL DETAILS.
5. THE INFORMATION SHOWN ON THIS DRAWING CONCERNING TYPE AND LOCATION OF UNDERGROUND AND OVERHEAD UTILITIES IS NOT GUARANTEED TO BE ACCURATE OR ALL INCLUSIVE. THE CONTRACTOR IS RESPONSIBLE FOR MAKING HIS OR HER OWN DETERMINATION AS TO THE TYPE AND LOCATION OF UNDERGROUND UTILITIES AS MAY BE NECESSARY TO AVOID DAMAGE THERETO.

STATE OF TEXAS
JOHN W. STRYBOS
64259
LICENSED
PROFESSIONAL ENGINEER

2-27-2003

SHEET TOTALS			
EST.	FINAL	UNIT	DESCRIPTION

PLAN PROFILE

SH 45 WESTBOUND MAIN LANES STA 232+00 TO STA 244+00

SH 45 / US 183 INTERCHANGE

SCALE: PLAN 1":100'
PROFILE 1":20'

HNTB ARCHITECTS ENGINEERS PLANNERS
The HNTB Companies

Texas Department of Transportation

© 2003 TEXAS TURNPIKE AUTHORITY DIVISION

DRAWING PREPARED BY:	HNTB CORPORATION			
SHEET 11 OF 12				
FED. RD. DIV. NO.	FEDERAL AID PROJECT NO.			SHEET NO.
6	MG 2002 (243)			296
DGN: RLR	STATE	DIST.	COUNTY	
CHK: JEG	TEXAS	14	WILLIAMSON	
DWN: JSS	CONT.	SECT.	JOB	HIGHWAY NO.
CHK: CAD	0683	01	069	SH 45

Pen Tablet: \Jobs\32058\techprod\rdwy\plots\32058h.pen
Design Filename: I:\Jobs\32058\TECHPROD\Rdwy\Dwg\phe1\45pp0836.dgn

Scale: 100.000000:1.000000
Plotted on: 26-FEB-2003 01:52

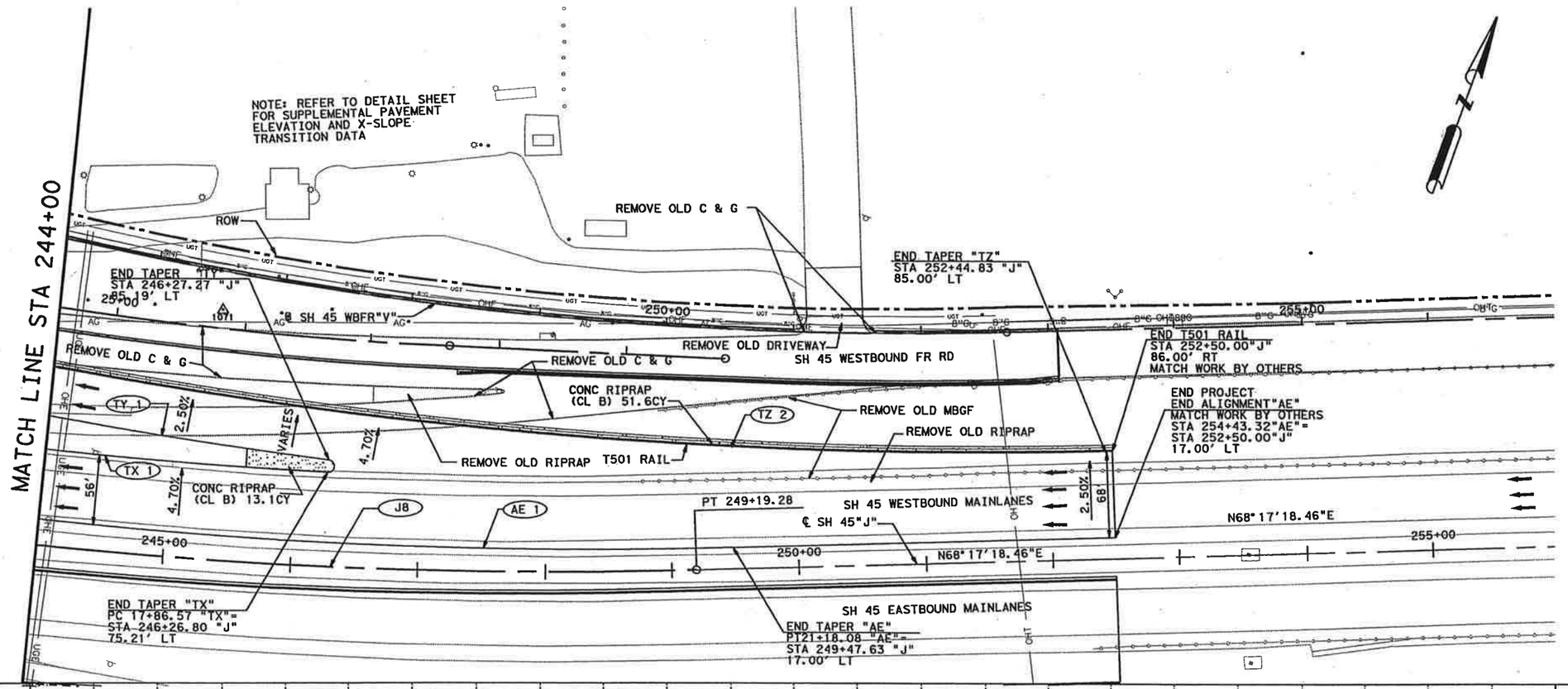

LEGEND

- CONTROL POINT
- BENCHMARK
- BORE HOLE
- HORIZONTAL ALIGNMENT DATA (B1)
- CONC RIPRAP
- CONC UNIT PAVERS
- OVERHEAD SIGN FOUNDATIONS
- CRUSHED NATIVE LIMESTONE
- TRUNCATED DOME CURB RAMP
- WORK BY OTHERS

NOTES:

1. ALL DIMENSIONS AND CALLOUTS ARE TO LIP OF GUTTER, EDGE OF CRCP, OR BASELINE UNLESS OTHERWISE NOTED.
2. REFER TO IRRIGATION PLANS FOR LOCATIONS OF CROSS ROADWAY PIPE SLEEVING.
3. REFER TO HORIZONTAL DATA SHEETS FOR CURVE DATA.
4. REFER TO EROSION CONTROL PLANS FOR SEEDING & TOPSOIL DETAILS.
5. THE INFORMATION SHOWN ON THIS DRAWING CONCERNING TYPE AND LOCATION OF UNDERGROUND AND OVERHEAD UTILITIES IS NOT GUARANTEED TO BE ACCURATE OR ALL INCLUSIVE. THE CONTRACTOR IS RESPONSIBLE FOR MAKING HIS OR HER OWN DETERMINATION AS TO THE TYPE AND LOCATION OF UNDERGROUND UTILITIES AS MAY BE NECESSARY TO AVOID DAMAGE THERETO.

STATE OF TEXAS
JOHN W. STRYBOS
64259
LICENSED
PROFESSIONAL ENGINEER

2-27-2003

SHEET TOTALS			
EST.	FINAL	UNIT	DESCRIPTION

PLAN PROFILE

SH 45 WESTBOUND MAIN LANES STA 244+00 TO STA 252+50

SH 45 / US 183 INTERCHANGE

SCALE: PLAN 1":100'
PROFILE 1":20'

HNTB ARCHITECTS ENGINEERS PLANNERS
The HNTB Companies

Texas Department of Transportation
© 2003 TEXAS TURNPIKE AUTHORITY DIVISION

DRAWING PREPARED BY:	HNTB CORPORATION		
SHEET 12 OF 12			
FED. RD. DIV. NO.	FEDERAL AID PROJECT NO.		SHEET NO.
6	MG 2002 (243)		297
DGN: RLR	STATE	DIST.	COUNTY
CHK: JEG	TEXAS	14	WILLIAMSON
DWN: JSS	CONT.	SECT.	JOB / HIGHWAY NO.
CHK: CAD	0683	01	069 / SH 45

Pen Tables: I:\Jobs\32058\techprod\rdwy\plots\32058h.pen
Design Filename: I:\Jobs\32058\TECHPROD\Rdwy\Dwg\phe1\45pp0837.dgn

AREA ID	AREA (acres)	C	Tc ACTUAL (min)	Tc USED (min)	I10 (in/hr)	I25 (in/hr)	Q10 (cfs)	Q25 (cfs)	COMMENTS
OS-1	6.52	0.90	32	32	4.340	5.109	25.46	30.00	To Line C
OS-2	27.38	0.90	34	34	4.181	4.923	103.02	121.31	To Line D (See sheets 534-540)
OS-2A	20.79	0.90	10.8	10.8	7.720	9.034	144.47	169.04	To Line D (See sheets 534-540)
OS-2B	22.77	0.90	9.7	10	7.978	9.333	163.49	191.26	To Line D (See sheets 534-540)
OS-2C	5.63	0.90	6.9	10	7.978	9.333	40.42	47.29	To Line D (See sheets 534-540)
OS-2D	2.27	0.90	6.4	10	7.978	9.333	16.30	19.07	To Line D (See sheets 534-540)
OS-3	125.09	0.90	18.3	18.3	5.982	7.019	673.45	790.21	To existing dual 6'x10' box culvert
OS-4	3.90	0.90	2.1	10	7.978	9.333	28.00	32.76	To North detention pond
OS-5	207.10	~	19.08	19.08	~	~	669.18	856.93	To North Branch detention pond
OS-6	219.33	~	21.48	21.48	~	~	667.46	852.71	To North Branch detention pond
OS-7	39.04	0.35	15.3	15.3	6.560	7.689	89.64	105.06	To proposed 2-4'x3' box culverts
OS-7A	9.99	0.35	11	11	7.658	8.963	26.78	31.34	To North Branch detention pond
OS-8	14.75	0.35	14.5	14.5	6.736	7.894	34.77	40.75	To North Branch, south of culverts
OS-9	0.48	0.35	9.11	10	7.978	9.333	1.34	1.57	To North Branch, south of culverts

*RUNOFF VALUES FOR AREAS OS-5 AND OS-6 CALCULATED WITH HEC-HMS.

***OS-183 RUNOFF IS COLLECTED BY SECTION 9 AND EXISTING US 183 DRAINAGE SYSTEMS.

Project Location Williamson County
Intensity Variables for $I=b/(tc+d)^e$

Frequency	e	b	d
10	0.777	77	8.5
25	0.769	88	8.5
100	0.751	103	8.0

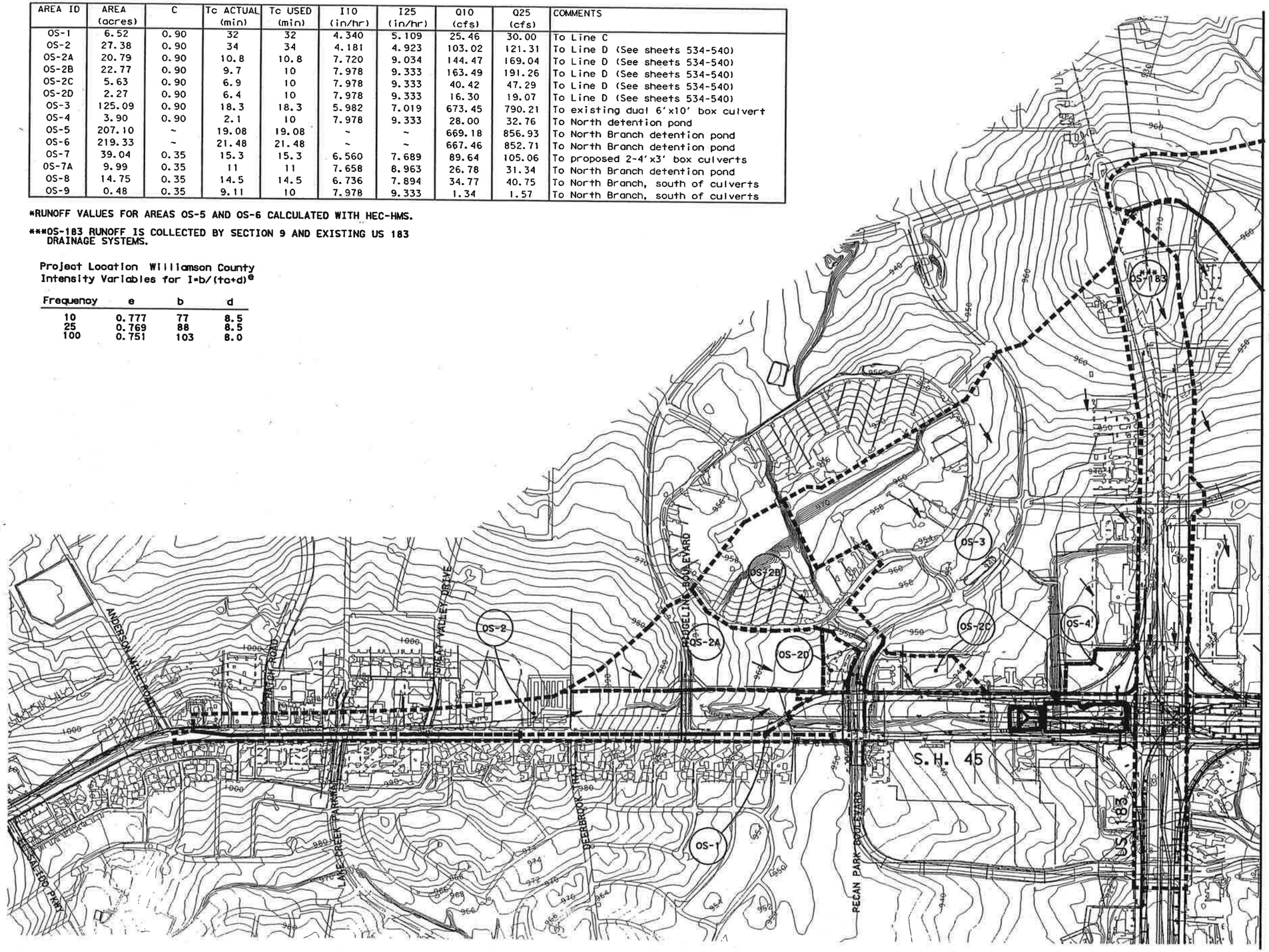

LEGEND:

- DRAINAGE DIVIDE
- OS-5 — OFFSITE DRAINAGE AREA
- 920 — EXISTING CONTOUR
- FLOW DIRECTION
- NEW ROADWAY

NOTES:

1. TOPOGRAPHY BASED ON CITY OF AUSTIN 1997 TOPOGRAPHIC INFORMATION
2. SEE MAIN DETENTION POND HYDRUALIC DATA SHEET FOR HYDROLOGY AND HYDRAULICS. (SHEET 687)

STATE OF TEXAS
ANTHONY J. SCHNEIDER
71848
LICENSED
PROFESSIONAL ENGINEER

4/21/03

OFFSITE DRAINAGE AREA MAP

SH 45 / US 183 INTERCHANGE

SCALE: 1": 800'

HNTB ARCHITECTS ENGINEERS PLANNERS
The HNTB Companies

Texas Department of Transportation
© 2003 TEXAS TURNPIKE AUTHORITY DIVISION

DRAWING PREPARED BY:			HNTB CORPORATION	
SHEET 1 OF 2			45DM08OS1.DGN	
FED. RD. DIV. NO.	FEDERAL AID PROJECT NO.			SHEET NO.
6	MG 2002 (243)			515
DSN: HKA	STATE	DIST.	COUNTY	
CHK DSN: AJS	TEXAS	14	WILLIAMSON	
DRN: HKA	CONT.	SECT.	JOB	HIGHWAY NO.
CHK DRN: AJS	0683	01	069	SH 45

Scale: 800.000000:1.000000
Plotted on: 20-FEB-2003 18:05
Pen Tables: \\...32058\Teahprod\rdwy\plate\32058drng.pen
Design Filename: I:\Jobs\32058\Teahprod\Rdwy\Dwg\Phal\Drng\45dm08os1.dgn

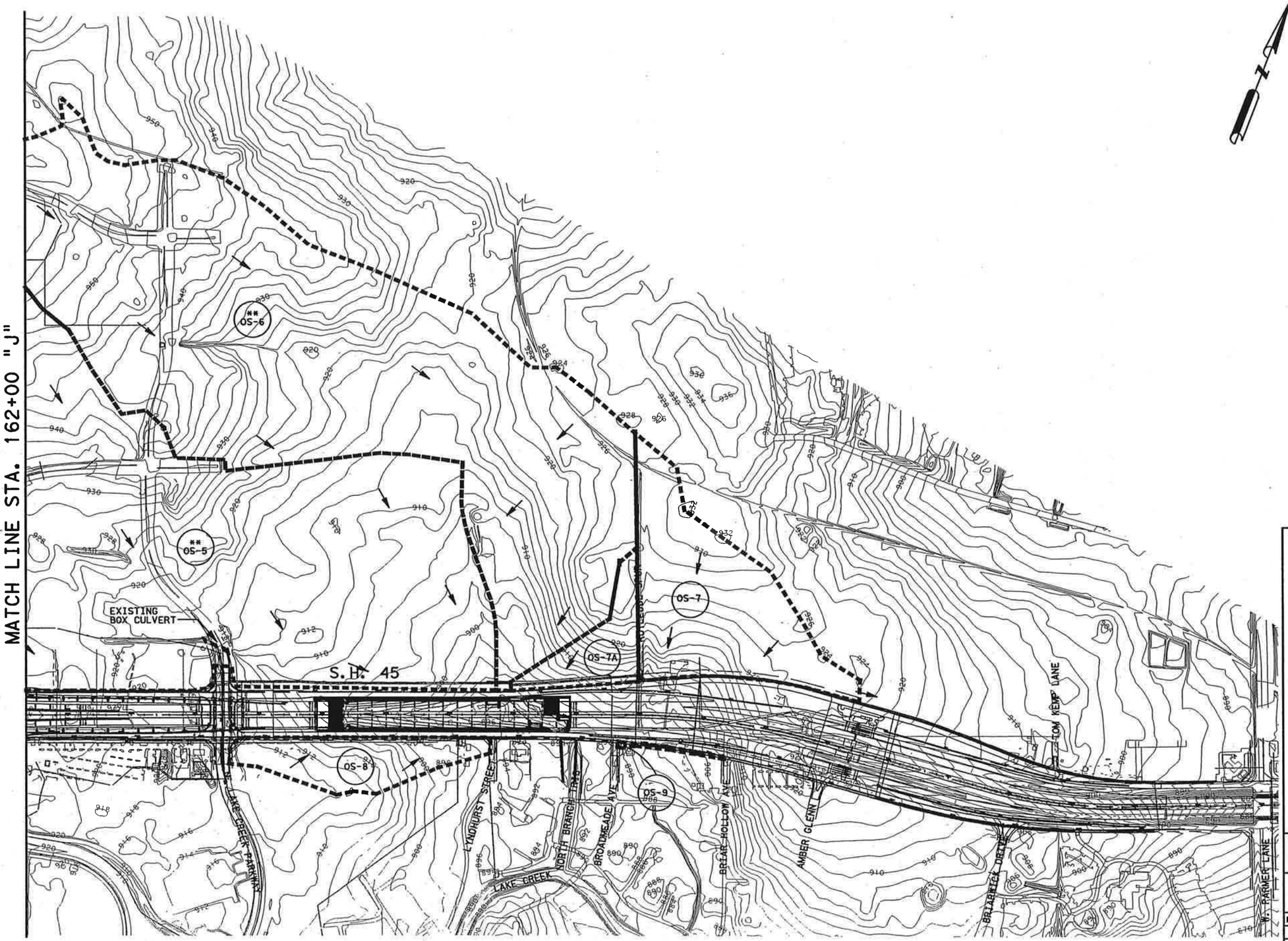

** DRAINAGE AREAS WERE DEFINED FROM FUTURE LYNDHURST DEVELOPMENT UPSTREAM OF PROPOSED SH45

LEGEND:

- - - - - - - DRAINAGE DIVIDE
- OS-5 OFFSITE DRAINAGE AREA
- —920— EXISTING CONTOUR
- FLOW DIRECTION
- NEW ROADWAY

NOTES:

1. TOPOGRAPHY BASED ON CITY OF AUSTIN 1997 TOPOGRAPHIC INFORMATION
2. SEE NORTH BRANCH DETENTION POND HYDRAULIC DATA SHEET FOR HYDROLOGY AND HYDRAULICS. (SHEET 688)

STATE OF TEXAS
ANTHONY J. SCHNEIDER
71848
LICENSED
PROFESSIONAL ENGINEER

2/21/03

OFFSITE DRAINAGE AREA MAP

SH 45 / US 183 INTERCHANGE

SCALE: 1":800'

HNTB ARCHITECTS ENGINEERS PLANNERS
The HNTB Companies

Texas Department of Transportation
© 2003 TEXAS TURNPIKE AUTHORITY DIVISION

DRAWING PREPARED BY:	HNTB CORPORATION			
SHEET 2 OF 2	45DM08OS2.DGN			
FED. RD. DIV. NO.	FEDERAL AID PROJECT NO.			SHEET NO.
6	MG 2002 (243)			516
DGN: HKA	STATE	DIST.	COUNTY	
CHK DGN: AJS	TEXAS	14	WILLIAMSON	
DWG: HKA	CONT.	SECT.	JOB	HIGHWAY NO.
CHK DWG: AJS	0683	01	069	SH 45

Scale: 800.000000:1.000000
Plotted on: 20-FEB-2003 18:06

Pen Table: I:\J...\32058\techprod\rdwy\plots\32058drng.pen
Design Filename: I:\Jobs\32058\Techprod\Rdwy\Dwg\Phs1\Drng\45dm08os2.dgn

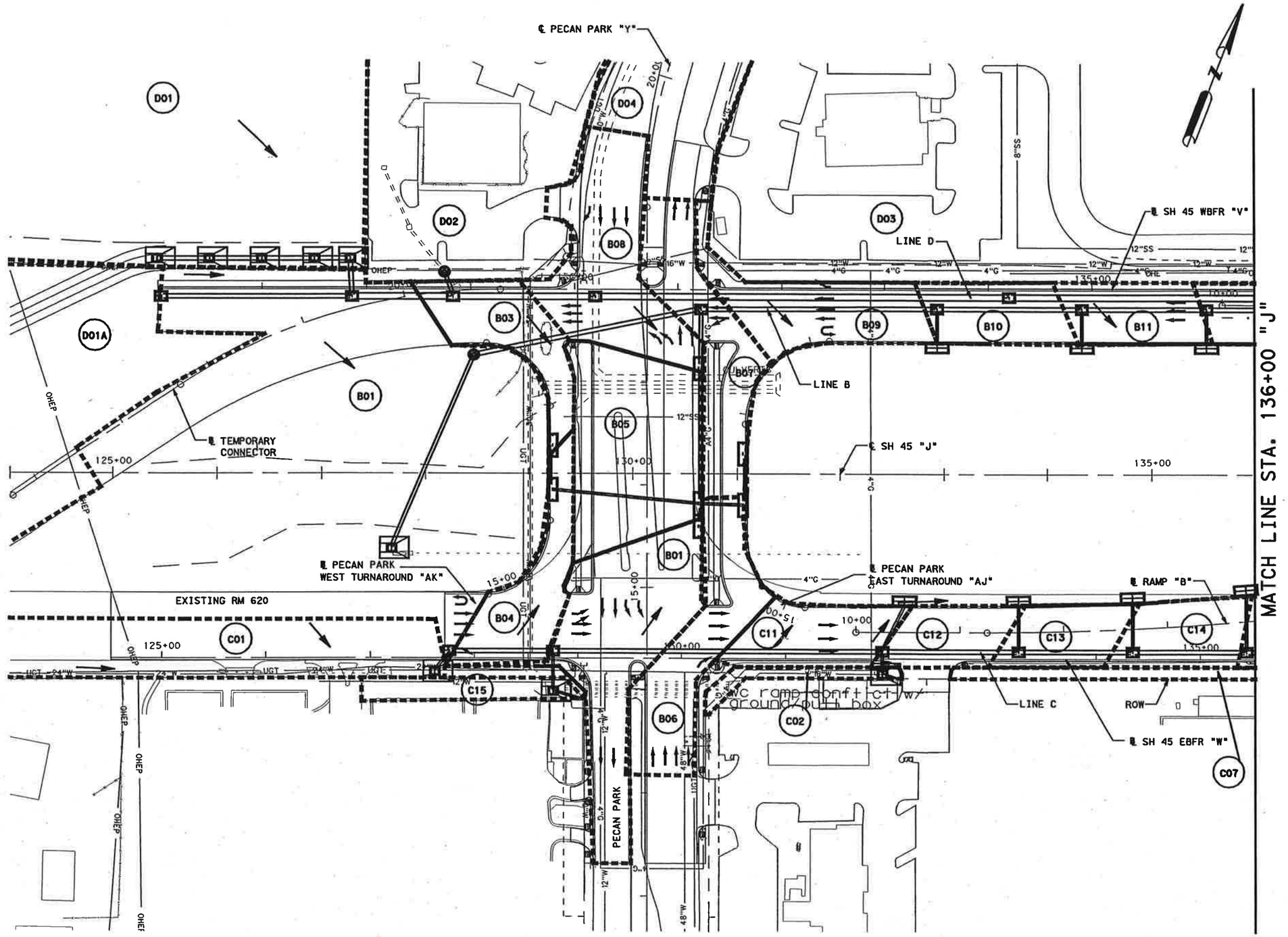

LEGEND

- AREA DESIGNATION
- RUNOFF FLOW DIRECTION
- AREA BOUNDARY
- CURB INLET TY IR & IIR
- CURB INLET TY I & II
- DROP INLET TY AAD
- DROP INLET TY AD
- DROP INLET TY II
- MANHOLE TY A
- MANHOLE TY M
- EXISTING STORMSEWER

NOTES:

1. THE CONTRACTOR'S ATTENTION IS DIRECTED TO THE FACT THAT BOTH OVERHEAD AND UNDERGROUND UTILITIES ARE APPROXIMATE AND SHALL BE VERIFIED BY THE CONTRACTOR BEFORE BEGINNING CONSTRUCTION OPERATIONS.
2. INLETS AND MANHOLES SHOWN AT TWICE THEIR ACTUAL SIZE FOR CLARITY.

STATE OF TEXAS
ANTHONY J. SCHNEIDER
71848
LICENSED PROFESSIONAL ENGINEER

2/21/03

DRAINAGE AREA MAP LINE B

SH 45
STA. 124+00 TO STA. 136+00

SH 45 / US 183 INTERCHANGE

SCALE: PLAN 1":100'

HNTB ARCHITECTS ENGINEERS PLANNERS
The HNTB Companies

Texas Department of Transportation
© 2003 TEXAS TURNPIKE AUTHORITY DIVISION

DRAWING PREPARED BY:	HNTB CORPORATION			
SHEET 1 OF 9	45DM08B01.dgn			
FED. RD. DIV. NO.	FEDERAL AID PROJECT NO.			SHEET NO.
6	MG 2002 (243)			517
DSN: HKA	STATE	DIST.	COUNTY	
CHK. DSN: AJS	TEXAS	14	WILLIAMSON	
DWN: HKA	CONT.	SECT.	JOB	HIGHWAY NO.
CHK. DWN: AJS	0683	01	069	SH 45

Scale: 100.000000:1.000000
Plotted on: 20-FEB-2003 18:06
Pen Table: I:\Jobs\32058\Techprod\rdwy\plots\32058drng.pen
Design Filename: I:\Jobs\32058\Techprod\Rdwy\Dwg\Phs1\Drng\45dm08801.dgn

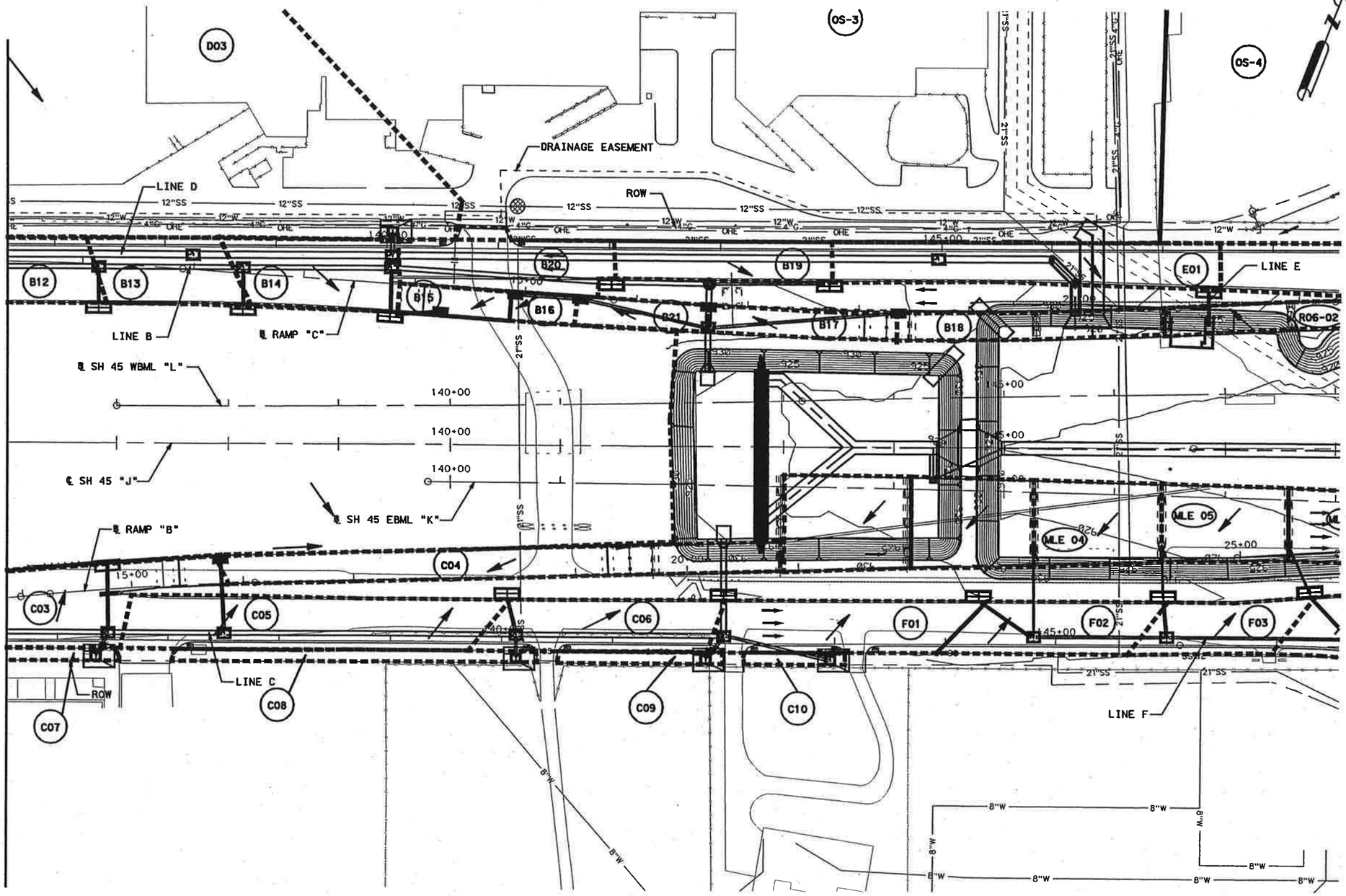

LEGEND

- AREA DESIGNATION
- RUNOFF FLOW DIRECTION
- AREA BOUNDARY
- CURB INLET TY IR & IIR
- CURB INLET TY I & II
- DROP INLET TY AAD
- DROP INLET TY AD
- DROP INLET TY II
- MANHOLE TY A
- MANHOLE TY M
- EXISTING STORMSEWER

NOTES:

1. THE CONTRACTOR'S ATTENTION IS DIRECTED TO THE FACT THAT BOTH OVERHEAD AND UNDERGROUND UTILITIES ARE APPROXIMATE AND SHALL BE VERIFIED BY THE CONTRACTOR BEFORE BEGINNING CONSTRUCTION OPERATIONS.
2. INLETS AND MANHOLES SHOWN AT TWICE THEIR ACTUAL SIZE FOR CLARITY.

STATE OF TEXAS
ANTHONY J. SCHNEIDER
71848
LICENSED
PROFESSIONAL ENGINEER

2/21/03

DRAINAGE AREA MAP
LINE B

SH 45
STA. 136+00 TO STA. 148+00

SH 45 / US 183 INTERCHANGE

SCALE: PLAN 1":100'

HNTB ARCHITECTS ENGINEERS PLANNERS
The HNTB Companies

Texas Department of Transportation
© 2003 TEXAS TURNPIKE AUTHORITY DIVISION

DRAWING PREPARED BY:	HNTB CORPORATION			
SHEET 2 OF 9	45DM08B02.dgn			
FED. RD. DIV. NO.	FEDERAL AID PROJECT NO.			SHEET NO.
6	MG 2002 (243)			518
DGN: HKA	STATE	DIST.	COUNTY	
CHK DGN: AJS	TEXAS	14	WILLIAMSON	
DWG: HKA	CONT.	SECT.	JOB	HIGHWAY NO.
CHK DWG: AJS	0683	01	069	SH 45

Scale: 100.000000:1.000000
Plotted on: 20-FEB-2003 18:06

Pen Table: I:\J...\32058\techprod\rdwy\plots\32058drng.pen
Design Filename: I:\Jobs\32058\Techprod\Rdwy\Dwg\Phs1\Drng\45dm08B02.dgn

Scale: 100.000000:1.000000
Plotted on: 20-FEB-2003 18:08

Pen Table: I:\Jobs\32058\Techprod\rdwy\plots\32058drng.pen
Design Filename: I:\Jobs\32058\Techprod\Rdwy\Dwg\Phs1\Drng\45dp08B01.dgn

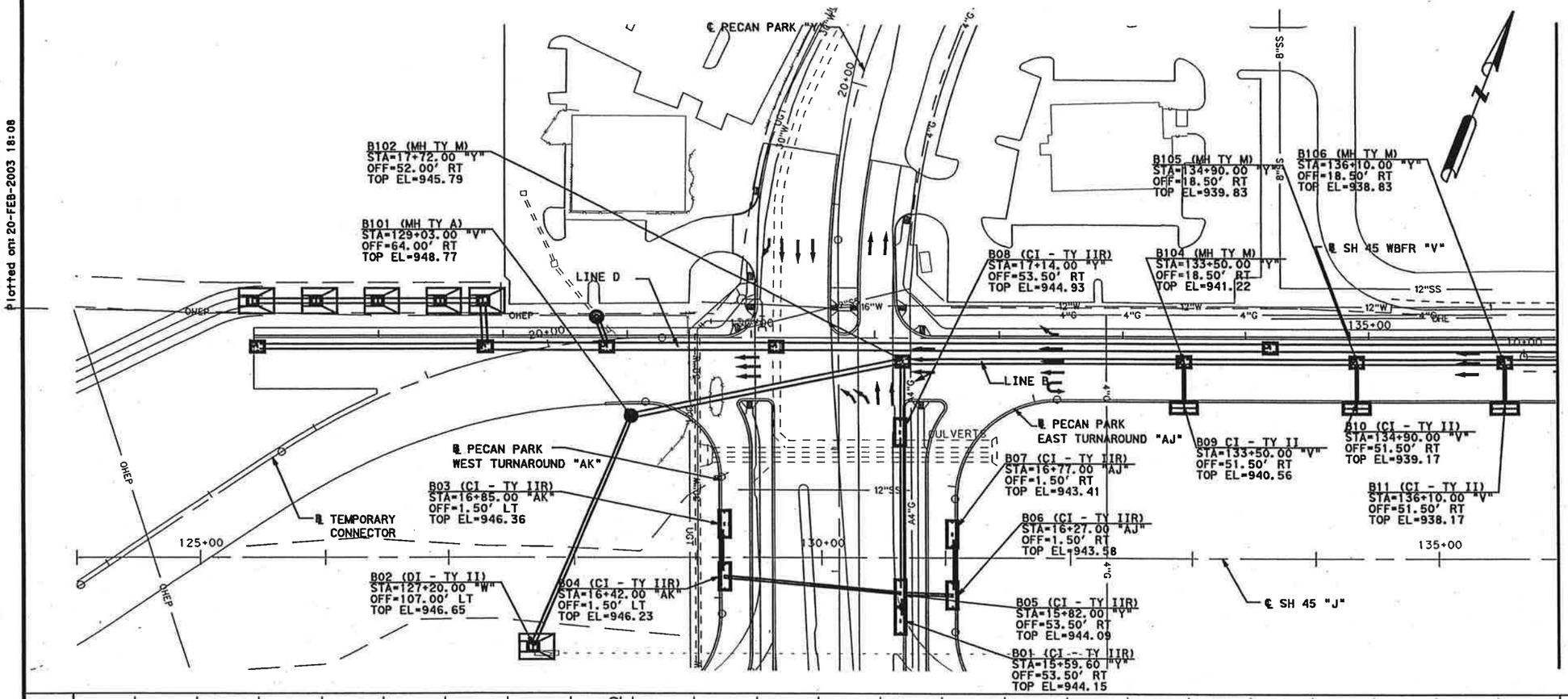

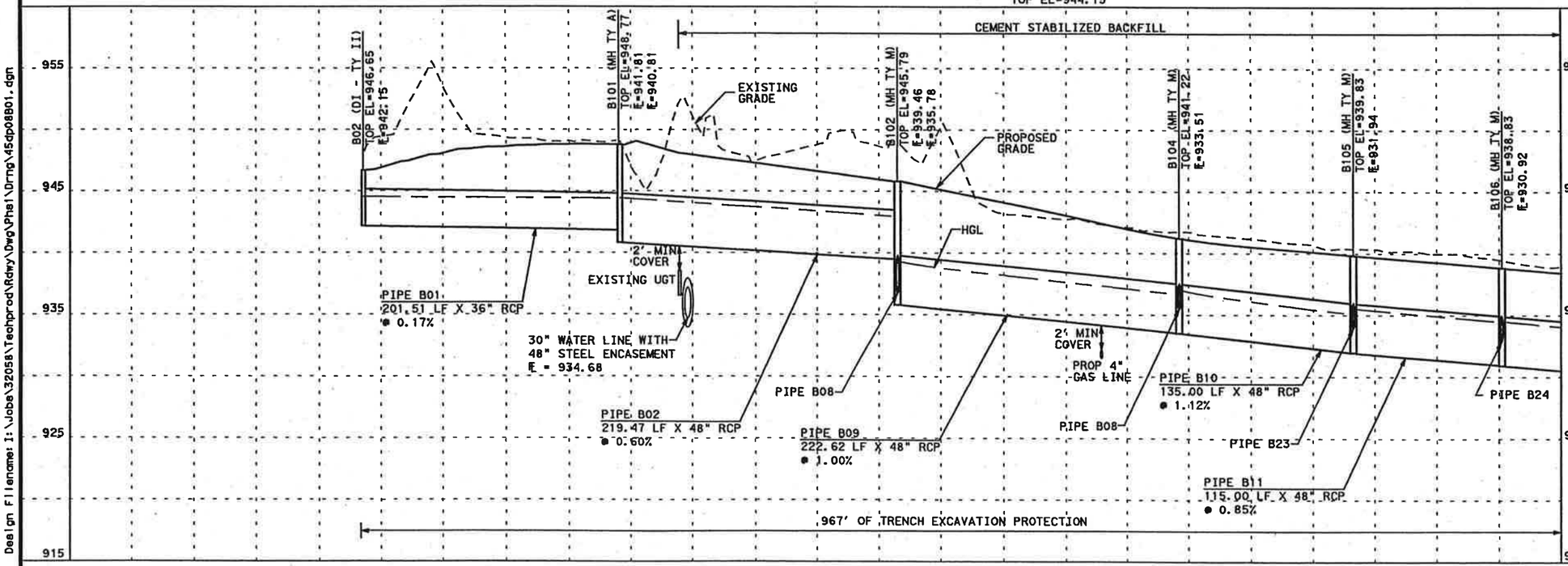

MATCH LINE STA 136+00 "J"

LEGEND

- CURB INLET TY IR & IIR
- CURB INLET TY I & II
- DROP INLET TY AAD
- DROP INLET TY AD
- DROP INLET TY II
- MANHOLE TY A
- MANHOLE TY M
- PIPE B01 — STORMSEWER PIPE
- EXISTING STORMSEWER

NOTES:

1. THE CONTRACTOR'S ATTENTION IS DIRECTED TO THE FACT THAT BOTH OVERHEAD AND UNDERGROUND UTILITIES ARE APPROXIMATE AND SHALL BE VERIFIED BY THE CONTRACTOR BEFORE BEGINNING CONSTRUCTION OPERATIONS.
2. INLETS AND MANHOLES SHOWN AT TWICE THEIR ACTUAL SIZE FOR CLARITY.
3. CURB INLET OFFSETS TO FACE OF CURB. DROP INLET AND MANHOLE OFFSETS TO CENTER OF STRUCTURE.
4. RIP RAP AROUND TYPE II DROP INLETS MAY NEED TO BE ADJUSTED TO FIT FIELD CONDITIONS.
5. REFER TO SUMMARY OF EXISITING DRAINAGE STRUCTURES FOR EXISTING STRUCTURES TO BE REMOVED.

STATE OF TEXAS
ANTHONY J. SCHNEIDER
71848
LICENSED
PROFESSIONAL ENGINEER

2/21/03

DRAINAGE PLAN PROFILE LINE B

SH45
STA 124+00 TO STA 136+00
SH 45 / US 183 INTERCHANGE

SCALE: H: 1"=100'
V: 1"=10'

HNTB ARCHITECTS ENGINEERS PLANNERS
The HNTB Companies

Texas Department of Transportation
© 2003 TEXAS TURNPIKE AUTHORITY DIVISION

DRAWING PREPARED BY:	HNTB CORPORATION			
SHEET 3 OF 9	45dp08B01.dgn			
FED. RD. DIV. NO.	FEDERAL AID PROJECT NO.			SHEET NO.
6	MG 2002 (243)			519
DSN: HKA	STATE	DIST.	COUNTY	
CHK: AJS	TEXAS	14	WILLIAMSON	
DRG: HKA	CONT.	SECT.	JOB	HIGHWAY NO.
CHK: AJS	0683	01	069	SH 45

Scale: 100.000000:1.000000
Plotted on: 20-FEB-2003 18:10

MATCH LINE STA 136+00 "J"

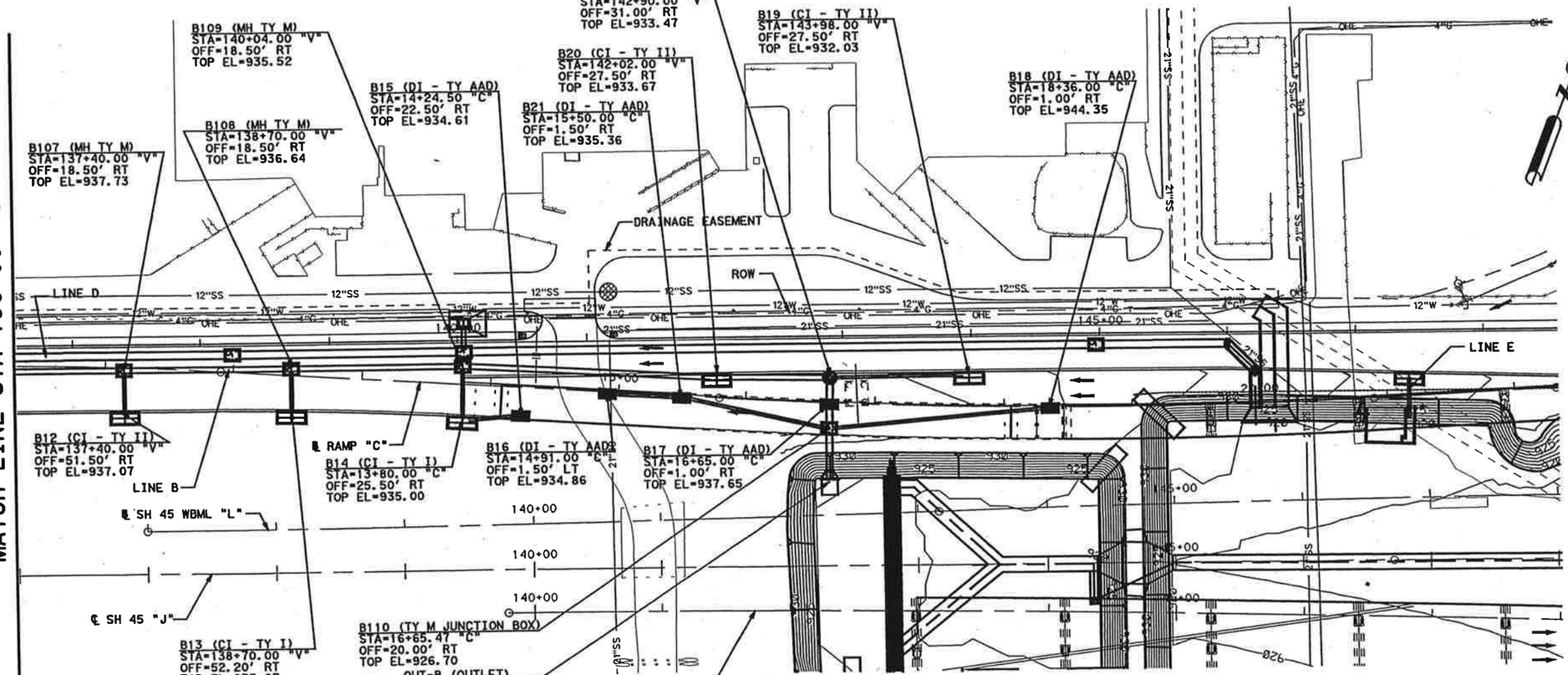

LEGEND

- CURB INLET TY IR & IIR
- CURB INLET TY I & II
- DROP INLET TY AAD
- DROP INLET TY AD
- DROP INLET TY II
- MANHOLE TY A
- MANHOLE TY M
- PIPE B01 — STORMSEWER PIPE
- EXISTING STORMSEWER

NOTES:

1. THE CONTRACTOR'S ATTENTION IS DIRECTED TO THE FACT THAT BOTH OVERHEAD AND UNDERGROUND UTILITIES ARE APPROXIMATE AND SHALL BE VERIFIED BY THE CONTRACTOR BEFORE BEGINNING CONSTRUCTION OPERATIONS.
2. INLETS AND MANHOLES SHOWN AT TWICE THEIR ACTUAL SIZE FOR CLARITY.
3. CURB INLET OFFSETS TO FACE OF CURB. DROP INLET AND MANHOLE OFFSETS TO CENTER OF STRUCTURE.
4. RIP RAP AROUND TYPE II DROP INLETS MAY NEED TO BE ADJUSTED TO FIT FIELD CONDITIONS.
5. REFER TO SUMMARY OF EXISITING DRAINAGE STRUCTURES FOR EXISTING STRUCTURES TO BE REMOVED.

STATE OF TEXAS
ANTHONY J. SCHNEIDER
71848
LICENSED
PROFESSIONAL ENGINEER

2/21/03

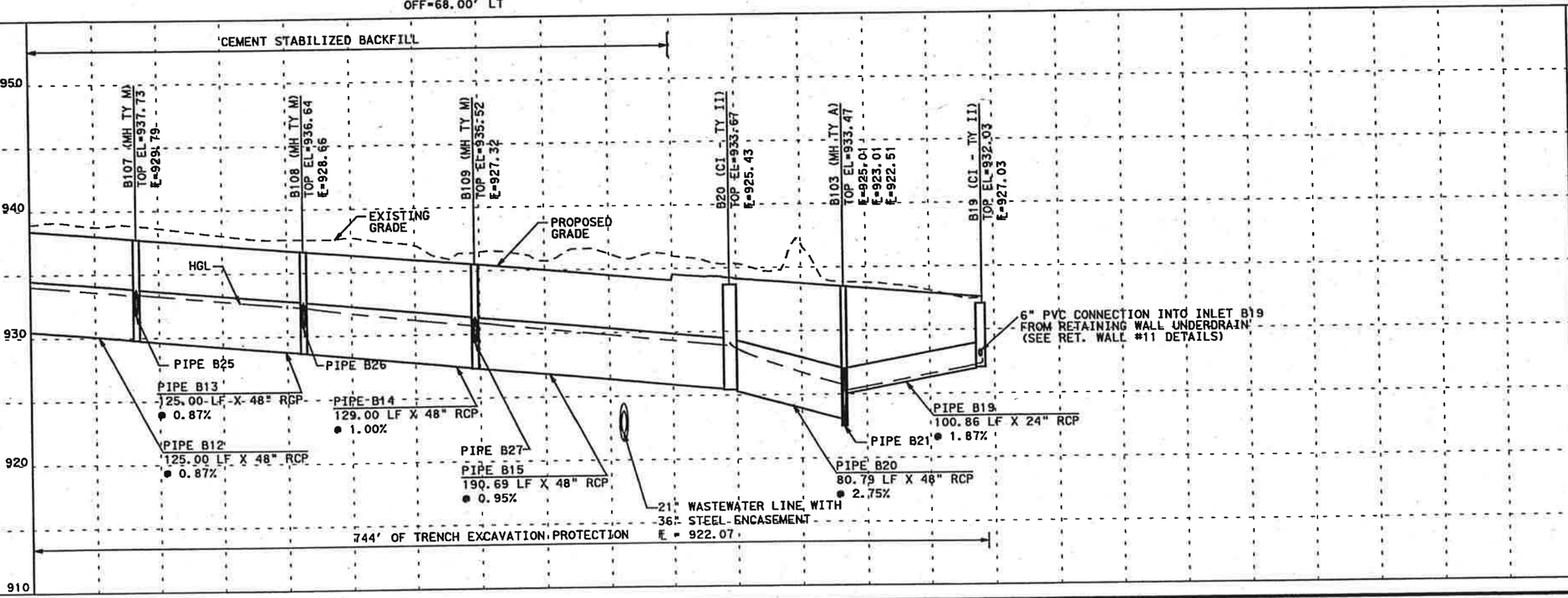

DRAINAGE PLAN PROFILE LINE B

SH45
STA 136+00 TO STA 148+00
SH 45 / US 183 INTERCHANGE

SCALE: H: 1"=100'
V: 1"=10'

HNTB ARCHITECTS ENGINEERS PLANNERS
The HNTB Companies

Texas Department of Transportation
© 2003 TEXAS TURNPIKE AUTHORITY DIVISION

DRAWING PREPARED BY: HNTB CORPORATION				
SHEET 4 OF 9			45dp08B02.dgn	
FED. RD. DIV. NO.	FEDERAL AID PROJECT NO.			SHEET NO.
6	MG 2002 (243)			520
DGN: HKA	STATE	DIST.	COUNTY	
CHK DGN: AJS	TEXAS	14	WILLIAMSON	
DWN: HKA	CONT.	SECT.	JOB	HIGHWAY NO.
CHK DWN: AJS	0683	01	069	SH 45

Pen Table is: \Jobs\32058\Techprod\rdwy\plots\32058drng.pen
Design Filename: I:\Jobs\32058\Techprod\Rdwy\Dwg\Phase1\Drng\45dp08B02.dgn

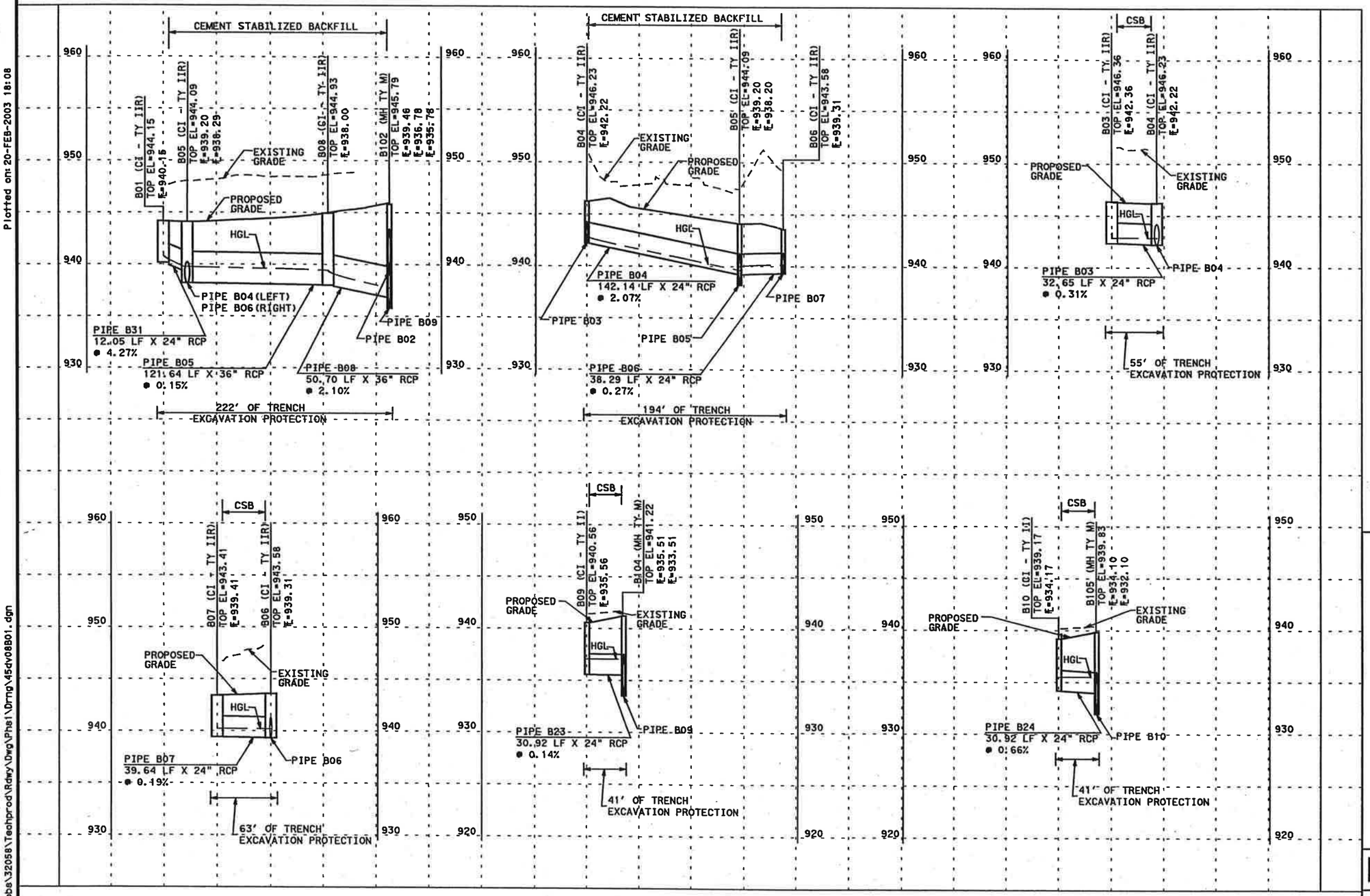

STATE OF TEXAS
ANTHONY J. SCHNEIDER
71848
LICENSED
PROFESSIONAL ENGINEER

2/21/03

LATERAL PROFILES LINE B

SH 45 / US 183 INTERCHANGE

SCALE: H=1":100'
V=1":10'

HNTB ARCHITECTS ENGINEERS PLANNERS
The HNTB Companies

Texas Department of Transportation

© 2003 TEXAS TURNPIKE AUTHORITY DIVISION

DRAWING PREPARED BY:	HNTB CORPORATION				
SHEET 5 of 9	45dv08B01.dgn				
FED. RD. DIV. NO.	FEDERAL AID PROJECT NO.				SHEET NO.
6	MG 2002 (243)				521
DGN: HKA	STATE	DIST.	COUNTY		
CHK DGN: AJS	TEXAS	14	WILLIAMSON		
DWG: HKA	CONT.	SECT.	JOB	HIGHWAY NO.	
CHK DWG: AJS	0683	01	069	SH 45	

Scale: 100.000000:1.000000
Plotted on: 20-FEB-2003 18:08
Pen Table: I:\...32058\techprod\rdwy\plots\32058dmng.pen
Design Filename: I:\Jobs\32058\Techprod\Rdwy\Dwg\Phs1\Dmg\45dv08B01.dgn

Scale: 100.000000:1.000000
Plotted on: 20-FEB-2003 18:08
Pen Table: I:\...32058\teahprod\rdwy\plots\32058drng.pen
Design Filename: I:\Jobs\32058\Teahprod\Rdwy\Dwg\Ph01\Drng\45dv08B02.dgn

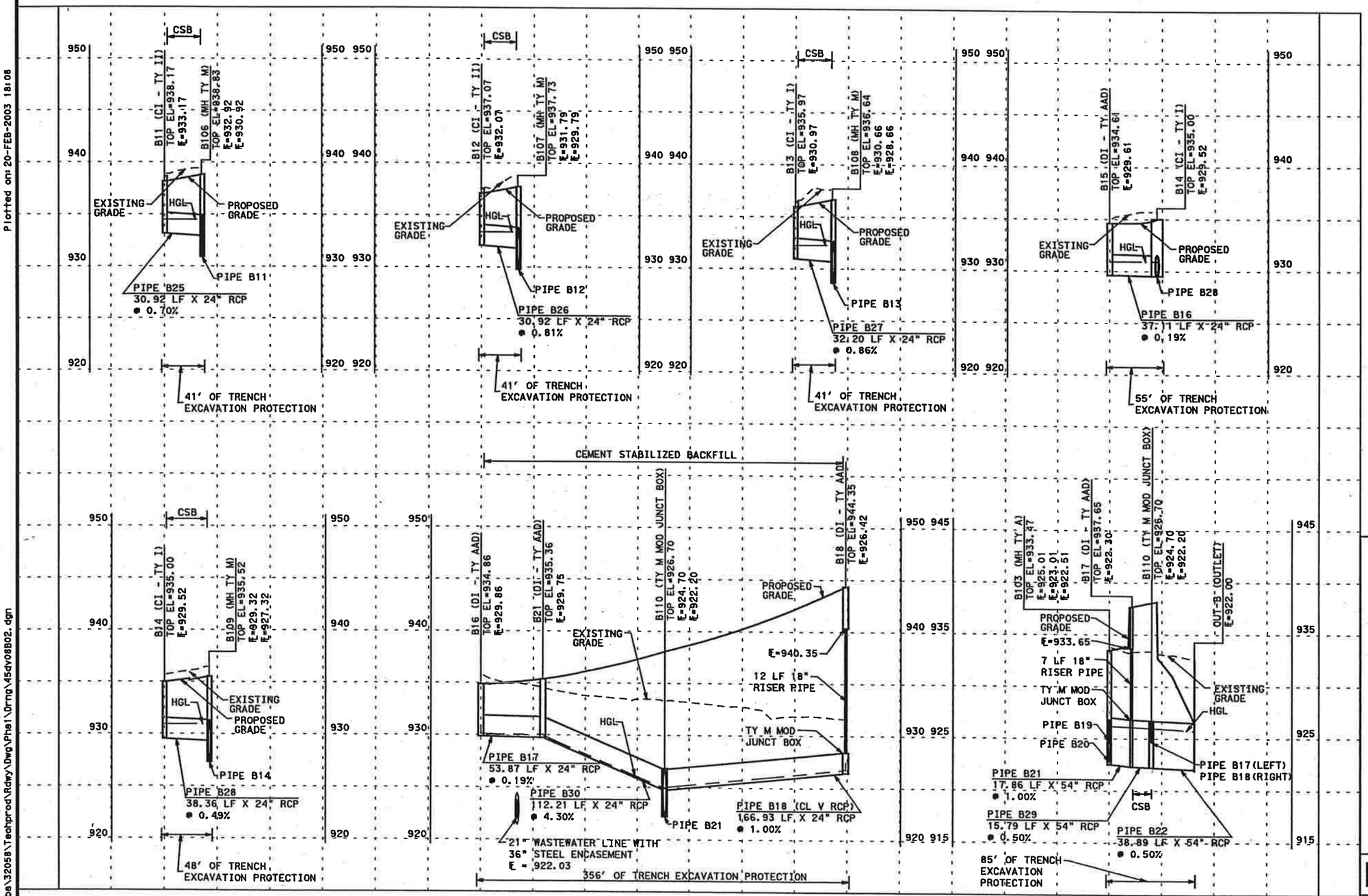

STATE OF TEXAS
ANTHONY J. SCHNEIDER
71848
LICENSED PROFESSIONAL ENGINEER

2/21/03

LATERAL PROFILES LINE B

SH 45 / US 183 INTERCHANGE

SCALE: H=1":100'
V=1":10'

HNTB ARCHITECTS ENGINEERS PLANNERS
The HNTB Companies

Texas Department of Transportation

© 2003 TEXAS TURNPIKE AUTHORITY DIVISION

DRAWING PREPARED BY:	HNTB CORPORATION			
SHEET 6 of 9	45dv08B01.dgn			
FED. RD. DIV. NO.	FEDERAL AID PROJECT NO.			SHEET NO.
6	MG 2002 (243)			522
DGN: HKA	STATE	DIST.	COUNTY	
CHK DGN: AJS	TEXAS	14	WILLIAMSON	
DWG: HKA	CONT.	SECT.	JOB	HIGHWAY NO.
CHK DWG: AJS	0683	01	069	SH 45

Scale: 100.000000:1.000000
Plotted on: 20-FEB-2003 18:10

INLET CONFIGURATION

Inlet ID	Library Item Name	Baseline	Inlet Station	Inlet Offset (ft)	Left or Right of Baseline	Inlet Elevation (ft)	Inlet Type	Profile Type	Composite X-section Spread Slope (%)	Curb Length (ft)	Curb Depression (ft)	Curb Height (ft)	Curb Depression Width (ft)	Slot Length (ft)	Slot Width (ft)	Grate Type	Grate Length (ft)	Grate Width (ft)	Grate Area (ft2)	Grate Perimeter (ft2)	Grate Area Reduction
B01	CI - TY IIR	XPCPK	15+59.60	53.50	Right	944.15	Curb	On Grade	2.00	10.000	0.333	0.521	1.500	n/a	n/a	n/a	n/a	n/a	n/a	n/a	n/a
B02	DI - TY II	FRE08	127+20.00	107.00	Left	946.65	Grate	Sag	12.50	n/a	n/a	n/a	n/a	n/a	n/a	Parallel 1 7/8 -	43.458	3.458	11.960	13.833	0.50
B03	CI - TY IIR	TAPPW	16+85.00	1.50	Left	946.36	Curb	On Grade	2.50	10.000	0.333	0.521	1.500	n/a	n/a	n/a	n/a	n/a	n/a	n/a	n/a
B04	CI - TY IIR	TAPPW	16+42.00	1.50	Left	946.23	Curb	Sag	1.50	10.000	0.333	0.521	1.500	n/a	n/a	n/a	n/a	n/a	n/a	n/a	n/a
B05	CI - TY IIR	XPCPK	15+82.00	53.50	Right	944.09	Curb	Sag	2.00	10.000	0.333	0.521	1.500	n/a	n/a	n/a	n/a	n/a	n/a	n/a	n/a
B06	CI - TY IIR	TAPPE	16+27.00	1.50	Right	943.58	Curb	On Grade	2.50	10.000	0.333	0.521	1.500	n/a	n/a	n/a	n/a	n/a	n/a	n/a	n/a
B07	CI - TY IIR	TAPPE	16+77.00	1.50	Right	943.41	Curb	Sag	2.50	10.000	0.333	0.521	1.500	n/a	n/a	n/a	n/a	n/a	n/a	n/a	n/a
B08	CI - TY IIR	XPCPK	17+14.00	53.50	Right	944.93	Curb	On Grade	2.00	10.000	0.333	0.521	1.500	n/a	n/a	n/a	n/a	n/a	n/a	n/a	n/a
B09	CI - TY II	FRW08	133+50.00	51.50	Right	940.56	Curb	On Grade	2.50	10.000	0.333	0.521	1.417	n/a	n/a	n/a	n/a	n/a	n/a	n/a	n/a
B10	CI - TY II	FRW08	134+90.00	51.50	Right	939.17	Curb	On Grade	2.50	10.000	0.333	0.521	1.417	n/a	n/a	n/a	n/a	n/a	n/a	n/a	n/a
B11	CI - TY II	FRW08	136+10.00	51.50	Right	938.17	Curb	On Grade	2.50	10.000	0.333	0.521	1.417	n/a	n/a	n/a	n/a	n/a	n/a	n/a	n/a
B12	CI - TY II	FRW08	137+40.00	51.50	Right	937.07	Curb	On Grade	2.50	10.000	0.333	0.521	1.417	n/a	n/a	n/a	n/a	n/a	n/a	n/a	n/a
B13	CI - TY I	FRW08	138+70.00	52.20	Right	935.97	Curb	On Grade	2.50	10.000	0.250	0.479	1.333	n/a	n/a	n/a	n/a	n/a	n/a	n/a	n/a
B14	CI - TY I	RW06	13+80.00	25.50	Right	935.01	Curb	On Grade	2.50	10.000	0.250	0.479	1.333	n/a	n/a	n/a	n/a	n/a	n/a	n/a	n/a
B15	DI - TY AAD	RW06	14+24.50	22.50	Right	934.61	Grate	Sag	1.00	n/a	n/a	n/a	n/a	n/a	n/a	Parallel 1 1/8	5.125	2.500	12.813	15.250	0.50
B16	DI - TY AAD	RW06	14+91.00	1.50	Right	934.86	Grate	On Grade	1.50	n/a	n/a	n/a	n/a	n/a	n/a	Parallel 1 1/8	5.125	2.500	12.813	15.250	0.50
B17	DI - TY AAD	RW06	16+65.00	1.00	Right	937.65	Grate	On Grade	2.00	n/a	n/a	n/a	n/a	n/a	n/a	Parallel 1 1/8	5.125	2.500	12.813	15.250	0.50
B18	DI - TY AAD	RW06	18+36.00	1.00	Right	944.35	Grate	On Grade	2.00	n/a	n/a	n/a	n/a	n/a	n/a	Parallel 1 1/8	5.125	2.500	12.813	15.250	0.50
B19	CI - TY II	FRW08	143+98.00	27.50	Right	932.03	Curb	On Grade	2.00	10.000	0.333	0.521	1.417	n/a	n/a	n/a	n/a	n/a	n/a	n/a	n/a
B20	CI - TY II	FRW08	142+02.00	27.50	Right	933.67	Curb	On Grade	2.00	10.000	0.333	0.521	1.417	n/a	n/a	n/a	n/a	n/a	n/a	n/a	n/a
B21	DI - TY AAD	RW06	15+50.00	1.50	Right	935.36	Grate	On Grade	1.50	n/a	n/a	n/a	n/a	n/a	n/a	Parallel 1 1/8	5.125	2.500	12.813	15.250	0.50

RUNOFF COMPUTATIONS

Area ID	Total Area (acre)	Composite C Value	Total CA	Tc Actual (min)	Tc Used (min)	Intensity (inch/hr) (10-YR)	Discharge (cfs) (10-YR)
B01	0.536	0.9	0.482	2.1	10	7.978	3.85
B02	3.184	0.8	2.388	2.3	10	7.978	19.05
B03	0.229	0.9	0.206	2.2	10	7.978	1.64
B04	0.242	0.9	0.218	1.7	10	7.978	1.74
B05	0.521	0.9	0.469	2.1	10	7.978	3.74
B06	0.346	0.9	0.311	3.3	10	7.978	2.48
B07	0.339	0.9	0.305	3	10	7.978	2.44
B08	0.456	0.9	0.410	1.7	10	7.978	3.27
B09	0.299	0.9	0.269	1.7	10	7.978	2.14
B10	0.185	0.9	0.167	1.5	10	7.978	1.33
B11	0.184	0.9	0.166	1.5	10	7.978	1.32
B12	0.18	0.9	0.162	1.5	10	7.978	1.29
B13	0.174	0.9	0.157	1.5	10	7.978	1.25
B14	0.218	0.9	0.196	1.5	10	7.978	1.57
B15	0.061	0.9	0.055	1.5	10	7.978	0.44
B16	0.036	0.9	0.032	1.5	10	7.978	0.26
B17	0.095	0.9	0.086	0.6	10	7.978	0.68
B18	0.138	0.9	0.124	1	10	7.978	0.99
B19	0.161	0.9	0.145	1.8	10	7.978	1.15
B20	0.215	0.9	0.194	1.8	10	7.978	1.54
B21	0.069	0.9	0.062	0.6	10	7.978	0.50

NOTE: GEOPAK DRAINAGE USED FOR STORM SEWER ANALYSIS.

STATE OF TEXAS
ANTHONY J. SCHNEIDER
71848
LICENSED
PROFESSIONAL ENGINEER

2/21/03

HYDRAULIC DATA SHEET
LINE B

SH 45 / US 183 INTERCHANGE

HNTB ARCHITECTS ENGINEERS PLANNERS
The HNTB Companies

Texas Department of Transportation
© 2003 TEXAS TURNPIKE AUTHORITY DIVISION

DRAWING PREPARED BY:	HNTB CORPORATION			
SHEET 7 of 9	45dy08B01.dgn			
FED. RD. DIV. NO.	FEDERAL AID PROJECT NO.			SHEET NO.
6	MG 2002 (243)			523
DSGN. HKA	STATE	DIST.	COUNTY	
CHK. DSGN. AJS	TEXAS	14	WILLIAMSON	
DWN. HKA	CONT.	SECT.	JOB	HIGHWAY NO.
CHK. DWG. AJS	0683	01	069	SH 45

Pen Tablet: V:\32058\teahprod\rdwy\plots\32058drng.pen
Design Filename: I:\Jobs\32058\Teahprod\Rdwy\Dwg\Phase1\Drng\45dy08B01.dgn

Scale: 40.000003:1.000000
Plotted on: 20-FEB-2003 19:18

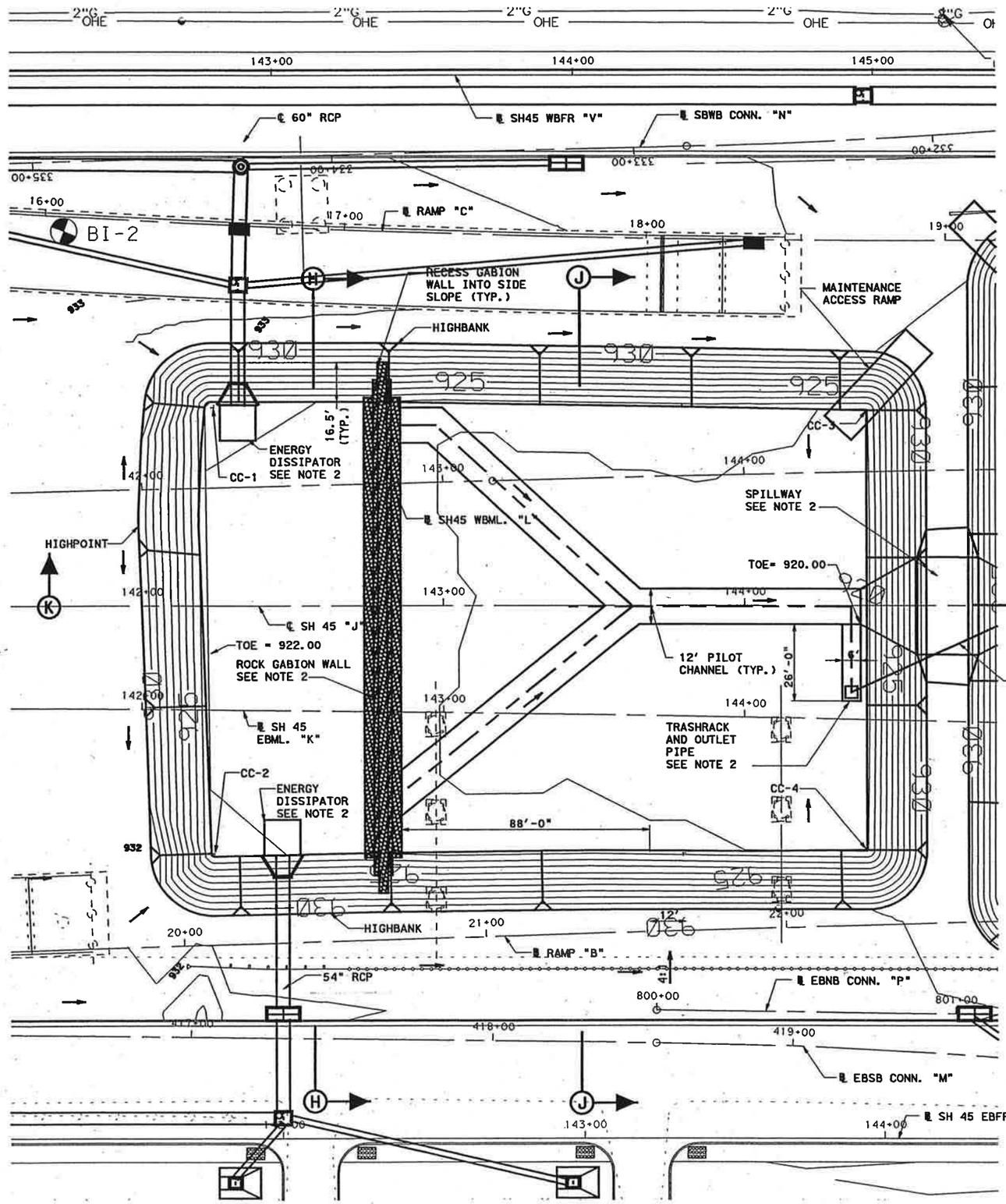

CALCULATIONS							
DRAINAGE AREA (ACRES)	EXISTING IMPERVIOUS COVER %	PROPOSED IMPERVIOUS COVER %	UNCAPTURED AREA (ACRES)	CAPTURED AREA (ACRES)	CAPTURED VOLUME (In.)	BASE VOLUME (Cu. Ft.)	PROVIDED VOLUME (Cu. Ft.)
55.70	42.8	86.5	0.00	55.70	1.38	271,528	325,834

CC-1
X= 3,094,792.2095
Y= 10,144,119.0867

CC-2
X= 3,094,846.6959
Y= 10,143,978.2012

CC-3
X= 3,094,994.9615
Y= 10,144,196.4276

CC-4
X= 3,095,048.7265
Y= 10,144,057.4076

NOTES:

1. FOR SECTIONS SEE SHEET "WATER QUALITY POND SECTIONS".

2. FOR DETAILS SEE "WATER QUALITY POND DETAILS" SHEETS.

STATE OF TEXAS
ANTHONY J. SCHNEIDER
71848
LICENSED
PROFESSIONAL ENGINEER

2/21/03

WATER QUALITY POND LAYOUT

LINE B AND LINE C POND

SH 45 / US 183 INTERCHANGE

SCALE:
1" = 40'

HNTB ARCHITECTS ENGINEERS PLANNERS
The HNTB Companies

Texas Department of Transportation
© 2003 TEXAS TURNPIKE AUTHORITY DIVISION

DRAWING PREPARED BY:			HNTB CORPORATION	
SHEET 1 OF 5			45d10805.dgn	
FED. RD. DIV. NO.	FEDERAL AID PROJECT NO.			SHEET NO.
6	MG 2002 (243)			659
DGN: XZ	STATE	DIST.	COUNTY	
CHK. DSN: AJS	TEXAS	14	WILLIAMSON	
DWN: TJG	CONT.	SECT.	JOB	HIGHWAY NO.
CHK. DFT: AJS	0683	01	069	SH 45

Pen Table: I:\...\32058\Techprod\Vrdwy\plots\32058drng.pen
Design Filename: I:\Jobs\32058\Techprod\Rdwy\Dwg\Phs1\Drng\45d10805.dgn

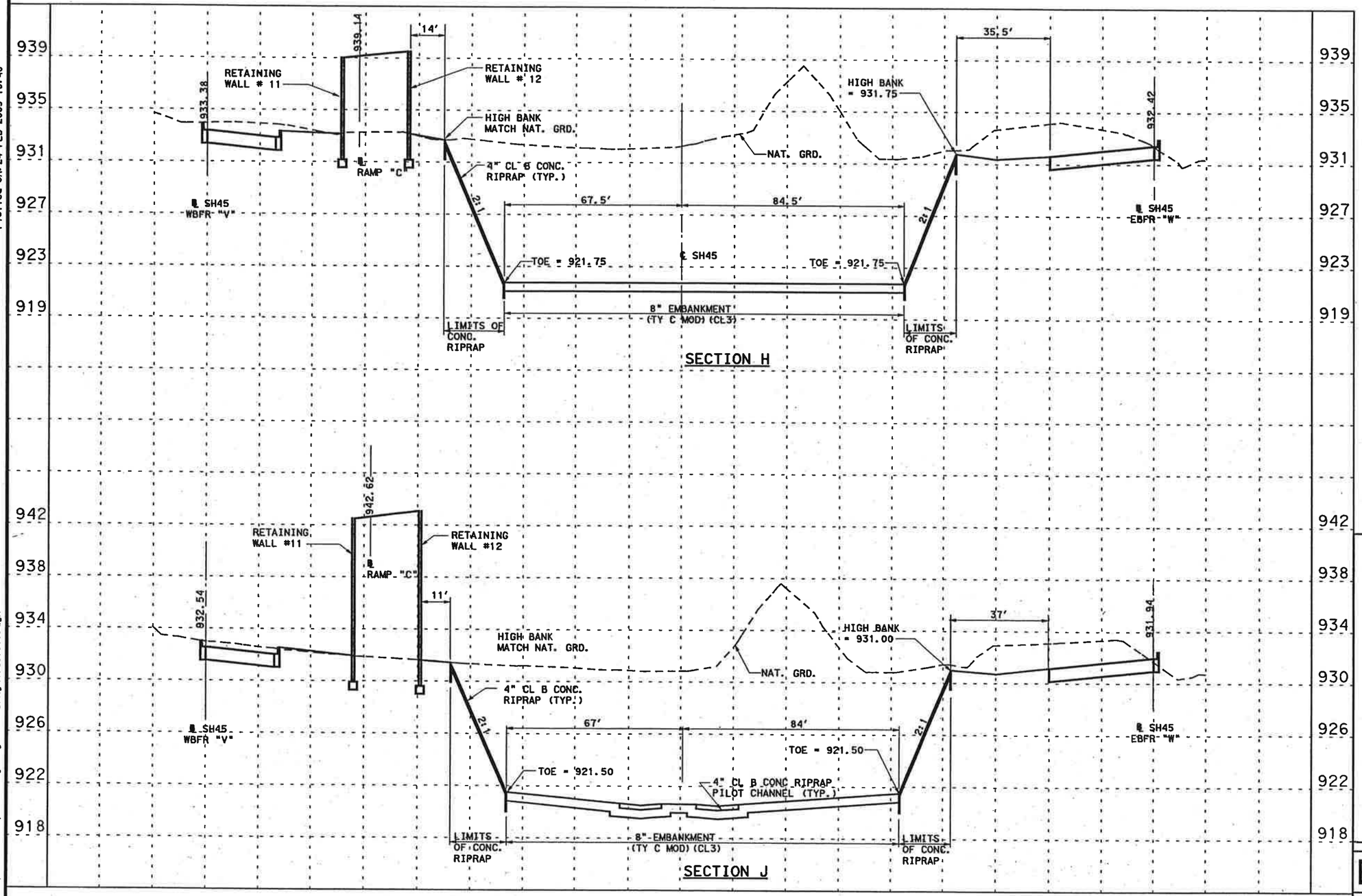

STATE OF TEXAS
ANTHONY J. SCHNEIDER
71848
LICENSED
PROFESSIONAL ENGINEER

2/24/03

WATER QUALITY POND SECTIONS

LINE B AND LINE C POND

SH 45 / US 183 INTERCHANGE

SCALE:
HORIZONTAL 1" = 40'
VERTICAL 1" = 8'

HNTB ARCHITECTS ENGINEERS PLANNERS
The HNTB Companies

Texas Department of Transportation
© 2003 TEXAS TURNPIKE AUTHORITY DIVISION

DRAWING PREPARED BY:	HNTB CORPORATION				
SHEET 2 OF 5	45de0805.dgn				
FED. RD. DIV. NO.	FEDERAL AID PROJECT NO.				SHEET NO.
6	MG 2002 (243)				660
DGN: MRH	STATE	DIST.	COUNTY		
CHK DGN: BCS	TEXAS	14	WILLIAMSON		
DWG: HFW	CONT.	SECT.	JOB	HIGHWAY NO.	
CHK DWG: JME	0683	01	069	SH 45	

Scale: 40.000003:1.000000
Plotted on: 24-FEB-2003 10:40

Pen Table: I:\...\32058\techprod\rdwy\plots\32058drng.pen
Design Filename: I:\Jobs\32058\Techprod\Rdwy\Dwg\Phsl\Drng\45de0805.dgn

Scale: 40.000003:1.000000
Plotted on: 24-FEB-2003 10:40

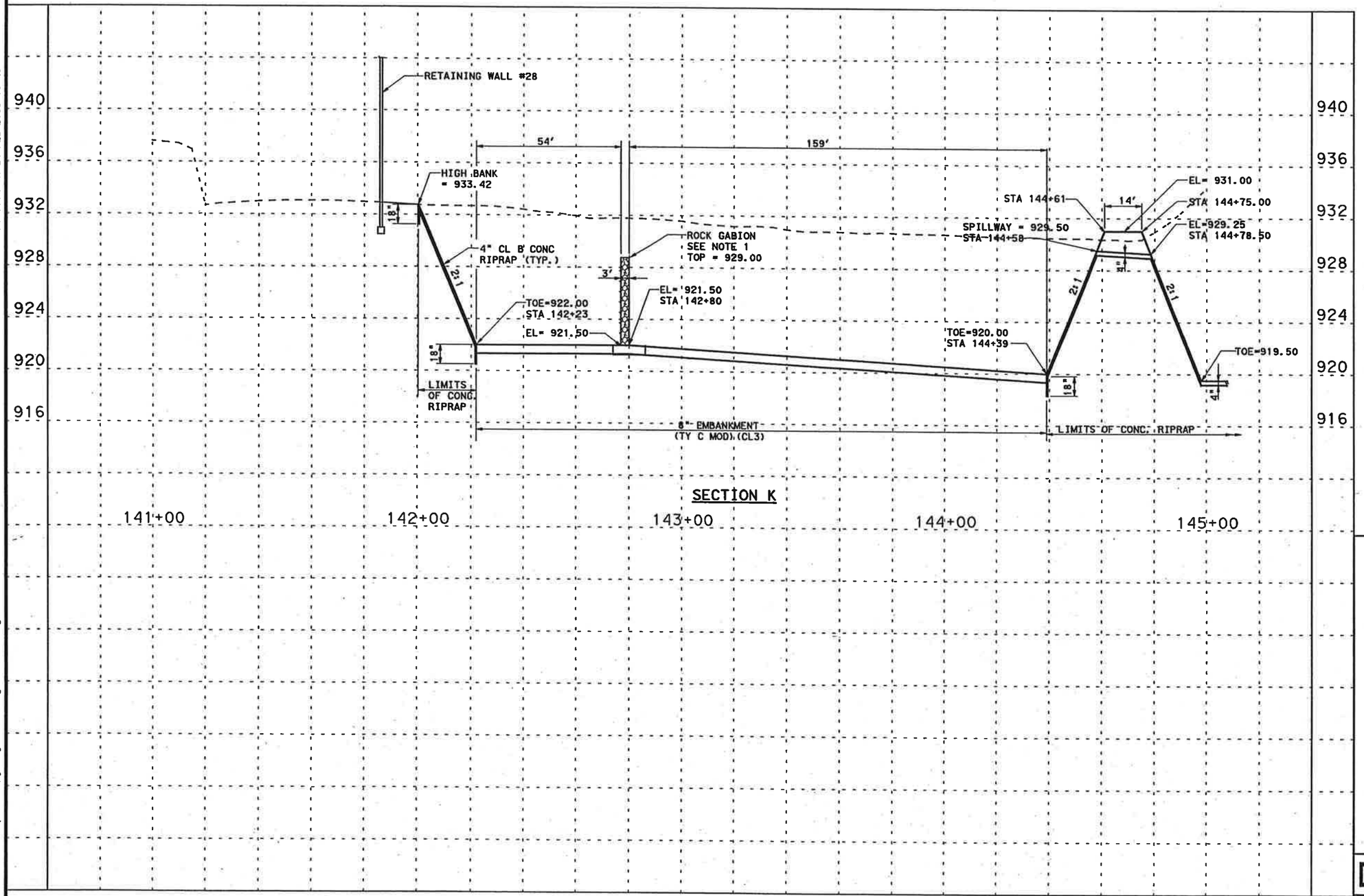

NOTES:
1. FOR DETAILS SEE WATER QUALITY POND DETAIL SHEETS.

STATE OF TEXAS
ANTHONY J. SCHNEIDER
71848
LICENSED
PROFESSIONAL ENGINEER

2/24/03

WATER QUALITY POND SECTIONS

LINE B AND LINE C POND

SH 45 / US 183 INTERCHANGE

SCALE:
HORIZONTAL 1" = 40'
VERTICAL 1" = 8'

HNTB ARCHITECTS ENGINEERS PLANNERS
The HNTB Companies

Texas Department of Transportation
© 2003 TEXAS TURNPIKE AUTHORITY DIVISION

DRAWING PREPARED BY: HNTB CORPORATION				
SHEET 3 OF 5			45da0806.dgn	
FED. RD. DIV. NO.	FEDERAL AID PROJECT NO.			SHEET NO.
6	MG 2002 (243)			661
DGN: MRH	STATE	DIST.	COUNTY	
CHK. DSN: BCS	TEXAS	14	WILLIAMSON	
DWG: HFW	CONT.	SECT.	JOB	HIGHWAY NO.
CHK. DWG: JME	0683	01	069	SH 45

Pen Table: I:\...\32058\tech\prod\rdwy\plots\32058drng.pen
Design Filename: I:\Jobs\32058\Tech\prod\Rdwy\Dwg\Phs1\Drng\45da0806.dgn

Scale: 20.000000:1.000000
Plotted on: 20-FEB-2003 19:19

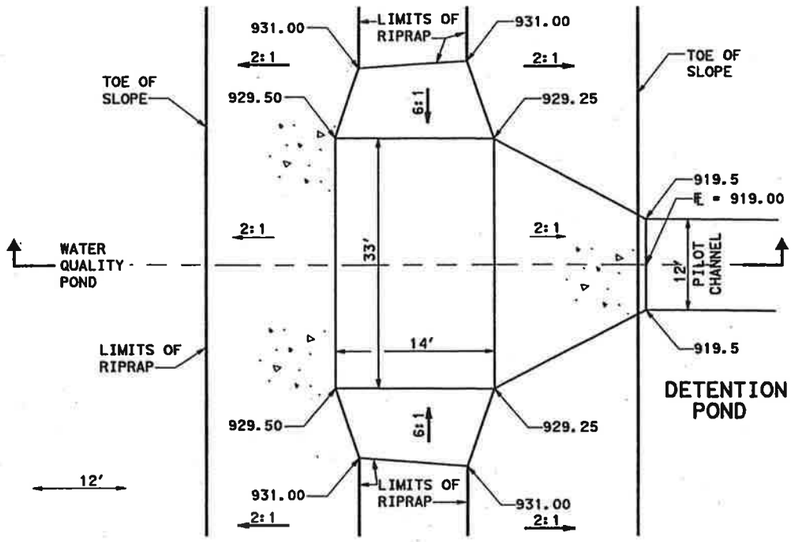

SPILLWAY DETAIL PLAN

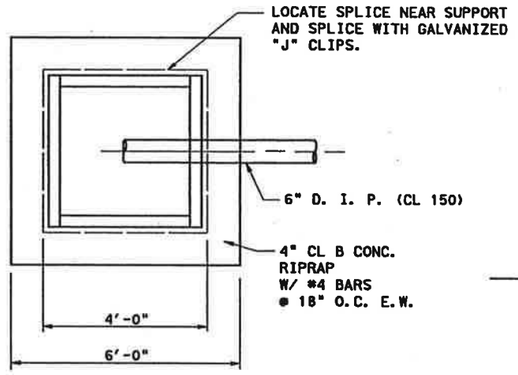

PLAN

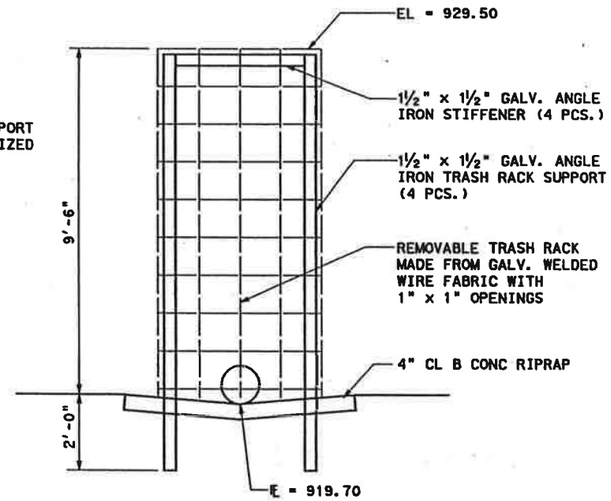

ELEVATION FACING EAST

TRASH RACK DETAIL
N.T.S.

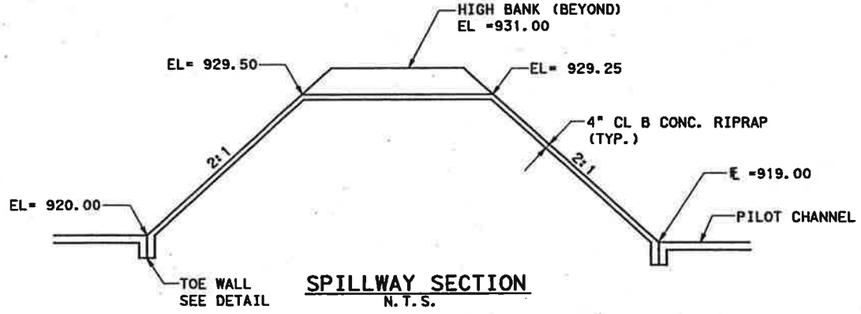

SPILLWAY SECTION
N.T.S.

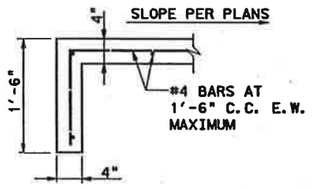

RIPRAP DETAIL
TOE WALL AT ALL EDGES
N.T.S.

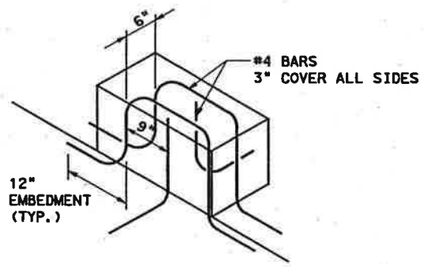

DISSPATOR BLOCK DETAIL
SHOWING REINFORCEMENT

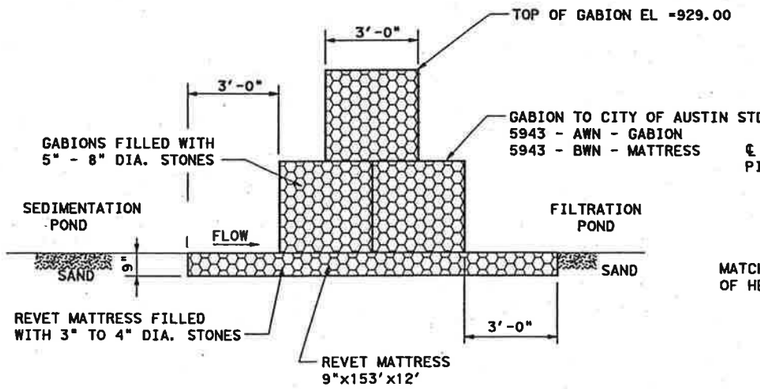

GABION DIVIDER WALL SECTION
LINE B AND LINE C POND ONLY
N.T.S.

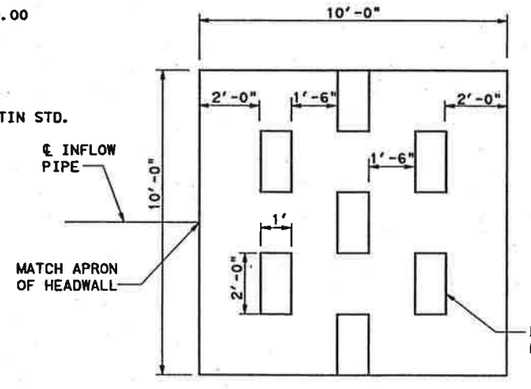

PLAN

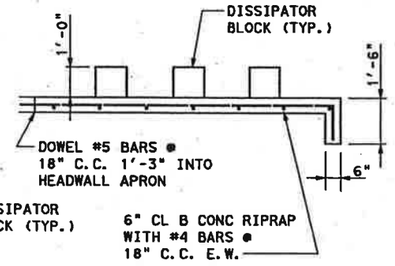

SECTION

ENERGY DISSIPATOR DETAILS
N.T.S.

ESTIMATED QUANTITY:
2.6 CY CONCRETE

STATE OF TEXAS
ANTHONY J. SCHNEIDER
71848
LICENSED PROFESSIONAL ENGINEER

2/21/03

WATER QUALITY POND DETAILS

LINE B AND LINE C POND

SH 45 / US 183 INTERCHANGE

SCALE:
AS SHOWN

HNTB ARCHITECTS ENGINEERS PLANNERS
The HNTB Companies

Texas Department of Transportation
© 2003 TEXAS TURNPIKE AUTHORITY DIVISION

DRAWING PREPARED BY:			HNTB CORPORATION	
SHEET 4 OF 5			45dd0801.dgn	
FED. RD. DIV. NO.	FEDERAL AID PROJECT NO.			SHEET NO.
6	MG 2002 (243)			662
DGN: MRH	STATE	DIST.	COUNTY	
CHK. DGN: BCS	TEXAS	14	WILLIAMSON	
DSN: HFW	CONT.	SECT.	JOB	HIGHWAY NO.
CHK. DSG: JME	0683	01	069	SH 45

Pen Tables: I:\Jobs\32058\Techprod\Rdwy\Plots\32058drng.pen
Design Filename: I:\Jobs\32058\Techprod\Rdwy\Dwg\Phal\Drng\45dd0801.dgn

Scale: 20.000000:1.000000
Plotted on: 20-FEB-2003 19:19

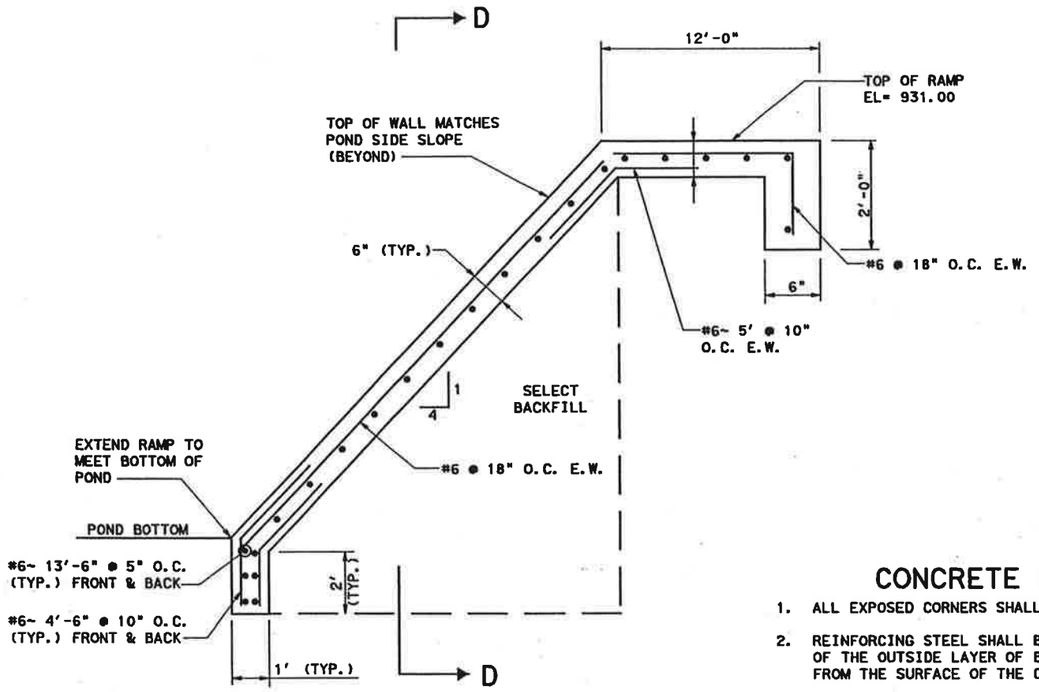

POND ACCESS RAMP DETAIL
LINE B AND LINE C WATER QUALITY POND ONLY

N.T.S.

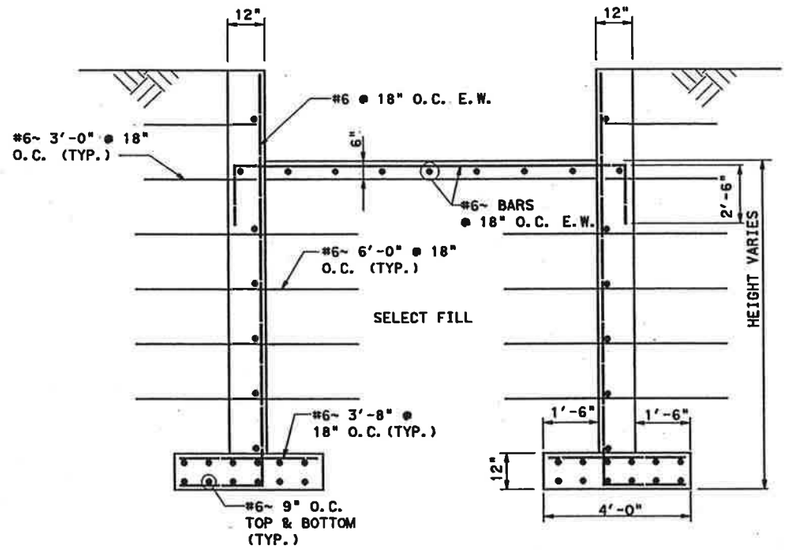

SECTION D-D

N.T.S.

CONCRETE NOTES

1. ALL EXPOSED CORNERS SHALL BE CHAMFERED ¾ INCHES.
2. REINFORCING STEEL SHALL BE PLACED WITH THE CENTER OF THE OUTSIDE LAYER OF BARS A MINIMUM OF 2 INCHES FROM THE SURFACE OF THE CONCRETE
3. ALL STEEL REINFORCING SHALL BE DEFORMED AND CONFORM TO GRADE 60 STANDARDS.
4. ALL CONCRETE SHALL HAVE A MINIMUM 28 DAY STRENGTH OF 3000 POUNDS PER SQUARE INCH.

STATE OF TEXAS
ANTHONY J. SCHNEIDER
71848
LICENSED
PROFESSIONAL ENGINEER

2/21/03

WATER QUALITY POND DETAILS

LINE B AND LINE C POND

SH 45 / US 183 INTERCHANGE

SCALE:
AS SHOWN

HNTB ARCHITECTS ENGINEERS PLANNERS
The HNTB Companies

Texas Department of Transportation
© 2003 TEXAS TURNPIKE AUTHORITY DIVISION

DRAWING PREPARED BY:	HNTB CORPORATION				
SHEET 5 OF 5	45dd0802.dgn				
FED. RD. DIV. NO.	FEDERAL AID PROJECT NO.				SHEET NO.
6	MG 2002 (243)				663
DGN: MRH	STATE	DIST.	COUNTY		
CHK. DGN: BCS	TEXAS	14	WILLIAMSON		
DRN: HFW	CONT.	SECT.	JOB	HIGHWAY NO.	
CHK. DES: JME	0683	01	069	SH 45	

Pen Table: I:\Jobs\32058\Techprod\Rdwy\plots\32058drng.pen
Design Filename: I:\Jobs\32058\Techprod\Rdwy\Dwg\Phs1\Drng\45dd0802.dgn

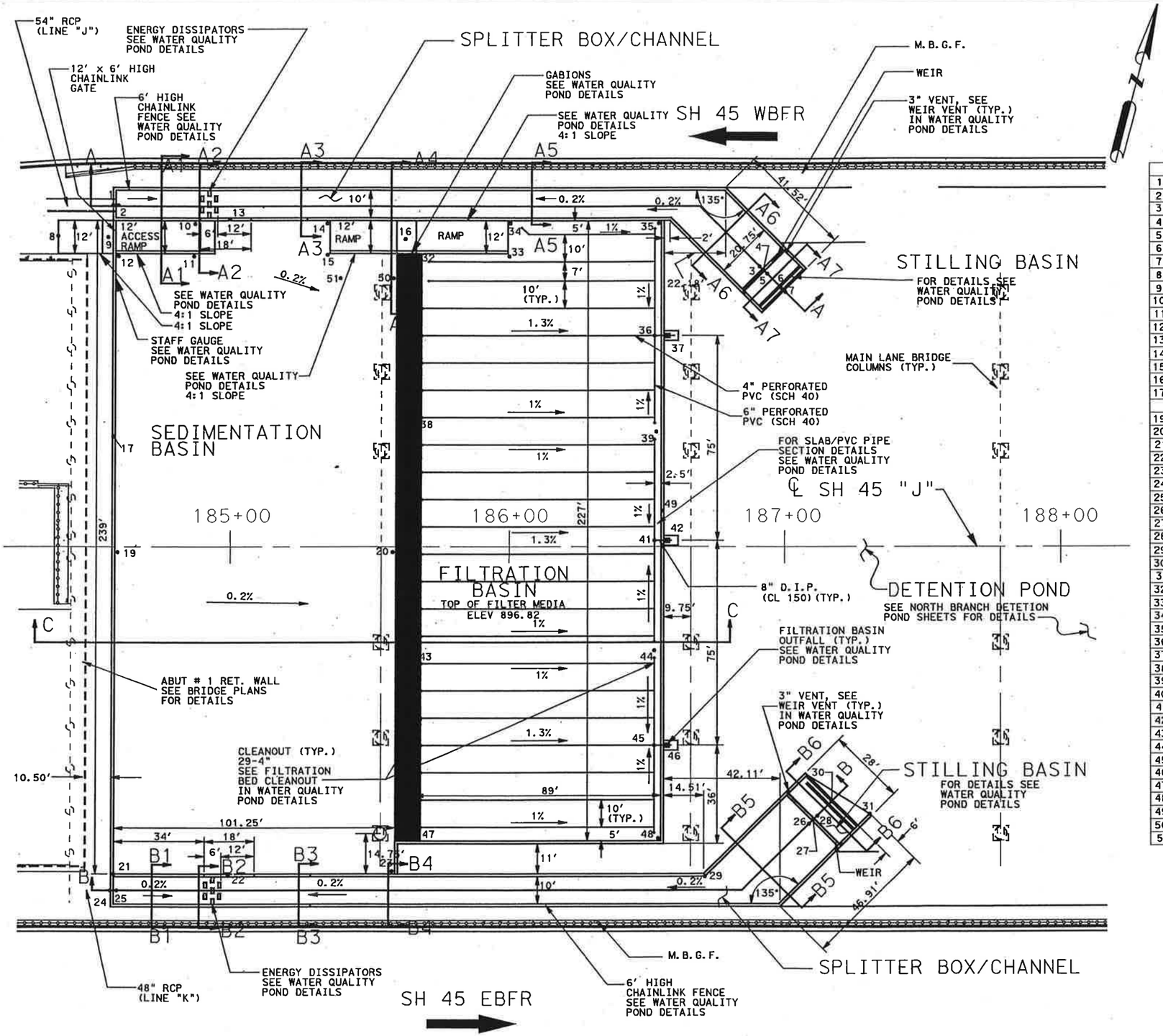

WATER QUALITY POND
DESIGN WATER ELEVATION = 901.38

NOTES:

1. WATER QUALITY POND FULL WATER LEVEL ELEVATION: 901.32'
2. WATER QUALITY POND 20% SEDIMENTATION ELEVATION: 897.72'
3. SEE WATER QUALITY POND DETAILS FOR POND AND CONCRETE DETAILS.

	ELEV.	STATION	OFFSET
1	900.00	184+56.94	124.74 LT
2	897.03	184+58.96	124.73 LT
3	897.35	186+91.49	102.10 LT
4	901.38	186+92.28	101.34 LT
5	895.10	186+92.92	100.63 LT
6	895.00	186+98.84	94.85 LT
7	894.98	187+00.00	93.39 LT
8	902.00	184+36.95	113.64 LT
9	906.00	184+55.33	113.56 LT
10	896.98	184+86.93	118.24 LT
11	896.98	184+86.63	106.29 LT
12	897.03	184+59.08	106.31 LT
13	896.96	184+97.54	119.72 LT
14	896.89	185+34.34	118.21 LT
15	896.87	185+34.35	106.78 LT
16	902.82	185+62.54	112.62 LT
17	906.00	184+57.47	40.41 LT
19	897.12	184+59.09	1.93 RT
20	896.82	185+58.21	1.93 RT
21	897.32	184+59.00	118.65 RT
22	897.30	184+99.55	120.31 RT
23	896.82	185+58.21	118.66 RT
24	900.00	184+56.74	125.70 RT
25	897.38	184+59.13	125.76 RT
26	897.73	187+09.40	100.75 RT
27	901.38	187+10.30	100.05 RT
28	895.10	187+11.00	99.38 RT
29	906.00	186+71.36	121.17 RT
30	895.00	187+16.85	93.50 RT
31	895.00	187+30.42	97.81 RT
32	894.82	185+67.25	105.93 LT
33	894.41	185+99.77	106.27 LT
34	894.51	186+00.21	118.24 LT
35	893.97	186+54.24	118.29 LT
36	893.55	186+52.76	77.25 LT
37	893.50	186+57.76	77.25 LT
38	894.82	185+67.10	42.26 LT
39	893.93	186+53.45	42.13 LT
40	906.00	185+65.88	17.99 LT
41	893.55	186+52.75	2.25 LT
42	893.50	186+57.75	2.25 LT
43	894.82	185+67.06	37.78 RT
44	893.93	186+52.78	37.94 RT
45	893.55	186+52.76	72.75 RT
46	893.50	186+57.76	72.75 RT
47	894.82	185+67.45	106.70 RT
48	893.93	186+54.26	106.72 RT
49	906.00	186+55.83	13.12 LT
50	896.82	185+58.21	98.30 LT
51	896.86	185+39.82	98.33 LT

STATE OF TEXAS
ANTHONY J. SCHNEIDER
71848
LICENSED
PROFESSIONAL ENGINEER
4/16/03

NORTH BRANCH
WATER QUALITY POND WEST
PLAN

STA 184+65 TO STA 187+70

SH 45 / US 183 INTERCHANGE

SCALE: PLAN 1": 40'

HNTB ARCHITECTS ENGINEERS PLANNERS
The HNTB Companies

Texas Department of Transportation
© 2003 TEXAS TURNPIKE AUTHORITY DIVISION

DRAWING PREPARED BY:			HNTB CORPORATION		
SHEET 1 OF 14			45WQPL01.DGN		
FED. RD. DIV. NO.	FEDERAL AID PROJECT NO.			SHEET NO.	
6				664	
DGN: AJS	STATE	DIST.	COUNTY		
CHK DGN: AJS	TEXAS	14	WILLIAMSON		
DRG: KZK	CONT.	SECT.	JOB	HIGHWAY NO.	
CHK DRG: CAD	0683	01	069	SH 45	

Scale: 40.000000:1.000000
Plotted on: 16-APR-2003 15:21
Pen Tables: I:\Jobs\32058\Teahprod\Rdwy\plots\32058drng.pen
Design Filename: I:\Jobs\32058\Teahprod\Rdwy\Dwg\Phs1\Drng\45wqp101.dgn

Scale: 10.000000:1.000000
Plotted on: 24-FEB-2003 10:41

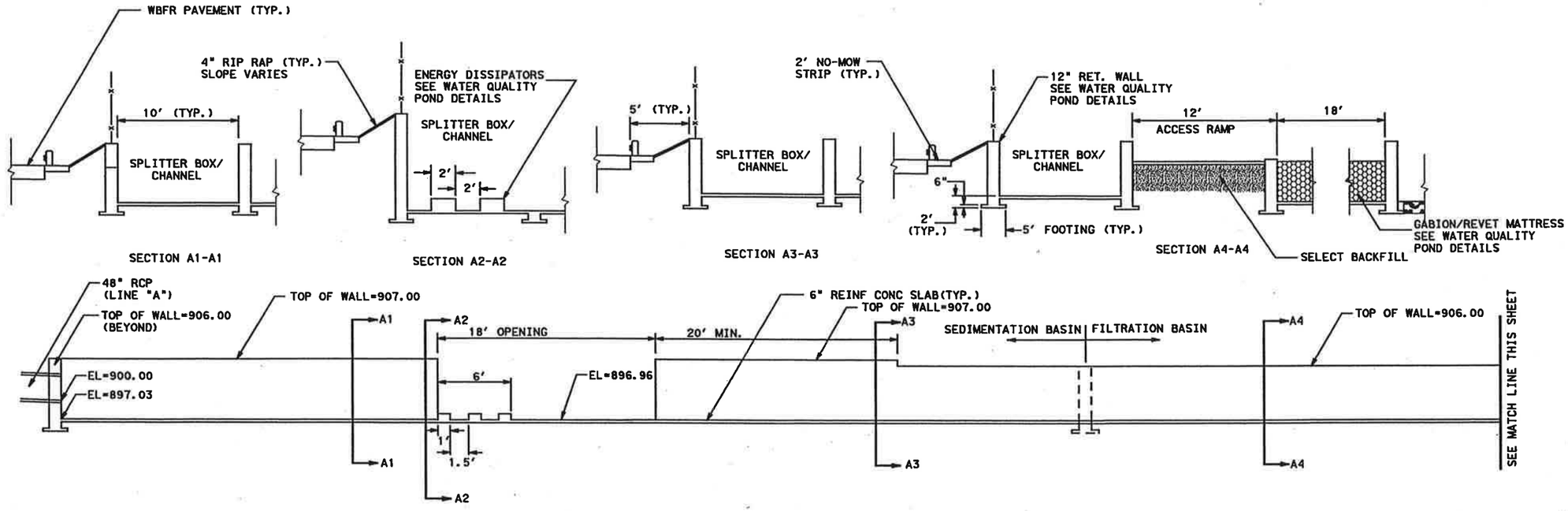

SECTION A-A

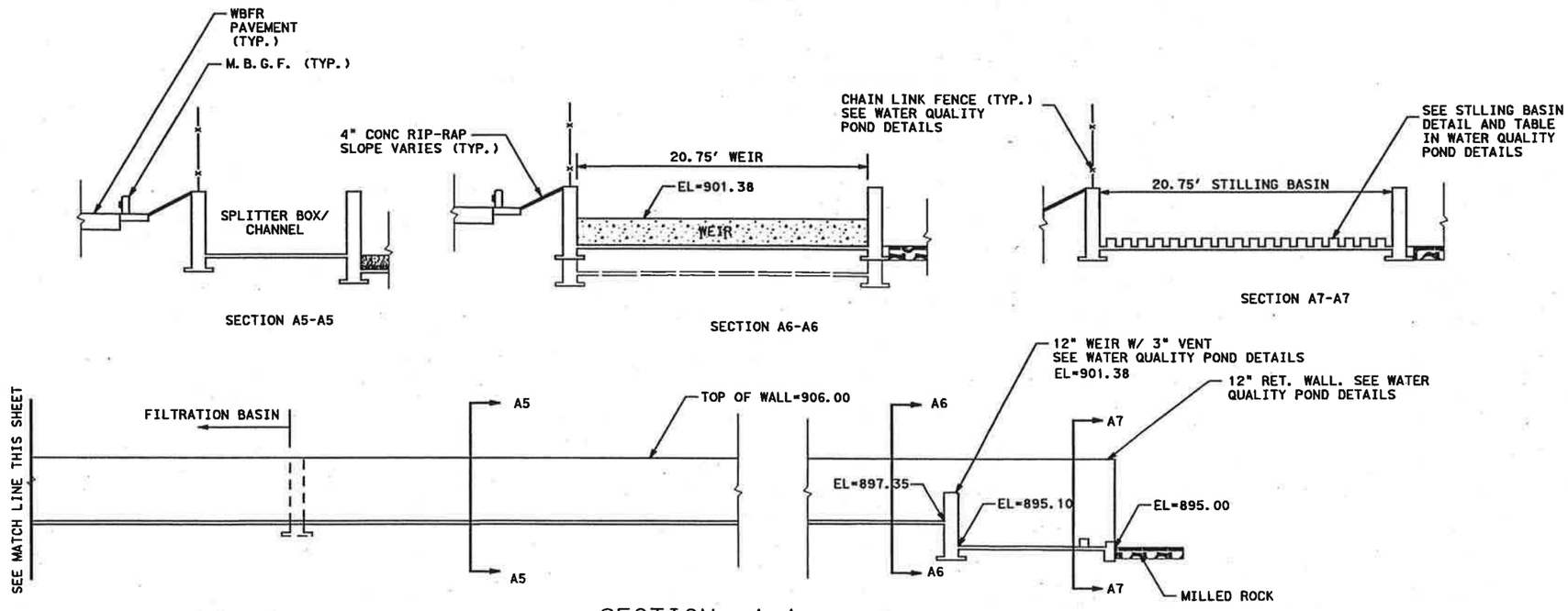

SECTION A-A

Pen Table: I:\Jo...\32058\Techprod\Rdwy\plote\32058drng.pen
Design Filename: I:\Jobs\32058\Techprod\Rdwy\Dwg\Phs1\Drng\45wqts01.dgn

STATE OF TEXAS
ANTHONY J. SCHNEIDER
71848
LICENSED
PROFESSIONAL ENGINEER

2/24/03

NORTH BRANCH WATER QUALITY POND WEST

SECTION A - A

SH 45 / US 183 INTERCHANGE

SCALE: PLAN 1" = 10'
PROFILE 1" = 20'

HNTB ARCHITECTS ENGINEERS PLANNERS
The HNTB Companies

Texas Department of Transportation
© 2003 TEXAS TURNPIKE AUTHORITY DIVISION

DRAWING PREPARED BY:	HNTB CORPORATION			
SHEET 2 OF 14	45WQTS01.DGN			
FED. RD. DIV. NO.	FEDERAL AID PROJECT NO.			SHEET NO.
6				665
DSGN: AJS	STATE	DIST.	COUNTY	
CHK. DSGN: MGM	TEXAS	14	WILLIAMSON	
DWN: KZK	CONT.	SECT.	JOB	HIGHWAY NO.
CHK. DWG: CAD	0683	01	069	SH 45

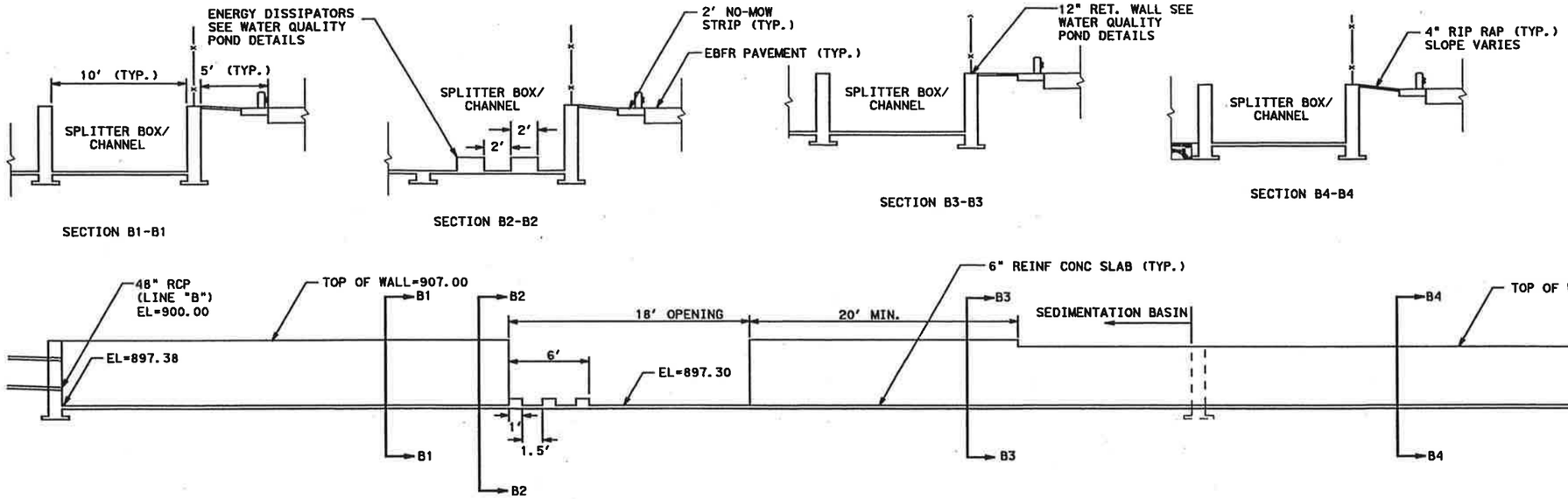

SECTION B-B

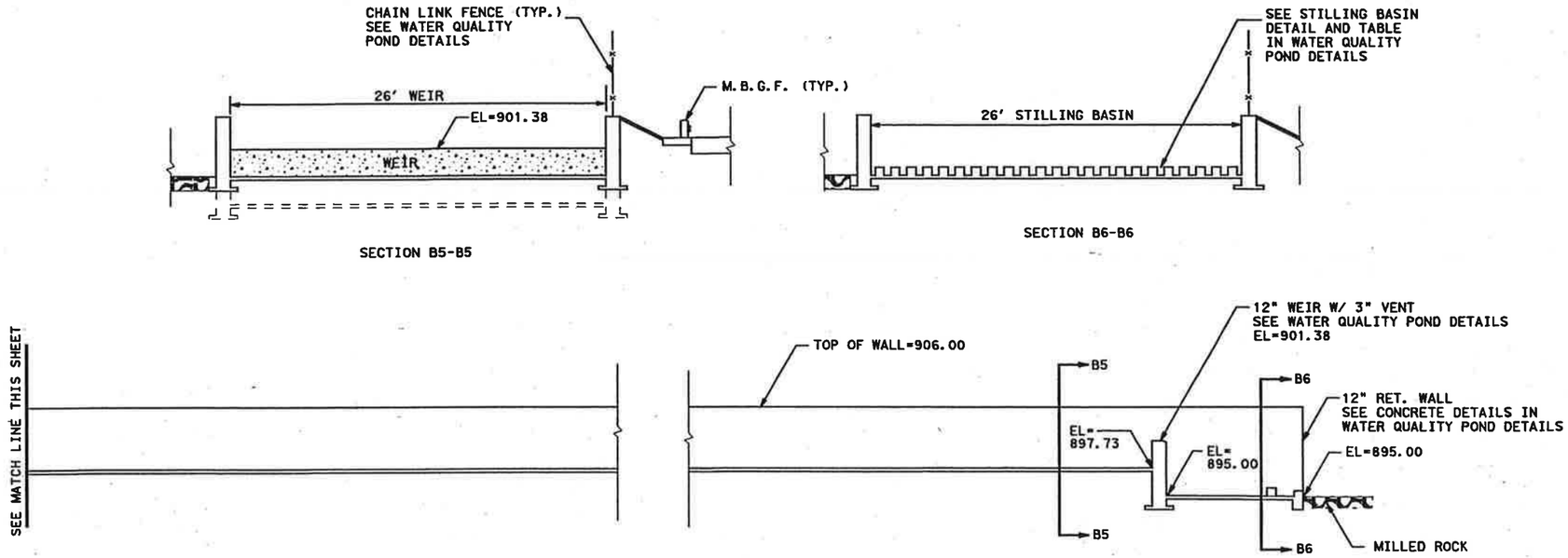

SECTION B-B

STATE OF TEXAS
ANTHONY J. SCHNEIDER
71848
LICENSED
PROFESSIONAL ENGINEER

2/24/03

NORTH BRANCH
WATER QUALITY POND WEST

SECTION B - B

SH 45 / US 183 INTERCHANGE

SCALE: PLAN 1" = 10'
PROFILE 1" = 20'

HNTB ARCHITECTS ENGINEERS PLANNERS
The HNTB Companies

Texas Department of Transportation
© 2003 TEXAS TURNPIKE AUTHORITY DIVISION

DRAWING PREPARED BY:			HNTB CORPORATION		
SHEET 3 OF 14			45WQTS02.DGN		
FED. RD. DIV. NO.	FEDERAL AID PROJECT NO.				SHEET NO.
6					666
DGN: AJS	STATE	DIST.	COUNTY		
CHK DGN: MGM	TEXAS	14	WILLIAMSON		
DWG: KZK	CONT.	SECT.	JOB	HIGHWAY NO.	
CHK DWG: CAD	0683	01	069	SH 45	

Scale: 10.000000:1.000000
Plotted on: 24-FEB-2003 10:41

Pen Table: I:\Jobs\32058\techprod\rdwy\plots\32058drng.pen
Design Filename: I:\Jobs\32058\Techprod\Rdwy\Dwg\Phs1\Drng\45wqts02.dgn

Scale: 10.000000:1.000000
Plotted on: 24-FEB-2003 10:41

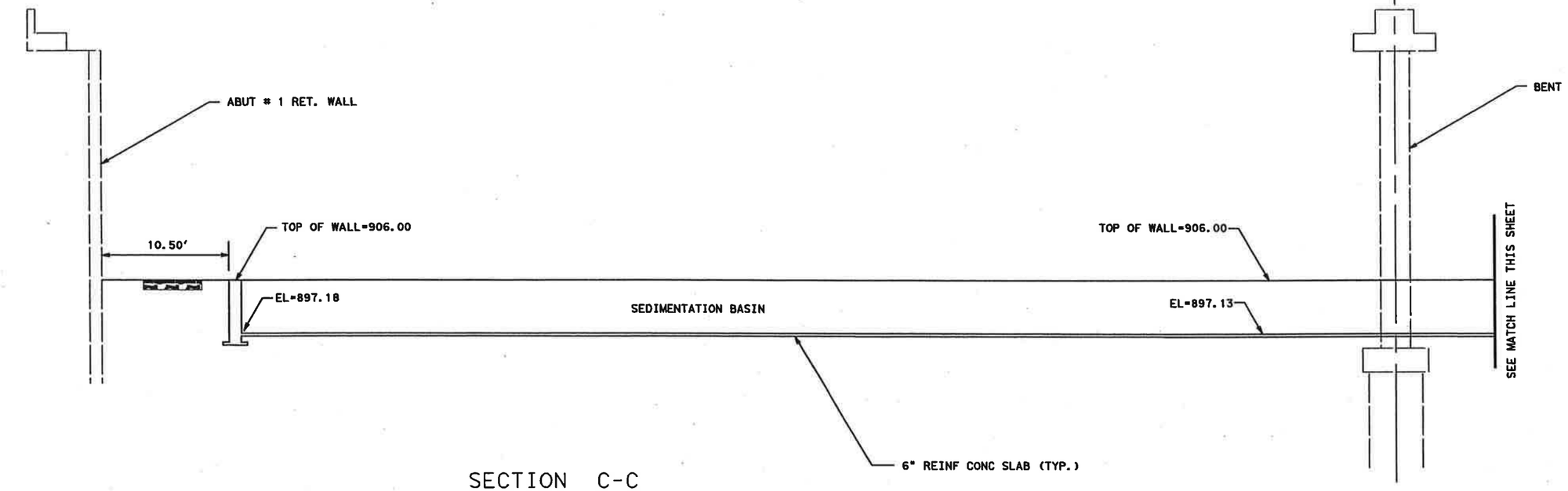

SECTION C-C

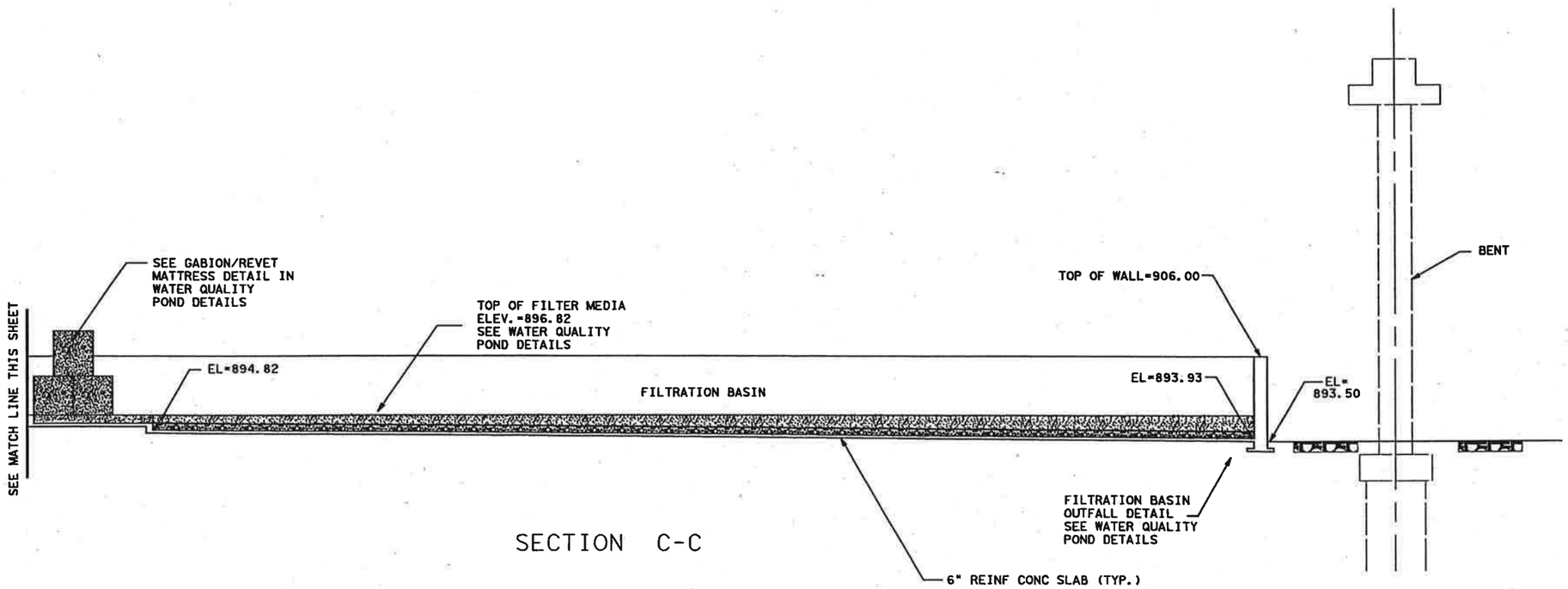

SECTION C-C

STATE OF TEXAS
ANTHONY J. SCHNEIDER
71848
LICENSED PROFESSIONAL ENGINEER

2/24/03

NORTH BRANCH
WATER QUALITY POND WEST
SECTION C - C

SH 45 / US 183 INTERCHANGE

SCALE: PLAN 1" = 10'
PROFILE 1" = 20'

HNTB ARCHITECTS ENGINEERS PLANNERS
The HNTB Companies

Texas Department of Transportation
© 2003 TEXAS TURNPIKE AUTHORITY DIVISION

DRAWING PREPARED BY:	HNTB CORPORATION			
SHEET 4 OF 14	45WQTS03.DGN			
FED. RD. DIV. NO.	FEDERAL AID PROJECT NO.			SHEET NO.
6				667
DSN. AJS	STATE	DIST.	COUNTY	
CHK. DSN. MGM	TEXAS	14	WILLIAMSON	
DRN. KZK	CONT.	SECT.	JOB	HIGHWAY NO.
CHK. DRG. CAD	0683	01	069	SH 45

Pen Tables: I:\Jobs\32058\Techprod\Rdwy\Plots\32058drng.pen
Design Filename: I:\Jobs\32058\Techprod\Rdwy\Dwg\Phs1\Drng\45wqts03.dgn

Scale: 40.000000:1.000000
Plotted on: 24-FEB-2003 13:36

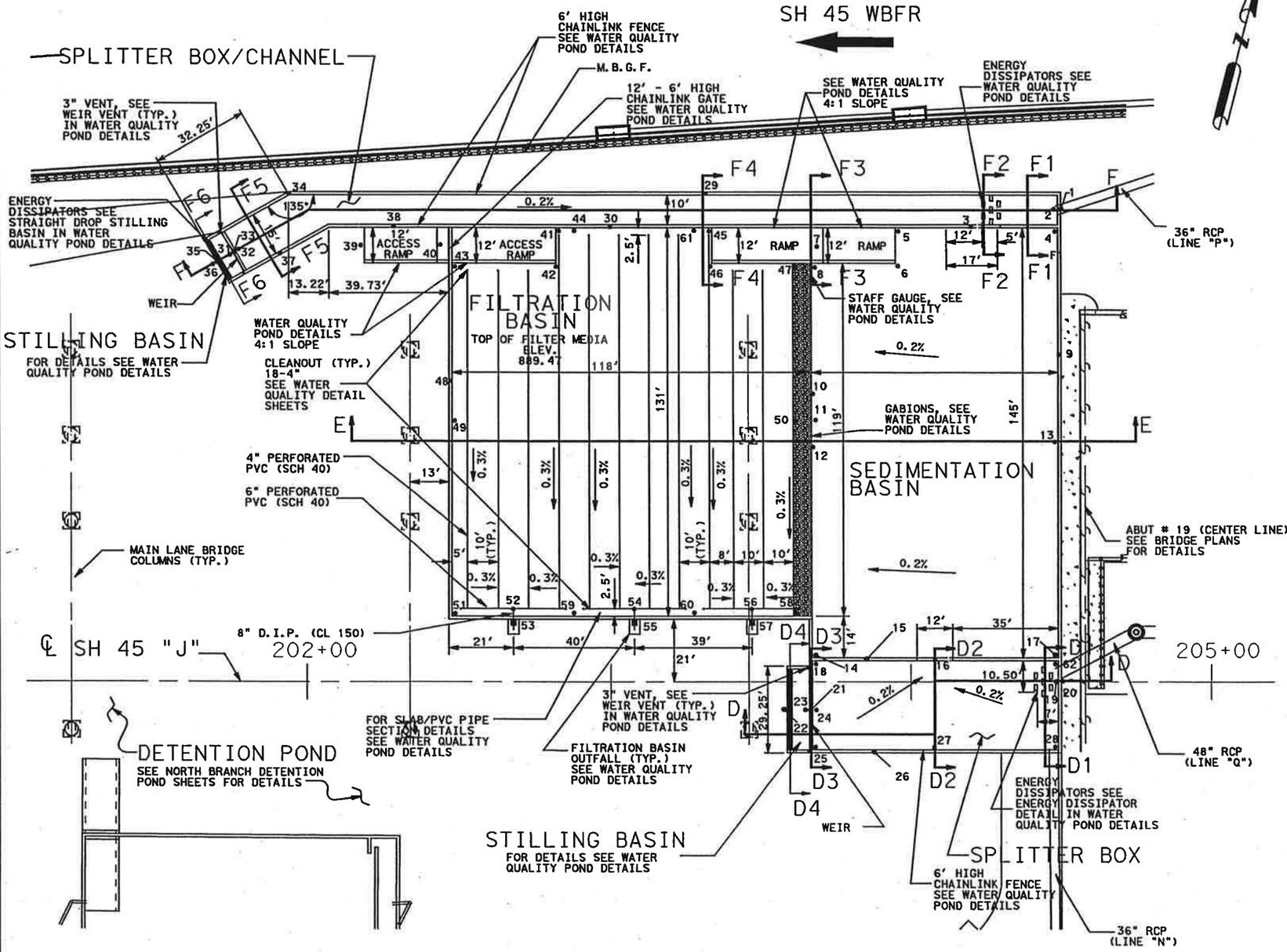

WATER QUALITY POND
DESIGN WATER ELEVATION = 892.34

	ELEV.	STATION	OFFSET
1	890.20	204+50.20	159.52 LT
2	889.88	204+47.65	159.39 LT
3	889.83	204+21.28	153.34 LT
4	889.87	204+48.03	151.95 LT
5	889.79	203+96.02	151.95 LT
6	889.77	203+95.94	140.19 LT
7	896.00	203+68.89	146.76 LT
8	889.68	203+68.17	139.74 LT
9	896.00	204+49.40	110.27 LT
10	889.68	203+68.64	98.77 LT
11	889.68	203+68.29	88.11 LT
12	889.68	203+68.45	77.32 LT
13	889.82	204+47.85	80.78 LT
14	889.68	203+68.16	9.01 LT
15	896.00	203+85.03	7.71 LT
16	889.84	204+07.67	7.39 LT
17	889.92	204+47.92	9.15 LT
18	889.92	203+68.15	5.97 LT
19	889.92	204+48.15	0.37 LT
20	889.99	204+50.34	0.37 LT
21	892.34	203+66.48	9.35 RT
22	887.10	203+58.74	9.35 RT
23	887.20	203+65.99	9.35 RT
24	889.93	203+68.45	9.35 RT
25	889.94	203+68.01	21.96 RT
26	896.00	203+87.52	23.60 RT
27	889.90	204+07.82	21.98 RT
28	889.94	204+47.92	21.86 RT
29	896.00	203+31.90	164.28 LT
30	896.00	202+95.85	153.53 LT
31	889.10	201+77.28	144.38 LT
32	890.32	201+78.78	145.35 LT
33	892.34	201+77.89	144.75 LT
34	896.00	201+64.41	164.47 LT
35	889.00	201+72.36	141.40 LT
36	889.00	201+71.54	141.30 LT
37	896.00	201+64.94	143.44 LT
38	896.00	201+85.77	143.28 LT
39	890.00	202+17.79	147.15 LT
40	896.00	202+35.75	143.69 LT
41	887.66	202+82.96	152.03 LT
42	887.62	202+82.09	140.00 LT
43	887.63	202+19.03	139.92 LT
44	887.66	202+88.02	152.12 LT
45	887.66	203+33.07	151.95 LT
46	887.62	203.33.53	140.04 LT
47	887.62	203+61	139.89 LT
48	896.00	202+47.56	103.72 LT
49	887.47	202+48.97	87.84 LT
50	887.47	203+61	87.96 LT
51	887.27	202+49.16	23.03 LT
52	887.22	202+68.00	24.50 LT
53	887.20	202+68.00	19.50 LT
54	887.22	203+08.00	24.50 LT
55	887.20	203+08.00	19.50 LT
56	887.22	203+47.00	24.50 LT
57	887.20	203+47.00	19.50 LT
58	887.27	203+61	23.03 LT
59	887.27	202+87.86	23.17 LT
60	887.27	203+28.01	23.25 LT
61	887.66	203+28.08	152.04 LT
62	889.92	204+47.98	5.98 LT

NOTES:

1. WATER QUALITY POND FULL WATER LEVEL ELEVATION: 891.97'
2. WATER QUALITY POND 20% SEDIMENTATION ELEVATION: 889.97'
3. 0.75' x 3' x 3' REVET MATTRESS PLACED ON TOP OF FILTER MEDIA AT DRAINAGE DOWNSPOUT
4. SEE WATER QUALITY POND DETAILS FOR POND AND CONCRETE DETAILS.

STATE OF TEXAS
ANTHONY J. SCHNEIDER
71848
LICENSED
PROFESSIONAL ENGINEER

2/24/03

NORTH BRANCH WATER QUALITY POND EAST

PLAN

STA 201+60 TO STA 204+60

SH 45 / US 183 INTERCHANGE

SCALE: PLAN 1": 40'

HNTB ARCHITECTS ENGINEERS PLANNERS
The HNTB Companies

Texas Department of Transportation

© 2003 TEXAS TURNPIKE AUTHORITY DIVISION

DRAWING PREPARED BY:	HNTB CORPORATION		
SHEET 5 OF 14	45WQPL02.DGN		
FED. RD. DIV. NO.	FEDERAL AID PROJECT NO.		SHEET NO.
6			668
DGN: AJS	STATE	DIST.	COUNTY
CHK DGN: MGM	TEXAS	14	WILLIAMSON
DWN: KZK	CONT.	SECT.	JOB / HIGHWAY NO.
CHK DES: CAD	0683	01	069 / SH 45

Pen Tables: \\...\32058\Teahprod\rdwy\plots\32058dmng.pen
Design Filename: I:\Jobs\32058\Teahprod\Rdwy\Dwg\Phs1\Dmng\45wqp102.dgn

Scale: 10.000000:1.000000
Plotted on: 24-FEB-2003 10:45

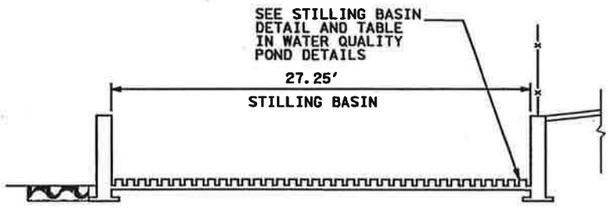

SECTION D4-D4

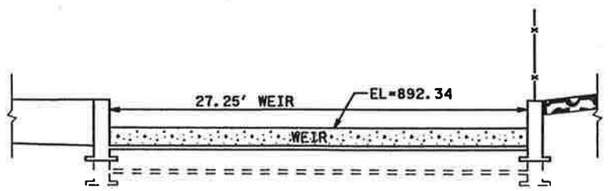

SECTION D3-D3

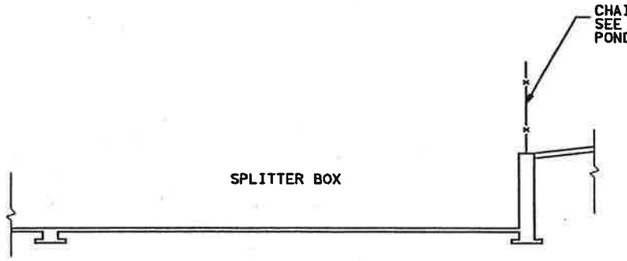

SECTION D2-D2

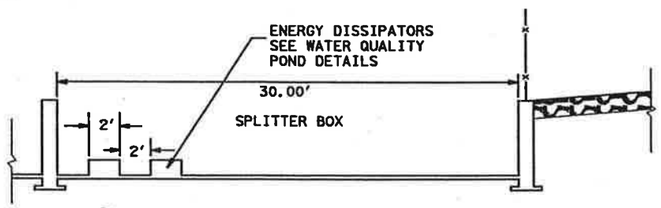

SECTION D1-D1

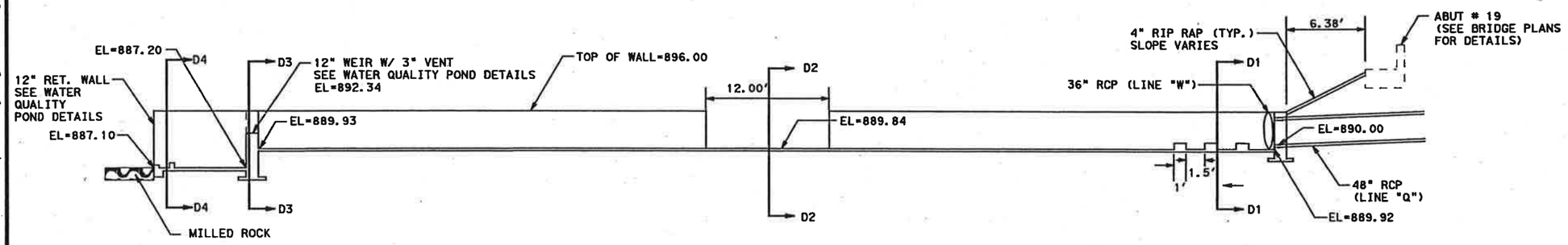

SECTION D-D

STATE OF TEXAS
ANTHONY J. SCHNEIDER
71848
LICENSED
PROFESSIONAL ENGINEER

2/24/03

NORTH BRANCH
WATER QUALITY POND EAST
SECTION D - D

SH 45 / US 183 INTERCHANGE

SCALE: PLAN 1" = 10'
PROFILE 1" = 20'

HNTB ARCHITECTS ENGINEERS PLANNERS
The HNTB Companies

Texas Department of Transportation
© 2003 TEXAS TURNPIKE AUTHORITY DIVISION

DRAWING PREPARED BY:	HNTB CORPORATION			
SHEET 6 OF 14	45WQTS04.DGN			
FED. RD. DIV. NO.	FEDERAL AID PROJECT NO.			SHEET NO.
6				669
DGN: AJS	STATE	DIST.	COUNTY	
CHK DGN: MGM	TEXAS	14	WILLIAMSON	
DWG: KZK	CONT.	SECT.	JOB	HIGHWAY NO.
CHK DWG: CAD	0683	01	069	SH 45

Pen Tables: I:\jobs\32058\techprod\rdwy\plots\32058drng.pen
Design Filename: I:\jobs\32058\Techprod\Rdwy\Dwg\Phal\Drng\45wqts04.dgn

Scale: 10.000000:1.000000
Plotted on: 24-FEB-2003 10:42

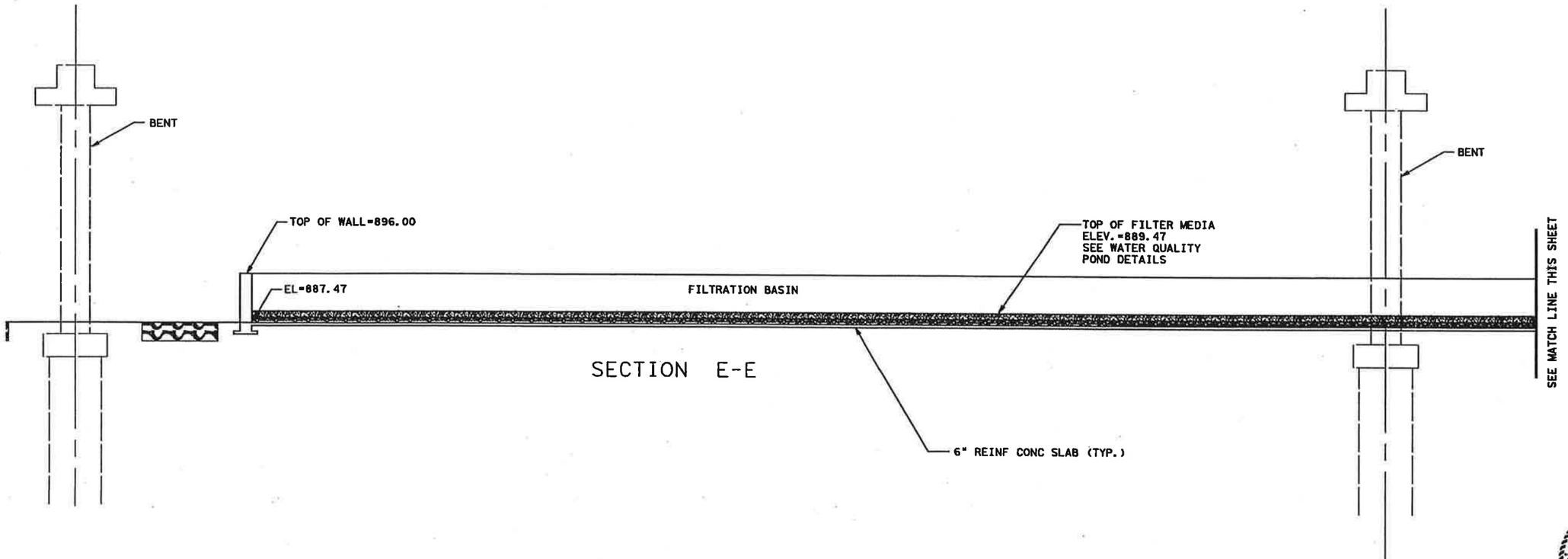

SECTION E-E

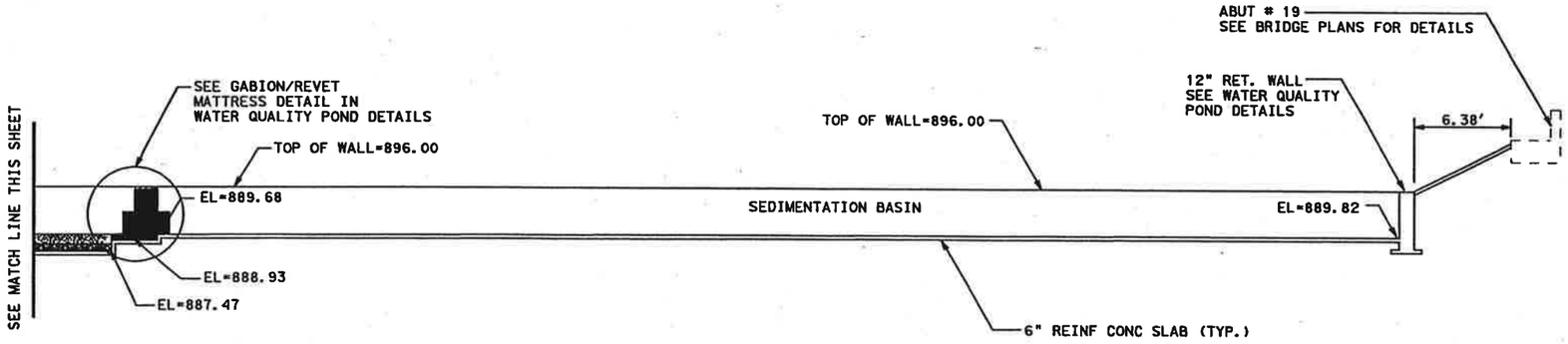

SECTION E-E

STATE OF TEXAS
ANTHONY J. SCHNEIDER
71848
LICENSED
PROFESSIONAL ENGINEER

2/24/03

NORTH BRANCH
WATER QUALITY POND EAST
SECTION E - E

SH 45 / US 183 INTERCHANGE

SCALE: PLAN 1" = 10'
PROFILE 1" = 20'

HNTB ARCHITECTS ENGINEERS PLANNERS
The HNTB Companies

Texas Department of Transportation
© 2003 TEXAS TURNPIKE AUTHORITY DIVISION

DRAWING PREPARED BY:				HNTB CORPORATION	
SHEET 7 OF 14				45WQTS05.DGN	
FED. RD. DIV. NO.	FEDERAL AID PROJECT NO.				SHEET NO.
6					670
DSN: AJS	STATE	DIST.	COUNTY		
CHK. DSN: MGM	TEXAS	14	WILLIAMSON		
DWN: KZK	CONT.	SECT.	JOB	HIGHWAY NO.	
CHK. DWG: CAD	0683	01	069	SH 45	

Pen Table:I:\...\32058\techprod\rdwy\plots\32058drng.pen
Design Filename: I:\Jobs\32058\Techprod\Rdwy\Dwg\Phs1\Drng\45wqte05.dgn

Scale: 10.000000:1.000000
Plotted on: 24-FEB-2003 10:43

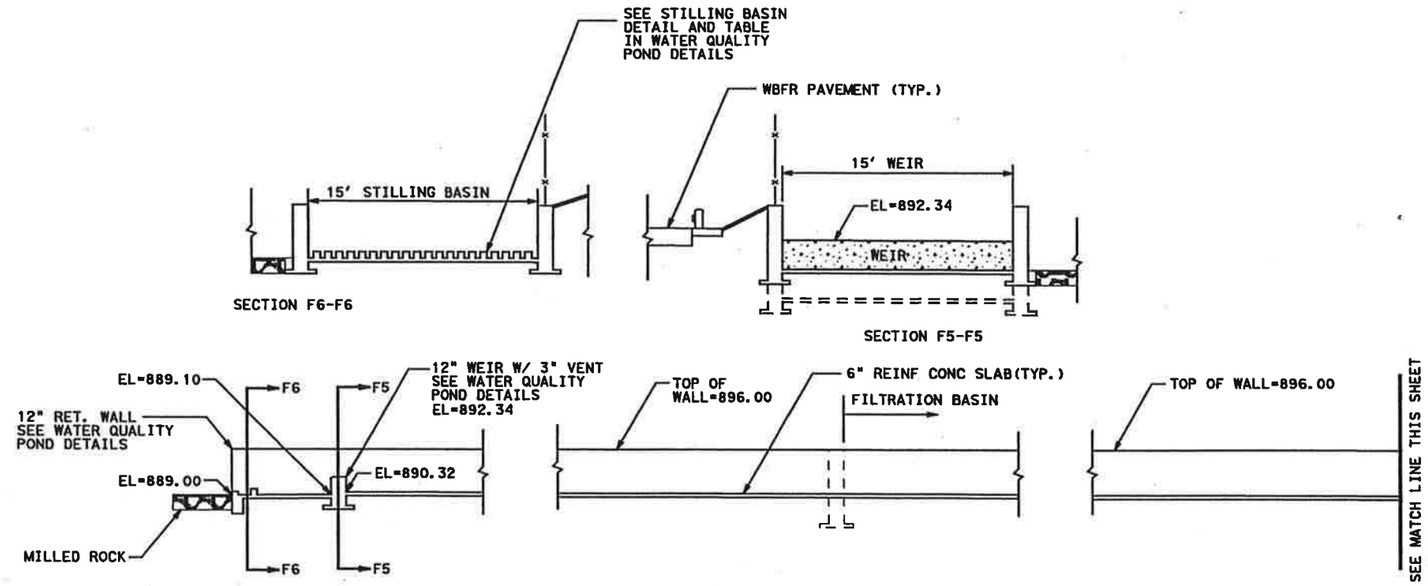

SECTION F-F

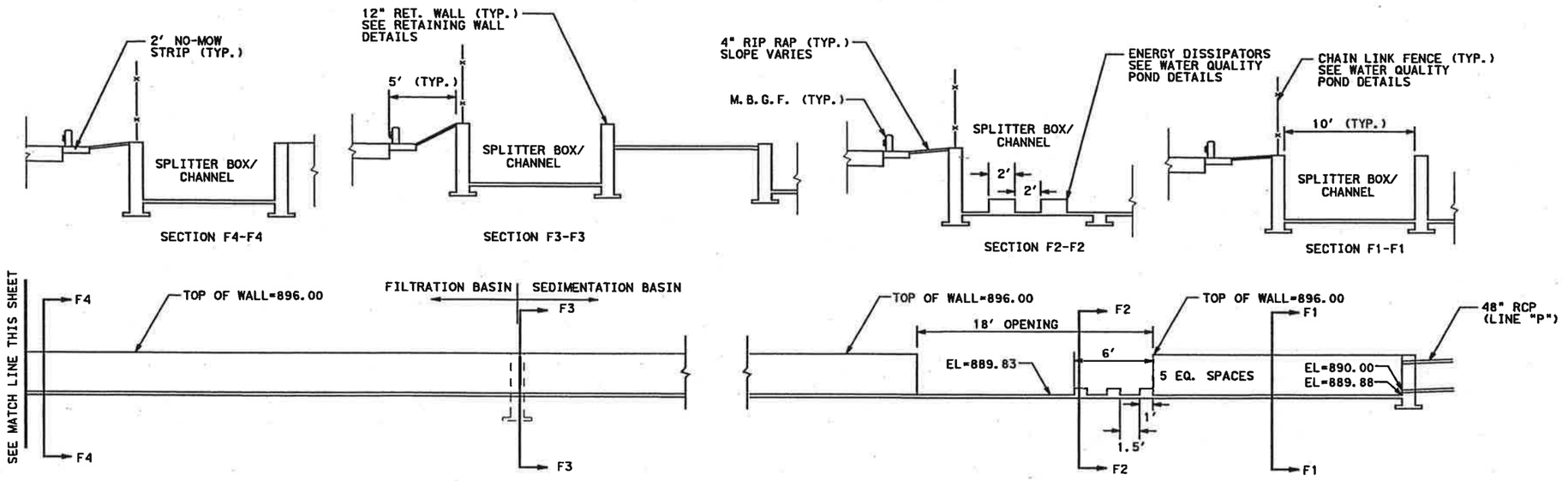

SECTION F-F

STATE OF TEXAS
ANTHONY J. SCHNEIDER
71848
LICENSED
PROFESSIONAL ENGINEER
2/24/03

NORTH BRANCH
WATER QUALITY POND EAST
SECTION F - F

SH 45 / US 183 INTERCHANGE

SCALE: PLAN 1" = 10'
PROFILE 1" = 20'

HNTB ARCHITECTS ENGINEERS PLANNERS
The HNTB Companies

Texas Department of Transportation
© 2003 TEXAS TURNPIKE AUTHORITY DIVISION

DRAWING PREPARED BY:			HNTB CORPORATION	
SHEET 8 OF 14			45WQTS06.DGN	
FED. RD. DIV. NO.	FEDERAL AID PROJECT NO.			SHEET NO.
6				671
DGN: AJS	STATE	DIST.	COUNTY	
CHK. DGN: MGM	TEXAS	14	WILLIAMSON	
DRN: KZK	CONT.	SECT.	JOB	HIGHWAY NO.
CHK. DSC: CAD	0683	01	069	SH 45

Pen Tables: I:\Jobs\32058\Techprod\rdwy\plots\32058drng.pen
Design Filename: I:\Jobs\32058\Techprod\Rdwy\Dwg\Phal\Drng\45wqts06.dgn

Scale: 20.000000:1.000000
Plotted on: 21-FEB-2003 08:41

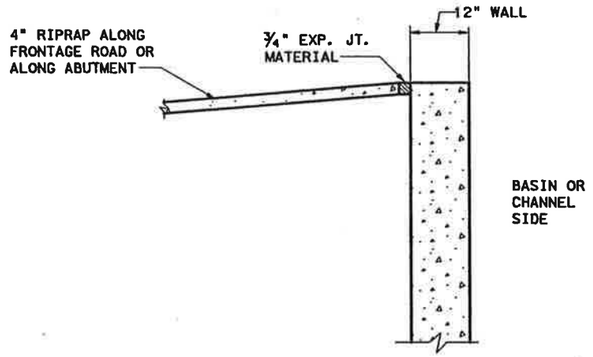

RIPRAP AT EXTERIOR WALLS

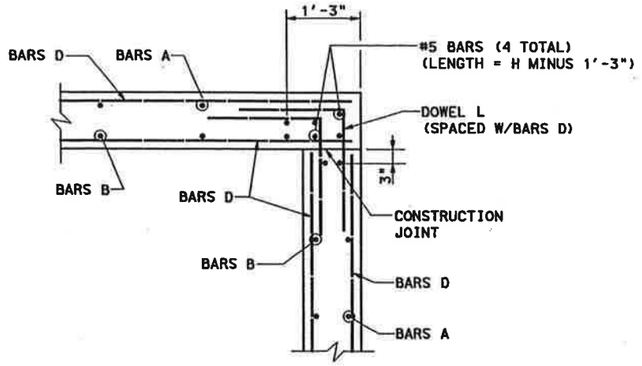

PLAN - WALL CORNER DETAIL

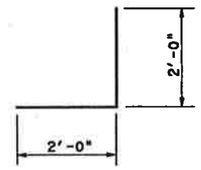

DOWEL L (#5)

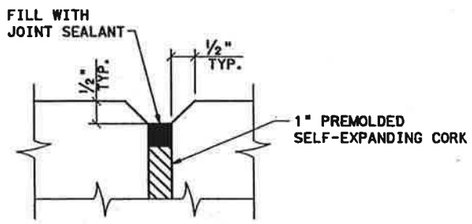

DETAIL A

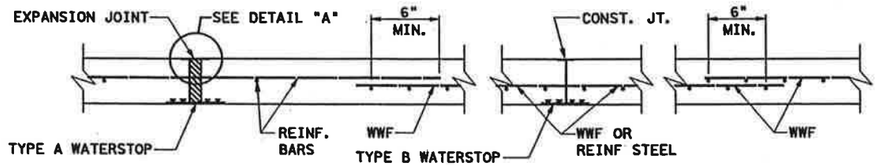

NOTE: FOR WATERSTOP DETAILS, SEE SHEET "RETAINING WALLS MISCELLANEOUS DETAILS (RW 2)."

DETAILS OF WWF, CONST JOINT AND EXPANSION JOINT
N.T.S.

CONCRETE WALL TYPE SUMMARY

POND	WALL LOCATION	LIMITS	TOP OF WALL	BOTTOM OF FOOTING	HEIGHT "H"	WALL TYPE*
WEST	SEDIMENTATION BASIN WEST WALL	ALL	906.00	894.25	11.75	HC-12
	SEDIMENTATION BASIN NORTH WALL	WEST END TO FILTRATION BASIN	906.00	894.25	11.75	HC-12
	SEDIMENTATION BASIN EAST WALL	ALL	906.00	894.25	11.75	HC-12
	SEDIMENTATION BASIN SOUTH WALL	ALL	906.00	894.25	11.75	HC-12
	NORTH CHANNEL NORTH WALL	WEST END TO WEIR	906.00	894.25	11.75	HC-12
	NORTH CHANNEL NORTH WALL	WEIR TO EAST OUTFALL	906.00	892.50	13.50	HC-13
	NORTH CHANNEL SOUTH WALL	FILTRATION BASIN TO WEIR	906.00	891.00	15.00	HC-15
	NORTH CHANNEL SOUTH WALL	WEIR TO EAST OUTFALL	906.00	892.50	13.50	HC-13
	SOUTH CHANNEL NORTH WALL	SEDIMENTATION BASIN TO WEIR	906.00	894.25	11.75	HC-12
	SOUTH CHANNEL NORTH WALL	WEIR TO EAST OUTFALL	906.00	893.00	13.00	HC-13
	SOUTH CHANNEL SOUTH WALL	WEST END TO WEIR	906.00	894.25	11.75	HC-12
	SOUTH CHANNEL SOUTH WALL	WEIR TO EAST OUTFALL	906.00	893.00	13.00	HC-13
	FILTRATION BASIN NORTH WALL	WEST WALL TO EAST WALL	906.00	891.00	15.00	HC-15
	FILTRATION BASIN WEST WALL	ALL	906.00	892.00	14.00	HC-14
	FILTRATION BASIN SOUTH WALL	ALL	906.00	891.00	15.00	HC-15
	FILTRATION BASIN EAST WALL	ALL	906.00	891.00	15.00	HC-15
EAST	FILTRATION BASIN WEST WALL	ALL	896.00	884.50	11.50	HC-12
	FILTRATION BASIN NORTH WALL	ALL	896.00	884.50	11.50	HC-12
	FILTRATION BASIN SOUTH WALL	ALL	896.00	884.50	11.50	HC-12
	FILTRATION BASIN EAST WALL	ALL	896.00	884.50	11.50	HC-12
	SEDIMENTATION BASIN NORTH WALL	ALL	896.00	887.25	8.75	HC-9
	SEDIMENTATION BASIN WEST WALL	SOUTH OF FILTRATION BASIN	896.00	887.25	8.75	HC-9
	SEDIMENTATION BASIN SOUTH WALLS	ALL	896.00	887.25	8.75	HC-9
	SEDIMENTATION BASIN EAST WALL	ALL	896.00	887.25	8.75	HC-9
	NORTH CHANNEL NORTH WALL	EAST END TO WEIR	896.00	887.25	8.75	HC-9
	NORTH CHANNEL NORTH WALL	WEIR TO WEST OUTFALL	896.00	886.50	9.50	HC-9
	NORTH CHANNEL SOUTH WALL	SEDIMENTATION BASIN TO WEIR	896.00	887.25	8.75	HC-9
	NORTH CHANNEL SOUTH WALL	WEIR TO WEST OUTFALL	896.00	886.50	9.50	HC-9
	SOUTH OUTFALL EACH SIDE	SEDIMENTATION BASIN TO WEST OUTFALL	896.00	884.50	11.50	HC-12

* WALL TYPE REFERENCES RETAINING WALLS FROM STANDARD DRAWING "RW 1 (H) C". NUMBER REPRESENTS WALL HEIGHT "H".

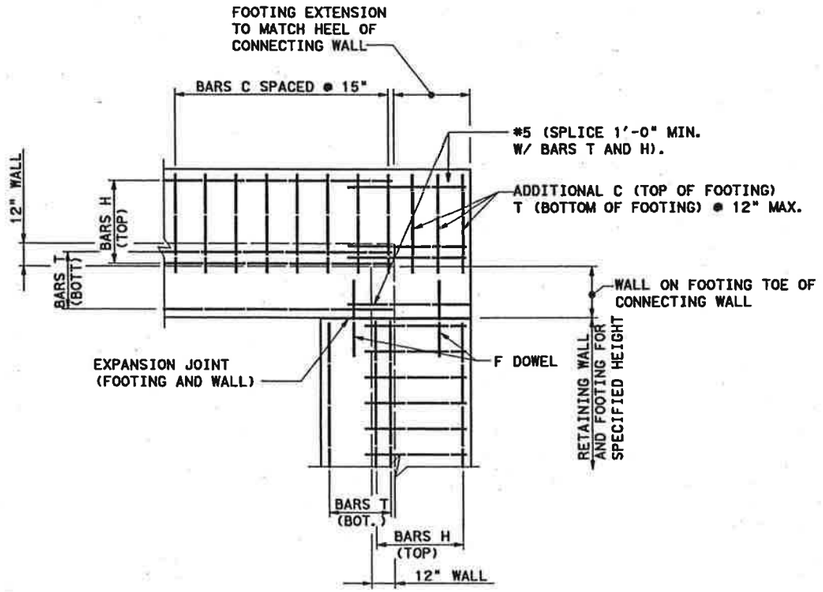

PLAN - FOOTING CORNER
N.T.S.

STATE OF TEXAS
STEPHEN A. HRNCIR
67245
LICENSED PROFESSIONAL ENGINEER
2-21-03

WATER QUALITY POND DETAILS

SH 45 / US 183 INTERCHANGE

SCALE: AS SHOWN

HNTB ARCHITECTS ENGINEERS PLANNERS
The HNTB Companies

Texas Department of Transportation
© 2003 TEXAS TURNPIKE AUTHORITY DIVISION

DRAWING PREPARED BY:			HNTB CORPORATION	
SHEET 9 OF 14			45dd0899.dgn	
FED. RD. DIV. NO.	FEDERAL AID PROJECT NO.			SHEET NO.
6	MG 2002 (243)			672
DSN: SAH	STATE	DIST.	COUNTY	
CHK DSN: XZ	TEXAS	14	WILLIAMSON	
DWN: TJG	CONT.	SECT.	JOB	HIGHWAY NO.
CHK DWN: SAH	0683	01	069	SH 45

Pen Table is: \Jobs\32058\Techprod\rdwy\plots\32058drng.pen
Design Filename is: \Jobs\32058\Techprod\Rdwy\Dwg\Phase1\Drng\45dd0899.dgn

Scale: 20.000000:1.000000
Plotted on: 21-FEB-2003 08:41

TABLE OF WEIR VARIABLES AND REINFORCING

POND	LOCATION	W_{WEIR}	L_{WEIR}	TOP OF WEIR ELEV.	BOTTOM OF WEIR ELEV.	H_{Design}	T_{Weir}	T_W	H_{Weir}	A_W (#5) NO.	A_W (#5) LENGTH	A_W (#5) WEIGHT	B_W (#5) NO.	B_W (#5) LENGTH	B_W (#5) WEIGHT	C_W NO.	C_W SIZE	C_W LENGTH	C_W WEIGHT	D_W (#5) NO.	D_W (#5) LENGTH	D_W (#5) WEIGHT	H (#5) NO.	H (#5) LENGTH	H (#5) WEIGHT	F (#8) NO.	F (#8) LENGTH	F (#8) WEIGHT	T (# 5) NO.	T (# 5) LENGTH	T (# 5) WEIGHT	U (# 5) NO.	U (# 5) LENGTH	U (# 5) WEIGHT	CONC. QUAN. (CY)
WEST	NORTH OUTFALL	25'	19'-9"	901.38	892.50	8.88'	1'-11 1/2"	2'-7 1/2"	2'-10 1/2"	50	9'-5"	491	26	8'-5 1/2"	229	26	6	4'-4"	169	18	24'-8"	463	4	19'-5"	81	6	3'-0"	48	3	19'-5"	61	26	8'-4"	226	12.1
WEST	SOUTH OUTFALL	25'	19'-9"	901.38	893.00	8.38'	1'-11 1/2"	2'-7 1/2"	2'-10 1/2"	49	8'-11"	465	26	7'-11 1/2"	216	26	6	4'-4"	169	18	24'-8"	463	4	19'-5"	81	6	3'-0"	48	3	19'-5"	61	26	8'-4"	226	11.6
EAST	NORTH OUTFALL	20'	16'-1"	892.34	886.50	5.84'	1'-5"	1'-11 1/2"	1'-10"	40	5'-10"	128	21	5'-5"	119	21	4	3'-4"	47	12	19'-8"	246	4	15'-9"	66	6	3'-0"	48	3	15'-9"	49	21	8'-4"	182	6.5
EAST	SOUTH OUTFALL	17.2'	12'-3 3/8"	892.34	884.50	7.84'	1'-9"	2'-5 1/2"	2'-6"	18	8'-2"	298	18	7'-5"	139	17	5	4'-0"	71	16	16'-10 1/2"	281	4	11'-11"	50	6	3'-0"	48	3	11'-11"	37	18	8'-4"	156	7.1

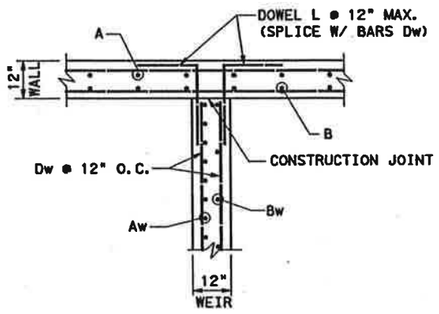

PLAN AT WIER/WALL INTERFACE

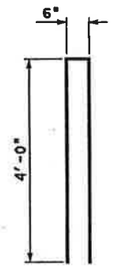

BARS U

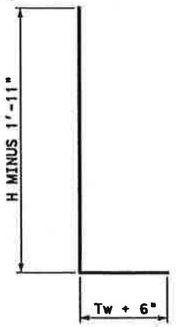

BARS Aw

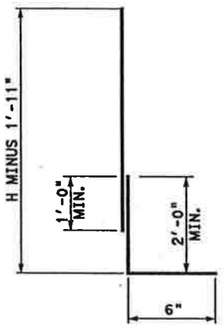

BARS Bw

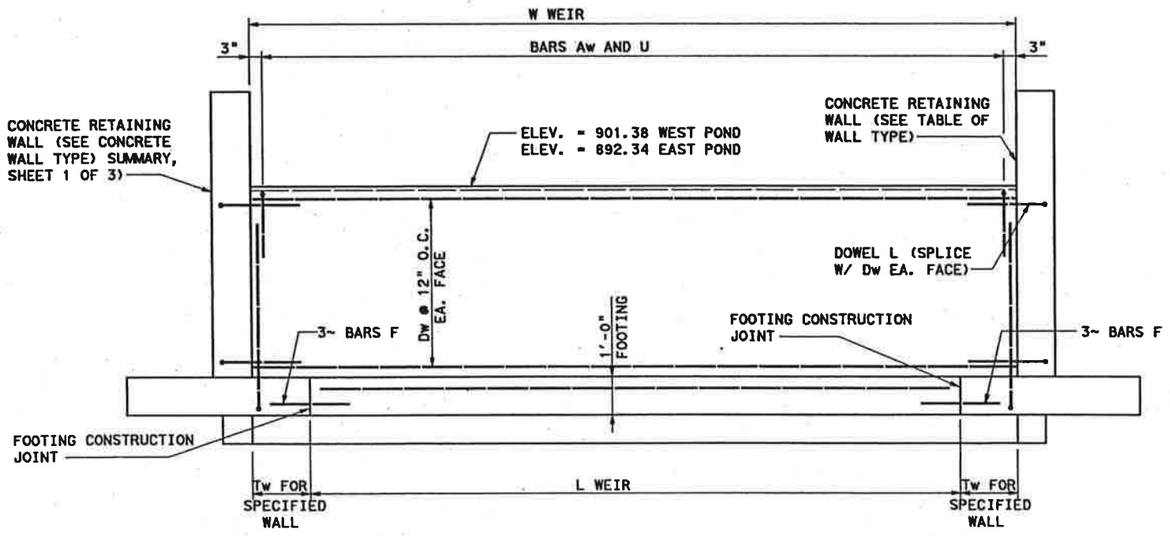

WEIR ELEVATION

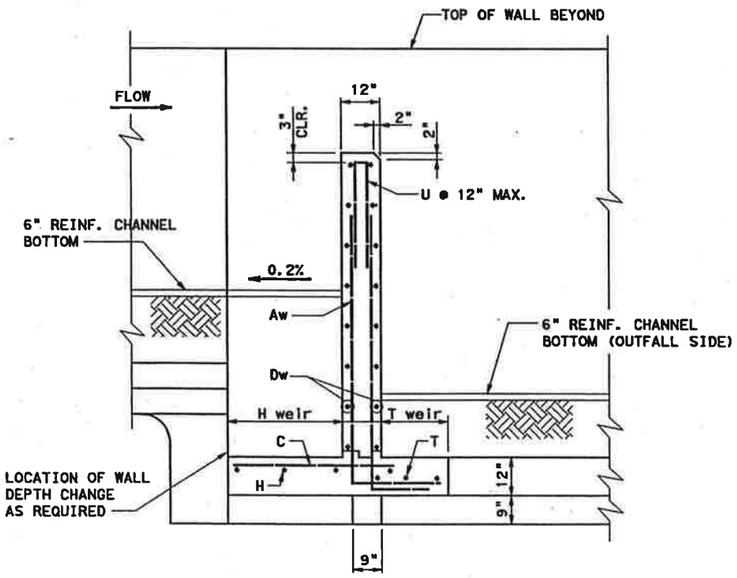

WEIR TYPICAL SECTION

STATE OF TEXAS
STEPHEN A. HRNCIR
67245
LICENSED
PROFESSIONAL ENGINEER
2-21-03

WATER QUALITY POND DETAILS

SH 45 / US 183 INTERCHANGE

SCALE:
AS SHOWN

HNTB ARCHITECTS ENGINEERS PLANNERS
The HNTB Companies

Texas Department of Transportation
© 2003 TEXAS TURNPIKE AUTHORITY DIVISION

DRAWING PREPARED BY:			HNTB CORPORATION	
SHEET 10 OF 14			45dd0898.dgn	
FED. RD. DIV. NO.	FEDERAL AID PROJECT NO.			SHEET NO.
6	MG 2002 (243)			673
DGN: SAH	STATE	DIST.	COUNTY	
CHK. DSN: XZ	TEXAS	14	WILLIAMSON	
DWG: TJG	CONT.	SECT.	JOB	HIGHWAY NO.
CHK. DRG: SAH	0683	01	069	SH 45

Pen Tables: \Jobs\32058\Techprod\Rdwy\plotsh\32058drng.pen
Design Filename: I:\Jobs\32058\Techprod\Rdwy\Dwg\Phal\Drng\45dd0898.dgn

Scale: 20.000000:1.000000
Plotted on: 21-FEB-2003 08:41

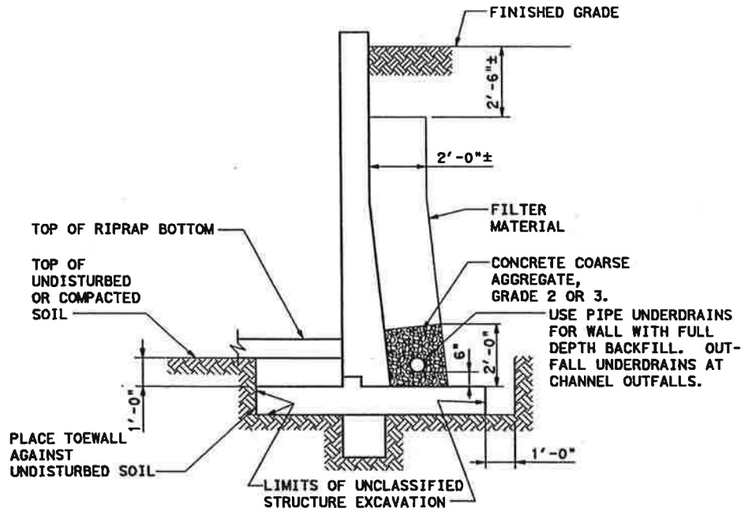

BACKFILL FILTER MATERIAL DETAILS AND EXCAVATION DIAGRAM

N.T.S.

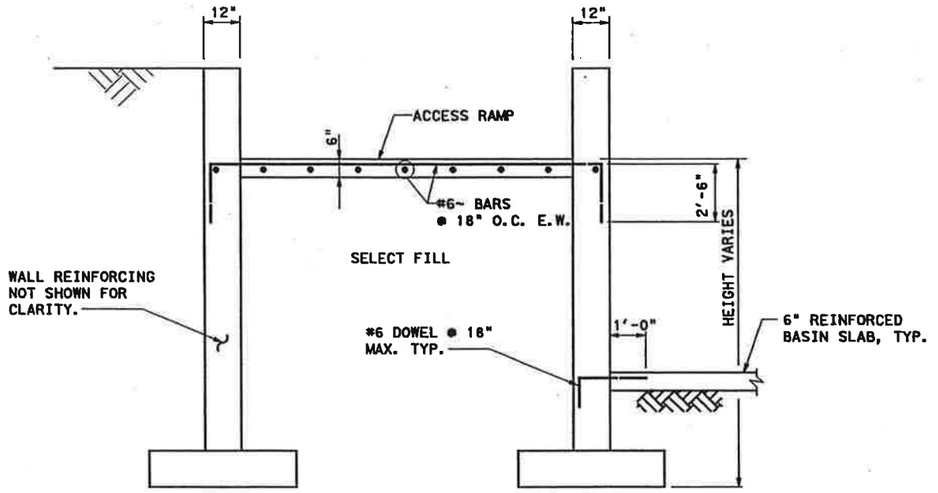

SECTION D-D

N.T.S.

NOTE: USE THE SAME RETAINING WALL TYPE ON BOTH SIDES OF ACCESS RAMP. SEE CONCRETE WALL TYPE SUMMARY ON SHEET 1 OF 3.

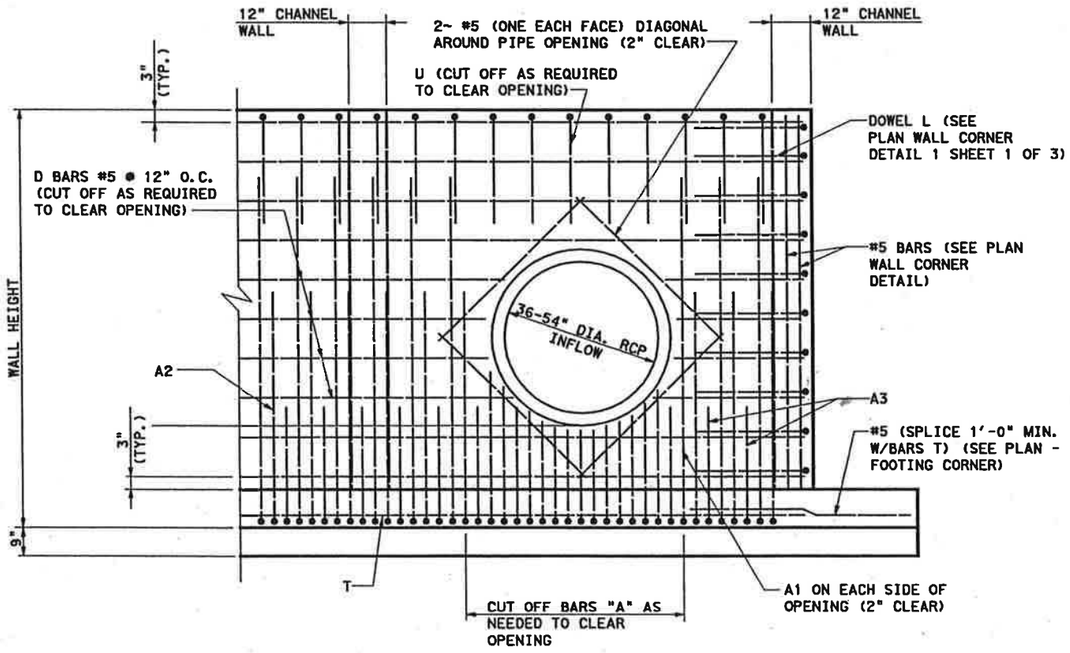

OPENING FOR PIPE INFLOW WEST POND (EAST POND SIMILAR)

N.T.S.

STATE OF TEXAS
STEPHEN A. HRNCIR
67245
LICENSED PROFESSIONAL ENGINEER
2-21-03

WATER QUALITY POND DETAILS

SH 45 / US 183 INTERCHANGE

SCALE:
AS SHOWN

HNTB ARCHITECTS ENGINEERS PLANNERS
The HNTB Companies

Texas Department of Transportation

© 2003 TEXAS TURNPIKE AUTHORITY DIVISION

DRAWING PREPARED BY:	HNTB CORPORATION			
SHEET 11 OF 14	45dd0897.dgn			
FED. AID DIV. NO.	FEDERAL AID PROJECT NO.			SHEET NO.
6	MG 2002 (243)			674
DGN: SAH	STATE	DIST.	COUNTY	
CHK. DGN: XZ	TEXAS	14	WILLIAMSON	
TRNS: TJG	CONT.	SECT.	JOB	HIGHWAY NO.
CHK. DES: SAH	0683	01	069	SH 45

Pen Table: I:\Jobs\32058\techprod\Vrdwy\plots\32058drng.pen
Design Filename: I:\Jobs\32058\Techprod\Rdwy\Dwg\Phs1\Drng\45dd0897.dgn

Scale: 4.000000:1.000000
Plotted on: 16-APR-2003 15:21

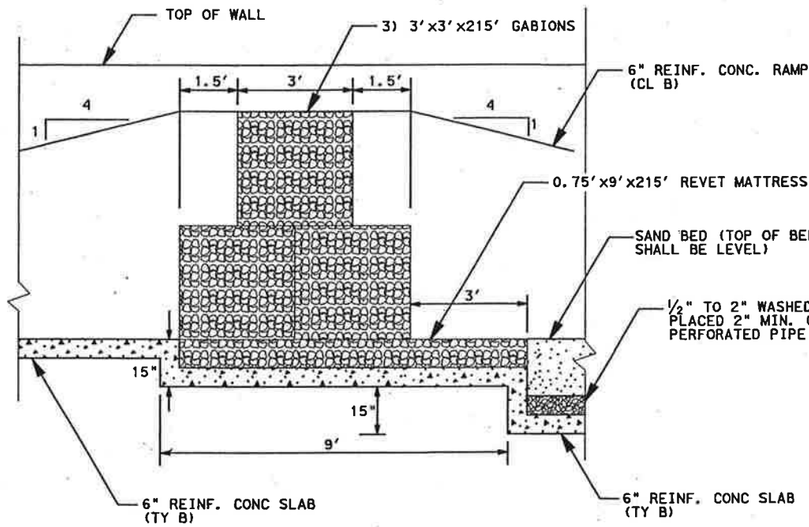

GABION/REVET MATTRESS DETAIL
WEST WATER QUALITY POND
SCALE: 1" = 4'

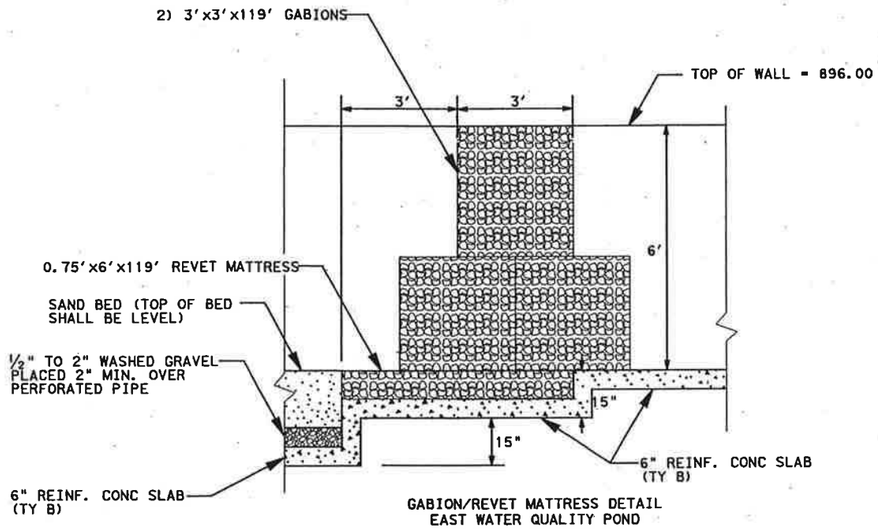

GABION/REVET MATTRESS DETAIL
EAST WATER QUALITY POND
SCALE: 1" = 4'

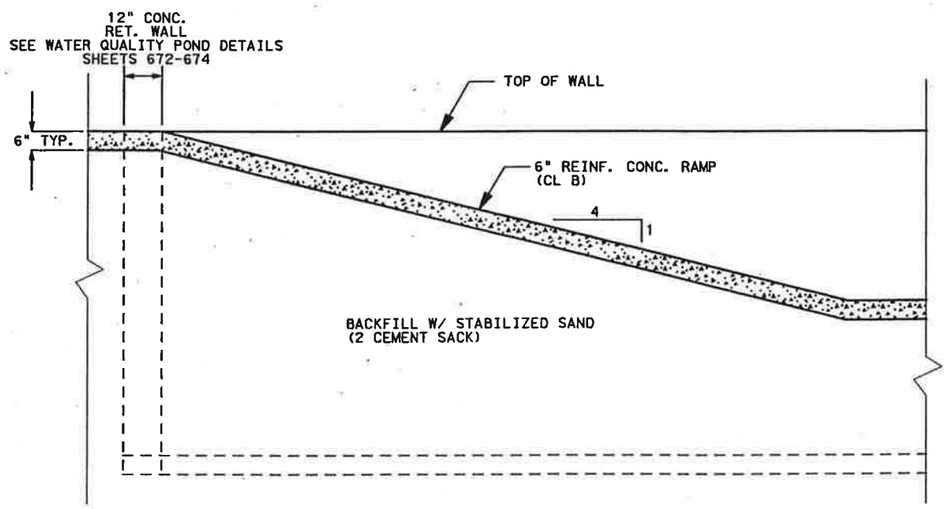

TYPICAL RAMP DETAIL
SCALE: 1" = 4'

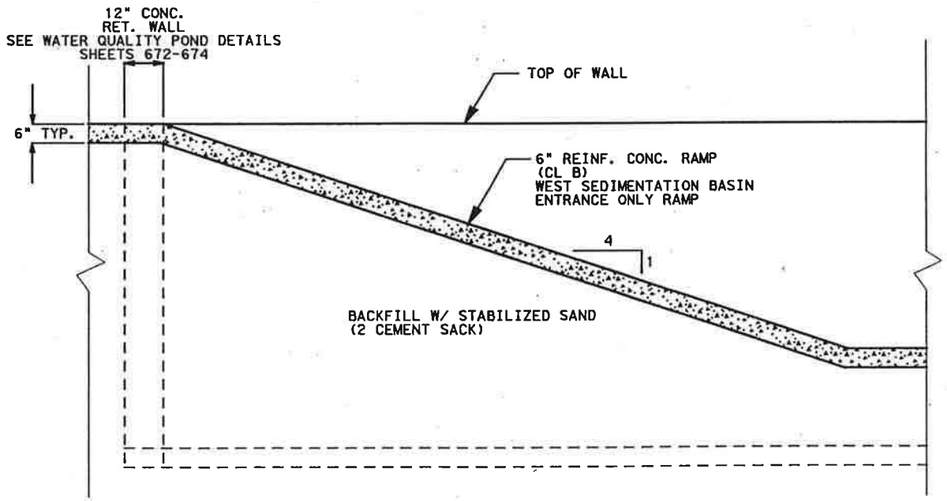

WEST SEDIMENTATION BASIN
RAMP DETAIL
SCALE: 1" = 4'

STATE OF TEXAS
ANTHONY J. SCHNEIDER
71848
LICENSED
PROFESSIONAL ENGINEER

4/16/03

NORTH BRANCH WATER QUALITY POND (EAST AND WEST)

DETAILS 1

SH 45 / US 183 INTERCHANGE

SCALE: AS SHOWN

HNTB ARCHITECTS ENGINEERS PLANNERS
The HNTB Companies

Texas Department of Transportation
© 2003 TEXAS TURNPIKE AUTHORITY DIVISION

DRAWING PREPARED BY: HNTB CORPORATION				
SHEET 12 OF 14			45WQDT01.DGN	
FED. RD. DIV. NO.	FEDERAL AID PROJECT NO.			SHEET NO.
6				675
DGN: AJS	STATE	DIST.	COUNTY	
CHK. DGN: MGM	TEXAS	14	WILLIAMSON	
DWG: KZK	CONT.	SECT.	JOB	HIGHWAY NO.
CHK. DWG: CAD	0683	01	069	SH 45

Pen Table: I:\...32058\feahprod\rdwy\plots\32058drng.pen
Design Filename: I:\Jobs\32058\Feahprod\Rdwy\Dwg\Phe1\Drng\45wqdt01.dgn

Scale: 4.000000:1.000000
Plotted on: 24-FEB-2003 10:45

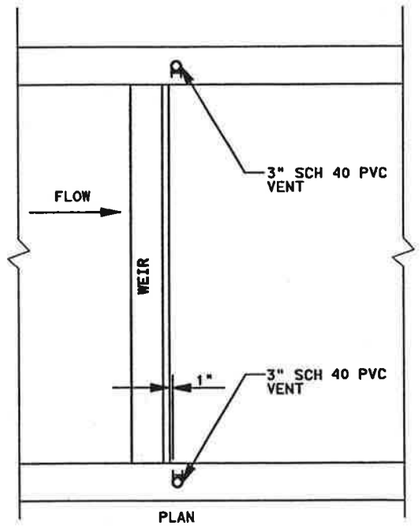

PLAN

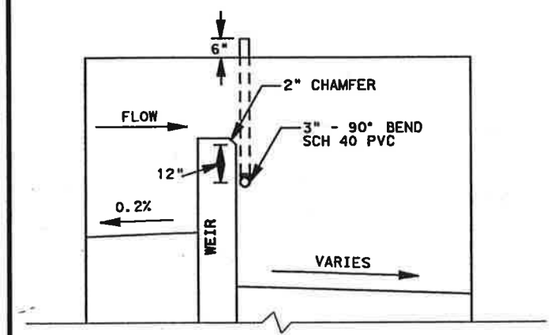

PROFILE

WEIR VENT DETAIL
SCALE: 1" = 4'

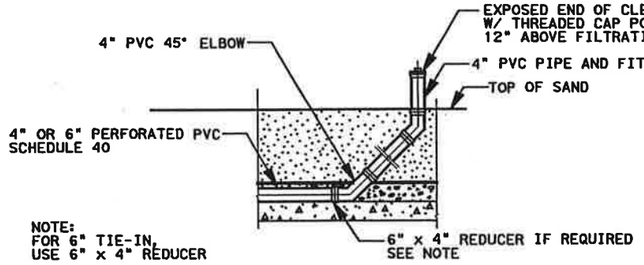

FILTRATION BED CLEAN-OUT DETAIL
SCALE: 1" = 4'

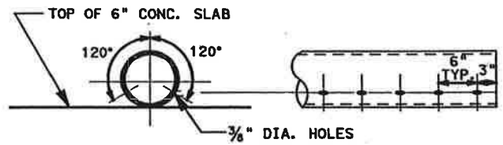

4" AND 6" PERFORATED PVC HOLE PLACEMENT DETAIL
SCALE: 1" = 2'

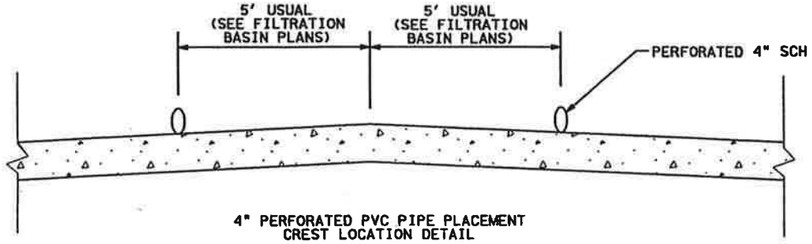

4" PERFORATED PVC PIPE PLACEMENT CREST LOCATION DETAIL
SCALE: PLAN 1" = 4'
PROFILE 1" = 2'

NOTE: FOR GRAVEL AND SAND FILTER MEDIA SEE DETAIL THIS SHEET.

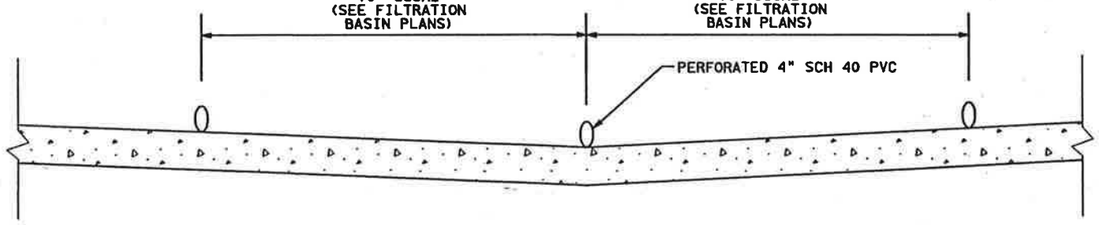

4" PERFORATED PVC PIPE PLACEMENT DEPRESSION LOCATION DETAIL
SCALE: PLAN 1" = 4'
PROFILE 1" = 2'

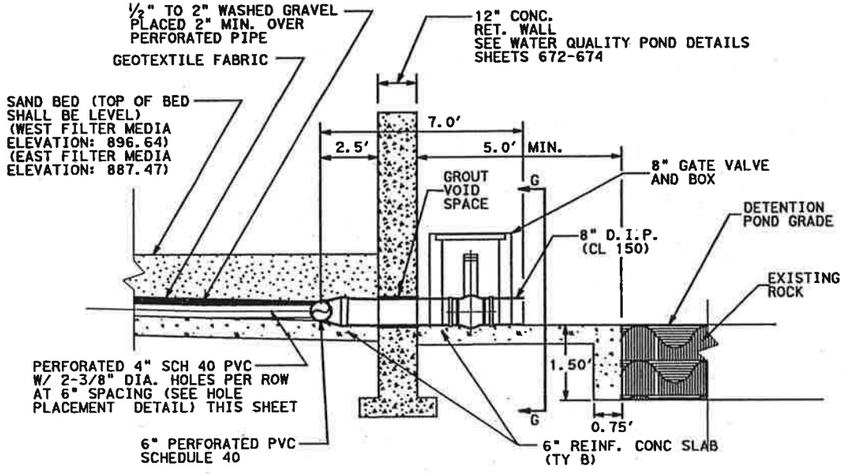

FILTRATION BASIN OUTFALL DETAIL
SCALE: 1" = 4'

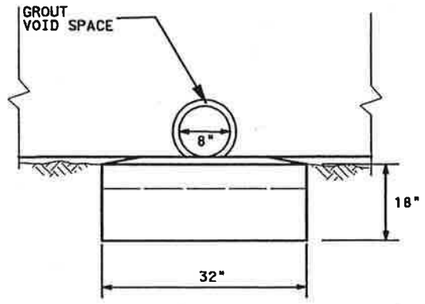

SECTION G - G
SCALE: 1" = 2'

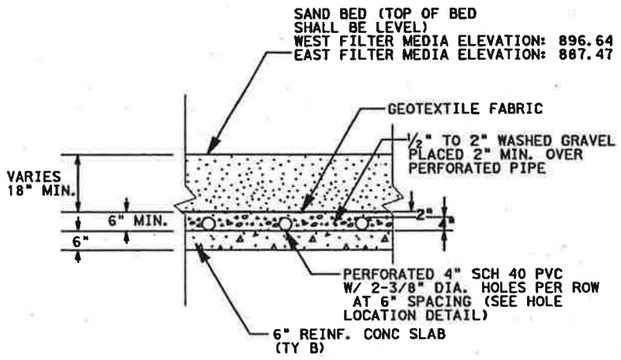

SAND FILTRATION BED DETAIL
SCALE: 1" = 4'

STATE OF TEXAS
ANTHONY J. SCHNEIDER
71848
LICENSED
PROFESSIONAL ENGINEER

2/24/03

NORTH BRANCH WATER QUALITY POND (EAST AND WEST)

DETAILS 2

SH 45 / US 183 INTERCHANGE

SCALE: AS SHOWN

HNTB ARCHITECTS ENGINEERS PLANNERS
The HNTB Companies

Texas Department of Transportation
© 2003 TEXAS TURNPIKE AUTHORITY DIVISION

DRAWING PREPARED BY:	HNTB CORPORATION			
SHEET 13 OF 14	45WQDT02.DGN			
FED. RD. DIV. NO.	FEDERAL AID PROJECT NO.			SHEET NO.
6				676
DGN: AJS	STATE	DIST.	COUNTY	
CHK. DGN: MGM	TEXAS	14	WILLIAMSON	
DWG: KZK	CONT.	SECT.	JOB	HIGHWAY NO.
CHK. DWG: CAD	0683	01	069	SH 45

Pen Table: I:\Jo...32058\techprod\rdwy\plots\32058drng.pen
Design Filename: I:\Jobs\32058\Techprod\Rdwy\Dwg\Ph1\Drng\45wqdt02.dgn

Scale: 4.000000:1.000000
Plotted on: 20-FEB-2003 19:24

Pen Tables: V:\32058\techprod\rdwy\plots\32058drng.pen
Design Filename: I:\Jobs\32058\Techprod\Rdwy\Dwg\Phs1\Drng\45wqdt03.dgn

1. ALL POSTS, TUBES, AND RAILS SHALL BE SCH. 40.
2. ALL CHAIN LINK FABRIC SHALL BE 9 GAUGE.
3. FINAL FENCE LOCATION SHALL BE DIRECTED BY THE ENGINEER.
4. 12' WIDE GATES SHALL BE CONSTRUCTED AT THE ACCESS RAMP. HINGES SHALL BE LOCATED SUCH THAT GATES MAY SWING IN EITHER DIRECTION.

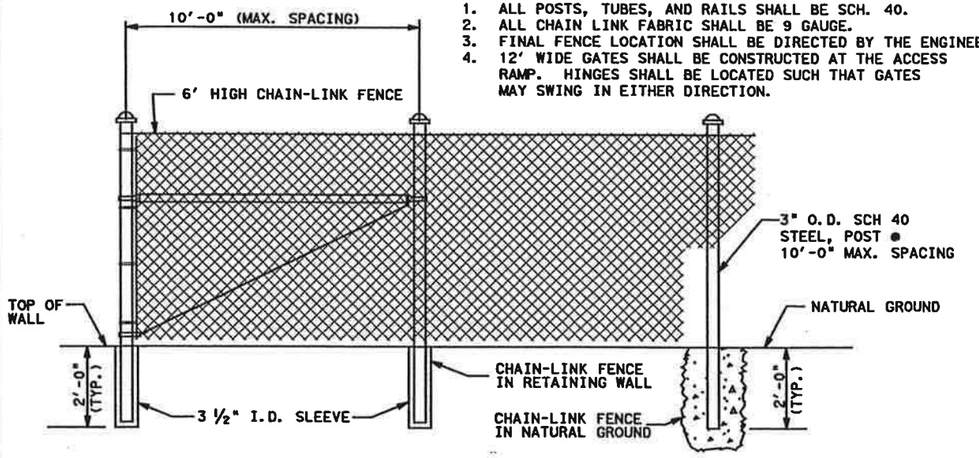

CHAIN-LINK FENCE ALONG POND WALLS

N. T. S.

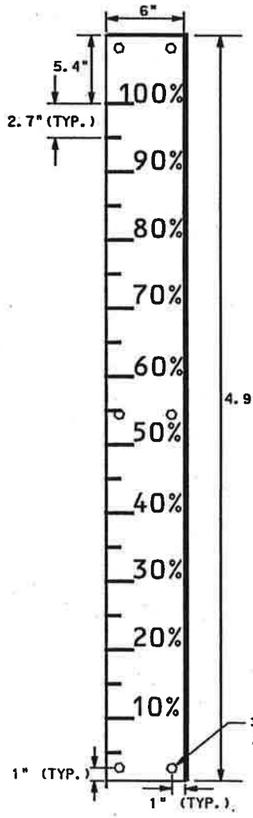

STAFF GAUGE DETAIL
NORTH BRANCH WATER
QUALITY POND WEST
SCALE: 1" = 1'

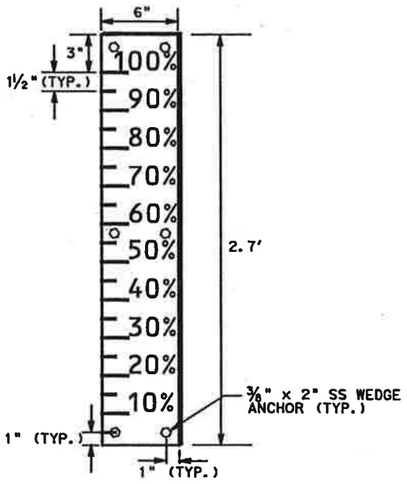

STAFF GAUGE DETAIL
NORTH BRANCH
QUALITY POND EAST
SCALE: 1" = 1'

NOTE:
1. STAFF GAUGES ARE TO BE FRP WITH 1.5" NUMERIALS AS MANUFACTURED BY PLASTI-FAB OR APPROVED EQUAL.
2. STAFF GAUGES ARE TO BE MOUNTED 2" ABOVE TOP OF SLAB

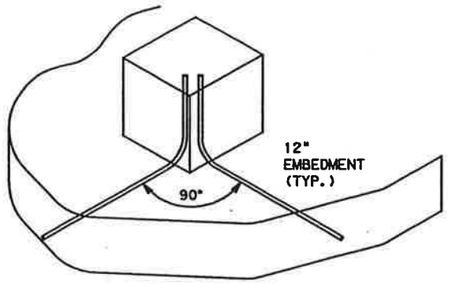

STRAIGHT DROP STILLING
BASIN BLOCK DETAIL
PERSPECTIVE VIEW
N. T. S.

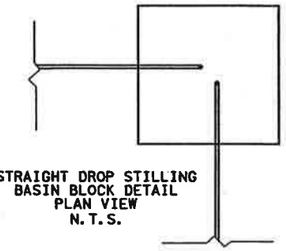

STRAIGHT DROP STILLING
BASIN BLOCK DETAIL
PLAN VIEW
N. T. S.

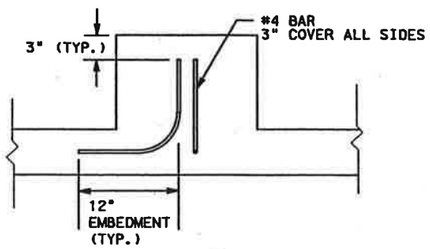

STRAIGHT DROP STILLING
BASIN BLOCK DETAIL
SECTION VIEW
N. T. S.

PLAN
ENERGY DISSIPATOR DETAIL
N. T. S.

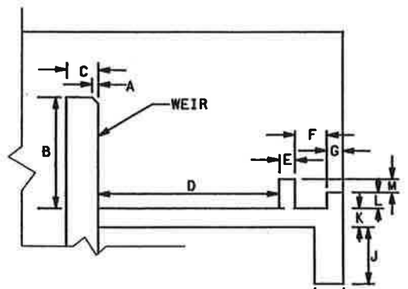

STRAIGHT DROP STILLING
BASIN DETAIL
PROFILE VIEW
N. T. S.

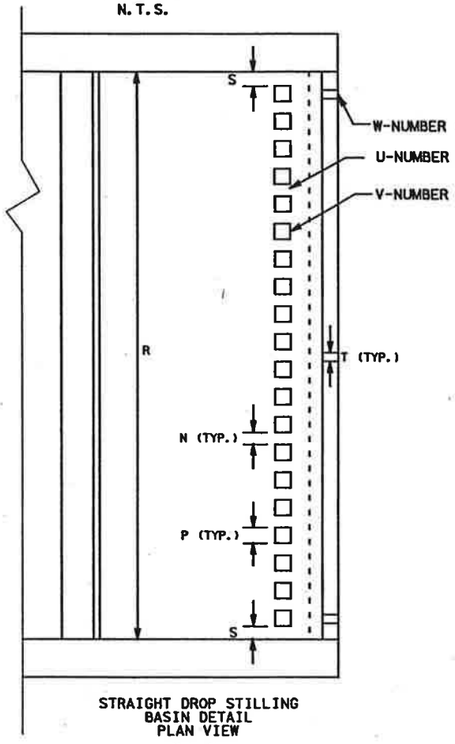

STRAIGHT DROP STILLING
BASIN DETAIL
PLAN VIEW
N. T. S.

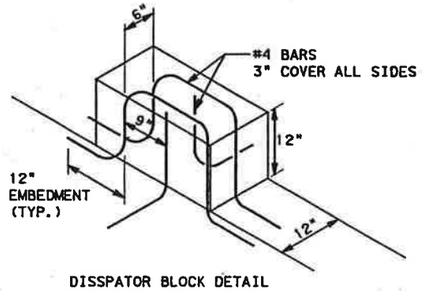

DISSPATOR BLOCK DETAIL
SHOWING REINFORCEMENT
N. T. S.

KEY NOS.	NORTH BRANCH WEIR DIMENSION TABLE (DIMENSIONS IN FEET)				
	WEST POND		EAST POND		
	NORTH WEIR	SOUTH WEIR	NORTH WEIR	SOUTH WEIR	
A	[illegible]	[illegible]	[illegible]	[illegible]	
B	5.98	5.98	2.94	5.19	
C	1.00	1.00	1.00	1.00	
D	7.60	7.60	4.59	5.59	
E	0.63	0.63	0.42	0.44	
F	1.25	1.25	0.83	0.79	
G	0.63	0.63	0.42	0.44	
H	0.75	0.75	0.75	0.75	
J	1.50	1.50	1.50	1.50	
K	0.50	0.50	0.50	0.50	
L	0.63	0.68	0.42	0.44	
M	0.40	0.40	0.35	0.33	
N	0.50	0.50	0.31	0.31	
P	0.63	0.63	0.42	0.44	
R	20.75	26.00	15.00	27.25	
S	0.50	0.31	0.35	0.26	QTY.
T	0.25	0.25	0.25	0.25	UNIT
U	17	22	19	35	EACH
V	18	23	20	36	EACH
W	3	3	3	3	EACH

STATE OF TEXAS
ANTHONY J. SCHNEIDER
71848
LICENSED
PROFESSIONAL ENGINEER

2/21/03

NORTH BRANCH WATER QUALITY POND (EAST AND WEST)

DETAILS 3

SH 45 / US 183 INTERCHANGE

SCALE: AS SHOWN

HNTB ARCHITECTS ENGINEERS PLANNERS
The HNTB Companies

Texas Department of Transportation
© 2003 TEXAS TURNPIKE AUTHORITY DIVISION

DRAWING PREPARED BY:	HNTB CORPORATION			
SHEET 14 OF 14	45WQDT03.DGN			
FED. RD. DIV. NO.	FEDERAL AID PROJECT NO.			SHEET NO.
6				677
DGN: AJS	STATE	DIST.	COUNTY	
CHK DGN: MGM	TEXAS	14	WILLIAMSON	
DWN: KZK	CONT.	SECT.	JOB	HIGHWAY NO.
CHK DWG: CAD	0683	01	069	SH 45

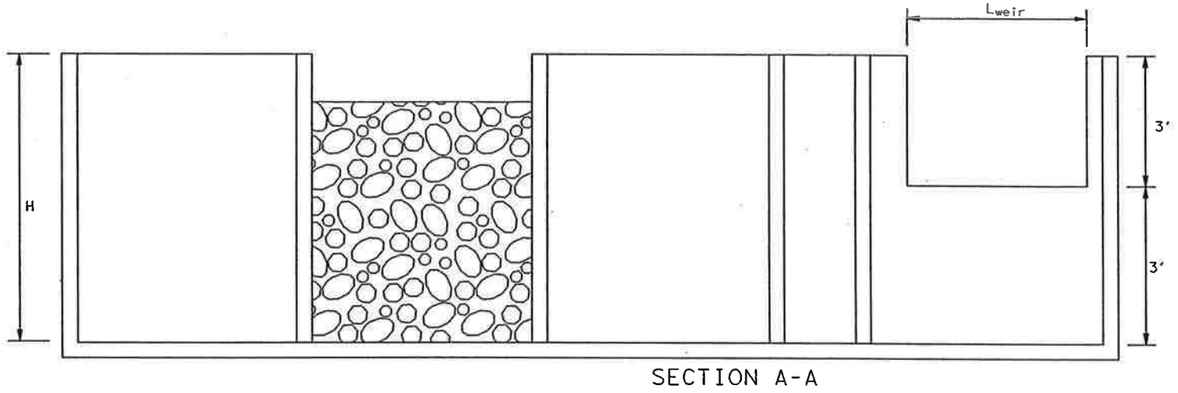

SECTION A-A

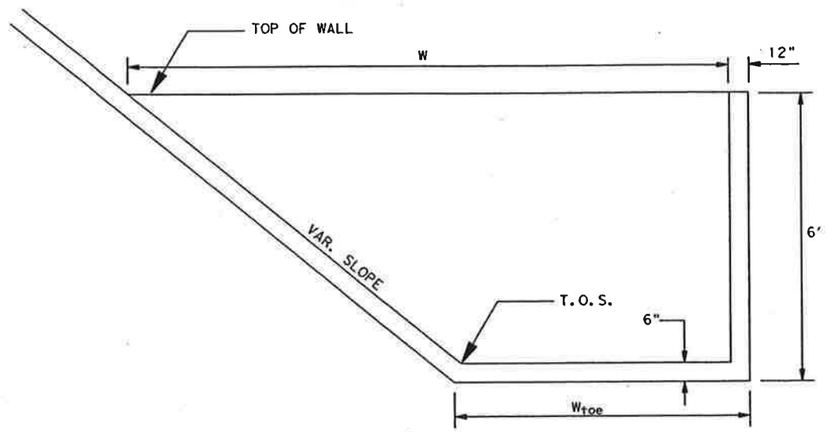

SECTION B-B

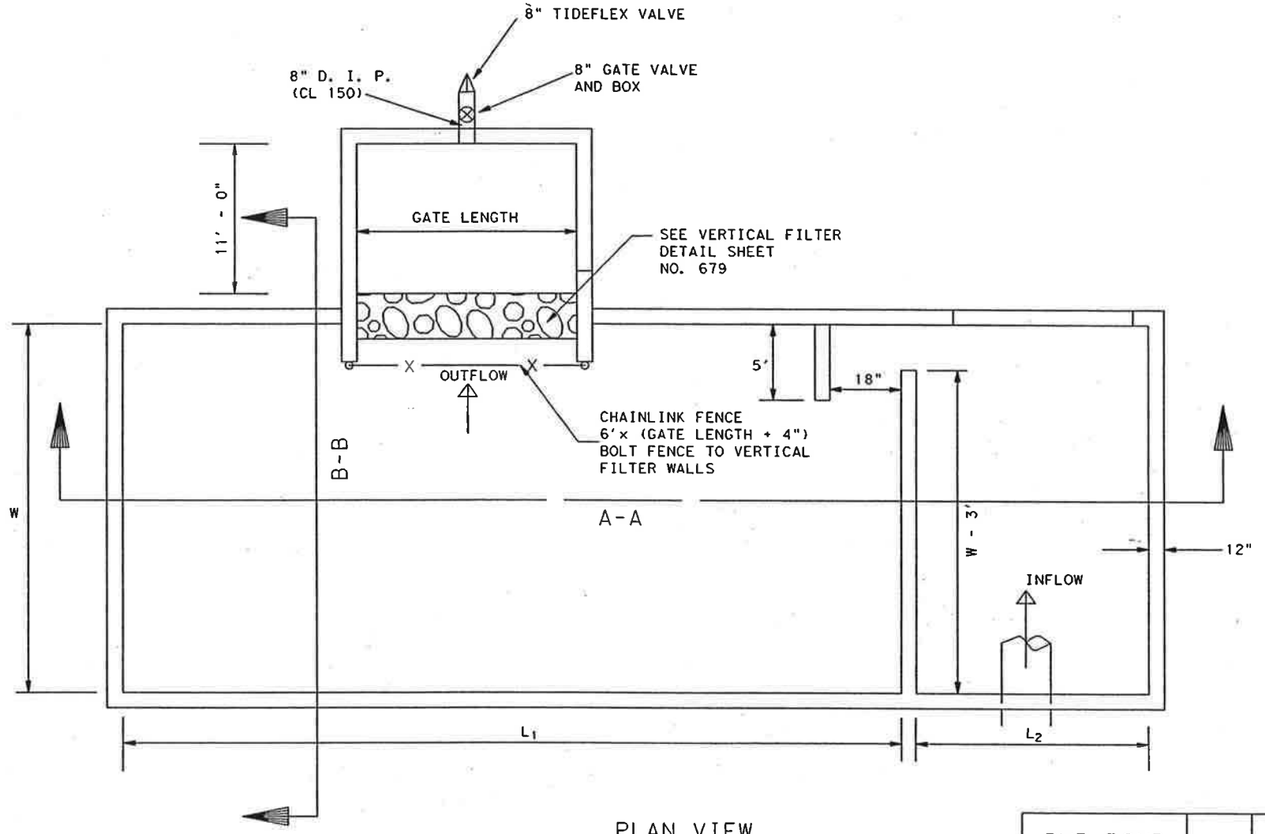

PLAN VIEW

NOTE:

REFER TO SHEET NO. 672 FOR REINFORCEMENT DETAIL.

VERTICAL FILTER SHALL BE PLACED AT THE FARTHEST DISTANCE FROM THE STORM SEWER INFLOW PIPE.

REFER TO DRAINAGE PLAN PROFILE SHEETS FOR RAMP PLACEMENT.

GRADE BOTTOM SLAB TO DRAIN @ VERTICAL FILTER.

BMP PONDS SUMMARY

BMP POND NUMBER	L1	L2	L WEIR	WIDTH (W)	(W) TOE	BOTTOM ELEV. (FT)	GATE LENGTH (FT)
E	30	6	5	27	15	920	8
F	98	6	5	24	12	919	8
G	72	6	5	22	10	918	8
L	96	6	5	55	31	888.5	10
M	96	6	5	61	37	888	10

Note: Volume = Runoff Area x (0.5/12) c.f.

STATE OF TEXAS
ANTHONY J. SCHNEIDER
71848
LICENSED
PROFESSIONAL ENGINEER

2/21/03

BMP POND DETAIL 1

SH 45 / US 183 INTERCHANGE

N.T.S.

HNTB ARCHITECTS ENGINEERS PLANNERS
The HNTB Companies

Texas Department of Transportation
© 2003 TEXAS TURNPIKE AUTHORITY DIVISION

DRAWING PREPARED BY:	HNTB CORPORATION			
SHEET 1 OF 3	BMPDETAIL1.DGN			
FED. RD. DIV. NO.	FEDERAL AID PROJECT NO.			SHEET NO.
6	MG 2002 (243)			678
DGN: BDH	STATE	DIST.	COUNTY	
CHK. DSN: AJS	TEXAS	14	WILLIAMSON	
DWN: BDH	CONT.	SECT.	JOB	HIGHWAY NO.
CHK. QTY: JEG	0683	01	069	SH 45

Scale: 40.000000:1.000000
Plotted on: 21-FEB-2003 09:16
Pen Tables: \\32058\TechprodRdwy\plotfs\32058dmg.pen
Design Filename: I:\Jobs\32058\TechprodRdwy\Dwg\Phal\Drng\bmpdetail1.dgn

Scales 40.000000:1.000000
Plotted on: 20-FEB-2003 19:25

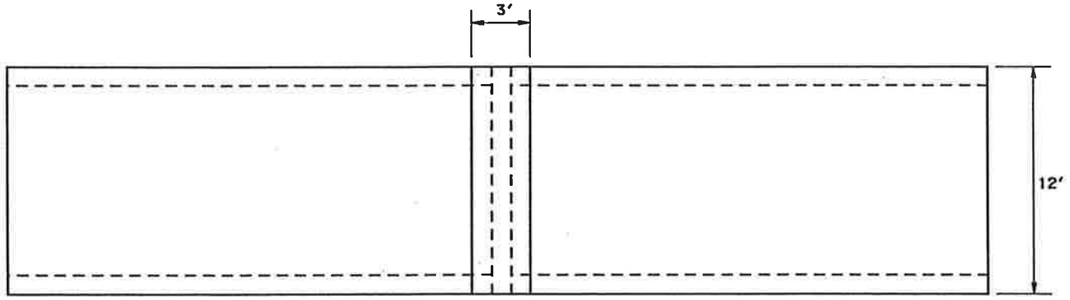

RAMP PLAN VIEW

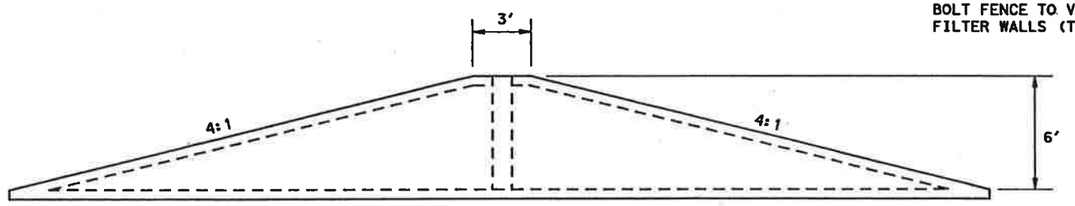

RAMP PROFILE VIEW

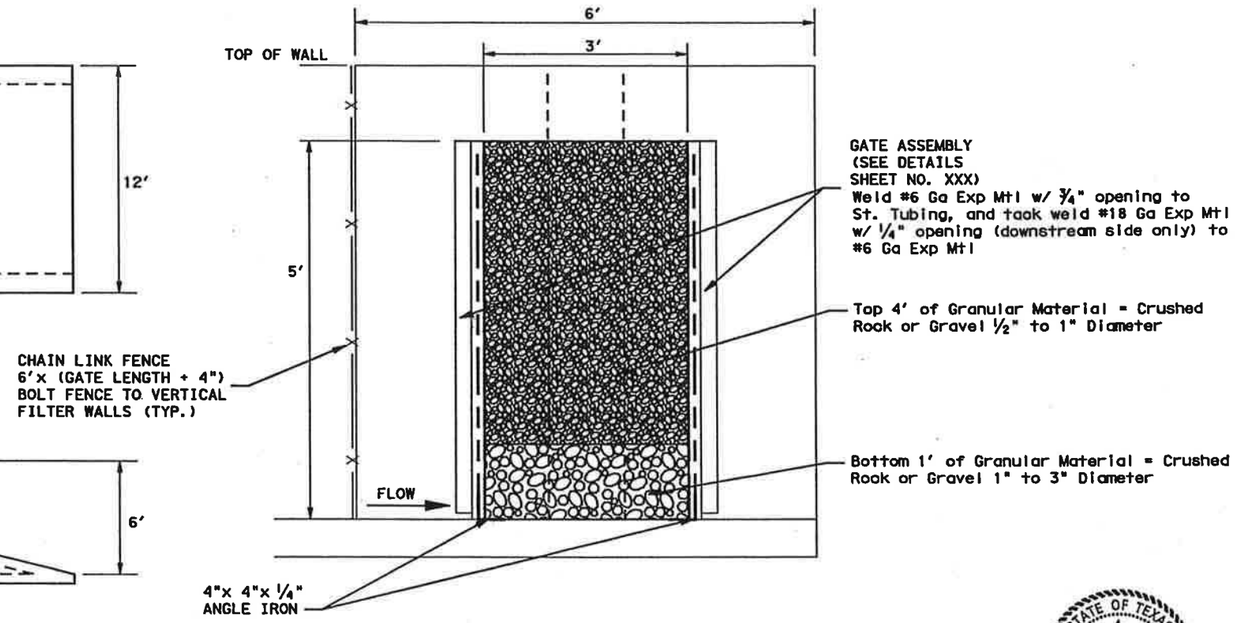

VERTICAL FILTER UNIT
BMP POND "E", "F" & "G"

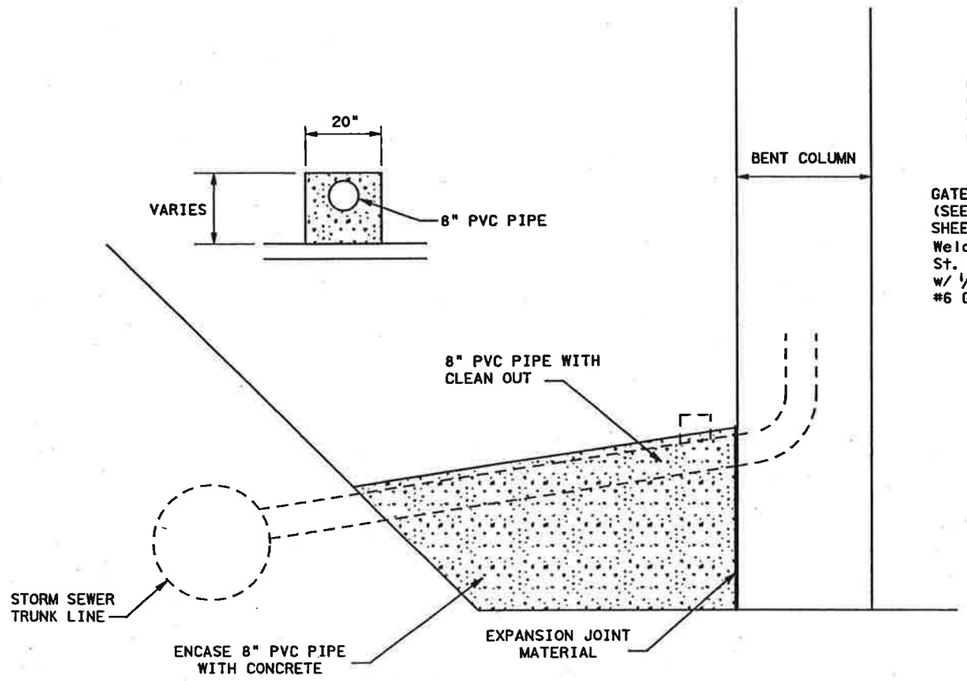

COLUMN DRAIN DETAIL

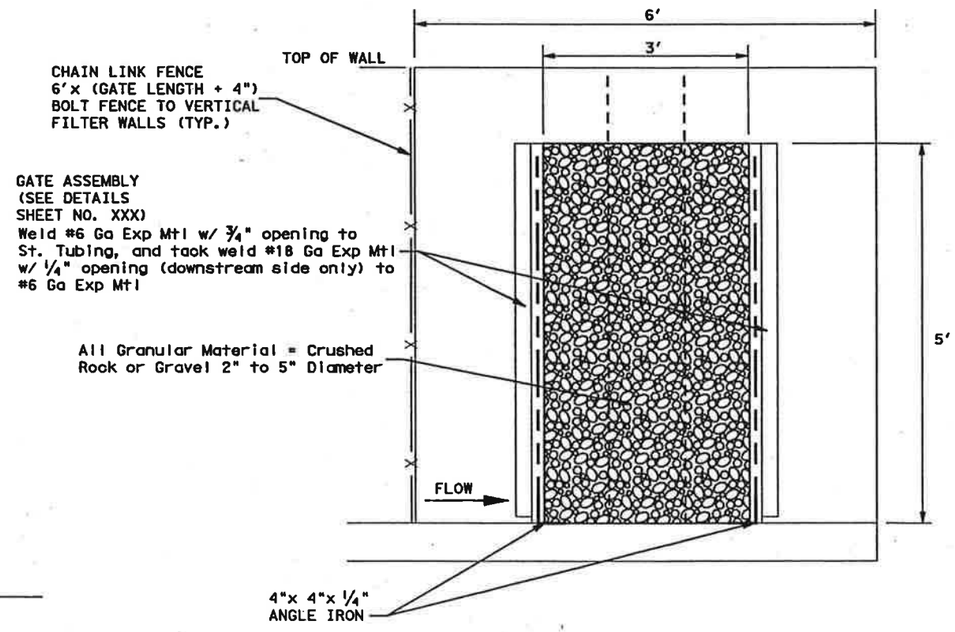

VERTICAL FILTER UNIT
BMP POND "M" & "N"

STATE OF TEXAS
ANTHONY J. SCHNEIDER
71848
LICENSED
PROFESSIONAL ENGINEER

2/21/03

BMP POND DETAIL 2

SH 45 / US 183 INTERCHANGE

N.T.S.

HNTB ARCHITECTS ENGINEERS PLANNERS
The HNTB Companies

Texas Department of Transportation
© 2003 TEXAS TURNPIKE AUTHORITY DIVISION

DRAWING PREPARED BY: HNTB CORPORATION				
SHEET 2 OF 3			BMPDETAIL2.DGN	
FED. RD. DIV. NO.	FEDERAL AID PROJECT NO.			SHEET NO.
6	MG 2002 (243)			679
DSN: AJS	STATE	DIST.	COUNTY	
CHK DSN: AJS	TEXAS	14	WILLIAMSON	
DWG: RMR	CONT.	SECT.	JOB	HIGHWAY NO.
CHK DWG: AJS	0683	01	069	SH 45

Pen Tables: I:\Jobs\32058\Teahprod\Rdwy\plots\32058drng.pen
Design Filename: I:\Jobs\32058\Teahprod\Rdwy\Dwg\Phase1\Drng\bmpdetail2.dgn

Scale: 10.000000:1.000000
Plotted on: 20-FEB-2003 19:25

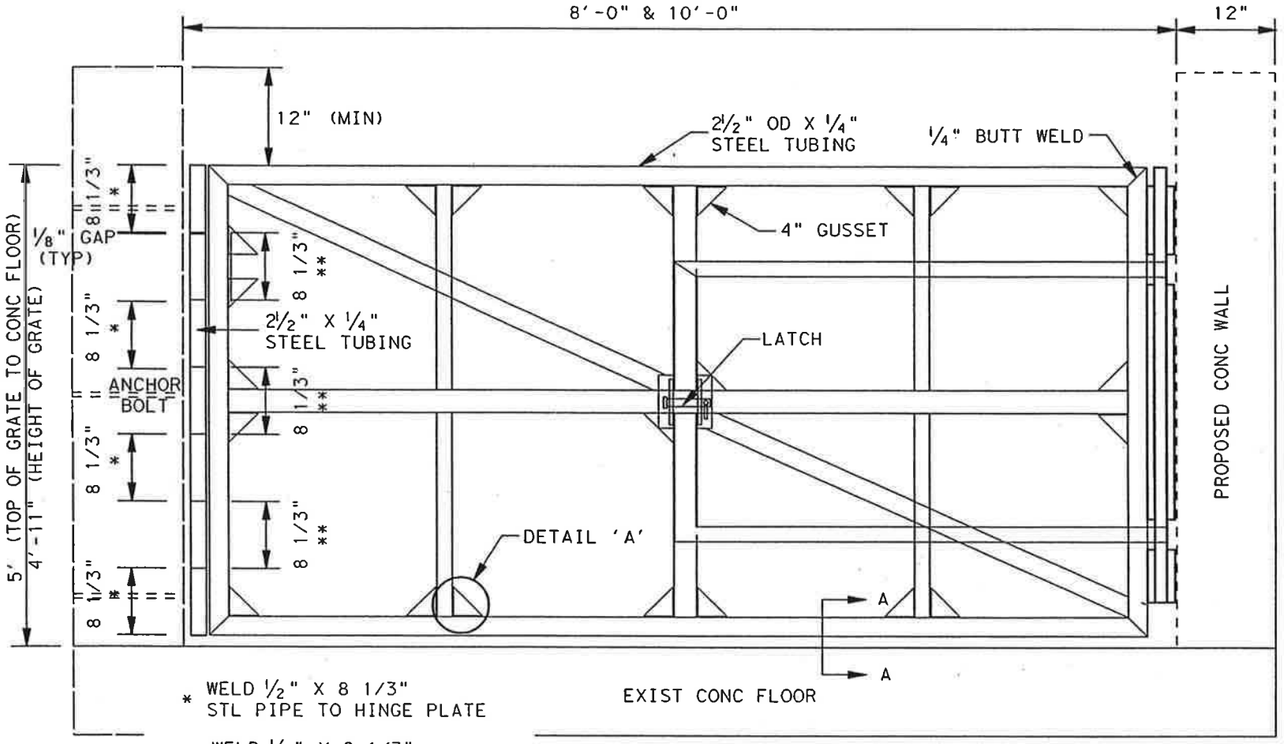

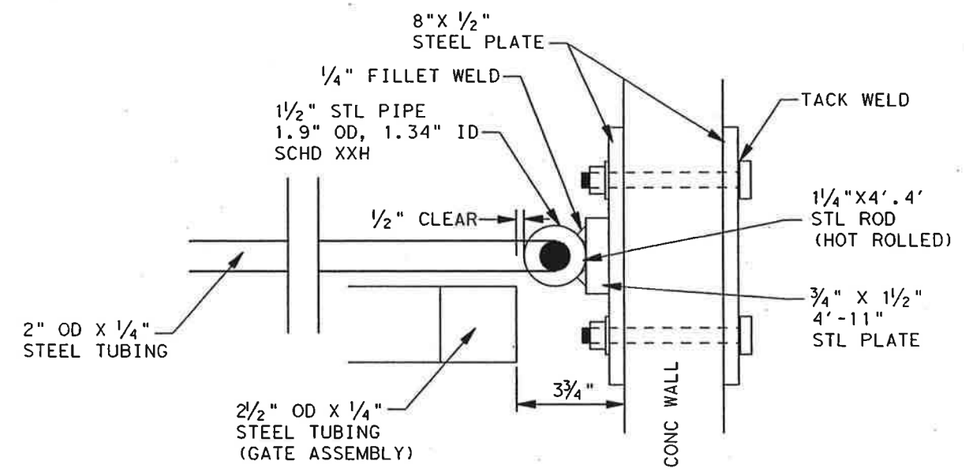

LATCH ASSEMBLY TOP VIEW

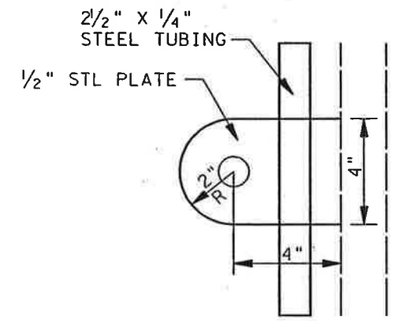

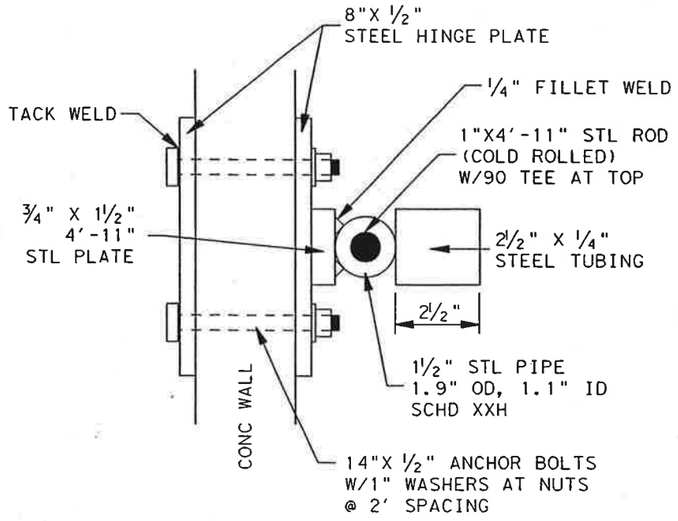

HINGE TOP VIEW

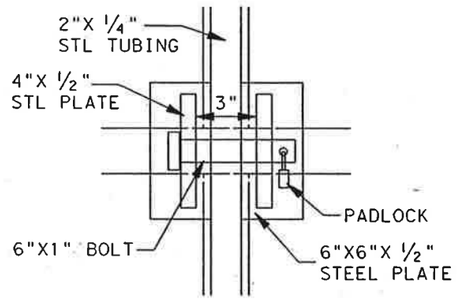

LATCH FRONT VIEW

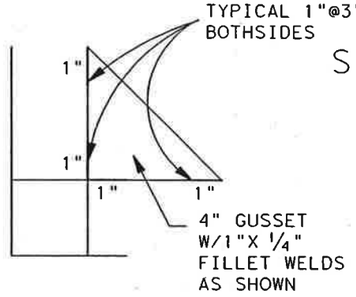

DETAIL "A"

LATCH SIDE VIEW

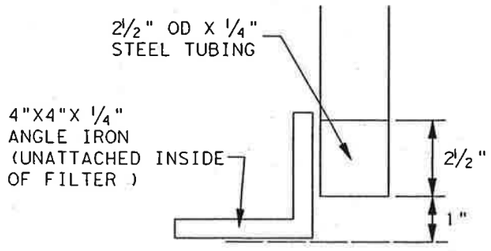

SEC A-A

NOTES

EXACT DIMENSIONS OF LENGTH & HEIGHT OF GATE TO BE VERIFIED BY THE CONTRACTOR IN THE FIELD BEFORE GATE FABRICATION.

ALL STEEL SHALL BE GALVANIZED AFTER FABRICATION IN ACCORDANCE WITH ITEM 445, GALVANIZING.

CONTRACTOR TO INSURE THAT GATE DOES NOT DRAG ON UPSTREAM SIDE. ALL STEEL TUBING SHALL CONFORM TO ASTM A500.

CONTRACTOR SHALL ADJUST VERTICAL MEMBERS SPACING FOR 8 FOOT GATE.

STATE OF TEXAS
ANTHONY J. SCHNEIDER
71848
LICENSED
PROFESSIONAL ENGINEER
2/21/03

BMP POND DETAIL 3 GATE DETAIL

SH 45 / US 183 INTERCHANGE

N.T.S.

HNTB ARCHITECTS ENGINEERS PLANNERS
The HNTB Companies

Texas Department of Transportation
© 2003 TEXAS TURNPIKE AUTHORITY DIVISION

DRAWING PREPARED BY:	HNTB CORPORATION			
SHEET 3 OF 3	BMPDETAIL3.DGN			
FED. RD. DIV. NO.	FEDERAL AID PROJECT NO.			SHEET NO.
6	MG 2002 (243)			680
DGN: AJS	STATE	DIST.	COUNTY	
CK. DGN: AJS	TEXAS	14	WILLIAMSON	
DWG: MAW	CONT.	SECT.	JOB	HIGHWAY NO.
CK. DWG: AJS	0683	01	069	SH 45

Pen Table: I:\Jobs\32058\techprod\rdwy\plots\32058drng.pen
Design Filename: I:\Jobs\32058\Techprod\Rdwy\Dwg\Phe1\Drng\bmpdetail3.dgn

Scale: 40.000003:1.000000
Plotted on: 24-FEB-2003 10:47
Pen Table is: \Jobs\32058\Techprod\rdwy\plots\32058drng.pen
Design Filename is: \Jobs\32058\Techprod\Rdwy\Dwg\Phs1\Drng\45d10801.dgn

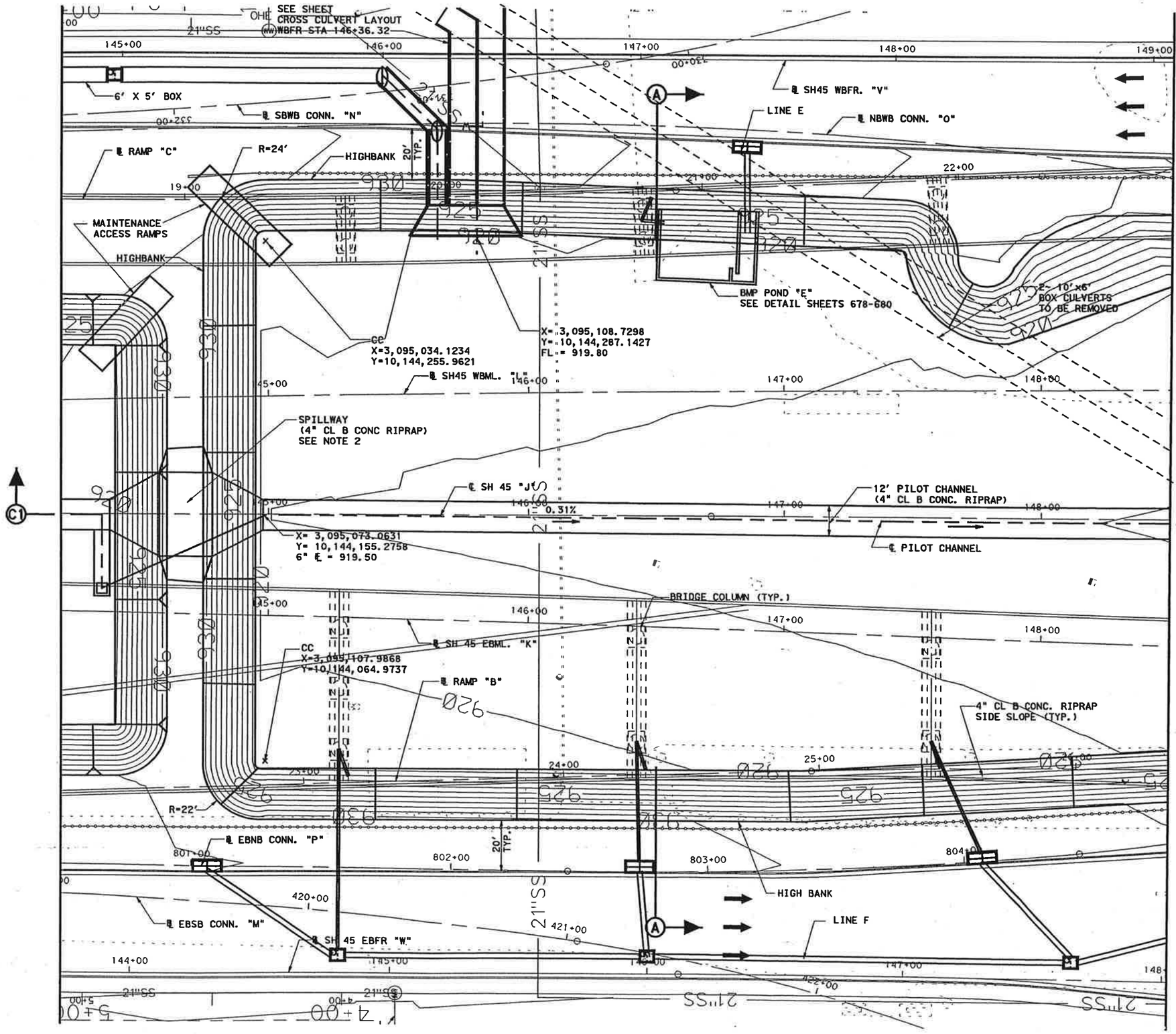

NOTES:

1. FOR SECTIONS SEE DETENTION POND SECTIONS, MAIN POND.

2. FOR SPILLWAY DETAIL SEE WATER QUALITY POND DETAILS SHEETS.

STATE OF TEXAS
ANTHONY J. SCHNEIDER
71848
LICENSED
PROFESSIONAL ENGINEER

2/24/03

DETENTION POND LAYOUT

MAIN POND

SH 45 / US 183 INTERCHANGE

SCALE:
1" = 40'

HNTB ARCHITECTS ENGINEERS PLANNERS
The HNTB Companies

Texas Department of Transportation

© 2003 TEXAS TURNPIKE AUTHORITY DIVISION

DRAWING PREPARED BY:		HNTB CORPORATION			
SHEET 1 OF 12		45d10801.dgn			
FED. DIV. NO.	FEDERAL AID PROJECT NO.				SHEET NO.
6	MG 2002 (243)				681
DGN: MRH	STATE	DIST.	COUNTY		
CHK DGN: BCS	TEXAS	14	WILLIAMSON		
DWN: HFW	CONT.	SECT.	JOB	HIGHWAY NO.	
CHK DWG: JME	0683	01	069	SH 45	

Scale: 40.000003:1.000000
Plotted on: 24-FEB-2003 10:47

MATCH LINE STA 148+50 "J"

℄ SH 45 WBFR "V"

EQUALIZATION PIPE
TO NORTH POND
SEE CROSS CULVERT LAYOUT
WBFR STA 151+11.12

℄ US183
WEST TURN AROUND
"AM"

℄ US 183
SBFR "AG"

℄ RAMP. "B"

HIGHBANK

20' TYP.

4" CL B CONC. RIPRAP
SIDE SLOPE (TYP.)

X=3,095,553.1490
Y=10,144,450.8170
E=919.00

CC
X=3,095,594.3268
Y=10,144,418.2196

BMP POND "G"
SEE DETAIL SHEETS 678-680

PI
X=3,095,637.2258
Y=10,144,370.0064
E=917.09

12' PILOT CHANNEL
(4" CL B CONC. RIPRAP)

0.31%

℄ PILOT CHANNEL

X=3,095,665.5127
Y=10,144,346.4824
E=917.00

CC
X=3,095,636.2329
Y=10,144,312.4511

BMP POND "F"
SEE DETAIL SHEETS 678-680

18" RCP E = 921.13

BRIDGE COLUMN (TYP.)

X=3,095,649.4345
Y=10,144,272.6795
E=918.00

25 L/F OF 18" RCP

HIGHBANK

℄ SH 45 EBFR "W"

EQUALIZATION PIPE
TO SOUTH POND
SEE CROSS CULVERT
LAYOUT EBFR
STA 150+30.00

SEE CROSS CULVERT
EXTENSION LAYOUT,
POND OUTLET

R=60'

LINE G

℄ SH 45 WBML "L"

℄ EBNB CONN. "R"

℄ SH 45 "J"

℄ NBNB CONN. "Q"

℄ SH 45 EBML "K"

NOTE:
FOR SECTIONS SEE DETENTION POND SECTIONS, MAIN POND.

STATE OF TEXAS
ANTHONY J. SCHNEIDER
71848
LICENSED
PROFESSIONAL ENGINEER

2/24/03

DETENTION POND LAYOUT

MAIN POND

SH 45 / US 183 INTERCHANGE

SCALE:
1" = 40'

HNTB ARCHITECTS ENGINEERS PLANNERS
The HNTB Companies

Texas Department of Transportation
© 2003 TEXAS TURNPIKE AUTHORITY DIVISION

DRAWING PREPARED BY:			HNTB CORPORATION		
SHEET 2 OF 12			45d10802.dgn		
FED. RD. DIV. NO.	FEDERAL AID PROJECT NO.			SHEET NO.	
6	MG 2002 (243)			682	
DSN: MRH	STATE	DIST.	COUNTY		
CHK DSN: BCS	TEXAS	14	WILLIAMSON		
DRG: HFW	CONT.	SECT.	JOB	HIGHWAY NO.	
CHK DRG: JME	0683	01	069	SH 45	

Pen Table: I:\Jobs\32058\Techprod\rdwy\plots\32058drng.pen
Design Filename: I:\Jobs\32058\Techprod\Rdwy\Dwg\Phe1\Drng\45d10802.dgn

Scale: 40.000003:1.000000
Plotted on: 20-FEB-2003 19:36

Pen Table: I:\jobs\32058\teahprod\rdwy\plots\32058drng.pen
Design Filename: I:\jobs\32058\Teahprod\Rdwy\Dwg\Phase1\Drng\45d10803.dgn

COORDINATE POINTS FOR NORTH DETENTION POND LAYOUT											
1	N=10144737.78 E=3095506.14	7	N=10144791.78 E=3095517.62	13	N=10144704.13 E=3095566.67	19	N=10144570.45 E=3095553.38	25	N=10144518.74 E=3095403.69	31	N=10144602.71 E=3095427.32	37	N=10144690.84 E=3095438.09
2	N=10144715.29 E=3095494.08	8	N=10144809.57 E=3095535.17	14	N=10144696.83 E=3095549.95	20	N=10144567.37 E=3095521.69	26	N=10144532.64 E=3095389.56	32	N=10144610.40 E=3095412.81	38	N=10144715.68 E=3095432.31
3	N=10144712.86 E=3095536.12	9	N=10144791.34 E=3095552.16	15	N=10144676.33 E=3095533.31	21	N=10144558.57 E=3095491.76	27	N=10144547.95 E=3095378.67	33	N=10144637.54 E=3095397.35	39	N=10144746.32 E=3095447.46
4	N=10144754.86 E=3095539.17	10	N=10144774.75 E=3095556.11	16	N=10144650.91 E=3095540.45	22	N=10144539.36 E=3095467.18	28	N=10144561.44 E=3095391.74	34	N=10144663.08 E=3095415.32	40	N=10144735.14 E=3095482.03
5	N=10144770.59 E=3095525.77	11	N=10144763.00 E=3095568.47	17	N=10144617.91 E=3095571.29	23	N=10144510.19 E=3095441.69	29	N=10144564.47 E=3095419.96	35	N=10144667.55 E=3095426.12	41	N=10144756.19 E=3095493.32
6	N=10144780.49 E=3095519.89	12	N=10144732.99 E=3095586.20	18	N=10144588.61 E=3095577.10	24	N=10144503.15 E=3095420.14	30	N=10144580.87 E=3095437.78	36	N=10144676.99 E=3095436.38		

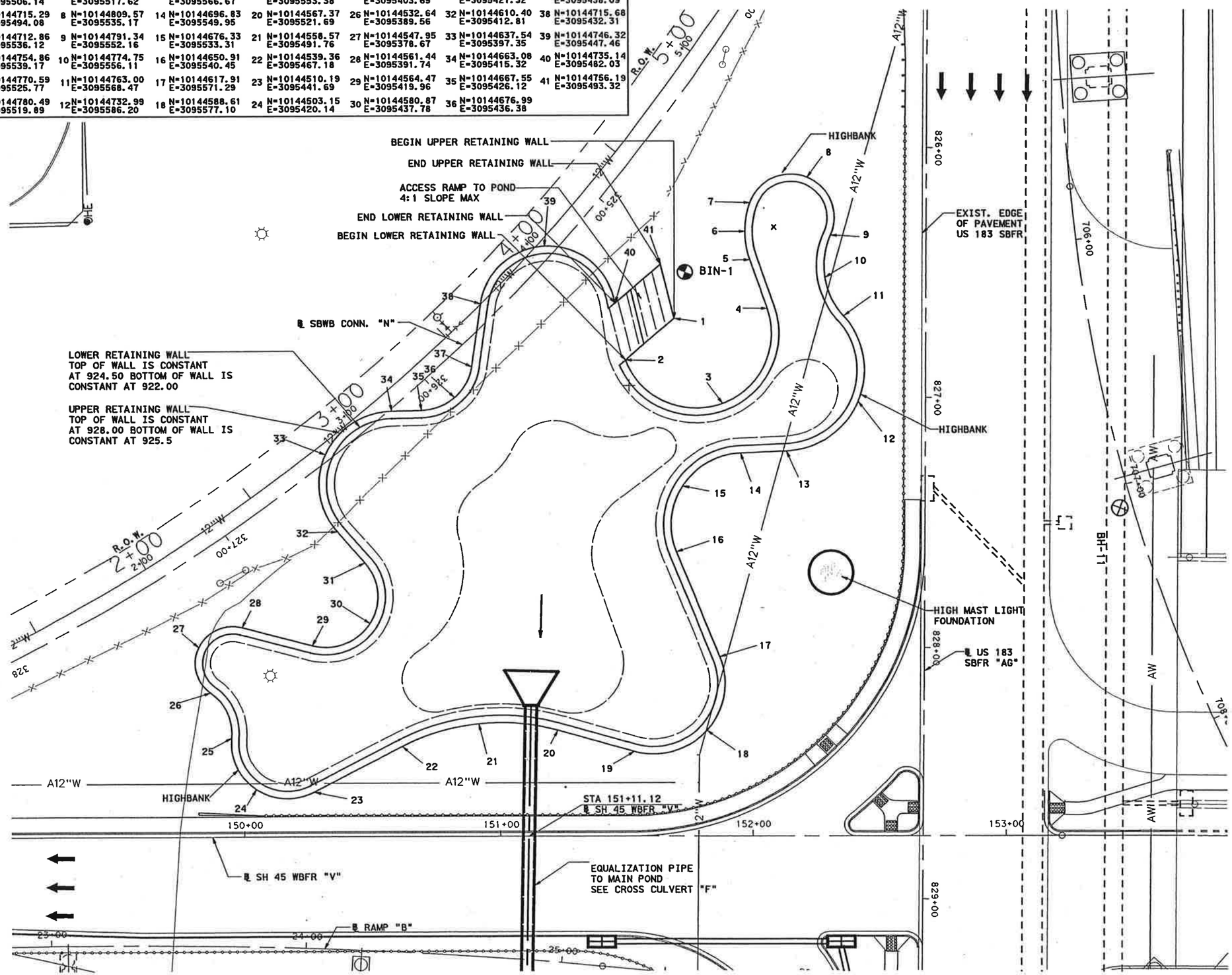

NOTES:

1. CONTRACTOR TO PROVIDE A 3:1 SLOPE FROM BOTTOM OF UPPER RETAINING WALL TO TOP OF LOWER RETAINING WALL.
2. SEE POND DETAIL SHEETS FOR RETAINING WALL CROSS SECTION.

STATE OF TEXAS
ANTHONY J. SCHNEIDER
71848
LICENSED
PROFESSIONAL ENGINEER

2/21/03

DETENTION POND LAYOUT

NORTH POND

SH 45 / US 183 INTERCHANGE

SCALE:
1" = 40'

HNTB ARCHITECTS ENGINEERS PLANNERS
The HNTB Companies

Texas Department of Transportation
© 2003 TEXAS TURNPIKE AUTHORITY DIVISION

DRAWING PREPARED BY:			HNTB CORPORATION		
SHEET 3 OF 12			45d10803.dgn		
FED. DIV. NO.	FEDERAL AID PROJECT NO.				SHEET NO.
6	MG 2002 (243)				683
DGN: CLS	STATE	DIST.	COUNTY		
CHK DGN: BN	TEXAS	14	WILLIAMSON		
DWN: HKA	CONT.	SECT.	JOB	HIGHWAY NO.	
CHK DWG: AJS	0683	01	069	SH 45	

Scale: 40.000003:1.000000
Plotted on: 20-FEB-2003 19:26

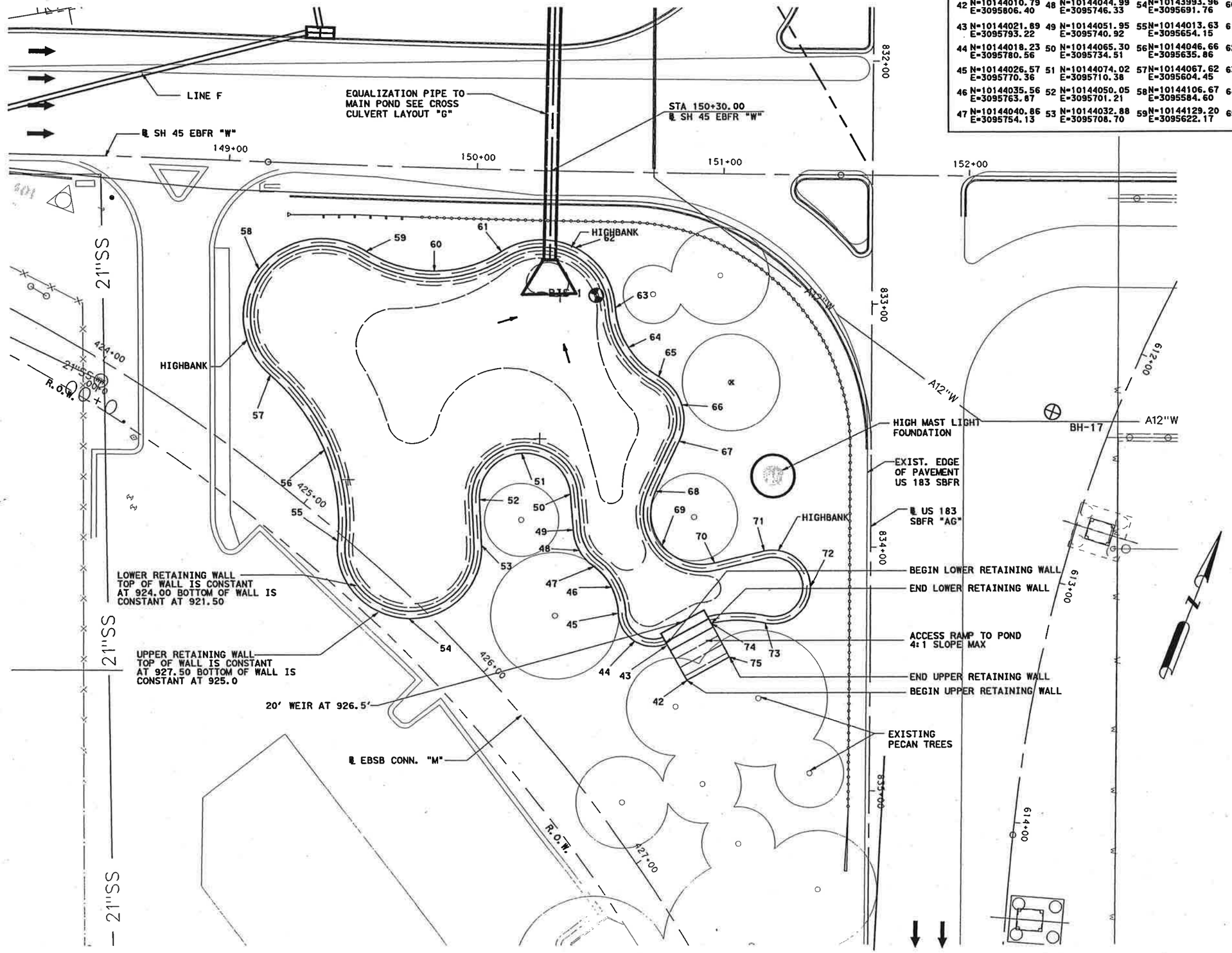

COORDINATE POINTS FOR SOUTH DETENTION POND LAYOUT													
42	N=10144010.79 E=3095806.40	48	N=10144044.99 E=3095746.33	54	N=10143993.96 E=3095691.76	60	N=10144131.42 E=3095650.53	66	N=10144115.85 E=3095763.82	72	N=10144064.91 E=3095839.55
43	N=10144021.89 E=3095793.22	49	N=10144051.95 E=3095740.92	55	N=10144013.63 E=3095654.15	61	N=10144148.75 E=3095673.08	67	N=10144101.51 E=3095768.24	73	N=10144044.26 E=3095827.71
44	N=10144018.23 E=3095780.56	50	N=10144065.30 E=3095734.51	56	N=10144046.66 E=3095635.86	62	N=10144160.90 E=3095700.21	68	N=10144078.79 E=3095766.57	74	N=10144036.24 E=3095807.24
45	N=10144026.57 E=3095770.36	51	N=10144074.02 E=3095710.38	57	N=10144067.62 E=3095604.45	63	N=10144143.54 E=3095724.33	69	N=10144058.95 E=3095777.13	75	N=10144026.08 E=3095819.29
46	N=10144035.56 E=3095763.87	52	N=10144050.05 E=3095701.21	58	N=10144106.67 E=3095584.60	64	N=10144130.11 E=3095735.04	70	N=10144059.91 E=3095799.58		
47	N=10144040.86 E=3095754.13	53	N=10144032.88 E=3095708.70	59	N=10144129.20 E=3095622.17	65	N=10144123.39 E=3095750.85	71	N=10144071.80 E=3095816.77		

NOTES:

1. CONTRACTOR TO PROVIDE A 3:1 SLOPE FROM BOTTOM OF UPPER RETAINING WALL TO TOP OF LOWER RETAINING WALL.
2. SEE POND DETAIL SHEETS FOR RETAINING WALL CROSS SECTION AND TREE PROTECTION.

STATE OF TEXAS
ANTHONY J. SCHNEIDER
71848
LICENSED
PROFESSIONAL ENGINEER

2/21/03

DETENTION POND LAYOUT

SOUTH POND

SH 45 / US 183 INTERCHANGE

SCALE:
1" = 40'

HNTB ARCHITECTS ENGINEERS PLANNERS
The HNTB Companies

Texas Department of Transportation
© 2003 TEXAS TURNPIKE AUTHORITY DIVISION

DRAWING PREPARED BY:	HNTB CORPORATION			
SHEET 4 OF 12	45d10804.dgn			
FED. RD. DIV. NO.	FEDERAL AID PROJECT NO.			SHEET NO.
6	MG 2002 (243)			684
DSGN. CLS	STATE	DIST.	COUNTY	
CHK. DSGN. BN	TEXAS	14	WILLIAMSON	
DWN. HKA	CONT.	SECT.	JOB	HIGHWAY NO.
CHK. DWG. AJS	0683	01	069	SH 45

Pen Table: I:\dgn\32058\teahprod\rdwy\plots\32058drng.pen
Design Filename: I:\Jobs\32058\Teahprod\Rdwy\Dwg\Phs1\Drng\45d10804.dgn

Scale: 100.000000:1.000000
Plotted on: 20-FEB-2003 19:27

Pen Table: I:\Jobs\32058\teahprod\rdwy\plots\32058drng.pen
Design Filename: I:\Jobs\32058\Teahprod\Rdwy\Dwg\Phs1\Drng\45dl0812.dgn

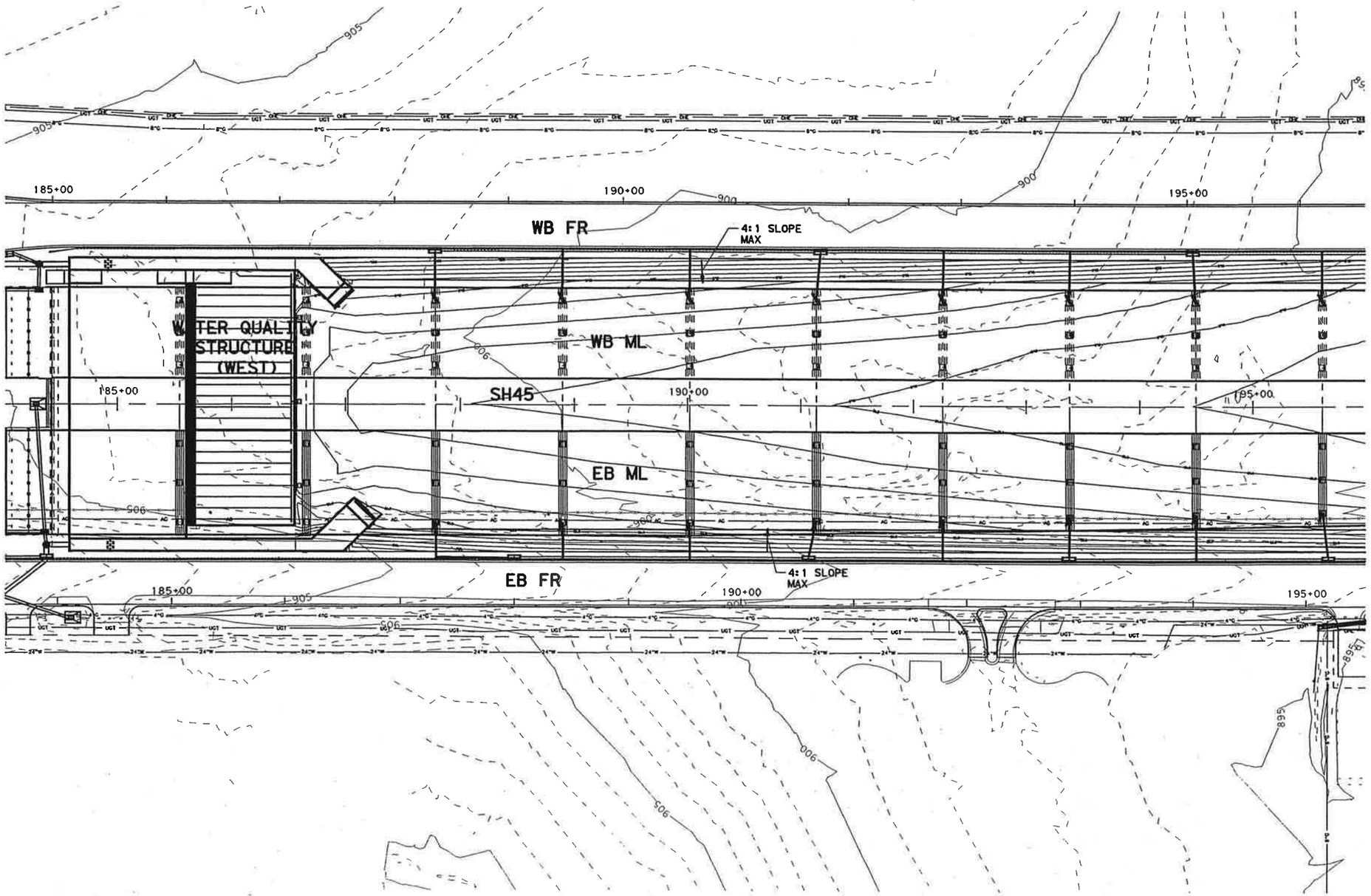

LEGEND:

- - -897- - - EXISTING CONTOURS
——894—— PROPOSED CONTOURS
PROPOSED TYPE S INLET
BRIDGE STRUCTURES

STATE OF TEXAS
ANTHONY J. SCHNEIDER
71848
LICENSED PROFESSIONAL ENGINEER

2/21/03

DETENTION POND LAYOUT PLAN

SH 45
STA. 184+00 TO STA. 196+00

SH 45 / US 183 INTERCHANGE

SCALE: 1"=100'

HNTB ARCHITECTS ENGINEERS PLANNERS
The HNTB Companies

Texas Department of Transportation
© 2003 TEXAS TURNPIKE AUTHORITY DIVISION

DRAWING PREPARED BY:			HNTB CORPORATION	
SHEET 5 OF 12			45DL0812.DGN	
FED. RD. DIV. NO.	FEDERAL AID PROJECT NO.			SHEET NO.
6	MO 2002 (243)			685
DSGN HKA	STATE	DIST.	COUNTY	
CHK AJS	TEXAS	14	WILLIAMSON	
DWN HKA	CONT.	SECT.	JOB	HIGHWAY NO.
CHK AJS	0683	01	069	SH 45

Scale: 100.000030:1.000000
Plotted on: 24-FEB-2003 10:51

Pen Table: I:\Jobs\32058\Teahprod\rdwy\plots\32058drng.pen
Design Filename: I:\Jobs\32058\Teahprod\Rdwy\Dwg\Phe1\Drng\45dl0813.dgn

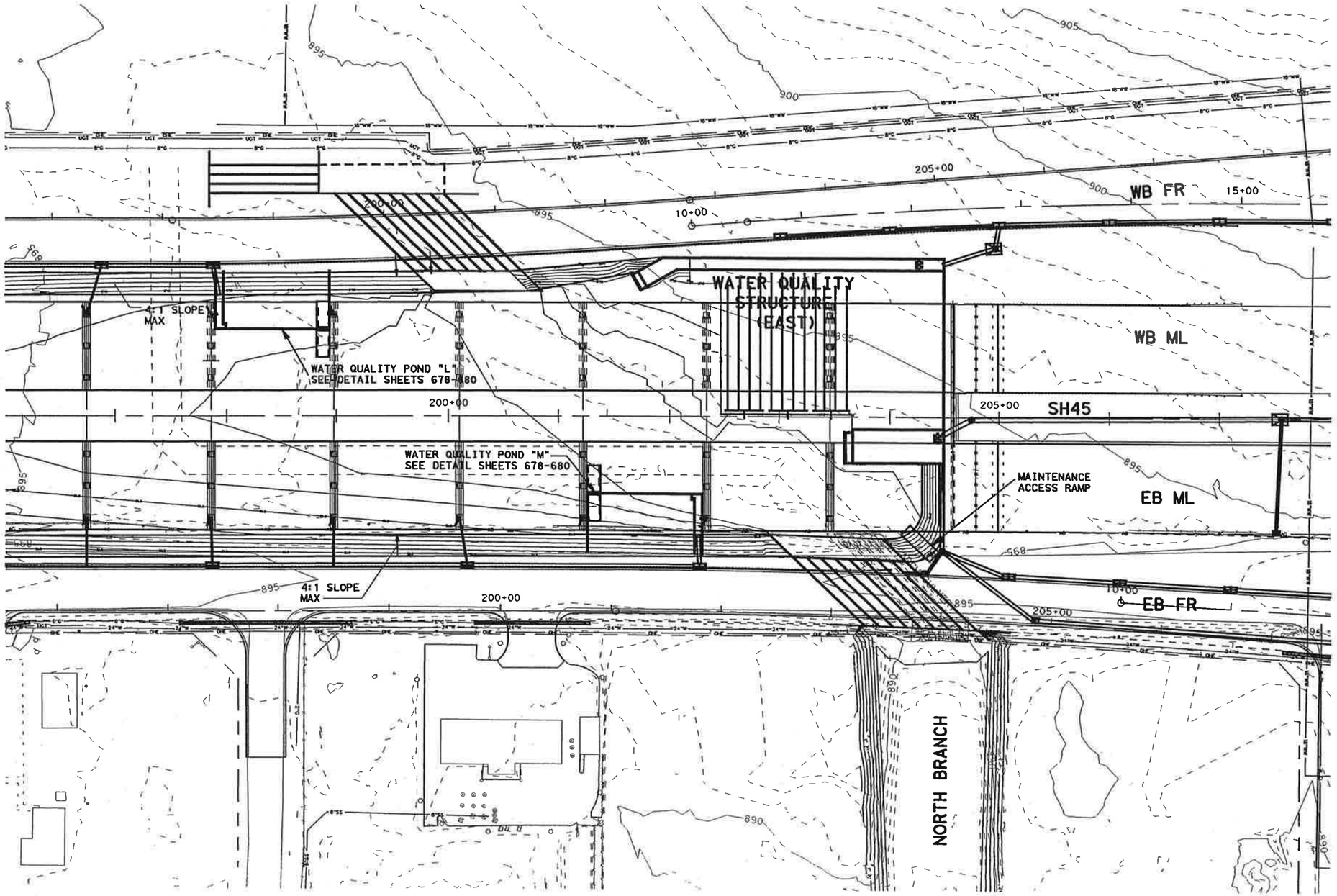

LEGEND:

- - -897- - - PROPOSED CONTOURS

894 PROPOSED BRIDGE DECK DRAIN

BRIDGE STRUCTURES

STATE OF TEXAS
ANTHONY J. SCHNEIDER
71848
LICENSED PROFESSIONAL ENGINEER

2/24/03

DETENTION POND LAYOUT PLAN

SH 45
STA. 196+00 TO STA. 208+00

SH 45 / US 183 INTERCHANGE

SCALE: 1":100'

HNTB ARCHITECTS ENGINEERS PLANNERS
The HNTB Companies

Texas Department of Transportation
© 2003 TEXAS TURNPIKE AUTHORITY DIVISION

DRAWING PREPARED BY:	HNTB CORPORATION			
SHEET 6 OF 12	45DL0813.DGN			
FED. RD. DIV. NO.	FEDERAL AID PROJECT NO.			SHEET NO.
6	MG 2002 (243)			686
DGN: HKA	STATE	DIST.	COUNTY	
CHK DGN: AJS	TEXAS	14	WILLIAMSON	
DWG: HKA	CONT.	SECT.	JOB	HIGHWAY NO.
CHK DWG: AJS	0683	01	069	SH 45

Scale: 100.000000:1.000000
Plotted on: 24-FEB-2003 13:36

MAIN POND
STAGE/STORAGE/DISCHARGE

	STORAGE					
STAGE	MAIN POND	NORTH POND	SOUTH POND	TOTAL	TOTAL	DISCHARGE
(FT)	(CY)	(CY)	(CY)	(CY)	(ACRE-FT)	(CFS)
917.0	0	0	0	0	0	0.00
917.5	45.944	0	0	45.944	0.03	6.58
918.0	394.318	0	0	394.318	0.24	13.16
918.5	1226.979	0	0	1226.979	0.76	19.74
919.0	2502.515	0	0	2502.515	1.55	26.32
919.5	4236.534	0	10.848	4247.382	2.63	32.90
920.0	6311.851	0	57.042	6368.893	3.95	39.48
920.5	8589.399	173.052	219.008	8981.459	5.57	46.05
921.0	10955.966	461.458	489.522	11906.946	7.38	263.19
921.5	13360.188	864.207	781.068	15005.463	9.30	324.04
922.0	15797.392	1276.749	1076.885	18151.026	11.25	371.68
922.5	18267.677	1701.229	1377.424	21346.33	13.23	420.49
923.0	20771.172	2138.106	1683.41	24592.688	15.24	470.01
923.5	23307.988	2587.482	1996.042	27891.512	17.29	521.55
924.0	25878.277	3049.476	2317.336	31245.089	19.37	572.78
924.5	28483.784	3524.191	2647.433	34655.408	21.48	625.74
925.0	31131.166	4009.415	2984.005	38124.586	23.63	677.68
925.5	33825.686	4502.845	3327.025	41655.556	25.82	720.09
926.0	36571.526	5004.517	3676.546	45252.589	28.05	765.37
926.5	39376.546	5514.442	4032.736	48923.724	30.32	835.29
927.0	42250.727	6032.662	4395.9	52679.289	32.65	971.54
927.5	45209.757	6559.177	4766.43	56535.364	35.04	1062.35
928.0	48466.702	7094.016	4766.43	60327.148	37.39	1139.14

Q WEIR	Q TOTAL
(CFS)	(CFS)
23.55	835.29
66.60	971.54
122.35	1062.35
188.37	1139.14

ROUTING TABLE

DESIGN EVENT	Q peak	*Qpeak/routed	MAX WSE IN POND (FT.)
10-YR	843.97	642.72	924.67
25-YR	1038.20	768.26	926.07
50-YR	1168.00	883.30	926.84
100-YR	1306.80	946.14	927.48

* Routing using HEC-HMS

NOTE:

HYDROLOGY BASED ON CITY OF AUSTIN WATERSHED PROTECTION DEPARTMENT "FLOOD STUDY OF UPPER LAKE CREEK WATERSHED", (R.J. BRANDES, 1998). UPSTREAM BASIN ID "LCM13" WAS ROUTED THROUGH PROPOSED DETENTION POND USING HEC-HMS.

HEC-HMS VARIABLES FOR REFERENCE STUDY ARE AS FOLLOWS:

BASIN ID: LCM13
DA: 0.4370 SQ MI
RCN: 95
SCS LAG: 34.44 MIN
METHOD: SCS CURVE NO.
PRECIPITATION: CITY OF AUSTIN, 3-HOUR STORM

STATE OF TEXAS
ANTHONY J. SCHNEIDER
71848
LICENSED PROFESSIONAL ENGINEER

2/24/03

HYDRAULIC DATA SHEET
MAIN DETENTION POND

SH 45 / US 183 INTERCHANGE

HNTB ARCHITECTS ENGINEERS PLANNERS
The HNTB Companies

Texas Department of Transportation
© 2003 TEXAS TURNPIKE AUTHORITY DIVISION

DRAWING PREPARED BY:	HNTB CORPORATION			
SHEET 7 of 12		45DY08MP01.dgn		
FED. RD. DIV. NO.	FEDERAL AID PROJECT NO.			SHEET NO.
6	MG 2002 (243)			687
DSGN: HKA	STATE	DIST.	COUNTY	
CHK DSGN: AJS	TEXAS	14	WILLIAMSON	
DWN: BDH	CONT.	SECT.	JOB	HIGHWAY NO.
CHK DWG: AJS	0683	01	069	SH 45

Pen Table: I:\Jobs\32058\Techprod\Rdwy\plots\32058drng.pen
Design Filename: I:\Jobs\32058\Techprod\Rdwy\Dwg\Phs1\Drng\45dy08MP01.dgn

Scale: 100.000000:1.000000
Plotted on: 24-FEB-2003 13:36

Pen Table: I:\Jobs\32058\techprod\rdwy\plots\32058drng.pen
Design Filename: I:\Jobs\32058\Techprod\Rdwy\Dwg\Phase1\Drng\45dy08NB01.dgn

NORTH BRANCH POND
STAGE/STORAGE/DISCHARGE

STAGE (FT)	STORAGE (ACRE-FT)	DISCHARGE (CFS)
886.0	0.000	0
886.1	0.002	0.00
886.2	0.003	3.57
886.4	0.011	10.71
886.6	0.022	17.86
886.8	0.063	25.00
887.0	0.165	32.14
887.2	0.363	39.29
887.4	0.681	46.43
887.5	0.897	50.00
887.6	1.113	60.00
887.8	1.658	70.00
888.0	2.320	80.00
888.2	3.093	90.00
888.4	3.964	100.00
888.6	4.918	150.00
888.8	5.944	200.00
889.0	7.030	298.82
889.2	8.175	397.65
889.4	9.361	496.47
889.6	10.584	595.29
889.8	11.843	694.12
890.0	13.137	792.94
890.2	14.463	891.76
890.4	15.820	990.59
890.5	16.514	1040.00
890.6	17.207	1114.00
890.8	18.623	1262.00
891.0	20.067	1410.00
891.2	21.538	1558.00
891.4	23.035	1706.00
891.6	24.557	1854.00
891.8	26.104	2002.00
891.9	26.889	2110.00
892.0	27.674	2110.94
892.2	29.268	2112.81
892.4	30.884	2114.69
892.6	32.521	2116.56
892.8	34.180	2118.44
893.0	35.860	2120.31
893.2	37.560	2122.19
893.4	39.279	2124.06
893.5	40.149	2125.00
893.6	41.018	2166.00
893.8	42.774	2248.00

STAGE (FT)	STORAGE (ACRE-FT)	DISCHARGE (CFS)
894.0	44.549	2330.00
894.2	46.342	2412.00
894.4	48.150	2494.00
894.6	49.974	2578.24
894.8	51.812	2662.47
895.0	53.664	2746.71
895.2	55.528	2830.94
895.4	57.406	2915.18
895.6	59.296	2999.41
895.8	61.197	3083.65
896.0	63.108	3167.88

NOTE:

HYDROLOGY BASED ON CITY OF AUSTIN WATERSHED PROTECTION DEPARTMENT "FLOOD STUDY OF UPPER LAKE CREEK WATERSHED", (R.J. BRANDES, 1998). UPSTREAM BASIN ID'S "NBW4", "NBW3", AND "NBW2" WERE ADJUSTED TO FIT PROPOSED CONDITIONS AND ROUTED THROUGH PROPOSED DETENTION POND USING HEC-HMS.

HEC-HMS VARIABLES FOR EXISTING REFERENCE STUDY ARE AS FOLLOWS:

BASIN ID: NBW4
DA: 0.4649 SQ MI
RCN: 86
SCS LAG: 19.08 MIN
METHOD: SCS CURVE NO.
PRECIPITATION: CITY OF AUSTIN, 3-HOUR STORM

BASIN ID: NBW3
DA: 0.2769 SQ MI
RCN: 86
SCS LAG: 21.48 MIN
METHOD: SCS CURVE NO.
PRECIPITATION: CITY OF AUSTIN, 3-HOUR STORM

BASIN ID: NBW2
DA: 0.1324 SQ MI
RCN: 86
SCS LAG: 11.70 MIN
METHOD: SCS CURVE NO.
PRECIPITATION: CITY OF AUSTIN, 3-HOUR STORM

HEC-HMS VARIABLES FOR PROPOSED REFERENCE STUDY ARE AS FOLLOWS:

BASIN ID: NBW4
DA: 0.3236 SQ MI
RCN: 86
SCS LAG: 19.08 MIN
METHOD: SCS CURVE NO.
PRECIPITATION: CITY OF AUSTIN, 3-HOUR STORM

BASIN ID: NBW3
DA: 0.3427 SQ MI
RCN: 86
SCS LAG: 21.48 MIN
METHOD: SCS CURVE NO.
PRECIPITATION: CITY OF AUSTIN, 3-HOUR STORM

BASIN ID: NBW3A
DA: 0.0723 SQ MI
RCN: 86
SCS LAG: 15.3 MIN
METHOD: SCS CURVE NO.
PRECIPITATION: CITY OF AUSTIN, 3-HOUR STORM

BASIN ID: NBW2
DA: 0.1324 SQ MI
RCN: 95
SCS LAG: 15.00 MIN
METHOD: SCS CURVE NO.
PRECIPITATION: CITY OF AUSTIN, 3-HOUR STORM

ROUTING TABLE

DESIGN EVENT	Q peak	*Qpeak/routed
10-YR	1754.10	1607.30
25-YR	2235.50	2051.40
50-YR	2570.10	2117.30
100-YR	2921.80	2266.20

* Routing using HEC-HMS

STATE OF TEXAS
ANTHONY J. SCHNEIDER
71848
LICENSED
PROFESSIONAL ENGINEER

2/24/03

HYDRAULIC DATA SHEET
NORTH BRANCH
DETENTION POND

SH 45 / US 183 INTERCHANGE

HNTB ARCHITECTS ENGINEERS PLANNERS
The HNTB Companies

Texas Department of Transportation
© 2003 TEXAS TURNPIKE AUTHORITY DIVISION

DRAWING PREPARED BY:	HNTB CORPORATION			
SHEET 8 of 12	45DY08NB01.dgn			
FED. RD. DIV. NO.	FEDERAL AID PROJECT NO.			SHEET NO.
6	MG 2002 (243)			688
DSGN: HKA	STATE	DIST.	COUNTY	
CHK DSGN: AJS	TEXAS	14	WILLIAMSON	
DWN: BDH	CONT.	SECT.	JOB	HIGHWAY NO.
CHK DWG: AJS	0683	01	069	SH 45

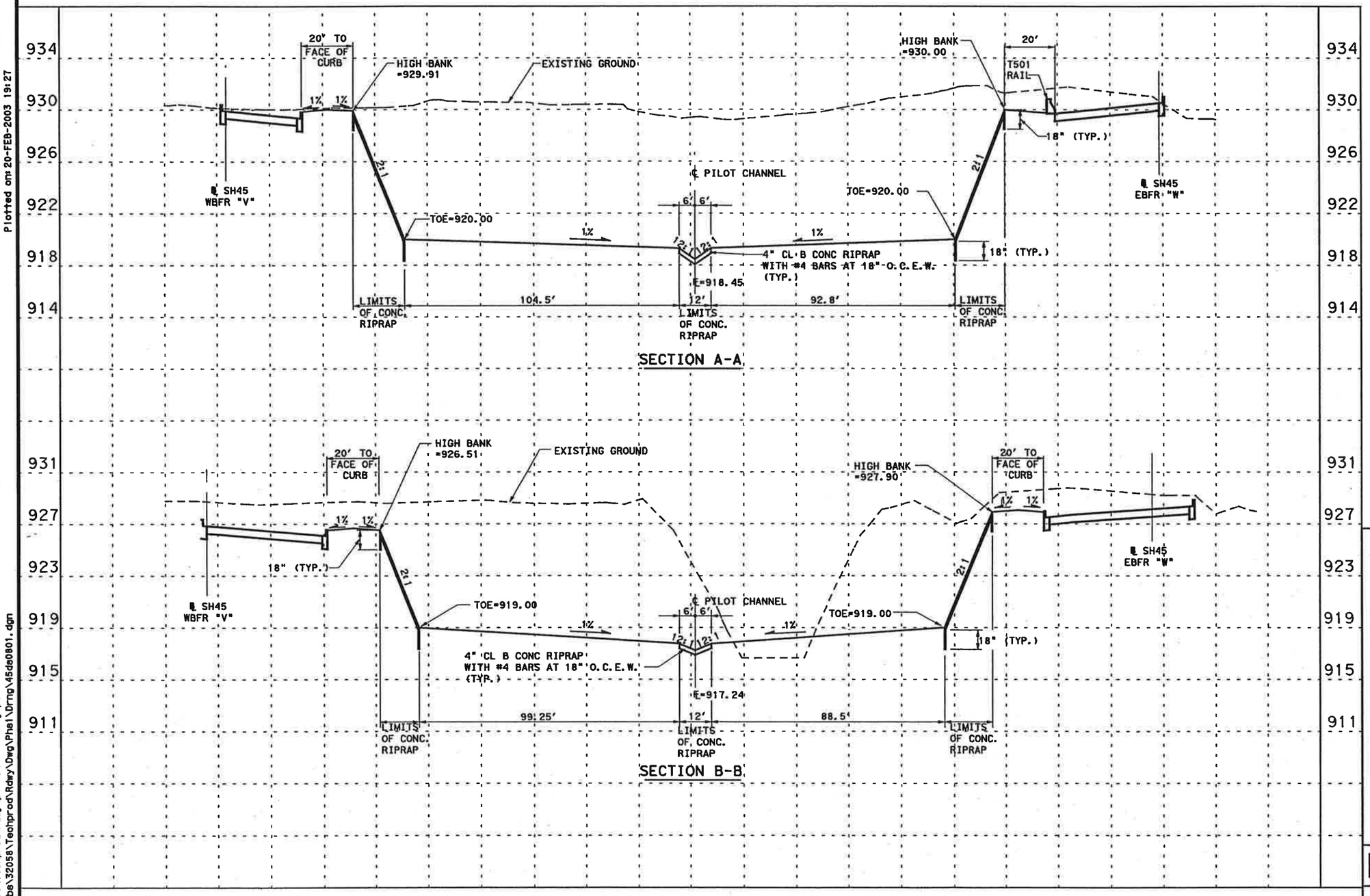

STATE OF TEXAS
ANTHONY J. SCHNEIDER
71848
LICENSED
PROFESSIONAL ENGINEER

2/21/03

DETENTION POND SECTIONS

MAIN POND

SH 45 / US 183 INTERCHANGE

SCALE:
HORIZONTAL 1" = 40'
VERTICAL 1" = 8'

HNTB ARCHITECTS ENGINEERS PLANNERS
The HNTB Companies

Texas Department of Transportation
© 2003 TEXAS TURNPIKE AUTHORITY DIVISION

DRAWING PREPARED BY:	HNTB CORPORATION				
SHEET 9 OF 12	45ds0801.dgn				
FED. RD. DIV. NO.	FEDERAL AID PROJECT NO.				SHEET NO.
6	MG 2002 (243)				689
DGN: MRH	STATE	DIST.	COUNTY		
CHK DGN: BCS	TEXAS	14	WILLIAMSON		
DWG: HFW	CONT.	SECT.	JOB	HIGHWAY NO.	
CHK DWG: JME	0683	01	069	SH 45	

Scale: 40.000003:1.000000
Plotted on: 20-FEB-2003 19:27

Pen Table: I:\Jobs\32058\techprod\rdwy\plots\32058drng.pen
Design Filename: I:\Jobs\32058\Techprod\Rdwy\Dwg\Phsl\Drng\45ds0801.dgn

Scale= 40.000003:1.000000
Plotted on: 20-FEB-2003 19:27

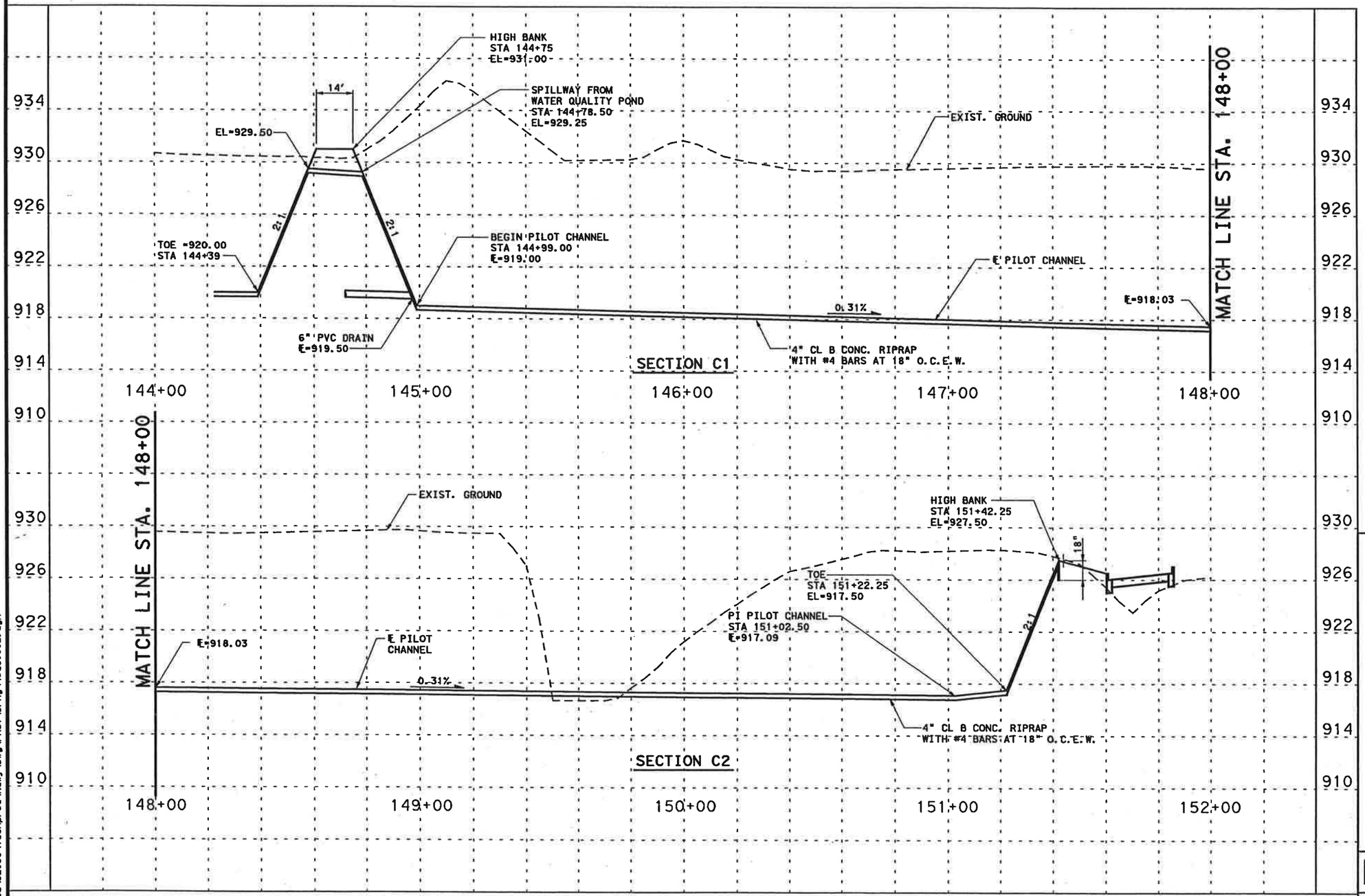

Pen Tables: V:\...\32058\Techprod\rdwy\plots\32058drng.pen
Design Filename: I:\Jobs\32058\Techprod\Rdwy\Dwg\Phs1\Drng\45ds0802.dgn

STATE OF TEXAS
ANTHONY J. SCHNEIDER
71848
LICENSED
PROFESSIONAL ENGINEER

2/21/03

DETENTION POND SECTIONS

MAIN POND

SH 45 / US 183 INTERCHANGE

SCALE:
HORIZONTAL 1" = 40'
VERTICAL 1" = 8'

HNTB ARCHITECTS ENGINEERS PLANNERS
The HNTB Companies

Texas Department of Transportation

© 2003 TEXAS TURNPIKE AUTHORITY DIVISION

DRAWING PREPARED BY:	HNTB CORPORATION			
SHEET 10 OF 12	45ds0802.dgn			
FED. RD. DIV. NO.	FEDERAL AID PROJECT NO.			SHEET NO.
6	MG 2002 (243)			690
DSN. MRH	STATE	DIST.	COUNTY	
CHK. DSN. BCS	TEXAS	14	WILLIAMSON	
DRN. HFW	CONT.	SECT.	JOB	HIGHWAY NO.
CHK. DRG. JME	0683	01	069	SH 45

Scale: 40.000000:1.000000
Plotted on: 20-FEB-2003 19:36

Pen Table: I:\...\32058\teohprod\rdwy\plots\32058dmg.pen
Design Filename: I:\Jobs\32058\Teohprod\Rdwy\Dwg\Phs1\Drng\45de0803.dgn

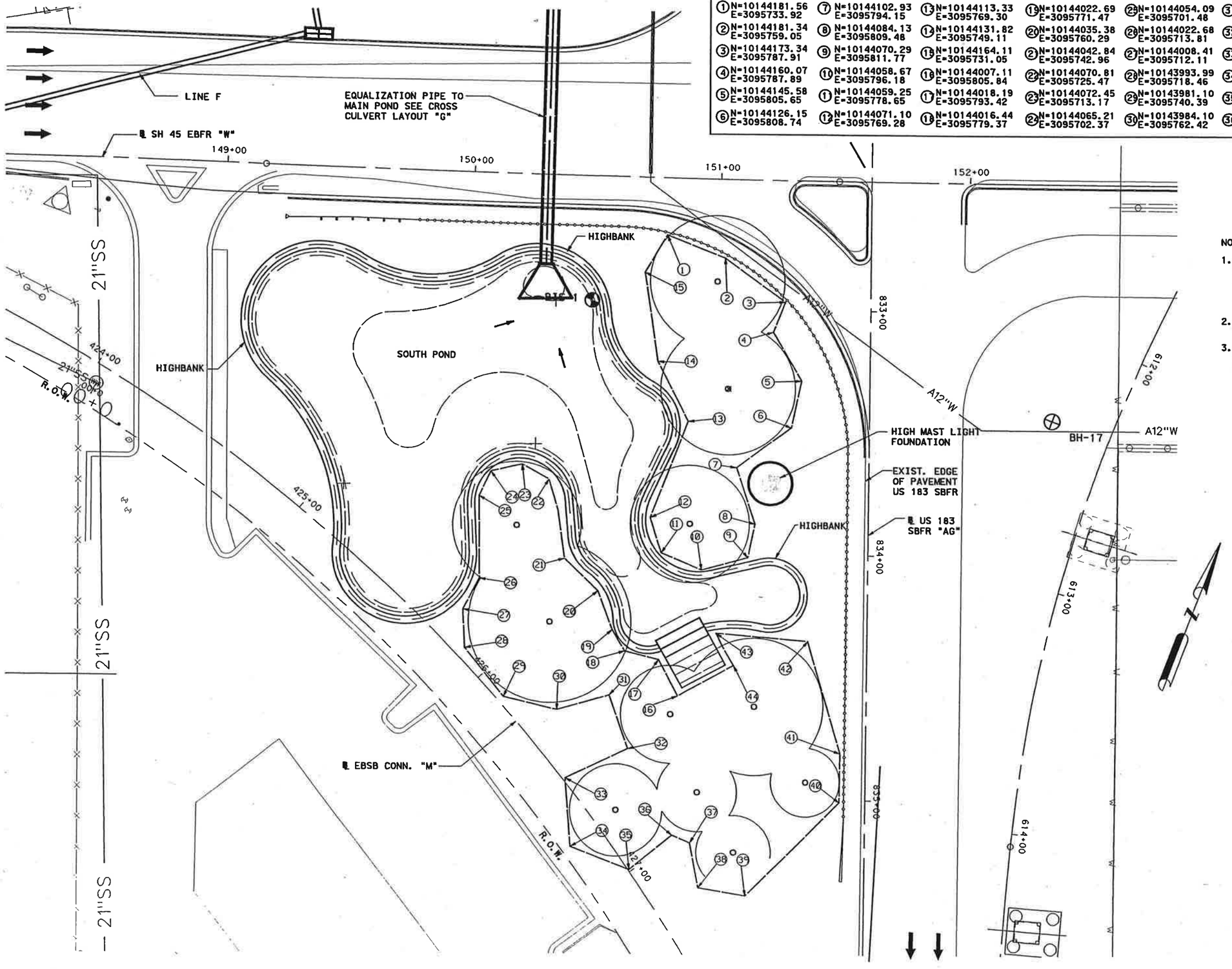

COORDINATE POINTS FOR TREE PROTECTION FENCE AT SOUTH POND

① N=10144181.56 E=3095733.92	⑦ N=10144102.93 E=3095794.15	⑬ N=10144113.33 E=3095769.30	⑲ N=10144022.69 E=3095771.47	㉕ N=10144054.09 E=3095701.48	㉛ N=10143997.42 E=3095779.96	㉗ N=10143953.24 E=3095832.17	㊸ N=10144036.74 E=3095810.92	
② N=10144181.34 E=3095759.05	⑧ N=10144084.13 E=3095809.48	⑭ N=10144131.82 E=3095749.11	⑳ N=10144035.38 E=3095760.29	㉖ N=10144022.68 E=3095713.81	㉜ N=10143979.76 E=3095795.03	㉘ N=10143937.49 E=3095841.94	㊹ N=10144027.04 E=3095822.31	
③ N=10144173.34 E=3095787.91	⑨ N=10144070.29 E=3095811.77	⑮ N=10144164.11 E=3095731.05	㉑ N=10144042.84 E=3095742.96	㉗ N=10144008.41 E=3095712.11	㉝ N=10143959.38 E=3095775.66	㉙ N=10143941.42 E=3095860.67		
④ N=10144160.07 E=3095787.89	⑩ N=10144058.67 E=3095796.18	⑯ N=10144007.11 E=3095805.84	㉒ N=10144070.81 E=3095725.47	㉘ N=10143993.99 E=3095718.46	㉞ N=10143934.17 E=3095787.62	㊵ N=10143990.74 E=3095882.47		
⑤ N=10144145.58 E=3095805.65	⑪ N=10144059.25 E=3095778.65	⑰ N=10144018.19 E=3095793.42	㉓ N=10144072.45 E=3095713.17	㉙ N=10143981.10 E=3095740.39	㉟ N=10143934.19 E=3095813.39	㊶ N=10144009.45 E=3095875.60		
⑥ N=10144126.15 E=3095808.74	⑫ N=10144071.10 E=3095769.28	⑱ N=10144016.44 E=3095779.37	㉔ N=10144065.21 E=3095702.37	㉚ N=10143984.10 E=3095762.42	㊱ N=10143953.69 E=3095823.13	㊷ N=10144047.23 E=3095846.63		

NOTES:

1. CONTRACTOR TO PROVIDE TREE PROTECTION FENCE FOR ALL EXISTING TREES. IF THERE ARE EXISTING TREES THAT ARE NOT SHOWN AND NOT IN EXCAVATED AREA IT IS THE CONTRACTORS RESPONSIBILITY TO PROVIDE TREE PROTECTION FENCING.
2. SEE UTILITY STANDARDS FOR TREE PROTECTION DETAILS AND GENERAL NOTES.
3. CONTRACTOR TO HAND DIG TREE PROTECTION FENCE POSTS IF FENCE POST OCCUR WITHIN DRIP LINE OF TREE TYP.

STATE OF TEXAS
ANTHONY J. SCHNEIDER
71848
LICENSED
PROFESSIONAL ENGINEER

2/21/03

DETENTION POND DETAILS

SOUTH POND TREE PROTECTION

SH 45 / US 183 INTERCHANGE

SCALE:
1" = 40'

HNTB ARCHITECTS ENGINEERS PLANNERS
The HNTB Companies

Texas Department of Transportation
© 2003 TEXAS TURNPIKE AUTHORITY DIVISION

DRAWING PREPARED BY:			HNTB CORPORATION	
SHEET 11 OF 12			45de0803.dgn	
FED. RD. DIV. NO.	FEDERAL AID PROJECT NO.			SHEET NO.
6	MG 2002 (243)			691
DGN: CLS	STATE	DIST.	COUNTY	
CHK. DSN: BN	TEXAS	14	WILLIAMSON	
DWN: HKA	CONT.	SECT.	JOB	HIGHWAY NO.
CHK. DET: AJS	0683	01	069	SH 45

Scale: 40.000003:1.000000
Plotted on: 20-FEB-2003 19:31

LIMESTONE RIPRAP:

1. Stone riprap as defined in Item 0432 of the Standard TxDOT specification manual dry type "F" shall be referred to as limestone riprap.
2. All limestone for the project shall have: a thickness between 6" to 12", a width between 12" and 24", and a depth between 24" to 36". Stone not within sizes noted shall be rejected.
3. The color of the limestone shall be selected by the Engineer from samples submitted by the Contractor.
4. The courses of the stone shall be level following consistent elevations, not following the slope of the surface plane.
5. Positive drainage will be necessary and accomplished by the Contractor.
6. All areas that are to receive limestone rip rap shall have filter fabric under stone. Filter fabric is to be subsidiary to installation of limestone and not paid for directly. Filter fabric is to be ASTM-4751

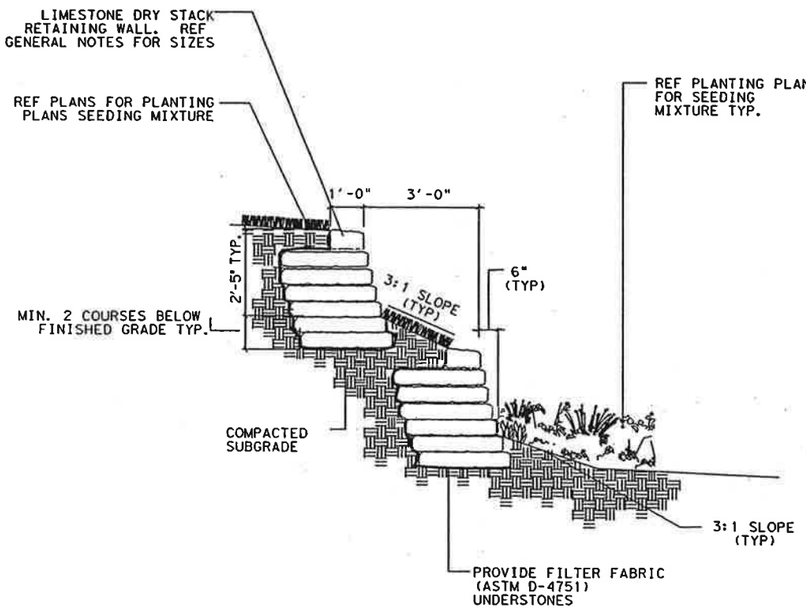

DETENTION POND RETAINING WALL DETAIL

NOTE:

1. CONTRACTOR TO STAKE LOCATION OF WALLS FOR APPROVAL PRIOR TO INSTALLATION
2. CONTRACTOR TO SUBMITT ROCK SAMPLES TO ENGINEER FOR APPROVAL OF COLOR PRIOR TO INSTALLATION.
3. CONTRACTOR TO NOTIFY ENGINEER IF THERE ARE ANY DISCREPANCIES IN THE SITE CONDITION FROM WHAT IS SHOWN ON PLANS

STATE OF TEXAS
ANTHONY J. SCHNEIDER
71848
LICENSED
PROFESSIONAL ENGINEER

2/21/03

DETENTION POND DETAILS

NORTH AND SOUTH PONDS

SH 45 / US 183 INTERCHANGE

SCALE:
1" = 4'

HNTB ARCHITECTS ENGINEERS PLANNERS
The HNTB Companies

Texas Department of Transportation
© 2003 TEXAS TURNPIKE AUTHORITY DIVISION

DRAWING PREPARED BY:	HNTB CORPORATION			
SHEET 12 OF 12	45da0804.dgn			
FED. RD. DIV. NO.	FEDERAL AID PROJECT NO.			SHEET NO.
6	MG 2002 (243)			692
DGN: CLS	STATE	DIST.	COUNTY	
CHK. DSN: BN	TEXAS	14	WILLIAMSON	
DWN: HKA	CONT.	SECT.	JOB	HIGHWAY NO.
CHK. DRCT: AJS	0683	01	069	SH 45

Pen Table: I:\...\32058\teohprod\rdwy\plots\32058drng.pen
Design Filename: I:\Jobs\32058\Teohprod\Rdwy\Dwg\Phs1\Drng\45da0804.dgn

Scale: 200.000000:1.000000
Plotted on: 17-FEB-2003 12:20

Pen Table: \Jobs\32058\techprod\rdwy\plots\320580.pen
Design Filename: \\sanw00\pmwork\Jobs\32058\TECHPROD\Util\WPAP\dwgs\wpapcv07.dgn

COUNTY _____ PROJ. NO. _____
HWY. NO. _____ LETTING DATE _____
DATE ACCEPTED _____

LETTING DATE:	FED. RD. DIV. NO.	FEDERAL AID PROJECT NO.			SHEET NO.
WORK BEGAN:	6	MG 2002(243)			1
DATE ACCEPTED:	STATE	STATE DIST. NO.	COUNTY		
CONTRACTOR:	TEXAS	14	WILLIAMSON		
TOTAL COST:	CONT.	SECT.	JOB	HIGHWAY NO.	
	683	01	069	SH 45	

STATE OF TEXAS
DEPARTMENT OF TRANSPORTATION

PLANS OF PROPOSED
STATE HIGHWAY IMPROVEMENTS

FEDERAL-AID PROJECT
SH 45
WILLIAMSON COUNTY
PROJECT NO. MG 2002(243)

DESIGN SPEEDS	
MAIN LANES	70 MPH
FRONTAGE ROADS/CONNECTOR RAMPS	40 MPH
RAMPS	45 MPH

AREA OF DISTURBED SOIL = 238 ACRES

CONTROL CSJ = 0683-01-069
NET LENGTH OF ROADWAY = 8517.54 FT = 1.623 MI
NET LENGTH OF BRIDGE = 4642.25 FT = 0.884 MI
NET LENGTH OF PROJECT = 13159.79 FT = 2.507 MI

LIMITS: FROM RIDGELINE TO WEST OF PARMER LANE.

FOR THE CONSTRUCTION OF AN INTERCHANGE FACILITY.
CONSISTING OF GRADING, DRAINAGE, STRUCTURES, PAVEMENT, RETAINING WALLS, SIGNING, STRIPING, AND TRAFFIC SIGNALS.

WPAP CHAPTER 7 ATTACHMENT

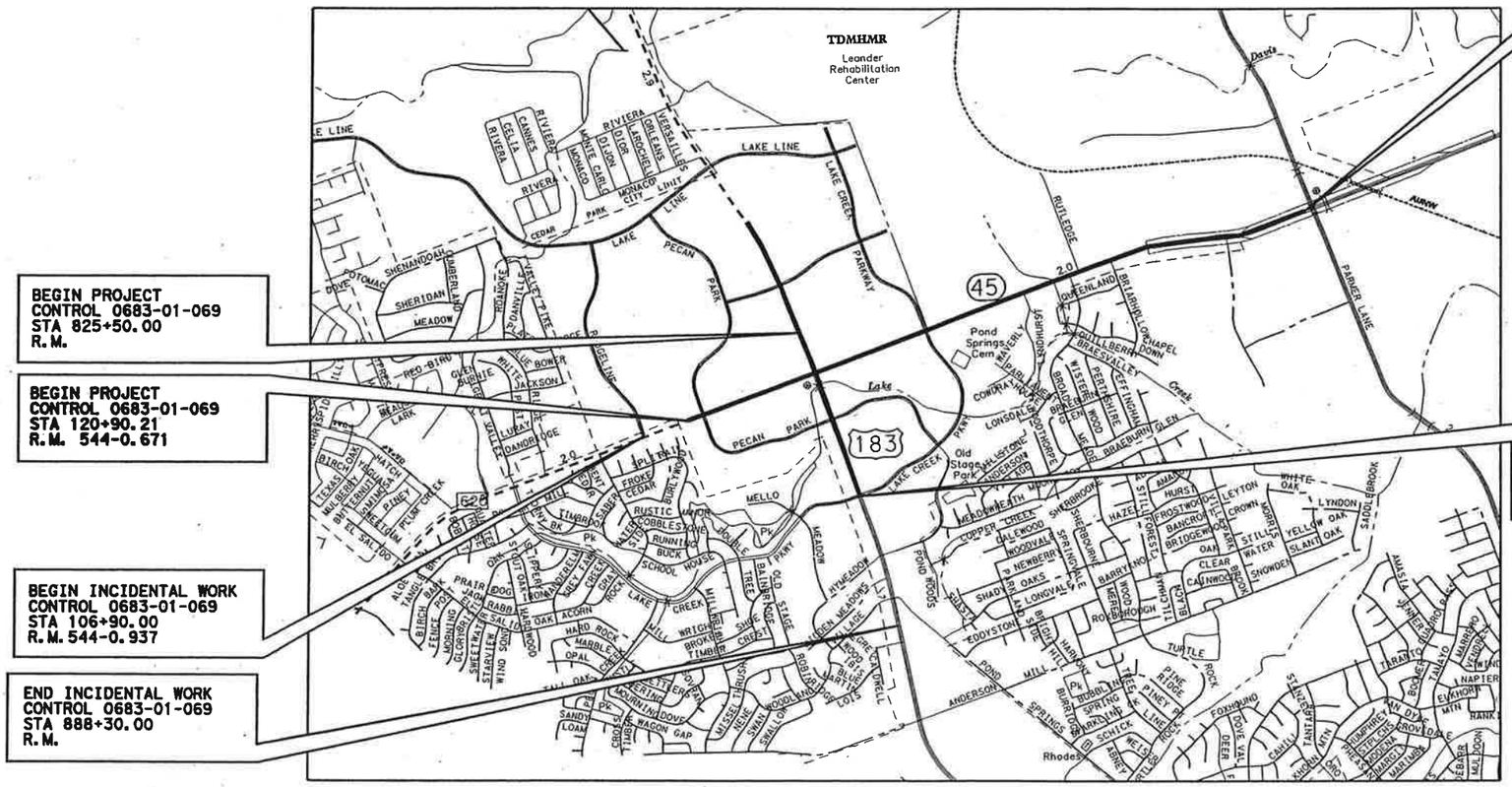

BEGIN PROJECT
CONTROL 0683-01-069
STA 825+50.00
R.M.

BEGIN PROJECT
CONTROL 0683-01-069
STA 120+90.21
R.M. 544-0.671

BEGIN INCIDENTAL WORK
CONTROL 0683-01-069
STA 106+90.00
R.M. 544-0.937

END INCIDENTAL WORK
CONTROL 0683-01-069
STA 888+30.00
R.M.

END PROJECT
CONTROL 0683-01-069
STA 252+50.00
R.M. 546-0.180

END PROJECT
CONTROL 0683-01-069
STA 858+02.00
R.M.

NO SCALE

ATTACHMENT NO. 1-99 TO SPECIAL AGREEMENT FOR CONSTRUCTION, MAINTENANCE AND OPERATIONS OF CONTINUOUS HIGHWAY ILLUMINATION SYSTEM, DATE: DECEMBER 2, 1983.

APPROVED BY
CITY OF AUSTIN _____ 19 ____

EQUATIONS: NONE
EXCEPTIONS: NONE
RAILROADS: NONE

TDLR INSPECTION REQUIRED

SPECIFICATIONS ADOPTED BY THE TEXAS DEPARTMENT OF TRANSPORTATION, MARCH 1, 1993 AND SPECIFICATION ITEMS LISTED AND DATED AS FOLLOWS, SHALL GOVERN ON THIS PROJECT: REQUIRED CONTRACT PROVISIONS FOR ALL FEDERAL-AID CONSTRUCTION CONTRACTS (FORM FHWA 1273, DEC. 1993).

PREPARED BY:
HNTB CORPORATION (DESIGN CONSULTANT)

_____ _____
Charles A. Dodge, P.E. DATE
Project Manager

RECOMMENDED BY
TURNER COLLIE AND BRADEN, INC.

_____ _____
PROJECT MANAGER DATE

RECOMMENDED BY:
TEXAS DEPARTMENT OF TRANSPORTATION

_____ _____
DIRECTOR OF ENGINEERING DATE
TEXAS TURNPIKE AUTHORITY DIVISION

APPROVED BY:
TEXAS DEPARTMENT OF TRANSPORTATION

_____ _____
EXECUTIVE DIRECTOR DATE
TEXAS TURNPIKE AUTHORITY DIVISION

RECOMMENDED BY:
TEXAS DEPARTMENT OF TRANSPORTATION

_____ _____
DIRECTOR OF DESIGN DATE

Texas Department of Transportation

© 2003 (512) 416-2055: ALL RIGHTS RESERVED

Scale: 20.032054:1.000000
Plotted on: 13-MAR-2003 12:59
Pen Table: X:\crespo\Active\SH45_2002\dgn\34601.pen
Design Filename: X:\crespo\Active\SH45_2002\dgn\sw3pnotes.dgn

STATE HIGHWAY 45/US 183 INTERCHANGE
TEMPORARY EROSION CONTROL NOTES

1. CONTRACTOR MUST APPLY FOR AN NPDES CONSTRUCTION GENERAL PERMIT NO LESS THAN TWO DAYS PRIOR TO THE START OF CONSTRUCTION. A CONSTRUCTION STORM WATER POLLUTION PREVENTION PLAN (SWPPP) HAS BEEN PREPARED FOR THIS PROJECT PURSUANT TO THE GENERAL PERMIT REGULATIONS. THE SWPPP IS BOUND SEPARATELY FROM THE CONSTRUCTION DRAWINGS. THE SWPPP MUST BE COMPLIED WITH, RETAINED ON SITE, AND KEPT CURRENT IN ACCORDANCE WITH THE REGULATIONS.

2. ALL DISTURBED AREAS SHALL BE STABILIZED BY SEEDING, SODDING, MULCHING, APPLICATION OF EROSION CONTROL FABRICS (GEOTEXTILES), OR OTHER APPROPRIATE MEASURES AS SOON POSSIBLE, BUT IN NO CASE MORE THAN 14 DAYS AFTER THE CONSTRUCTION ACTIVITY IN THAT PORTION OF THE SITE HAS TEMPORARILY OR PERMANENTLY CEASED. SOIL RETENTION BLANKET (CL2) (TY C) SHALL BE USED ON ALL SLOPES 3:1 OR STEEPER.

3. AREAS REQUIRING TEMPORARY SEEDING SHALL BE TREATED WITH CELLULOSE FIBER MULCH (ITEM 164).

4. SOIL RETENTION BLANKET (CL 2) (TYPE F) " FLEXIBLE CHANNEL LINER" SHALL BE PLACED A WIDTH OF 10 FEET ALONG ALL DITCH AND SWALE FLOWLINES.

5. SEDIMENT CONTROL FENCE (SCF) AND ROCK FILTER DAMS (RFD) MUST BE REPAIRED IF BLOWOUTS HAVE OCCURRED OR A WEAK SPOT HAS DEVELOPED.

6. SEDIMENT SHALL BE REMOVED FROM BEHIND SEDIMENT CONTROL FENCE AND ROCK FILTER DAMS WHEN IT REACHES 1/3 OF THE HEIGHT OF THE STRUCTURE, OR SIX INCHES (SCF) OR ONE FOOT (RFD), WHICHEVER IS LESS.

7. STABILIZED CONSTRUCTION EXITS SHALL BE CONSTRUCTED AT ALL ACCESS POINTS AND MAINTAINED IN A CONDITION THAT WILL PREVENT TRACKING OR FLOWING OF SEDIMENT OFF SITE. THIS MAY REQUIRE PERIODIC TOP DRESSING WITH CRUSHED STONE OR CLEAN OUT OF THE EXISTING STONE.

8. EXTERIOR SEDIMENT CONTROL FENCE ALONG ROW MAY BE REMOVED ON COMPLETION OF ADJACENT FRONTAGE ROAD CURB AND FINAL REVEGETATION OF AREA BETWEEN ROADWAY CURB AND THE ROW.

9. SEDIMENT CONTROL FENCE MAY BE REMOVED FROM CURB INLETS ONCE THE SUBGRADE IS COMPACTED AND THE TEMPORARY SEDIMENTATION PONDS ARE COMPLETED FOR THE DRAINAGE AREA.

10. ROCK FILTER DAMS WITH FILTER FABRIC (RFD-2F & RFD-3F) ARE ROCK FILTER DAMS (RFD-2 & RFD-3, RESPECTIVELY), WITH FILTER FABRIC AS SPECIFIED FOR SEDIMENT CONTROL FENCE, SECURELY ATTACHED TO THE UPSTREAM FACE UP TO THE FULL HEIGHT OF THE ROCK FILTER DAM. FILTER FABRIC SHALL BE REPLACED EVERY 2 MONTHS OR SOONER, IF STORMWATER IS RETAINED TO ONE-HALF THE RFD HEIGHT 72 HOURS AFTER RAIN HAS CEASED.

11. FOR EXISTING US183 SEDIMENTATION/FILTRATION PONDS,

A) REMOVE SEDIMENT AND REPLACE SAND FILTER IF POND DOES NOT DRAIN AT LEAST 50% WITHIN 72 HOURS. THIS MAY REQUIRE PUMPING OUT STANDING WATER.

B) REMOVE SEDIMENT AND REPLACE SAND FILTER UPON COMPLETION OF 90% OR MORE OF THE FINAL REVEGETATION WITHIN THE DRAINAGE AREA. THIS MAY REQUIRE PUMPING OUT STANDING WATER.

12. INSPECTIONS

A) VISUAL INSPECTIONS OF DISTURBED AREAS THAT HAVE NOT BEEN STABILIZED, AREAS USED FOR STORAGE OF EXPOSED MATERIALS, CONSTRUCTION EXITS, AND STORM WATER CONTROL SYSTEMS AND BMPS SHALL BE PERFORMED AT LEAST ONCE EVERY 14 DAYS AND WITHIN 24 HOURS OF THE END OF A STORM EVENT OF 0.5 INCHES OR GREATER.

B) AREAS THAT HAVE BEEN FINALLY OR TEMPORARILY STABILIZED MUST BE INSPECTED AT LEAST ONCE PER MONTH.

C) ALL AREAS EXPOSED TO PRECIPITATION MUST BE VISUALLY INSPECTED FOR EVIDENCE OF OR POTENTIAL FOR POLLUTANTS ENTERING THE DRAINAGE SYSTEM.

D) SEDIMENT AND EROSION CONTROLS MUST BE EVALUATED TO DETERMINE WHETHER THEY ARE ADEQUATE AND OPERATING PROPERLY OR WHETHER ADDITIONAL CONTROL MEASURES ARE NEEDED.

E) CONSTRUCTION EXITS MUST BE INSPECTED FOR EVIDENCE OF OFFSITE SEDIMENT TRACKING.

F) IF AN INSPECTION SHOWS THAT ADDITIONAL CONTROLS OR MODIFIED BMPS ARE NEEDED TO CORRECT PROBLEMS IDENTIFIED, THE SWPPP MUST BE MODIFIED WITHIN SEVEN CALENDAR DAYS FOLLOWING THE INSPECTION. THE ADDITIONAL OR MODIFIED BMPS MUST BE IMPLEMENTED PRIOR TO THE NEXT ANTICIPATED STORM EVENT.

TEXAS NATURAL RESOURCE CONSERVATION COMMISSION
WATER POLLUTION ABATEMENT PLAN
GENERAL CONSTRUCTION NOTES

1. WRITTEN CONSTRUCTION NOTIFICATION MUST BE GIVEN TO THE APPROPRIATE TNRCC REGIONAL OFFICE NO LATER THAN 48 HOURS PRIOR TO COMMENCEMENT OF THE REGULATED ACTIVITY. INFORMATION MUST INCLUDE THE DATE ON WHICH THE REGULATED ACTIVITY WILL COMMENCE, THE NAME OF THE APPROVED PLAN FOR THE REGULATED ACTIVITY, AND THE NAME OF THE PRIME CONTRACTOR AND THE NAME AND TELEPHONE NUMBER OF THE CONTACT PERSON.

2. ALL CONTRACTORS CONDUCTING REGULATED ACTIVITIES ASSOCIATED WITH THIS PROJECT MUST BE PROVIDED WITH COMPLETE COPIES OF THE APPROVED WATER POLLUTION ABATEMENT PLAN AND THE TNRCC LETTER INDICATING THE SPECIFIC CONDITIONS OF ITS APPROVAL. DURING THE COURSE OF THESE REGULATED ACTIVITIES, THE CONTRACTORS ARE REQUIRED TO KEEP ON-SITE COPIES OF THE APPROVED PLAN AND APPROVAL LETTER.

3. IF ANY SENSITIVE FEATURE IS DISCOVERED DURING CONSTRUCTION, ALL REGULATED ACTIVITIES NEAR THE SENSITIVE FEATURE MUST BE SUSPENDED IMMEDIATELY. THE APPROPRIATE TNRCC REGIONAL OFFICE MUST BE IMMEDIATELY NOTIFIED OF ANY SENSITIVE FEATURES ENCOUNTERED DURING CONSTRUCTION. THE REGULATED ACTIVITIES NEAR THE SENSITIVE FEATURE MAY NOT PROCEED UNTIL THE TNRCC HAS REVIEWED AND APPROVED THE METHODS PROPOSED TO PROTECT THE SENSITIVE FEATURE AND THE EDWARDS AQUIFER FROM ANY POTENTIALLY ADVERSE IMPACTS TO WATER QUALITY.

4. NO TEMPORARY ABOVEGROUND HYDROCARBON AND HAZARDOUS SUBSTANCE STORAGE TANK SYSTEM MAY BE INSTALLED WITHIN 150 FEET OF A DOMESTIC, INDUSTRIAL, IRRIGATION, OR PUBLIC WATER SUPPLY WELL, OR OTHER SENSITIVE FEATURE.

5. PRIOR TO COMMENCEMENT OF CONSTRUCTION, ALL TEMPORARY EROSION AND SEDIMENTATION (E&S) CONTROL MEASURES MUST BE PROPERLY SELECTED, INSTALLED, AND MAINTAINED IN ACCORDANCE WITH THE MANUFACTURERS SPECIFICATIONS AND GOOD ENGINEERING PRACTICES. CONTROLS SPECIFIED IN THE TEMPORARY STORM WATER SECTION OF THE APPROVED EDWARDS AQUIFER PROTECTION PLAN ARE REQUIRED DURING CONSTRUCTION. IF INSPECTIONS INDICATE A CONTROL HAS BEEN USED INAPPROPRIATELY, OR INCORRECTLY, THE APPLICANT MUST REPLACE OR MODIFY THE CONTROL FOR SITE SITUATIONS. THE CONTROLS MUST REMAIN IN PLACE UNTIL DISTURBED AREAS ARE REVEGETATED AND THE AREAS HAVE BECOME PERMANENTLY STABILIZED.

6. IF SEDIMENT ESCAPES THE CONSTRUCTION SITE, OFF-SITE ACCUMULATIONS OF SEDIMENT MUST BE REMOVED AT A FREQUENCY SUFFICIENT TO MINIMIZE OFFSITE IMPACTS TO WATER QUALITY (E.G., FUGITIVE SEDIMENT IN STREET BEING WASHED INTO SURFACE STREAMS OR SENSITIVE FEATURES BY THE NEXT RAIN).

8. SEDIMENT MUST BE REMOVED FROM SEDIMENT TRAPS OR SEDIMENTATION PONDS NOT LATER THAN WHEN DESIGN CAPACITY HAS BEEN REDUCED BY 50%. A PERMANENT STAKE MUST BE PROVIDED THAT CAN INDICATE WHEN THE SEDIMENT OCCUPIES 50% OF THE BASIN VOLUME.

9. LITTER, CONSTRUCTION DEBRIS, AND CONSTRUCTION CHEMICALS EXPOSED TO STORMWATER SHALL BE PREVENTED FROM BECOMING A POLLUTANT SOURCE FOR STORMWATER DISCHARGES (E.G., SCREENING OUTFALLS, PICKED UP DAILY).

8. ALL SPOILS (EXCAVATED MATERIAL) GENERATED FROM THE PROJECT SITE MUST BE STORED ON-SITE WITH PROPER E&S CONTROLS. FOR STORAGE OR DISPOSAL OF SPOILS AT ANOTHER SITE ON THE EDWARDS AQUIFER RECHARGE ZONE, THE OWNER OF THE SITE MUST RECEIVE APPROVAL OF A WATER POLLUTION ABATEMENT PLAN FOR THE PLACEMENT OF FILL MATERIAL OR MASS GRADING PRIOR TO THE PLACEMENT OF SPOILS AT THE OTHER SITE.

11. STABILIZATION MEASURES SHALL BE INITIATED AS SOON AS PRACTICABLE IN PORTIONS OF THE SITE WHERE CONSTRUCTION ACTIVITIES HAVE TEMPORARILY OR PERMANENTLY CEASED, BUT IN NO CASE MORE THAN 14 DAYS AFTER THE CONSTRUCTION ACTIVITY IN THAT PORTION OF THE SITE HAS TEMPORARILY OR PERMANENTLY CEASED. WHERE THE INITIATION OF STABILIZATION MEASURES BY THE 14TH DAY AFTER CONSTRUCTION ACTIVITY TEMPORARY OR PERMANENTLY CEASE IS PRECLUDED BY WEATHER CONDITIONS, STABILIZATION MEASURES SHALL BE INITIATED AS SOON AS PRACTICABLE. WHERE CONSTRUCTION ACTIVITY ON A PORTION OF THE SITE IS TEMPORARILY CEASED, AND EARTH DISTURBING ACTIVITIES WILL BE RESUMED WITHIN 21 DAYS, TEMPORARY STABILIZATION MEASURES DO NOT HAVE TO BE INITIATED ON THAT PORTION OF SITE. IN AREAS EXPERIENCING DROUGHTS WHERE THE INITIATION OF STABILIZATION MEASURES BY THE 14TH DAY AFTER CONSTRUCTION ACTIVITY HAS TEMPORARILY OR PERMANENTLY CEASED IS PRECLUDED BY SEASONAL ARID CONDITIONS, STABILIZATION MEASURES SHALL BE INITIATED AS SOON AS PRACTICABLE.

12. THE FOLLOWING RECORDS SHALL BE MAINTAINED AND MADE AVAILABLE TO THE TNRCC UPON REQUEST: THE DATES WHEN MAJOR GRADING ACTIVITIES OCCUR; THE DATES WHEN CONSTRUCTION ACTIVITIES TEMPORARILY OR PERMANENTLY CEASE ON A PORTION OF THE SITE; AND THE DATES WHEN STABILIZATION MEASURES ARE INITIATED.

13. THE HOLDER OF ANY APPROVED EDWARD AQUIFER PROTECTION PLAN MUST NOTIFY THE APPROPRIATE REGIONAL OFFICE IN WRITING AND OBTAIN APPROVAL FROM THE EXECUTIVE DIRECTOR PRIOR TO INITIATING ANY OF THE FOLLOWING:

A. ANY PHYSICAL OR OPERATIONAL MODIFICATION OF ANY WATER POLLUTION ABATEMENT STRUCTURE(S), INCLUDING BUT NOT LIMITED TO PONDS, DAMS, BERMS, SEWAGE TREATMENT PLANTS, AND DIVERSIONARY STRUCTURES;

B. ANY CHANGE IN THE NATURE OR CHARACTER OF THE REGULATED ACTIVITY FROM THAT WHICH WAS ORIGINALLY APPROVED OR A CHANGE WHICH WOULD SIGNIFICANTLY IMPACT THE ABILITY OF THE PLAN TO PREVENT POLLUTION OF THE EDWARDS AQUIFER;

C. ANY DEVELOPMENT OF LAND PREVIOUSLY IDENTIFIED AS UNDEVELOPED IN THE ORIGINAL WATER POLLUTION ABATEMENT PLAN.

TEXAS NATURAL RESOURCE CONSERVATION COMMISSION
AUSTIN REGIONAL OFFICE
1921 CEDAR BEND, SUITE 150
AUSTIN, TEXAS 78758-5336
PHONE (512) 339-2929
FAX (512) 339-3795

STATE OF TEXAS
L. STEPHEN STECHER
55645
LICENSED
PROFESSIONAL ENGINEER

STORMWATER POLLUTION PREVENTION PLAN

EROSION CONTROL AND WATER POLLUTION ABATEMENT PLAN NOTES

SH 45 / US 183 INTERCHANGE

HNTB ARCHITECTS ENGINEERS PLANNERS
The HNTB Companies

Crespo Consulting Services, Inc
Civil & Environmental Engineering

Texas Department of Transportation
©2003 TEXAS TURNPIKE AUTHORITY DIVISION

DRAWING PREPARED BY: CRESPO CONSULTING SERVICES, INC.

FED. RD. DIV. NO.	FEDERAL AID PROJECT NO.			SHEET NO.
6	MG 2002 (243)			1644
DGN: LSS	STATE	DIST.	COUNTY	
CHK. DGN: JSC	TEXAS	14	WILLIAMSON	
DES: SKF	CONT.	SECT.	JOB	HIGHWAY NO.
CHK. DES: JLL	0683	01	069	SH 45

Scale: 9.200000:1.000000
Plotted on: 18-APR-2003 09:35

Texas Natural Resource Conservation Commission
Water Pollution Abatement Plan
General Construction Notes

1. Written construction notification must be given to the appropriate TNRCC regional office no later than 48 hours prior to commencement of the regulated activity. Information must include the date on which the regulated activity will commence, the name of the approved plan for the regulated activity, and the name of the prime contractor and the name and telephone number of the contact person.

2. All contractors conducting regulated activities associated with this project must be provided with complete copies of the approved Water Pollution Abatement Plan and the TNRCC letter indicating the specific conditions of its approval. During the course of these regulated activities, the contractors are required to keep on-site copies of the approved plan and approval letter.

3. If any sensitive feature is discovered during construction, all regulated activities near the sensitive feature must be suspended immediately. The appropriate TNRCC regional office must be immediately notified of any sensitive features encountered during construction. The regulated activities near the sensitive feature may not proceed until the TNRCC has reviewed and approved the methods proposed to protect the sensitive feature and the Edwards Aquifer from any potentially adverse impacts to water quality.

4. No temporary aboveground hydrocarbon and hazardous substance storage tank system is installed within 150 feet of a domestic, industrial, irrigation, or public water supply well, or other sensitive feature.

5. Prior to commencement of construction, all temporary erosion and sedimentation (E&S) control measures must be properly selected, installed, and maintained in accordance with the manufacturers specifications and good engineering practices. Controls specified in the temporary storm water section of the approved Edwards Aquifer Protection Plan are required during construction. If inspections indicate a control has been used inappropriately, or incorrectly, the applicant must replace or modify the control for site situations. The controls must remain in place until disturbed areas are revegetated and the areas have become permanently stabilized.

6. If sediment escapes the construction site, off-site accumulations of sediment must be removed at a frequency sufficient to minimize offsite impacts to water quality (e.g., fugitive sediment in street being washed into surface streams or sensitive features by the next rain).

7. Sediment must be removed from sediment traps or sedimentation ponds not later than when design capacity has been reduced by 50%. A permanent stake must be provided that can indicate when the sediment occupies 50% of the basin volume.

8. Litter, construction debris, and construction chemicals exposed to stormwater shall be prevented from becoming a pollutant source for stormwater discharges (e.g., screening outfalls, picked up daily).

9. All spoils (excavated material) generated from the project site must be stored on-site with proper E&S controls. For storage or disposal of spoils at another site on the Edwards Aquifer Recharge Zone, the owner of the site must receive approval of a water pollution abatement plan for the placement of fill material or mass grading prior to the placement of spoils at the other site.

10. Stabilization measures shall be initiated as soon as practicable in portions of the site where construction activities have temporarily or permanently ceased, but in no case more than 14 days after the construction activity in that portion of the site has temporarily or permanently ceased. Where the initiation of stabilization measures by the 14th day after construction activity temporary or permanently cease is precluded by weather conditions, stabilization measures shall be initiated as soon as practicable. Where construction activity on a portion of the site is temporarily ceased, and earth disturbing activities will be resumed within 21 days, temporary stabilization measures do not have to be initiated on that portion of site. In areas experiencing droughts where the initiation of stabilization measures by the 14th day after construction activity has temporarily or permanently ceased is precluded by seasonal arid conditions, stabilization measures shall be initiated as soon as practicable.

11. The following records shall be maintained and made available to the TNRCC upon request: the dates when major grading activities occur; the dates when construction activities temporarily or permanently cease on a portion of the site; and the dates when stabilization measures are initiated.

12. The holder of any approved Edward Aquifer protection plan must notify the appropriate regional office in writing and obtain approval from the executive director prior to initiating any of the following:

A. any physical or operational modification of any water pollution abatement structure(s), including but not limited to ponds, dams, berms, sewage treatment plants, and diversionary structures;

B. any change in the nature or character of the regulated activity from that which was originally approved or a change which would significantly impact the ability of the plan to prevent pollution of the Edwards Aquifer;

C. any development of land previously identified as undeveloped in the original water pollution abatement plan.

Austin Regional Office 1921 Cedar Bend, Suite 150 Austin, Texas 78758-5336 Phone (512) 339-2929 Fax (512) 339-3795	San Antonio Regional Office 14250 Judson Road San Antonio, Texas 78233-4480 Phone (210) 490-3096 Fax (210) 545-4329

THESE GENERAL CONSTRUCTION NOTES MUST BE INCLUDED ON THE CONSTRUCTION PLANS PROVIDED TO THE CONTRACTOR AND ALL SUBCONTRACTORS.

John W. Strybos
STATE OF TEXAS
JOHN W. STRYBOS
64259
LICENSED
PROFESSIONAL ENGINEER
4-18-2003

WATER POLLUTION ABATEMENT PLAN

CONSTRUCTION GENERAL NOTES

SH 45 / US 183 INTERCHANGE

HNTB ARCHITECTS ENGINEERS PLANNERS
The HNTB Companies

Texas Department of Transportation
© 2003 TEXAS TURNPIKE AUTHORITY DIVISION

DRAWING PREPARED BY:	HNTB CORPORATION			
SHEET 1 OF 1				
FED. RD. DIV. NO.	FEDERAL AID PROJECT NO.			SHEET NO.
6	MG 2002 (243)			
DGN:	STATE	DIST.	COUNTY	
CHK DGN:	TEXAS	14	WILLIAMSON	
DWG:	CONT.	SECT.	JOB	HIGHWAY NO.
CHK DWG:	0683	01	069	SH 45

Pen Table: I:\Jobs\32058\techprod\rdwy\plots\32058h.pen
Design Filename: I:\Jobs\32058\TECHPROD\Rdwy\Dwg\phs1\45wpapsgn.dgn

Scale: 100.000000:1.000000
Plotted on: 10-MAR-2003 14:18

Pen Table: X:\crespo\Active\SH45_2002\dgn\34601w.pen
Design Filename: X:\crespo\Active\SH45_2002\dgn\45wP0808.DGN

MATCH LINE STA 112+00

MATCH LINE STA 124+00

Ked

SCF
755 LF

RFD
24 LF

SOIL RETENTION BLANKET
25 FT WIDTH

115+00

120+00

S-5

S-4

SCF
671 LF

LEGEND

	ROCK FILTER DAM
RFD2	ROCK FILTER DAM TYPE II
RFD2-F	ROCK FILTER DAM TYPE II WITH SCF FILTER FABRIC ATTACHED TO UPSTREAM FACE
RFD3	ROCK FILTER DAM TYPE III
RFD3-F	ROCK FILTER DAM TYPE III WITH SCF FILTER FABRIC ATTACHED TO UPSTREAM FACE
SCF	SEDIMENT CONTROL FENCE
D	DIKE
S	SWALE
	SEEDING
	RIPRAP
S-•	MANMADE FEATURE (WELL)
S-•	GEOLOGIC OR MANMADE FEATURE
Ked	EDWARDS FORMATION OUTCROP

STATE HIGHWAY 45/US 183 INTERCHANGE
TEMPORARY EROSION CONTROL NOTES:

1. THE CONTRACTOR SHALL INSTALL ALL TEMPORARY AND PERMANENT EROSION CONTROL FEATURES AT THE EARLIEST TIME PRACTICABLE.

2. AREAS REQUIRING TEMPORARY SEEDING SHALL BE TREATED WITH CELLULOSE FIBER MULCH (ITEM 164).

3. SOIL RETENTION BLANKET (CL 2, TYPE F "FLEXIBLE CHANNEL LINER") SHALL BE PLACED A WIDTH OF 10 FEET ALONG ALL DITCH AND SWALE FLOWLINES AND AS SHOWN ADDITIONALLY ON THE PLANS.

4. SOIL RETENTION BLANKET (CL 1, TYPE C "VEGETATIVE MAT") SHALL BE PLACED ON ALL SLOPES GREATER THAN OR EQUAL TO 4:1, INCLUDING POND SIDE SLOPES.

5. SEDIMENT CONTROL FENCE (SCF) SHALL BE PLACED IN SUCH A MANNER TO INTERCEPT FLOW AT ALL INLETS AS SHOWN ON THE PLANS.

STATE OF TEXAS
L. STEPHEN STECHER
55645
LICENSED
PROFESSIONAL ENGINEER
3/12/03

WATER POLLUTION ABATEMENT PLAN

SH 45
STA 112+00 TO STA 124+00

SH 45 / US 183 INTERCHANGE

SCALE: PLAN 1":100'

HNTB ARCHITECTS ENGINEERS PLANNERS
The HNTB Companies

Crespo Consulting Services, Inc
Civil & Environmental Engineering

Texas Department of Transportation
©2003 TEXAS TURNPIKE AUTHORITY DIVISION

DRAWING PREPARED BY: CRESPO CONSULTING SERVICES, INC.

SHEET 1 OF 12

FED. RD. DIV. NO.	FEDERAL AID PROJECT NO.			SHEET NO.
6	MG 2002 (243)			001
DSGN LSS	STATE	DIST.	COUNTY	
CHK JSC	TEXAS	14	WILLIAMSON	
DWN SKF	CONT.	SECT.	JOB	HIGHWAY NO.
CHK JLL	0683	01	089	SH 45

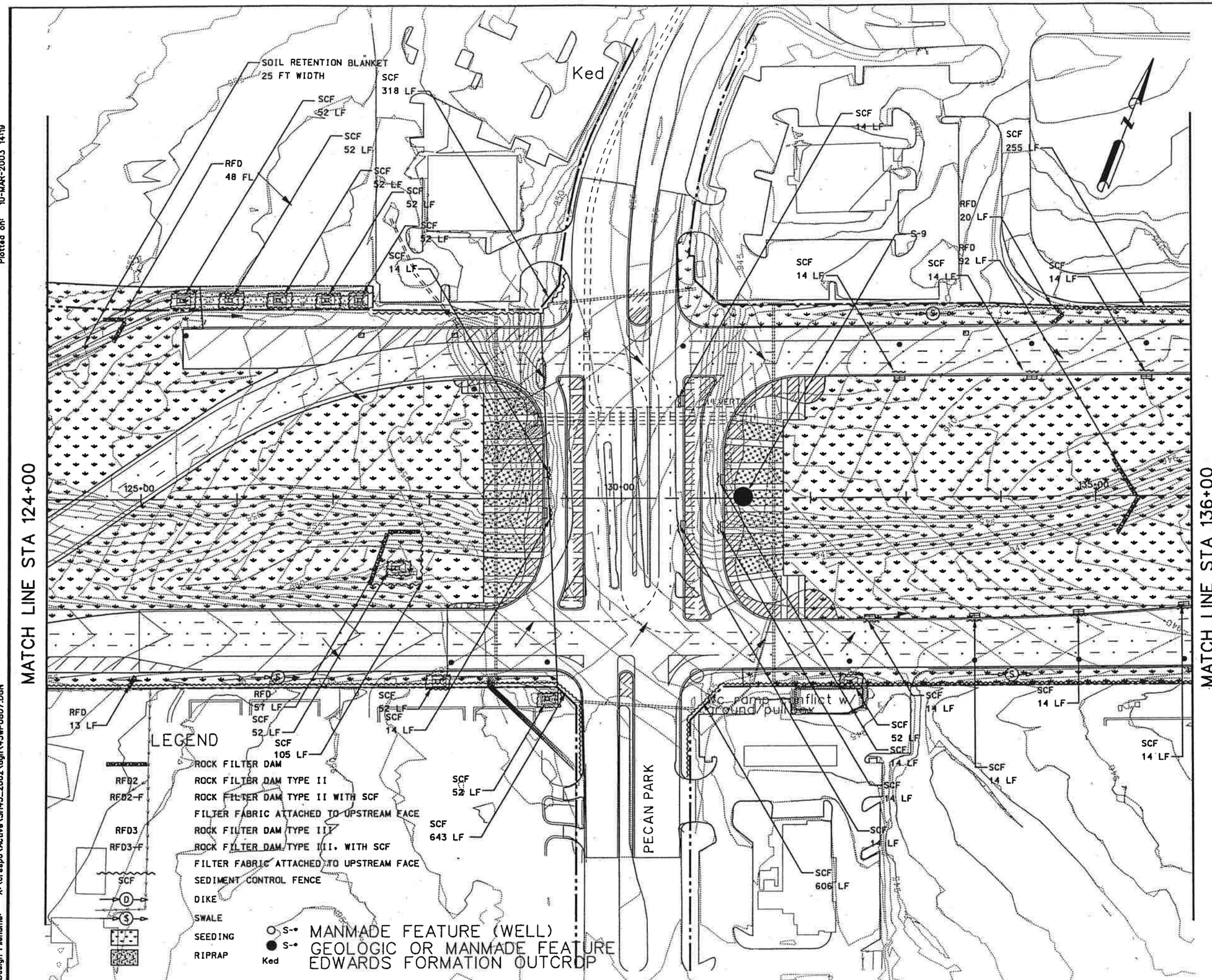

STATE HIGHWAY 45/US 183 INTERCHANGE
TEMPORARY EROSION CONTROL NOTES:

1. THE CONTRACTOR SHALL INSTALL ALL TEMPORARY AND PERMANENT EROSION CONTROL FEATURES AT THE EARLIEST TIME PRACTICABLE.

2. AREAS REQUIRING TEMPORARY SEEDING SHALL BE TREATED WITH CELLULOSE FIBER MULCH (ITEM 164).

3. SOIL RETENTION BLANKET (CL 2, TYPE F "FLEXIBLE CHANNEL LINER") SHALL BE PLACED A WIDTH OF 10 FEET ALONG ALL DITCH AND SWALE FLOWLINES AND AS SHOWN ADDITIONALLY ON THE PLANS.

4. SOIL RETENTION BLANKET (CL 1, TYPE C "VEGETATIVE MAT") SHALL BE PLACED ON ALL SLOPES GREATER THAN OR EQUAL TO 4:1, INCLUDING POND SIDE SLOPES.

5. SEDIMENT CONTROL FENCE (SCF) SHALL BE PLACED IN SUCH A MANNER TO INTERCEPT FLOW AT ALL INLETS AS SHOWN ON THE PLANS.

STATE OF TEXAS
L. STEPHEN STECHER
55645
LICENSED
PROFESSIONAL ENGINEER
3/11/03

WATER POLLUTION ABATEMENT PLAN

SH 45
STA 124+00 TO STA 136+00

SH 45 / US 183 INTERCHANGE

SCALE: PLAN 1":100'

HNTB ARCHITECTS ENGINEERS PLANNERS
The HNTB Companies

Crespo Consulting Services, Inc
Civil & Environmental Engineering

Texas Department of Transportation
©2003 TEXAS TURNPIKE AUTHORITY DIVISION

DRAWING PREPARED BY: CRESPO CONSULTING SERVICES, INC.

SHEET 2 OF 12

FED. RD. DIV. NO.	FEDERAL AID PROJECT NO.	SHEET NO.
6	MG 2002 (243)	002

DGN: LSS	STATE	DIST.	COUNTY	
CHK DGN: JSC	TEXAS	14	WILLIAMSON	
DWG: SKF	CONT.	SECT.	JOB	HIGHWAY NO.
CHK DWG: JLL	0683	01	069	SH 45

Scale: 100.0000001:1.000000
Plotted on: 10-MAR-2003 14:19
Pen Table: X:\cres...ctive\SH45_2002\dgn\34601w.pen
Design Filename: X:\crespo\Active\SH45_2002\dgn\45wP0807.DGN

Scale: 100.000000=1.000000
Plotted on: 17-APR-2003 17:43

Pen Table: X:\crespo\Active\SH45_2002\dgn\34601w.pen
Design Filename: X:\crespo\Active\SH45_2002\dgn\45wP0808.DGN

MATCH LINE STA 136+00

MATCH LINE STA 148+00

LINE B AND LINE C POND
(SEE EXTENDED DETENTION POND DESIGN)

BMP POND E

DETENTION POND

Ked

LEGEND

RFD	ROCK FILTER DAM
RFD2	ROCK FILTER DAM TYPE II
RFD2-F	ROCK FILTER DAM TYPE II WITH SCF FILTER FABRIC ATTACHED TO UPSTREAM FACE
RFD3	ROCK FILTER DAM TYPE III
RFD3-F	ROCK FILTER DAM TYPE III, WITH SCF FILTER FABRIC ATTACHED TO UPSTREAM FACE
SCF	SEDIMENT CONTROL FENCE
D	DIKE
S	SWALE
	SEEDING
	RIPRAP

S-* MANMADE FEATURE (WELL)
Ked GEOLOGIC OR MANMADE FEATURE
EDWARDS FORMATION OUTCROP

STATE HIGHWAY 45/US 183 INTERCHANGE
TEMPORARY EROSION CONTROL NOTES:

1. THE CONTRACTOR SHALL INSTALL ALL TEMPORARY AND PERMANENT EROSION CONTROL FEATURES AT THE EARLIEST TIME PRACTICABLE.

2. AREAS REQUIRING TEMPORARY SEEDING SHALL BE TREATED WITH CELLULOSE FIBER MULCH (ITEM 164).

3. SOIL RETENTION BLANKET (CL 2, TYPE F "FLEXIBLE CHANNEL LINER") SHALL BE PLACED A WIDTH OF 10 FEET ALONG ALL DITCH AND SWALE FLOWLINES AND AS SHOWN ADDITIONALLY ON THE PLANS.

4. SOIL RETENTION BLANKET (CL 1, TYPE C "VEGETATIVE MAT") SHALL BE PLACED ON ALL SLOPES GREATER THAN OR EQUAL TO 4:1, INCLUDING POND SIDE SLOPES.

5. SEDIMENT CONTROL FENCE (SCF) SHALL BE PLACED IN SUCH A MANNER TO INTERCEPT FLOW AT ALL INLETS AS SHOWN ON THE PLANS.

STATE OF TEXAS
L. STEPHEN STECHER
55645
LICENSED
PROFESSIONAL ENGINEER

4/17/03

WATER POLLUTION ABATEMENT PLAN

SH 45
STA 136+00 TO STA 148+00

SH 45 / US 183 INTERCHANGE

SCALE: PLAN 1":100'

HNTB ARCHITECTS ENGINEERS PLANNERS
The HNTB Companies

Crespo Consulting Services, Inc
Civil & Environmental Engineering

Texas Department of Transportation
©2003 TEXAS TURNPIKE AUTHORITY DIVISION

DRAWING PREPARED BY: CRESPO CONSULTING SERVICES, INC.

SHEET 3 OF 12

FED. RD. DIV. NO.	FEDERAL AID PROJECT NO.	SHEET NO.
6	MG 2002 (243)	003

DGN: LSS	STATE	DIST.	COUNTY
CHK DGN: JSC	TEXAS	14	WILLIAMSON
DRN: SKF	CONT.	SECT.	JOB	HIGHWAY NO.
CHK DRN: JLL	0683	01	069	SH 45

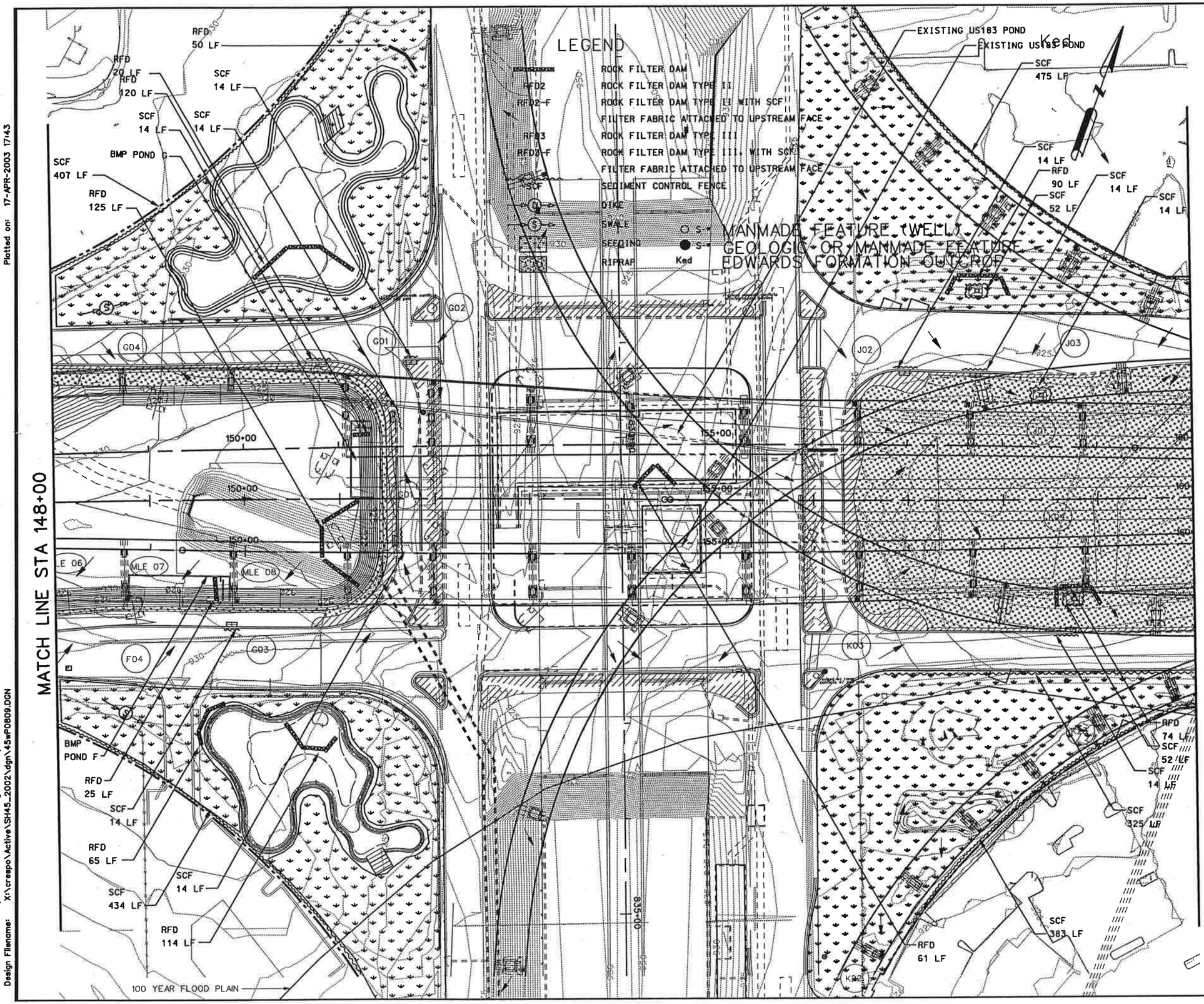

STATE HIGHWAY 45/US 183 INTERCHANGE TEMPORARY EROSION CONTROL NOTES:

1. THE CONTRACTOR SHALL INSTALL ALL TEMPORARY AND PERMANENT EROSION CONTROL FEATURES AT THE EARLIEST TIME PRACTICABLE.

2. AREAS REQUIRING TEMPORARY SEEDING SHALL BE TREATED WITH CELLULOSE FIBER MULCH (ITEM 164).

3. SOIL RETENTION BLANKET (CL 2, TYPE F "FLEXIBLE CHANNEL LINER") SHALL BE PLACED A WIDTH OF 10 FEET ALONG ALL DITCH AND SWALE FLOWLINES AND AS SHOWN ADDITIONALLY ON THE PLANS.

4. SOIL RETENTION BLANKET (CL 1, TYPE C "VEGETATIVE MAT") SHALL BE PLACED ON ALL SLOPES GREATER THAN OR EQUAL TO 4:1, INCLUDING POND SIDE SLOPES.

5. SEDIMENT CONTROL FENCE (SCF) SHALL BE PLACED IN SUCH A MANNER TO INTERCEPT FLOW AT ALL INLETS AS SHOWN ON THE PLANS.

STATE OF TEXAS
L. STEPHEN STECHER
55645
LICENSED
PROFESSIONAL ENGINEER
4/17/03

WATER POLLUTION ABATEMENT PLAN

SH 45
STA 148+00 TO STA 160+00

SH 45 / US 183 INTERCHANGE

SCALE: PLAN 1":100'

HNTB ARCHITECTS ENGINEERS PLANNERS
The HNTB Companies

Crespo Consulting Services, Inc
Civil & Environmental Engineering

Texas Department of Transportation
©2003 TEXAS TURNPIKE AUTHORITY DIVISION

DRAWING PREPARED BY: CRESPO CONSULTING SERVICES, INC.

SHEET 4 OF 12

FED. RD. DIV. NO.	FEDERAL AID PROJECT NO.	SHEET NO.
6	MG 2002 (243)	004

	STATE	DIST.	COUNTY	
DGN: LSS	TEXAS	14	WILLIAMSON	
CHK DGN: JSC				
DWN: SKF	CONT.	SECT.	JOB	HIGHWAY NO.
CHK DWG: JLL	0683	01	069	SH 45

Scale: 100.000000:1.000000
Plotted on: 17-APR-2003 17:43

Pen Table: X:\crespo\Active\SH45_2002\dgn\34601w.pen
Design Filename: X:\crespo\Active\SH45_2002\dgn\45wP0809.DGN

Scale: 100.000000:1.000000
Plotted on: 10-MAR-2003 14:20

Pen Table: X:\crespo\Active\SH45_2002\dgn\3460tw.pen
Design Filename: X:\crespo\Active\SH45_2002\dgn\45wP0810.DGN

MATCH LINE STA 160+00

MATCH LINE STA 172+00

Ked

SCF 52 LF
RFD 48 LF
SCF 1201 LF
SCF 14 LF
SCF 52 LF
SCF 52 LF
RFD 56 LF
SCF 14 LF
RFD 30 LF
RFD 43 LF
S-21
S-26
S-22
S-25
S-24
S-23
S-27
SCF 205 LF
SCF 14 LF
SCF 14 LF
SCF 52 LF
RFD 30 LF
SCF 52 LF
SCF 14 LF
SCF 210 LF
SCF 675 LF
SCF 14 LF
SCF 52 LF
165+00
165+80
170+00

LEGEND

	ROCK FILTER DAM
RFD2	ROCK FILTER DAM TYPE II
RFD2-F	ROCK FILTER DAM TYPE II WITH SCF FILTER FABRIC ATTACHED TO UPSTREAM FACE
RFD3	ROCK FILTER DAM TYPE III
RFD3-F	ROCK FILTER DAM TYPE III WITH SCF FILTER FABRIC ATTACHED TO UPSTREAM FACE
SCF	SEDIMENT CONTROL FENCE
D	DIKE
S	SWALE
	SEEDING
	RIPRAP
S-#	MANMADE FEATURE (WELL)
S-# Ked	GEOLOGIC OR MANMADE FEATURE EDWARDS FORMATION OUTCROP

STATE HIGHWAY 45/US 183 INTERCHANGE
TEMPORARY EROSION CONTROL NOTES:

1. THE CONTRACTOR SHALL INSTALL ALL TEMPORARY AND PERMANENT EROSION CONTROL FEATURES AT THE EARLIEST TIME PRACTICABLE.

2. AREAS REQUIRING TEMPORARY SEEDING SHALL BE TREATED WITH CELLULOSE FIBER MULCH (ITEM 164).

3. SOIL RETENTION BLANKET (CL 2, TYPE F "FLEXIBLE CHANNEL LINER") SHALL BE PLACED A WIDTH OF 10 FEET ALONG ALL DITCH AND SWALE FLOWLINES AND AS SHOWN ADDITIONALLY ON THE PLANS.

4. SOIL RETENTION BLANKET (CL 1, TYPE C "VEGETATIVE MAT") SHALL BE PLACED ON ALL SLOPES GREATER THAN OR EQUAL TO 4:1, INCLUDING POND SIDE SLOPES.

5. SEDIMENT CONTROL FENCE (SCF) SHALL BE PLACED IN SUCH A MANNER TO INTERCEPT FLOW AT ALL INLETS AS SHOWN ON THE PLANS.

STATE OF TEXAS
L. STEPHEN STECHER
55645
LICENSED
PROFESSIONAL ENGINEER
3/11/03

WATER POLLUTION ABATEMENT PLAN

SH 45
STA 160+00 TO STA 172+00

SH 45 / US 183 INTERCHANGE

SCALE: PLAN 1":100'

HNTB ARCHITECTS ENGINEERS PLANNERS
The HNTB Companies

Crespo Consulting Services, Inc
Civil & Environmental Engineering

Texas Department of Transportation
©2003 TEXAS TURNPIKE AUTHORITY DIVISION

DRAWING PREPARED BY: CRESPO CONSULTING SERVICES, INC.

SHEET 5 OF 12

FED. RD. DIV. NO.	FEDERAL AID PROJECT NO.	SHEET NO.
6	MG 2002 (243)	005

DSGN LSS	STATE	DIST.	COUNTY
CHK JSC	TEXAS	14	WILLIAMSON
DWN SKF	CONT.	SECT.	JOB / HIGHWAY NO.
CHK JLL	0883	01	069 / SH 45

Scale: 100.000000:1.000000
Plotted on: 10-MAR-2003 14:21

Pen Table: X:\crespo\Active\SH45_2002\dgn\3460tw.pen
Design Filename: X:\crespo\Active\SH45_2002\dgn\45wPOB11.DGN

MATCH LINE STA 172+00

MATCH LINE STA 184+00

Ked

SCF 52 LF
S-28
SCF 52 LF
SCF 462 LF
RFD 47 LF
SCF 14 LF
SCF 52 LF
RFD 53 LF
SCF 14 LF
SCF 340 LF
SCF 52 LF
SCF 14 LF
SCF 52 LF
SCF 40 LF
SOIL RETENTION BLANKET 55 FT WIDTH
RFD 40 LF
SCF 52 LF
RFD 40 LF
SCF 14 LF
SCF 52 LF
SCF 52 LF
SCF 52 LF
SCF 14 LF
SCF 52 LF
SCF 457 LF
SCF 14 LF
SCF 14 LF
SCF 782 LF
SCF 52 LF
SCF 15 LF
RFD 17 LF
SCF 52 LF
SCF 52 LF
SCF 38 LF
SCF 14 LF

S-00

180+00

LEGEND

	ROCK FILTER DAM
RFD2	ROCK FILTER DAM TYPE II
RFD2-F	ROCK FILTER DAM TYPE II WITH SCF FILTER FABRIC ATTACHED TO UPSTREAM FACE
RFD3	ROCK FILTER DAM TYPE III
RFD3-F	ROCK FILTER DAM TYPE III WITH SCF FILTER FABRIC ATTACHED TO UPSTREAM FACE
SCF	SEDIMENT CONTROL FENCE
D	DIKE
S	SWALE
	SEEDING
	RIPRAP

○ S-• MANMADE FEATURE (WELL)
● S-• GEOLOGIC OR MANMADE FEATURE
Ked EDWARDS FORMATION OUTCROP

STATE HIGHWAY 45/US 183 INTERCHANGE
TEMPORARY EROSION CONTROL NOTES:

1. THE CONTRACTOR SHALL INSTALL ALL TEMPORARY AND PERMANENT EROSION CONTROL FEATURES AT THE EARLIEST TIME PRACTICABLE.

2. AREAS REQUIRING TEMPORARY SEEDING SHALL BE TREATED WITH CELLULOSE FIBER MULCH (ITEM 164).

3. SOIL RETENTION BLANKET (CL 2, TYPE F "FLEXIBLE CHANNEL LINER") SHALL BE PLACED A WIDTH OF 10 FEET ALONG ALL DITCH AND SWALE FLOWLINES AND AS SHOWN ADDITIONALLY ON THE PLANS.

4. SOIL RETENTION BLANKET (CL 1, TYPE C "VEGETATIVE MAT") SHALL BE PLACED ON ALL SLOPES GREATER THAN OR EQUAL TO 4:1, INCLUDING POND SIDE SLOPES.

5. SEDIMENT CONTROL FENCE (SCF) SHALL BE PLACED IN SUCH A MANNER TO INTERCEPT FLOW AT ALL INLETS AS SHOWN ON THE PLANS.

STATE OF TEXAS
L. STEPHEN STECHER
55645
LICENSED
PROFESSIONAL ENGINEER
3/11/03

WATER POLLUTION ABATEMENT PLAN

SH 45
STA 172+00 TO STA 184+00

SH 45 / US 183 INTERCHANGE

SCALE: PLAN 1":100'

HNTB ARCHITECTS ENGINEERS PLANNERS
The HNTB Companies

Crespo Consulting Services, Inc
Civil & Environmental Engineering

Texas Department of Transportation
©2003 TEXAS TURNPIKE AUTHORITY DIVISION

DRAWING PREPARED BY: CRESPO CONSULTING SERVICES, INC.

SHEET 6 OF 12

FED. RD. DIV. NO.	FEDERAL AID PROJECT NO.		SHEET NO.
6	MG 2002 (243)		006
DSGN: LSS	STATE	DIST.	COUNTY
CHK: JSC	TEXAS	14	WILLIAMSON
DWN: SKF	CONT.	SECT.	JOB / HIGHWAY NO.
CHK: JLL	0683	01	069 / SH 45

Scale: 100.000000:1.000000
Plotted on: 11-MAR-2003 16:50

Pen Table: X:\crespo\Active\SH45_2002\dgn\3460tw.pen
Design Filename: X:\crespo\Active\SH45_2002\dgn\45wP0812.DGN

MATCH LINE STA 184+00

MATCH LINE STA 196+00

Ked

NORTH BRANCH WATER QUALITY POND WEST

100 YEAR FLOOD PLAIN

SOIL RETENTION BLANKET
55 FT WIDTH

SCF
14 LF

SCF
52 LF

RFD
40 LF

RFD
160 LF

RFD
92 LF

S-19

S-18

185+00

190+00

195+00

SCF
845 LF

TEMPORARY POND OUTLET

TEMPORARY RISER

TEMPORARY UNDERDRAIN

RFD
25 LF

LEGEND

	ROCK FILTER DAM
RFD2	ROCK FILTER DAM TYPE II
RFD2-F	ROCK FILTER DAM TYPE II WITH SCF FILTER FABRIC ATTACHED TO UPSTREAM FACE
RFD3	ROCK FILTER DAM TYPE III
RFD3-F	ROCK FILTER DAM TYPE III WITH SCF FILTER FABRIC ATTACHED TO UPSTREAM FACE
SCF	SEDIMENT CONTROL FENCE
D	DIKE
S	SWALE
	SEEDING
	RIPRAP
S-•	MANMADE FEATURE (V
S-• Kad	GEOLOGIC OR MANMA EDWARDS FORMATION

STATE HIGHWAY 45/US 183 INTERCHANGE
TEMPORARY EROSION CONTROL NOTES:

1. THE CONTRACTOR SHALL INSTALL ALL TEMPORARY AND PERMANENT EROSION CONTROL FEATURES AT THE EARLIEST TIME PRACTICABLE.

2. AREAS REQUIRING TEMPORARY SEEDING SHALL BE TREATED WITH CELLULOSE FIBER MULCH (ITEM 164).

3. SOIL RETENTION BLANKET (CL 2, TYPE F "FLEXIBLE CHANNEL LINER") SHALL BE PLACED A WIDTH OF 10 FEET ALONG ALL DITCH AND SWALE FLOWLINES AND AS SHOWN ADDITIONALLY ON THE PLANS.

4. SOIL RETENTION BLANKET (CL 1, TYPE C "VEGETATIVE MAT") SHALL BE PLACED ON ALL SLOPES GREATER THAN OR EQUAL TO 4:1, INCLUDING POND SIDE SLOPES.

5. SEDIMENT CONTROL FENCE (SCF) SHALL BE PLACED IN SUCH A MANNER TO INTERCEPT FLOW AT ALL INLETS AS SHOWN ON THE PLANS.

L. Stephen Stecher
STATE OF TEXAS
L. STEPHEN STECHER
55645
LICENSED
PROFESSIONAL ENGINEER
3-11-03

WATER POLLUTION ABATEMENT PLAN

SH 45
STA 184+00 TO STA 196+00

SH 45 / US 183 INTERCHANGE

SCALE: PLAN 1"=100'

HNTB ARCHITECTS ENGINEERS PLANNERS
The HNTB Companies

Crespo Consulting Services, Inc
Civil & Environmental Engineering

Texas Department of Transportation
©2003 TEXAS TURNPIKE AUTHORITY DIVISION

DRAWING PREPARED BY: CRESPO CONSULTING SERVICES, INC.

SHEET 7 OF 12

FED. RD. DIV. NO.	FEDERAL AID PROJECT NO.			SHEET NO.
6	MG 2002 (243)			007
DSN LSS	STATE	DIST.	COUNTY	
CHK JSC	TEXAS	14	WILLIAMSON	
DWN SKF	CONT.	SECT.	JOB	HIGHWAY NO.
CHK JLL	0683	01	069	SH 45

Scale: 100.000000:1.000000
Plotted on: 17-APR-2003 17:43

Pen Table: X:\crespo\Active\SH45_2002\dgn\34801w.pen
Design Filename: X:\crespo\Active\SH45_2002\dgn\45wP0813.DGN

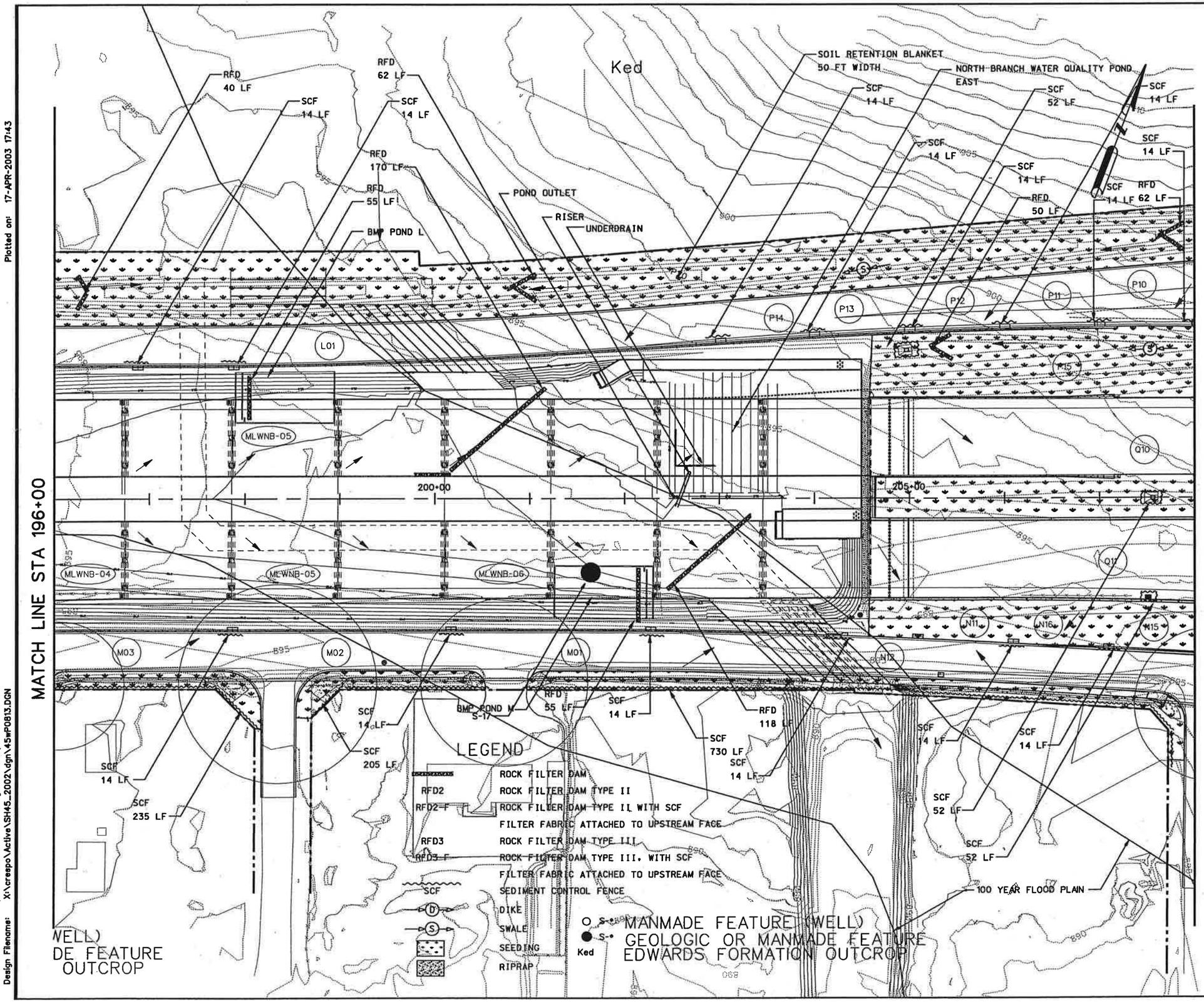

STATE HIGHWAY 45/US 183 INTERCHANGE
TEMPORARY EROSION CONTROL NOTES:

1. THE CONTRACTOR SHALL INSTALL ALL TEMPORARY AND PERMANENT EROSION CONTROL FEATURES AT THE EARLIEST TIME PRACTICABLE.

2. AREAS REQUIRING TEMPORARY SEEDING SHALL BE TREATED WITH CELLULOSE FIBER MULCH (ITEM 164).

3. SOIL RETENTION BLANKET (CL 2, TYPE F "FLEXIBLE CHANNEL LINER") SHALL BE PLACED A WIDTH OF 10 FEET ALONG ALL DITCH AND SWALE FLOWLINES AND AS SHOWN ADDITIONALLY ON THE PLANS.

4. SOIL RETENTION BLANKET (CL 1, TYPE C "VEGETATIVE MAT") SHALL BE PLACED ON ALL SLOPES GREATER THAN OR EQUAL TO 4:1, INCLUDING POND SIDE SLOPES.

5. SEDIMENT CONTROL FENCE (SCF) SHALL BE PLACED IN SUCH A MANNER TO INTERCEPT FLOW AT ALL INLETS AS SHOWN ON THE PLANS.

STATE OF TEXAS
L. STEPHEN STECHER
55645
LICENSED
PROFESSIONAL ENGINEER
4/17/03

WATER POLLUTION ABATEMENT PLAN

SH 45
STA 196+00 TO STA 208+00

SH 45 / US 183 INTERCHANGE

SCALE: PLAN 1":100'

HNTB ARCHITECTS ENGINEERS PLANNERS
The HNTB Companies

Crespo Consulting Services, Inc
Civil & Environmental Engineering

Texas Department of Transportation
©2003 TEXAS TURNPIKE AUTHORITY DIVISION

DRAWING PREPARED BY: CRESPO CONSULTING SERVICES, INC.

SHEET 8 OF 12

FED. RD. DIV. NO.	FEDERAL AID PROJECT NO.			SHEET NO.
6	MG 2002 (243)			008
DGN: LSS	STATE	DIST.	COUNTY	
CHK DSN: JSC	TEXAS	14	WILLIAMSON	
DWN: SKF	CONT.	SECT.	JOB	HIGHWAY NO.
CHK DFC: JLL	0683	01	069	SH 45

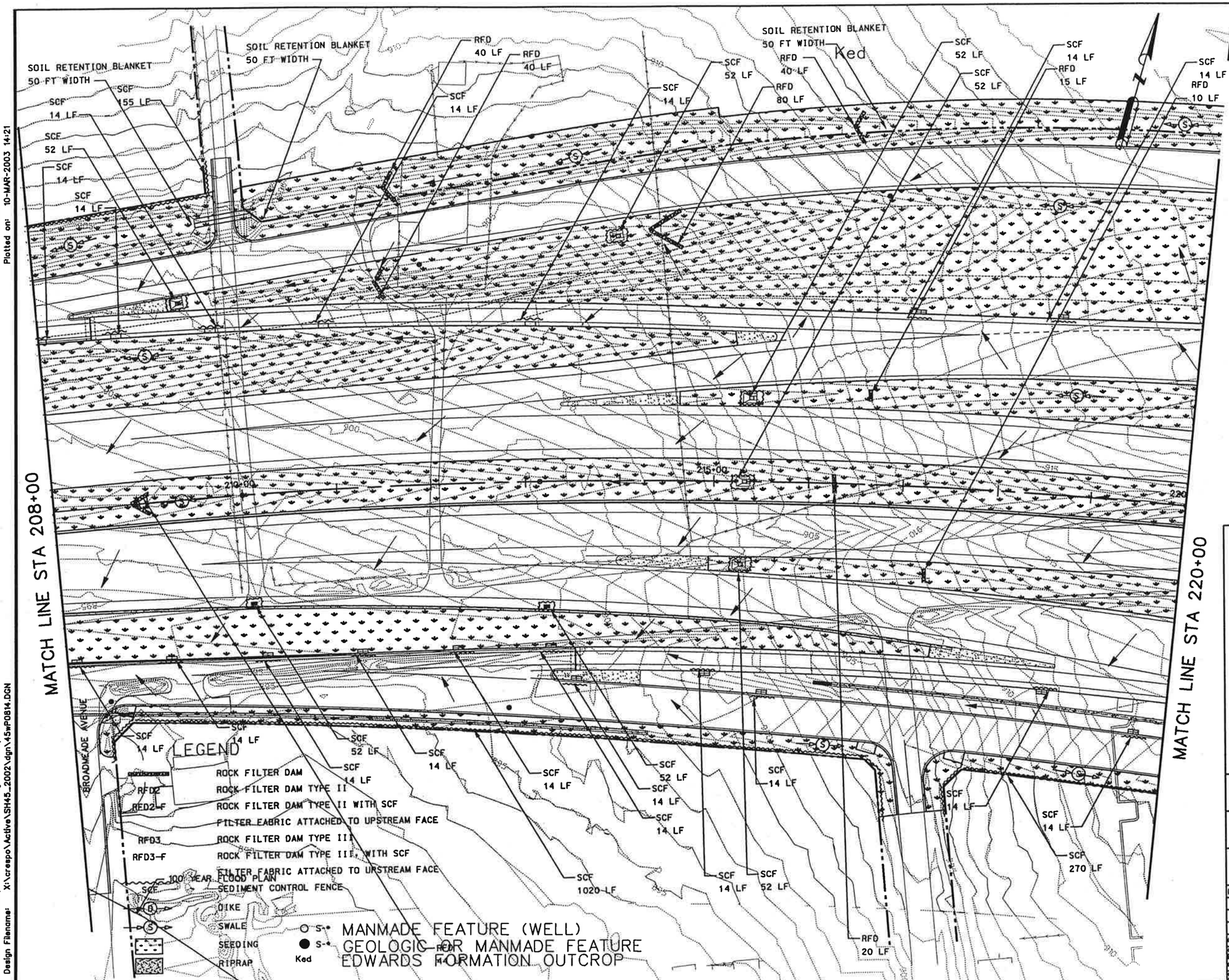

STATE HIGHWAY 45/US 183 INTERCHANGE
TEMPORARY EROSION CONTROL NOTES:

1. THE CONTRACTOR SHALL INSTALL ALL TEMPORARY AND PERMANENT EROSION CONTROL FEATURES AT THE EARLIEST TIME PRACTICABLE.

2. AREAS REQUIRING TEMPORARY SEEDING SHALL BE TREATED WITH CELLULOSE FIBER MULCH (ITEM 164).

3. SOIL RETENTION BLANKET (CL 2, TYPE F "FLEXIBLE CHANNEL LINER") SHALL BE PLACED A WIDTH OF 10 FEET ALONG ALL DITCH AND SWALE FLOWLINES AND AS SHOWN ADDITIONALLY ON THE PLANS.

4. SOIL RETENTION BLANKET (CL 1, TYPE C "VEGETATIVE MAT") SHALL BE PLACED ON ALL SLOPES GREATER THAN OR EQUAL TO 4:1, INCLUDING POND SIDE SLOPES.

5. SEDIMENT CONTROL FENCE (SCF) SHALL BE PLACED IN SUCH A MANNER TO INTERCEPT FLOW AT ALL INLETS AS SHOWN ON THE PLANS.

STATE OF TEXAS
L. STEPHEN STECHER
55645
LICENSED
PROFESSIONAL ENGINEER
3/11/03

WATER POLLUTION ABATEMENT PLAN

SH 45
STA 208+00 TO STA 220+00

SH 45 / US 183 INTERCHANGE

SCALE: PLAN 1":100'

HNTB ARCHITECTS ENGINEERS PLANNERS
The HNTB Companies

Crespo Consulting Services, Inc
Civil & Environmental Engineering

Texas Department of Transportation
©2003 TEXAS TURNPIKE AUTHORITY DIVISION

DRAWING PREPARED BY: CRESPO CONSULTING SERVICES, INC.

SHEET 9 OF 12

FED. RD. DIV. NO.	FEDERAL AID PROJECT NO.	SHEET NO.
6	MG 2002 (243)	009

DSGN: LSS	STATE	DIST.	COUNTY
CHK: JSC	TEXAS	14	WILLIAMSON
DWN: SKF	CONT.	SECT.	JOB / HIGHWAY NO.
CHK: JLL	0683	01	069 / SH 45

Scale: 100.000000:1.000000
Plotted on: 10-MAR-2003 14:21

Pen Table: X:\crespo\Active\SH45_2002\dgn\34601w.pen
Design Filename: X:\crespo\Active\SH45_2002\dgn\45wP0814.DGN

Scale: 100.000000:1.000000
Plotted on: 10-MAR-2003 14:22

Pen Table: X:\crespo\Active\SH45_2002\dgn\34601w.pen
Design Filename: X:\crespo\Active\SH45_2002\dgn\45wP0815.DGN

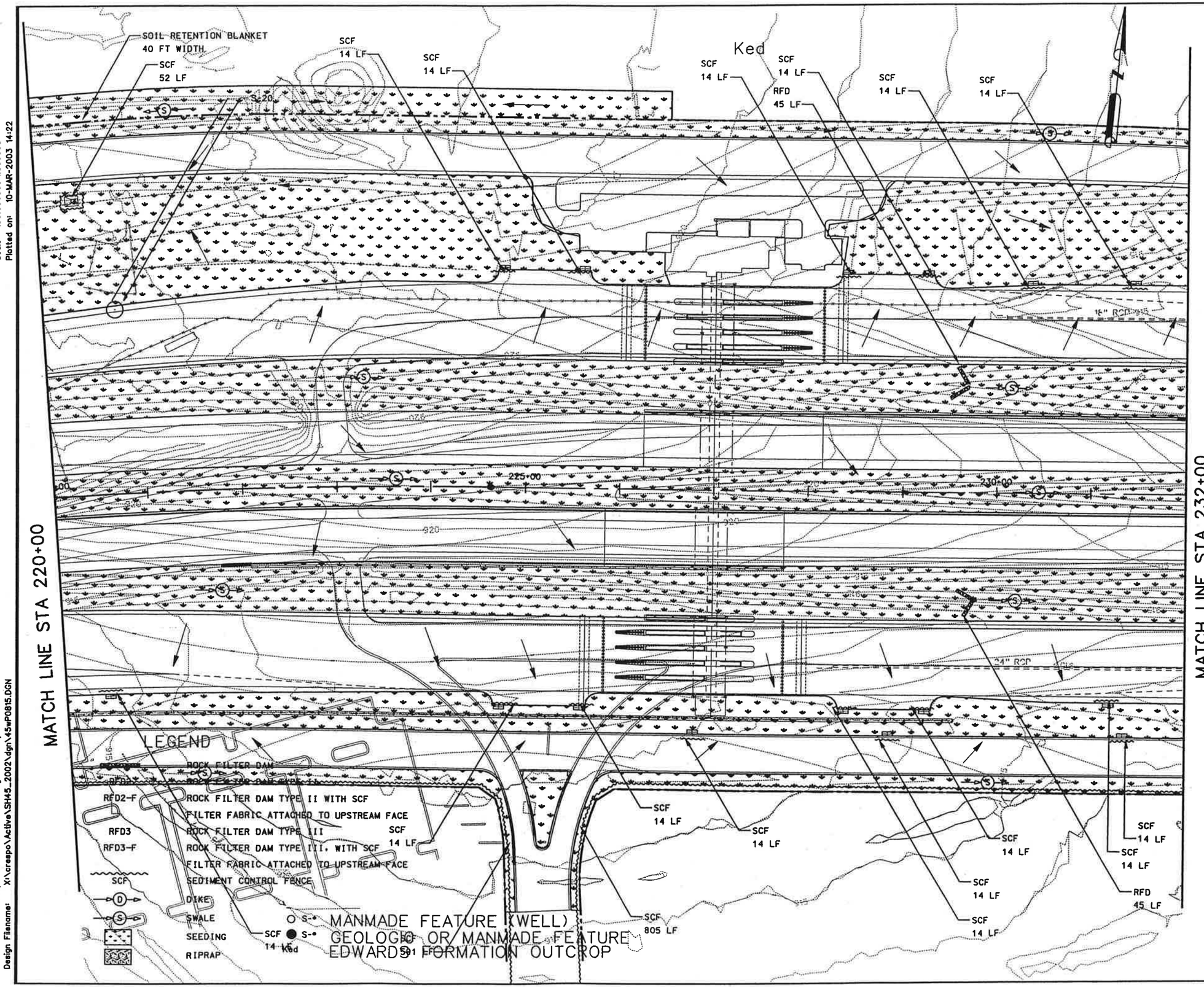

STATE HIGHWAY 45/US 183 INTERCHANGE
TEMPORARY EROSION CONTROL NOTES:

1. THE CONTRACTOR SHALL INSTALL ALL TEMPORARY AND PERMANENT EROSION CONTROL FEATURES AT THE EARLIEST TIME PRACTICABLE.

2. AREAS REQUIRING TEMPORARY SEEDING SHALL BE TREATED WITH CELLULOSE FIBER MULCH (ITEM 164).

3. SOIL RETENTION BLANKET (CL 2, TYPE F "FLEXIBLE CHANNEL LINER") SHALL BE PLACED A WIDTH OF 10 FEET ALONG ALL DITCH AND SWALE FLOWLINES AND AS SHOWN ADDITIONALLY ON THE PLANS.

4. SOIL RETENTION BLANKET (CL 1, TYPE C "VEGETATIVE MAT") SHALL BE PLACED ON ALL SLOPES GREATER THAN OR EQUAL TO 4:1, INCLUDING POND SIDE SLOPES.

5. SEDIMENT CONTROL FENCE (SCF) SHALL BE PLACED IN SUCH A MANNER TO INTERCEPT FLOW AT ALL INLETS AS SHOWN ON THE PLANS.

L. Stephen Stecher

STATE OF TEXAS
L. STEPHEN STECHER
55645
LICENSED
PROFESSIONAL ENGINEER

3/10/03

WATER POLLUTION ABATEMENT PLAN

SH 45
STA 220+00 TO STA 232+00

SH 45 / US 183 INTERCHANGE

SCALE: PLAN 1":100'

HNTB ARCHITECTS ENGINEERS PLANNERS
The HNTB Companies

Crespo Consulting Services, Inc
Civil & Environmental Engineering

Texas Department of Transportation
©2003 TEXAS TURNPIKE AUTHORITY DIVISION

DRAWING PREPARED BY: CRESPO CONSULTING SERVICES, INC.

SHEET 10 OF 12

FED. RD. DIV. NO.	FEDERAL AID PROJECT NO.			SHEET NO.
6	MC 2002 (243)			010
DSGN LSS	STATE	DIST.	COUNTY	
CHK DSGN JSC	TEXAS	14	WILLIAMSON	
DWN SKF	CONT.	SECT.	JOB	HIGHWAY NO.
CHK DWG JLL	0683	01	069	SH 45

Scale: 100.000000:1.000000
Plotted on: 10-MAR-2003 14:22

Pen Table: X:\crespo\Active\SH45_2002\dgn\34601w.pen
Design Filename: X:\crespo\Active\SH45_2002\dgn\45wP0816.DGN

MATCH LINE STA 232+00

MATCH LINE STA 244+00

SCF 14 LF
RFD 45 LF
SCF 14 LF
SCF 14 LF
RFD 64 LF
SCF 14 LF
SCF 52 LF
SCF 14 LF
Ked
SCF 1082 LF
RFD 65 LF
SCF 14 LF
SCF 14 LF
SCF 52 LF
SCF 14 LF
RFD 20 LF
SCF 52 LF
SCF 56 LF
SCF 14 LF
SCF 14 LF
SCF 14 LF
SCF 14 LF
SCF 14 LF
RFD 64 LF
SCF 14 LF
SCF 14 LF
SCF 439 LF
SCF 14 LF
SCF 14 LF
SCF 52 LF
RFD 68 LF
SCF 14 LF
SCF 52 LF
SCF 14 LF
RFD 68 LF
SCF 14 LF
SCF 14 LF
SCF 14 LF

"E" RCP
24" RCP
18" RCP
24" RCP
24" RCP
24" RCP
18" RCP
24" RCP

295+00
290+00
285+00
280+00
275+00

LEGEND

RFD2	ROCK FILTER DAM
RFD2-F	ROCK FILTER DAM TYPE II WITH SCF FILTER FABRIC ATTACHED TO UPSTREAM FACE
RFD3	ROCK FILTER DAM TYPE III
RFD3-F	ROCK FILTER DAM TYPE III, WITH SCF FILTER FABRIC ATTACHED TO UPSTREAM FACE
SCF	SEDIMENT CONTROL FENCE
D	DIKE
S	SWALE
	SEEDING
	RIPRAP
S-•	MANMADE FEATURE (WELL)
S-•	GEOLOGIC OR MANMADE FEATURE
Ked	EDWARDS FORMATION OUTCROP

STATE HIGHWAY 45/US 183 INTERCHANGE
TEMPORARY EROSION CONTROL NOTES:

1. THE CONTRACTOR SHALL INSTALL ALL TEMPORARY AND PERMANENT EROSION CONTROL FEATURES AT THE EARLIEST TIME PRACTICABLE.

2. AREAS REQUIRING TEMPORARY SEEDING SHALL BE TREATED WITH CELLULOSE FIBER MULCH (ITEM 164).

3. SOIL RETENTION BLANKET (CL 2, TYPE F "FLEXIBLE CHANNEL LINER") SHALL BE PLACED A WIDTH OF 10 FEET ALONG ALL DITCH AND SWALE FLOWLINES AND AS SHOWN ADDITIONALLY ON THE PLANS.

4. SOIL RETENTION BLANKET (CL 1, TYPE C "VEGETATIVE MAT") SHALL BE PLACED ON ALL SLOPES GREATER THAN OR EQUAL TO 4:1, INCLUDING POND SIDE SLOPES.

5. SEDIMENT CONTROL FENCE (SCF) SHALL BE PLACED IN SUCH A MANNER TO INTERCEPT FLOW AT ALL INLETS AS SHOWN ON THE PLANS.

L. Stephen Stecher

STATE OF TEXAS
L. STEPHEN STECHER
55645
LICENSED
PROFESSIONAL ENGINEER

3/11/03

WATER POLLUTION ABATEMENT PLAN

SH 45
STA 232+00 TO STA 244+00

SH 45 / US 183 INTERCHANGE

SCALE: PLAN 1":100'

HNTB ARCHITECTS ENGINEERS PLANNERS
The HNTB Companies

Crespo Consulting Services, Inc
Civil & Environmental Engineering

Texas Department of Transportation
©2003 TEXAS TURNPIKE AUTHORITY DIVISION

DRAWING PREPARED BY: CRESPO CONSULTING SERVICES, INC.

SHEET 11 OF 12

FED. RD. DIV. NO.	FEDERAL AID PROJECT NO.	SHEET NO.
6	MG 2002 (243)	011

DSGN LSS	STATE	DIST.	COUNTY	
CHK. DSGN. JSC	TEXAS	14	WILLIAMSON	
DWN SKF	CONT.	SECT.	JOB	HIGHWAY NO.
CHK. DWG. JLL	0683	01	069	SH 45

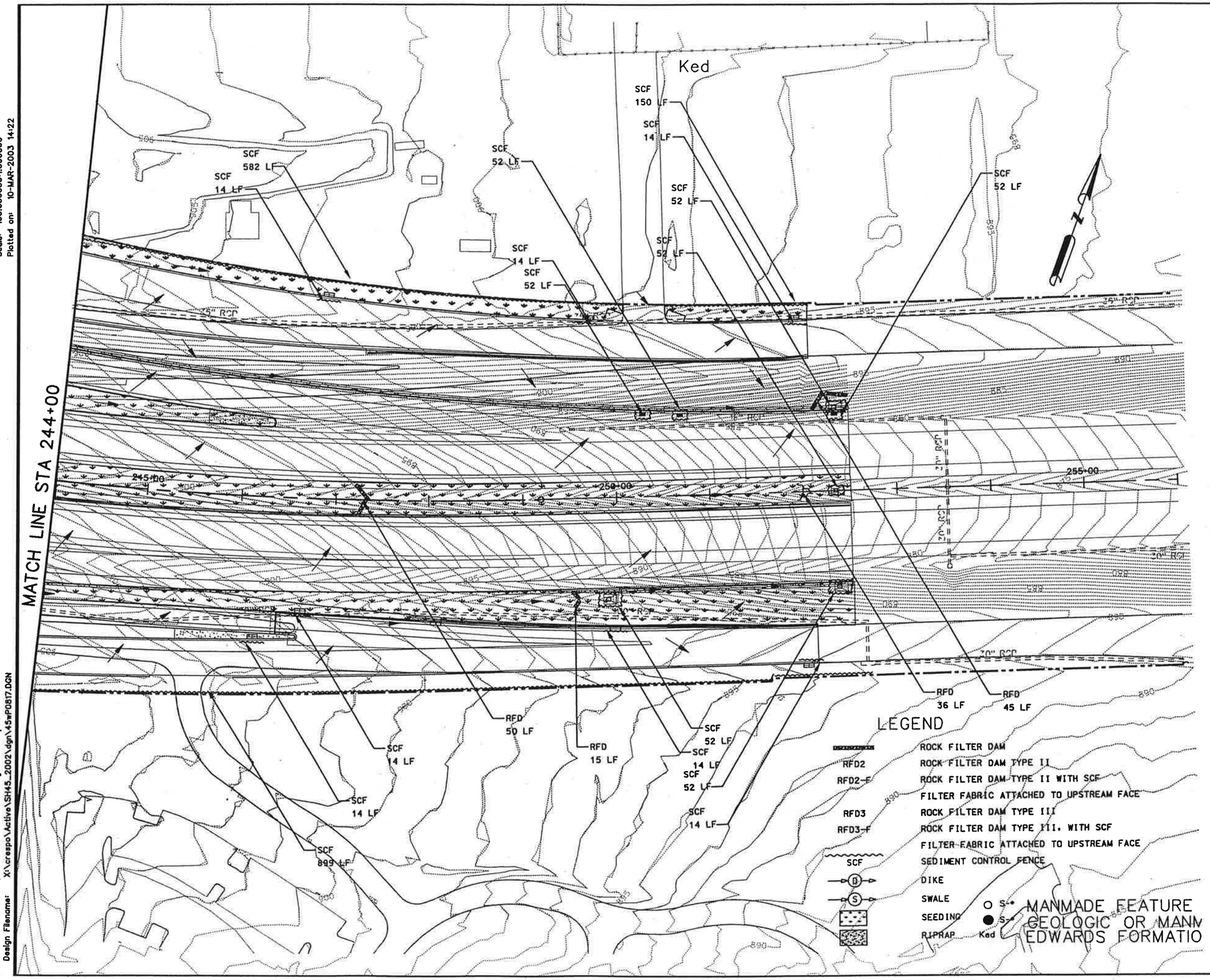

STATE HIGHWAY 45/US 183 INTERCHANGE
TEMPORARY EROSION CONTROL NOTES:

1. THE CONTRACTOR SHALL INSTALL ALL TEMPORARY AND PERMANENT EROSION CONTROL FEATURES AT THE EARLIEST TIME PRACTICABLE.

2. AREAS REQUIRING TEMPORARY SEEDING SHALL BE TREATED WITH CELLULOSE FIBER MULCH (ITEM 164).

3. SOIL RETENTION BLANKET (CL 2, TYPE F "FLEXIBLE CHANNEL LINER") SHALL BE PLACED A WIDTH OF 10 FEET ALONG ALL DITCH AND SWALE FLOWLINES AND AS SHOWN ADDITIONALLY ON THE PLANS.

4. SOIL RETENTION BLANKET (CL 1, TYPE C "VEGETATIVE MAT") SHALL BE PLACED ON ALL SLOPES GREATER THAN OR EQUAL TO 4:1, INCLUDING POND SIDE SLOPES.

5. SEDIMENT CONTROL FENCE (SCF) SHALL BE PLACED IN SUCH A MANNER TO INTERCEPT FLOW AT ALL INLETS AS SHOWN ON THE PLANS.

STATE OF TEXAS
L. STEPHEN STECHER
55645
LICENSED
PROFESSIONAL ENGINEER

3/11/03

WATER POLLUTION ABATEMENT PLAN

SH 45
STA 244+00 TO STA 256+00

SH 45 / US 183 INTERCHANGE

SCALE: PLAN 1":100'

HNTB ARCHITECTS ENGINEERS PLANNERS
The HNTB Companies

Crespo Consulting Services, Inc
Civil & Environmental Engineering

Texas Department of Transportation
©2003 TEXAS TURNPIKE AUTHORITY DIVISION

DRAWING PREPARED BY: CRESPO CONSULTING SERVICES, INC.

SHEET 12 OF 12

FED. RD. DIV. NO.	FEDERAL AID PROJECT NO.	SHEET NO.
6	MG 2002 (243)	012

DGN: LSS	STATE	DIST.	COUNTY	
CHK DGN: JSC	TEXAS	14	WILLIAMSON	
DWN: SKF	CONT.	SECT.	JOB	HIGHWAY NO.
CHK DWG: JLL	0683	01	069	SH 45

Scale: 100.000000:1.000000
Plotted on: 10-MAR-2003 14:22

Pen Table: X:\crespo\Active\SH45_2002\dgn\34601w.pen
Design Filename: X:\crespo\Active\SH45_2002\dgn\45wP0817.DGN

Scale: 100.000000:1.000000
Plotted on: 11-MAR-2003 16:50

Pen Table: X:\crespo\Active\SH45_2002\dgn\3460lw.pen
Design Filename: X:\crespo\Active\SH45_2002\dgn\83wp0804.dgn

MATCH LINE STA 826+00

MATCH LINE STA 838+00

SCF
60 LF

SCF
70 LF

SCF
60 LF

SCF
70 LF

RFD
20 LF

SCF
320 LF

SCF
80 LF

SCF
80 LF

SCF
465 LF

SCF
80 LF

SCF
80 LF

100 YEAR FLOOD PLAIN

ROCK FILTER DAM

ROCK FILTER DAM TYPE I

ROCK FILTER DAM TYPE I WITH SCF

FILTER FABRIC ATTACHED TO UPSTREAM FACE

ROCK FILTER DAM TYPE II

ROCK FILTER DAM TYPE II WITH SCF

FILTER FABRIC ATTACHED TO UPSTREAM FACE

SEDIMENT CONTROL FENCE

DIKE

SWALE

SEEDING

RIPRAP

MANMADE FEATURES (WELL)

GEOLOGIC OR MANMADE FEATURE

EDWARDS FORMATION OUTCROP

STATE HIGHWAY 45/US 183 INTERCHANGE
TEMPORARY EROSION CONTROL NOTES:

1. THE CONTRACTOR SHALL INSTALL ALL TEMPORARY AND PERMANENT EROSION CONTROL FEATURES AT THE EARLIEST TIME PRACTICABLE.

2. AREAS REQUIRING TEMPORARY SEEDING SHALL BE TREATED WITH CELLULOSE FIBER MULCH (ITEM 164).

3. SOIL RETENTION BLANKET (CL 2, TYPE F "FLEXIBLE CHANNEL LINER") SHALL BE PLACED A WIDTH OF 10 FEET ALONG ALL DITCH AND SWALE FLOWLINES AND AS SHOWN ADDITIONALLY ON THE PLANS.

4. SOIL RETENTION BLANKET (CL 1, TYPE C "VEGETATIVE MAT") SHALL BE PLACED ON ALL SLOPES GREATER THAN OR EQUAL TO 4:1, INCLUDING POND SIDE SLOPES.

5. SEDIMENT CONTROL FENCE (SCF) SHALL BE PLACED IN SUCH A MANNER TO INTERCEPT FLOW AT ALL INLETS AS SHOWN ON THE PLANS.

L. STEPHEN STECHER
55645
LICENSED
PROFESSIONAL ENGINEER
STATE OF TEXAS

3/11/03

WATER POLLUTION ABATEMENT PLAN

US 183
STA 826+00 TO STA 838+00

SH 45 / US 183 INTERCHANGE

SCALE: PLAN 1":100'

HNTB ARCHITECTS ENGINEERS PLANNERS
The HNTB Companies

Crespo Consulting Services, Inc
Civil & Environmental Engineering

Texas Department of Transportation
©2003 TEXAS TURNPIKE AUTHORITY DIVISION

DRAWING PREPARED BY: CRESPO CONSULTING SERVICES, INC.

SHEET 1 OF 3

FED. RD. DIV. NO.	FEDERAL AID PROJECT NO.			SHEET NO.
6	MG 2002 (243)			013
DGN: LSS	STATE	DIST.	COUNTY	
CHK: JSC	TEXAS	14	WILLIAMSON	
DWN: SKF	CONT.	SECT.	JOB	HIGHWAY NO.
CHK: JLL	0683	01	069	SH 45

Scale: 100.000000:1.000000
Plotted on: 10-MAR-2003 14:23

Pen Table: X:\crespo\Active\SH45_2002\dgn\34601w.pen
Design Filenames: X:\crespo\Active\SH45_2002\dgn\83wp0805.dgn

MATCH LINE STA 838+00

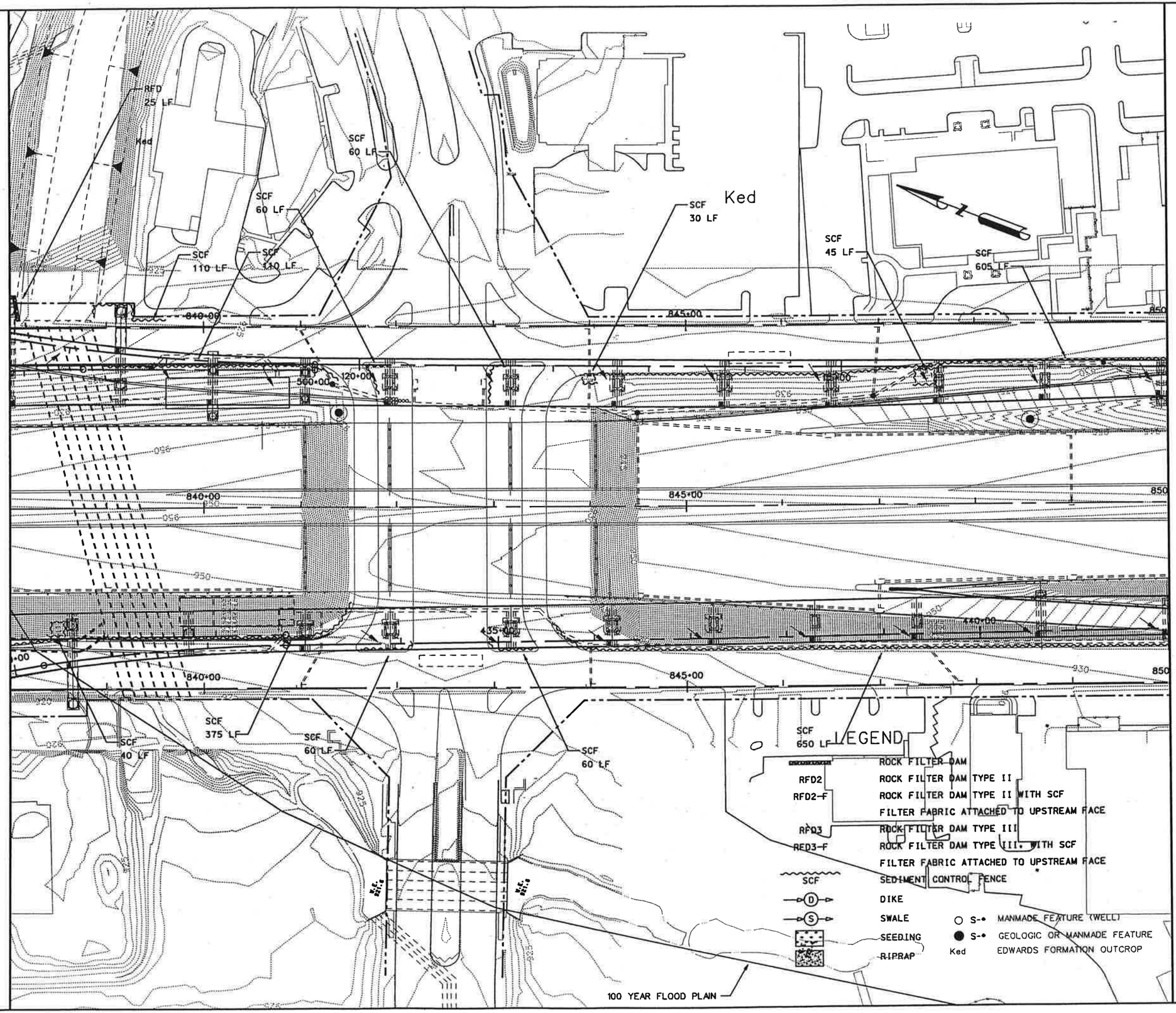

LEGEND

	ROCK FILTER DAM
RFD2	ROCK FILTER DAM TYPE II
RFD2-F	ROCK FILTER DAM TYPE II WITH SCF FILTER FABRIC ATTACHED TO UPSTREAM FACE
RFD3	ROCK FILTER DAM TYPE III
RFD3-F	ROCK FILTER DAM TYPE III WITH SCF FILTER FABRIC ATTACHED TO UPSTREAM FACE
SCF	SEDIMENT CONTROL FENCE
D	DIKE
S	SWALE
	SEEDING
	RIPRAP
S-•	MANMADE FEATURE (WELL)
S-•	GEOLOGIC OR MANMADE FEATURE
Ked	EDWARDS FORMATION OUTCROP

MATCH LINE STA 850+00

STATE HIGHWAY 45/US 183 INTERCHANGE
TEMPORARY EROSION CONTROL NOTES:

1. THE CONTRACTOR SHALL INSTALL ALL TEMPORARY AND PERMANENT EROSION CONTROL FEATURES AT THE EARLIEST TIME PRACTICABLE.

2. AREAS REQUIRING TEMPORARY SEEDING SHALL BE TREATED WITH CELLULOSE FIBER MULCH (ITEM 164).

3. SOIL RETENTION BLANKET (CL 2, TYPE F "FLEXIBLE CHANNEL LINER") SHALL BE PLACED A WIDTH OF 10 FEET ALONG ALL DITCH AND SWALE FLOWLINES AND AS SHOWN ADDITIONALLY ON THE PLANS.

4. SOIL RETENTION BLANKET (CL 1, TYPE C "VEGETATIVE MAT") SHALL BE PLACED ON ALL SLOPES GREATER THAN OR EQUAL TO 4:1, INCLUDING POND SIDE SLOPES.

5. SEDIMENT CONTROL FENCE (SCF) SHALL BE PLACED IN SUCH A MANNER TO INTERCEPT FLOW AT ALL INLETS AS SHOWN ON THE PLANS.

L. Stephen Stecher
STATE OF TEXAS
L. STEPHEN STECHER
55645
LICENSED
PROFESSIONAL ENGINEER
3/11/03

WATER POLLUTION ABATEMENT PLAN

US 183
STA 838+00 TO STA 850+00

SH 45 / US 183 INTERCHANGE

SCALE: PLAN 1":100'

HNTB ARCHITECTS ENGINEERS PLANNERS
The HNTB Companies

Crespo Consulting Services, Inc
Civil & Environmental Engineering

Texas Department of Transportation
©2003 TEXAS TURNPIKE AUTHORITY DIVISION

DRAWING PREPARED BY: CRESPO CONSULTING SERVICES, INC.

SHEET 2 OF 3

FED. RD. DIV. NO.	FEDERAL AID PROJECT NO.			SHEET NO.
6	MG 2002 (243)			014
DSGN LSS	STATE	DIST.	COUNTY	
CONST. JSC	TEXAS	14	WILLIAMSON	
DSGN SKF	CONT.	SECT.	JOB	HIGHWAY NO.
CHK. JLL	0683	01	069	SH 45

Scale: 100.000000:1.000000
Plotted on: 10-MAR-2003 14:23

Pen Table: X:\crespo\Active\SH45_2002\dgn\34601w.pen
Design Filename: X:\crespo\Active\SH45_2002\dgn\83wp0806.dgn

MATCH LINE STA 850+00

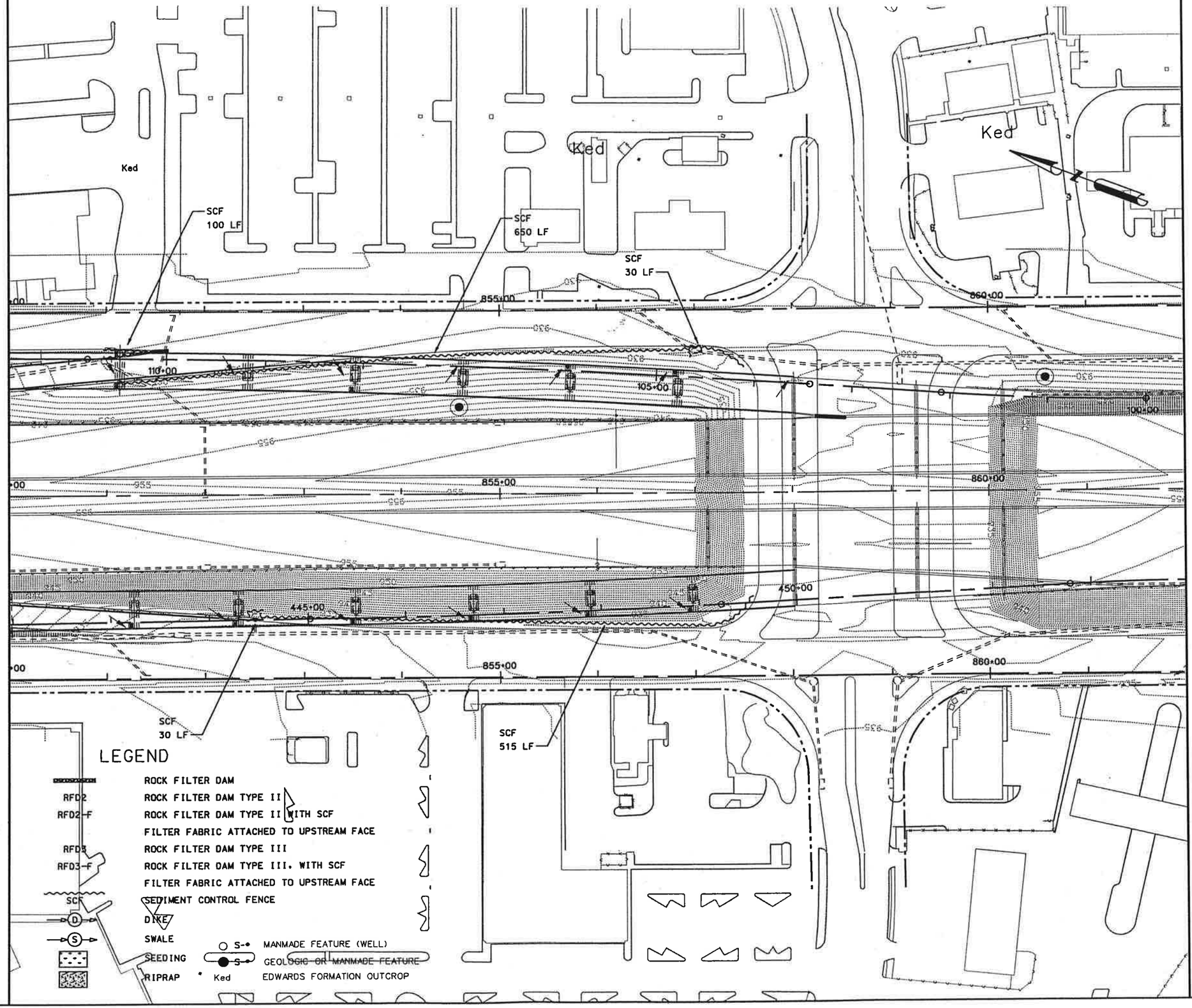

MATCH LINE STA 862+00

LEGEND

	ROCK FILTER DAM
RFD2	ROCK FILTER DAM TYPE II
RFD2-F	ROCK FILTER DAM TYPE II WITH SCF FILTER FABRIC ATTACHED TO UPSTREAM FACE
RFD3	ROCK FILTER DAM TYPE III
RFD3-F	ROCK FILTER DAM TYPE III. WITH SCF FILTER FABRIC ATTACHED TO UPSTREAM FACE
SCF	SEDIMENT CONTROL FENCE
D	DIKE
S	SWALE
	SEEDING
	RIPRAP
S-	MANMADE FEATURE (WELL)
S-	GEOLOGIC OR MANMADE FEATURE
Ked	EDWARDS FORMATION OUTCROP

STATE HIGHWAY 45/US 183 INTERCHANGE
TEMPORARY EROSION CONTROL NOTES:

1. THE CONTRACTOR SHALL INSTALL ALL TEMPORARY AND PERMANENT EROSION CONTROL FEATURES AT THE EARLIEST TIME PRACTICABLE.

2. AREAS REQUIRING TEMPORARY SEEDING SHALL BE TREATED WITH CELLULOSE FIBER MULCH (ITEM 164).

3. SOIL RETENTION BLANKET (CL 2, TYPE F "FLEXIBLE CHANNEL LINER") SHALL BE PLACED A WIDTH OF 10 FEET ALONG ALL DITCH AND SWALE FLOWLINES AND AS SHOWN ADDITIONALLY ON THE PLANS.

4. SOIL RETENTION BLANKET (CL 1, TYPE C "VEGETATIVE MAT") SHALL BE PLACED ON ALL SLOPES GREATER THAN OR EQUAL TO 4:1, INCLUDING POND SIDE SLOPES.

5. SEDIMENT CONTROL FENCE (SCF) SHALL BE PLACED IN SUCH A MANNER TO INTERCEPT FLOW AT ALL INLETS AS SHOWN ON THE PLANS.

STATE OF TEXAS
L. STEPHEN STECHER
55645
LICENSED
PROFESSIONAL ENGINEER

WATER POLLUTION ABATEMENT PLAN

US 183
STA 850+00TO STA 862+00

SH 45 / US 183 INTERCHANGE

SCALE: PLAN 1":100'

HNTB ARCHITECTS ENGINEERS PLANNERS
The HNTB Companies

Crespo Consulting Services, Inc
Civil & Environmental Engineering

Texas Department of Transportation
©2003 TEXAS TURNPIKE AUTHORITY DIVISION

DRAWING PREPARED BY: CRESPO CONSULTING SERVICES, INC.

SHEET 3 OF 3

FED. RD. DIV. NO.	FEDERAL AID PROJECT NO.	SHEET NO.
6	MG 2002 (243)	015

	STATE	DIST.	COUNTY
DSN: LSS			
CHK: JSC	TEXAS	14	WILLIAMSON
DWN: SKF	CONT.	SECT.	JOB / HIGHWAY NO.
CHK: JLL	0683	01	069 / SH 45

Scale: 20.434739:1.000000
Plotted on: 10-MAR-2003 14:23

Pen Table: X:\crespo\Active\SH45_2002\dgn\3460tw.pen
Design Filename: X:\crespo\Active\SH45_2002\dgn\wpqdet1.dgn

RISER AND DRAIN DETAIL

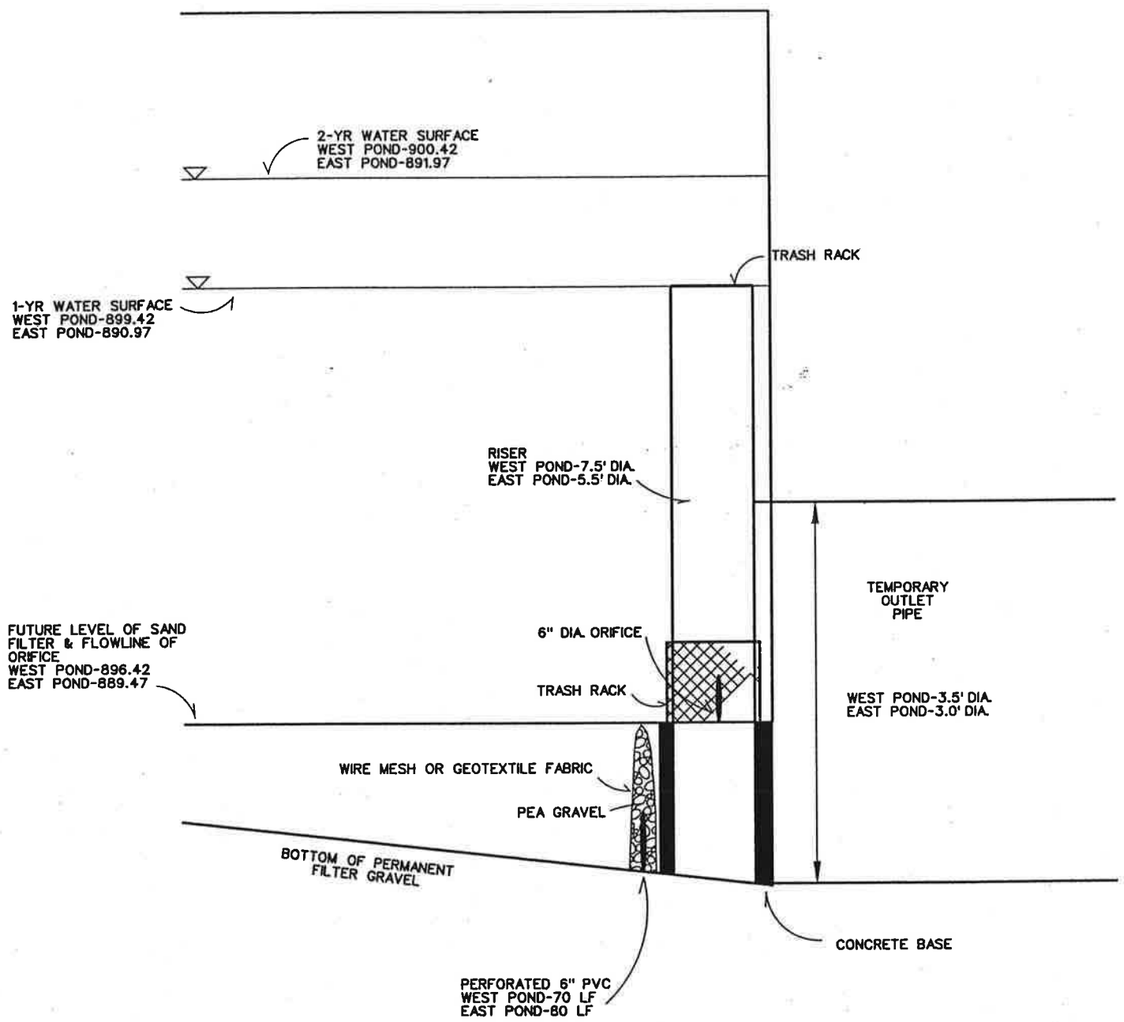

NOT TO SCALE

TEMPORARY SEDIMENTATION POND NOTES

1. INSTALLATION OF THE TEMPORARY SEDIMENTATION PONDS SHALL OCCUR AT THE EARLIEST DATE WITHIN THE CONTAINING WALLS OF THE PERMANENT SEDIMENTATION/FILTRATION PONDS, BUT PRIOR TO INSTALLATION OF GABIONS SEPARATING THE SEDIMENTATION AND FILTRATION AREAS AND THE PERMENENT FILTER, INCLUDING THE SAND, GRAVEL AND UNDERDRAINS. IMMEDIATELY PRIOR TO COMPLETION OF THE PERMANENT SEDIMENTATION/FILTRATION PONDS, THE TEMPORARY RISER, OUTLET, GRAVEL WRAP AND TEMPORARY PERFORATED PIPE SHALL BE REMOVED AND THE OUTLET PIPE SEALED.

2. TRASH RACK ON TOP OF RISER SHALL CONSIST OF 4 INCH BY 4 INCH WELDED WIRE FABRIC, OR EQUIVALENT, SECURELY ATTACHED TO THE RISER WITH FRAMES AND SUPPORTS. THE TRASH RACK SHALL FULLY COVER THE OPENING AT THE TOP OF THE RISER.

3. TRASH RACK OVER THE ORIFICE SHALL CONSIST OF 3 INCH BY 3 INCH WELDED WIRE FABRIC, OR EQUIVALENT, SECURELY ATTACHED TO THE RISER WITH FRAMES AND SUPPORTS. THE TRASH RACK SHALL FULLY COVER THE OPENING, EXTEND AT LEAST 1 FOOT ABOVE AND TO EITHER SIDE OF THE ORIFICE (MIN. 1.5' H x 2.5' W) AND PROJECT OUT FROM THE SURFACE OF THE OPENING APPROXIMATELY 3 INCHES.

4. SEDIMENT SHALL BE REMOVED FROM THE POND WHEN THE POND VOLUME HAS BEEN REDUCED BY 50% OR WHENEVER THE SEDIMENT BUILDS UP TO THE LEVEL OF THE BOTTOM OF THE ORIFICE, WHICHEVER IS LESS.

5. THE PERFORATED 6" PVC PIPE SHALL BE INSTALLED TO ALLOW DRAINAGE FROM THE TEMPORARY SEDIMENTATION POND.

6. THE GRAVEL WRAP AROUND THE PERFORATED PIPE SHALL CONSIST OF PEA GRAVEL WITH A WIRE MESH OR GEOTEXTILE FABRIC WRAP. THE MESH OR FABRIC SHALL BE SECURED TO CONTAIN THE GRAVEL. THE OPENINGS IN THE MESH OR FABRIC SHOULD BE APPROXIMATELY 1/8 INCH TO 1/4 INCH IN SIZE, SUCH THAT THE PEA GRAVEL IS CONTAINED AND THE FREE FLOW OF WATER IS ALLOWED.

STATE OF TEXAS
L. STEPHEN STECHER
55645
LICENSED
PROFESSIONAL ENGINEER
3/10/03

WATER POLLUTION ABATEMENT PLAN

TEMPORARY SEDIMENTATION POND OUTLETS FOR NORTH BRANCH WATER QUALITY PONDS EAST AND WEST

SH 45 / US 183 INTERCHANGE

HNTB ARCHITECTS ENGINEERS PLANNERS
The HNTB Companies

Crespo Consulting Services, Inc
Civil & Environmental Engineering

Texas Department of Transportation
©2003 TEXAS TURNPIKE AUTHORITY DIVISION

DRAWING PREPARED BY: CRESPO CONSULTING SERVICES, INC.

FED. RD. DIV. NO.	FEDERAL AID PROJECT NO.			SHEET NO.
6	MG 2002 (243)			16
DSGN: LSS	STATE	DIST.	COUNTY	
CHK. DSGN: JSC	TEXAS	14	WILLIAMSON	
DRWN: SKF	CONT.	SECT.	JOB	HIGHWAY NO.
CHK. DRWN: JLL	0683	01	069	SH 45

Scale= 200.000000:1.000000
Plotted on: 17-FEB-2003 12:20
Pen Table: I:\Jobs\32058\techprod\rdwy\plots\32058h.pen
Design Filename: \\samwoo\pmwork\Jobs\32058\TECHPROD\UTIL\WPAP\dwgs\wpapcv08.dgn

COUNTY _____ PROJ. NO. _____
HWY. NO. _____ LETTING DATE _____
DATE ACCEPTED _____

LETTING DATE:	FED. RD. DIV. NO.	FEDERAL AID PROJECT NO.		SHEET NO.
WORK BEGAN:	6	MG 2002(243)		1
DATE ACCEPTED:	STATE	STATE DIST. NO.	COUNTY	
CONTRACTOR:	TEXAS	14	WILLIAMSON	
TOTAL COST:	CONT.	SECT.	JOB	HIGHWAY NO.
	683	01	069	SH 45

STATE OF TEXAS
DEPARTMENT OF TRANSPORTATION

PLANS OF PROPOSED
STATE HIGHWAY IMPROVEMENTS

FEDERAL-AID PROJECT
SH 45
WILLIAMSON COUNTY
PROJECT NO. MG 2002(243)

DESIGN SPEEDS	
MAIN LANES	70 MPH
FRONTAGE ROADS/CONNECTOR RAMPS	40 MPH
RAMPS	45 MPH

AREA OF DISTURBED SOIL = 238 ACRES

CONTROL CSJ = 0683-01-069
NET LENGTH OF ROADWAY = 8517.54 FT = 1.623 MI
NET LENGTH OF BRIDGE = 4642.25 FT = 0.884 MI
NET LENGTH OF PROJECT = 13159.79 FT = 2.507 MI

LIMITS: FROM RIDGELINE TO WEST OF PARMER LANE.

FOR THE CONSTRUCTION OF AN INTERCHANGE FACILITY.
CONSISTING OF GRADING, DRAINAGE, STRUCTURES, PAVEMENT, RETAINING WALLS, SIGNING, STRIPING, AND TRAFFIC SIGNALS.

WPAP
CHAPTER 8
ATTACHMENT

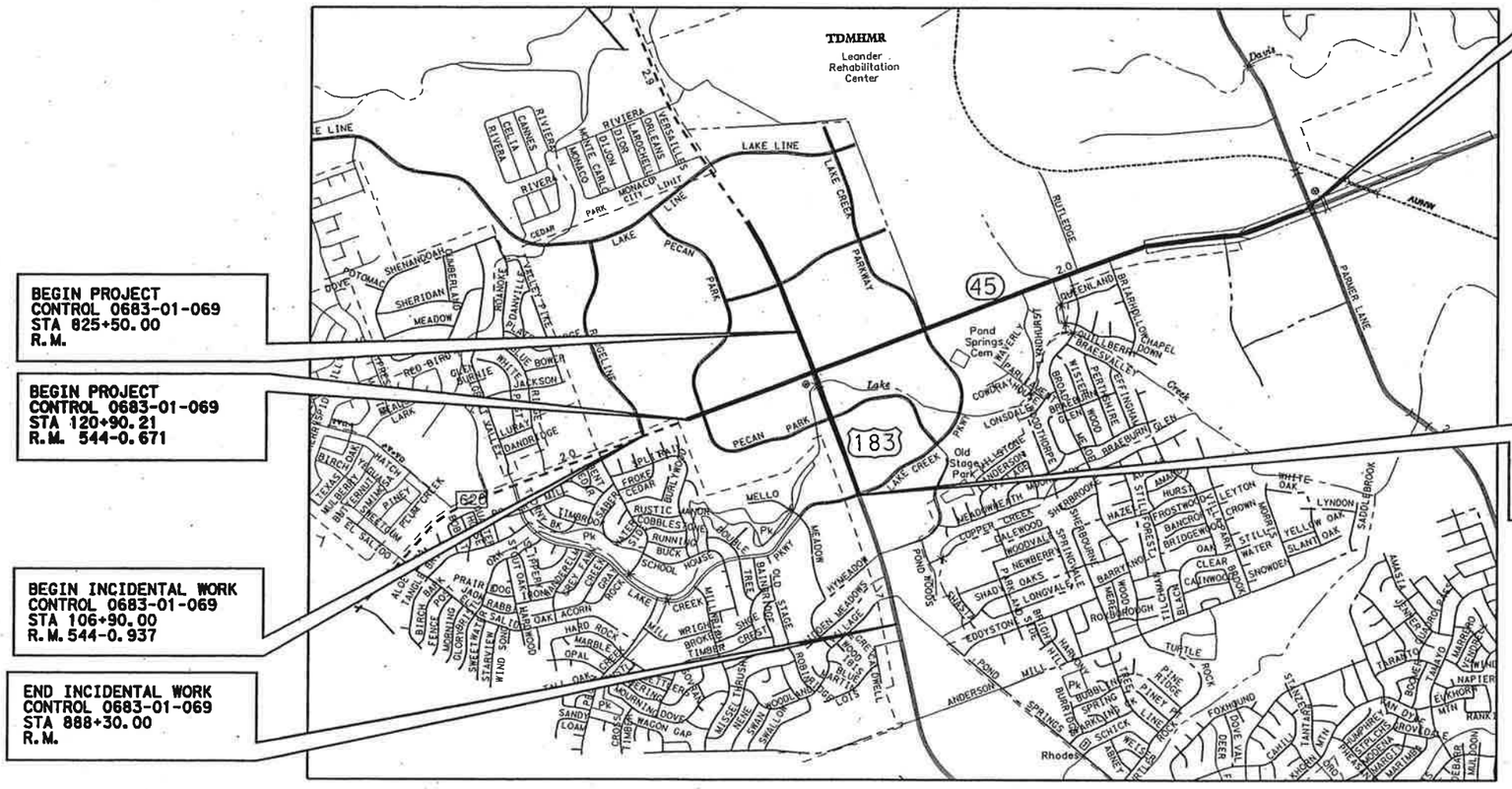

NO SCALE

ATTACHMENT NO. 1-99 TO SPECIAL AGREEMENT FOR CONSTRUCTION, MAINTENANCE AND OPERATIONS OF CONTINUOUS HIGHWAY ILLUMINATION SYSTEM, DATE: DECEMBER 2, 1983.

APPROVED BY
CITY OF AUSTIN _____ 19 ____

EQUATIONS: NONE
EXCEPTIONS: NONE
RAILROADS: NONE

TDLR INSPECTION REQUIRED

SPECIFICATIONS ADOPTED BY THE TEXAS DEPARTMENT OF TRANSPORTATION, MARCH 1, 1993 AND SPECIFICATION ITEMS LISTED AND DATED AS FOLLOWS, SHALL GOVERN ON THIS PROJECT: REQUIRED CONTRACT PROVISIONS FOR ALL FEDERAL-AID CONSTRUCTION CONTRACTS (FORM FHWA 1273, DEC. 1993).

PREPARED BY:
HNTB CORPORATION (DESIGN CONSULTANT)

Charles A. Dodge, P.E.
Project Manager — DATE

RECOMMENDED BY
TURNER COLLIE AND BRADEN, INC.

PROJECT MANAGER — DATE

RECOMMENDED BY:
TEXAS DEPARTMENT OF TRANSPORTATION

DIRECTOR OF ENGINEERING
TEXAS TURNPIKE AUTHORITY DIVISION — DATE

APPROVED BY:
TEXAS DEPARTMENT OF TRANSPORTATION

EXECUTIVE DIRECTOR
TEXAS TURNPIKE AUTHORITY DIVISION — DATE

RECOMMENDED BY:
TEXAS DEPARTMENT OF TRANSPORTATION

DIRECTOR OF DESIGN — DATE

Texas Department of Transportation
© 2003 (512)416-2055: ALL RIGHTS RESERVED

FED. RD. DIV. NO.	FEDERAL AID PROJECT NO.		SHEET NO.
6	MG 2002(243)		A1
STATE	STATE DIST. NO.	COUNTY	
TEXAS	14	WILLIAMSON	
CONT.	SECT.	JOB	HIGHWAY NO.
683	01	069	SH 45

CITY OF AUSTIN, TEXAS
WATER AND WASTEWATER UTILITY

INDEX OF SHEETS

SHEET NO.	DESCRIPTION
A1	TITLE SHEET
A2-A5	SUMMARY OF WATER/WASTEWATER QUANTITIES
A6	GENERAL NOTES
A7-A8	ENVIRONMENTAL NOTES
A9-A11	SCS NOTES
A12-A13	WATER/WASTEWATER PHASING NARRITIVES
A14-A17	WATER/WASTEWATER DISTRIBUTION LAYOUTS
A18-A23	WATER DISTRIBUTION LAYOUTS
A24-A31	WATER DISTRIBUTION INTERSECTION LAYOUTS
A32-A37	WASTEWATER COLLECTION LAYOUTS
A38-A41	EROSION & SEDIMENTATION CONTROL PLANS
A42	WATER LINE "A" PLAN & PROFILE
A43	WATER LINE "B" PLAN & PROFILE
A44-A45	WATER LINE "C" & "C-1" PLAN & PROFILE
A46-A48	WATER LINE "D" PLAN & PROFILE
A49-A55	WATER LINE "D-1" PLAN & PROFILE
A56-A57	WATER LINE "D-2" PLAN & PROFILE
A58-A61	WASTEWATER LINE "A" PLAN & PROFILE
A62	EROSION & SEDIMENTATION CONTROL DETAILS
A63-A70	WATER STANDARDS
A71-A73	WASTEWATER STANDARDS
74	TRENCHING & TREE PROTECTION STANDARDS

SH 45/ US 183 INTERCHANGE
SECTION 8

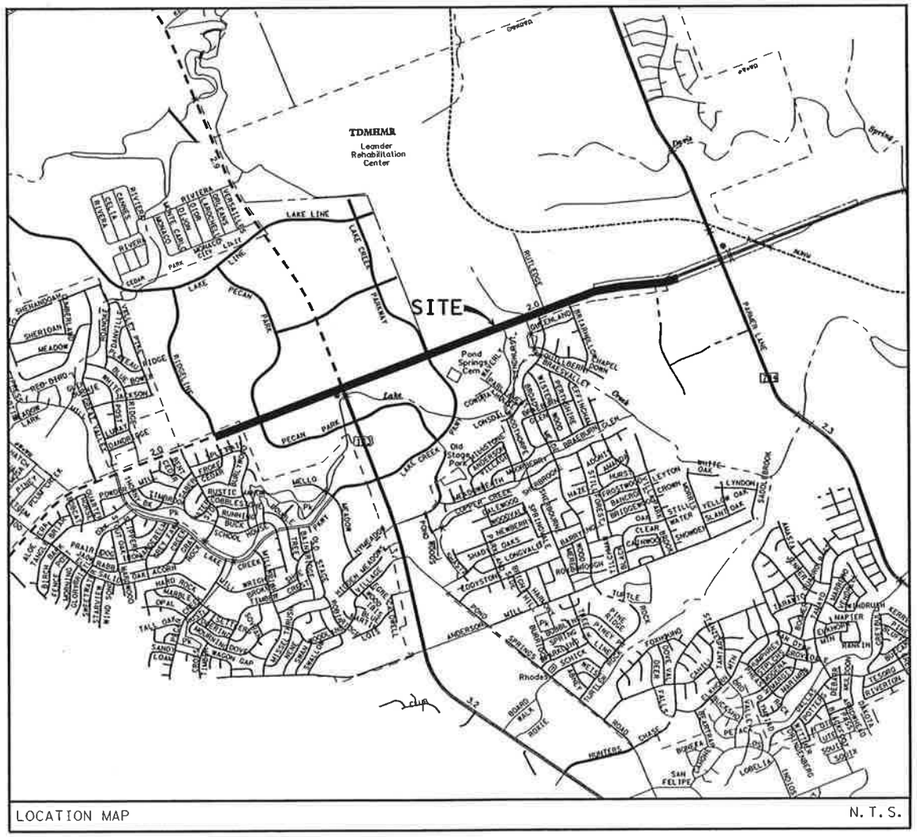

LOCATION MAP N. T. S.

PROJECT INFORMATION:

STREET ADDRESS:
SH 45
AUSTIN, TEXAS

OWNER:
CITY OF AUSTIN

CONTACT:

SUBMITTAL PREPARED BY:

HNTB CORPORATION
1701 DIRECTORS BLVD. SUITE 770
AUSTIN, TX 78744
CONTACT:
MR. CHARLES A. DODGE, P.E.
PHONE:
(512) 447-5590

APPROVALS:

REVIEWED BY:

TRANSPORTATION AND NATURAL RESOURCES DEPT. DATE

WILLIAMSON COUNTY DEVELOPMENT PERMIT #

WILLIAMSON COUNTY DEVELOPMENT PERMIT #

APPROVED BY:

TEXAS DEPARTMENT OF TRANSPORTATION DATE

WATER/WASTEWATER (CITY OF AUSTIN) DATE

WATER (N. AUSTIN MUD) DATE

APPROVED:

FOR DEVELOPMENT REVIEW AND INSPECTION DEPARTMENT DATE

SITE PLAN/DEVELOPMENT PERMIT NUMBER

PRESSURE ZONE

CORRECTIONS RECORD

No.	DESCRIPTION	CORRECT (C) ADD (A) VOID (V) SHEET Nos.	TOTAL No. SHEETS IN CORRECTION PLAN SET	CITY OF AUSTIN APPROVAL/DATE	DATE IMAGED

ALL RESPONSIBILITY FOR THE ADEQUACY OF THESES PLANS REMAINS WITH THE ENGINEER: APPROVAL OF THESE PLANS BY THE CITY OF AUSTIN DOES NOT REMOVE THESE RESPONSIBILITIES.

REVIEWED BY THE WATER & WASTEWATER UTILITY APPLIES ONLY TO FACILITIES WITHIN PUBLIC STREETS OR PUBLIC UTILITY EASEMENTS ALL OTHER WATER AND WASTEWATER FACILITIES INSIDE PRIVATE PROPERTY ARE UNDER THE JURISDICTION OF BUILDING INSPECTIONS.

Inspection Notice:
Please contact Public works, Construction Inspection Division at for arrangements for payment of inspection fees and job assignment for inspection of the public utilities related to this site. Inspection fees must be paid before any pre-construction meeting can be held.

Scale: 50.000000:1.000000
Plotted on: 14-MAR-2003 11:42
Pen Table: I:\Jobs\32058\techprod\UTIL\plots\32058uh.pen
Design Filename: I:\Jobs\32058\TECHPROD\Util\Dwg\ph1\45wuq0801.dgn

SUMMARY OF WATERLINES

ITEM	WL-1	WL-2	WL-3	WL-4	WL-5	WL-6	WL-7	WL-8	WL-9	WL-10	WL-11	WL-12	WL-13	WL-14	WL-15	WL-16	WL-17	WL-18
DESCR CODE																		
DESCRIPTION	6" WATER LINE	8" WATER LINE	12" WATER LINE	16" WATER LINE	24" WATER LINE	30" WATER LINE	48" WATER LINE	6" DI FITTINGS	8" DI FITTINGS	12" DI FITTINGS	16" DI FITTINGS	24" DI FITTINGS	30" DI FITTINGS	48" DI FITTINGS	12" BORE & ENCSMNT	24" BORE & ENCSMNT	36" BORE & ENCSMNT	48" BORE & ENCSMNT
UNIT	LF	LF	LF	LF	LF	LF	LF	TONS	TONS	TONS	TONS	TONS	TONS	TONS	LF	LF	LF	LF
SHEET # A-42			124.69					0.01		0.43						88.00		
SHEET # A-43					5.00	432.50	43.00											100.00
SHEET # A-44	16.00		474.87							0.48								
SHEET # A-45	4.00		346.74	24.40				0.04		1.07	0.36							
SHEET # A-46	8.00				469.17			0.04		0.04		2.05					15.00	
SHEET # A-47	6.00	6.00			475.00				0.02			1.15					33.00	
SHEET # A-48	8.00				118.66			0.04				1.48						
SHEET # A-49		10.00		474.00					0.08		0.52					42.00		
SHEET # A-50	8.00	4.00		472.50				0.04	0.02		0.62							
SHEET # A-51	8.00	12.00		470.83				0.04	0.02		0.93					125.00		
SHEET # A-52	8.00			475.83				0.04			0.31							
SHEET # A-53	8.00			475.83				0.04			0.31							
SHEET # A-54	6.00			473.33							0.75					108.00		
SHEET # A-55		6.00		85.83					0.02		1.00							
SHEET # A-56					476.00													
SHEET # A-57					124.17							0.59						
TOTALS	80.00	38.00	946.30	2952.55	1668.00	432.50	43.00	0.29	0.16	2.02	4.83	5.27	0.00	0.00	0.00	363.00	48.00	100.00

NO.	DATE	BY	REVSION

SUMMARY OF WATER/WASTEWATER QUANTITIES

SH 45 / US 183 INTERCHANGE

HNTB ARCHITECTS ENGINEERS PLANNERS
The HNTB Companies

Texas Department of Transportation

© 2003 TEXAS TURNPIKE AUTHORITY DIVISION

DRAWING PREPARED BY: HNTB CORPORATION				CITY OF AUSTIN SHEET NO.
SHEET 1 OF 4				A2
FED. RD. DIV. NO.	FEDERAL AID PROJECT NO.			SHEET NO.
6	MG 2002 (243)			49
DGN:	STATE	DIST.	COUNTY	
CHK. DGN:	TEXAS	14	WILLIAMSON	
DWG:	CONT.	SECT.	JOB	HIGHWAY NO.
CHK. DWG:	0683	01	069	SH 45

Scale: 50.000000:1.000000
Plotted on: 14-MAR-2003 11:43
Pen Table: I:\jobs\32058\techprod\UTIL\plots\32058uh.pen
Design Filename: I:\jobs\32058\TECHPROD\UTIL\DWG\phs1\45wuq0802.dgn

SUMMARY OF WATERLINES

ITEM	WL-21	WL-22	WL-23	WL-24	WL-25	WL-26	WL-27	WL-28	WL-29	WL-30	WL-31	WL-32	WL-33	WL-34	WL-35	WL-36	WL-37	WL-38	WL-39
DESCR CODE																			
DESCRIPTION	24" ENCSMNT	36" ENCSMNT	48" ENCSMNT	6" GATE VALVE	8" GATE VALVE	12" GATE VALVE	16" GATE VALVE	24" GATE VALVE	30" GATE VALVE	48" GATE VALVE	FIRE PROTEC-TION	REMOVE FIRE HYDRANT	FIRE HYDRANT ASSEMBLY	ABANDON EXISTING WL-12"	ABANDON EXISTING WL-16"	ABANDON EXISTING WL-24"	ABANDON EXISTING WL-30"	REM & REPLACE PVMT	AIR RELEASE VALVE 2"
UNIT	LF	LF	LF	EA	EA	EA	EA	EA	EA	EA	EA	EA	EA	LF	LF	LF	LF	SF	EA
SHEET # A-42						2	2				2	1		125				96	
SHEET # A-43			267.00					1	2	1							375		
SHEET # A-44				2		2							2						
SHEET # A-45				1		3	2						1						
SHEET # A-46		124.00		1		1		1				1	1			480			
SHEET # A-47				1	1								1			480			
SHEET # A-48				1				1					1		300	360			
SHEET # A-49					1		1							150					
SHEET # A-50				1	1		1					1	1		480				1
SHEET # A-51				1	2		1						1		480				
SHEET # A-52				1			1						1		480				
SHEET # A-53				1			1						1		480				
SHEET # A-54				1			2						1		480				
SHEET # A-55					1		1								100				
SHEET # A-56		475.00														410			
SHEET # A-57		120.00						1											
TOTALS	0.00	719.00	267.00	11	6	8	12	4	2	1	2	3	11	275	2800	1730	375	96	1

NO.	DATE	BY	REVSION

SUMMARY OF WATER/WASTEWATER QUANTITIES

SH 45 / US 183 INTERCHANGE

HNTB ARCHITECTS ENGINEERS PLANNERS
The HNTB Companies

Texas Department of Transportation
© 2003 TEXAS TURNPIKE AUTHORITY DIVISION

DRAWING PREPARED BY: HNTB CORPORATION				CITY OF AUSTIN SHEET NO.
SHEET 2 OF 4				A3
FED. RD. DIV. NO.	FEDERAL AID PROJECT NO.			SHEET NO.
6	MG 2002 (243)			50
DGN:	STATE	DIST.	COUNTY	
CHK DGN:	TEXAS	14	WILLIAMSON	
DWG:	CONT.	SECT.	JOB	HIGHWAY NO.
CHK DWG:	0683	01	069	SH 45

Scale: 50.000000:1.000000
Plotted on: 14-MAR-2003 11:43
Pen Table: I:\Jobs\32058\techprod\UTIL\plots\32058uh.pen
Design Filename: I:\Jobs\32058\TECHPROD\Util\Dwg\phs1\45swqa0803.dgn

SUMMARY OF WATERLINES

ITEM	WL-40	WL-41	WL-42	WL-43	WL-44	WL-45	WL-46	WL-47
DESCR CODE								
DESCRIPTION	CONNECT TO EXIST 8"	CONNECT TO EXIST 12"	CONNECT TO EXIST 16"	CONNECT TO EXIST 24"	CONNECT TO EXIST 30"	CONNECT TO EXIST 48"	TRENCH PROTEC-TION	REMOVE EXISTING CASING 30"
UNIT	EA	EA	EA	EA	EA	EA	LF	LF
SHEET # A-42			2				42	
SHEET # A-43				1	1	1	381	
SHEET # A-44		1					480	
SHEET # A-45		1	1				393	
SHEET # A-46		1		1			465	120
SHEET # A-47							444	
SHEET # A-48							127	
SHEET # A-49	1						438	
SHEET # A-50							480	
SHEET # A-51							355	
SHEET # A-52							480	
SHEET # A-53							480	
SHEET # A-54			1				372	
SHEET # A-55			1				95	
SHEET # A-56							480	
SHEET # A-57				1			130	
TOTALS	1	3	5	3	1	1	5642	120

NO.	DATE	BY	REVSION

SUMMARY OF WATER/WASTEWATER QUANTITIES

SH 45 / US 183 INTERCHANGE

HNTB ARCHITECTS ENGINEERS PLANNERS
The HNTB Companies

Texas Department of Transportation

© 2003 TEXAS TURNPIKE AUTHORITY DIVISION

DRAWING PREPARED BY: HNTB CORPORATION		CITY OF AUSTIN SHEET NO.
SHEET 3 OF 4		A4
FED. RD. DIV. NO.	FEDERAL AID PROJECT NO.	SHEET NO.
6	WG 2002 (243)	51

DGN:	STATE	DIST.	COUNTY	
CHK DGN:	TEXAS	14	WILLIAMSON	
DWG:	CONT.	SECT.	JOB	HIGHWAY NO.
CHK DWG:	0683	01	069	SH 45

Scale: 50.000000r1.000000
Plotted on: 14-MAR-2003 11:43

SUMMARY OF WASTEWATER LINES

ITEM	WW-1	WW-2	WW-3	WW-4	WW-5	WW-6	WW-7	WW-8
DESCR CODE								
DESCRIPTION	BORE ENCASEMENT (STL PIPE) (32 ") (WW)	PIPE 32" ENCASEMENT STEEL (WW)	SAN SEWER PIPE (21") (ASTM F679) (WW)	NEW MANHOLE CONSTRUCTION 4' DIA (WW)	MANHOLE ADJUSTMENT 4' DIA (WW)	REMOVE EXISTING MANHOLES (WW)	APPLY INTERIOR SURFACE COATING TO EXIST. MH (WW)	REMOVE DISPOSE EXIST 21" PVC (WW)
UNIT	LF	LF	LF	EA	EA	EA	EA	LF
SHEET # A58			320		1	2		618
SHEET # A59			480	2				
SHEET # A60	107	294	480	2	1		1	
SHEET # A61			426.5	2		1		133
TOTALS	107	294	1707	6	2	3	1	751

SUMMARY OF MISCELLANEOUS UTILITIES

ITEM	ITEM 5249	ITEM 5249	ITEM 5249	ITEM 5005				
DESCR CODE								
DESCRIPTION	TEMPORARY SEDIMENT CONTROL FENCE (MISC)	TEMPORARY SEDIMENT CONTROL FENCE (MISC)	TEMPORARY SEDIMENT CONTROL FENCE (MISC)	ROCK FILTER DAM (MISC)				
UNIT	LF	LF	LF	LF				
SHEET #	1218	1218	1218	150				
SHEET #	3625	3625	3625	297				
SHEET #	5885	5885	5885	38				
SHEET #	6192	6192	6192					
TOTALS	16920	16920	16920	485				

NO.	DATE	BY	REVSION

SUMMARY OF WATER/WASTEWATER QUANTITIES

SH 45 / US 183 INTERCHANGE

HNTB ARCHITECTS ENGINEERS PLANNERS
The HNTB Companies

Texas Department of Transportation

© 2003 TEXAS TURNPIKE AUTHORITY DIVISION

DRAWING PREPARED BY: HNTB CORPORATION		CITY OF AUSTIN SHEET NO.
SHEET 4 OF 4		A5
FED. RD. DIV. NO.	FEDERAL AID PROJECT NO.	SHEET NO.
6	MG 2002 (243)	52

DGN:	STATE	DIST.	COUNTY
CHK DGN:	TEXAS	14	WILLIAMSON
DWG:	CONT.	SECT.	JOB / HIGHWAY NO.
CHK DWG:	0683	01	069 / SH 45

Pen Table: I:\Jobs\32058\techprod\UTIL\plots\32058Uh.pen
Design Filename: \\sanw00\pmwork\Jobs\32058\TECHPROD\Util\Dwg\phs1\45wuq0804.dgn

Scale: 1000.000000:1.000000
Plotted on: 14-MAR-2003 11:43

NOTES:

1. CONTRACTOR SHALL NOTIFY THE PUBLIC WORKS DEPARTMENT 24 HOURS PRIOR TO STARTING CONSTRUCTION OR CLEARING OPERATIONS.

2. CONTRACTOR SHALL CALL "ONE CALL" AT 1-800-344-8377 FOR UTILITY LOCATIONS AT LEAST 48 HOURS PRIOR TO ANY WORK IN CITY EASEMENTS OR STREET RIGHT-OF-WAY.

3. THIS PROJECT IS LOCATED WITHIN THE _____ WATERSHED (CLASSIFIED AS _____) AND SHALL BE DEVELOPED, CONSTRUCTED AND MAINTAINED IN ACCORDANCE WITH CHAPTER 25 OF THE CODE OF THE CITY OF AUSTIN.

4. A/NO PORTION OF THIS SITE IS LOCATED WITHIN PARKLAND OR LAND USED FOR PARK PURPOSES. (IF SUCH LAND IS INCLUDED, DOCUMENTATION OF PARKS AND RECREATION DEPARTMENT APPROVAL IS REQUIRED AT THE TIME OF SUBMITTAL FOR GENERAL PERMIT PROGRAM APPROVAL.)

5. A/NO PORTION OF THIS SITE IS LOCATED WITHIN THE 100-YEAR FLOODPLAIN PER CITY OF AUSTIN AND FEDERAL EMERGENCY MANAGEMENT AGENCY FLOOD INSURANCE RATE MAPS.

6. THIS PROJECT IS/IS NOT X WITHIN THE EDWARDS AQUIFER RECHARGE ZONE AS DEFINED BY THE CITY OF AUSTIN. THIS PROJECT IS/IS NOT WITHIN THE EDWARDS AQUIFER RECHARGE ZONE AS REGULATED BY THE TEXAS NATURAL RESOURCES CONSERVATION COMMISSION (TNRCC).

7. THERE ARE/ARE NO CRITICAL ENVIRONMENTAL FEATURES WITHIN 150' OF ANY PORTION OF THIS PROJECT. A FIELD INVESTIGATION HAS BEEN PERFORMED AS A PART OF THIS PROJECT. A FIELD INVESTIGATION HAS NOT BEEN PERFORMED AS A PART OF THIS PROJECT AND IS NOT REQUIRED.

8. PARTY RESPONSIBLE FOR EROSION/SEDIMENTATION CONTROL MAINTENANCE:

   COMPANY: _____ PHONE: _____

   PARTY RESPONSIBLE FOR TREE/NATURAL AREA PROTECTION MAINTENANCE:

   COMPANY: _____ PHONE: _____

9. THE STANDARD SHEETS INCLUDED IN THIS PLAN SET WERE PROVIDED BY THE GENERAL PERMIT PROGRAM OFFICE FOR USE ON GENERAL PERMIT PROJECTS ONLY. IF ANY MODIFICATIONS TO THE SHEETS WERE MADE, THEY ARE CLEARLY INDICATED ON THE SHEET ITSELF AND IN THE COVER SHEET INDEX.

10. ADDITIONAL TRENCH E/S CONTROL: TRIANGULAR SEDIMENT FILTER DIKE (TYPE I) WILL BE INSTALLED ACROSS FULL WIDTH OF TRAFFIC CLOSURE AND DOWNSTREAM OF CONSTRUCTION AREA, PERPENDICULAR TO CURB. FILTER DIKE TO FOLLOW ACTIVE CONSTRUCTION. REMOVING AND RE-SETTING TYPE I DIKE IS CONSIDERED SUBSIDIARY TO BARRICADES AND TRAFFIC HANDLING.

11. PHASING, IF PROPOSED BY THE CONTRACTOR, WILL BE DELINEATED AND THE INFORMATION PROVIDED TO THE GENERAL PERMIT OFFICE PRIOR TO THE FIELD PRE-CONSTRUCTION MEETING. ADDITIONALLY, THE GENERAL PERMIT OFFICE WILL BE NOTIFIED VIA E-MAIL A MINIMUM OF 24 HOURS IN ADVANCE OF TRANSITION BETWEEN PHASES.

Pen Table: I:\Jobs\32058\TECHPROD\Util\Plots\32058Uh.pen
Design Filename: I:\Jobs\32058\TECHPROD\UTIL\Dwg\PHS1\45wgn01.dgn

John W. Strybos
STATE OF TEXAS
JOHN W. STRYBOS
64259
LICENSED
PROFESSIONAL ENGINEER
3/19/2003

GENERAL NOTES

SH 45 / US 183 INTERCHANGE

HNTB ARCHITECTS ENGINEERS PLANNERS
The HNTB Companies

Texas Department of Transportation
© 2003 TEXAS TURNPIKE AUTHORITY DIVISION

DRAWING PREPARED BY: HNTB CORPORATION			CITY OF AUSTIN SHEET NO.
SHEET 1 OF 1			A6
FED. RD. DIV. NO.	FEDERAL AID PROJECT NO.		SHEET NO.
6	MG 2002 (243)		732
DGN:	STATE	DIST.	COUNTY
CHK. DGN:	TEXAS	14	WILLIAMSON
DWG:	CONT.	SECT.	JOB / HIGHWAY NO.
CHK. DWG:	0683	01	069 / SH 45

Scale: 1000.000000:1.000000
Plotted on: 14-MAR-2003 11:43
Pen Table: I:\Jobs\32058\TECHPROD\UTIL\Plots\32058Uh.pen
Design Filename: I:\Jobs\32058\TECHPROD\UTIL\Dwg\PHS1\45wgn02.dgn

GENERAL PERMIT PROGRAM
STANDARD ENVIRONMENTAL NOTES

ADDITIONAL AREAS NOTES:

1. ANY ADDITIONAL AREAS REQUIRED FOR CONSTRUCTION OF THIS PROJECT SHALL BE THE SOLE RESPONSIBILITY OF THE CONTRACTOR. CONTRACTOR MUST SECURE CITY OF AUSTIN APPROVAL OF PROPOSED ADDITIONAL AREAS PRIOR TO USE. APPROVAL MUST BE SECURED FROM THE GENERAL PERMIT OFFICE OF THE WATERSHED PROTECTION AND DEVELOPMENT REVIEW DEPARTMENT.
2. ALL ASSOCIATED PERMITS AND FEES SHALL BE THE SOLE RESPONSIBILITY OF THE CONTRACTOR.
3. IN ORDER TO SECURE APPROVAL FOR USE OF ADDITIONAL AREAS, CONTRACTOR MUST PROVIDE COMPLETE SUBMITTAL TO GENERAL PERMIT OFFICE AND ALLOW A ONE WEEK COMMENT PERIOD FOR EACH REVIEW. CONTRACTOR SHOULD REQUEST MORE INFORMATION ON THE ELEMENTS REQUIRED TO BE INCLUDED IN THE SUBMITTAL FROM THE OWNER'S CONTACT PERSON FOR THIS PROJECT (LISTED ON THE COVER OF THIS PLAN SET).
4. CONTRACTOR MUST INSTALL AND MAINTAIN EROSION/SEDIMENTATION CONTROLS AND TREE PROTECTION FOR ALL SUCH AREAS IN ACCORDANCE WITH THE CITY OF AUSTIN ENVIRONMENTAL CRITERIA MANUAL AND AS INCLUDED IN THE APPROVED SUBMITTAL OR DIRECTED IN THE FIELD BY THE GENERAL PERMIT OFFICE INSPECTOR.
5. A SIGNED COPY OF THE GENERAL PERMIT OFFICE APPROVAL MUST BE KEPT ON SITE AND ACCESSIBLE AT ALL TIMES DURING PROJECT CONSTRUCTION.

DEWATERING NOTE:

CONTRACTOR IS RESPONSIBLE FOR DEWATERING OF WORK AREA. CONTRACTOR MUST SECURE CITY OF AUSTIN APPROVAL OF PROPOSED DEWATERING PROCEDURES PRIOR TO INSTALLATION OR USE. APPROVAL MUST BE SECURED FROM THE GENERAL PERMIT OFFICE OF THE WATERSHED PROTECTION AND DEVELOPMENT REVIEW DEPARTMENT. CONTRACTOR MUST PROVIDE COMPLETE SUBMITTAL TO GENERAL PERMIT OFFICE AND ALLOW A ONE WEEK (MIN.) COMMENT PERIOD FOR EACH REVIEW. CONTACT THE GENERAL PERMIT OFFICE FOR SUBMITTAL REQUIREMENTS.

FUEL STORAGE NOTE:

FUEL STORAGE IS PROHIBITED ON THIS PROJECT. ADDITIONALLY, THE CONTRACTOR IS REQUIRED TO NOTIFY THE GENERAL PERMIT OFFICE IMMEDIATELY FOLLOWING ANY SPILL OF FUEL OR OTHER TOXIC MATERIAL. CONTRACTOR IS REQUIRED TO FOLLOW-UP WITH WRITTEN DOCUMENTATION, INCLUDING A COMPLETE DESCRIPTION OF THE INCIDENT, MATERIAL SPILLED, AND ACTIONS TAKEN TO CONTAIN AND CLEAN-UP MATERIAL.

FUGITIVE DUST CONTROL NOTE:

ALL PROJECTS APPROVED BY THE GENERAL PERMIT OFFICE MUST COMPLY WITH THE CODE OF THE CITY OF AUSTIN AND THE ENVIRONMENTAL CRITERIA MANUAL REQUIREMENTS TO CONTROL AIRBORNE DUST. COMPLIANCE IS REQUIRED FOR ENTIRE PROJECT SITE AS WELL AS ASSOCIATED OPERATIONS. CONTACT THE GENERAL PERMIT OFFICE FOR RECOMMENDED CONTROL METHODS.

PROJECT SEQUENCE:
(REFER TO COVER FOR PROJECT-SPECIFIC ADDITIONS, IF APPLICABLE.)

PRIOR TO CONSTRUCTION:

1. SECURE APPLICABLE COA PERMITS, INCLUDING APPROVAL UNDER GENERAL PERMIT AND UTILITY STREET CUT PERMIT.
2. NOTIFY GENERAL PERMIT OFFICE INSPECTOR PRIOR TO PLACEMENT OF E/S CONTROLS AND TREE PROTECTION FENCING. ALL PROPOSED PHASING OF CONTROLS MUST BE SUBMITTED TO AND APPROVED BY THE INSPECTOR PRIOR TO THE FIELD PRE-CONSTRUCTION CONFERENCE.
3. NOTIFY COA TEMPORARY TRAFFIC CONTROL INSPECTOR PRIOR TO PLACEMENT OF TRAFFIC CONTROLS. ALL PROPOSED PHASING OF CONTROLS MUST BE INDICATED ON APPROVED TRAFFIC CONTROL PLAN AND SEALED BY PROFESSIONAL ENGINEER.
4. PLACE TEMPORARY E/S CONTROLS AND TREE PROTECTION FENCING PRIOR TO BEGINNING ANY EXCAVATION. INSTALL C.I.P. SIGN, IF APPLICABLE.
5. HOLD ENVIRONMENTAL PRE-CONSTRUCTION CONFERENCE ON SITE WITH THE CONTRACTOR, OWNER'S REPRESENTATIVE, AND GENERAL PERMIT OFFICE INSPECTOR AFTER INSTALLATION OF E/S CONTROLS AND TREE PROTECTION FENCING AND PRIOR TO ANY TRENCHING OPERATIONS.
6. PLACE TEMPORARY TRAFFIC CONTROL DEVICES.

PROJECT CONSTRUCTION:

1. BEGIN CONSTRUCTION. CONTACT GENERAL PERMIT OFFICE INSPECTOR FOR ADDITIONAL PRE-CONSTRUCTION CONFERENCES FOR EACH PHASE, IF REQUIRED.
2. CONTACT GENERAL PERMIT OFFICE TO SCHEDULE FIELD INSPECTION PRIOR TO BEGINNING INSTALLATION OF PERMANENT E/S CONTROLS.
3. COMPLETE RESTORATION OF ALL AREAS DISTURBED BY CONSTRUCTION ACTIVITIES FOR THIS PROJECT. (PERMANENT E/S CONTROLS)
4. HOLD ENVIRONMENTAL POST-CONSTRUCTION CONFERENCE ON SITE WITH THE CONTRACTOR, OWNER'S REPRESENTATIVE, AND GENERAL PERMIT OFFICE INSPECTOR. ALL PERMANENT E/S CONTROLS MUST BE ACCEPTED BY THE GENERAL PERMIT OFFICE INSPECTOR.
5. FOLLOWING FINAL ACCEPTANCE OF PERMANENT E/S CONTROLS BY THE GENERAL PERMIT OFFICE INSPECTOR, REMOVE TEMPORARY E/S CONTROLS. CLEAN EXISTING STORM DRAINAGE SYSTEMS AS NECESSARY DUE TO CONSTRUCTION OPERATIONS.
6. DRESS-UP AND RESTORE ANY AREAS DISTURBED BY REMOVAL OF TEMPORARY E/S CONTROLS DESCRIBED ABOVE.
7. REMOVE TEMPORARY TRAFFIC CONTROL DEVICES.

CITY OF AUSTIN - STANDARD NOTES
TREE AND NATURAL AREA PROTECTION
(MODIFIED FOR USE ON GENERAL PERMIT PROJECTS)

1. ALL TREES AND NATURAL AREAS SHOWN ON PLAN TO BE PRESERVED SHALL BE PROTECTED DURING CONSTRUCTION WITH TEMPORARY FENCING.
2. PROTECTIVE FENCES SHALL BE ERECTED ACCORDING TO CITY OF AUSTIN STANDARDS FOR TREE PROTECTION.
3. PROTECTIVE FENCES SHALL BE INSTALLED PRIOR TO THE START OF ANY SITE PREPARATION WORK (CLEARING, GRUBBING OR GRADING), AND SHALL BE MAINTAINED THROUGHOUT ALL PHASES OF THE PROJECT.
4. EROSION AND SEDIMENTATION CONTROL BARRIERS SHALL BE INSTALLED OR MAINTAINED IN A MANNER WHICH DOES NOT RESULT IN SOIL BUILD-UP WITHIN TREE DRIP LINES.
5. PROTECTIVE FENCES SHALL COMPLETELY SURROUND THE TREES OR GROUP OF TREES AND WILL BE LOCATED AT THE OUTERMOST LIMIT OF BRANCHES (DRIP LINE). FOR NATURAL AREAS, PROTECTIVE FENCES SHALL FOLLOW THE LIMIT OF CONSTRUCTION LINE, IN ORDER TO PREVENT THE FOLLOWING:
   A. SOIL COMPACTION IN THE ROOT ZONE AREA RESULTING FROM VEHICULAR TRAFFIC OR STORAGE OF EQUIPMENT OR MATERIALS;
   B. ROOT ZONE DISTURBANCES DUE TO GRADE CHANGES (GREATER THAN 6 INCHES CUT OR FILL) OR TRENCHING NOT REVIEWED AND AUTHORIZED BY THE GENERAL PERMIT OFFICE OF THE WATERSHED PROTECTION DEPARTMENT;
   C. WOUNDS TO EXPOSED ROOTS, TRUNK OR LIMBS BY MECHANICAL EQUIPMENT;
   D. OTHER ACTIVITIES DETRIMENTAL TO TREES SUCH AS CHEMICAL STORAGE, CEMENT TRUCK CLEANING, AND FIRES.
6. EXCEPTIONS TO INSTALLING PROTECTIVE FENCES AT CRITICAL ROOT ZONES MAY BE PERMITTED IN THE FOLLOWING CASES:
   A. WHERE THERE IS TO BE AN APPROVED GRADE CHANGE, IMPERMEABLE PAVING SURFACE, TREE WELL, OR OTHER SUCH SITE DEVELOPMENT, ERECT THE FENCE APPROXIMATELY 2 TO 4 FEET BEYOND THE AREA DISTURBED;
   B. WHERE PERMEABLE PAVING IS TO BE INSTALLED, ERECT THE FENCE AT THE OUTER LIMITS OF THE PERMEABLE PAVING AREA
   C. WHERE TREES ARE CLOSE TO PROPOSED BUILDINGS, ERECT THE FENCE NO CLOSER THAN 6 FEET TO THE BUILDING
   D. WHERE THERE ARE SEVERE SPACE CONSTRAINTS DUE TO TRACT SIZE, OR OTHER SPECIAL REQUIREMENTS, CONTACT THE GENERAL PERMIT OFFICE AT 974-6330 TO DISCUSS ALTERNATIVES.

   SPECIAL NOTE: FOR THE PROTECTION OF NATURAL AREAS, NO EXCEPTIONS TO INSTALLING FENCES AT THE LIMIT OF CONSTRUCTION LINE WILL BE PERMITTED.

   WHERE ANY OF THE ABOVE EXCEPTIONS RESULT IN A FENCE BEING CLOSER THAN 4 FEET TO A TREE TRUNK, PROTECT THE TRUNK WITH STRAPPED-ON PLANKING TO A HEIGHT OF 8 FEET (OR TO THE LIMITS OF LOWER BRANCHING) IN ADDITION TO THE REDUCED FENCING.
7. WHERE ANY OF THE ABOVE EXCEPTIONS RESULT IN AREAS OF UNPROTECTED ROOT ZONES, THOSE AREAS SHOULD BE COVERED WITH 4 INCHES OF ORGANIC MULCH TO MINIMIZE SOIL COMPACTION.
8. ALL GRADING WITHIN PROTECTED ROOT ZONE AREAS SHALL BE DONE BY HAND OR WITH SMALL EQUIPMENT TO MINIMIZE ROOT DAMAGE. PRIOR TO GRADING, RELOCATE PROTECTIVE FENCES TO 2 FEET BEHIND THE GRADE CHANGE AREA.
9. ANY ROOTS EXPOSED BY CONSTRUCTION ACTIVITY SHALL BE PRUNED FLUSH WITH THE SOIL. BACKFILL ROOT AREAS WITH GOOD QUALITY TOP SOIL AS SOON AS POSSIBLE. IF EXPOSED ROOT AREAS ARE NOT BACKFILLED WITHIN 2 DAYS, COVER THEM WITH ORGANIC MATERIAL IN A MANNER WHICH REDUCES SOIL TEMPERATURE AND MINIMIZES WATER LOSS DUE TO EVAPORATION.
10. PRIOR TO EXCAVATION OR GRADE CUTTING WITHIN TREE DRIPLINES, MAKE A CLEAN CUT BETWEEN THE DISTURBED AND UNDISTURBED ROOT ZONES WITH A ROCK SAW OR SIMILAR EQUIPMENT TO MINIMIZE DAMAGE TO REMAINING ROOTS.
11. TREES MOST HEAVILY IMPACTED BY CONSTRUCTION ACTIVITIES SHOULD BE WATERED DEEPLY ONCE A WEEK DURING PERIODS OF HOT, DRY WEATHER. TREE CROWNS SHOULD BE SPRAYED WITH WATER PERIODICALLY TO REDUCE DUST ACCUMULATION ON THE LEAVES.
12. ANY TRENCHING REQUIRED FOR THE INSTALLATION OF LANDSCAPE IRRIGATION SHALL BE PLACED AS FAR FROM EXISTING TREE TRUNKS AS POSSIBLE.
13. NO LANDSCAPE TOPSOIL DRESSING GREATER THAN 4 INCHES SHALL BE PERMITTED WITHIN THE DRIPLINE OF TREES. NO SOIL IS PERMITTED ON THE ROOT FLARE OF ANY TREE.
14. PRUNING TO PROVIDE CLEARANCE FOR STRUCTURES, VEHICULAR TRAFFIC AND EQUIPMENT SHALL TAKE PLACE BEFORE CONSTRUCTION BEGINS.
15. ALL FINISHED PRUNING MUST BE DONE ACCORDING TO RECOGNIZED, APPROVED STANDARDS OF THE INDUSTRY (REFERENCE THE NATIONAL ARBORIST ASSOCIATION PRUNING STANDARDS FOR SHADE TREES AVAILABLE ON REQUEST FROM THE GENERAL PERMIT OFFICE).
16. DEVIATIONS FROM THE ABOVE NOTES MAY BE CONSIDERED ORDINANCE VIOLATIONS IF THERE IS SUBSTANTIAL NONCOMPLIANCE OR IF A TREE SUSTAINS DAMAGE AS A RESULT.
17. TREES APPROVED FOR REMOVAL SHALL BE REMOVED IN A MANNER WHICH DOES NOT IMPACT TREES TO BE PRESERVED.

John W. Strybos
STATE OF TEXAS
JOHN W. STRYBOS
64259
LICENSED
PROFESSIONAL ENGINEER
3/19/2003

ENVIRONMENTAL NOTES

SH 45 / US 183 INTERCHANGE

HNTB ARCHITECTS ENGINEERS PLANNERS
The HNTB Companies

Texas Department of Transportation
© 2003 TEXAS TURNPIKE AUTHORITY DIVISION

DRAWING PREPARED BY: HNTB CORPORATION			CITY OF AUSTIN SHEET NO.
SHEET 1 OF 2			A7
FED. RD. DIV. NO.	FEDERAL AID PROJECT NO.		SHEET NO.
6	MG 2002 (243)		733
DGN:	STATE	DIST.	COUNTY
CHK DGN:	TEXAS	14	WILLIAMSON
DWG:	CONT.	SECT.	JOB / HIGHWAY NO.
CHK DWG:	0683	01	069 / SH 45

Scale: 1000.000000:1.000000
Plotted on: 14-MAR-2003 11:44

SUPPLEMENTAL TREE PROTECTION NOTES

1. ALL TREES 8"* AND LARGER LOCATED WITHIN THE LIMITS OF CONSTRUCTION OR WITH CANOPIES/CRITICAL ROOT ZONES EXTENDING INTO THE LIMITS OF CONSTRUCTION HAVE BEEN SURVEYED AND ARE SHOWN IN THIS PLAN SET. DAMAGE TO, OR REMOVAL OF, TREES SHOWN IN DOCUMENT SET TO BE PRESERVED SHALL CONSTITUTE A VIOLATION OF THE CITY OF AUSTIN (COA) PERMIT.
2. ALL TREE PROTECTION FENCING MUST COMPLY WITH CITY OF AUSTIN REQUIREMENTS AS OUTLINED IN THE ENVIRONMENTAL CRITERIA MANUAL AND AS INDICATED BY STANDARD COA NOTES AND DETAILS INCLUDED WITHIN THIS DOCUMENT SET. CONTRACTOR SHALL INSTALL FENCING PRIOR TO PRE-CONSTRUCTION CONFERENCE, MAKE ADJUSTMENTS TO FENCING AS DIRECTED BY THE COA ENVIRONMENTAL INSPECTOR, AND MAINTAIN FENCING UNTIL PROJECT IS COMPLETE.
3. TYPE AND LOCATION OF ALL TREE PROTECTION FENCING MUST BE APPROVED IN THE FIELD BY THE GENERAL PERMIT OFFICE INSPECTOR PRIOR TO CONSTRUCTION.
4. ALL TRENCHING WITHIN THE CRITICAL ROOT ZONE OF A TREE TO BE PRESERVED WILL BE SAW CUT.
5. CONTACT GENERAL PERMIT OFFICE FOR INSPECTION PRIOR TO ANY PRUNING ACTIVITIES ON TREES IN PROJECT AREA.

* TREE SURVEY SIZE REQUIREMENTS VARY BY PROJECT AREA AND/OR PROPERTY OWNERSHIP.

OAK WILT PREVENTION NOTES

1. PRUNING OF AN EXISTING TREE THAT IS NECESSARY AS PART OF THIS PROJECT SHALL BE CONDUCTED IN ACCORDANCE WITH ANSI A300-1995 STANDARDS, OR LATEST APPROVED EDITION.
2. PRUNING SHALL BE DONE WITH CLEAN, SHARP TOOLS. TO PREVENT BARK TEARS, THE WEIGHT OF THE BRANCH SHALL BE REMOVED BEFORE MAKING FINAL PRUNING CUT.
3. ALL PRUNING SHALL PRESERVE THE NATURAL CHARACTER OF THE TREE.
4. ONLY COLLAR CUTS ARE ACCEPTABLE. NO FLUSH CUTS OR STUB CUTS WILL BE ALLOWED.
5. ALL TREE BRANCHES NECESSARY TO BE REMOVED FOR THE SAFE CONSTRUCTION OF THIS PROJECT SHALL BE IDENTIFIED BY THE CONTRACTOR AND APPROVED BY THE GENERAL PERMIT OFFICE INSPECTOR PRIOR TO REMOVAL.
6. ALL BRANCHES THAT ARE BROKEN OR DAMAGED DURING CONSTRUCTION SHALL BE REMOVED.
7. PRUNING CUTS OR DAMAGED AREAS ON AN OAK TREE SHALL BE PAINTED WITHIN FIVE MINUTES WITH A STANDARD TREE WOUND DRESSING. TREE WOUND DRESSING SHALL BE EITHER TREEKOTE AEROSOL OR TANGLEFOOT PRUNING SEALER (OR APPROVED EQUAL).
8. ANY TREE ROOTS THAT ARE EXPOSED, CUT, OR TORN DURING CONSTRUCTION ACTIVITY SHALL BE PRUNED FLUSH WITH THE SURROUNDING SOIL. (REFER ALSO TO NUMBER 9 OF THE TREE AND NATURAL AREA PROTECTION NOTES INCLUDED IN THIS PLAN SET.)

CITY OF AUSTIN - STANDARD NOTES
EROSION AND SEDIMENTATION CONTROL
(MODIFIED FOR USE ON GENERAL PERMIT PROJECTS)

1. THE CONTRACTOR SHALL INSTALL EROSION/SEDIMENTATION CONTROLS AND TREE/NATURAL AREA PROTECTIVE FENCING PRIOR TO ANY SITE PREPARATION WORK (CLEARING, GRUBBING, OR EXCAVATION).
2. THE PLACEMENT OF EROSION/SEDIMENTATION CONTROLS SHALL BE IN ACCORDANCE WITH THE ENVIRONMENTAL CRITERIA MANUAL AND THE APPROVED EROSION AND SEDIMENTATION CONTROL PLAN.
3. THE PLACEMENT OF TREE/NATURAL AREA PROTECTIVE FENCING SHALL BE IN ACCORDANCE WITH THE CITY OF AUSTIN STANDARD NOTES FOR TREE AND NATURAL AREA PROTECTION AND THE APPROVED GRADING/TREE AND NATURAL AREA PLAN.
4. A PRE-CONSTRUCTION CONFERENCE SHALL BE HELD ON-SITE WITH THE CONTRACTOR, DESIGN ENGINEER, PERMIT APPLICANT, AND GENERAL PERMIT OFFICE INSPECTOR AFTER INSTALLATION OF THE EROSION/SEDIMENTATION CONTROLS AND THE TREE/NATURAL AREA PROTECTION MEASURES AND PRIOR TO BEGINNING ANY SITE PREPARATION WORK. THE CONTRACTOR SHALL NOTIFY THE GENERAL PERMIT OFFICE AT 512/974-6330, AT LEAST 3 DAYS PRIOR TO THE MEETING DATE.
5. ANY SIGNIFICANT VARIATION IN MATERIALS OR LOCATIONS OF CONTROLS OR FENCES FROM THOSE SHOWN ON THE APPROVED PLANS MUST BE APPROVED BY THE REVIEWING ENGINEER AND THE GENERAL PERMIT OFFICE INSPECTOR.
6. THE CONTRACTOR IS REQUIRED TO INSPECT THE CONTROLS AND FENCES AT WEEKLY INTERVALS AND AFTER SIGNIFICANT RAINFALL EVENTS TO INSURE THAT THEY ARE FUNCTIONING PROPERLY. THE PERSON(S) RESPONSIBLE FOR MAINTENANCE OF CONTROLS AND FENCES SHALL IMMEDIATELY MAKE ANY NECESSARY REPAIRS TO DAMAGED AREAS. SILT ACCUMULATION AT CONTROLS MUST BE REMOVED WHEN THE DEPTH REACHES SIX (6) INCHES. SILT ACCUMULATION AT TYPE II INLET DEVICES SHOULD BE REMOVED WHEN THE DEPTH REACHES TWO (2) INCHES.
7. PRIOR TO FINAL ACCEPTANCE BY THE CITY, HAUL ROADS AND WATERWAY CROSSINGS CONSTRUCTED FOR TEMPORARY CONTRACTOR ACCESS MUST BE REMOVED, ACCUMULATED SEDIMENT REMOVED FROM THE WATERWAY AND THE AREA RESTORED TO THE ORIGINAL GRADE AND REVEGETATED. ALL LAND CLEARING DEBRIS SHALL BE DISPOSED OF IN APPROVED SPOIL DISPOSAL SITES.
8. ALL WORK MUST STOP IF A VOID IN THE ROCK SUBSTRATE IS DISCOVERED WHICH IS ONE SQUARE FOOT OR LARGER IN TOTAL AREA, BLOWS AIR FROM WITHIN THE SUBSTRATE, AND/OR CONSISTENTLY RECEIVES WATER DURING ANY RAIN EVENT. AT THIS TIME, IT IS THE RESPONSIBILITY OF THE PROJECT MANAGER TO IMMEDIATELY CONTACT THE GENERAL PERMIT OFFICE INSPECTOR FOR FURTHER INVESTIGATION.
9. FIELD REVISIONS TO THE EROSION AND SEDIMENTATION CONTROL PLAN MAY BE REQUIRED BY THE GENERAL PERMIT OFFICE INSPECTOR DURING THE COURSE OF CONSTRUCTION TO CORRECT CONTROL INADEQUACIES. MAJOR REVISIONS MUST BE APPROVED BY THE GENERAL PERMIT OFFICE OF THE WATERSHED PROTECTION AND DEVELOPMENT REVIEW DEPARTMENT.

10. PERMANENT EROSION CONTROL: ALL DISTURBED AREAS SHALL BE RESTORED AS NOTED BELOW.
    a. A MINIMUM OF FOUR INCHES OF TOPSOIL SHALL BE PLACED IN ALL DRAINAGE CHANNELS (EXCEPT ROCK) AND BETWEEN THE CURB AND RIGHT-OF-WAY LINE.
    b. THE SEEDING FOR PERMANENT EROSION CONTROL SHALL BE APPLIED OVER AREAS DISTURBED BY CONSTRUCTION AS FOLLOWS (OR AS INDICATED IN NOTE g. BELOW):
        i. FROM SEPTEMBER 15 TO MARCH 1, SEEDING SHALL BE WITH A COMBINATION OF 1 POUND PER 1,000 SQUARE FEET OF UNHULLED BERMUDA AND 1 POUND PER 1,000 SQUARE FEET OF WINTER RYE WITH A PURITY OF 95% WITH 90% GERMINATION.
        ii. FROM MARCH 2 TO SEPTEMBER 14, SEEDING SHALL BE WITH HULLED BERMUDA AT A RATE OF 1 POUND PER 1,000 SQUARE FEET WITH A PURITY OF 95% WITH 85% GERMINATION.
    c. FERTILIZER SHALL HAVE AN ANALYSIS OF 15-15-15 AND SHALL BE APPLIED AT THE RATE OF 65 POUNDS PER ACRE.
    d. THE PLANTED AREA SHALL BE IRRIGATED OR SPRINKLED IN A MANNER THAT WILL NOT ERODE THE TOPSOIL BUT WILL SUFFICIENTLY SOAK THE SOIL TO A DEPTH OF SIX INCHES. THE IRRIGATION SHALL OCCUR AT TEN-DAY INTERVALS DURING THE FIRST TWO MONTHS. RAINFALL OCCURRENCES OF 1/2 INCH OR MORE SHALL POSTPONE THE WATERING SCHEDULE FOR ONE WEEK.
    e. MULCH TYPE USED SHALL BE HAY, STRAW OR MULCH APPLIED AT A RATE OF 45 POUNDS PER 1000 SQUARE FEET.
    f. RESTORATION SHALL BE ACCEPTABLE WHEN THE GRASS HAS GROWN AT LEAST 1-1/2 INCHES HIGH WITH 95% COVERAGE, PROVIDED NO BARE SPOTS LARGER THAN 16 SQUARE FEET EXIST.
    g. NATIVE GRASS IS ____ OR IS NOT ____ REQUIRED ON THIS PROJECT. NATIVE GRASS SEEDING SHALL COMPLY WITH REQUIREMENTS OF THE CITY OF AUSTIN ENVIRONMENTAL CRITERIA MANUAL.
11. DEVELOPER INFORMATION:

    OWNER: COMPANY: _____
    CONTACT: _____
    ADDRESS: _____
    _____
    PHONE: _____
    FAX: _____

    OWNER'S REPRESENTATIVE RESPONSIBLE FOR PLAN ALTERATIONS:
    COMPANY: _____
    ADDRESS: _____
    _____
    PHONE: _____
    FAX: _____

    PARTY RESPONSIBLE FOR EROSION/SEDIMENTATION CONTROL MAINTENANCE:
    COMPANY: CONTRACTOR

    PARTY RESPONSIBLE FOR TREE/NATURAL AREA PROTECTION MAINTENANCE:
    COMPANY: CONTRACTOR
12. THE CONTRACTOR SHALL NOT DISPOSE OF SURPLUS EXCAVATED MATERIAL FROM THE SITE WITHOUT NOTIFYING THE GENERAL PERMIT OFFICE, AT 499-6330, AT LEAST 48 HOURS PRIOR TO THE SPOILS REMOVAL. THIS NOTIFICATION SHALL INCLUDE THE DISPOSAL LOCATION AND A COPY OF THE PERMIT ISSUED TO RECEIVE THE MATERIAL.
13. INLET PROTECTION SHALL BE INSTALLED IMMEDIATELY PRIOR TO STREET WORK AND WILL BE REMOVED AS SOON AS THE GENERAL PERMIT OFFICE INSPECTOR AGREES THAT THERE IS NO POTENTIAL FOR SEDIMENTATION.

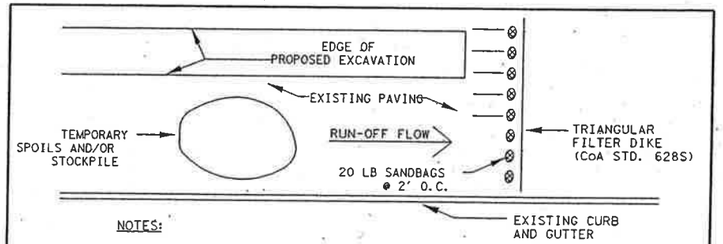

NOTES:
1. THE TEMPORARY SPOILS/STOCKPILE STORAGE AREA AND STAGING AREA WILL BE LOCATED DIRECTLY ADJACENT TO THE EXCAVATION AND ON THE PAVEMENT.
2. ANY SPOIL NOT INTENDED TO BE REUSED WILL BE HAULED TO AN APPROVED OR PERMITTED DISPOSAL SITE DAILY.
3. INSTALL TRIANGULAR SEDIMENT FILTER DIKE (TYPE I) ACROSS FULL WIDTH OF TRAFFIC CLOSURE AND DOWNSTREAM OF CONSTRUCTION AREA, PERPENDICULAR TO CURB. FILTER DIKE TO FOLLOW ACTIVE CONSTRUCTION. ACTIVE CONSTRUCTION. REMOVING AND RE-SETTING TYPE I DIKE IS CONSIDERED SUBSIDIARY TO BARRICADES AND TRAFFIC HANDLING.

ADDITIONAL EROSION/SEDIMENTATION CONTROL FOR WORK IN PAVED AREAS

John W. Strybos
STATE OF TEXAS
JOHN W. STRYBOS
64259
LICENSED
PROFESSIONAL ENGINEER
3/19/2003

ENVIRONMENTAL NOTES

SH 45 / US 183 INTERCHANGE

HNTB ARCHITECTS ENGINEERS PLANNERS
The HNTB Companies

Texas Department of Transportation
© 2003 TEXAS TURNPIKE AUTHORITY DIVISION

DRAWING PREPARED BY: HNTB CORPORATION			CITY OF AUSTIN SHEET NO.
SHEET 2 OF 2			A8
FED. RD. DIV. NO.	FEDERAL AID PROJECT NO.		SHEET NO.
6	MG 2002 (243)		734
DGN:	STATE	DIST.	COUNTY
CHK. DGN:	TEXAS	14	WILLIAMSON
DWG:	CONT.	SECT.	JOB / HIGHWAY NO.
CHK. DWG:	0683	01	069 / SH 45

Pen Table: I:\Jobs\32058\TECHPROD\UTIL\Plots\32058uh.pen
Design Filename: I:\Jobs\32058\TECHPROD\UTIL\Dwg\PHSI\45wgn03.dgn

Scale: 1000.000000:1.000000
Plotted on: 19-MAR-2003 09:32

Texas Natural Resource Conservation Commission
Organized Sewage Collection System
General Construction Notes (F-0596)

1. This Organized Sewage Collection System must be designed and constructed in accordance with the Texas Natural Resource Conservation Commission's (TNRCC) Edwards Aquifer Rules 30 Texas Administrative Code (TAC) §213.5(c), the Design Criteria for Sewerage Systems 30 TAC §317.1, 30 TAC §317.2, 30 TAC §317.3, and 30 TAC §317.13, and the City of Austin Standard Specifications.

2. All contractors conducting regulated activities associated with this proposed regulated project must be provided with copies of the Sewage Collection System plan and the TNRCC letter indicating the specific conditions of its approval. During the course of these regulated activities, the contractors must be required to keep on-site copies of the plan and the approval letter.

3. Prior to commencing any regulated activity, the applicant or his agent must notify the Austin Regional Office, in writing, of the date on which the regulated activity will begin.

4. Any modification to the activities described in the referenced SCS application following the date of approval may require the submittal of an SCS application to modify this approval, including the payment of appropriate fees and all information necessary for its review and approval.

5. The temporary erosion and sedimentation controls must be installed prior to initiating any other construction activity and maintained in accordance with the requirements of the construction plans. All temporary erosion and sedimentation controls must be removed when the construction area is stabilized.

6. The sewer line trench details showing the cross section with the dimensions, pipe placement, and backfill instructions are included on Plan Sheet 1 of 1 of these plans. All sewer pipes joints must meet the requirements in 30 TAC §317.2(a)(3).

   Gravity lines must be SDR 35 or less. Pressurized sewer systems must have pipe with a minimum working pressure rating of 150 psi.

   The ASTM, ANSI, or AWWA specification numbers for the pipe(s) and joints are ASTM F-769 T-1 Wall.

   The pipe material, the pressure classes, and the SDR and/or DR designations are PVC, SDR-26.

7. If any sensitive features are discovered during the wastewater line trenching activities, all regulated activities near the sensitive feature must be suspended immediately. The owner must notify the appropriate regional office of the Texas Natural Resource Conservation Commission in writing within two working days of the feature discovered. The applicant must submit a plan for ensuring the structural integrity of the sewer line or for modifying the proposed collection system alignment around the feature. The regulated activities near the sensitive feature may not proceed until the executive director has reviewed and approved the methods proposed to protect the sensitive feature and the Edwards Aquifer from any potentially adverse impacts to water quality while maintaining the structural integrity of the line.

8. Sewer lines located within or crossing the 5-year floodplain of a drainageway will be protected from inundation and stream velocities which could cause erosion and scouring of backfill. The trench must be capped with concrete to prevent scouring of backfill, or the sewer lines must be encased in concrete. All concrete shall have a minimum thickness of six (6) inches.

9. Blasting procedures for protection of existing sewer lines and other utilities will be in accordance with the National Fire Protection Association criteria. Sand is not allowed as bedding or backfill in trenches that have been blasted. If any existing sewer lines are damaged, the lines must be repaired and retested.

10. All manholes constructed or rehabilitated on this project must have watertight size on size resilient connectors allowing for differential settlement. If manholes are constructed within the 100-year floodplain, the cover must have a gasket and be bolted to the ring. Where gasketed manhole covers are required for more than three manholes in sequence or for more than 1500 feet, alternate means of venting will be provided. Bricks are not an acceptable construction material for any portion of the manhole.

    The diameter of the manholes must be a minimum of four feet and the manhole covers must have a minimum nominal diameter of two feet. These dimensions and other details showing compliance with the commission's rules concerning manholes and sewer line/manhole inverts described in 30 TAC 317.2(c)(5)(E) are included on Plan Sheet 1 of 1.

    It is suggested that entrance into manholes in excess of four feet deep be accomplished by means of a portable ladder. Where steps are used, they shall be made of a non-corrosive material and be in accordance with applicable OSHA specifications.

11. Where water lines and new sewer line are installed with a separation distance closer than nine feet (i.e., water lines crossing wastewater lines, water lines paralleling wastewater lines, or water lines next to manholes) the installation must meet the requirements of 30 TAC §317.13 (Design of Sewerage Systems) or 30 TAC §290.44(e) (Water Hygiene).

John W. Strybos
STATE OF TEXAS
JOHN W. STRYBOS
64259
LICENSED
PROFESSIONAL ENGINEER
3/19/2003

SCS
NOTES

SH 45 / US 183 INTERCHANGE

HNTB ARCHITECTS ENGINEERS PLANNERS
The HNTB Companies

Texas Department of Transportation
© 2003 TEXAS TURNPIKE AUTHORITY DIVISION

DRAWING PREPARED BY: HNTB CORPORATION			CITY OF AUSTIN SHEET NO.
SHEET 1 OF 3			A9
FED. RD. DIV. NO.	FEDERAL AID PROJECT NO.		SHEET NO.
6	MG 2002 (243)		734A

DGN:	STATE	DIST.	COUNTY
CHK DGN:	TEXAS	14	WILLIAMSON
DWG:	CONT.	SECT.	JOB	HIGHWAY NO.
CHK DWG:	0683	01	069	SH 45

Pen Table: I:\Jobs\32058\techprod\UTIL\plots\32058Uh.pen
Design Filename: \\eanw00\pmwork\Jobs\32058\TECHPROD\Util\Dwg\phal\45wgn04.dgn

Scale: 1000.000000:1.000000
Plotted on: 19-MAR-2003 09:32

12. Where sewers lines deviate from straight alignment and uniform grade all curvature of sewer pipe must be achieved by procedures that are recommended by the pipe manufacturer.

    If pipe flexure is proposed, the contractor shall use procedures that are recommended by the pipe manufacturer to prevent deflection of the joint.

    Specific care must be taken to ensure that the joint is placed in the center of the trench and properly bedded in accordance with 30 TAC §317.2(a)(5).

13. New sewage collection system lines must be constructed with "stub outs" for the connection of anticipated extensions. The location of such "stub outs" must be marked on the ground such that the location of such "stub outs" can be easily determined at the time of connection of the extensions. Such "stub outs" must be manufactured wyes or tees that are compatible in size and material with both the sewer line and the extension. At the time of original construction, new "stub-outs" must be constructed sufficiently to extend beyond the edge(s) of any street pavement under which they will pass to the property line. All "stub-outs" must be sealed with a manufactured cap to prevent leakage. Extensions that were not anticipated at the time of original construction or that are to be connected to an existing sewer line not furnished with "stub outs" must be connected using a manufactured saddle and in accordance with accepted plumbing techniques.

    If no stub-out is present an alternate method of joining laterals is shown in the detail on Plan Sheet 1 of 1. (For potential future laterals).

    The private service lateral stub-outs must be installed as shown on the plan and profile sheets on Plan Sheet 1 of 1 and marked after backfilling as shown in the detail on Plan Sheet 1 of 1.

14. Trenching, bedding and backfill must conform with 30 TAC §317.2(a)(5). The bedding and backfill for flexible pipe must comply with the standards of ASTM D-2321, Classes IA, IB, II or III. Rigid pipe bedding must comply with the requirements of ASTM C 12 (ANSI A 106.2) classes A, B or C.

15. Sewer lines must be tested from manhole to manhole. When a new sewer line is connected to an existing stub or clean-out, it must be tested from existing manhole to new manhole. If a stub or clean-out is used at the end of the proposed sewer line, no private service attachments may be connected between the last manhole and the cleanout unless it can be certified as conforming with the provisions of 30 TAC §213.5(c)(3)(E).

16. All sewer lines must be tested in accordance with 30 TAC §317.2(a)(4). The engineer must retain copies of all test results which must be made available to the executive director upon request. The engineer must certify in writing that all wastewater lines have passed all required testing to the appropriate regional office within 30 days of test completion and prior to use of the new collection system. Testing method will be:

(A) Infiltration or Exfiltration Tests. The total exfiltration as determined by a hydrostatic head test, must not exceed 50 gallons per inch diameter per mile of pipe per 24 hours at a minimum test head of two feet above the crown of the pipe at the upstream manhole. When pipes are installed below the groundwater level an infiltration test must be used in lieu of the exfiltration test. The total infiltration, as determined by a hydrostatic head test, must not exceed 50 gallons per inch diameter per mile of pipe per 24 hours at a minimum test head of two feet above the crown of the pipe at the upstream manhole, or at least two feet above existing groundwater level, whichever is greater. For construction within the 25 year flood plain, the infiltration or exfiltration must not exceed 10 gallons per inch diameter per mile of pipe per 24 hours at the same minimum test head. If the quantity of infiltration or exfiltration exceeds the maximum quantity specified, remedial action must be undertaken in order to reduce the infiltration or exfiltration to an amount within the limits specified.

(B) Low Pressure Air Test. The procedure for the low pressure air test must conform to the procedures described in ASTM C-828, ASTM C-924, ASTM F-1417 or other appropriate procedures, except for testing times. The test times must be as outlined in this section. For sections of pipe less than 36-inch average inside

$$T = \frac{0.085xDxK}{Q}$$

diameter, the following procedure must apply unless the pipe is to be joint tested. The pipe must be pressurized to 3.5 psi greater than the pressure exerted by groundwater above the pipe. Once the pressure is stabilized, the minimum time allowable for the pressure to drop from 3.5 pounds per square inch gauge to 2.5 pounds per square inch gauge must be computed from the following equation:

where:

T = time for pressure to drop 1.0 pound per square inch gauge in seconds
K = 0.000419 X D X L, but not less than 1.0
D = average inside pipe diameter in inches
L = length of line of same size being tested, in feet
Q = rate of loss, 0.0015 cubic feet per minute per square foot internal surface will be used.

STATE OF TEXAS
JOHN W. STRYBOS
64259
LICENSED
PROFESSIONAL ENGINEER
3/19/2003

SCS
NOTES

SH 45 / US 183 INTERCHANGE

HNTB ARCHITECTS ENGINEERS PLANNERS
The HNTB Companies

Texas Department of Transportation
© 2003 TEXAS TURNPIKE AUTHORITY DIVISION

DRAWING PREPARED BY: HNTB CORPORATION			CITY OF AUSTIN SHEET NO.
SHEET 2 OF 3			A10
FED. RD. DIV. NO.	FEDERAL AID PROJECT NO.		SHEET NO.
6	MG 2002 (243)		734B

DGN:	STATE	DIST.	COUNTY
CHK DGN:	TEXAS	14	WILLIAMSON
DWG:	CONT.	SECT.	JOB / HIGHWAY NO.
CHK DWG:	0683	01	069 / SH 45

Pen Table: I:\Jobs\32058\techprod\UTIL\plots\32058Uh.pen
Design Filename: \\eanw00\pmwork\Jobs\32058\TECHPROD\UTIL\Dwg\phe1\45wgn05.dgn

Scale: 1000.000000:1.000000
Plotted on: 19-MAR-2003 09:32

Since a K value of less than 1.0 will not be used, there are minimum times for each pipe diameter as outlined below:

Pipe Diameter (inches)	Minimum Time (seconds)	Length for Minimum (feet)	Time for Longer Length (seconds)
6	340	398	0.855(L)
8	454	298	1.520(L)
10	567	239	2.374(L)
12	680	199	3.419(L)
15	850	159	5.342(L)
18	1020	133	7.693(L)
21	1190	114	10.471(L)
24	1360	100	13.676(L)
27	1530	88	17.309(L)
30	1700	80	21.369(L)
33	1870	72	25.856(L)

The test may be stopped if no pressure loss has occurred during the first 25% of the calculated testing time. If any pressure loss or leakage has occurred during the first 25% of the testing period, then the test must continue for the entire test duration as outlined above or until failure. Lines with a 27-inch average inside diameter and larger may be air tested at each joint. Pipe greater than 36 inch diameter must be tested for leakage at each joint. If the joint test is used, a visual inspection of the joint must be performed immediately after testing. The pipe is to be pressurized to 3.5 psi greater than the pressure exerted by groundwater above the pipe. Once the pressure has stabilized, the minimum time allowable for the pressure to drop from 3.5 pounds per square inch gauge to 2.5 pounds per square inch gauge must be 10 seconds.

(C) Deflection Testing. Deflection tests must be performed on all flexible pipes. For pipelines with inside diameters less than 27 inches, a rigid mandrel must be used to measure deflection. For pipelines with an inside diameter of 27 inches and greater, a method approved by the executive director must be used to test for vertical deflections. Other methods must provide a precision of ± two tenths of one percent (0.2 %) deflection. The test must be conducted after the final backfill has been in place at least 30 days. No pipe will exceed a deflection of five percent. If a pipe should fail to pass the deflection test, the problem must be corrected and a second test must be conducted after the final backfill has been in place an additional 30 days. The tests must be performed without mechanical pulling devices. The design engineer should recognize that this is a maximum deflection criterion for all pipes and a deflection test less than five percent may be more appropriate for specific types and sizes of pipe. Upon completion of construction, the design engineer or other Texas Licensed Professional Engineer appointed by the owner must certify, to the Executive Director, that the entire installation has passed the deflection test. This certification may be made in conjunction with the notice of completion required in §317.1(e)(1) of this title (relating to General Provisions). This certification must be provided for the Commission to consider the requirements of the approval to have been met.

(i) The rigid mandrel shall have an outside diameter (O.D.) equal to 95% of the inside diameter (I.D.) of the pipe. The inside diameter of the pipe, for the purpose of determining the outside diameter of the mandrel, shall be the average outside diameter minus two minimum wall thicknesses for O.D. controlled pipe and the average inside diameter for I.D. controlled pipe, all dimensions shall be per appropriate standard. Statistical or other "tolerance packages" shall not be considered in mandrel sizing.

(ii) The rigid mandrel shall be constructed of a metal or a rigid plastic material that can withstand 200 psi without being deformed. The mandrel shall have nine or more "runners" or "legs" as long as the total number of legs is an odd number. The barrel section of the mandrel shall have a length of at least 75% of the inside diameter of the pipe. A proving ring shall be provided and used for each size mandrel in use.

(iii) Adjustable or flexible mandrels are prohibited. A television inspection is not a substitute for the deflection test. A deflectometer may be approved for use on a case by case basis. Mandrels with removable legs or runners may be accepted on a case by case basis.

17. All manholes must be tested to meet or exceed the requirements of 30 TAC §317.2(c)(5)(H).

18. All private service laterals must be inspected and certified in accordance with 30 TAC §213.5(c)(3)(I). After installation of and, prior to covering and connecting a private service lateral to an existing organized sewage collection system, a Texas Licensed Professional Engineer, Texas Registered Sanitarian, or appropriate city inspector must visually inspect the private service lateral and the connection to the sewage collection system, and certify that it is constructed in conformity with the applicable provisions of this section. The owner of the collection system must maintain such certifications for five years and forward copies to the appropriate regional office upon request. Connections may only be made to an approved sewage collection system.

STATE OF TEXAS
JOHN W. STRYBOS
64259
LICENSED
PROFESSIONAL ENGINEER
3/19/2003

SCS
NOTES

SH 45 / US 183 INTERCHANGE

HNTB ARCHITECTS ENGINEERS PLANNERS
The HNTB Companies

Texas Department of Transportation
© 2003 TEXAS TURNPIKE AUTHORITY DIVISION

DRAWING PREPARED BY: HNTB CORPORATION			CITY OF AUSTIN SHEET NO.
SHEET 3 OF 3			A11
FED. RD. DIV. NO.	FEDERAL AID PROJECT NO.		SHEET NO.
6	MG 2002 (243)		734C
DGN:	STATE	DIST.	COUNTY
CHK DGN:	TEXAS	14	WILLIAMSON
DWN:	CONT.	SECT.	JOB	HIGHWAY NO.
CHK DWN:	0683	01	069	SH 45

Pen Table: I:\Jobs\32058\techprod\UTIL\plots\32058Uh.pen
Design Filename: \\sanw00\pmwork\Jobs\32058\TECHPROD\UTIL\Dwg\phal\45wgn06.dgn

Scale: 1000.000000:1.000000
Plotted on: 19-MAR-2003 17:04

Wastewater Line "A"

Phase I – WWL "A" Sta. 0+00 to Sta. 8+25. Construct 825 LF 12" WWL open cut at line and grade indicated and manholes A22, A23, A24, and A25.

Phase II – WWL "A" Sta. 8+64.05. Construct wastewater manhole A26.

Phase III – WWL "A" Sta. 8+25 to Sta. 8+64.05. Construct 37 LF 12" WWL w/ 34 LF casing pipe at line and grade indicated. Connect to manhole A27.

WWL "A" Sta. 8+64.05 to Sta. 9+42. Connect to manhole A27. Construct 78 LF 12" WWL w/ 73 LF casing pipe at line and grade indicated.

Phase IV – WWL "A" Sta. 9+42 to Sta. 11+15. Construct 173 LF 12" WWL w/ 173 LF casing pipe at line and grade indicated open cut.

Phase V – WWL "A" Sta. 12+41.07. Construct wastewater manhole A27. Install 25 LF PCTB at WWL "A" Sta. 11+20, parallel to and at west edge of existing pavement. Channelizing devices shall be used to divert traffic away from work area.

Phase VI – WWL "A" Sta. 11+15 to Sta. 12+41.07. Construct 126 LF 12" WWL w/ 121 LF casing pipe at line and grade indicated. Connect to wastewater manhole A27. Construct WWL "A1" – 31 LF 21" WWL at line and grade indicated to existing wastewater manhole.

Phase VII – WWL "A" Sta. 12+41.07 to Sta. 17+06.59. Construct 466 LF 21" WWL at line and grade indicated open cut and manholes A28 and A29.



3/19/2003

WATER & WASTEWATER PHASING NARRATIVE

SH 45 / US 183 INTERCHANGE

HNTB ARCHITECTS ENGINEERS PLANNERS
The HNTB Companies

Texas Department of Transportation

© 2003 TEXAS TURNPIKE AUTHORITY DIVISION

DRAWING PREPARED BY: HNTB CORPORATION				CITY OF AUSTIN SHEET NO.
SHEET 1 OF 2				A12
FED. RD. DIV. NO.	FEDERAL AID PROJECT NO.			SHEET NO.
6	MG 2002 (243)			734D
DGN:	STATE	DIST.	COUNTY	
CHK DGN:	TEXAS	14	WILLIAMSON	
DWN:	CONT.	SECT.	JOB	HIGHWAY NO.
CHK DWN:	0683	01	069	SH 45

Pen Table: I:\Jobs\32058\techprod\UTIL\plots\32058Uh.pen
Design Filename: \\sanw00\pmwork\Jobs\32058\TECHPROD\UTIL\Dwg\phs1\45wgn07.dgn

Scale: 1000.000000:1.000000
Plotted on: 19-MAR-2003 17:04

Section 8 Water and Wastewater Line Construction Phasing

Water Line "A"
Phase I – Install 125 LF PTCB adjacent to outside SB lane of Ridgeline Blvd. Channelizing devices shall be used to divert traffic around proposed work area. Pavement shall be restored according to the Cutting and Restoring of Pavement Details (Austin District). Traffic control shall follow one-lane closure standard TCP (2-6A).

Phase II – WL "A" Sta. 0+29 to Sta. 1+17. Construct 88 LF 12" WL w/ 24" casing pipe. Install gate valve and fire protection service on eastern side of Ridgeline Blvd.

Phase III – WL "A" Sta. 0+00 to Sta. 0+29. Install 12" x 16" cross, gate valve, and fire protection service.

Phase IV – Install blind flanges on existing 12" to be abandoned. Abandon 12" water line in place. Cap existing 6" fire lead. Remove and salvage existing fire hydrant assembly.

Water Line "B"
Phase I – WL "B-1" Sta. 0+00 to Sta. 0+48. Construct WL "B-1" open cut. Connect to existing 24" WL and to existing 48" WL. Cap existing 30" WL to be abandoned.

Phase II – WL "B" Sta. 0+00 to Sta. 0+56. Construct WL "B" open cut. Connect to existing 30" WL. Cut, cap, and abandon in place existing 30" WL as shown.

Phase III – WL "B" Sta. 0+56 to Sta. 3+23. Construct 267 LF 30" WL open cut.

Phase IV – WL "B" Sta. 3+23 to Sta. 4+23. Construct 100 LF 30" WL w/ 48" casing pipe.

Water Line "C"
Phase I – WL "C" Sta. 0+00 to Sta. 8+41.63. Connect to existing 12" WL. Construct 842 LF 12" WL. Install WL appurtenances.

Phase II – WL "C-1" Sta. 0+00 to Sta. 0+31. Construct 31 LF 16 WL. Connect to WL "C" and to existing 16" WL.

Water Line "D"
Phase I – WL "D" Sta. 0+00 to Sta. 0+46. Connect to existing 24" WL. Construct 46 LF 24" WL open cut. Install WL appurtenances.

Phase II – WL "D". Remove existing 24" WL as indicated and plug at Sta. 1+70. Construct 124 LF 24" WL w/ 36" casing pipe.

Phase III – WL "D" Sta. 1+70 to Sta. 4+65. Construct 295 LF 24" WL open cut.

Phase IV – WL "D" Sta. 4+65 to Sta. 5+08. Construct 43 LF 24" WL w/ 36" casing pipe.

Phase V – WL "D" Sta. 5+08 to Sta. 10+87. Construct 579 LF 24" WL open cut. Install WL appurtenances.

Note: Existing 24" WL to be abandoned in place before placement of new permanent pavement.

Water Line "D-1"
Phase I – WL "D-1" Sta. 0+00 to Sta. 2+50. Construct 250 LF 16" WL open cut. Install WL appurtenances.

Phase II – WL "D-1" Sta. 2+50 to Sta. 2+92. Construct 42 LF 16" WL w/ 24" casing pipe.

Phase III – WL "D-1" Sta. 2+92 to Sta. 24+25. Construct 2,133 LF 16" WL open cut. Install WL appurtenances.

Phase IV – WL "D-1" Sta. 24+25 to Sta. 26+50. Construct 100 LF 16" WL w/ 24" casing pipe (Sta. 24+25 to Sta. 25+25). Construct 70 LF 16" WL open cut (Sta. 25+25 to Sta. 25+95). Install WL appurtenances. Construct 56 LF 16" WL w/ 24" casing pipe (Sta. 25+95 to Sta. 26+51).

Phase V – WL "D-1" Sta. 26+51 to Sta. 29+75. Construct 324 LF 16" WL open cut. Install WL appurtenances. Connect to existing 16" WL.

Water Line "D-2"
Phase I – WL "D-2" Sta. 0+00 to Sta. 6+10. Connect to WL "D". Construct 610 LF 24" WL w/ 590 LF 36" casing pipe as indicated on plans. Connect to existing 24" WL.

Phase II – WL "D-2". Cut and Plug existing 24" WL as indicated. Abandon existing water lines in place as indicated.



WATER & WASTEWATER PHASING NARRATIVE

SH 45 / US 183 INTERCHANGE

HNTB ARCHITECTS ENGINEERS PLANNERS
The HNTB Companies

Texas Department of Transportation
© 2003 TEXAS TURNPIKE AUTHORITY DIVISION

DRAWING PREPARED BY: HNTB CORPORATION				CITY OF AUSTIN SHEET NO.
SHEET 2 OF 2				A13
FED. RD. DIV. NO.	FEDERAL AID PROJECT NO.			SHEET NO.
6	MG 2002 (243)			734E
DGN:	STATE	DIST.	COUNTY	
CHK DGN:	TEXAS	14	WILLIAMSON	
DWG:	CONT.	SECT.	JOB	HIGHWAY NO.
CHK DWG:	0683	01	069	SH 45

Pen Tablet: \Jobs\32058\techprod\UTIL\plots\32058uh.pen
Design Filename: \\eanw00\pmwork\Jobs\32058\TECHPROD\Util\Dwg\phs1\45wgn08.dgn

Scale: 400.000000:1.000000
Plotted on: 14-MAR-2003 11:45

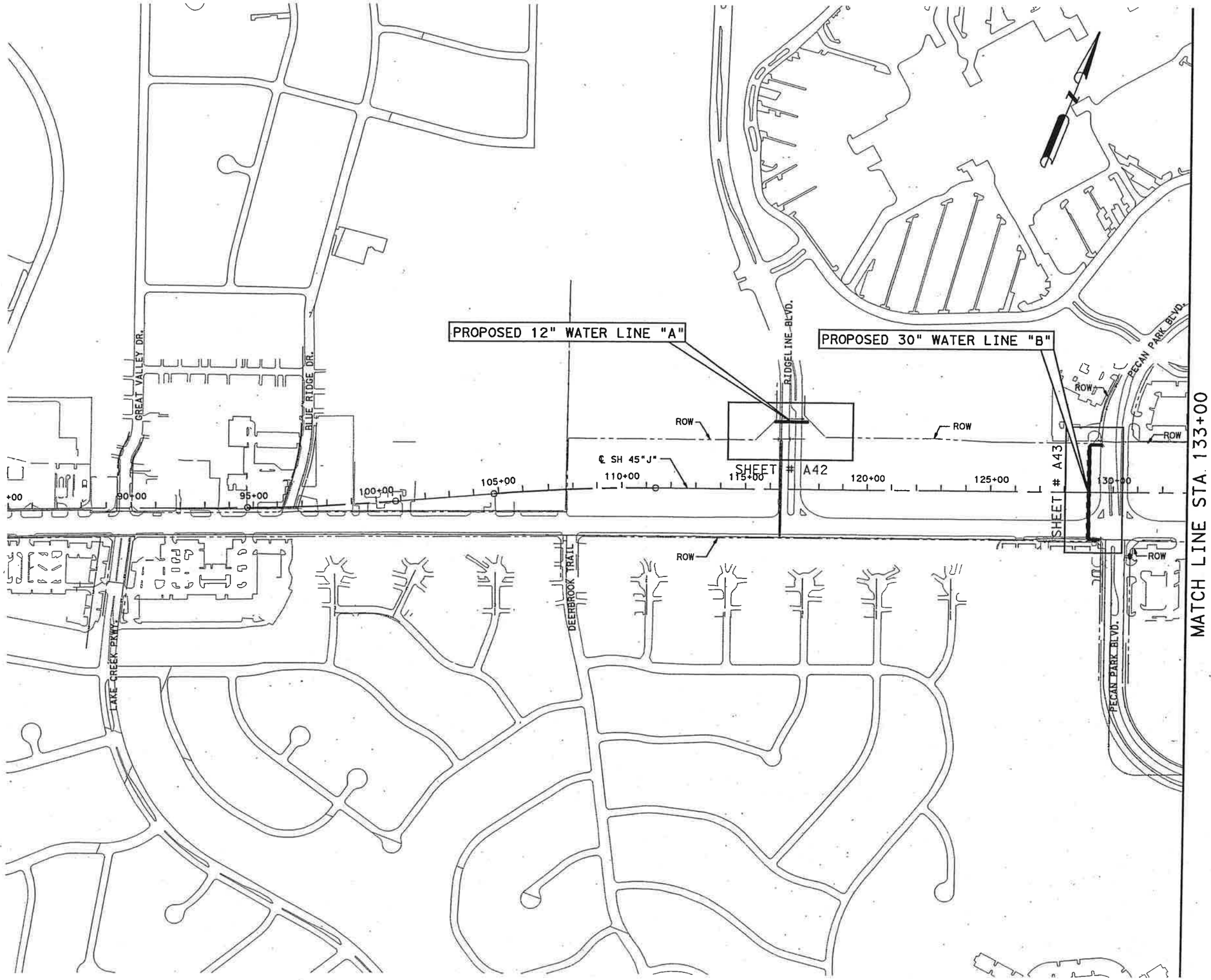

NOTE:

1. REFER TO "WATER DISTRIBUTION LAYOUT" FOR FURTHER DETAILS.
2. REFER TO "WASTEWATER COLLECTION LAYOUT" FOR FURTHER DETAILS.
3. REFER TO "WATER DISTRIBUTION INTERSECTION DETAILS" FOR FURTHER DETAILS.
4. REFER TO "WASTEWATER COLLECTION INTERSECTION DETAILS" FOR FURTHER DETAILS.

STATE OF TEXAS
JOHN W. STRYBOS
64259
LICENSED
PROFESSIONAL ENGINEER
3/19/2003

WATER/WASTEWATER DISTRIBUTION LAYOUT

STA 85+00 TO STA 133+00

SH 45 / US 183 INTERCHANGE

SCALE: PLAN 1":400'

HNTB ARCHITECTS ENGINEERS PLANNERS
The HNTB Companies

Texas Department of Transportation
© 2003 TEXAS TURNPIKE AUTHORITY DIVISION

DRAWING PREPARED BY: HNTB CORPORATION			CITY OF AUSTIN SHEET NO.
SHEET 1 OF 4			A14
FED. RD. DIV. NO.	FEDERAL AID PROJECT NO.		SHEET NO.
6	MG 2002 (243)		735
DGN: JEG	STATE	DIST.	COUNTY
CK. DGN: JWS	TEXAS	14	WILLIAMSON
DWG: JEG	CONT.	SECT.	JOB / HIGHWAY NO.
CHK. DWG: JWS	0683	01	069 / SH 45

Pen Tablet\32058\TECHPROD\UTIL\Plots\32058utility.pen
Design Filename: J:\Jobs\32058\TECHPROD\UTIL\Dwg\PHS1\45wum0801.dgn

Scale: 400.000000:1.000000
Plotted on: 14-MAR-2003 11:45

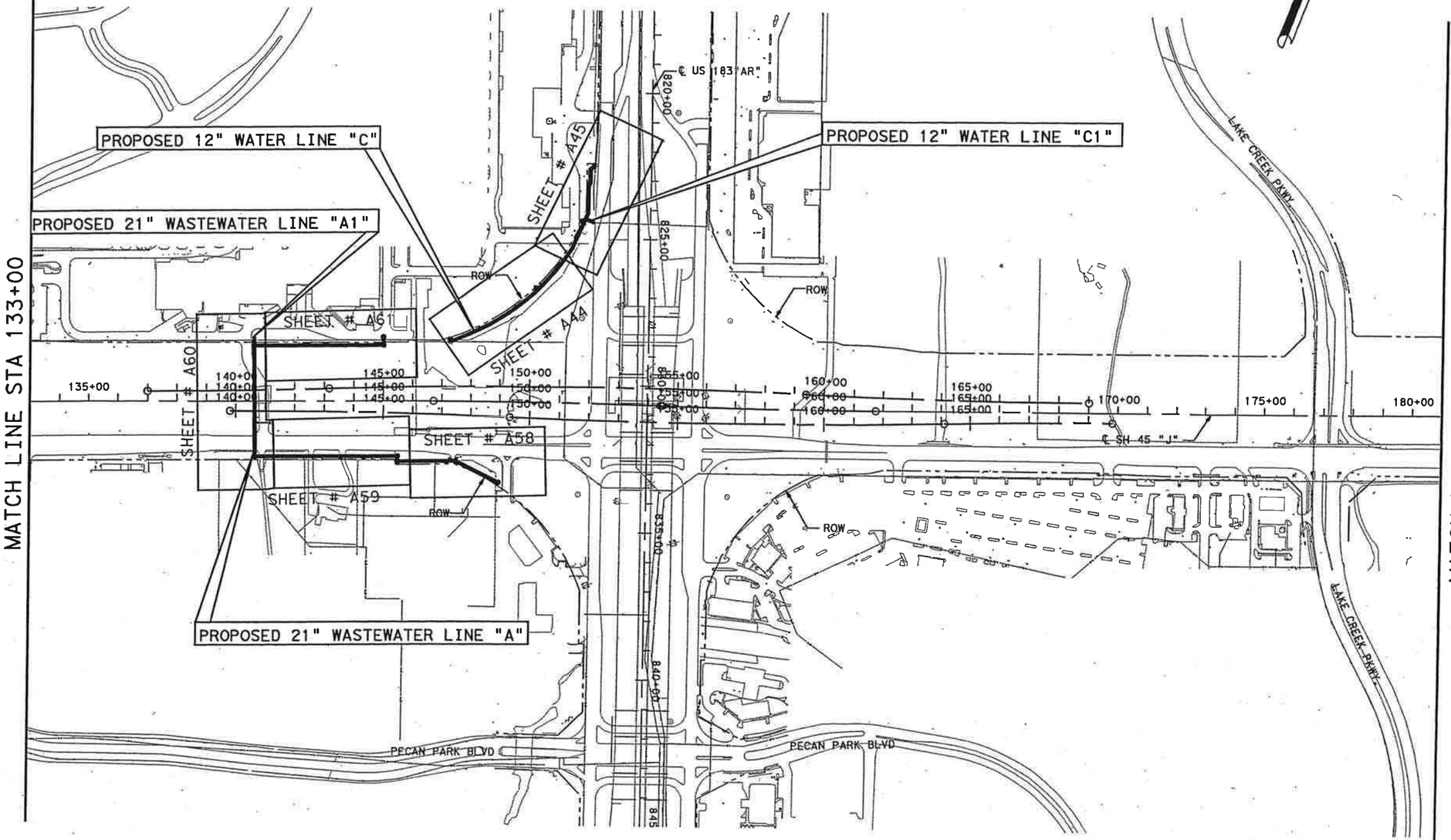

NOTE:

1. REFER TO "WATER DISTRIBUTION LAYOUT" FOR FURTHER DETAILS.
2. REFER TO "WASTEWATER COLLECTION LAYOUT" FOR FURTHER DETAILS.
3. REFER TO "WATER DISTRIBUTION INTERSECTION DETAILS" FOR FURTHER DETAILS.
4. REFER TO "WASTEWATER COLLECTION INTERSECTION DETAILS" FOR FURTHER DETAILS.

STATE OF TEXAS
JOHN W. STRYBOS
64259
LICENSED
PROFESSIONAL ENGINEER
3/9/2003

WATER/WASTEWATER DISTRIBUTION LAYOUT

STA 133+00 TO STA 181+00

SH 45 / US 183 INTERCHANGE

SCALE: PLAN 1": 400'

HNTB ARCHITECTS ENGINEERS PLANNERS
The HNTB Companies

Texas Department of Transportation
© 2003 TEXAS TURNPIKE AUTHORITY DIVISION

DRAWING PREPARED BY: HNTB CORPORATION			CITY OF AUSTIN SHEET NO.
SHEET 2 OF 4			A15
FED. RD. DIV. NO.	FEDERAL AID PROJECT NO.		SHEET NO.
6	MG 2002 (243)		736

DGN: JEG	STATE	DIST.	COUNTY	
CHK. DGN: JWS	TEXAS	14	WILLIAMSON	
DWG: JEG	CONT.	SECT.	JOB	HIGHWAY NO.
CHK. DWG: JWS	0683	01	069	SH 45

Pen Table: I:\Jobs\32058\TECHPROD\UTIL\Plots\32058Utility.pen
Design Filename: I:\Jobs\32058\TECHPROD\UTIL\Dwg\PHS1\45wum0802.dgn

Scale: 400.000000:1.000000
Plotted on: 14-MAR-2003 11:45

Pen Table: I:\Jobs\32058\TECHPROD\UTIL\Plots\32058utility.pen
Design Filename: I:\Jobs\32058\TECHPROD\UTIL\Dwg\PHS1\45wam0803.dgn

NOTE:

1. REFER TO "WATER DISTRIBUTION LAYOUT" FOR FURTHER DETAILS.
2. REFER TO "WASTEWATER COLLECTION LAYOUT" FOR FURTHER DETAILS.
3. REFER TO "WATER DISTRIBUTION INTERSECTION DETAILS" FOR FURTHER DETAILS.
4. REFER TO "WASTEWATER COLLECTION INTERSECTION DETAILS" FOR FURTHER DETAILS.

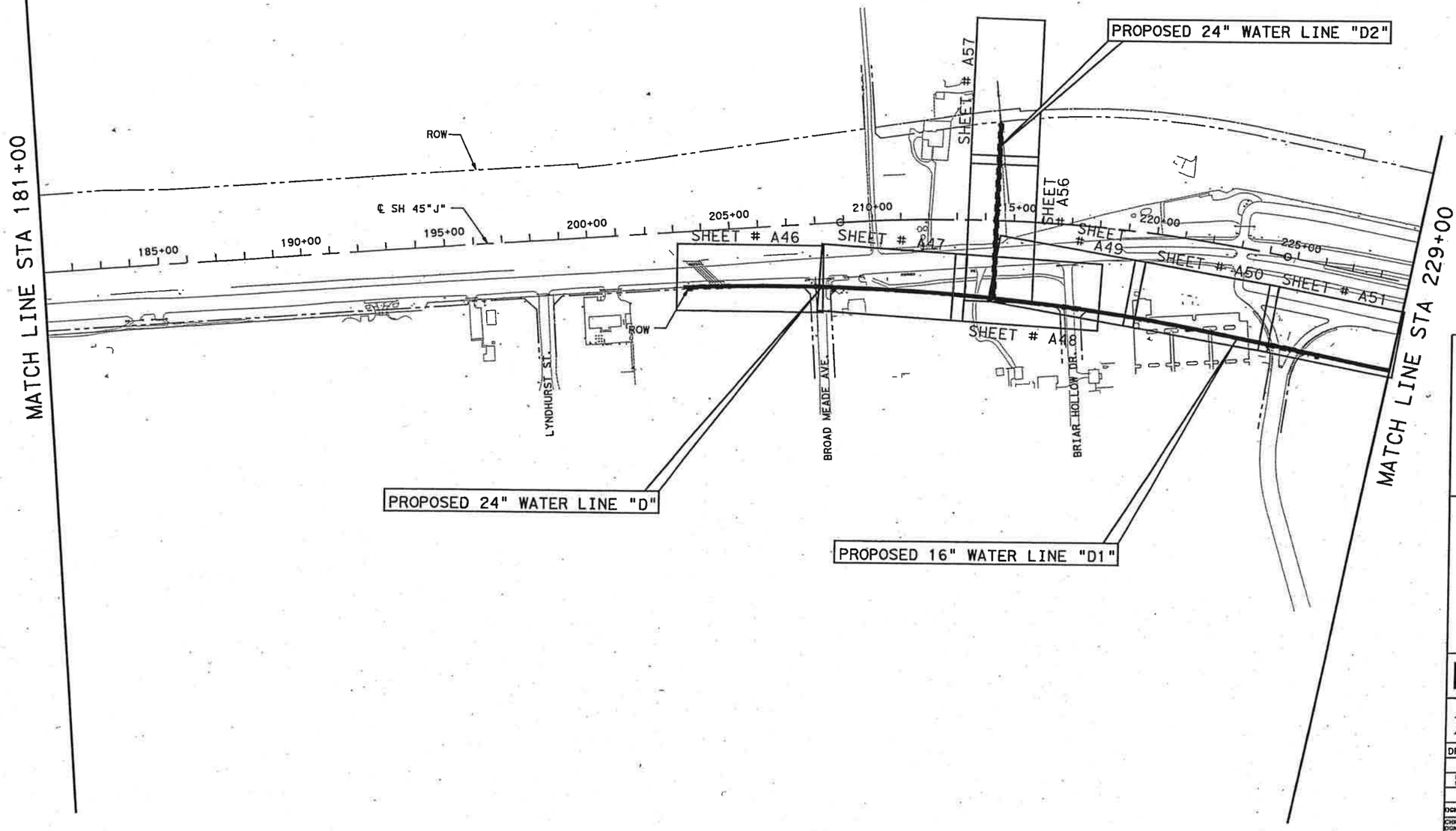

John W. Strybos
STATE OF TEXAS
JOHN W. STRYBOS
64259
LICENSED
PROFESSIONAL ENGINEER
3/19/2003

WATER/WASTEWATER DISTRIBUTION LAYOUT

STA 181+00 TO STA 229+00

SH 45 / US 183 INTERCHANGE

SCALE: PLAN 1": 400'

HNTB ARCHITECTS ENGINEERS PLANNERS
The HNTB Companies

Texas Department of Transportation
© 2003 TEXAS TURNPIKE AUTHORITY DIVISION

DRAWING PREPARED BY: HNTB CORPORATION			CITY OF AUSTIN SHEET NO.
SHEET 3 OF 4			A16
FED. RD. DIV. NO.	FEDERAL AID PROJECT NO.		SHEET NO.
6	MG 2002 (243)		737

DGN: JEG	STATE	DIST.	COUNTY	
CHK DGN: JWS	TEXAS	14	WILLIAMSON	
DWN: JEG	CONT.	SECT.	JOB	HIGHWAY NO.
CHK DWG: JWS	0683	01	069	SH 45

Scale: 400.000000:1.000000
Plotted on: 14-MAR-2003 11:46

Pen Table: I:\Jobs\32058\TECHPROD\UTIL\Plots\32058utility.pen
Design Filename: I:\Jobs\32058\TECHPROD\UTIL\Dwg\PHS1\45wum0804.dgn

NOTE:

1. REFER TO "WATER DISTRIBUTION LAYOUT" FOR FURTHER DETAILS.
2. REFER TO "WASTEWATER COLLECTION LAYOUT" FOR FURTHER DETAILS.
3. REFER TO "WATER DISTRIBUTION INTERSECTION DETAILS" FOR FURTHER DETAILS.
4. REFER TO "WASTEWATER COLLECTION INTERSECTION DETAILS" FOR FURTHER DETAILS.

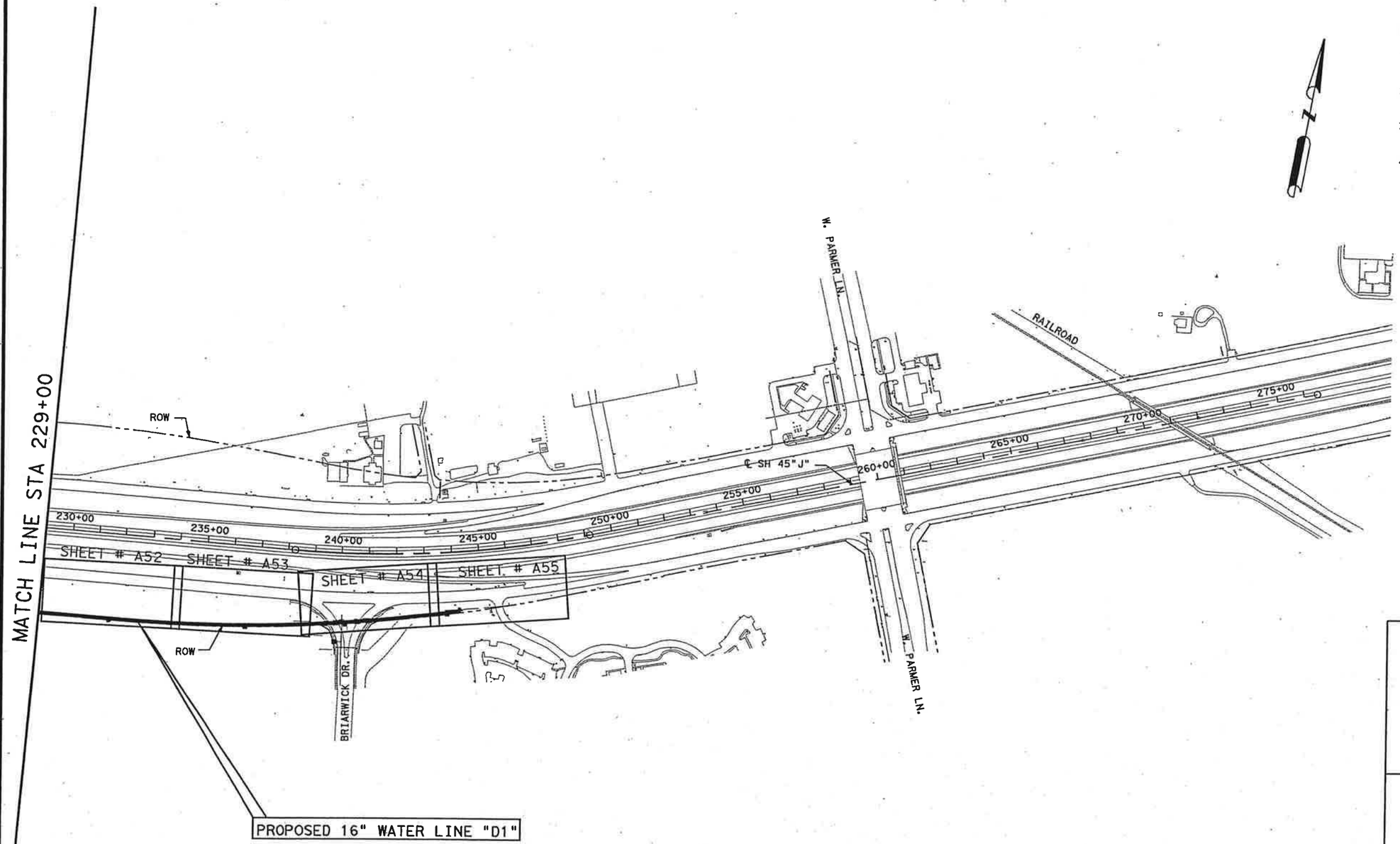

JOHN W. STRYBOS
64259
LICENSED
PROFESSIONAL ENGINEER
STATE OF TEXAS
3/19/2003

WATER/WASTEWATER DISTRIBUTION LAYOUT

STA 229+00 TO STA 254+50.00

SH 45 / US 183 INTERCHANGE

SCALE: PLAN 1": 400'

HNTB ARCHITECTS ENGINEERS PLANNERS
The HNTB Companies

Texas Department of Transportation
© 2003 TEXAS TURNPIKE AUTHORITY DIVISION

DRAWING PREPARED BY: HNTB CORPORATION			CITY OF AUSTIN SHEET NO.
SHEET 4 OF 4			A17
FED. RD. DIV. NO.	FEDERAL AID PROJECT NO.		SHEET NO.
6	MG 2002 (243)		738

DGN: JEG	STATE	DIST.	COUNTY	
CHK DGN: JWS	TEXAS	14	WILLIAMSON	
DWG: JEG	CONT.	SECT.	JOB	HIGHWAY NO.
CHK DWG: JWS	0683	01	069	SH 45

Scale: 100.000000:1.000000
Plotted on: 18-MAR-2003 10:10

Pen Tables: \\...32058\TECHPROD\UTIL\Plots\32058Uh.pen
Design Filena...: \Jobs\32058\TECHPROD\UTIL\Dwg\PHS1\45wdi.dgn

CITY OF AUSTIN –WATER DISTRIBUTION SYSTEM

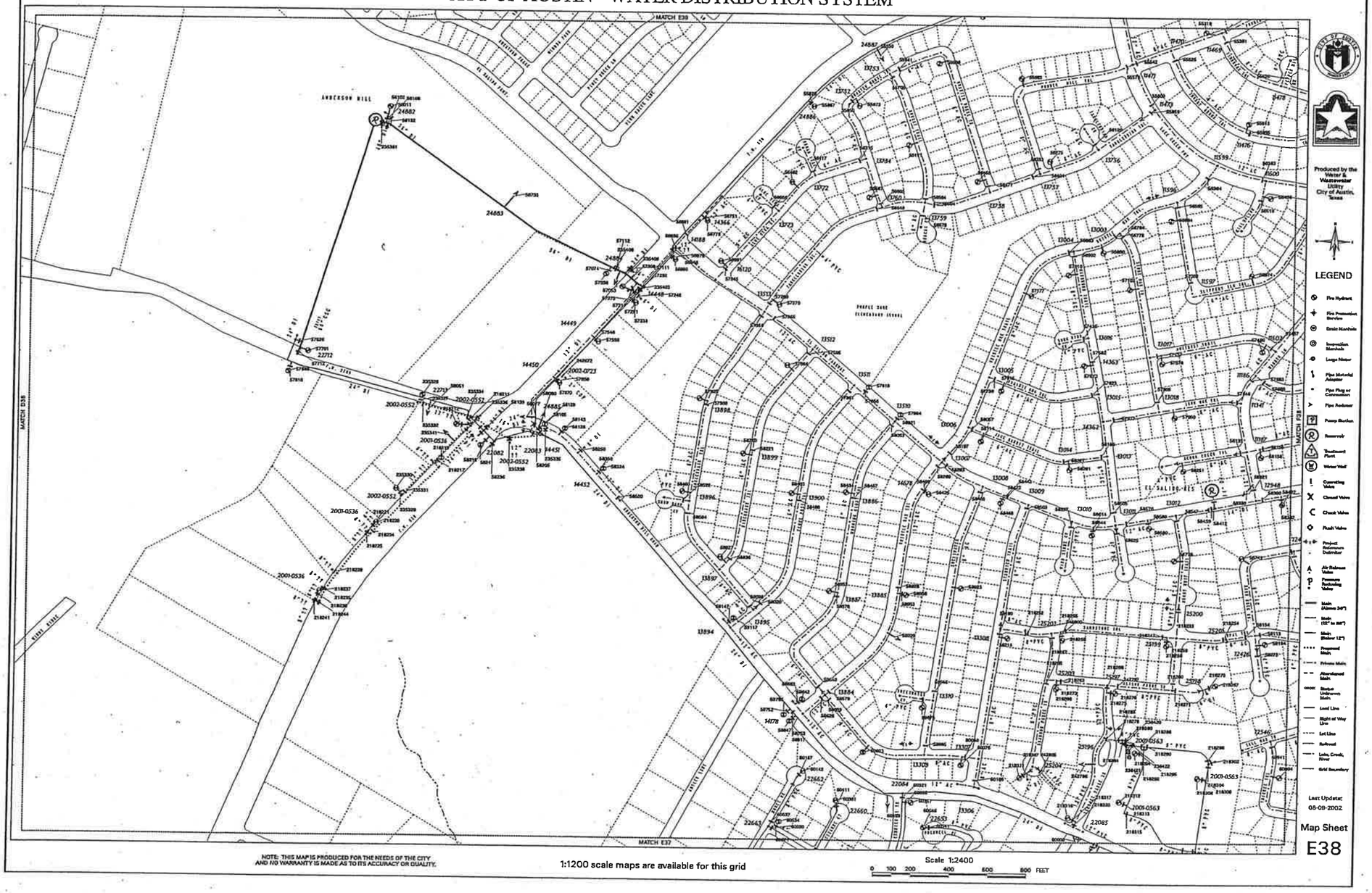

Produced by the Water & Wastewater Utility City of Austin, Texas

LEGEND

- Fire Hydrant
- Fire Protection Services
- Drain Manholes
- Inspection Manholes
- Large Meter
- Pipe Material Adapter
- Pipe Plug or Connection
- Pipe Reducer
- Pump Station
- Reservoir
- Treatment Plant
- Water Well
- Operating Valve
- Closed Valve
- Check Valve
- Flush Valve
- Project Reference Delimiter
- Air Release Valve
- Pressure Reducing Valve
- Main (Above 24")
- Main (12" to 24")
- Main (Below 12")
- Proposed Main
- Private Main
- Abandoned Main
- Status Undriven Main
- Land Line
- Right of Way Line
- Lot Line
- Railroad
- Lake, Creek, River
- Grid Boundary

Last Update: 08-09-2002

Map Sheet
E38

NO WORK ON THIS SHEET
FOR INFORMATION ONLY

John W. Strybos

STATE OF TEXAS
JOHN W. STRYBOS
64259
LICENSED
PROFESSIONAL ENGINEER

3/19/2003

WATER DISTRIBUTION LAYOUT

SH 45 / US 183 INTERCHANGE

HNTB ARCHITECTS ENGINEERS PLANNERS
The HNTB Companies

Texas Department of Transportation
© 2003 TEXAS TURNPIKE AUTHORITY DIVISION

DRAWING PREPARED BY: HNTB CORPORATION				CITY OF AUSTIN SHEET NO.
SHEET 1 OF 6				A18
FED. RD. DIV. NO.	FEDERAL AID PROJECT NO.			SHEET NO.
6	MG 2002 (243)			739
DGN: CDA	STATE	DIST.	COUNTY	
CHK DGN: JWS	TEXAS	14	WILLIAMSON	
DWG:	CONT.	SECT.	JOB	HIGHWAY NO.
CHK DWG:	0683	01	069	SH 45

Scale: 100.000000:1.000000
Plotted on: 18-MAR-2003 10:10

Pen Table is e\3205B\TECHPROD\UTIL\Plots\3205Buh.pen
Design File: I:\Jobs\3205B\TECHPROD\UTIL\Dwg\PHS1\45wd2.dgn

CITY OF AUSTIN –WATER DISTRIBUTION SYSTEM

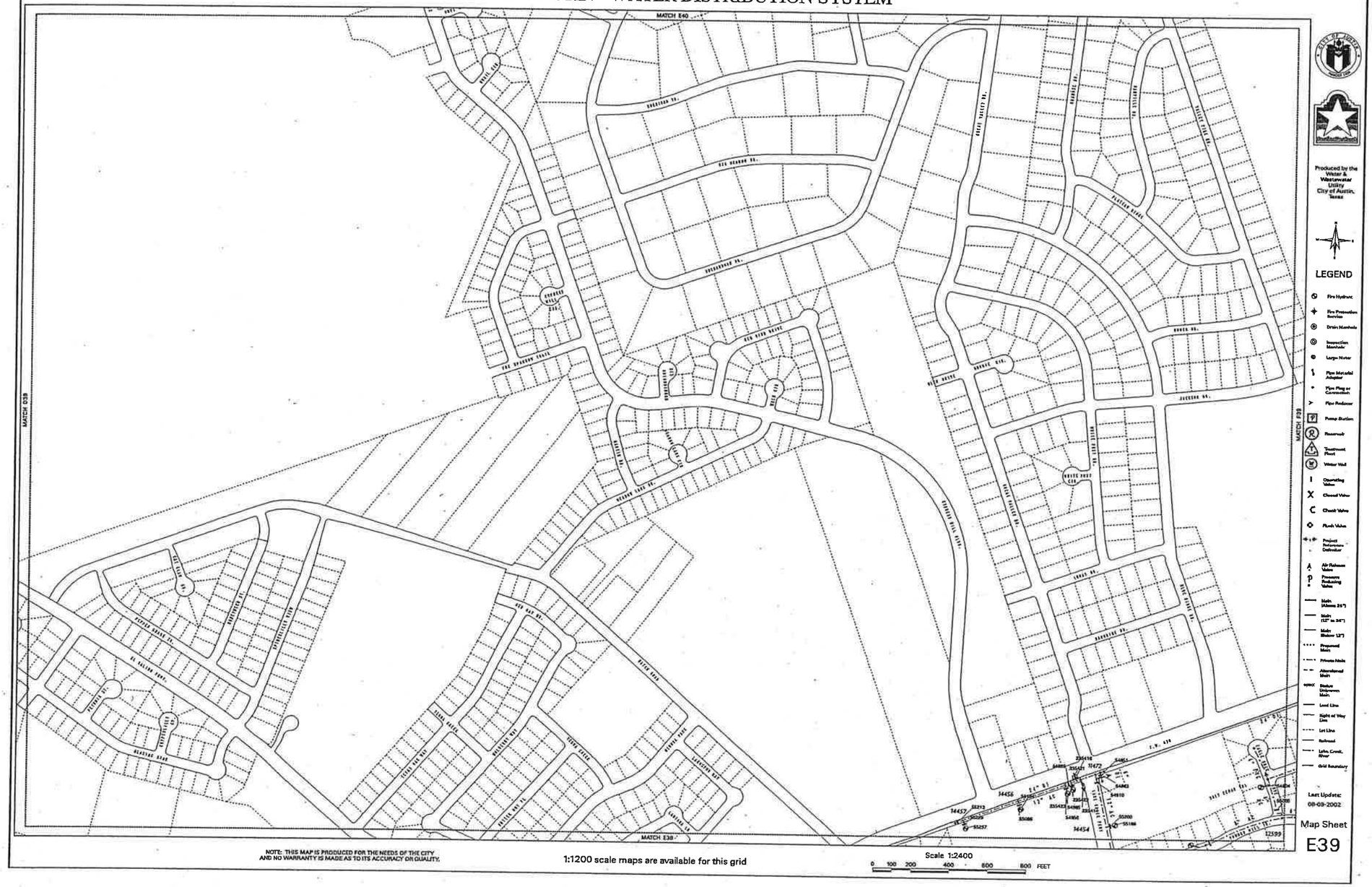

NO WORK ON THIS SHEET.
FOR INFORMATION ONLY

John W. Strybos
STATE OF TEXAS
JOHN W. STRYBOS
64259
LICENSED
PROFESSIONAL ENGINEER
3/19/2003

WATER DISTRIBUTION LAYOUT

SH 45 / US 183 INTERCHANGE

HNTB ARCHITECTS ENGINEERS PLANNERS
The HNTB Companies

Texas Department of Transportation
© 2003 TEXAS TURNPIKE AUTHORITY DIVISION

DRAWING PREPARED BY: HNTB CORPORATION				CITY OF AUSTIN SHEET NO.
SHEET 2 OF 6				A19
FED. RD. DIV. NO.	FEDERAL AID PROJECT NO.			SHEET NO.
6	MG 2002 (243)			740
DSN: CDA	STATE	DIST.	COUNTY	
CHK: JWS	TEXAS	14	WILLIAMSON	
DW:	CONT.	SECT.	JOB	HIGHWAY NO.
CHK:	0683	01	069	SH 45

Scale: 100.0000000:1.0000000
Plotted on: 18-MAR-2003 10:10

CITY OF AUSTIN –WATER DISTRIBUTION SYSTEM

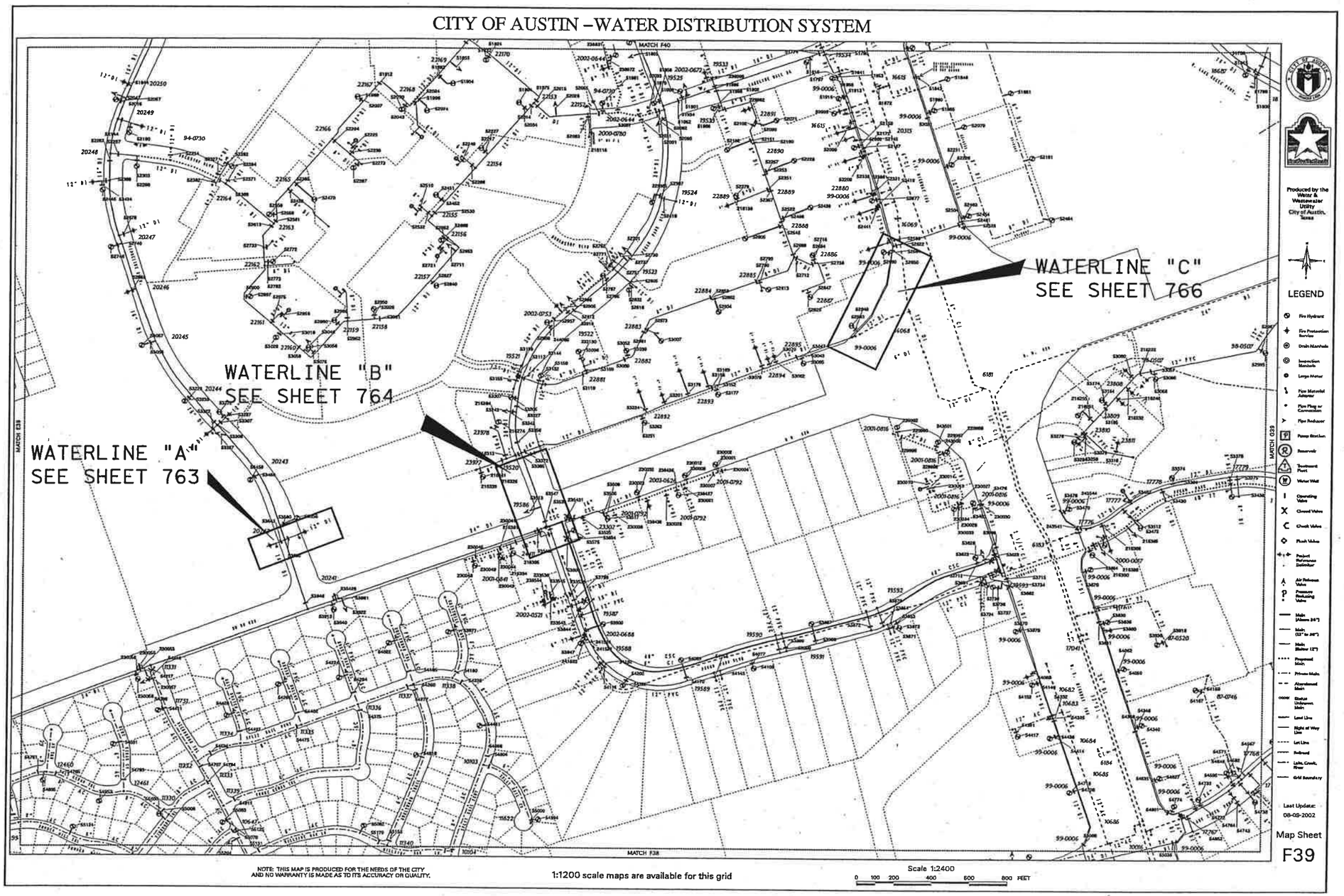

STATE OF TEXAS
JOHN W. STRYBOS
64259
LICENSED
PROFESSIONAL ENGINEER
3/19/2003

WATER DISTRIBUTION LAYOUT

SH 45 / US 183 INTERCHANGE

HNTB ARCHITECTS ENGINEERS PLANNERS
The HNTB Companies

Texas Department of Transportation
© 2003 TEXAS TURNPIKE AUTHORITY DIVISION

DRAWING PREPARED BY: HNTB CORPORATION			CITY OF AUSTIN SHEET NO.
SHEET 3 OF 6			A20
FED. RD. DIV. NO.	FEDERAL AID PROJECT NO.		SHEET NO.
6	MG 2002 (243)		741

DGN: CDA	STATE	DIST.	COUNTY
CHK DGN: JWS	TEXAS	14	WILLIAMSON
DWG:	CONT.	SECT.	JOB / HIGHWAY NO.
CHK DWG:	0683	01	069 SH 45

Pen Tables: s\32058\TECHPROD\Utils\Plots\32058Uh.pen
Design Files: I:\Jobs\32058\TECHPROD\UTIL\Dwg\PHS1\45wd3.dgn

Scale: 100.000000:1.000000
Plotted on: 18-MAR-2003 10:10

CITY OF AUSTIN –WATER DISTRIBUTION SYSTEM

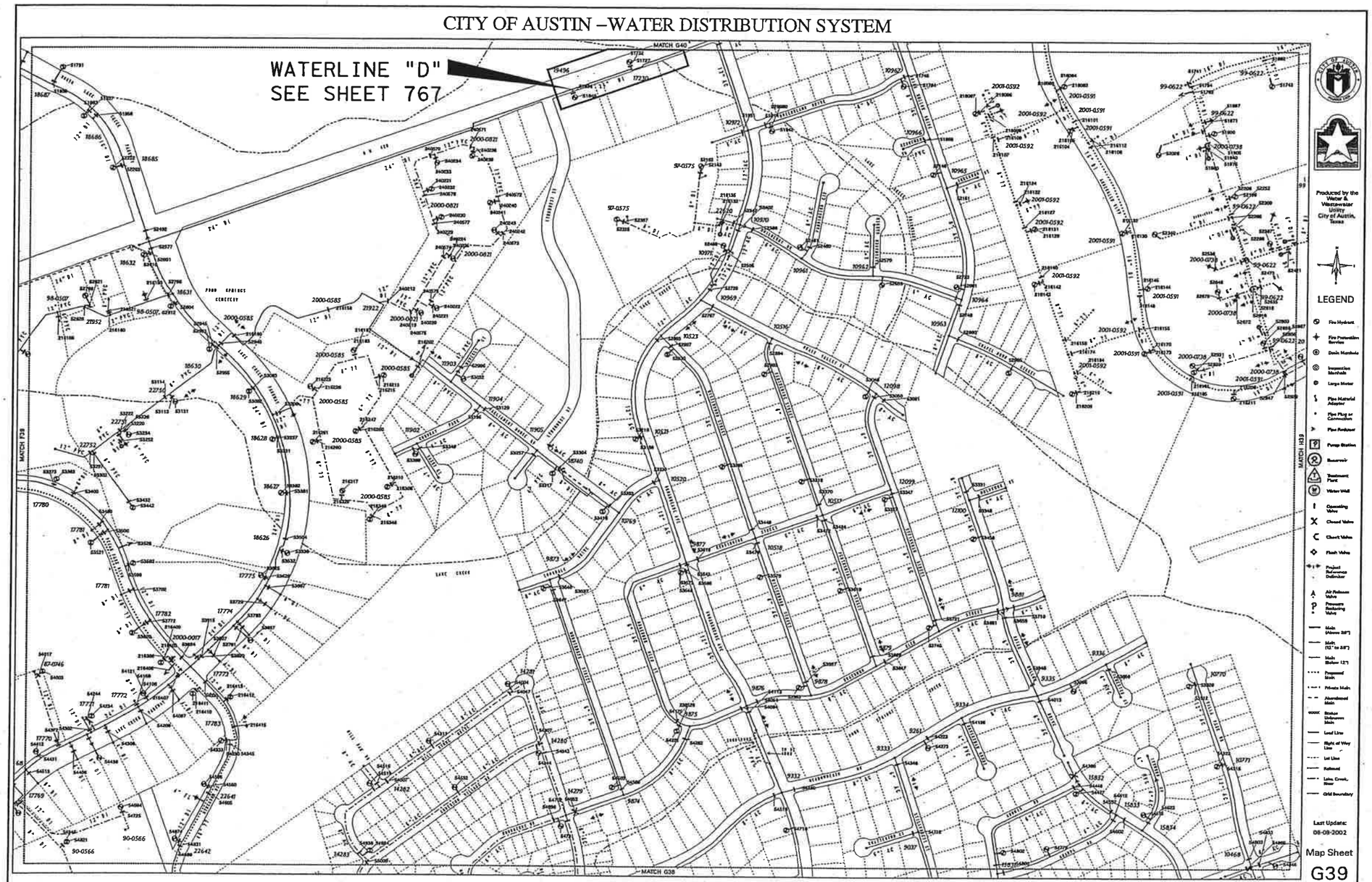

NOTE: THIS MAP IS PRODUCED FOR THE NEEDS OF THE CITY AND NO WARRANTY IS MADE AS TO ITS ACCURACY OR QUALITY.

1:1200 scale maps are available for this grid

Scale 1:2400
0 100 200 400 600 800 FEET

John W. Strybos
STATE OF TEXAS
JOHN W. STRYBOS
64259
LICENSED
PROFESSIONAL ENGINEER
3/19/2003

WATER DISTRIBUTION LAYOUT

SH 45 / US 183 INTERCHANGE

HNTB ARCHITECTS ENGINEERS PLANNERS
The HNTB Companies

Texas Department of Transportation
© 2003 TEXAS TURNPIKE AUTHORITY DIVISION

DRAWING PREPARED BY: HNTB CORPORATION			CITY OF AUSTIN SHEET NO.
SHEET 4 OF 6			A21
FED. RD. DIV. NO.	FEDERAL AID PROJECT NO.		SHEET NO.
6	MG 2002 (243)		742

DGN: CDA	STATE	DIST.	COUNTY
CHK DGN: JWS	TEXAS	14	WILLIAMSON
DWG:	CONT.	SECT.	JOB / HIGHWAY NO.
CHK DWG:	0683	01	069 / SH 45

Pen Table: I:\32058\TECHPROD\UTIL\Plots\32058Uh.pen
Design File: J:\Jobs\32058\TECHPROD\UTIL\Dwg\PHS1\45wd4.dgn

Scale: 100.000000:1.000000
Plotted on: 18-MAR-2003 10:10

CITY OF AUSTIN –WATER DISTRIBUTION SYSTEM

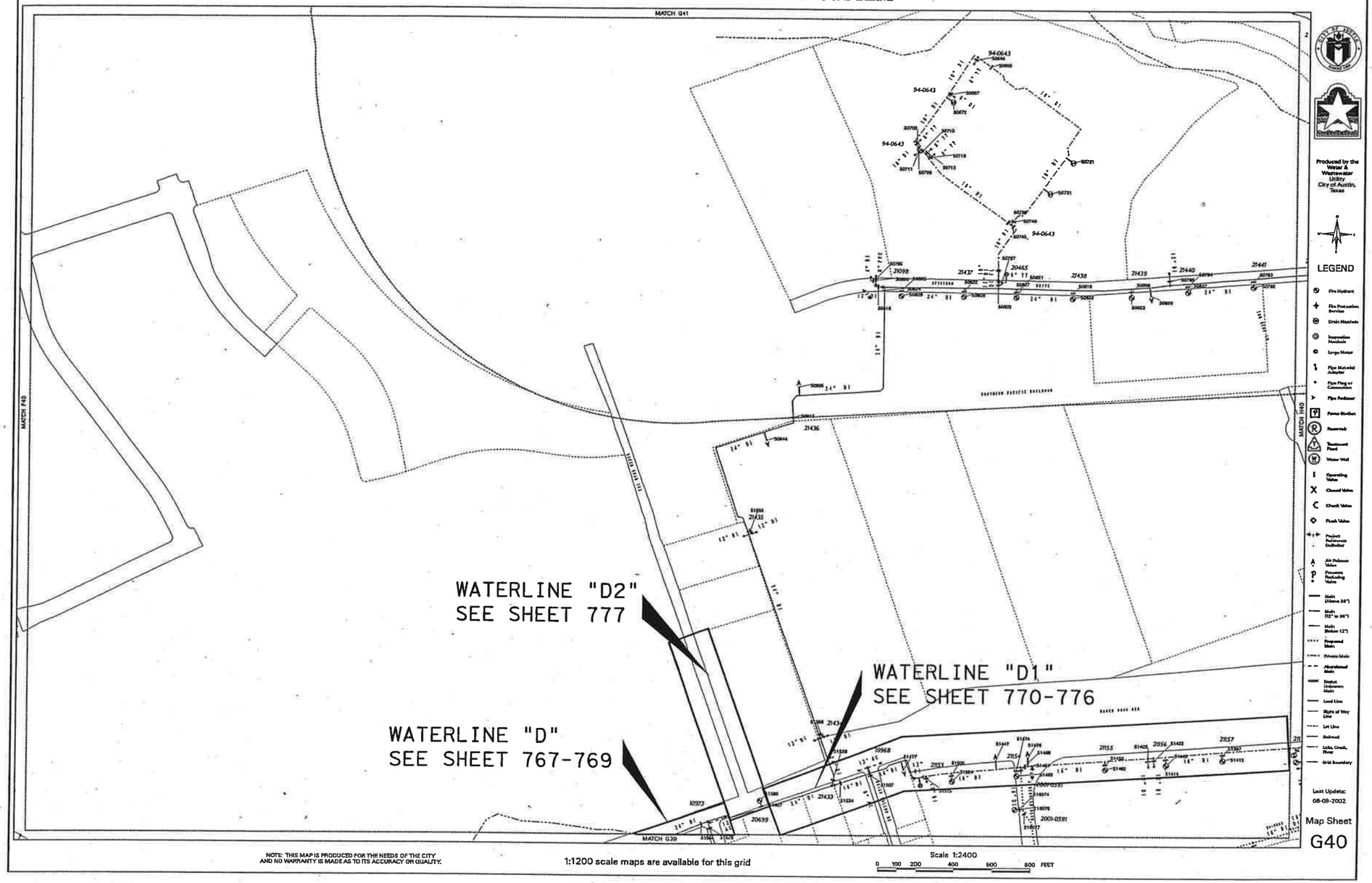

John W. Strybos
STATE OF TEXAS
JOHN W. STRYBOS
64259
LICENSED
PROFESSIONAL ENGINEER
3/19/2003

WATER DISTRIBUTION LAYOUT

SH 45 / US 183 INTERCHANGE

HNTB ARCHITECTS ENGINEERS PLANNERS
The HNTB Companies

Texas Department of Transportation
© 2003 TEXAS TURNPIKE AUTHORITY DIVISION

DRAWING PREPARED BY: HNTB CORPORATION				CITY OF AUSTIN SHEET NO.
SHEET 5 OF 6				A22
FED. RD. DIV. NO.	FEDERAL AID PROJECT NO.			SHEET NO.
6	MG 2002 (243)			743
DGN: CDA	STATE	DIST.	COUNTY	
CHK DGN: JWS	TEXAS	14	WILLIAMSON	
DWG:	CONT.	SECT.	JOB	HIGHWAY NO.
CHK DWG:	0683	01	069	SH 45

Pen Tablet: I:\32058\TECHPROD\UTIL\Plots\32058Uh.pen
Design Files: I:\Jobs\32058\TECHPROD\UTIL\Dwg\PHS1\45wd5.dgn

Scale: 100.000000:1.000000
Plotted on: 18-MAR-2003 10:10

Pen Table: I:\32058\TECHPROD\UTIL\Plots\32058UH.pen
Design File: I:\Jobs\32058\TECHPROD\UTIL\Dwg\PHS1\45wd6.dgn

CITY OF AUSTIN –WATER DISTRIBUTION SYSTEM

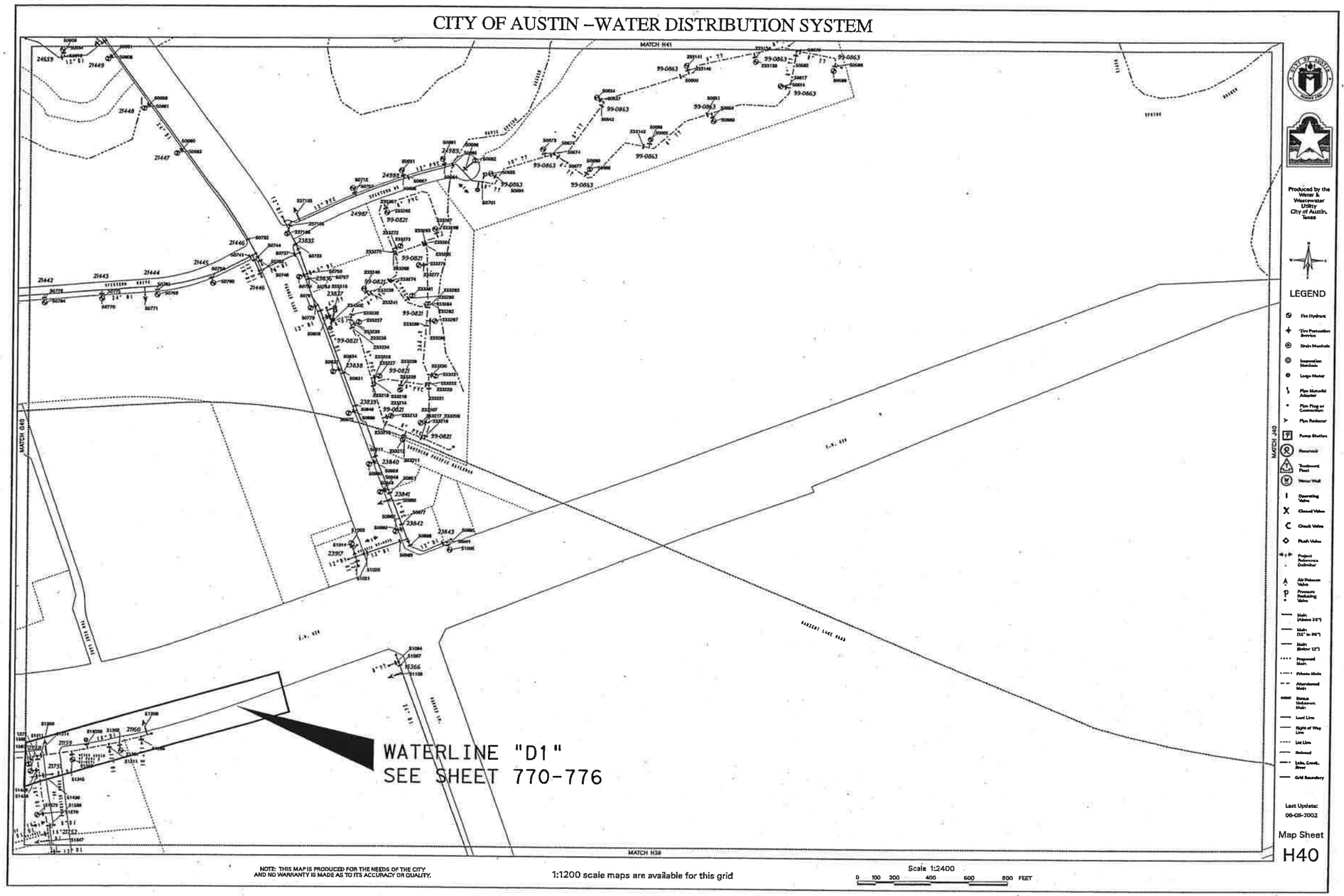

NOTE: THIS MAP IS PRODUCED FOR THE NEEDS OF THE CITY AND NO WARRANTY IS MADE AS TO ITS ACCURACY OR QUALITY.

1:1200 scale maps are available for this grid

Scale 1:2400
0 100 200 400 600 800 FEET

Produced by the Water & Wastewater Utility City of Austin, Texas

STATE OF TEXAS
JOHN W. STRYBOS
64259
LICENSED PROFESSIONAL ENGINEER
1/9/2003

WATER DISTRIBUTION LAYOUT

SH 45 / US 183 INTERCHANGE

HNTB ARCHITECTS ENGINEERS PLANNERS
The HNTB Companies

Texas Department of Transportation
© 2003 TEXAS TURNPIKE AUTHORITY DIVISION

DRAWING PREPARED BY: HNTB CORPORATION			CITY OF AUSTIN SHEET NO.
SHEET 6 OF 6			A23
FED. RD. DIV. NO.	FEDERAL AID PROJECT NO.		SHEET NO.
6	MG 2002 (243)		744
DGN: CDA	STATE	DIST.	COUNTY
CHK DSN: JWS	TEXAS	14	WILLIAMSON
DWN:	CONT.	SECT.	JOB / HIGHWAY NO.
CHK DWN:	0683	01	069 / SH 45

NOTE: REFER TO CITY OF AUSTIN "WATER DISTRIBUTION LAYOUT" SHEET A20.

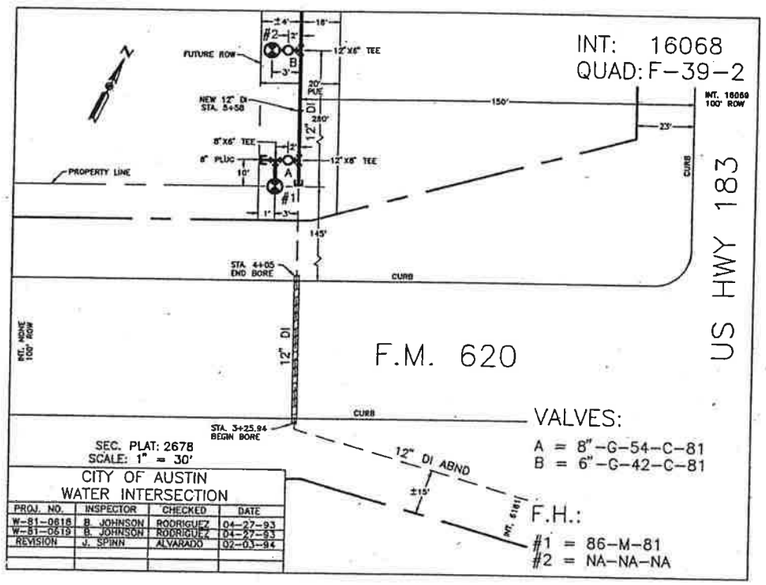

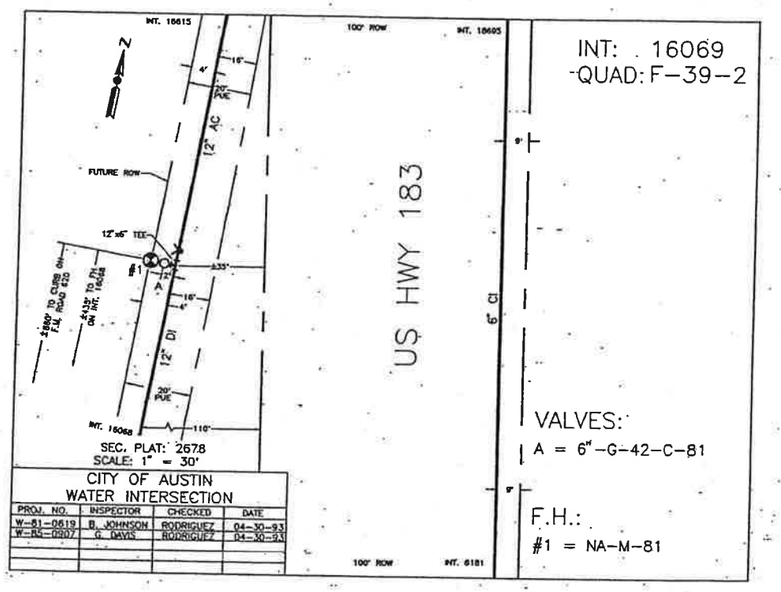

PROJECT Lakeline Plaza
WORK ORDER NO. 7204010
C.I.P. NO. C-97-792
INSPECTOR Julian Cabrera Jr.
9-28-98

22895
F-39-2

INT # 17

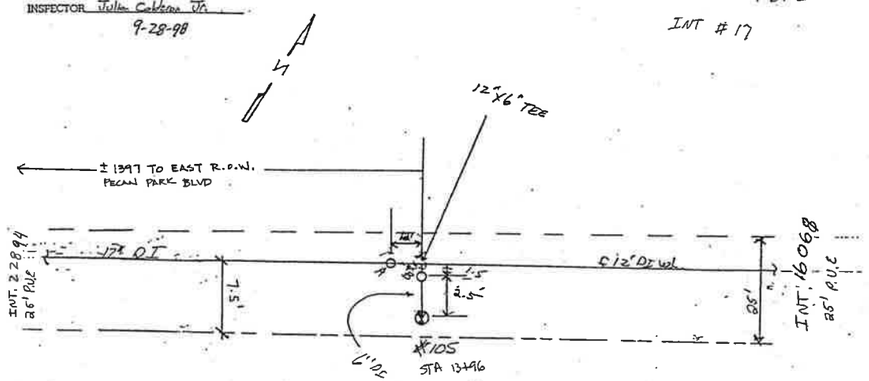

VALVES
A = 12"-G-78-97A-98
B = 6"-G-36-97A-98
F.H. #105-80-97A-98

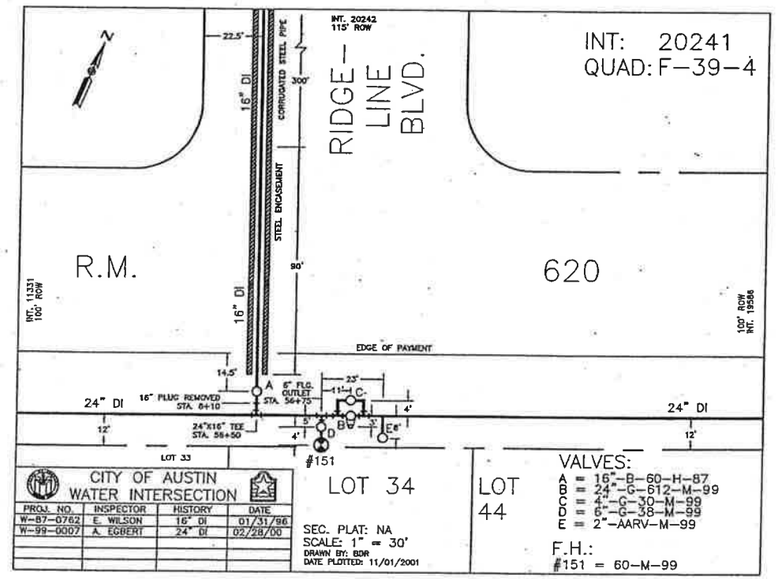

John W. Strybos
STATE OF TEXAS
JOHN W. STRYBOS
64259
LICENSED
PROFESSIONAL ENGINEER
3/19/2003

WATER DISTRIBUTION INTERSECTION DETAILS

SH 45 / US 183 INTERCHANGE

HNTB ARCHITECTS ENGINEERS PLANNERS
The HNTB Companies

Texas Department of Transportation
© 2003 TEXAS TURNPIKE AUTHORITY DIVISION

DRAWING PREPARED BY: HNTB CORPORATION			CITY OF AUSTIN SHEET NO.
SHEET 1 OF 8			A24
FED. RD. DIV. NO.	FEDERAL AID PROJECT NO.		SHEET NO.
6	MG 2002 (243)		745
DGN: CDA	STATE	DIST.	COUNTY
CK DGN: JWS	TEXAS	14	WILLIAMSON
DWN:	CONT.	SECT.	JOB / HIGHWAY NO.
CK DWG:	0683	01	069 / SH 45

Scale: 100.000000:1.000000
Plotted on: 18-MAR-2003 10:11

Pen Tables: \\Jobs\32058\techprod\UTIL\plots\32058Uh.pen
Design Filename: \\eanw00\pmwork\Jobs\32058\TECHPROD\Util\Dwg\phs1\45wdl001.dgn

Scale: 100.000000:1.000000
Plotted on: 18-MAR-2003 10:11

Pen Tables: \Jobs\32058\techprod\UTIL\plots\32058uh.pen
Design Filename: \\sanw00\pmwork\Jobs\32058\TECHPROD\UTIL\Dwg\phs1\45wdl002.dgn

NOTE: REFER TO CITY OF AUSTIN "WATER DISTRIBUTION LAYOUT" SHEET A20.

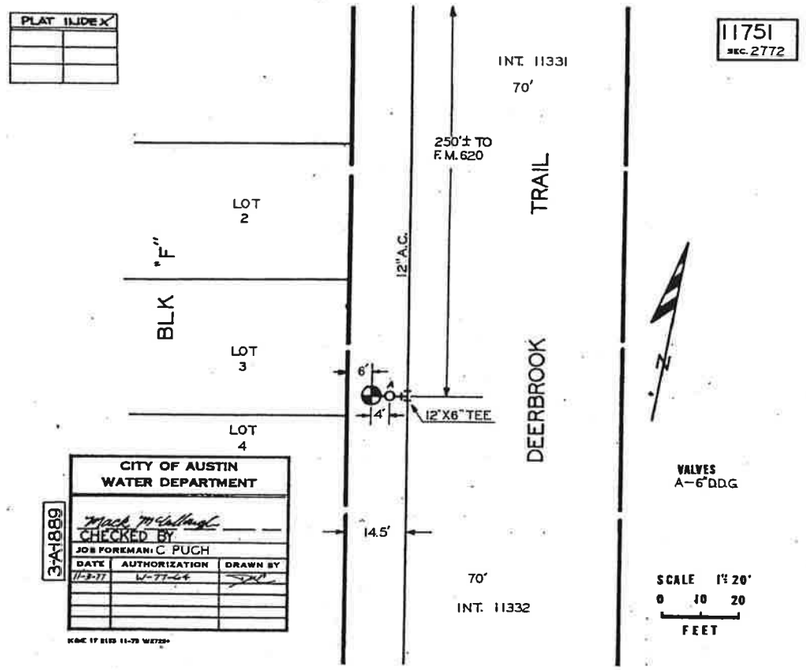

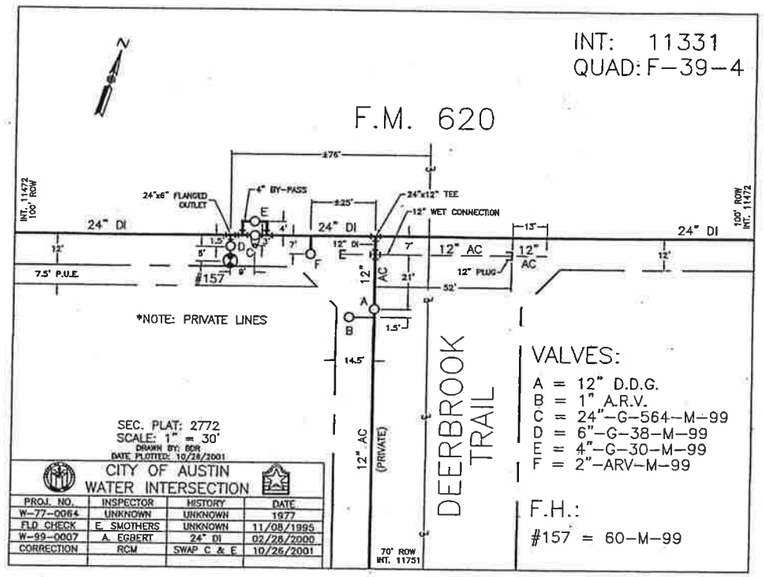

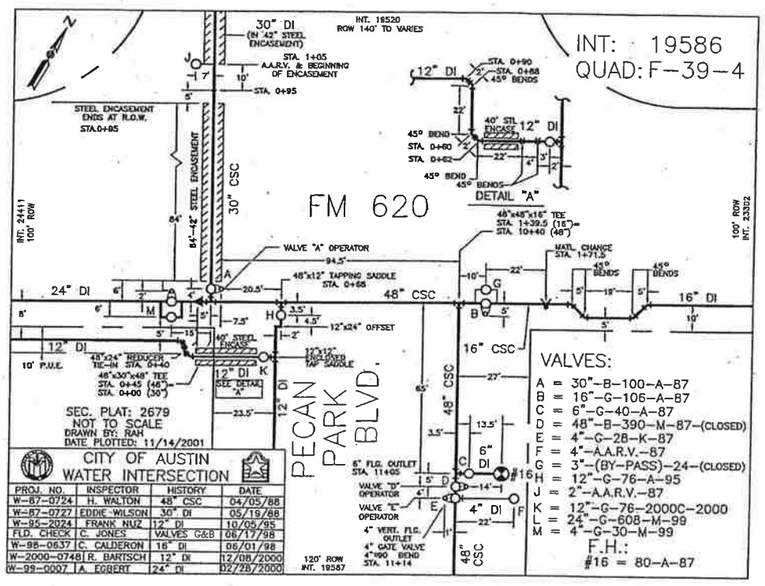

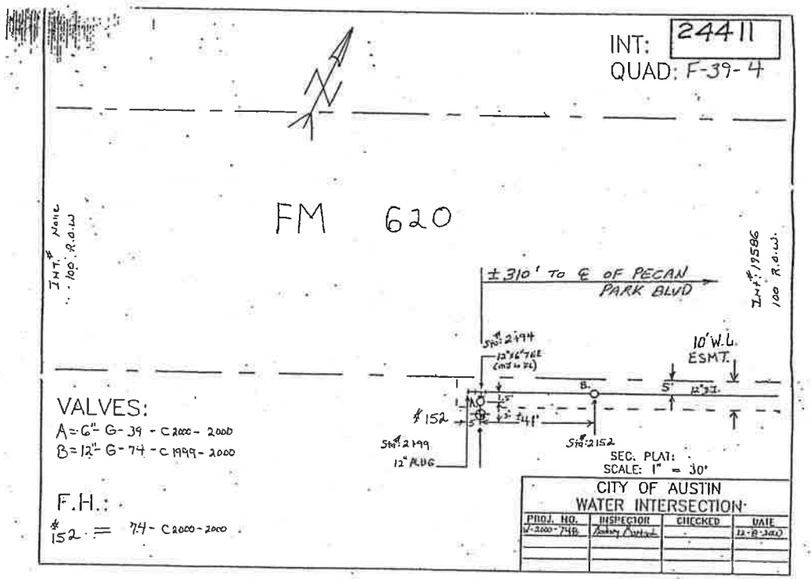

JOHN W. STRYBOS
64259
LICENSED
PROFESSIONAL ENGINEER
STATE OF TEXAS
3/19/2003

WATER DISTRIBUTION INTERSECTION DETAILS

SH 45 / US 183 INTERCHANGE

HNTB ARCHITECTS ENGINEERS PLANNERS
The HNTB Companies

Texas Department of Transportation
© 2003 TEXAS TURNPIKE AUTHORITY DIVISION

DRAWING PREPARED BY: HNTB CORPORATION			CITY OF AUSTIN SHEET NO.
SHEET 2 OF 8			A25
FED. RD. DIV. NO.	FEDERAL AID PROJECT NO.		SHEET NO.
6	MG 2002 (243)		746

DSN: CDA	STATE	DIST.	COUNTY
CHK: JWS	TEXAS	14	WILLIAMSON
DWN:	CONT.	SECT.	JOB	HIGHWAY NO.
CHK:	0683	01	069	SH 45

Scale: 100.000000:1.000000
Plotted on: 18-MAR-2003 10:11

NOTE: REFER TO CITY OF AUSTIN "WATER DISTRIBUTION LAYOUT" SHEET A22.

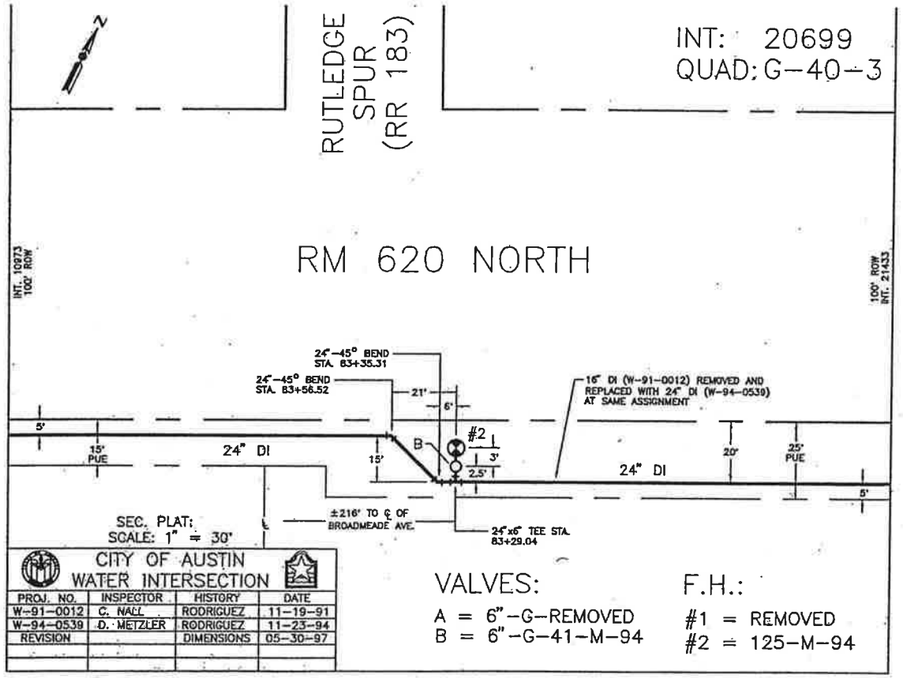

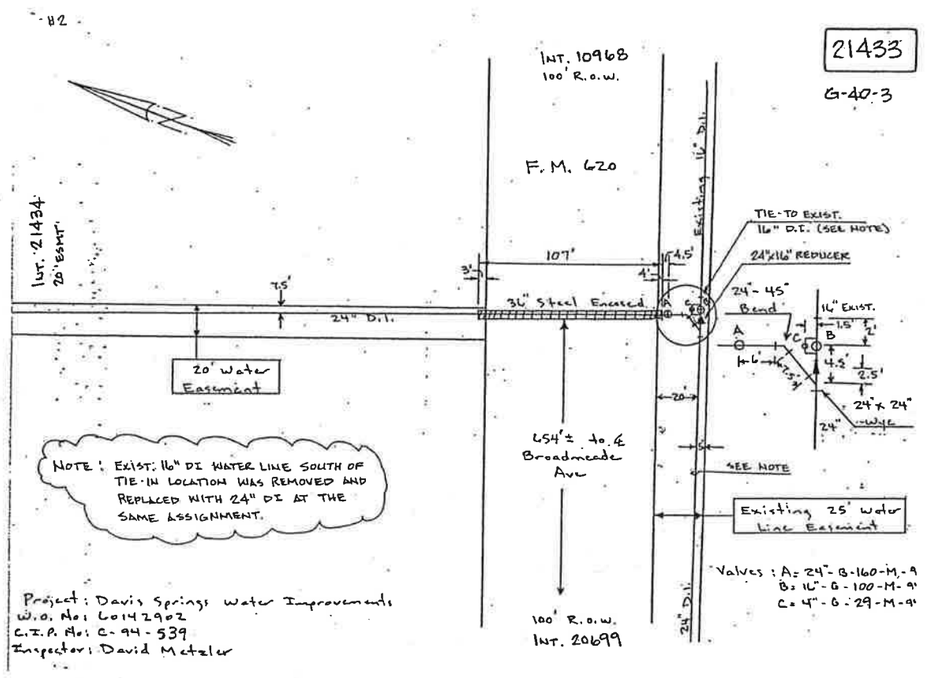

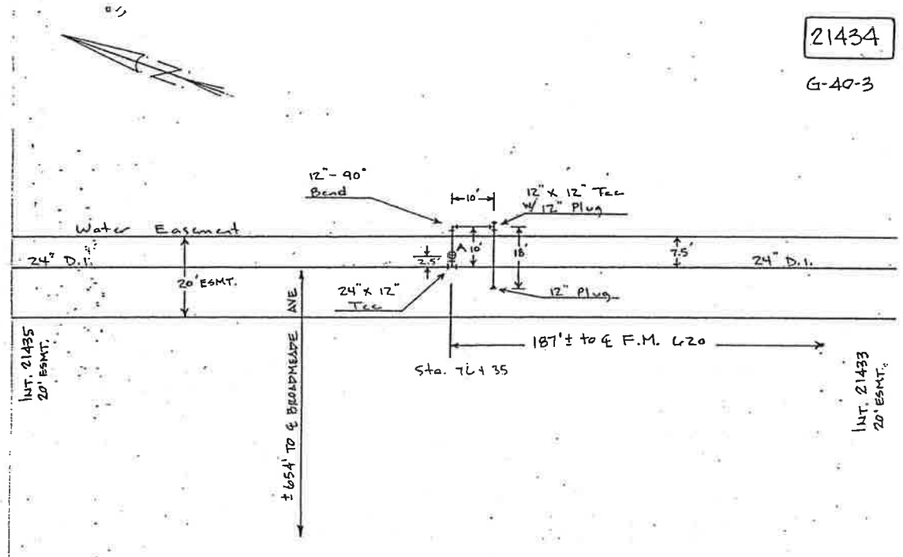

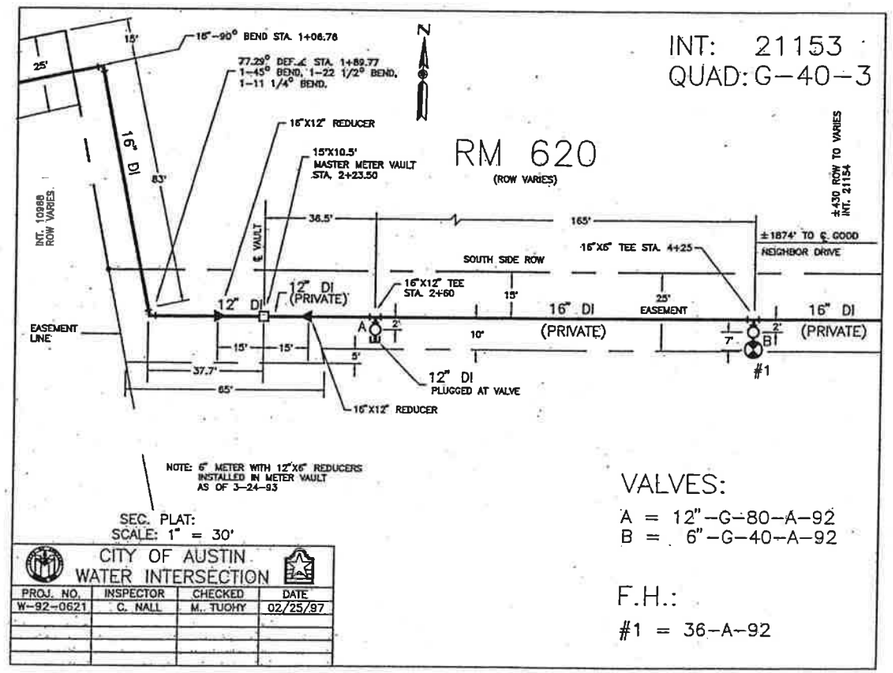

John W. Strybos

STATE OF TEXAS
JOHN W. STRYBOS
64259
LICENSED
PROFESSIONAL ENGINEER

3/19/2003

WATER DISTRIBUTION INTERSECTION DETAILS

SH 45 / US 183 INTERCHANGE

HNTB ARCHITECTS ENGINEERS PLANNERS
The HNTB Companies

Texas Department of Transportation
© 2003 TEXAS TURNPIKE AUTHORITY DIVISION

DRAWING PREPARED BY: HNTB CORPORATION			CITY OF AUSTIN SHEET NO.
SHEET 3 OF 8			A26
FED. RD. DIV. NO.	FEDERAL AID PROJECT NO.		SHEET NO.
6	MG 2002 (243)		747

DGN: CDA	STATE	DIST.	COUNTY
CHK DGN: JWS	TEXAS	14	WILLIAMSON
DWG:	CONT.	SECT.	JOB	HIGHWAY NO.
CHK DWG:	0683	01	069	SH 45

Pen Tables: \Jobs\32058\techprod\UTIL\plots\32058uh.pen
Design Filename: \\sanw00\pmwork\Jobs\32058\TECHPROD\UTIL\Dwg\phs1\45wdld03.dgn

Scale: 100.000000x1.000000
Plotted on: 18-MAR-2003 10:11

NOTE: REFER TO CITY OF AUSTIN "WATER DISTRIBUTION LAYOUT" SHEET A22.

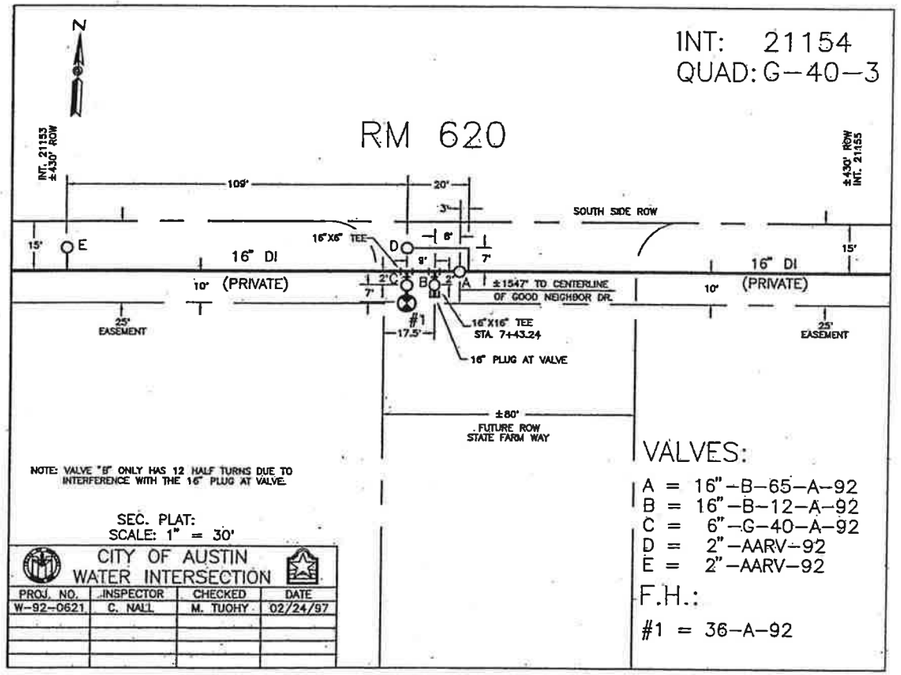

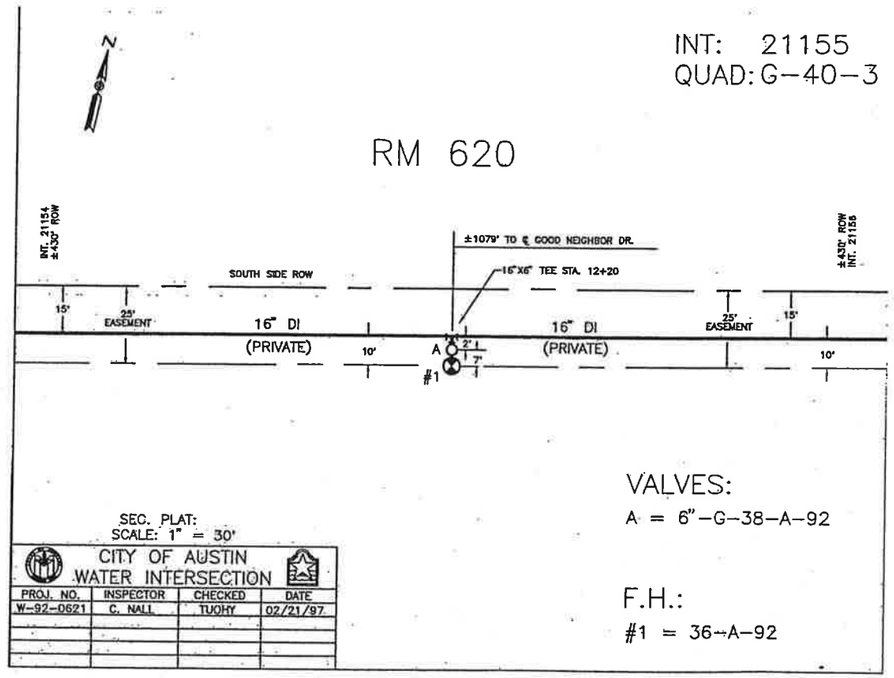

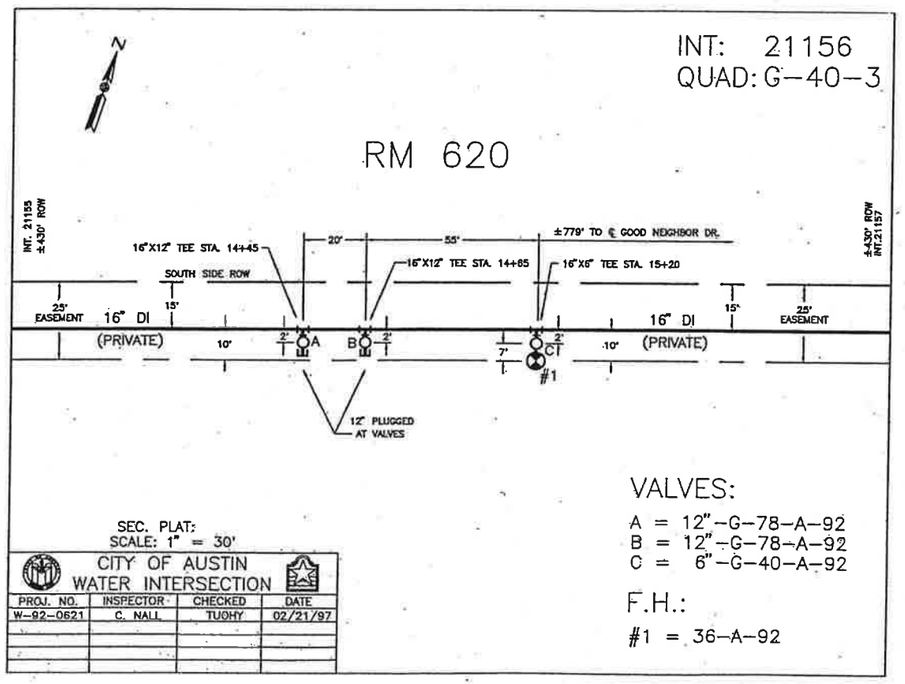

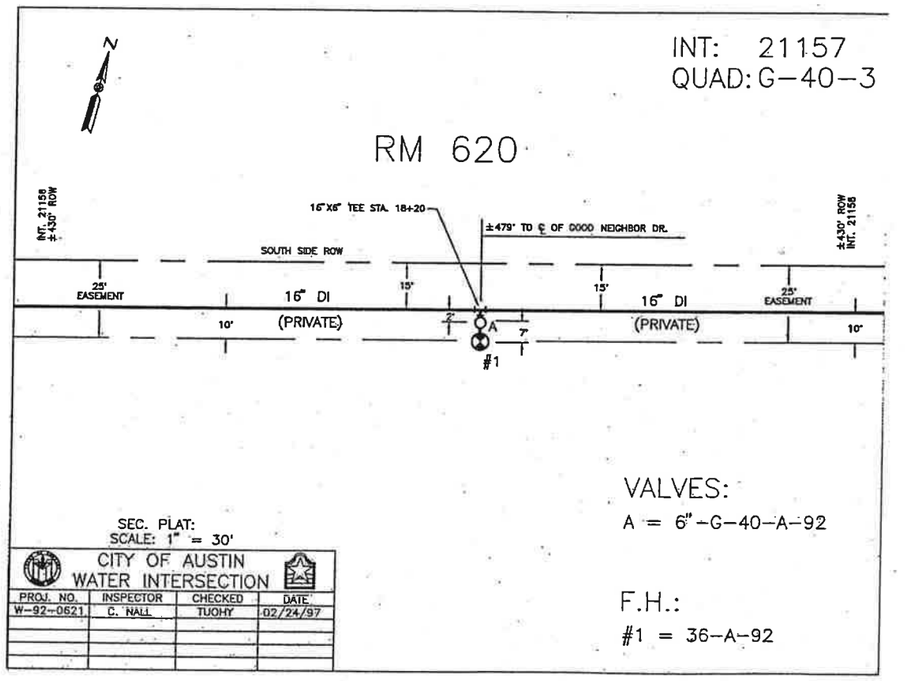

JOHN W. STRYBOS
64259
LICENSED PROFESSIONAL ENGINEER
STATE OF TEXAS
3/19/2003

WATER DISTRIBUTION INTERSECTION DETAILS

SH 45 / US 183 INTERCHANGE

HNTB ARCHITECTS ENGINEERS PLANNERS
The HNTB Companies

Texas Department of Transportation
© 2003 TEXAS TURNPIKE AUTHORITY DIVISION

DRAWING PREPARED BY: HNTB CORPORATION			CITY OF AUSTIN SHEET NO.
SHEET 4 OF 8			A27
FED. RD. DIV. NO.	FEDERAL AID PROJECT NO.		SHEET NO.
6	MG 2002 (243)		748

DGN: CDA	STATE	DIST.	COUNTY
CHK DGN: JWS	TEXAS	14	WILLIAMSON
DWG:	CONT.	SECT.	JOB / HIGHWAY NO.
CHK DWG:	0683	01	069 / SH 45

Pen Tables: \Jobs\32058\techprod\UTIL\plots\32058Uh.pen
Design Filename: \\sanw00\pmwork\Jobs\32058\TECHPROD\UTIL\Dwg\phs1\45wd1d04.dgn

Scale: 100.000000:1.000000
Plotted on: 18-MAR-2003 10:11

NOTE: REFER TO CITY OF AUSTIN "WATER DISTRIBUTION LAYOUT" SHEETS A21 AND A22.

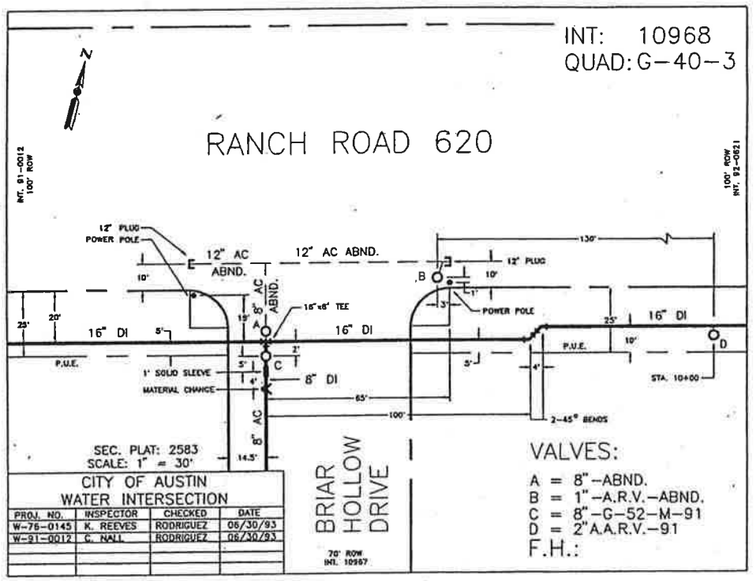

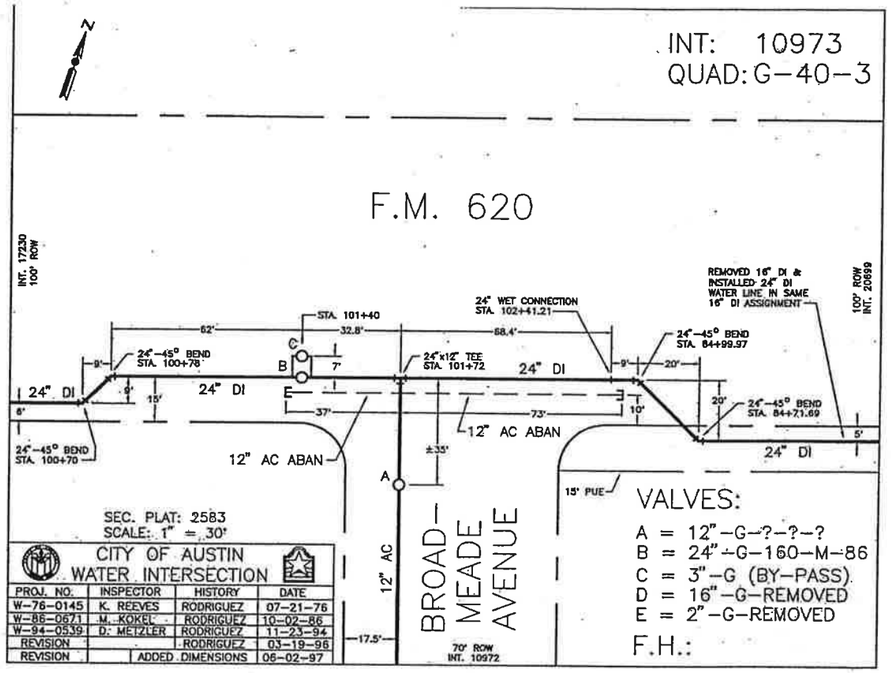

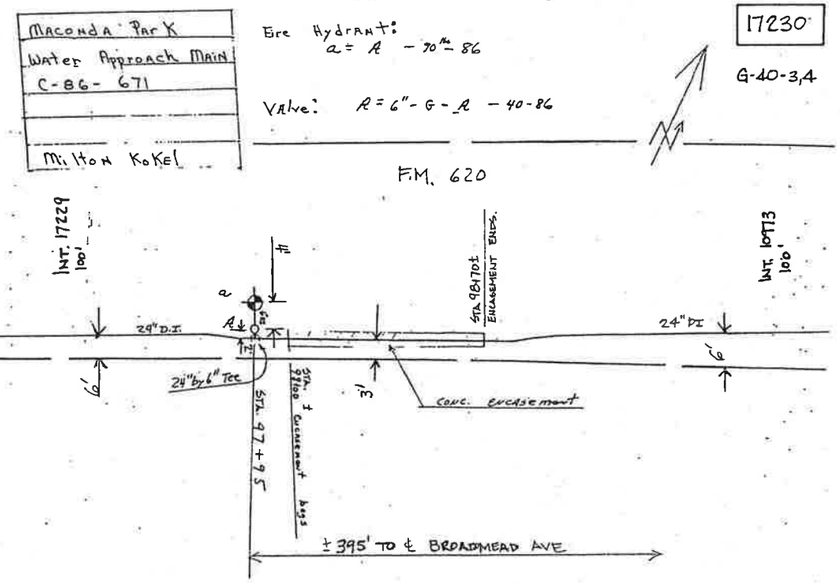

John W. Strybos
STATE OF TEXAS
JOHN W. STRYBOS
64259
LICENSED
PROFESSIONAL ENGINEER
3/19/2003

WATER DISTRIBUTION INTERSECTION DETAILS

SH 45 / US 183 INTERCHANGE

HNTB ARCHITECTS ENGINEERS PLANNERS
The HNTB Companies

Texas Department of Transportation
© 2003 TEXAS TURNPIKE AUTHORITY DIVISION

DRAWING PREPARED BY: HNTB CORPORATION				CITY OF AUSTIN SHEET NO.
SHEET 5 OF 8				A28
FED. RD. DIV. NO.	FEDERAL AID PROJECT NO.			SHEET NO.
6	MG 2002 (243)			749
DGN: CDA	STATE	DIST.	COUNTY	
CHK DGN: JWS	TEXAS	14	WILLIAMSON	
DWG:	CONT.	SECT.	JOB	HIGHWAY NO.
CHK DWG:	0683	01	069	SH 45

Pen Table: \Jobs\32058\techprod\UTIL\plots\32058Uh.pen
Design Filename: \\sanw00\pmwork\Jobs\32058\TECHPROD\Util\Dwg\phs1\45wd1d05.dgn

Scale: 100.000000:1.000000
Plotted on: 18-MAR-2003 10:11

NOTE: REFER TO CITY OF AUSTIN "WATER DISTRIBUTION LAYOUT" SHEET A23.

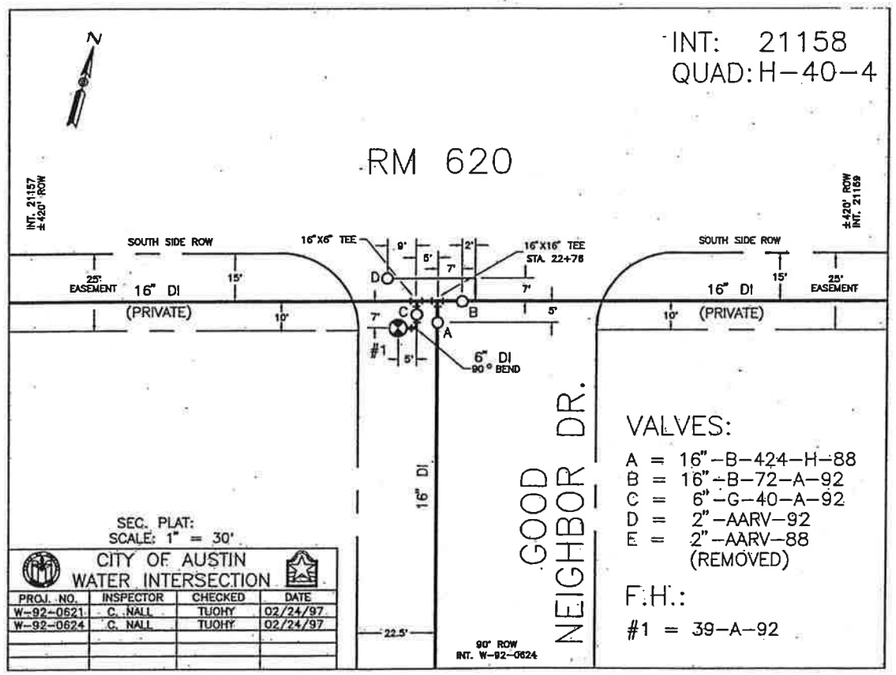

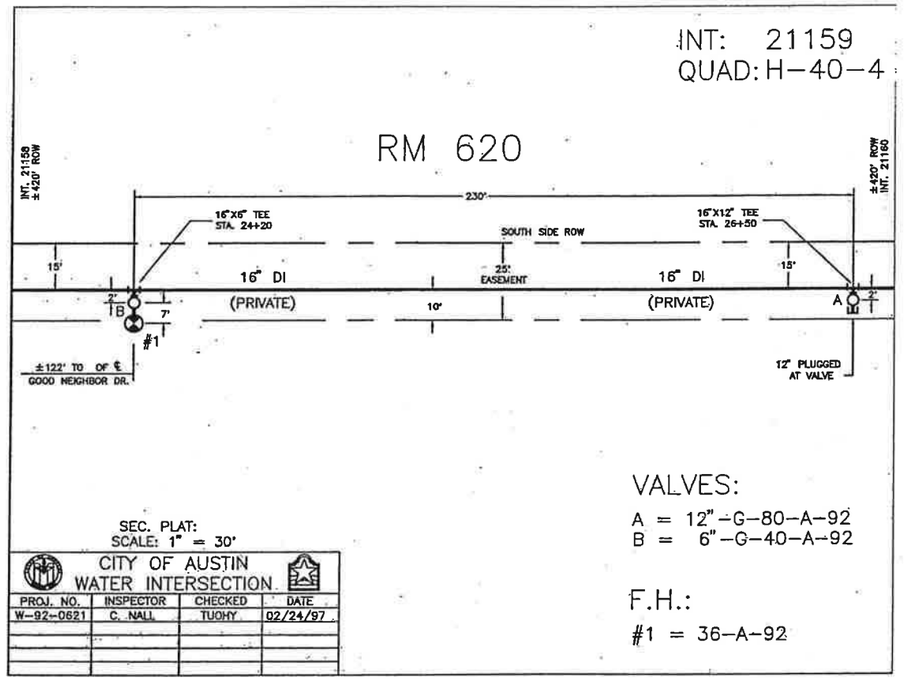

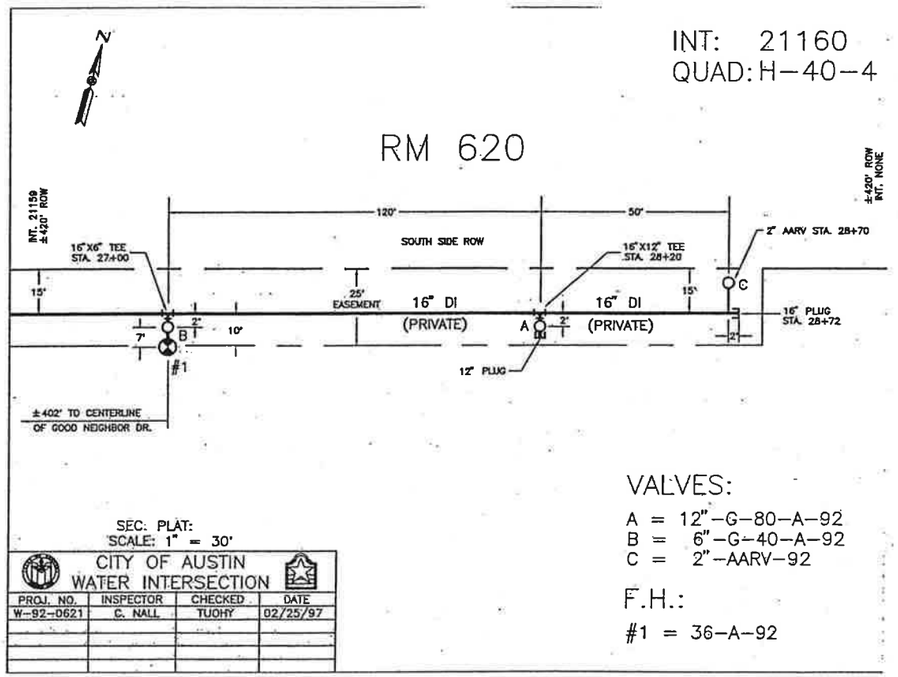

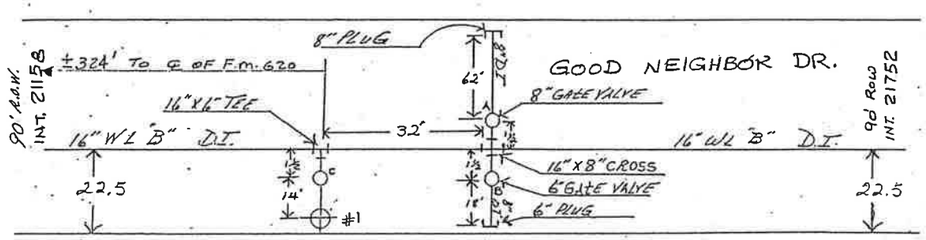

Lot 1
Block "E"
Project
Project No.--- Northwest Crossing PH. I
C-92-624 & C.I.B7-650
Inspector--- George Davis
Date --- 8-4-88

Lot 1
Block "D"

F.H.#1-150-A-88
VALVE:
A = 8"-G-54-AWWA-88
B = 8"-G-54-AWWA-88
C = 6"-G-41-AWWA-88

21751
N
H-40-4

STATE OF TEXAS
JOHN W. STRYBOS
64259
LICENSED PROFESSIONAL ENGINEER
3/19/2003

WATER DISTRIBUTION INTERSECTION DETAILS

SH 45 / US 183 INTERCHANGE

HNTB ARCHITECTS ENGINEERS PLANNERS
The HNTB Companies

Texas Department of Transportation
© 2003 TEXAS TURNPIKE AUTHORITY DIVISION

DRAWING PREPARED BY: HNTB CORPORATION			CITY OF AUSTIN SHEET NO.
SHEET 6 OF 8			A29
FED. RD. DIV. NO.	FEDERAL AID PROJECT NO.		SHEET NO.
6	MG 2002 (243)		750
DGN: CDA	STATE	DIST.	COUNTY
CHK DGN: JWS	TEXAS	14	WILLIAMSON
DWG:	CONT.	SECT.	JOB / HIGHWAY NO.
CHK DWG:	0683	01	069 / SH 45

Pen Tables: I:\Jobs\32058\techprod\UTIL\plots\32058uh.pen
Design Filename: \\sanw00\pmwork\Jobs\32058\TECHPROD\Util\Dwg\phe1\45wd1d06.dgn

Scale: 100.000000:1.000000
Plotted on: 18-MAR-2003 10:12

NOTE: REFER TO CITY OF AUSTIN "WATER DISTRIBUTION LAYOUT" SHEET A23.

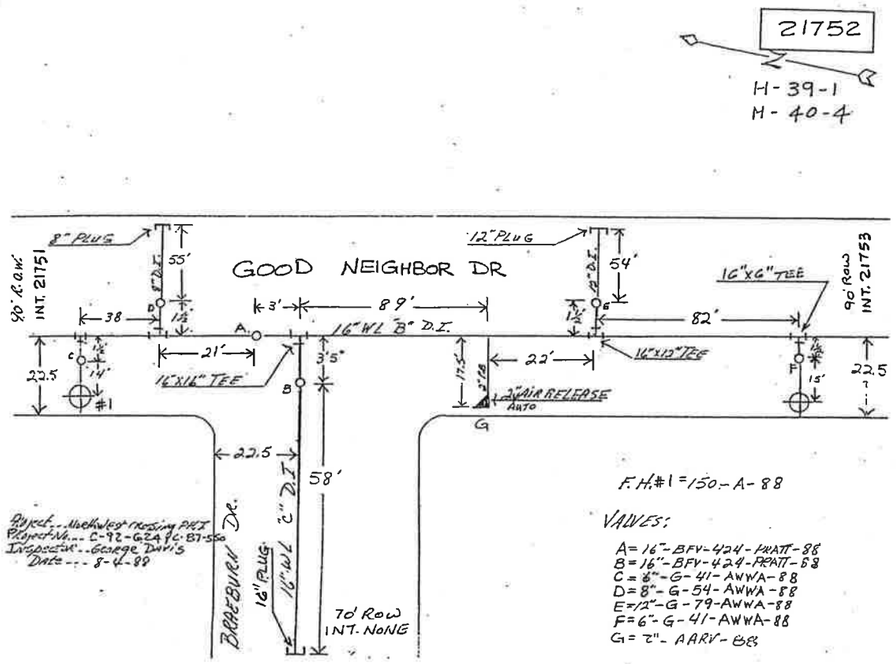

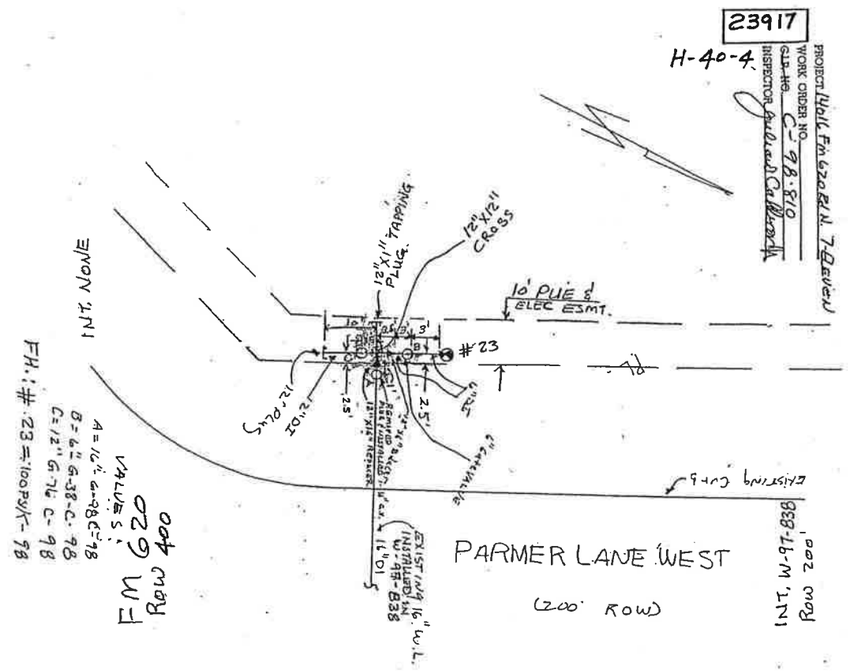

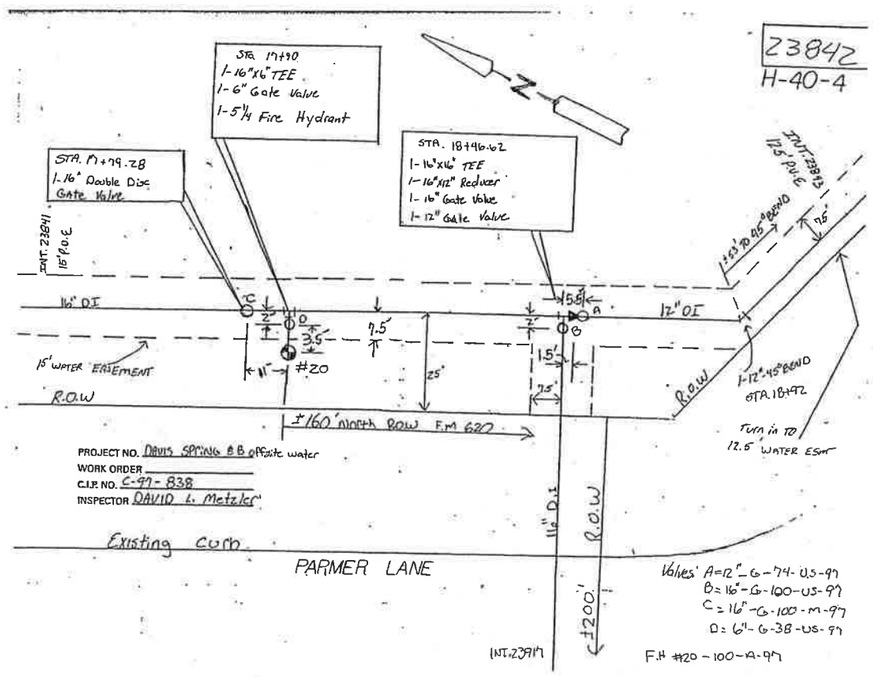

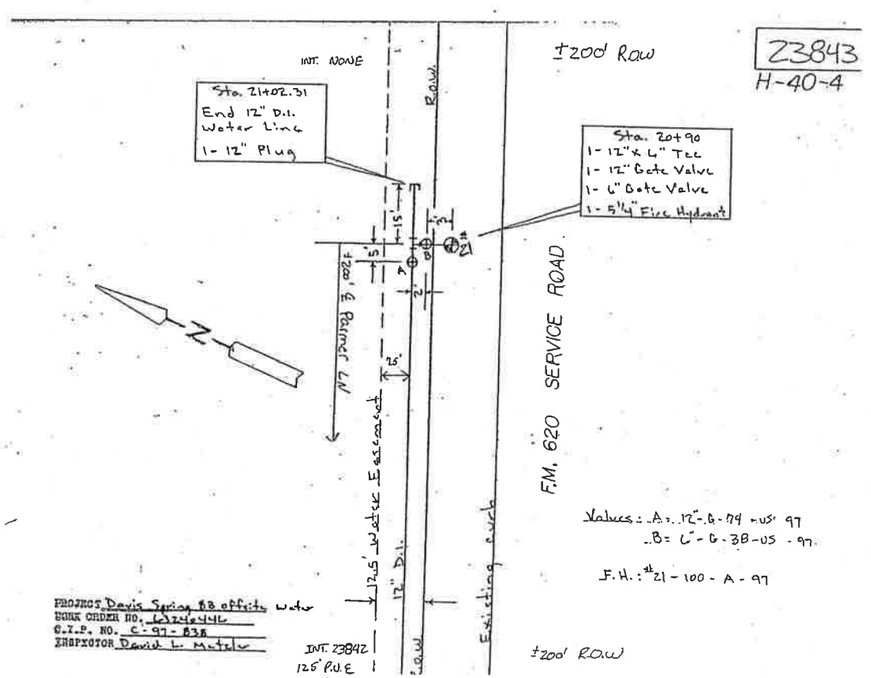

John W. Strybos
STATE OF TEXAS
JOHN W. STRYBOS
64259
LICENSED PROFESSIONAL ENGINEER
3/19/2003

WATER DISTRIBUTION INTERSECTION DETAILS

SH 45 / US 183 INTERCHANGE

HNTB ARCHITECTS ENGINEERS PLANNERS
The HNTB Companies

Texas Department of Transportation
© 2003 TEXAS TURNPIKE AUTHORITY DIVISION

DRAWING PREPARED BY: HNTB CORPORATION			CITY OF AUSTIN SHEET NO.
SHEET 7 OF 8			A30
FED. RD. DIV. NO.	FEDERAL AID PROJECT NO.		SHEET NO.
6	MG 2002 (243)		751
DGN: CDA	STATE	DIST.	COUNTY
CHK DGN: JWS	TEXAS	14	WILLIAMSON
DWG:	CONT.	SECT.	JOB	HIGHWAY NO.
CHK DWG:	0683	01	069	SH 45

Pen Tables: \\Jobs\32058\techprod\UTIL\plots\32058Uh.pen
Design Filename: \\sanw00\pmwork\Jobs\32058\TECHPROD\Util\Dwg\phs1\45wdld07.dgn

Scale: 100.000000:1.000000
Plotted on: 18-MAR-2003 10:12
Pen Table: \Jobs\32058\techprod\UTIL\plots\32058Uh.pen
Design Filename: \\eanw00\pmwork\Jobs\32058\TECHPROD\Util\Dwg\phe1\45wdld08.dgn

NOTE: REFER TO CITY OF AUSTIN "WATER DISTRIBUTION LAYOUT" SHEET A19.

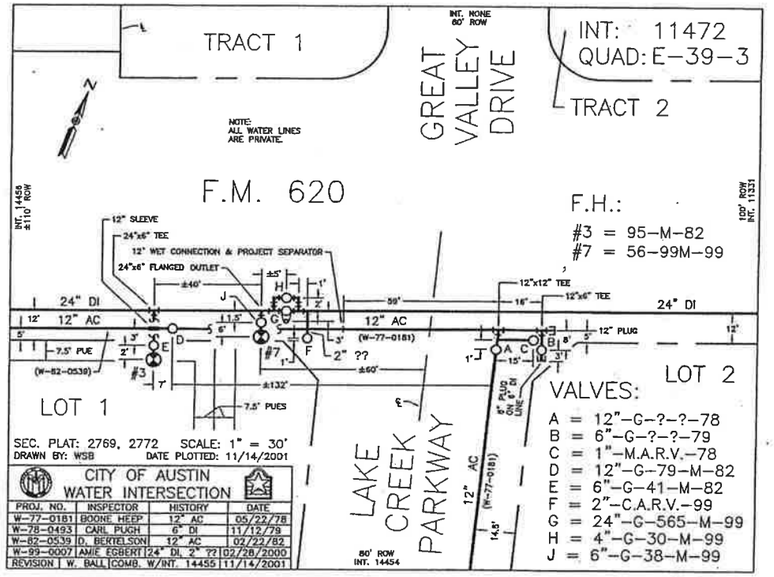

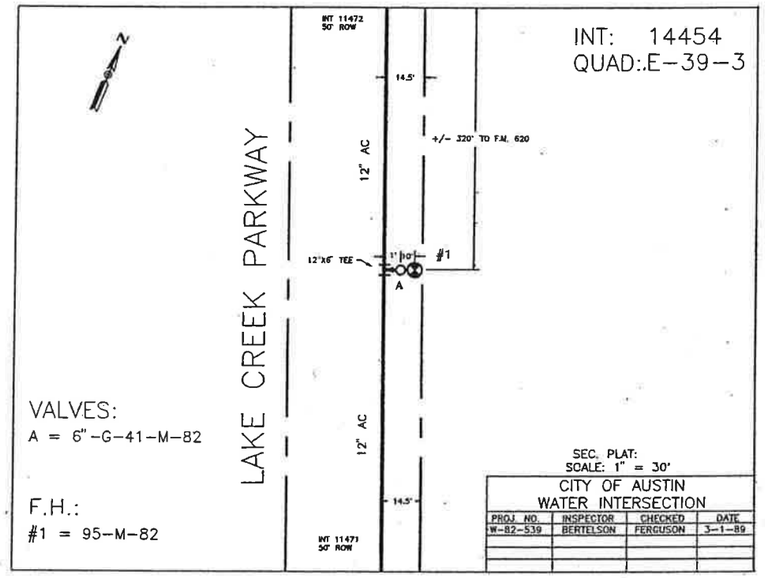



3/19/2003

WATER DISTRIBUTION INTERSECTION DETAILS

SH 45 / US 183 INTERCHANGE

HNTB ARCHITECTS ENGINEERS PLANNERS
The HNTB Companies

Texas Department of Transportation

© 2003 TEXAS TURNPIKE AUTHORITY DIVISION

DRAWING PREPARED BY: HNTB CORPORATION			CITY OF AUSTIN SHEET NO.
SHEET 8 OF 8			A31
FED. RD. DIV. NO.	FEDERAL AID PROJECT NO.		SHEET NO.
6	MG 2002 (243)		752
DGN: CDA	STATE	DIST.	COUNTY
CHK: JWS	TEXAS	14	WILLIAMSON
DWN:	CONT.	SECT.	JOB	HIGHWAY NO.
CHK:	0683	01	069	SH 45

Scale: 100.000000:1.000000
Plotted on: 18-MAR-2003 10:12

Pen Table: I:\ \32058\TECHPROD\Util\Plots\32058Uh.pen
Design Filena: I:\Jobs\32058\TECHPROD\UTIL\Dwg\PHS1\45wo1.dgn

CITY OF AUSTIN –WASTEWATER COLLECTION SYSTEM



NOTE: THIS MAP IS PRODUCED FOR THE NEEDS OF THE CITY AND NO WARRANTY IS MADE AS TO ITS ACCURACY OR QUALITY.

1:1200 scale maps are available for this grid

Scale 1:2400
0 100 200 400 600 800 FEET

NO WORK ON THIS SHEET
FOR INFORMATION ONLY

John W. Strybos

STATE OF TEXAS
JOHN W. STRYBOS
64259
LICENSED
PROFESSIONAL ENGINEER
3/19/2003

WASTEWATER COLLECTION LAYOUT

SH 45 / US 183 INTERCHANGE

HNTB ARCHITECTS ENGINEERS PLANNERS
The HNTB Companies

Texas Department of Transportation
© 2003 TEXAS TURNPIKE AUTHORITY DIVISION

DRAWING PREPARED BY: HNTB CORPORATION				CITY OF AUSTIN SHEET NO.
SHEET 1 OF 6				A-32
FED. RD. DIV. NO.	FEDERAL AID PROJECT NO.			SHEET NO.
6	MG 2002 (243)			753
DGN: CDA	STATE	DIST.	COUNTY	
CHK DGN: JWS	TEXAS	14	WILLIAMSON	
DWG:	CONT.	SECT.	JOB	HIGHWAY NO.
CHK DWG:	0683	01	069	SH 45

Scale: 100.000000:1.000000
Plotted on: 18-MAR-2003 10:12

Pen Tables: e:\32058\TECHPROD\UTIL\Plots\32058Un.pen
Design Files: I:\Jobs\32058\TECHPROD\UTIL\Dwg\PHS\45wo2.dgn

CITY OF AUSTIN –WASTEWATER COLLECTION SYSTEM



NO WORK ON THIS SHEET
FOR INFORMATION ONLY

John W. Strybos
STATE OF TEXAS
JOHN W. STRYBOS
64259
LICENSED
PROFESSIONAL ENGINEER
3/19/2003

WASTEWATER COLLECTION LAYOUT

SH 45 / US 183 INTERCHANGE

HNTB ARCHITECTS ENGINEERS PLANNERS
The HNTB Companies

Texas Department of Transportation
© 2003 TEXAS TURNPIKE AUTHORITY DIVISION

DRAWING PREPARED BY: HNTB CORPORATION				CITY OF AUSTIN SHEET NO.
SHEET 2 OF 6				A-33
FED. RD. DIV. NO.	FEDERAL AID PROJECT NO.			SHEET NO.
6	MG 2002 (243)			754
DGN: CDA	STATE	DIST.	COUNTY	
CHK DGN: JWS	TEXAS	14	WILLIAMSON	
DWN:	CONT.	SECT.	JOB	HIGHWAY NO.
CHK DWG:	0683	01	069	SH 45

Scale: 100.0000001:1.000000
Plotted on: 18-MAR-2003 11:47

Pen Table: I:\Jobs\32058\techprod\UTIL\plots\32058Uh.pen
Design Filename: I:\Jobs\32058\TECHPROD\UTIL\Dwg\phs1\45wo3.dgn

CITY OF AUSTIN –WASTEWATER COLLECTION SYSTEM

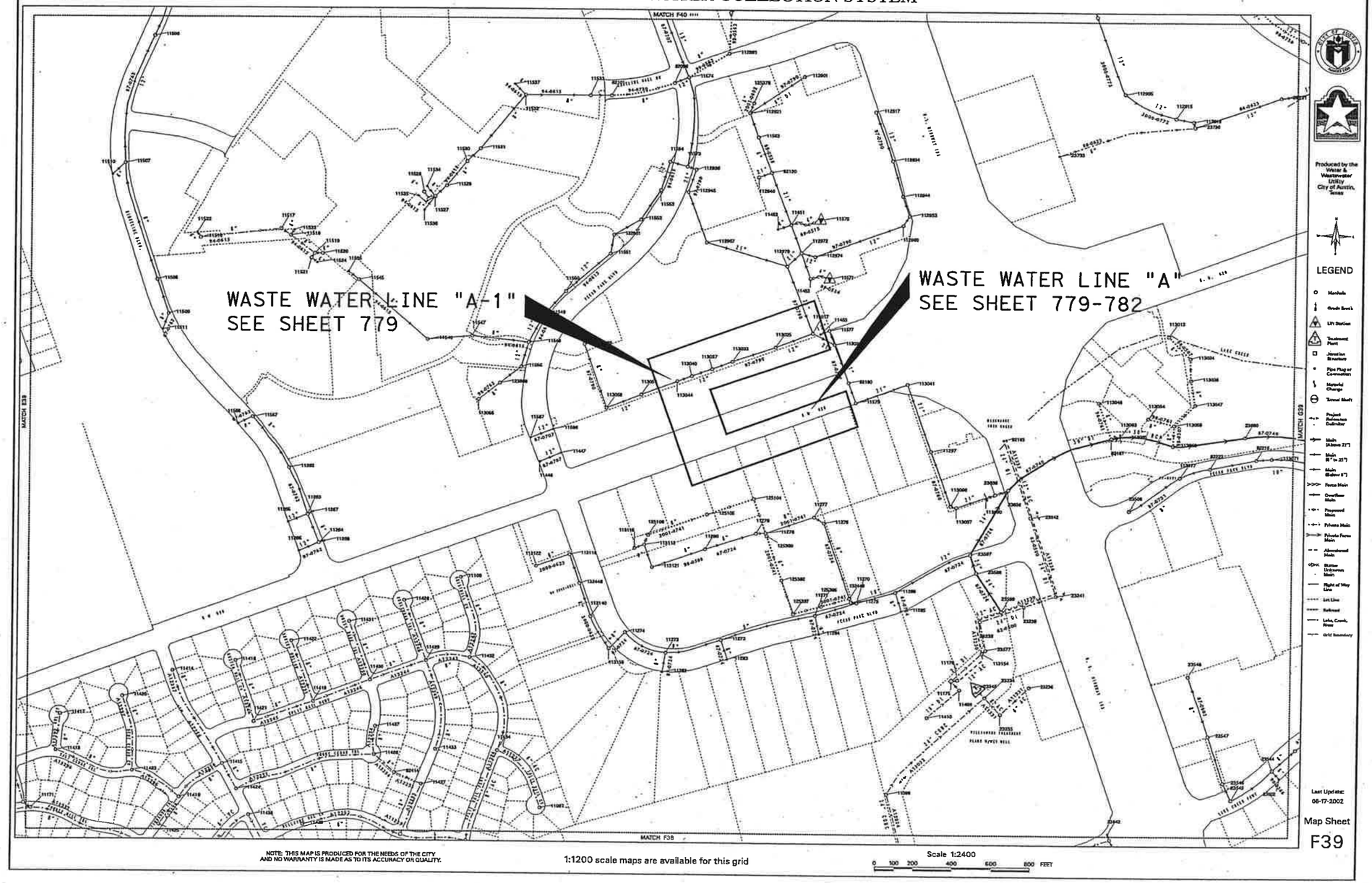

Produced by the Water & Wastewater Utility City of Austin, Texas

LEGEND

Last Update: 08-17-2002

Map Sheet F39

NOTE: THIS MAP IS PRODUCED FOR THE NEEDS OF THE CITY AND NO WARRANTY IS MADE AS TO ITS ACCURACY OR QUALITY.

1:1200 scale maps are available for this grid

Scale 1:2400

0 100 200 400 600 800 FEET

STATE OF TEXAS
LORI DULLNIG-WARLEN
63520
LICENSED
PROFESSIONAL ENGINEER
3/19/2003

WASTEWATER COLLECTION LAYOUT

HNTB ARCHITECTS ENGINEERS PLANNERS
The HNTB Companies

Texas Department of Transportation
© 2003 TEXAS TURNPIKE AUTHORITY DIVISION

DRAWING PREPARED BY:	JOBSTB.CORRECTIONC.			
SHEET 3 OF 6				A-34
FED. RD. DIV. NO.	FEDERAL AID PROJECT NO.			SHEET NO.
6	MG 2002 (243)			755
DGN: CDA	STATE	DIST.	COUNTY	
CHK DGN: JWS	TEXAS	14	WILLIAMSON	
DWG:	CONT.	SECT.	JOB	HIGHWAY NO.
CHK DWG:	0683	01	069	SH 45

Scale: 100.000000:1.000000
Plotted on: 18-MAR-2003 10:12

Pen Table: \\ 32058\TECHPROD\UTIL\Plots\32058Uh.pen
Design Filename: J:\Jobs\32058\TECHPROD\UTIL\Dwg\PHS1\45wo4.dgn

CITY OF AUSTIN –WASTEWATER COLLECTION SYSTEM



NOTE: THIS MAP IS PRODUCED FOR THE NEEDS OF THE CITY AND NO WARRANTY IS MADE AS TO ITS ACCURACY OR QUALITY.

1:1200 scale maps are available for this grid

Scale 1:2400
0 100 200 400 600 800 FEET

NO WORK ON THIS SHEET
FOR INFORMATION ONLY

STATE OF TEXAS
JOHN W. STRYBOS
64259
LICENSED
PROFESSIONAL ENGINEER
3/19/2003

WASTEWATER COLLECTION LAYOUT

SH 45 / US 183 INTERCHANGE

HNTB ARCHITECTS ENGINEERS PLANNERS
The HNTB Companies

Texas Department of Transportation
© 2003 TEXAS TURNPIKE AUTHORITY DIVISION

DRAWING PREPARED BY: HNTB CORPORATION				CITY OF AUSTIN SHEET NO.
SHEET 4 OF 6				A-35
FED. RD. DIV. NO.	FEDERAL AID PROJECT NO.			SHEET NO.
6	MG 2002 (243)			756
DGN: CDA	STATE	DIST.	COUNTY	
CHK. JWS DGN:	TEXAS	14	WILLIAMSON	
DWG:	CONT.	SECT.	JOB	HIGHWAY NO.
CHK DWG:	0683	01	069	SH 45

Scale: 100.000000:1.000000
Plotted on: 18-MAR-2003 11:43

Pen Tables: \32058\TECHPROD\UTIL\Plots\32058Uh.pen
Design Filenam...: I:\Jobs\32058\TECHPROD\UTIL\Dwg\PHS1\45wc5.dgn

CITY OF AUSTIN –WASTEWATER COLLECTION SYSTEM



NO WORK ON THIS SHEET
FOR INFORMATION ONLY

John W. Strybos
STATE OF TEXAS
JOHN W. STRYBOS
64259
LICENSED
PROFESSIONAL ENGINEER
3/19/2003

WASTEWATER COLLECTION LAYOUT

SH 45 / US 183 INTERCHANGE

HNTB ARCHITECTS ENGINEERS PLANNERS
The HNTB Companies

Texas Department of Transportation
© 2003 TEXAS TURNPIKE AUTHORITY DIVISION

DRAWING PREPARED BY: HNTB CORPORATION				CITY OF AUSTIN SHEET NO.
SHEET 5 OF 6				A-36
FED. RD. DIV. NO.	FEDERAL AID PROJECT NO.			SHEET NO.
6	MG 2002 (243)			757
DGN: CDA	STATE	DIST.	COUNTY	
CHK DGN: JWS	TEXAS	14	WILLIAMSON	
DWG:	CONT.	SECT.	JOB	HIGHWAY NO.
CHK DWG:	0683	01	069	SH 45

Scale: 100.000000:1.000000
Plotted on: 18-MAR-2003 11:41

Pen Tables: V:\3205B\TECHPROD\UTIL\Plots\32058uh.pen
Design Filena...: V:\Jobs\32058\TECHPROD\UTIL\Dwg\PHS1\45wo6.dgn

CITY OF AUSTIN –WASTEWATER COLLECTION SYSTEM

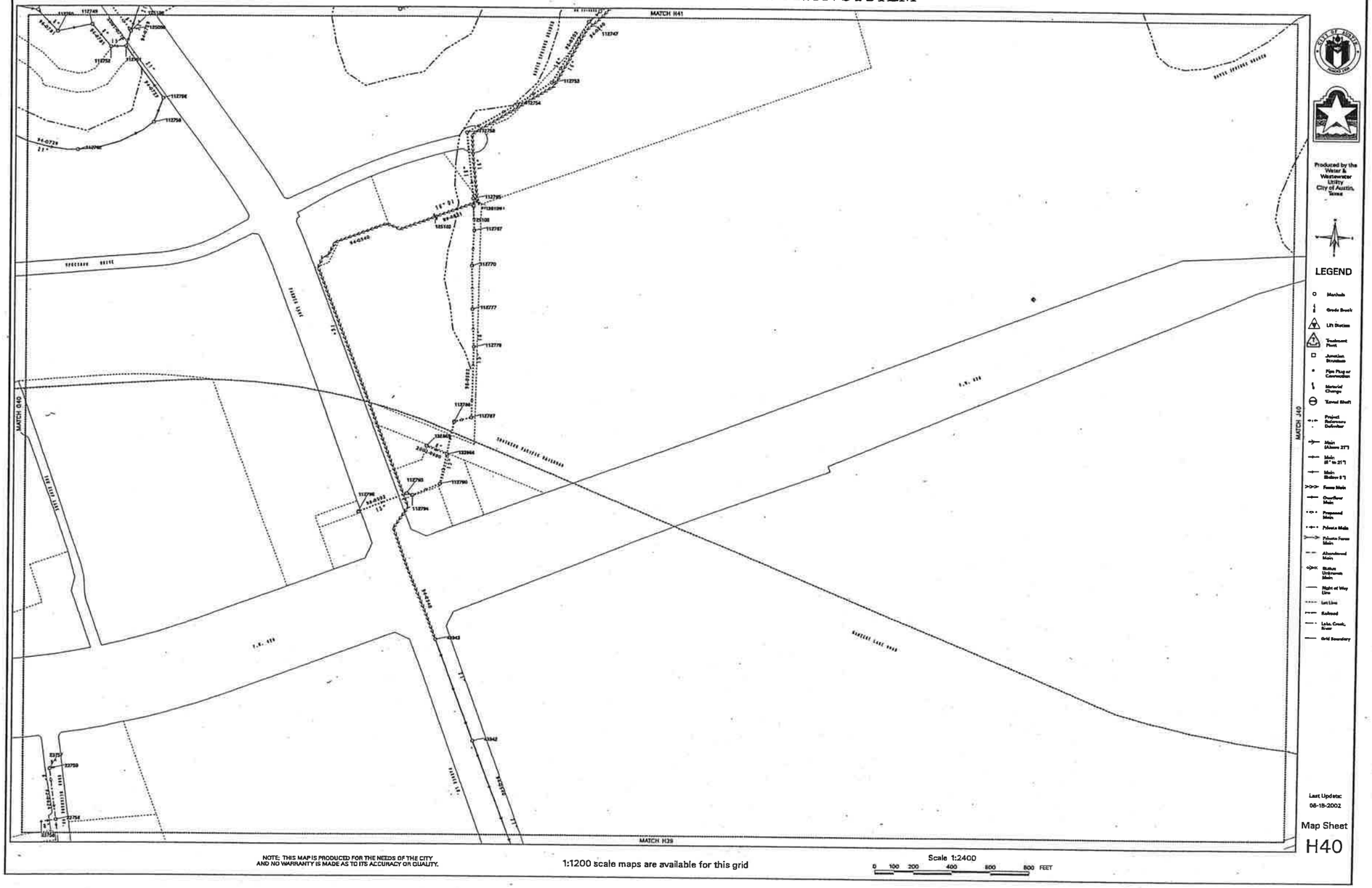

NO WORK ON THIS SHEET
FOR INFORMATION ONLY

STATE OF TEXAS
JOHN W. STRYBOS
64259
LICENSED
PROFESSIONAL ENGINEER
3/19/2003

WASTEWATER COLLECTION LAYOUT

SH 45 / US 183 INTERCHANGE

HNTB ARCHITECTS ENGINEERS PLANNERS
The HNTB Companies

Texas Department of Transportation
© 2003 TEXAS TURNPIKE AUTHORITY DIVISION

DRAWING PREPARED BY: HNTB CORPORATION				CITY OF AUSTIN SHEET NO.
SHEET 6 OF 6				A-37
FED. RD. DIV. NO.	FEDERAL AID PROJECT NO.			SHEET NO.
6	MG 2002 (243)			758
DGN: CDA	STATE	DIST.	COUNTY	
CHK. DGN: JWS	TEXAS	14	WILLIAMSON	
DWG:	CONT.	SECT.	JOB	HIGHWAY NO.
CHK. DWG:	0683	01	069	SH 45

Scale: 400.0000001:1.000000
Plotted on: 18-MAR-2003 10:13

Pen Table: I:\Jobs\32058\TECHPROD\UTIL\Plots\32058Uh.pen
Design Filename: I:\Jobs\32058\TECHPROD\UTIL\Dwg\PHS1\45wep0801.dgn



LEGEND

—SF——SF— SEDIMENT CONTROL FENCE

—LOC——LOC— LIMITS OF CONSTRUCTION

ROCK FILTER DAM

NOTES:

1. THE LIMITS OF CONSTRUCTION (LOC) IS THE PROPOSED RIGHT-OF-WAY FOR SH45/US183 IMPROVEMENTS. SILT FENCING SHALL BE INSTALLED AT LOC OR PROPOSED UTILITY EASEMENTS

2. CONTRACTOR STAGING AREA AND ANY ADJACENT AREAS WHERE VEGETATION IS DISTRURBED DURING CONSTRUCTION SHALL BE RESTORED TO ORIGINAL CONDITIONS UPON COMPLETION OF WORK.

3. CONSTRUCTION EXITS SHALL BE FIELD LOCATED AS DIRECTED BY THE ENGINEER.

STATE OF TEXAS
JOHN W. STRYBOS
64259
LICENSED
PROFESSIONAL ENGINEER
3/19/2003

EROSION & SEDIMENTION CONTROL PLAN

STA 85+00 TO STA 133+00

SH 45 / US 183 INTERCHANGE

SCALE: PLAN 1": 400'

HNTB ARCHITECTS ENGINEERS PLANNERS
The HNTB Companies

Texas Department of Transportation
© 2003 TEXAS TURNPIKE AUTHORITY DIVISION

DRAWING PREPARED BY: HNTB CORPORATION			CITY OF AUSTIN SHEET NO.
SHEET 1 OF 4			A-38
FED. RD. DIV. NO.	FEDERAL AID PROJECT NO.		SHEET NO.
6	MG 2002 (243)		759
DGN: JEG	STATE	DIST.	COUNTY
CHK. DGN: JWS	TEXAS	14	WILLIAMSON
DWN: JEG	CONT.	SECT.	JOB / HIGHWAY NO.
CHK. DWG: JWS	0683	01	069 / SH 45

Scale: 400.0000001:1.000000
Plotted on: 18-MAR-2003 10:13

Pen Table: I:\Jobs\32058\TECHPROD\Util\Plots\32058Un.pen
Design Filename: I:\Jobs\32058\TECHPROD\UTIL\Dwg\PHS1\45wep0802.dgn

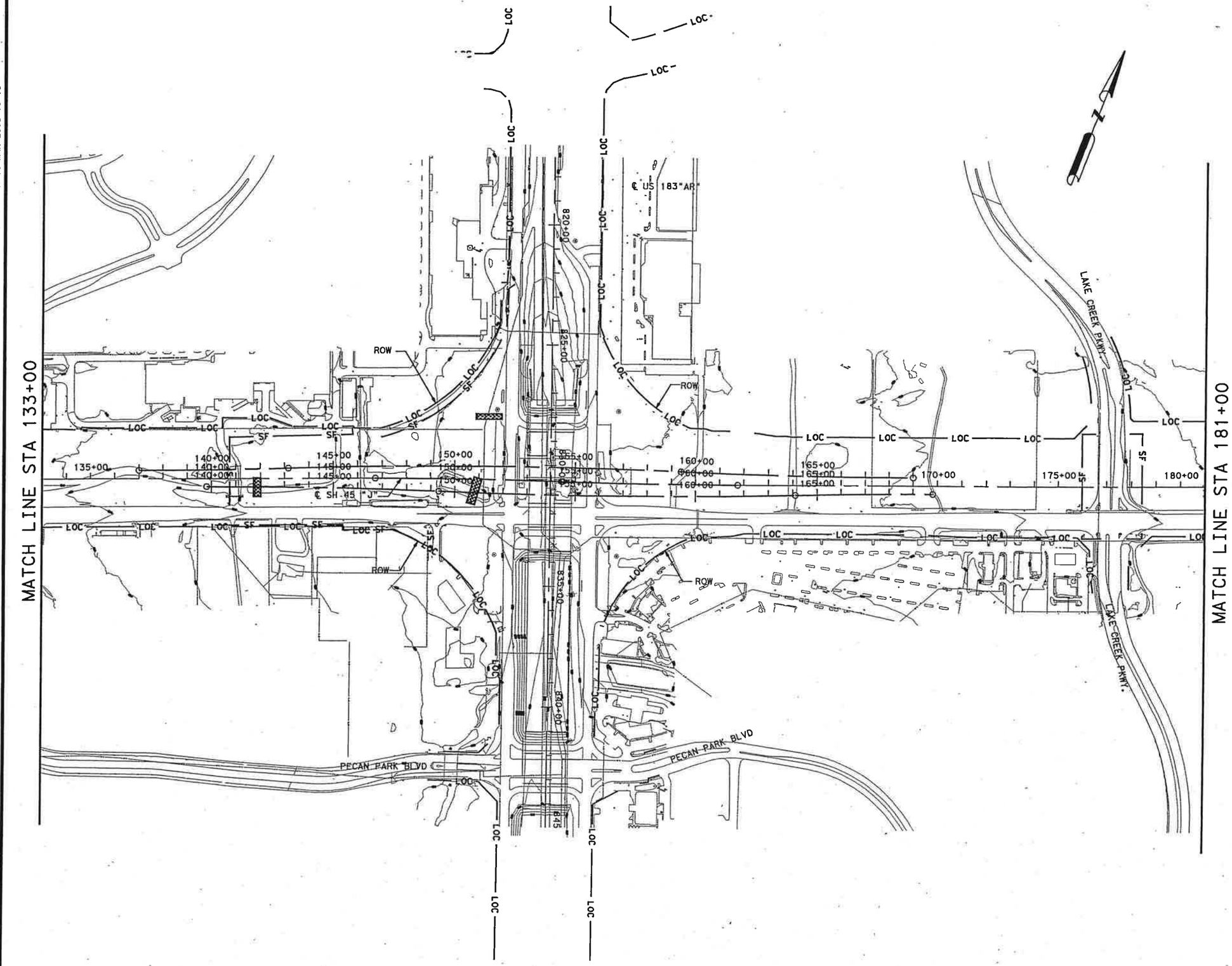

LEGEND

—SF——SF—	SEDIMENT CONTROL FENCE
—LOC——LOC—	LIMITS OF CONSTRUCTION
	ROCK FILTER DAM

NOTES:

1. THE LIMITS OF CONSTRUCTION (LOC) IS THE PROPOSED RIGHT-OF-WAY FOR SH45/US183 IMPROVEMENTS. SILT FENCING SHALL BE INSTALLED AT LOC OR PROPOSED UTILITY EASEMENTS

2. CONTRACTOR STAGING AREA AND ANY ADJACENT AREAS WHERE VEGETATION IS DISTRURBED DURING CONSTRUCTION SHALL BE RESTORED TO ORIGINAL CONDITIONS UPON COMPLETION OF WORK.

3. CONSTRUCTION EXITS SHALL BE FIELD LOCATED AS DIRECTED BY THE ENGINEER.

STATE OF TEXAS
JOHN W. STRYBOS
64259
LICENSED
PROFESSIONAL ENGINEER
3/19/2003

EROSION & SEDIMENTION CONTROL PLAN

STA 133+00 TO STA 181+00

SH 45 / US 183 INTERCHANGE

SCALE: PLAN 1": 400'

HNTB ARCHITECTS ENGINEERS PLANNERS
The HNTB Companies

Texas Department of Transportation
© 2003 TEXAS TURNPIKE AUTHORITY DIVISION

DRAWING PREPARED BY: HNTB CORPORATION				CITY OF AUSTIN SHEET NO.
SHEET 2 OF 4				A-39
FED. RD. DIV. NO.	FEDERAL AID PROJECT NO.			SHEET NO.
6	MG 2002 (243)			760
DGN: JEG	STATE	DIST.	COUNTY	
CHK. DGN: JWS	TEXAS	14	WILLIAMSON	
DWG: JEG	CONT.	SECT.	JOB	HIGHWAY NO.
CHK DWG: JWS	0683	01	069	SH 45

Scale: 400.000000:1.000000
Plotted on: 18-MAR-2003 10:13

Pen Table: I:\Jobs\32058\TECHPROD\UTIL\Plots\32058Un.pen
Design Filename: I:\Jobs\32058\TECHPROD\UTIL\Dwg\PHSI\45wep0803.dgn

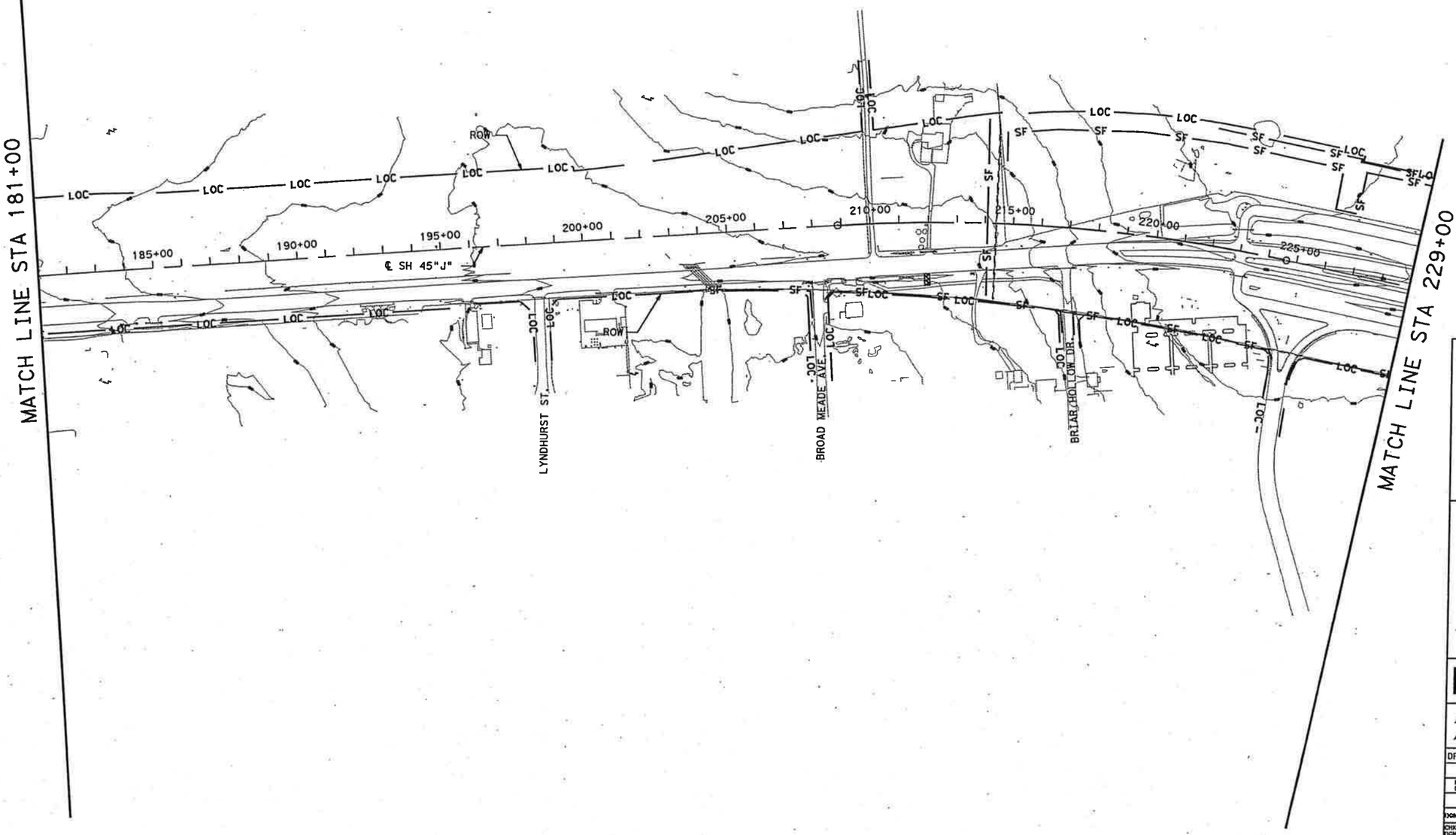

LEGEND

—SF—SF— SEDIMENT CONTROL FENCE

—LOC—LOC— LIMITS OF CONSTRUCTION

ROCK FILTER DAM

NOTES:

1. THE LIMITS OF CONSTRUCTION (LOC) IS THE PROPOSED RIGHT-OF-WAY FOR SH45/US183 IMPROVEMENTS. SILT FENCING SHALL BE INSTALLED AT LOC OR PROPOSED UTILITY EASEMENTS

2. CONTRACTOR STAGING AREA AND ANY ADJACENT AREAS WHERE VEGETATION IS DISTRURBED DURING CONSTRUCTION SHALL BE RESTORED TO ORIGINAL CONDITIONS UPON COMPLETION OF WORK.

3. CONSTRUCTION EXITS SHALL BE FIELD LOCATED AS DIRECTED BY THE ENGINEER.

STATE OF TEXAS
JOHN W. STRYBOS
64259
LICENSED
PROFESSIONAL ENGINEER
3/19/2003

EROSION & SEDIMENTION CONTROL PLAN

STA 181+00 TO STA 229+00

SH 45 / US 183 INTERCHANGE

SCALE: PLAN 1": 400'

HNTB ARCHITECTS ENGINEERS PLANNERS
The HNTB Companies

Texas Department of Transportation
© 2003 TEXAS TURNPIKE AUTHORITY DIVISION

DRAWING PREPARED BY: HNTB CORPORATION			CITY OF AUSTIN SHEET NO.
SHEET 3 OF 4			A-40
FED. RD. DIV. NO.	FEDERAL AID PROJECT NO.		SHEET NO.
6	MG 2002 (243)		761
DGN: JEG	STATE	DIST.	COUNTY
CHK DGN: JWS	TEXAS	14	WILLIAMSON
DWG: JEG	CONT.	SECT.	JOB / HIGHWAY NO.
CHK DWG: JWS	0683	01	069 / SH 45

Scale: 400.000000:1.000000
Plotted on: 18-MAR-2003 10:14

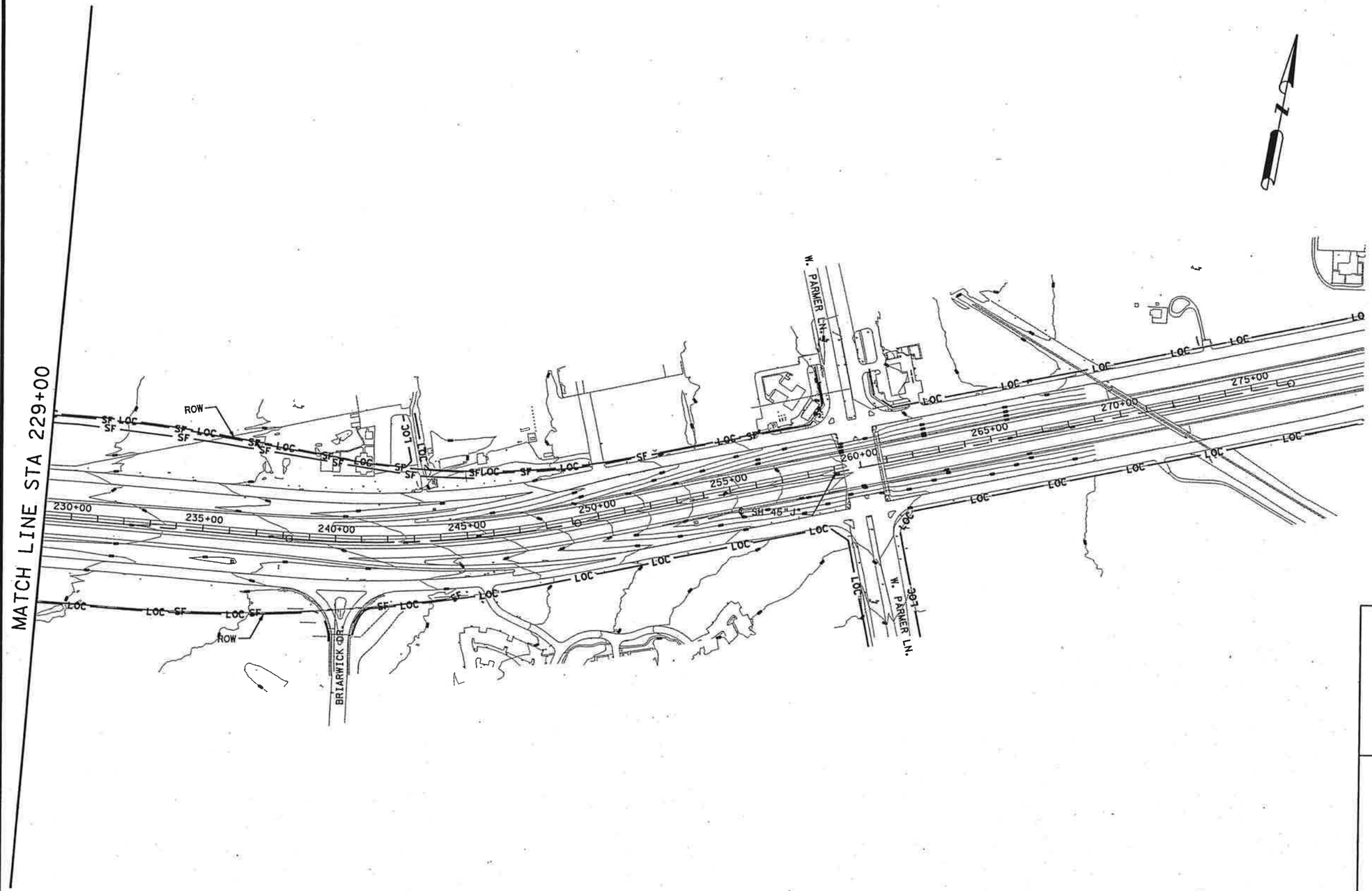

LEGEND

—SF——SF—	SEDIMENT CONTROL FENCE
—LOC——LOC—	LIMITS OF CONSTRUCTION
	ROCK FILTER DAM

NOTES:

1. THE LIMITS OF CONSTRUCTION (LOC) IS THE PROPOSED RIGHT-OF-WAY FOR SH45/US183 IMPROVEMENTS. SILT FENCING SHALL BE INSTALLED AT LOC OR PROPOSED UTILITY EASEMENTS

2. CONTRACTOR STAGING AREA AND ANY ADJACENT AREAS WHERE VEGETATION IS DISTRURBED DURING CONSTRUCTION SHALL BE RESTORED TO ORIGINAL CONDITIONS UPON COMPLETION OF WORK.

3. CONSTRUCTION EXITS SHALL BE FIELD LOCATED AS DIRECTED BY THE ENGINEER.

STATE OF TEXAS
JOHN W. STRYBOS
64259
LICENSED
PROFESSIONAL ENGINEER
3/19/2003

EROSION & SEDIMENTION CONTROL PLAN

STA 229+00 TO STA 254+50.00

SH 45 / US 183 INTERCHANGE

SCALE: PLAN 1": 400'

HNTB ARCHITECTS ENGINEERS PLANNERS
The HNTB Companies

Texas Department of Transportation
© 2003 TEXAS TURNPIKE AUTHORITY DIVISION

DRAWING PREPARED BY: HNTB CORPORATION				CITY OF AUSTIN SHEET NO.
SHEET 4 OF 4				A-41
FED. RD. DIV. NO.	FEDERAL AID PROJECT NO.			SHEET NO.
6	MG 2002 (243)			762
DGN: JEG	STATE	DIST.	COUNTY	
CHK DGN: JWS	TEXAS	14	WILLIAMSON	
DWN: JEG	CONT.	SECT.	JOB	HIGHWAY NO.
CHK DWG: JWS	0683	01	069	SH 45

Pen Table: I:\Jobs\32058\TECHPROD\UTIL\Plots\32058Uh.pen
Design Filename: I:\Jobs\32058\TECHPROD\UTIL\Dwg\PHS1\45wep0804.dgn

Scale: 40.000000:1.000000
Plotted on: 18-MAR-2003 10:14

UTILITY NOTES - TYPICAL ALL UTILITY SHEETS:

1. CONTRACTOR SHALL FOLLOW ALL CITY OF AUSTIN GUIDELINES AND REQUIREMENTS CONCERNING THE USE, HANDLING, AND DISPOSAL OF ASBESTOS CONTAINING MATERIALS, INCLUDING A.C. PIPE. ANY CONNECTION MADE TO AN A.C. WATER LINE FOR RELOCATION PURPOSES SHALL BEGIN AND END AT AN EXISTING A.C. PIPE JOINT.

2. EVERY EFFORT HAS BEEN MADE TO IDENTIFY ALL RECORDED FIRE LINES, WATER VALVES, WATER METERS, AND WASTEWATER MANHOLES. IT IS THE RESPONSIBILITY OF THE CONTRACTOR TO FIELD LOCATE AND RECONNECT ALL WATER AND WASTEWATER SERVICES DISRUPTED BY CONSTRUCTION OF THIS PROJECT WITH NEW PIPE FROM THE MAIN TO THE METER OR HOUSE CONNECTION. BACKFLOW PREVENTERS FOR FIRE LINES SHALL BE PROVIDED BY THE UTILITY CUSTOMER.

3. ALL WATER SERVICE LINES INSTALLED SHALL BE COPPER (MATCH EXISTING SIZE OR 1½" MINIMUM).

4. UNLESS NOTED OTHERWISE, ALL WATER LINE P.I.'S SHALL BE ACHIEVED USING PIPE MANUFACTURER'S ALLOWABLE JOINT DEFLECTION.

5. UNLESS NOTED OTHERWISE, THE EXISTING UTILITIES WERE PROVIDED BY THE CITY OF AUSTIN UTILITY RECORDS, ALONG WITH LIMITED SURVEY INFORMATION AND MAY NOT BE ENTIRELY ACCURATE. PRIOR TO THE START OF CONSTRUCTION, THE CONTRACTOR SHALL VERIFY THE LOCATION AND ELEVATION OF ALL UTILITIES TO BE EXTENDED, TIED TO, ALTERED, OR AFFECTED IN ANY WAY BY THIS CONSTRUCTION.

6. ALL EXISTING UTILITY LINES SHALL REMAIN IN SERVICE UNTIL THE PROPOSED LINES ARE COMPLETED, IN SERVICE, AND ACCEPTED FOR USE.

7. ALL PIPE DEFLECTIONS, VALVES, FITTINGS, ETC. SHALL BE SUPPORTED BY THRUST BLOCKS, OR RESTRAINED JOINTS IN ACCORDANCE WITH CITY OF AUSTIN UTILITY STANDARDS.

8. ENCASEMENT SPACERS SHALL BE "P.S.I." METALLIC CASING SPACER OR APPROVED EQUAL. CONTRACTOR SHALL SUBMIT CASING SPACER DESIGN SIGNED AND SEALED BY A LICENSED PROFESSIONAL ENGINEER.

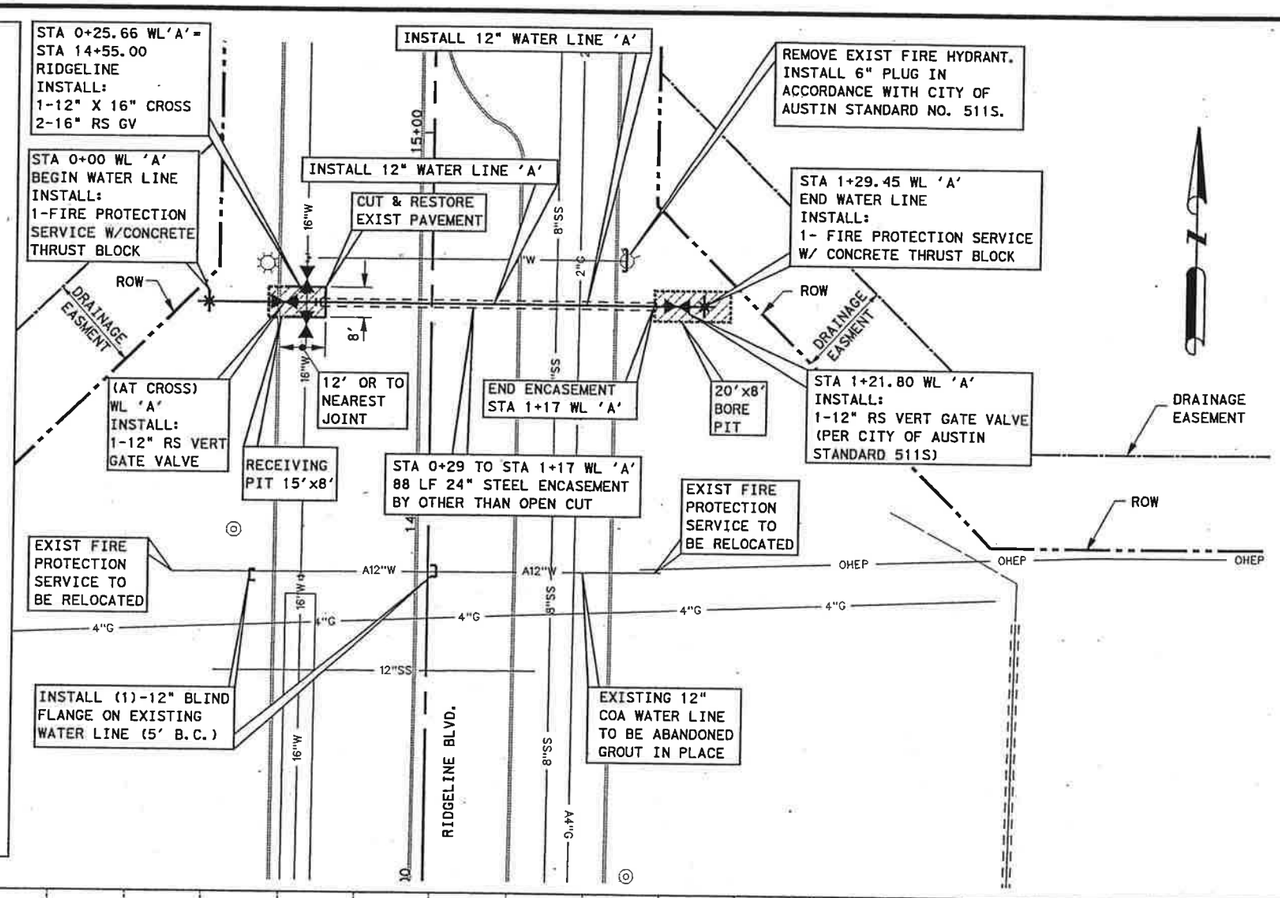

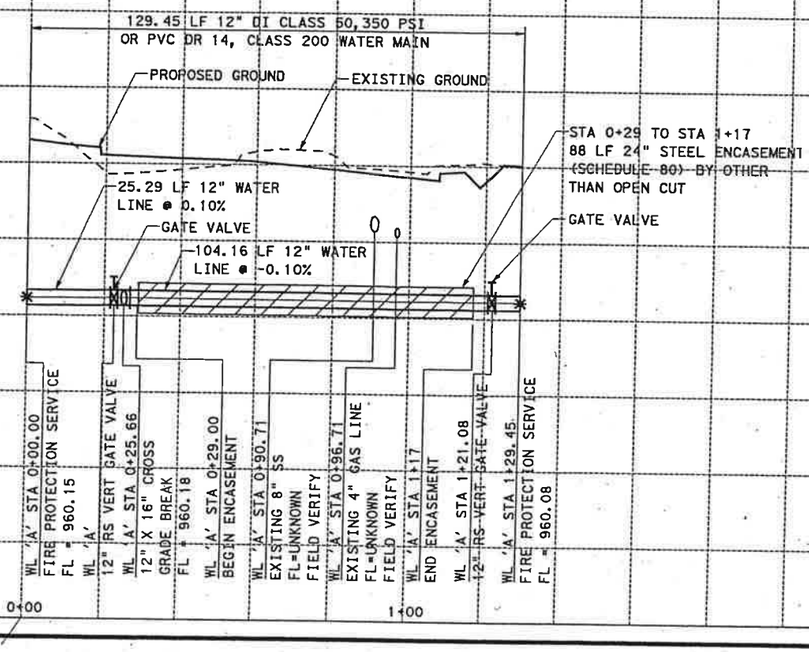

LEGEND

- WATER VALVE
- AIR RELEASE VALVE
- FIRE HYDRANT
- MANHOLE
- PROP WW MANHOLE
- CAP (BLIND FLANGE)
- PIPE REDUCER
- WATER VAULT
- FIRE PROTECTION SERVICE
- FUTURE WORK BY OTHERS
- 12"W — EXIST WATER LINE TO REMAIN IN SERVICE
- A12"W — EXIST WATER LINE TO BE ABANDONED
- 8"WW — EXIST WW LINE TO REMAIN IN SERVICE
- A12"SS — EXIST WW LINE TO BE ABANDONED
- UGT — EXIST TELEPHONE
- OHE — EXIST ELECTRIC LINE
- PROPOSED ROW
- PROP WATER LINE (SIZE AS SHOWN)
- PROP WW LN SIZE AS SHOWN
- PROP BORE PIT
- PROP ENCASEMENT PIPE AS SHOWN
- PROP ENCASEMENT BY OTHER THAN OPEN CUT AS SHOWN
- PROP PROFILE ENCASEMENT

STATE OF TEXAS
JOHN W. STRYBOS
64259
LICENSED PROFESSIONAL ENGINEER

John W. Stry

3/19/2003

WATER LINE "A" PLAN & PROFILE

SH45

SH 45 / US 183 INTERCHANGE

SCALE: PLAN 1": 40'
PROFILE 1": 10'

HNTB ARCHITECTS ENGINEERS PLANNERS
The HNTB Companies

Texas Department of Transportation
© 2003 TEXAS TURNPIKE AUTHORITY DIVISION

DRAWING PREPARED BY: HNTB CORPORATION			CITY OF AUSTIN SHEET NO.
SHEET 1 OF 1			A-42
FED. RD. DIV. NO.	FEDERAL AID PROJECT NO.		SHEET NO.
6	MG 2002 (243)		763
DGN:	STATE	DIST.	COUNTY
CHK DGN:	TEXAS	14	WILLIAMSON
DWG:	CONT.	SECT.	JOB / HIGHWAY NO.
CHK DWG:	0683	01	069 / SH 45

Pen Table: I:\Jobs\32058\TECHPROD\UTIL\Plots\32058utility.pen
Design Filename: I:\Jobs\32058\TECHPROD\UTIL\Dwg\PHS1\45wpp03.dgn

Scale= 40.000000:1.000000
Plotted on: 18-MAR-2003 10:14

℄ SH 45 WBFR"V"

BEGIN WL 'B'
STA 0+00 WL'B'=
STA 18+11.10
PECAN PARK
CONNECT TO EXIST
30" WATER LINE
INSTALL:
1-30" X 30" TEE
1-30" DD GATE VALVE
1-30" CAP (SOUTH)

EXISTING 12" PVC SS TO BE ABANDONED

EXISTING BOX CULVERT TO BE ABANDONED

EXISTING 12" PVC WW TO BE ABANDONED

PECAN PARK BLVD.

℄ PECAN PARK BLVD. "Y"

STA 0+48 WL'B-1'
INSTALL:
1-48" COUPLING
1-48" DD GATE VALVE
1-30" CAP (NORTH)
TIE TO EXIST 48"

EXIST 48" TO REMAIN

EXIST 30" TO REMAIN

PROPOSED 48" WATER LINE 'B-1'

EXISTING 30" COA WATER LINE AND ENCASEMENT TO BE ABANDONED GROUT IN PLACE

STA 4+32.50 WL'B'=
STA 0+00 WL 'B-1'
INSTALL:
1-48"X30" REDUCER
43 LF 48" WATER LINE
1-30"x30" TEE
1-30" RS GATE VALVE
2-30"x45° BEND
1-30"X24" REDUCER
5 LF 24" WATER LINE
1-24" RS GATE VALVE
CONN TO EXIST 24" WL

STA 0+56.00
WL 'B' BEGIN
48" STEEL
ENCASEMENT

℄ SH 45

INSTALL 48" STEEL ENCASEMENT

ROW

STA 0+44.38
WL 'B'
INSTALL:
1-30"x45° BEND
RESTRAINED JOINT
OR THRUST BLOCK

STA 0+54.55
WL 'B'
INSTALL:
1-30"x45° BEND
RESTRAINED JOINT
OR THRUST BLOCK

INSTALL 30" WATER LINE 'B'

STA 0+56 TO STA 4+23 WL 'B'
367 LF 48" STEEL ENCASEMENT
100 LF BY OTHER THAN OPEN CUT
(STA 3+23 TO STA 4+23)

10'X 20' BORE PIT

STA 4+23 WL'B'
END 48" STEEL
ENCASEMENT

RECEIVING PIT 10'x14'

STA 4+32.50, 5'RT
24" GATE VALVE

℄ SH 45 EBFR"W"

LEGEND

- WATER VALVE
- AIR RELEASE VALVE
- FIRE HYDRANT
- MANHOLE
- PROP WW MANHOLE
- CAP (BLIND FLANGE)
- PIPE REDUCER
- WATER VAULT
- FIRE PROTECTION SERVICE
- FUTURE WORK BY OTHERS
- 12"W — EXIST WATER LINE TO REMAIN IN SERVICE
- A12"W — EXIST WATER LINE TO BE ABANDONED
- 8"WW — EXIST WW LINE TO REMAIN IN SERVICE
- A12"SS — EXIST WW LINE TO BE ABANDONED
- UGT — EXIST TELEPHONE
- OHE — EXIST ELECTRIC LINE
- PROPOSED ROW
- PROP WATER LINE (SIZE AS SHOWN)
- PROP WW LN SIZE AS SHOWN
- PROP BORE PIT
- PROP ENCASEMENT PIPE AS SHOWN
- PROP ENCASEMENT BY OTHER THAN OPEN CUT AS SHOWN
- PROP PROFILE ENCASEMENT

STATE OF TEXAS
JOHN W. STRYBOS
64259
LICENSED
PROFESSIONAL ENGINEER

3/19/2003

Pen Table: I:\Jobs\3205B\TECHPROD\Util\Plots\3205Butility.pen
Design Filename: I:\Jobs\3205B\TECHPROD\UTIL\Dwg\PHS1\45wpp04.dgn

955
950
945
940
935
930
925
920

432.50 LF 30" DI CLASS 53, 350 PSI WATER MAIN

PROPOSED GROUND

EXISTING GROUND

LINE 'B1' ROTATED 90° SEE PLAN ABOVE

30" WL

48" GV

END WL 'B1' STA 0+48
CONNECT TO EXIST 48" WATER
48" COUPLING
48" RS GATE VALVE
F=UNKNOWN (FIELD VERIFY)

WL 'B' STA 0+78.83
PROPOSED 6' X 3'
STORMSEWER RCB
FL = 941.03

WL 'B' STA 1+23.71
PROPOSED 48"
STORMSEWER
FL = 939.89

WL 'B' STA 4+09.22
PROPOSED 42" STORMSEWER
FL = 940.72

64.55 LF 30"
WL @ -2.97%

100 LF- 48" ENCASEMENT BY OTHER THAN OPEN CUT

369.45 LF 30" WATER LINE @ 0.39% (RESTRAINED JOINTS)

48" STEEL ENCASEMENT

EXIST 48" FL

WATER LINE 'B'
43 LF 48" DI
CLASS 53, 350 PSI
WATER MAIN
MATCH EXIST FL(48")

LINE"B1"

WL 'B' STA 0+00.00
CONNECT TO EXISTING 30" WL
30" X 30" TEE
FL = 936.12 (VERIFY)

WL 'B' STA 0+13.00
30" RS GATE VALVE
FL = 935.74

WL 'B' STA 0+54.55
GRADE BREAK-45° BEND
FL = 934.50

WL 'B' STA 0+56.00
BEGIN 48" STEEL
ENCASEMENT

FL=934.68

FL=935.07

LINE "B"

367 LF - 48" STEEL ENCASEMENT
SCHEDULE XH - 0.500" WALL THICKNESS

FL=935.46

WL 'B' STA 3+23.00
BEGIN 48" STEEL ENCASEMENT
BY OTHER THAN OPEN CUT

WL 'B' STA 4+23.00
END 48" STEEL ENCASEMENT
BY OTHER THAN OPEN CUT

WL 'B' STA 4+24 AND
STA 4+27
FL = 935.95
WL 'B' STA 4+29.25
30"-RS GATE VALVE
FL = 936.84
WL 'B' STA 4+32.50=
WL 'B1' STA 0+00
30" X 30" TEE
FL = 938.13

WL 'B' STA 0+05
48"x30"-CONCENTRIC
REDUCER (LINE 'B1')
FL(30") = 938.13

0+00 1+00 2+00 3+00 4+00 4+32.50

WATER LINE "B" & "B1" PLAN & PROFILE

SH45

SH 45 / US 183 INTERCHANGE

SCALE: PLAN 1":40'
PROFILE 1":10'

HNTB ARCHITECTS ENGINEERS PLANNERS
The HNTB Companies

Texas Department of Transportation
© 2003 TEXAS TURNPIKE AUTHORITY DIVISION

DRAWING PREPARED BY: HNTB CORPORATION			CITY OF AUSTIN SHEET NO.
SHEET 1 OF 1			A-43
FED. DIV. NO.	FEDERAL AID PROJECT NO.		SHEET NO.
6	MG 2002 (243)		764
DGN:	STATE	DIST.	COUNTY
CHK DSN:	TEXAS	14	WILLIAMSON
DWN:	CONT.	SECT.	JOB / HIGHWAY NO.
CHK TRF:	0683	01	069 / SH 45

Scale= 40.000000:1.000000
Plotted on: 18-MAR-2003 10:14

STA 0+00 TO STA 0+06 WL 'C'
BEGIN WATER LINE
INSTALL:
1-12"x22.5° BEND
1-12" RS GATE VALVE
1-12"x6" TEE
1-6" RS GATE VALVE
1-FIRE HYDRANT ASSEMBLY
8 LF-6" WATER LINE
12" CAP (EAST)
CONN TO EXISTING 12" WL

CUT AND PLUG EXIST 12" WL

INSTALL 12" WATER LINE 'C'

STA 3+50.00 WL 'C'
INSTALL:
1-12"x6" TEE
1-6" RS GATE VALVE
1-FIRE HYDRANT ASSEMBLY
8 LF 6" WATER LINE

STA 3+54 WL 'C'
INSTALL:
1- 12" RS GATE VALVE

ROW
11' TYP

SBWB CONN. "N"

MATCH LINE STA. 4+80

℄ SH 45 WBFR "V"

0+00 1+00 2+00 3+00 4+00 148+00 149+00 A12"W

LEGEND

- WATER VALVE
- AIR RELEASE VALVE
- FIRE HYDRANT
- MANHOLE
- PROP WW MANHOLE
- CAP (BLIND FLANGE)
- PIPE REDUCER
- WATER VAULT
- FIRE PROTECTION SERVICE
- FUTURE WORK BY OTHERS
- 12"W — EXIST WATER LINE TO REMAIN IN SERVICE
- A12"W — EXIST WATER LINE TO BE ABANDONED
- 8"WW — EXIST WW LINE TO REMAIN IN SERVICE
- A12"SS — EXIST WW LINE TO BE ABANDONED
- UGT — EXIST TELEPHONE
- OHE — EXIST ELECTRIC LINE
- PROPOSED ROW
- PROP WATER LINE (SIZE AS SHOWN)
- PROP WW LN SIZE AS SHOWN
- PROP BORE PIT
- PROP ENCASEMENT PIPE AS SHOWN
- PROP ENCASEMENT BY OTHER THAN OPEN CUT AS SHOWN
- PROP PROFILE ENCASEMENT

STATE OF TEXAS
JOHN W. STRYBOS
64259
LICENSED PROFESSIONAL ENGINEER
3/19/2003

945 940 935 930 925 920 915 910

480 LF 12" DI CLASS 50, 350 PSI
OR PVC DR 14, CLASS 200 WATER MAIN

EXISTING GROUND

PROPOSED GROUND

480.00 LF 12" WATER LINE @ -0.06%

WL 'C' STA 0+00.00
CONNECT TO EXISTING 12" WL
12" x 22.5° BEND
FL = 923.54 (VERIFY)

WL 'C' STA 0+06
12"x6" TEE
FIRE HYDRANT ASSEMBLY
FL = 923.54

FL=923.48

FL=923.42

FL=923.36

WL 'C' STA 3+50.00
12"x6" TEE
FIRE HYDRANT ASSEMBLY
FL = 923.33

WL 'C' STA 3+54
12" RS GATE VALVE
FL = 923.32

FL=923.30

FL=923.25

MATCH LINE STA. 4+80

0+00 1+00 2+00 3+00 4+00

WATER LINE "C" PLAN & PROFILE

SH45

SH 45 / US 183 INTERCHANGE

SCALE: PLAN 1":40'
PROFILE 1":10'

HNTB ARCHITECTS ENGINEERS PLANNERS
The HNTB Companies

Texas Department of Transportation
© 2003 TEXAS TURNPIKE AUTHORITY DIVISION

DRAWING PREPARED BY: HNTB CORPORATION			CITY OF AUSTIN SHEET NO.
SHEET 1 OF 2			A-44
FED. RD. DIV. NO.	FEDERAL AID PROJECT NO.		SHEET NO.
6	MG 2002 (243)		765
DGN:	STATE	DIST.	COUNTY
CHK DSN:	TEXAS	14	WILLIAMSON
DWG:	CONT.	SECT.	JOB / HIGHWAY NO.
CHK DWG:	0683	01	069 / SH 45

Pen Table: I:\Jobs\32058\TECHPROD\Util\Plots\32058util1ty.pen
Design Filename: I:\Jobs\32058\TECHPROD\UTIL\Dwg\PHS1\45wpp07.dgn

Scale: 40.000000:1.000000
Plotted on: 18-MAR-2003 10:15

Pen Tables: J:\Jobs\32058\TECHPROD\UTIL\Plots\32058utility.pen
Design Filename: J:\Jobs\32058\TECHPROD\UTIL\Dwg\PHS1\45wpp08.dgn

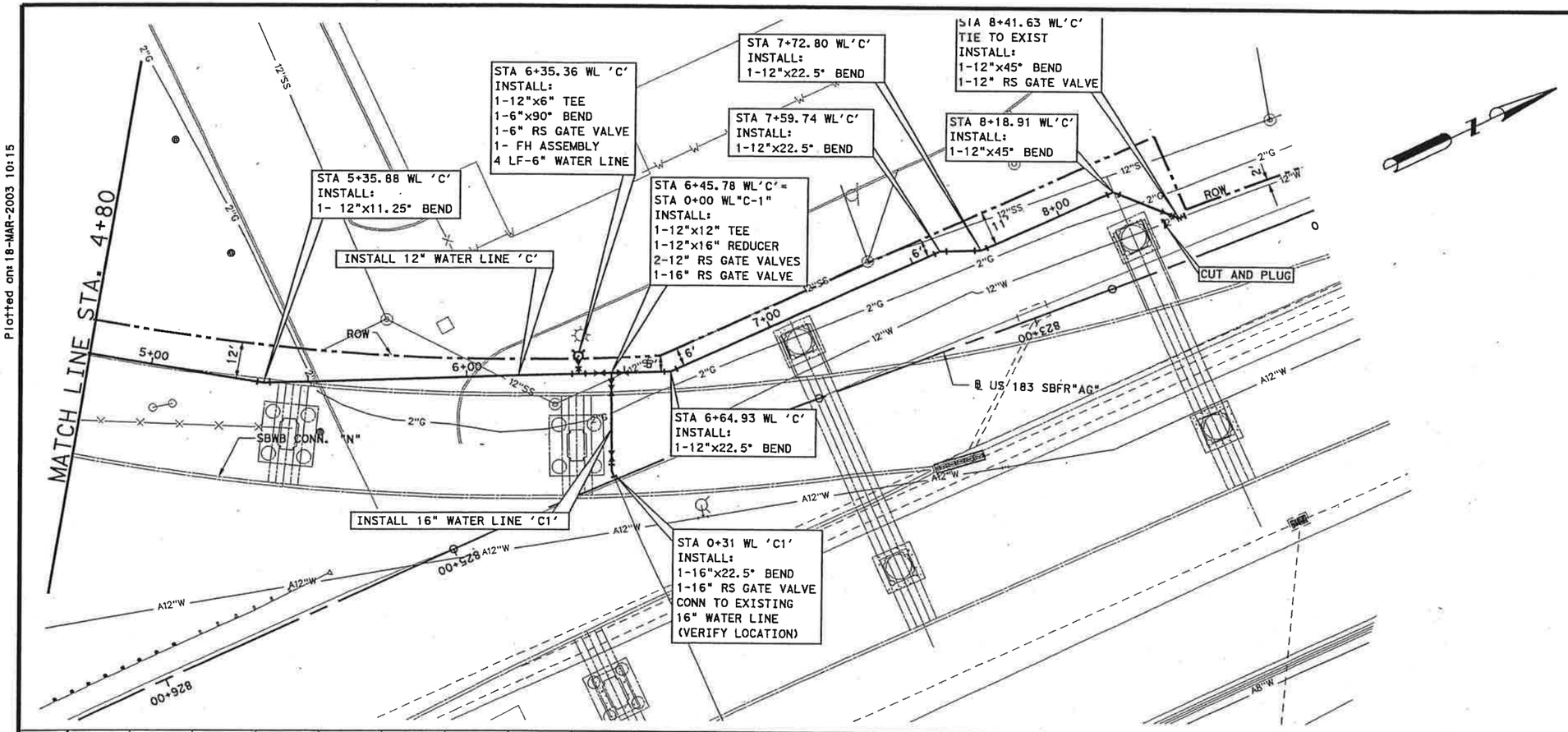

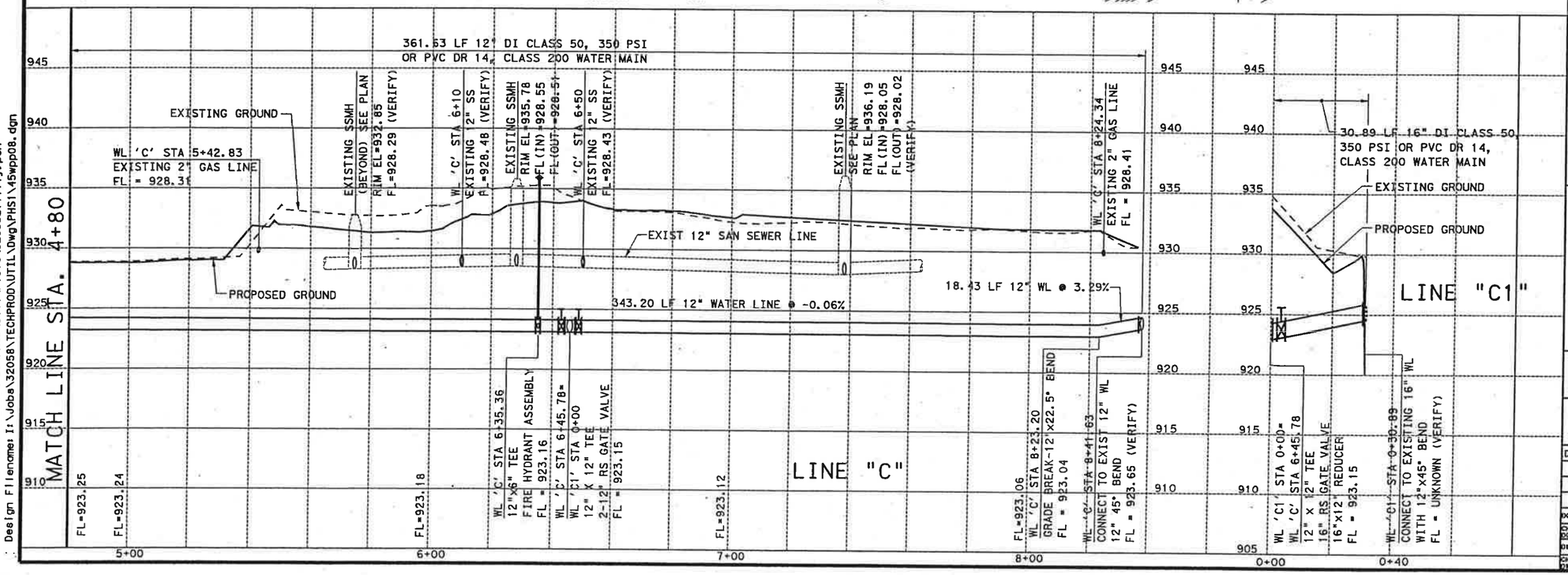

LEGEND

- WATER VALVE
- AIR RELEASE VALVE
- FIRE HYDRANT
- MANHOLE
- PROP WW MANHOLE
- CAP (BLIND FLANGE)
- PIPE REDUCER
- WATER VAULT
- FIRE PROTECTION SERVICE
- FUTURE WORK BY OTHERS
- 12"W — EXIST WATER LINE TO REMAIN IN SERVICE
- A12"W — EXIST WATER LINE TO BE ABANDONED
- 8"WW — EXIST WW LINE TO REMAIN IN SERVICE
- A12"SS — EXIST WW LINE TO BE ABANDONED
- UGT — EXIST TELEPHONE
- OHE — EXIST ELECTRIC LINE
- PROPOSED ROW
- PROP WATER LINE (SIZE AS SHOWN)
- PROP WW LN SIZE AS SHOWN
- PROP BORE PIT
- PROP ENCASEMENT PIPE AS SHOWN
- PROP ENCASEMENT BY OTHER THAN OPEN CUT AS SHOWN
- PROP PROFILE ENCASEMENT

STATE OF TEXAS
JOHN W. STRYBOS
64259
LICENSED PROFESSIONAL ENGINEER
3/19/2003

WATER LINE "C" &"C1" PLAN & PROFILE

SH45

SH 45 / US 183 INTERCHANGE

SCALE: PLAN 1":40'
PROFILE 1":10'

HNTB ARCHITECTS ENGINEERS PLANNERS
The HNTB Companies

Texas Department of Transportation

© 2003 TEXAS TURNPIKE AUTHORITY DIVISION

DRAWING PREPARED BY: HNTB CORPORATION			CITY OF AUSTIN SHEET NO.
SHEET 2 OF 2			A-45
FED. RD. DIV. NO.	FEDERAL AID PROJECT NO.		SHEET NO.
6	MG 2002 (243)		766
DGN:	STATE	DIST.	COUNTY
CHK. DGN:	TEXAS	14	WILLIAMSON
DWG:	CONT.	SECT.	JOB / HIGHWAY NO.
CHK. DWG:	0683	01	069 / SH 45

Scale: 40.0000001:1.000000
Plotted on: 18-MAR-2003 10:15

Pen Table: I:\Jobs\32058\TECHPROD\UTIL\Plots\32058utility.pen
Design Filename: I:\Jobs\32058\TECHPROD\UTIL\Dwg\PHS1\45wppl1.dgn

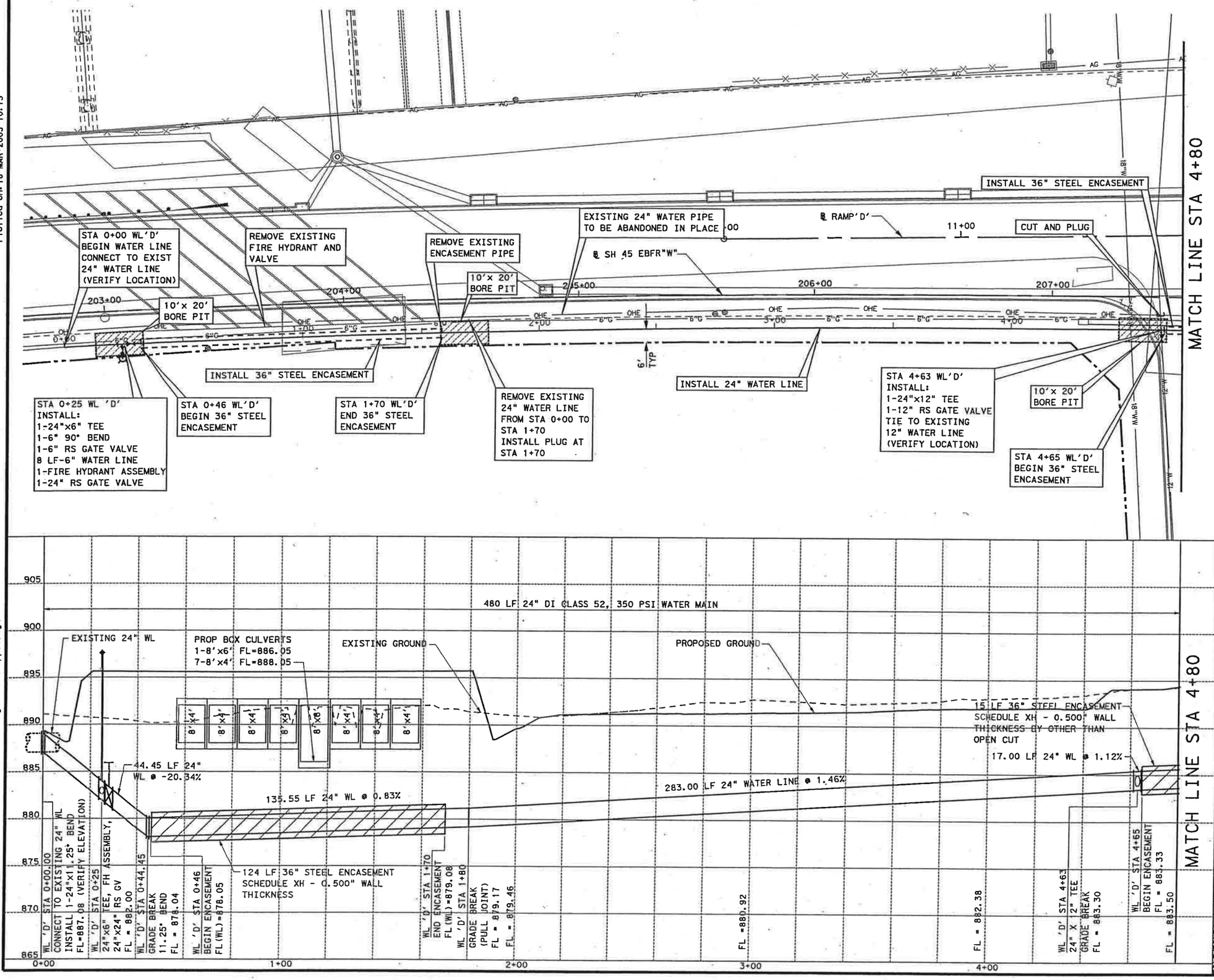

LEGEND

- WATER VALVE
- AIR RELEASE VALVE
- FIRE HYDRANT
- MANHOLE
- PROP WW MANHOLE
- CAP (BLIND FLANGE)
- PIPE REDUCER
- WATER VAULT
- FIRE PROTECTION SERVICE
- FUTURE WORK BY OTHERS
- 12"W — EXIST WATER LINE TO REMAIN IN SERVICE
- A12"W — EXIST WATER LINE TO BE ABANDONED
- 8"WW — EXIST WW LINE TO REMAIN IN SERVICE
- A12"SS — EXIST WW LINE TO BE ABANDONED
- UGT — EXIST TELEPHONE
- OHE — EXIST ELECTRIC LINE
- PROPOSED ROW
- PROP WATER LINE (SIZE AS SHOWN)
- PROP WW LN SIZE AS SHOWN
- PROP BORE PIT
- PROP ENCASEMENT PIPE AS SHOWN
- PROP ENCASEMENT BY OTHER THAN OPEN CUT AS SHOWN
- PROP PROFILE ENCASEMENT

STATE OF TEXAS
JOHN W. STRYBOS
64259
LICENSED
PROFESSIONAL ENGINEER

3/19/2003

WATER LINE "D" PLAN & PROFILE

SH45

SH 45 / US 183 INTERCHANGE

SCALE: PLAN 1":40'
PROFILE 1":10'

HNTB ARCHITECTS ENGINEERS PLANNERS
The HNTB Companies

Texas Department of Transportation

© 2003 TEXAS TURNPIKE AUTHORITY DIVISION

DRAWING PREPARED BY: HNTB CORPORATION			CITY OF AUSTIN SHEET NO.
SHEET 1 OF 3			A-46
FED. RD. DIV. NO.	FEDERAL AID PROJECT NO.		SHEET NO.
6	MG 2002 (243)		767
DGN:	STATE	DIST.	COUNTY
CHK DSN:	TEXAS	14	WILLIAMSON
DWG:	CONT.	SECT.	JOB / HIGHWAY NO.
CHK DWG:	0683	01	069 / SH 45

Scale: 40.000004:1.000000
Plotted on: 18-MAR-2003 10:15

Pen Table: I:\Jobs\32058\TECHPROD\Util\Plots\32058Utility.pen
Design Filename: I:\Jobs\32058\TECHPROD\UTIL\Dwg\PHSI\45wppl2.dgn

MATCH LINE STA. 4+80

STA 5+13 WL'D'
END 36" STEEL
ENCASEMENT

STA 5+25 WL'D'
INSTALL:
1-24"x6" TEE
1-6" RS GATE VALVE
1-FIRE HYDRANT ASSEMBLY
6 LF-6" WATER LINE

STA 5+33 WL'D'
INSTALL:
1-24"x8" TEE
1-8" RS GATE VALVE
1-8" PLUG
6 LF-8" WATER LINE
(FOR FUTURE USE)

10'x 20'
BORE PIT

EXISTING 24" WATER PIPE
TO BE ABANDONED IN PLACE

INSTALL 24" WATER LINE

℄ RAMP'D'

℄ SH 45 EBFR"W"

MATCH LINE STA 9+60

480 LF 24" DI CLASS 52, 350 PSI WATER MAIN

EXISTING GROUND

PROPOSED GROUND

33 LF 36" STEEL ENCASEMENT
SCHEDULE XH - 0.500" WALL
THICKNESS BY OTHER THAN
OPEN CUT

480.00 LF 24" WATER LINE @ 1.12%

WL 'D' STA 5+13
END ENCASEMENT
FL = 883.86

WL 'D' STA 5+25
24"x6" TEE,
FIRE HYDRANT ASSEMBLY
FL = 884.00

WL 'D' STA 5+33
24"x8" TEE
FL = 884.09

FL = 883.50
FL = 883.72
FL = 884.84
FL = 885.96
FL = 887.08
FL = 888.20
FL = 888.87

LEGEND

- WATER VALVE
- AIR RELEASE VALVE
- FIRE HYDRANT
- MANHOLE
- PROP WW MANHOLE
- CAP (BLIND FLANGE)
- PIPE REDUCER
- WATER VAULT
- FIRE PROTECTION SERVICE
- FUTURE WORK BY OTHERS
- 12"W — EXIST WATER LINE TO REMAIN IN SERVICE
- A12"W — EXIST WATER LINE TO BE ABANDONED
- 8"WW — EXIST WW LINE TO REMAIN IN SERVICE
- A12"SS — EXIST WW LINE TO BE ABANDONED
- UGT — EXIST TELEPHONE
- OHE — EXIST ELECTRIC LINE
- PROPOSED ROW
- PROP WATER LINE (SIZE AS SHOWN)
- PROP WW LN SIZE AS SHOWN
- PROP BORE PIT
- PROP ENCASEMENT PIPE AS SHOWN
- PROP ENCASEMENT BY OTHER THAN OPEN CUT AS SHOWN
- PROP PROFILE ENCASEMENT

STATE OF TEXAS
JOHN W. STRYBOS
64259
LICENSED
PROFESSIONAL ENGINEER

3/19/2003

WATER LINE "D" PLAN & PROFILE

SH45

SH 45 / US 183 INTERCHANGE

SCALE: PLAN 1":40'
PROFILE 1":10'

HNTB ARCHITECTS ENGINEERS PLANNERS
The HNTB Companies

Texas Department of Transportation

© 2003 TEXAS TURNPIKE AUTHORITY DIVISION

DRAWING PREPARED BY: HNTB CORPORATION			CITY OF AUSTIN SHEET NO.
SHEET 2 OF 3			A-47
FED. RD. DIV. NO.	FEDERAL AID PROJECT NO.		SHEET NO.
6	MG 2002 (243)		768

DGN:	STATE	DIST.	COUNTY
CHK DSN:	TEXAS	14	WILLIAMSON
DWG:	CONT.	SECT.	JOB / HIGHWAY NO.
CHK DWG:	0683	01	069 / SH 45

Scale: 40.0000041, 0.000000
Plotted on: 18-MAR-2003 10:15

MATCH LINE STA 9+60

EXISTING 24" WATER LINE TO BE ABANDONED IN PLACE

EXISTING 16" WATER LINE TO BE ABANDONED IN PLACE

EXISTING 24" WATER LINE TO BE ABANDONED IN PLACE

STA 10+87 WL 'D' =
STA 0+00 WL 'D1' =
STA 0+00 WL 'D2'
END LINE 'D'
INSTALL:
1-24"x24" TEE
1-24"x16" REDUCER
2-24" RS GATE VALVES
1-16" RS GATE VALVE
BEGIN LINE 'D1'
BEGIN LINE 'D2'

STA 10+75 WL 'D'
INSTALL:
1-24"x6" TEE
1-6" RS GATE VALVE
1-FIRE HYDRANT ASSEMBLY
4 LF-6" WATER LINE

INSTALL 24" WATER LINE

LINE 'D2'
LINE 'D'
LINE 'D1'

17+00 18+00 19+00 20+00 21+00 213+00 214+00 215+00 216+00 10+00 8+00 1+00 2+00

LEGEND

- WATER VALVE
- AIR RELEASE VALVE
- FIRE HYDRANT
- MANHOLE
- PROP WW MANHOLE
- CAP (BLIND FLANGE)
- PIPE REDUCER
- WATER VAULT
- FIRE PROTECTION SERVICE
- FUTURE WORK BY OTHERS
- 12"W — EXIST WATER LINE TO REMAIN IN SERVICE
- A12"W — EXIST WATER LINE TO BE ABANDONED
- 8"WW — EXIST WW LINE TO REMAIN IN SERVICE
- A12"SS — EXIST WW LINE TO BE ABANDONED
- UGT — EXIST TELEPHONE
- OHE — EXIST ELECTRIC LINE
- PROPOSED ROW
- PROP WATER LINE (SIZE AS SHOWN)
- PROP WW LN SIZE AS SHOWN
- PROP BORE PIT
- PROP ENCASEMENT PIPE AS SHOWN
- PROP ENCASEMENT BY OTHER THAN OPEN CUT AS SHOWN
- PROP PROFILE ENCASEMENT

STATE OF TEXAS
JOHN W. STRYBOS
64259
LICENSED PROFESSIONAL ENGINEER

3/19/2003

905
900
895
890
885
880
875
870
865

127.00 LF 24" DI CLASS 52, 350 PSI WATER MAIN
EXISTING GROUND
PROPOSED GROUND
127.00 LF 24" WATER LINE @ 1.12%

MATCH LINE STA 9+60

FL = 888.87
FL = 889.32

WL 'D1' STA 10+75
24"x6" TEE
FIRE HYDRANT ASSEMBLY
FL = 890.16

WL 'D' STA 10+87
24" x 24" TEE
24" RS GATE VALVE
24"x16" REDUCER
16" RS GATE VALVE
FL = 890.29

16" WATER LINE 'D1'
FOR CONTINUATION
SEE SHEET XXX

10+00 11+00

WATER LINE "D" PLAN & PROFILE
SH45

SH 45 / US 183 INTERCHANGE

SCALE: PLAN 1":40'
PROFILE 1":10'

HNTB ARCHITECTS ENGINEERS PLANNERS
The HNTB Companies

Texas Department of Transportation
© 2003 TEXAS TURNPIKE AUTHORITY DIVISION

DRAWING PREPARED BY: HNTB CORPORATION			CITY OF AUSTIN SHEET NO.
SHEET 3 OF 3			A-48
FED. RD. DIV. NO.	FEDERAL AID PROJECT NO.		SHEET NO.
6	MG 2002 (243)		769
DGN:	STATE	DIST.	COUNTY
CHK DGN:	TEXAS	14	WILLIAMSON
DWG:	CONT.	SECT.	JOB / HIGHWAY NO.
CHK DWG:	0683	01	069 / SH 45

Pen Table: I:\Jobs\32058\TECHPROD\UTIL\Plots\32058utility.pen
Design Filename: I:\Jobs\32058\TECHPROD\UTIL\Dwg\PHS1\45wpp13A.dgn

Scale: 40.000000:1.000000
Plotted on: 18-MAR-2003 10:16

Pen Tables: \Jobs\32058\TECHPROD\UTIL\Plots\32058utility.pen
Design Filename: I:\Jobs\32058\TECHPROD\UTIL\DWG\PHS1\45wpp14A.dgn

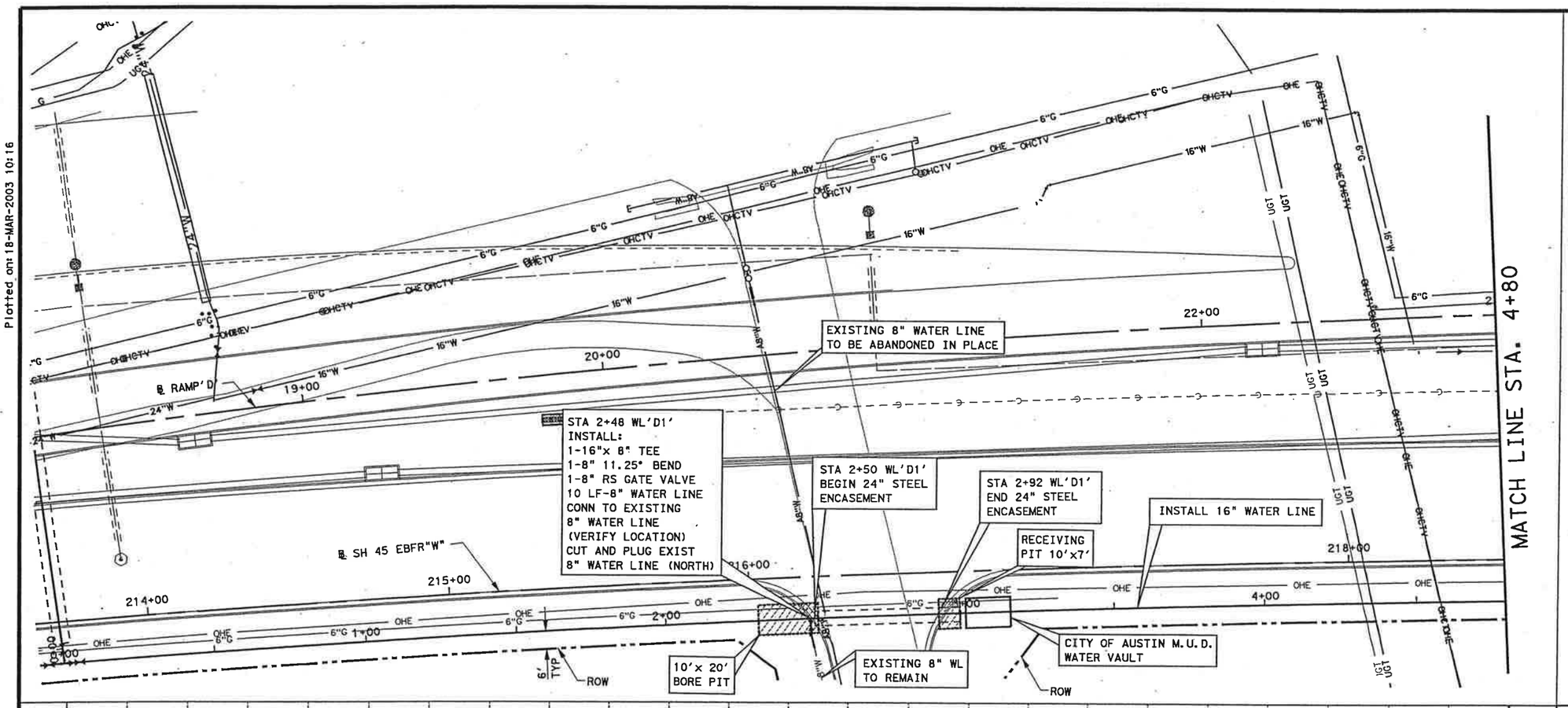

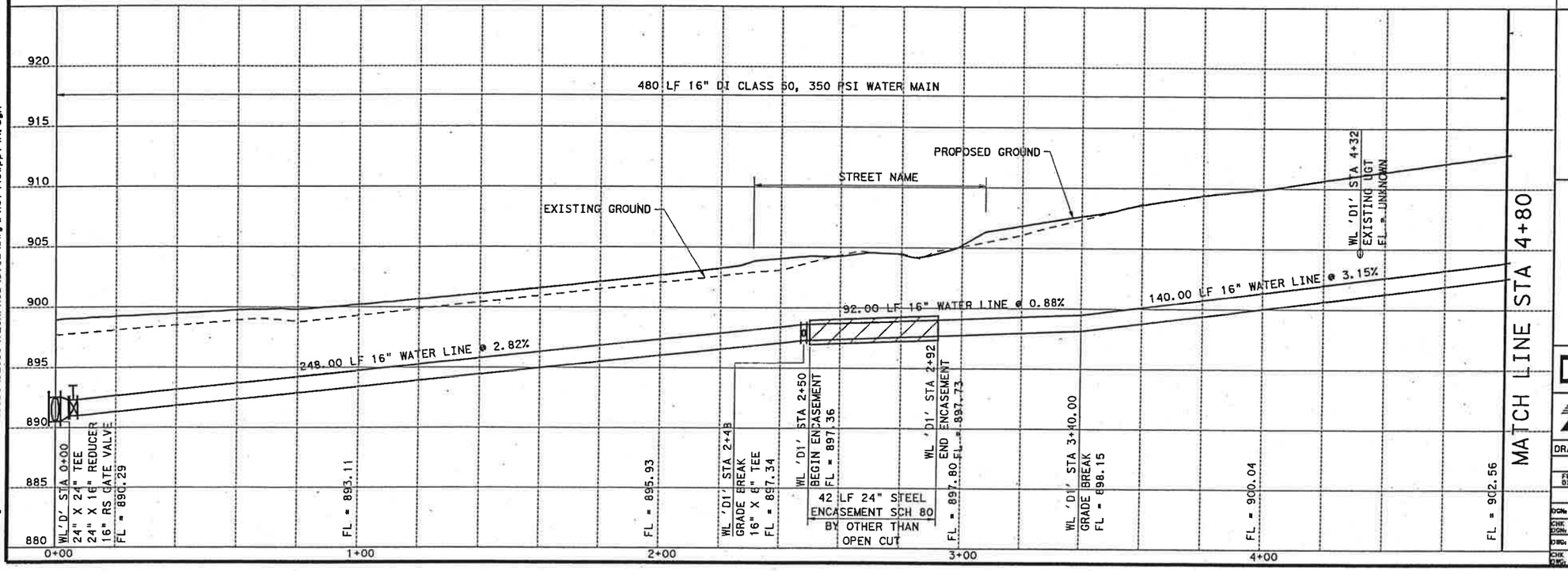

LEGEND

- WATER VALVE
- AIR RELEASE VALVE
- FIRE HYDRANT
- MANHOLE
- PROP WW MANHOLE
- CAP (BLIND FLANGE)
- PIPE REDUCER
- WATER VAULT
- FIRE PROTECTION SERVICE
- FUTURE WORK BY OTHERS
- 12"W — EXIST WATER LINE TO REMAIN IN SERVICE
- A12"W — EXIST WATER LINE TO BE ABANDONED
- 8"WW — EXIST WW LINE TO REMAIN IN SERVICE
- A12"SS — EXIST WW LINE TO BE ABANDONED
- UGT — EXIST TELEPHONE
- OHE — EXIST ELECTRIC LINE
- PROPOSED ROW
- PROP WATER LINE (SIZE AS SHOWN)
- PROP WW LN SIZE AS SHOWN
- PROP BORE PIT
- PROP ENCASEMENT PIPE AS SHOWN
- PROP ENCASEMENT BY OTHER THAN OPEN CUT AS SHOWN
- PROP PROFILE ENCASEMENT

STATE OF TEXAS
JOHN W. STRYBOS
64259
LICENSED
PROFESSIONAL ENGINEER

3/19/2003

WATER LINE "D1" PLAN & PROFILE

SH45

SH 45 / US 183 INTERCHANGE

SCALE: PLAN 1":40'
PROFILE 1":10'

HNTB ARCHITECTS ENGINEERS PLANNERS
The HNTB Companies

Texas Department of Transportation

© 2003 TEXAS TURNPIKE AUTHORITY DIVISION

DRAWING PREPARED BY: HNTB CORPORATION			CITY OF AUSTIN SHEET NO.
SHEET 1 OF 7			A-49
FED. RD. DIV. NO.	FEDERAL AID PROJECT NO.		SHEET NO.
6	MG 2002 (243)		770
DGN:	STATE	DIST.	COUNTY
CHK DGN:	TEXAS	14	WILLIAMSON
DWG:	CONT.	SECT.	JOB / HIGHWAY NO.
CHK DWG:	0683	01	069 / SH 45

Scale: 40.000000:1.000000
Plotted on: 18-MAR-2003 10:16

Pen Table: I:\Jobs\32058\TECHPROD\UTIL\Plots\32058utility.pen
Design Filename: I:\Jobs\32058\TECHPROD\UTIL\Dwg\PHS1\45wpp14B.dgn

MATCH LINE STA. 4+80

EXISTING 16" WATER LINE TO BE ABANDONED IN PLACE

EXISTING FH ASSEMBY TO BE REMOVED

STA 5+15 WL'D1'
INSTALL:
1-16"x8" TEE
1-8" RS GATE VALVE
4 LF-8" WATER PIPE
1-8" PLUG FOR FUTURE USE

INSTALL 16" WATER LINE

STA 6+90 WL'D1'
INSTALL:
1-16"X6" TEE
1-6" RS GATE VALVE
4 LF-6" WATER LINE
1-FIRE HYDRANT ASSEMBLY
1-16" RS GATE VALVE

STA 8+40 WL 'D1'
2" AIR RELEASE VALVE
INSTALLATION PER
CITY OF AUSTIN
STANDARDS

℄ RAMP 'D'

℄ SH 45 EBFR"W"

ROW

6' TYP

MATCH LINE STA. 9+60

480 LF 16" DI CLASS 50, 350 PSI WATER MAIN

PROPOSED GROUND

EXISTING GROUND

120.00 LF 16" WATER LINE @ 3.15%

240.00 LF 16" WATER LINE @ 1.67%

120.00 LF 16" WATER LINE @ -0.62%

WL 'D1' STA 5+15
16" X 8" TEE
FL = 903.66

WL 'D1' STA 6+00
GRADE BREAK
FL = 906.34

WL 'D1' STA 6+90
16"X6" TEE
FIRE HYDRANT ASSEMBLY
16" RS GATE VALVE
FL = 907.84

WL 'D1' STA 8+40
GRADE BREAK
2" AIR RELEASE VALVE
INSTALLATION
FL = 910.34

FL = 902.56
FL = 903.19
FL = 906.34
FL = 908.01
FL = 909.68
FL = 909.97
FL = 909.60

LEGEND

- WATER VALVE
- AIR RELEASE VALVE
- FIRE HYDRANT
- MANHOLE
- PROP WW MANHOLE
- CAP (BLIND FLANGE)
- PIPE REDUCER
- WATER VAULT
- FIRE PROTECTION SERVICE
- FUTURE WORK BY OTHERS
- 12"W — EXIST WATER LINE TO REMAIN IN SERVICE
- A12"W — EXIST WATER LINE TO BE ABANDONED
- 8"WW — EXIST WW LINE TO REMAIN IN SERVICE
- A12"SS — EXIST WW LINE TO BE ABANDONED
- UGT — EXIST TELEPHONE
- OHE — EXIST ELECTRIC LINE
- PROPOSED ROW
- PROP WATER LINE (SIZE AS SHOWN)
- PROP WW LN SIZE AS SHOWN
- PROP BORE PIT
- PROP ENCASEMENT PIPE AS SHOWN
- PROP ENCASEMENT BY OTHER THAN OPEN CUT AS SHOWN
- PROP PROFILE ENCASEMENT

STATE OF TEXAS
JOHN W. STRYBOS
64259
LICENSED PROFESSIONAL ENGINEER

3/19/2003

WATER LINE "D1" PLAN & PROFILE

SH45

SH 45 / US 183 INTERCHANGE

SCALE: PLAN 1":40'
PROFILE 1":10'

HNTB ARCHITECTS ENGINEERS PLANNERS
The HNTB Companies

Texas Department of Transportation

© 2003 TEXAS TURNPIKE AUTHORITY DIVISION

DRAWING PREPARED BY: HNTB CORPORATION			CITY OF AUSTIN SHEET NO.
SHEET 2 OF 7			A-50
FED. RD. DIV. NO.	FEDERAL AID PROJECT NO.		SHEET NO.
6	MG 2002 (243)		771

DGN:	STATE	DIST.	COUNTY
CHK DGN:	TEXAS	14	WILLIAMSON
DWG:	CONT.	SECT.	JOB / HIGHWAY NO.
CHK DWG:	0683	01	069 / SH 45

Scale: 40.000000:1.000000
Plotted on: 18-MAR-2003 10:16

Pen Tables: I:\Jobs\32058\TECHPROD\UTIL\Plots\32058ut111+y.pen
Design Filename: I:\Jobs\32058\TECHPROD\UTIL\Dwg\PHS1\45wpp14C.dgn

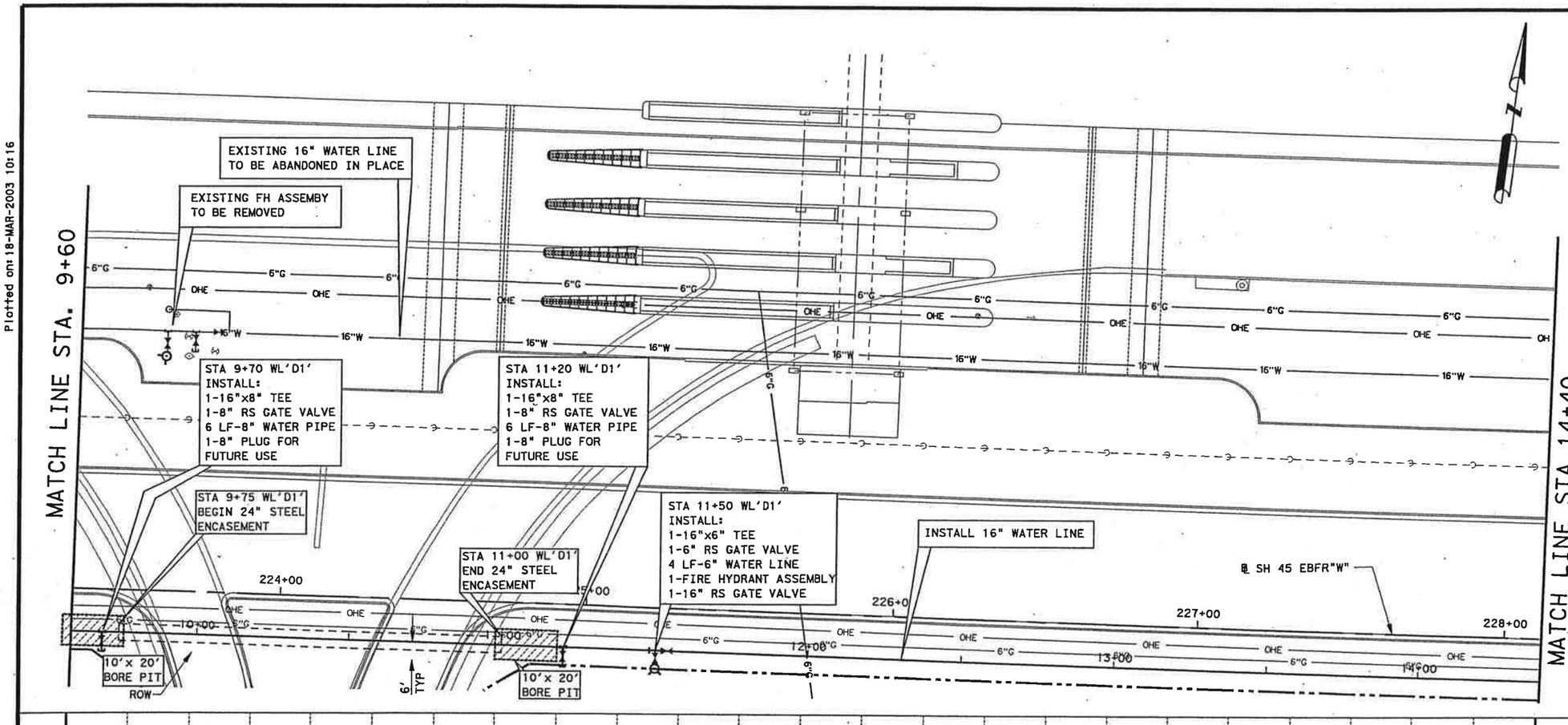

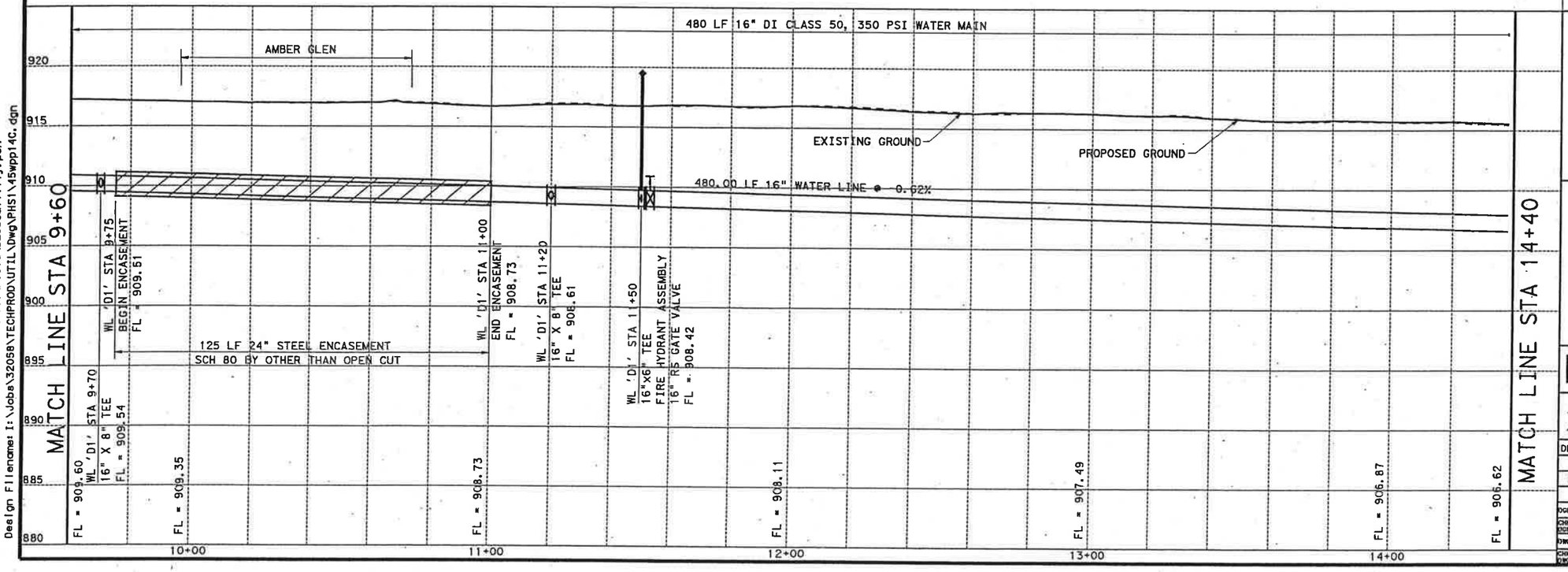

LEGEND

- WATER VALVE
- AIR RELEASE VALVE
- FIRE HYDRANT
- MANHOLE
- PROP WW MANHOLE
- CAP (BLIND FLANGE)
- PIPE REDUCER
- WATER VAULT
- FIRE PROTECTION SERVICE
- FUTURE WORK BY OTHERS
- 12"W — EXIST WATER LINE TO REMAIN IN SERVICE
- A12"W — EXIST WATER LINE TO BE ABANDONED
- 8"WW — EXIST WW LINE TO REMAIN IN SERVICE
- A12"SS — EXIST WW LINE TO BE ABANDONED
- UGT — EXIST TELEPHONE
- OHE — EXIST ELECTRIC LINE
- PROPOSED ROW
- PROP WATER LINE (SIZE AS SHOWN)
- PROP WW LN SIZE AS SHOWN
- PROP BORE PIT
- PROP ENCASEMENT PIPE AS SHOWN
- PROP ENCASEMENT BY OTHER THAN OPEN CUT AS SHOWN
- PROP PROFILE ENCASEMENT

STATE OF TEXAS
JOHN W. STRYBOS
64259
LICENSED PROFESSIONAL ENGINEER

3/19/2003

WATER LINE "D1" PLAN & PROFILE

SH45

SH 45 / US 183 INTERCHANGE

SCALE: PLAN 1":40'
PROFILE 1":10'

HNTB ARCHITECTS ENGINEERS PLANNERS
The HNTB Companies

Texas Department of Transportation

© 2003 TEXAS TURNPIKE AUTHORITY DIVISION

DRAWING PREPARED BY: HNTB CORPORATION			CITY OF AUSTIN SHEET NO.
SHEET 3 OF 7			A-51
FED. RD. DIV. NO.	FEDERAL AID PROJECT NO.		SHEET NO.
6	MG 2002 (243)		772
DGN:	STATE	DIST.	COUNTY
CHK DGN:	TEXAS	14	WILLIAMSON
DWG:	CONT.	SECT.	JOB / HIGHWAY NO.
CHK DWG:	0683	01	069 / SH 45

Scale= 40.0000001:1.000000
Plotted on: 18-MAR-2003 10:17

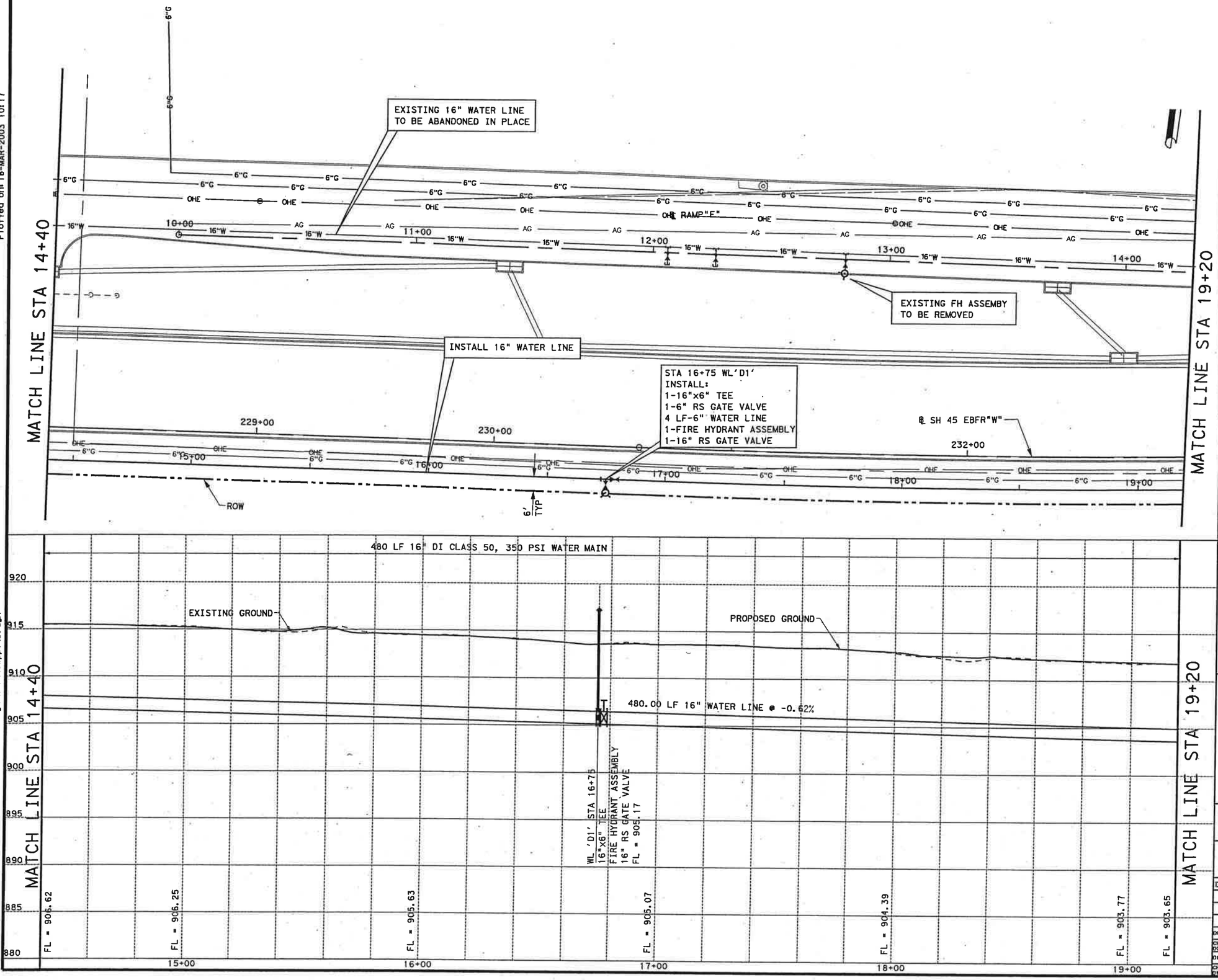

LEGEND

- WATER VALVE
- AIR RELEASE VALVE
- FIRE HYDRANT
- MANHOLE
- PROP WW MANHOLE
- CAP (BLIND FLANGE)
- PIPE REDUCER
- WATER VAULT
- FIRE PROTECTION SERVICE
- FUTURE WORK BY OTHERS
- 12"W — EXIST WATER LINE TO REMAIN IN SERVICE
- A12"W — EXIST WATER LINE TO BE ABANDONED
- B"WW — EXIST WW LINE TO REMAIN IN SERVICE
- A12"SS — EXIST WW LINE TO BE ABANDONED
- UGT — EXIST TELEPHONE
- OHE — EXIST ELECTRIC LINE
- PROPOSED ROW
- PROP WATER LINE (SIZE AS SHOWN)
- PROP WW LN SIZE AS SHOWN
- PROP BORE PIT
- PROP ENCASEMENT PIPE AS SHOWN
- PROP ENCASEMENT BY OTHER THAN OPEN CUT AS SHOWN
- PROP PROFILE ENCASEMENT

STATE OF TEXAS
JOHN W. STRYBOS
64259
LICENSED
PROFESSIONAL ENGINEER

John W. Strybos
3/19/2003

WATER LINE "D1" PLAN & PROFILE

SH45

SH 45 / US 183 INTERCHANGE

SCALE: PLAN 1":40'
PROFILE 1":10'

HNTB ARCHITECTS ENGINEERS PLANNERS
The HNTB Companies

Texas Department of Transportation
© 2003 TEXAS TURNPIKE AUTHORITY DIVISION

DRAWING PREPARED BY: HNTB CORPORATION			CITY OF AUSTIN SHEET NO.
SHEET 4 OF 7			A-52
FED. RD. DIV. NO.	FEDERAL AID PROJECT NO.		SHEET NO.
6	MG 2002 (243)		773

DGN:	STATE	DIST.	COUNTY
CHK. DGN:	TEXAS	14	WILLIAMSON
DWG:	CONT.	SECT.	JOB / HIGHWAY NO.
CHK. DWG:	0683	01	069 / SH 45

Pen Table: I:\Jobs\32058\TECHPROD\UTIL\Plots\32058utility.pen
Design Filename: I:\Jobs\32058\TECHPROD\UTIL\Dwg\PHS1\45wpp140.dgn

Scale: 40.000000:1.000000
Plotted on: 18-MAR-2003 10:17

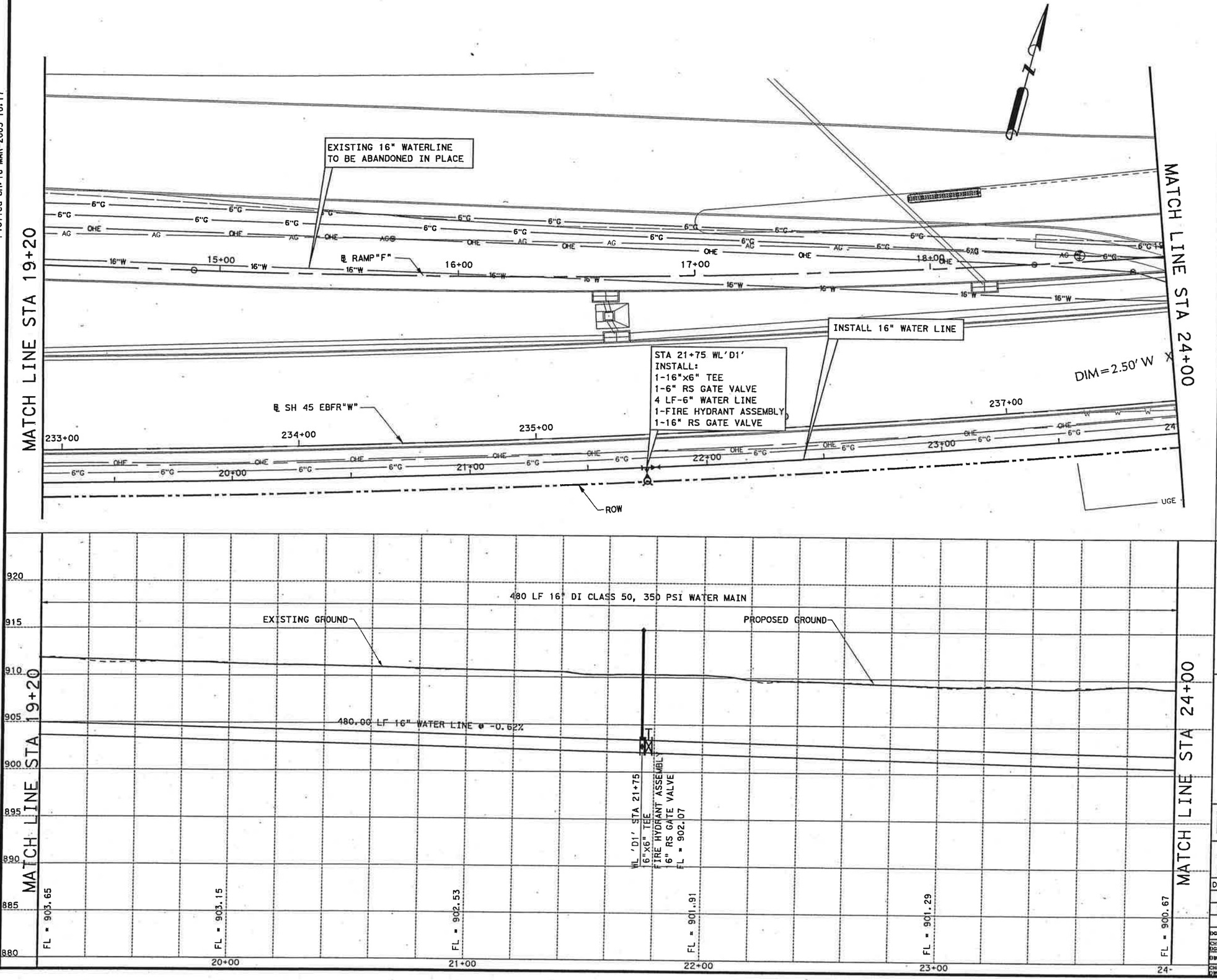

LEGEND

- WATER VALVE
- AIR RELEASE VALVE
- FIRE HYDRANT
- MANHOLE
- PROP WW MANHOLE
- CAP (BLIND FLANGE)
- PIPE REDUCER
- WATER VAULT
- FIRE PROTECTION SERVICE
- FUTURE WORK BY OTHERS
- 12"W — EXIST WATER LINE TO REMAIN IN SERVICE
- A12"W — EXIST WATER LINE TO BE ABANDONED
- 8"WW — EXIST WW LINE TO REMAIN IN SERVICE
- A12"SS — EXIST WW LINE TO BE ABANDONED
- UGT — EXIST TELEPHONE
- OHE — EXIST ELECTRIC LINE
- PROPOSED ROW
- PROP WATER LINE (SIZE AS SHOWN)
- PROP WW LN SIZE AS SHOWN
- PROP BORE PIT
- PROP ENCASEMENT PIPE AS SHOWN
- PROP ENCASEMENT BY OTHER THAN OPEN CUT AS SHOWN
- PROP PROFILE ENCASEMENT

STATE OF TEXAS
JOHN W. STRYBOS
64259
LICENSED PROFESSIONAL ENGINEER

3/19/2003

WATER LINE "D1" PLAN & PROFILE

SH45

SH 45 / US 183 INTERCHANGE

SCALE: PLAN 1":40'
PROFILE 1":10'

HNTB ARCHITECTS ENGINEERS PLANNERS
The HNTB Companies

Texas Department of Transportation
© 2003 TEXAS TURNPIKE AUTHORITY DIVISION

DRAWING PREPARED BY: HNTB CORPORATION		CITY OF AUSTIN SHEET NO.
SHEET 5 OF 7		A-53
FED. RD. DIV. NO.	FEDERAL AID PROJECT NO.	SHEET NO.
6	MG 2002 (243)	774

DGN:	STATE	DIST.	COUNTY
CHK DGN:	TEXAS	14	WILLIAMSON
DWG:	CONT.	SECT.	JOB / HIGHWAY NO.
CHK DWG:	0683	01	069 / SH 45

Pen Table: I:\Jobs\32058\TECHPROD\Util\Plots\32058utility.pen
Design Filename: I:\Jobs\32058\TECHPROD\UTIL\Dwg\PHS1\45wpp14E.dgn

Scale: 40.000005:1.000000
Plotted on: 18-MAR-2003 10:17

MATCH LINE STA 24+00

MATCH LINE STA 28+80

STA 25+38 WL'D1' INSTALL: 1-16"x16" TEE 2-16" RS GATE VALVE 1-16" PLUG (NORTH) CONN TO EXISTING 16" WATER LINE (SOUTH)

STA 25+48 WL'D1' INSTALL: 1-16"x6" TEE 1-6" RS GATE VALVE 1-FIRE HYDRANT ASSEMBLY 6 LF-6" WATERLINE

℄ RAMP"F"

EXISTING 16" WATER LINE TO BE ABANDONED IN PLACE

STA 24+25 WL'D1' BEGIN 24" STEEL ENCASEMENT

STA 25+25 WL'D1 END 24" STEEL ENCASEMENT

STA 25+92 WL'D1' BEGIN 24" STEEL ENCASEMENT

STA 26+50 WL'D1' END 24" STEEL ENCASEMENT

INSTALL 16" WATER LINE

℄ SH 45 EBFR"W"

238+00 239+00 240+00 241+00 242+00

22+00 23+00 25+00 26+00 27+00 28+00

ROW

UGE

10'x 20' BORE PIT

10'x 20' BORE PIT

10'x 20' BORE PIT

BRIARWICK DR

REMOVE EXISTING FIRE HYDRANT AND VALVE

6' TYP

480 LF 16" DI CLASS 50, 350 PSI WATER MAIN

EXISTING GROUND

PROPOSED GROUND

52.00 LF 16" WATER LINE @ -0.62%

86.00 LF 16" WATER LINE @ 1.64%

342.00 LF 16" WATER LINE @ -0.40%

WL 'D1' STA 24+52 GRADE BREAK FL = 900.34

WL 'D1' STA 24+52.19 PROP 18" STORMSEWER FL = 904.80

WL 'D1' STA 24+75 BEGIN ENCASEMENT FL = 900.72

50 LF 24" STEEL ENCASEMENT SCH 80 BY OTHER THAN OPEN CUT

WL 'D1' STA 25+25 END ENCASEMENT FL = 901.54

WL 'D1' STA 25+38 GRADE BREAK 16" X 16" TEE 16" RS GATE VALVE FL = 901.75

WL 'D1' STA 25+48 16"X6" TEE FIRE HYDRANT ASSEMBLY FL = 901.70

WL 'D1' STA 25+92 BEGIN ENCASEMENT FL = 901.52

58 LF 24" STEEL ENCASEMENT SCH 80 BY OTHER THAN OPEN CUT

WL 'D1' STA 26+50 END ENCASEMENT FL = 901.30

FL = 900.67

FL = 901.10

FL =900.70

FL =900.38

920 915 910 905 900 895 890 885 880

LEGEND

- WATER VALVE
- AIR RELEASE VALVE
- FIRE HYDRANT
- MANHOLE
- PROP WW MANHOLE
- CAP (BLIND FLANGE)
- PIPE REDUCER
- WATER VAULT
- FIRE PROTECTION SERVICE
- FUTURE WORK BY OTHERS
- 12"W — EXIST WATER LINE TO REMAIN IN SERVICE
- A12"W — EXIST WATER LINE TO BE ABANDONED
- 8"WW — EXIST WW LINE TO REMAIN IN SERVICE
- A12"SS — EXIST WW LINE TO BE ABANDONED
- UGT — EXIST TELEPHONE
- OHE — EXIST ELECTRIC LINE
- PROPOSED ROW
- PROP WATER LINE (SIZE AS SHOWN)
- PROP WW LN SIZE AS SHOWN
- PROP BORE PIT
- PROP ENCASEMENT PIPE AS SHOWN
- PROP ENCASEMENT BY OTHER THAN OPEN CUT AS SHOWN
- PROP PROFILE ENCASEMENT

STATE OF TEXAS
JOHN W. STRYBOS
64259
LICENSED PROFESSIONAL ENGINEER

3/19/2003

WATER LINE "D1" PLAN & PROFILE

SH45

SH 45 / US 183 INTERCHANGE

SCALE: PLAN 1":40'
PROFILE 1":10'

HNTB ARCHITECTS ENGINEERS PLANNERS
The HNTB Companies

Texas Department of Transportation

© 2003 TEXAS TURNPIKE AUTHORITY DIVISION

DRAWING PREPARED BY: HNTB CORPORATION			CITY OF AUSTIN SHEET NO.
SHEET 6 OF 7			A-54
FED. RD. DIV. NO.	FEDERAL AID PROJECT NO.		SHEET NO.
6	MG 2002 (243)		775
DGN:	STATE	DIST.	COUNTY
CHK DGN:	TEXAS	14	WILLIAMSON
DWG:	CONT.	SECT.	JOB / HIGHWAY NO.
CHK DWG:	0683	01	069 SH 45

Pen Tables: \Jobs\32058\TECHPROD\UTIL\Plots\32058utility.pen
Design Filename: I:\Jobs\32058\TECHPROD\UTIL\Dwg\PHS1\45wppl4F.dgn

Scale: 40.000005:1.000000
Plotted on: 18-MAR-2003 10:17

Pen Table: I:\Jobs\32058\TECHPROD\UTIL\Plots\32058utility.pen
Design Filename: I:\Jobs\32058\TECHPROD\UTIL\Dwg\PHS1\45wppl4G.dgn

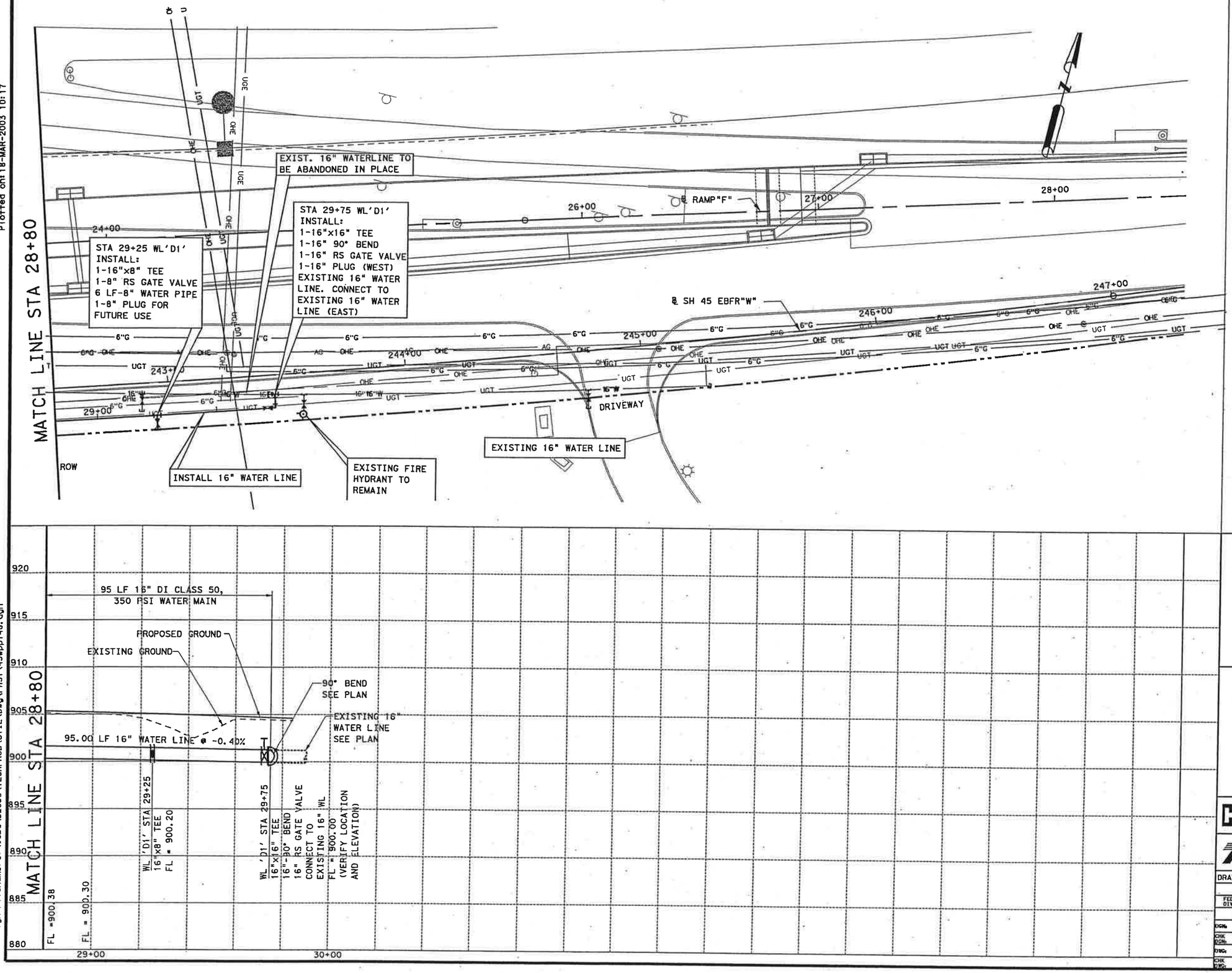

LEGEND

- WATER VALVE
- AIR RELEASE VALVE
- FIRE HYDRANT
- MANHOLE
- PROP WW MANHOLE
- CAP (BLIND FLANGE)
- PIPE REDUCER
- WATER VAULT
- FIRE PROTECTION SERVICE
- FUTURE WORK BY OTHERS
- 12"W — EXIST WATER LINE TO REMAIN IN SERVICE
- A12"W — EXIST WATER LINE TO BE ABANDONED
- 8"WW — EXIST WW LINE TO REMAIN IN SERVICE
- A12"SS — EXIST WW LINE TO BE ABANDONED
- UGT — EXIST TELEPHONE
- OHE — EXIST ELECTRIC LINE
- PROPOSED ROW
- PROP WATER LINE (SIZE AS SHOWN)
- PROP WW LN SIZE AS SHOWN
- PROP BORE PIT
- PROP ENCASEMENT PIPE AS SHOWN
- PROP ENCASEMENT BY OTHER THAN OPEN CUT AS SHOWN
- PROP PROFILE ENCASEMENT

STATE OF TEXAS
JOHN W. STRYBOS
64259
LICENSED PROFESSIONAL ENGINEER

3/19/2003

WATER LINE "D1" PLAN & PROFILE

SH45

SH 45 / US 183 INTERCHANGE

SCALE: PLAN 1":40'
PROFILE 1":10'

HNTB ARCHITECTS ENGINEERS PLANNERS
The HNTB Companies

Texas Department of Transportation
© 2003 TEXAS TURNPIKE AUTHORITY DIVISION

DRAWING PREPARED BY: HNTB CORPORATION				CITY OF AUSTIN SHEET NO.
SHEET 7 OF 7				A-55
FED. RD. DIV. NO.	FEDERAL AID PROJECT NO.			SHEET NO.
6	MG 2002 (243)			776
DGN:	STATE	DIST.	COUNTY	
CHK DGN:	TEXAS	14	WILLIAMSON	
DWG:	CONT.	SECT.	JOB	HIGHWAY NO.
CHK DWG:	0683	01	069	SH 45

Scale= 40.0000221.000000
Plotted on: 18-MAR-2003 10:16

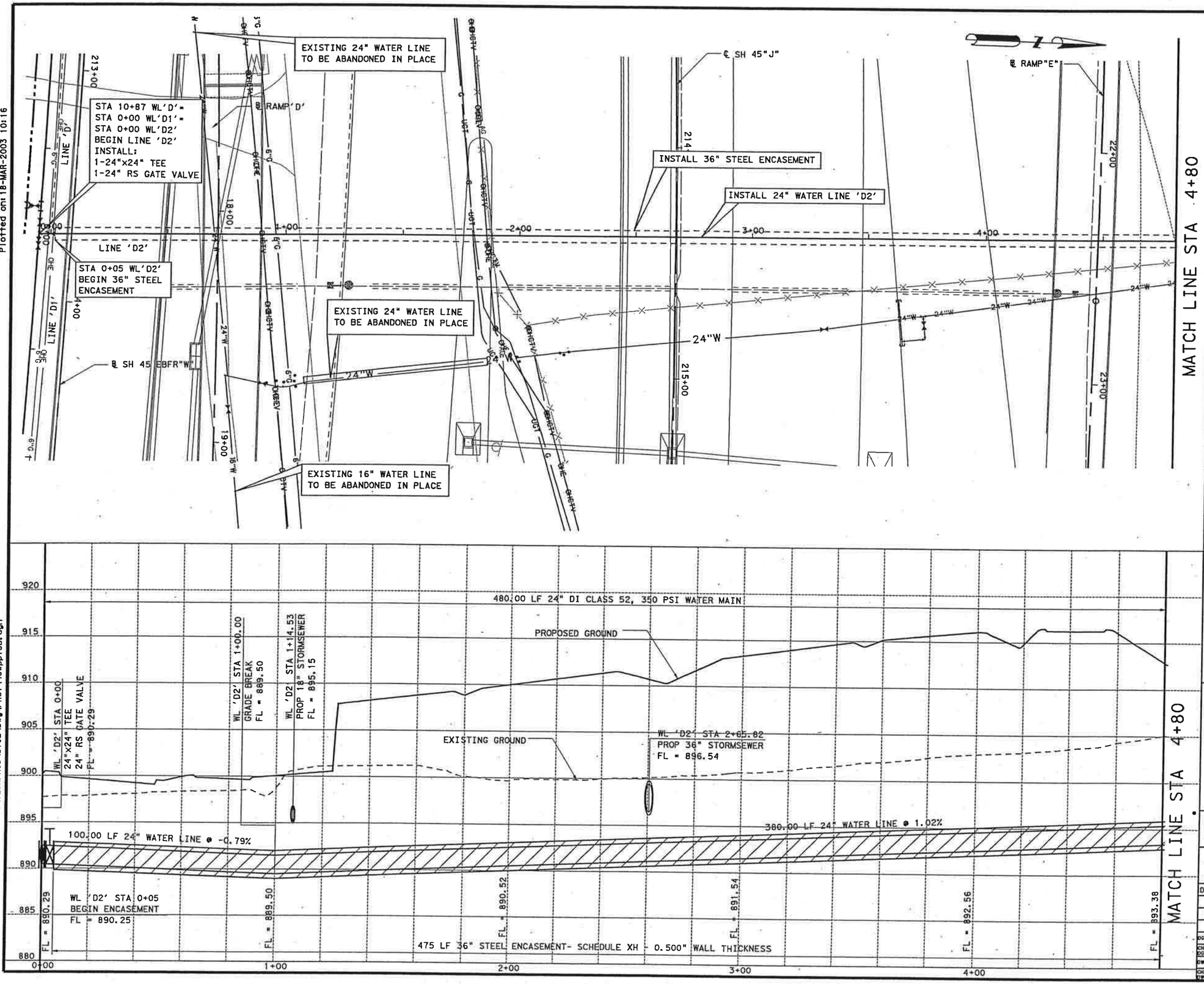

LEGEND

- WATER VALVE
- AIR RELEASE VALVE
- FIRE HYDRANT
- MANHOLE
- PROP WW MANHOLE
- CAP (BLIND FLANGE)
- PIPE REDUCER
- WATER VAULT
- FIRE PROTECTION SERVICE
- FUTURE WORK BY OTHERS
- 12"W — EXIST WATER LINE TO REMAIN IN SERVICE
- A12"W — EXIST WATER LINE TO BE ABANDONED
- 8"WW — EXIST WW LINE TO REMAIN IN SERVICE
- A12"SS — EXIST WW LINE TO BE ABANDONED
- UGT — EXIST TELEPHONE
- OHE — EXIST ELECTRIC LINE
- PROPOSED ROW
- PROP WATER LINE (SIZE AS SHOWN)
- PROP WW LN SIZE AS SHOWN
- PROP BORE PIT
- PROP ENCASEMENT PIPE AS SHOWN
- PROP ENCASEMENT BY OTHER THAN OPEN CUT AS SHOWN
- PROP PROFILE ENCASEMENT

STATE OF TEXAS
JOHN W. STRYBOS
64259
LICENSED PROFESSIONAL ENGINEER

3/19/2003

WATER LINE "D2" PLAN & PROFILE SH45

SH 45 / US 183 INTERCHANGE

SCALE: PLAN 1":40'
PROFILE 1":10'

HNTB ARCHITECTS ENGINEERS PLANNERS
The HNTB Companies

Texas Department of Transportation
© 2003 TEXAS TURNPIKE AUTHORITY DIVISION

DRAWING PREPARED BY: HNTB CORPORATION		CITY OF AUSTIN SHEET NO.
SHEET 1 OF 2		A-56
FED. RD. DIV. NO.	FEDERAL AID PROJECT NO.	SHEET NO.
6	MG 2002 (243)	777

	STATE	DIST.	COUNTY
CHK DSN:	TEXAS	14	WILLIAMSON
DWN:	CONT.	SECT.	JOB / HIGHWAY NO.
CHK QTY:	0683	01	069 / SH 45

Pen Table: I:\Jobs\32058\TECHPROD\UTIL\Plots\32058utility.pen
Design Filename: I:\Jobs\32058\TECHPROD\UTIL\Dwg\PHS1\45wppl3B.dgn

Scale: 40.0000001:1.000000
Plotted on: 18-MAR-2003 10:16

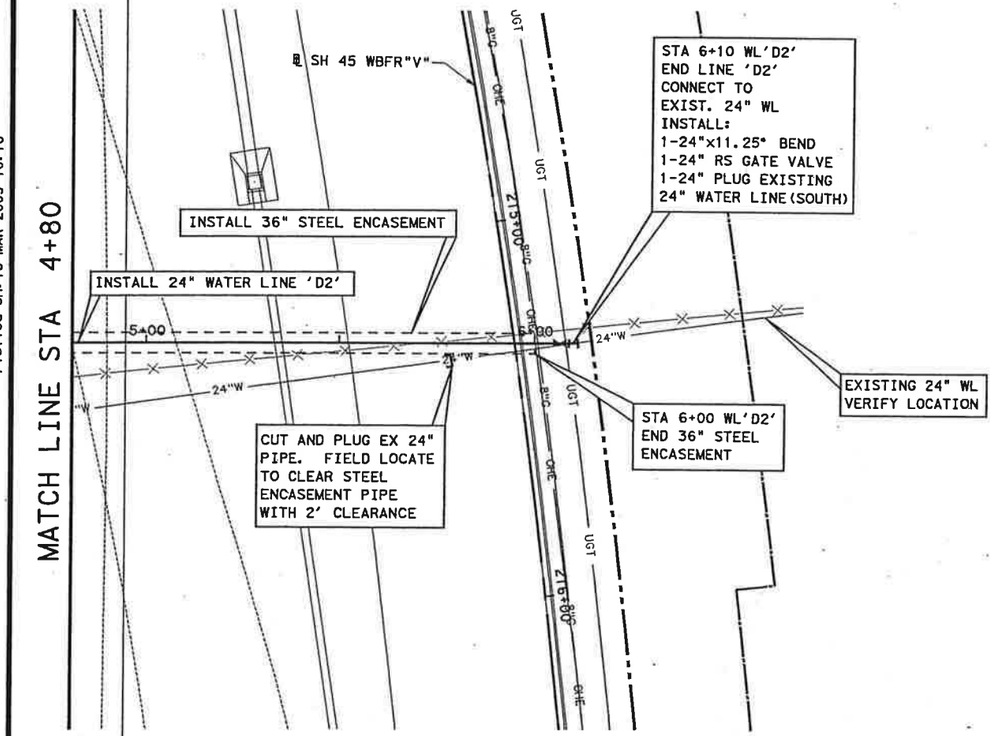

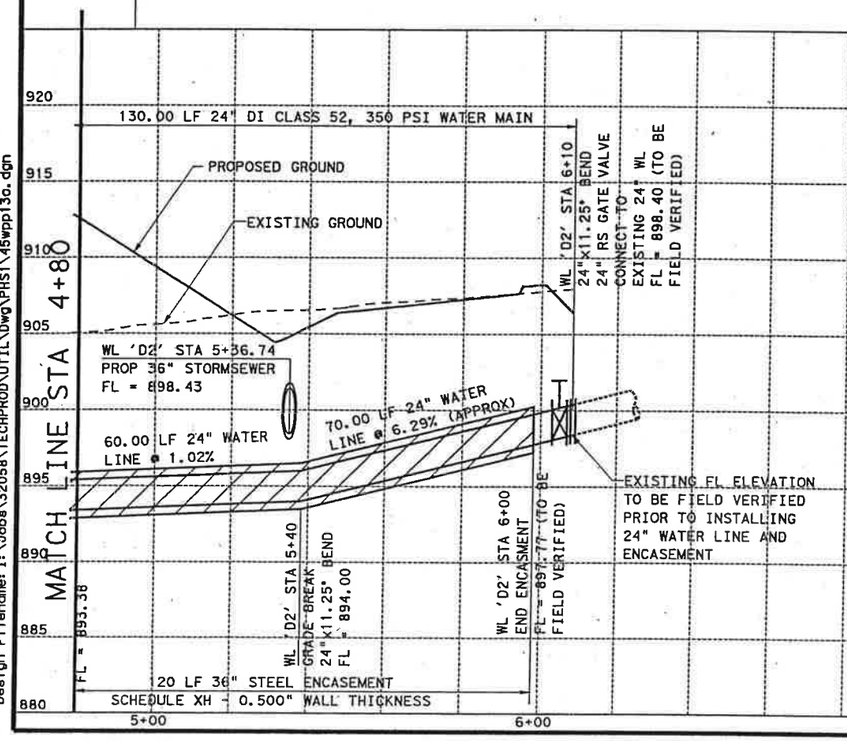

LEGEND

- WATER VALVE
- AIR RELEASE VALVE
- FIRE HYDRANT
- MANHOLE
- PROP WW MANHOLE
- CAP (BLIND FLANGE)
- PIPE REDUCER
- WATER VAULT
- FIRE PROTECTION SERVICE
- FUTURE WORK BY OTHERS
- 12"W — EXIST WATER LINE TO REMAIN IN SERVICE
- A12"W — EXIST WATER LINE TO BE ABANDONED
- 8"WW — EXIST WW LINE TO REMAIN IN SERVICE
- A12"SS — EXIST WW LINE TO BE ABANDONED
- UGT — EXIST TELEPHONE
- OHE — EXIST ELECTRIC LINE
- PROPOSED ROW
- PROP WATER LINE (SIZE AS SHOWN)
- PROP WW LN SIZE AS SHOWN
- PROP BORE PIT
- PROP ENCASEMENT PIPE AS SHOWN
- PROP ENCASEMENT BY OTHER THAN OPEN CUT AS SHOWN
- PROP PROFILE ENCASEMENT

STATE OF TEXAS
JOHN W. STRYBOS
64259
LICENSED
PROFESSIONAL ENGINEER

3/19/2003

WATER LINE "D2" PLAN & PROFILE SH45

SH 45 / US 183 INTERCHANGE

SCALE: PLAN 1":40'
PROFILE 1":10'

HNTB ARCHITECTS ENGINEERS PLANNERS
The HNTB Companies

Texas Department of Transportation
© 2003 TEXAS TURNPIKE AUTHORITY DIVISION

DRAWING PREPARED BY: HNTB CORPORATION			CITY OF AUSTIN SHEET NO.
SHEET 2 OF 2			A-57
FED. RD. DIV. NO.	FEDERAL AID PROJECT NO.		SHEET NO.
6	MG 2002 (243)		778
DGN:	STATE	DIST.	COUNTY
CHK DGN:	TEXAS	14	WILLIAMSON
DWG:	CONT.	SECT.	JOB / HIGHWAY NO.
CHK DWG:	0683	01	069 / SH 45

Pen Tables: I:\Jobs\32058\TECHPROD\UTIL\Plots\32058utility.pen
Design Filename: I:\Jobs\32058\TECHPROD\UTIL\DWG\PHS1\45wpp13a.dgn

Scale: 40.000008:1.000000
Plotted on: 18-APR-2003 11:36

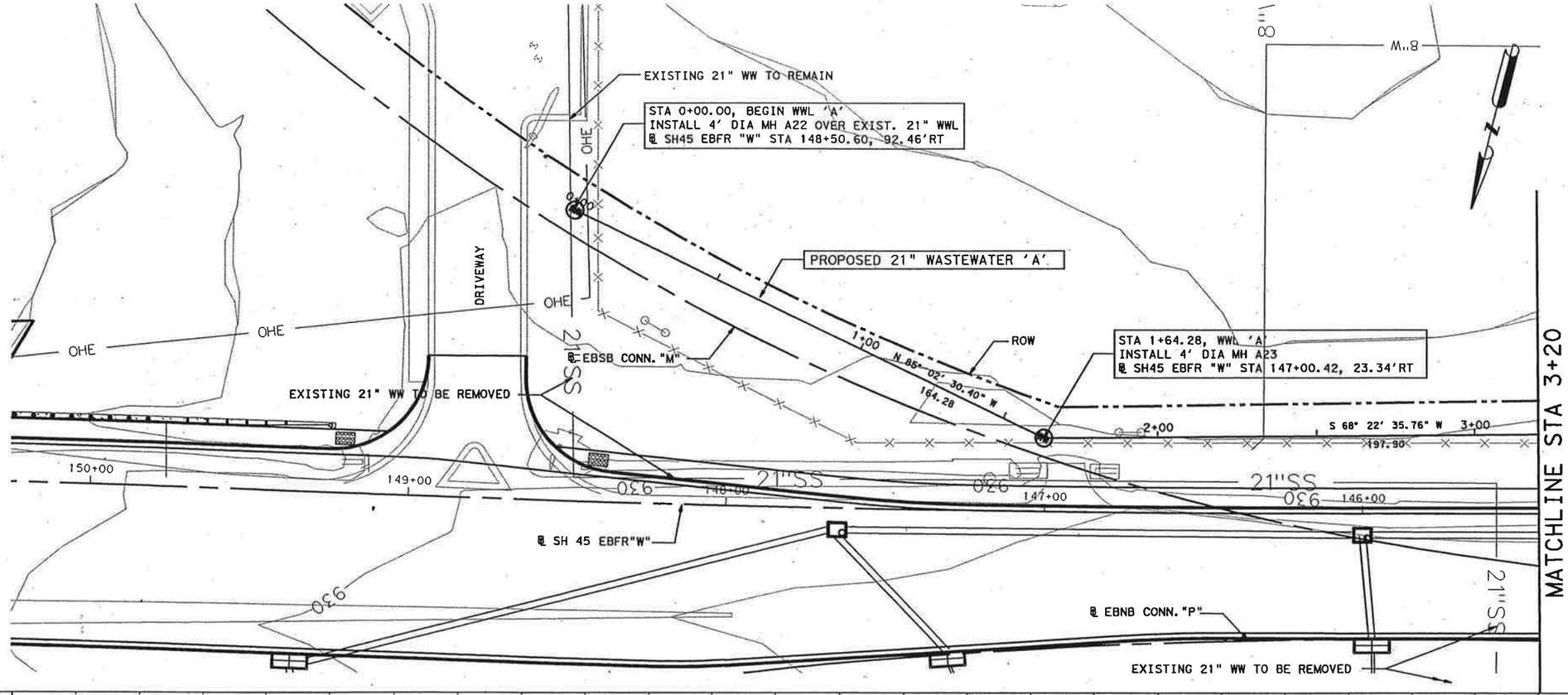

LEGEND

- WATER VALVE
- AIR RELEASE VALVE
- FIRE HYDRANT
- MANHOLE
- PROP WW MANHOLE
- CAP (BLIND FLANGE)
- PIPE REDUCER
- WATER VAULT
- FIRE PROTECTION SERVICE
- FUTURE WORK BY OTHERS
- 12"W — EXIST WATER LINE TO REMAIN IN SERVICE
- A12"W — EXIST WATER LINE TO BE ABANDONED
- 8"WW — EXIST WW LINE TO REMAIN IN SERVICE
- A12"SS — EXIST WW LINE TO BE ABANDONED
- UGT — EXIST TELEPHONE
- OHE — EXIST ELECTRIC LINE
- PROPOSED ROW
- PROP WATER LINE (SIZE AS SHOWN)
- PROP WW LN SIZE AS SHOWN
- PROP BORE PIT
- PROP ENCASEMENT PIPE AS SHOWN
- PROP ENCASEMENT BY OTHER THAN OPEN CUT AS SHOWN
- PROP PROFILE ENCASEMENT

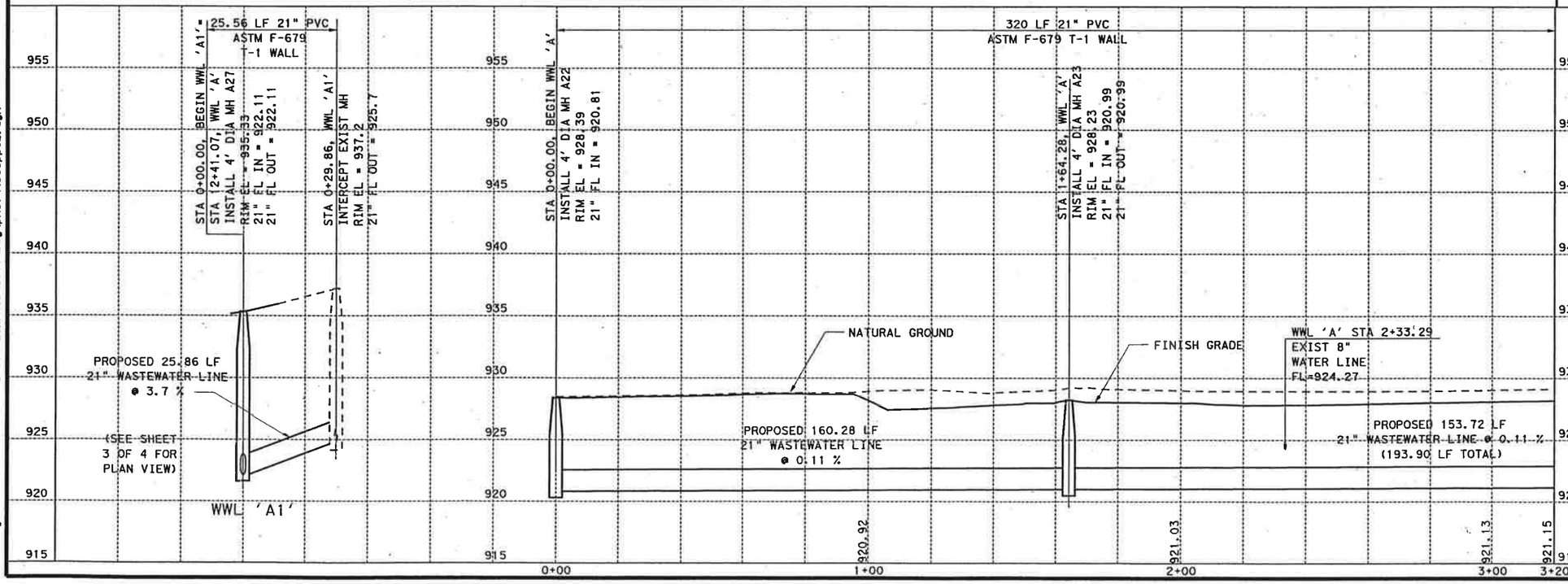

STATE OF TEXAS
JOHN W. STRYBOS
64259
LICENSED
PROFESSIONAL ENGINEER

4-18-2003

WASTEWATER LINE "A" PLAN & PROFILE

SH45

SH 45 / US 183 INTERCHANGE

SCALE: PLAN 1":40'
PROFILE 1":10'

HNTB ARCHITECTS ENGINEERS PLANNERS
The HNTB Companies

Texas Department of Transportation

© 2003 TEXAS TURNPIKE AUTHORITY DIVISION

DRAWING PREPARED BY: HNTB CORPORATION		CITY OF AUSTIN SHEET NO.
SHEET 1 OF 4		A-58
FED. RD. DIV. NO.	FEDERAL AID PROJECT NO.	SHEET NO.
6	MG 2002 (243)	779

DGN:	STATE	DIST.	COUNTY
CHK DGN:	TEXAS	14	WILLIAMSON
DWG:	CONT.	SECT.	JOB	HIGHWAY NO.
CHK DWG:	0683	01	069	SH 45

Pen Table: I:\Jobs\32058\TechProd\UTIL\plots\32058uh.pen
Design Filename: I:\Jobs\32058\TECHPROD\Util\Dwg\phs1\45sspp02.dgn

Scale: 40.000000:1.000000
Plotted on: 18-APR-2003 11:37

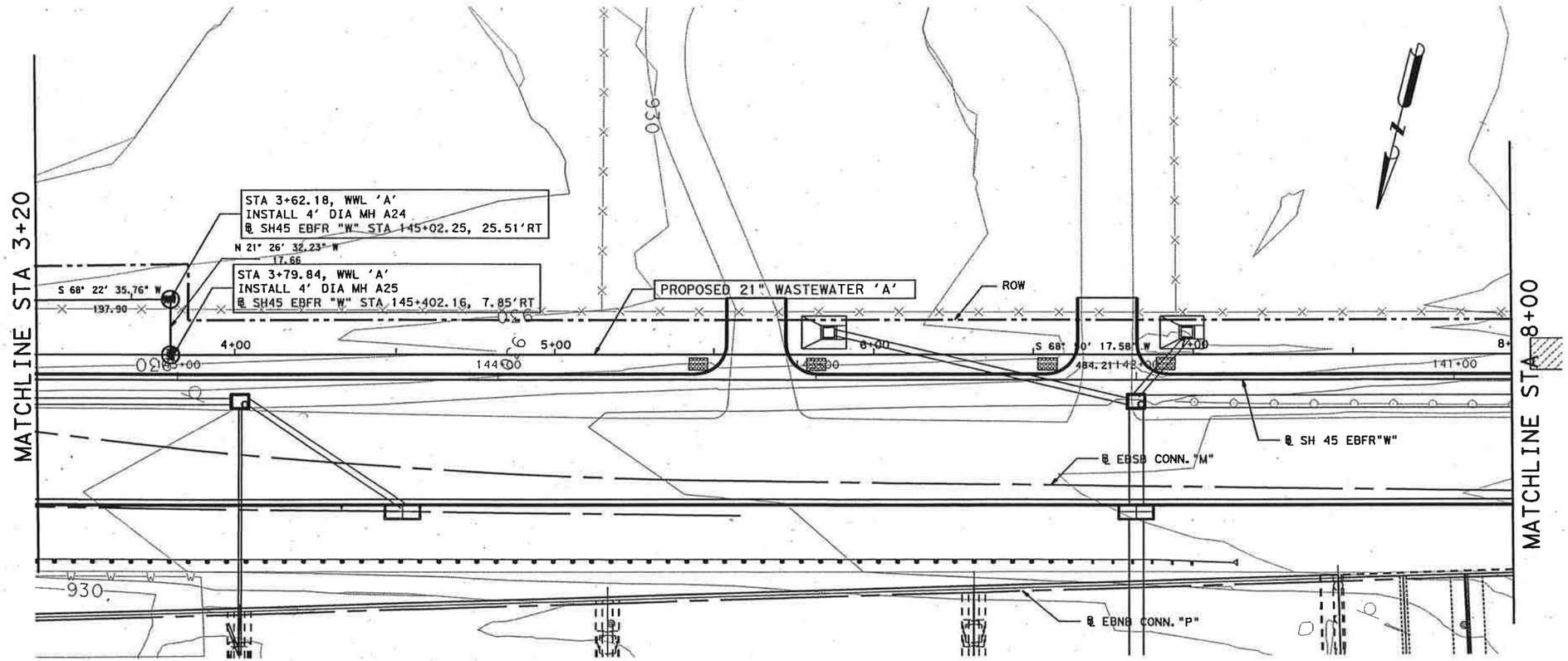

LEGEND

- WATER VALVE
- AIR RELEASE VALVE
- FIRE HYDRANT
- MANHOLE
- PROP WW MANHOLE
- CAP (BLIND FLANGE)
- PIPE REDUCER
- WATER VAULT
- FIRE PROTECTION SERVICE
- FUTURE WORK BY OTHERS
- 12"W — EXIST WATER LINE TO REMAIN IN SERVICE
- A12"W — EXIST WATER LINE TO BE ABANDONED
- 8"WW — EXIST WW LINE TO REMAIN IN SERVICE
- A12"SS — EXIST WW LINE TO BE ABANDONED
- UGT — EXIST TELEPHONE
- OHE — EXIST ELECTRIC LINE
- PROPOSED ROW
- PROP WATER LINE (SIZE AS SHOWN)
- PROP WW LN SIZE AS SHOWN
- PROP BORE PIT
- PROP ENCASEMENT PIPE AS SHOWN
- PROP ENCASEMENT BY OTHER THAN OPEN CUT AS SHOWN
- PROP PROFILE ENCASEMENT

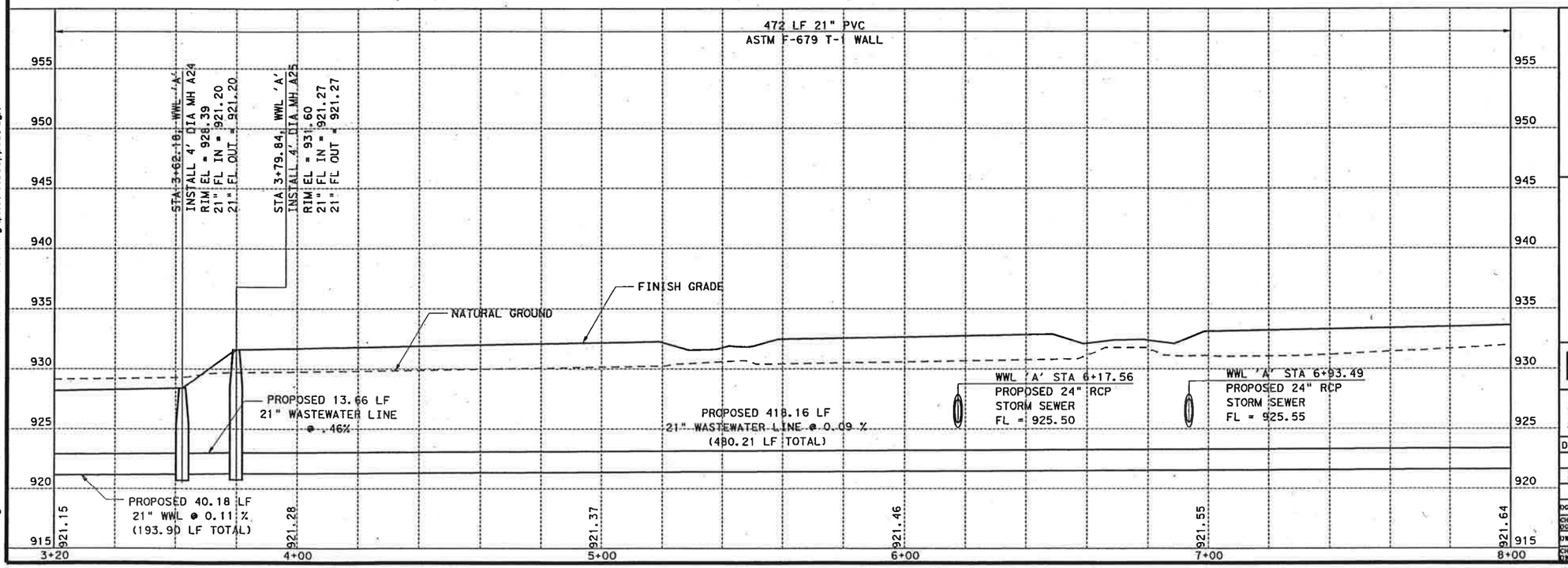

Pen Table: I:\Jobs\32058\TechProd\UTIL\plots\32058Un.pen
Design Filename: I:\Jobs\32058\TECHPROD\Util\Dwg\phs1\45eppp03.dgn

JOHN W. STRYBOS 64259 LICENSED PROFESSIONAL ENGINEER
STATE OF TEXAS
4-18-2003

WASTEWATER LINE "A" PLAN & PROFILE

SH45

SH 45 / US 183 INTERCHANGE

SCALE: PLAN 1":40'
PROFILE 1":10'

HNTB ARCHITECTS ENGINEERS PLANNERS
The HNTB Companies

Texas Department of Transportation
© 2003 TEXAS TURNPIKE AUTHORITY DIVISION

DRAWING PREPARED BY: HNTB CORPORATION.		CITY OF AUSTIN SHEET NO.
SHEET 2 OF 4		A-59
FED. RD. DIV. NO.	FEDERAL AID PROJECT NO.	SHEET NO.
6	MG 2002 (243)	780

DGN:	STATE	DIST.	COUNTY
CHK DGN:	TEXAS	14	WILLIAMSON
DWG:	CONT.	SECT.	JOB / HIGHWAY NO.
CHK DWG:	0683	01	069 / SH 45

Scale= 40.000005:1.000000
Plotted on: 18-APR-2003 11:37

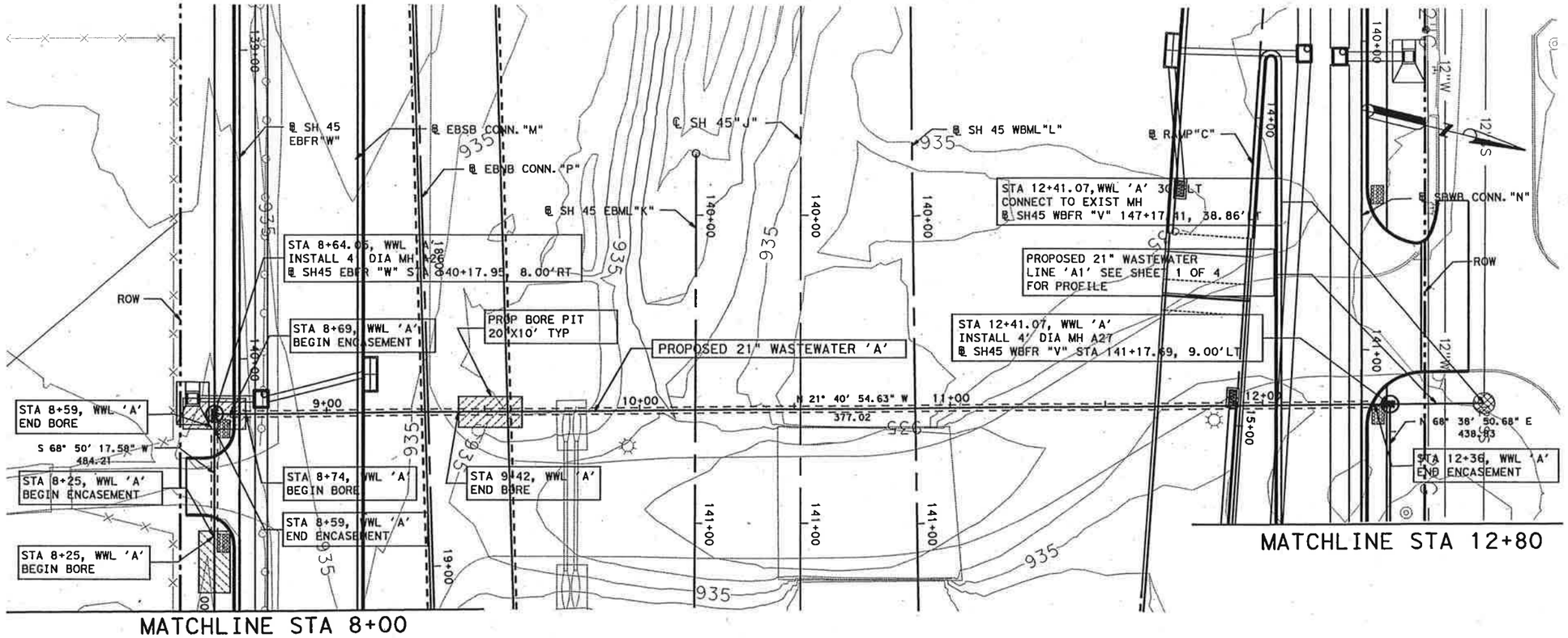

LEGEND

- WATER VALVE
- AIR RELEASE VALVE
- FIRE HYDRANT
- MANHOLE
- PROP WW MANHOLE
- CAP (BLIND FLANGE)
- PIPE REDUCER
- WATER VAULT
- FIRE PROTECTION SERVICE
- FUTURE WORK BY OTHERS
- 12"W — EXIST WATER LINE TO REMAIN IN SERVICE
- A12"W — EXIST WATER LINE TO BE ABANDONED
- 8"WW — EXIST WW LINE TO REMAIN IN SERVICE
- A12"SS — EXIST WW LINE TO BE ABANDONED
- UGT — EXIST TELEPHONE
- OHE — EXIST ELECTRIC LINE
- PROPOSED ROW
- PROP WATER LINE (SIZE AS SHOWN)
- PROP WW LN SIZE AS SHOWN
- PROP BORE PIT
- PROP ENCASEMENT PIPE AS SHOWN
- PROP ENCASEMENT BY OTHER THAN OPEN CUT AS SHOWN
- PROP PROFILE ENCASEMENT

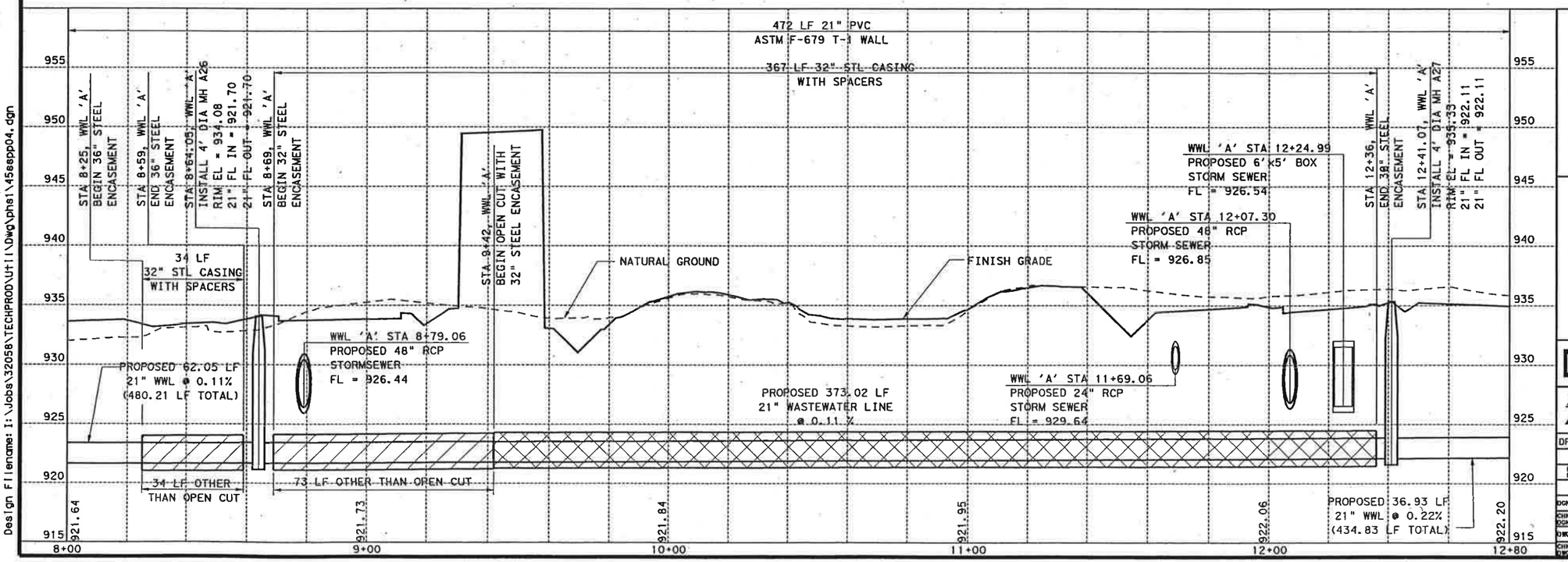

JOHN W. STRYBOS 64259 LICENSED PROFESSIONAL ENGINEER
STATE OF TEXAS
4-18-2003

WASTEWATER LINE "A" PLAN & PROFILE

SH45

SH 45 / US 183 INTERCHANGE

SCALE: PLAN 1":40'
PROFILE 1":10'

HNTB ARCHITECTS ENGINEERS PLANNERS
The HNTB Companies

Texas Department of Transportation
© 2003 TEXAS TURNPIKE AUTHORITY DIVISION

DRAWING PREPARED BY: HNTB CORPORATION			CITY OF AUSTIN SHEET NO.
SHEET 3 OF 4			A-60
FED. RD. DIV. NO.	FEDERAL AID PROJECT NO.		SHEET NO.
6	MG 2002 (243)		781

DGN:	STATE	DIST.	COUNTY
CHK DGN:	TEXAS	14	WILLIAMSON
DWG:	CONT.	SECT.	JOB	HIGHWAY NO.
CHK DWG:	0683	01	069	SH 45

Pen Tablet: \Jobs\32058\techprod\UTIL\plots\32058Uh.pen
Design Filename: I:\Jobs\32058\TECHPROD\UTIL\Dwg\phs1\45sepp04.dgn

Scale: 40.000005:1.000000
Plotted on: 18-APR-2003 11:37

MATCHLINE STA 12+80

EXISTING 21" WW TO REMAIN

STA 17+06.59, END WWL 'A'
INSTALL 4' DIA MH A28
℄ SH45 WBFR "V" STA 145+56.43, 37.28' LT

STA 16+79.90, WWL 'A'
INSTALL 4' DIA MH A29
℄ SH45 WBFR "V" STA 145+56.52, 10.60'LT

N 21° 21' 09.32" W
26.68

PROPOSED 21" WASTEWATER 'A'

ROW

N 68° 38' 50.68" E
438.83

℄ SH45 WBFR "V"

EXISTING 21" WW TO BE REMOVED

℄ SBWB CONN. "N"

℄ NBWB CONN. "O"

℄ RAMP "C"

12"SS 12"W 2"G 935 13+00 14+00 15+00 16+00 142+00 143+00 144+00 145+00 146+00 16+00 17+00 18+00 19+00 20+00 21"SS

LEGEND

- WATER VALVE
- AIR RELEASE VALVE
- FIRE HYDRANT
- MANHOLE
- PROP WW MANHOLE
- CAP (BLIND FLANGE)
- PIPE REDUCER
- WATER VAULT
- FIRE PROTECTION SERVICE
- FUTURE WORK BY OTHERS
- 12"W — EXIST WATER LINE TO REMAIN IN SERVICE
- A12"W — EXIST WATER LINE TO BE ABANDONED
- 8"WW — EXIST WW LINE TO REMAIN IN SERVICE
- A12"SS — EXIST WW LINE TO BE ABANDONED
- UGT — EXIST TELEPHONE
- OHE — EXIST ELECTRIC LINE
- PROPOSED ROW
- PROP WATER LINE (SIZE AS SHOWN)
- PROP WW LN SIZE AS SHOWN
- PROP BORE PIT
- PROP ENCASEMENT PIPE AS SHOWN
- PROP ENCASEMENT BY OTHER THAN OPEN CUT AS SHOWN
- PROP PROFILE ENCASEMENT

STATE OF TEXAS
JOHN W. STRYBOS
64259
LICENSED PROFESSIONAL ENGINEER

4-18-2003

420.58 LF 21" PVC
ASTM F-679 T-1 WALL

STA 16+79.90, WWL 'A'
INSTALL 4' DIA MH A28
RIM EL = 932.35
21" FL IN = 923.08
21" FL OUT = 923.08

STA 17+06.59, END WWL 'A'
INSTALL 4' DIA MH A29
RIM EL = 933.29
21" FL OUT = 924.84

NATURAL GROUND

FINISH GRADE

PROPOSED 397.90 LF
21" WWL @ 0.22%
(434.83 LF TOTAL)

WWL 'A' STA 16+90.86
EXIST 4" GAS
FL = 933.2

WWL 'A' STA 16+96.01
EXIST 12" WATER
FL = 933.6

PROPOSED 22.68 LF
21" WASTEWATER LINE
@ 7.75 %

955 950 945 940 935 930 925 920 915
922.20 922.24 922.46 922.68 922.91 924.48
12+80 13+00 14+00 15+00 16+00 17+00 17+60

WASTEWATER LINE "A" PLAN & PROFILE

SH45

SH 45 / US 183 INTERCHANGE

SCALE: PLAN 1":40'
PROFILE 1":10'

HNTB ARCHITECTS ENGINEERS PLANNERS
The HNTB Companies

Texas Department of Transportation
© 2003 TEXAS TURNPIKE AUTHORITY DIVISION

DRAWING PREPARED BY: HNTB CORPORATION				CITY OF AUSTIN SHEET NO.
SHEET 4 OF 4				A-61
FED. RD. DIV. NO.	FEDERAL AID PROJECT NO.			SHEET NO.
6	MG 2002 (243)			782
DGN:	STATE	DIST.	COUNTY	
CHK DSGN:	TEXAS	14	WILLIAMSON	
DWG:	CONT.	SECT.	JOB	HIGHWAY NO.
CHK DWG:	0683	01	069	SH 45

Pen Table: I:\Jobs\32058\techprod\UTIL\plots\32058Uh.pen
Design Filename: I:\Jobs\32058\TECHPROD\UTIL\Dwg\phs1\45sepp05.dgn

Scale: 20.000000:1.000000
Plotted on: 18-MAR-2003 10:18

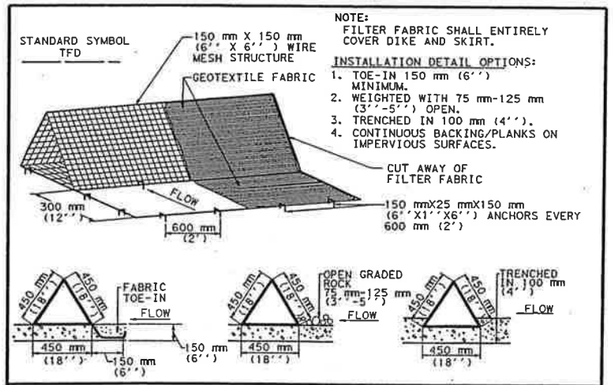

NOTE:
FILTER FABRIC SHALL ENTIRELY COVER DIKE AND SKIRT.

INSTALLATION DETAIL OPTIONS:
1. TOE-IN 150 mm (6'') MINIMUM.
2. WEIGHTED WITH 75 mm-125 mm (3''-5'') OPEN.
3. TRENCHED IN 100 mm (4'').
4. CONTINUOUS BACKING/PLANKS ON IMPERVIOUS SURFACES.

GENERAL NOTES
1. DIKES SHALL BE PLACED IN A ROW WITH ENDS TIGHTLY ABUTTING THE ADJACENT DIKE.
2. THE FABRIC COVER AND SKIRT SHALL BE A CONTINUOUS WRAPPING OF GEOTEXTILE. THE SKIRT SHALL BE A CONTINUOUS EXTENSION OF THE FABRIC ON THE UPSTREAM FACE.
3. THE SKIRT SHALL BE WEIGHTED WITH A CONTINUOUS LAYER OF 75-125 mm (3-5'') OPEN GRADED ROCK OR TOED-IN 150 mm (6'') WITH MECHANICALLY COMPACTED MATERIAL.. OTHERWISE, THE ENTIRE STRUCTURE SHALL BE TRENCHED IN 100 mm (4'').
4. DIKES AND SKIRT SHALL BE SECURELY ANCHORED IN PLACE USING 150 mm (6'') WIRE STAPLES ON 600 mm (2') CENTERS ON BOTH EDGES AND SKIRT, OR STAKE USING 10M (3/8'') DIAMETER RE-BAR WITH TEE ENDS.
5. FILTER MATERIAL SHALL BE LAPPED OVER ENDS 150 mm (6'') TO COVER DIKE TO DIKE JOINTS. JOINTS SHALL BE FASTENED WITH GALVANIZED SHOAT RINGS.
6. THE DIKE STRUCTURE SHALL BE MW40-150 mmX150 mm (6 GA. 6''X6'') WIRE MESH, 450 mm (18'') ON A SIDE.
7. INSPECTION SHALL BE MADE WEEKLY OR AFTER EACH RAINFALL EVENT AND REPAIR OR REPLACEMENT SHALL BE MADE PROMPTLY AS NEEDED BY THE CONTRACTOR.
8. ACCUMULATED SILT SHALL BE REMOVED WHEN IT REACHES A DEPTH OF 150 mm (6'') AND DISPOSED OF IN A MANNER WHICH WILL NOT CAUSE ADDITIONAL SILTATION.
9. AFTER THE DEVELOPMENT SITE IS COMPLETLY STABILIZED, THE DIKES AND ANY REMAINING SILT SHALL BE REMOVED. SILT SHALL BE DISPOSED OF AS INDICATED IN GENERAL NOTE 8 ABOVE.

CITY OF AUSTIN WATERSHED PROTECTION DEPARTMENT		TRIANGULAR SEDIMENT FILTER DIKE	
RECORD COPY SIGNED BY J. PATRICK MURPHY	3/27/00 ADOPTED	THE ARCHITECT/ENGINEER ASSUMES RESPONSIBILITY FOR APPROPRIATE USE OF THIS STANDARD.	STANDARD NO. 628S

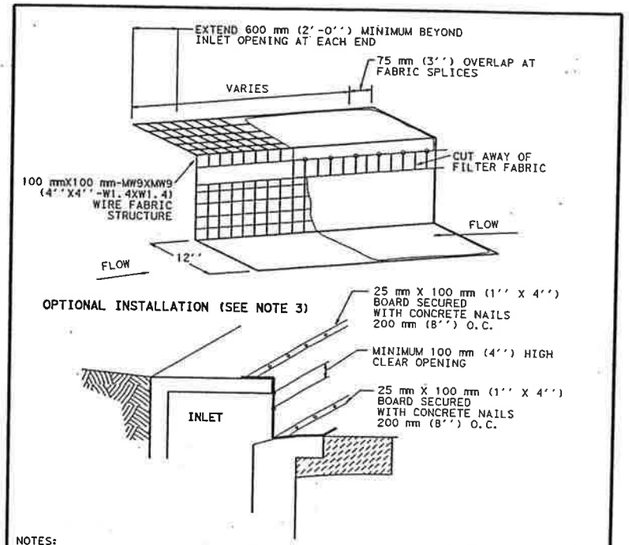

NOTES:
1. CONTRACTOR TO SECURE FILTER FABRIC WITH SANDBAGS LOCATED AT A MAXIMUM SPACING OF 1 m (3') ON CENTER.
2. A SECTION OF FILTER FABRIC SHALL BE REMOVED AS SHOWN ON THIS DETAIL OR AS DIRECTED BY THE ENGINEER OR DESIGNATED REPRESENTATIVE. FABRIC MUST BE SECURED TO WIRE BACKING WITH CLIPS OR HOG RINGS AT THIS LOCATION.
3. FOR LOCATIONS PRONE TO DAMAGE FROM TRAFFIC THE CONTRACTOR, UPON APPROVAL OF THE ENGINEER OR DESIGNATED REPRESENTATIVE, MAY USE THE OPTION OF SECURING THE FILTER FABRIC WITH A BOARD AND CONCRETE NAILS/RAMSET IN THE CONFIGURATION IDENTIFIED ON THIS DETAIL.

CITY OF AUSTIN WATERSHED PROTECTION DEPARTMENT		FILTER DIKE CURB INLET PROTECTION	
RECORD COPY SIGNED BY J. PATRICK MURPHY	3/27/00 ADOPTED	THE ARCHITECT/ENGINEER ASSUMES RESPONSIBILITY FOR APPROPRIATE USE OF THIS STANDARD.	STANDARD NO. 628S-2

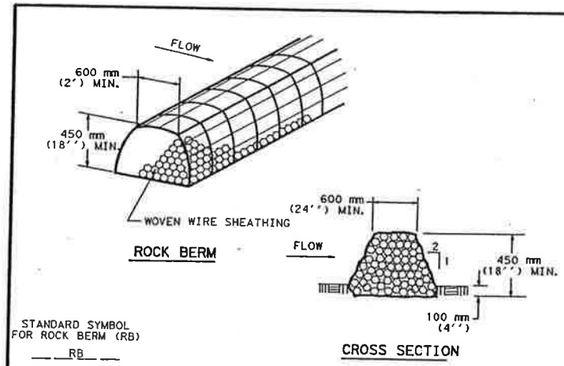

NOTES:
1. USE ONLY OPEN GRADED ROCK 100 to 200 mm (4 to 8'') DIAMETER FOR STREAM FLOW CONDITIONS. USE OPEN GRADED ROCK 75 to 125 mm (3 to 5'') DIAMETER FOR OTHER CONDITIONS.
2. THE ROCK BERM SHALL BE SECURED WITH A WOVEN WIRE SHEATHING HAVING MAXIMUM 25 mm (1'') OPENING AND MINIMUM WIRE DIAMETER OF 12.9 mm (20 GAUGE). ROCK BERMS IN CHANNEL APPLICATIONS SHALL BE ANCHORED FIRMLY INTO THE SUBSTRATE A MINIMUM OF 150 mm (6 '') WITH T-POSTS OR WITH 15M OR 20M (#5 OR #6) REBAR, WITH MAXIMUM SPACING APART OF 1.2 m (48'') ON CENTER.
3. THE ROCK BERM SHALL BE INSPECTED WEEKLY OR AFTER EACH RAIN, AND THE STONE AND/OR FABRIC CORE-WOVEN SHEATHING SHALL BE REPLACED WHEN THE STRUCTURE CEASES TO FUNCTION AS INTENDED, DUE TO SILT ACCUMULATION AMONG THE ROCKS, WASHOUT, CONSTRUCTION TRAFFIC DAMAGE, ETC.
4. WHEN SILT REACHES A DEPTH EQUAL TO ONE-THIRD THE HEIGHT OF THE BERM OR 150 mm (6''), WHICHEVER IS LESS, THE SILT SHALL BE REMOVED AND DISPOSED OF ON AN APPROVED SITE AND IN A MANNER THAT WILL NOT CREATE A SILTATION PROBLEM.
5. DAILY INSPECTION SHALL BE MADE ON SEVERE-SERVICE ROCK BERMS; SILT SHALL BE REMOVED WHEN ACCUMULATION REACHES 150 mm (6'').
6. WHEN THE SITE IS COMPLETELY STABILIZED, THE BERM AND ACCUMULATED SILT SHALL BE REMOVED AND DISPOSED OF IN AN APPROVED MANNER.

CITY OF AUSTIN WATERSHED PROTECTION DEPARTMENT		ROCK BERM	
RECORD COPY SIGNED BY J. PATRICK MURPHY	5/23/00 ADOPTED	THE ARCHITECT/ENGINEER ASSUMES RESPONSIBILITY FOR APPROPRIATE USE OF THIS STANDARD.	STANDARD NO. 639S-1

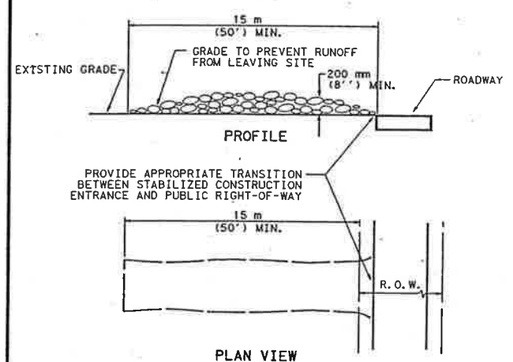

NOTES:
1. STONE SIZE: 75-125 mm (3-5'') OPEN GRADED ROCK.
2. LENGTH: AS EFFECTIVE BUT NOT LESS THAN 15 m (50').
3. THICKNESS: NOT LESS THAN 200 mm (8'').
4. WIDTH: NOT LESS THAN FULL WIDTH OF ALL POINTS OF INGRESS/EGRESS.
5. WASHING: WHEN NECESSARY, VEHICLE WHEELS SHALL BE CLEANED TO REMOVE SEDIMENT PRIOR TO ENTRANCE ONTO PUBLIC ROADWAY. WHEN WASHING IS REQUIRED, IT SHALL BE DONE ON AN AREA STABILIZED WITH CRUSHED STONE AND DRAINS INTO AN APPROVED TRAP OR SEDIMENT BASIN. ALL SEDIMENT SHALL BE PREVENTED FROM ENTERING ANY STORM DRAIN, DITCH OR WATERCOURSE USING APPROVED METHODS.
6. MAINTENANCE: THE ENTRANCE SHALL BE MAINTAINED IN A CONDITION THAT WILL PREVENT TRACKING OR FLOWING OF SEDIMENT ONTO PUBLIC ROADWAY. THIS MAY REQUIRE PERIODIC TOP DRESSING WITH ADDITIONAL STONE AS CONDITIONS DEMAND, AS WELL AS REPAIR AND CLEAN OUT OF ANY MEASURE DEVICES USED TO TRAP SEDIMENT. ALL SEDIMENTS THAT IS SPILLED, DROPPED, WASHED OR TRACKED ONTO PUBLIC ROADWAY MUST BE REMOVED IMMEDIATELY.
7. DRAINAGE: ENTRANCE MUST BE PROPERLY GRADED OR INCORPORATE A DRAINAGE SWALE TO PREVENT RUNOFF FROM LEAVING THE CONSTRUCTION SITE.

CITY OF AUSTIN WATERSHED PROTECTION DEPARTMENT		STABILIZED CONSTRUCTION ENTRANCE	
RECORD COPY SIGNED BY J. PATRICK MURPHY	5/23/00 ADOPTED	THE ARCHITECT/ENGINEER ASSUMES RESPONSIBILITY FOR APPROPRIATE USE OF THIS STANDARD.	STANDARD NO. 641S-1

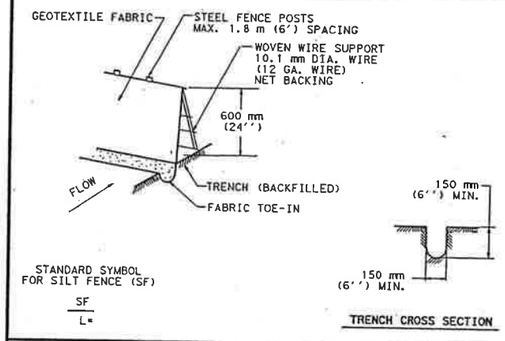

NOTES:
1. STEEL POSTS WHICH SUPPORT THE SILT FENCE SHALL BE INSTALLED ON A SLIGHT ANGLE TOWARD THE ANTICIPATED RUNOFF SOURCE. POST MUST BE EMBEDDED A MINIMUM OF 300 mm (1'').
2. THE TOE OF THE SILT FENCE SHALL BE TRENCHED IN WITH A SPADE OR MECHANICAL TRENCHER, SO THAT THE DOWNSLOPE FACE OF THE TRENCH IS FLAT AND PERPENDICULAR TO THE LINE OF FLOW. WHERE FENCE CAN NOT BE TRENCHED INTO THE SURFACE (E.G. PAVEMENT), THE FABRIC FLAP SHALL BE WEIGHTED DOWN WITH WASHED GRAVEL ON UPHILL SIDE TO PREVENT FLOW UNDER FENCE.
3. THE TRENCH MUST BE A MINIMUM OF 150 mm (6 inches) DEEP AND 150 mm (6 inches) WIDE TO ALLOW FOR THE SILT FENCE FABRIC TO BE LAID IN THE GROUND AND BACKFILLED WITH COMPACTED MATERIAL.
4. SILT FENCE SHOULD BE SECURELY FASTENED TO EACH STEEL SUPPORT POST OR TO WOVEN WIRE, WHICH IS IN TURN ATTACHED TO THE STEEL FENCE POST.
5. INSPECTION SHALL BE MADE WEEKLY OR AFTER EACH RAINFALL EVENT AND REPAIR OR REPLACEMENT SHALL BE MADE PROMPTLY AS NEEDED.
6. SILT FENCE SHALL BE REMOVED WHEN THE SITE IS COMPLETELY STABILIZED SO AS NOT TO BLOCK OR IMPEDE STORM FLOW OR DRAINAGE.
7. ACCUMULATED SILT SHALL BE REMOVED WHEN IT REACHES A DEPTH OF 150 mm (6 inches). THE SILT SHALL BE DISPOSED OF ON AN APPROVED SITE AND IN SUCH A MANNER THAT WILL NOT CONTRIBUTE TO ADDITIONAL SILTATION.

CITY OF AUSTIN WATERSHED PROTECTION DEPARTMENT		SILT FENCE	
RECORD COPY SIGNED BY J. PATRICK MURPHY	5/23/00 ADOPTED	THE ARCHITECT/ENGINEER ASSUMES RESPONSIBILITY FOR APPROPRIATE USE OF THIS STANDARD.	STANDARD NO. 642S-1

STATE OF TEXAS
JOHN W. STRYBOS
64259
LICENSED
PROFESSIONAL ENGINEER
3/19/2003

EROSION/SEDIMENTATION CONTROL DETAILS

SH 45 / US 183 INTERCHANGE
SCALE: PLAN 1":40'
PROFILE 1":10'

HNTB ARCHITECTS ENGINEERS PLANNERS
The HNTB Companies

Texas Department of Transportation
© 2003 TEXAS TURNPIKE AUTHORITY DIVISION

DRAWING PREPARED BY: HNTB CORPORATION			CITY OF AUSTIN SHEET NO.
SHEET 1 OF 1			A-62
FED. RD. DIV. NO.	FEDERAL AID PROJECT NO.		SHEET NO.
6	MG 2002 (243)		783
STATE	DIST.	COUNTY	
TEXAS	14	WILLIAMSON	
CONT.	SECT.	JOB	HIGHWAY NO.
0683	01	069	SH 45

Pen Tables: bs\32058\TECHPROD\UTIL\Plots\32058uh.pen
Design File: I:\Jobs\32058\TECHPROD\UTIL\Dwg\PHS1\45wep03.dgn

Scale=20.000000:1.000000
Plotted on:18-MAR-2003 10:18

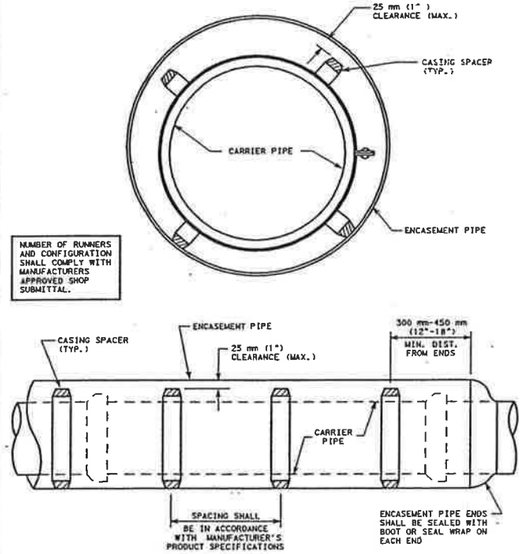

APPLICABLE REFERENCES

STANDARD SPECIFICATION: ITEM 510S.3 (19) W/MW STANDARD PRODUCTS LIST: SPLMW-575.

CITY OF AUSTIN WATER AND WASTEWATER UTILITY	ENCASEMENT DETAIL W/ CASING SPACERS	
RECORD COPY SIGNED BY KATHI F. PAYNE 2/17/00 ADOPTED	THE ARCHITECT/ENGINEER ASSUMES RESPONSIBILITY FOR APPROPRIATE USE OF THIS STANDARD.	STANDARD NO. 501S-1

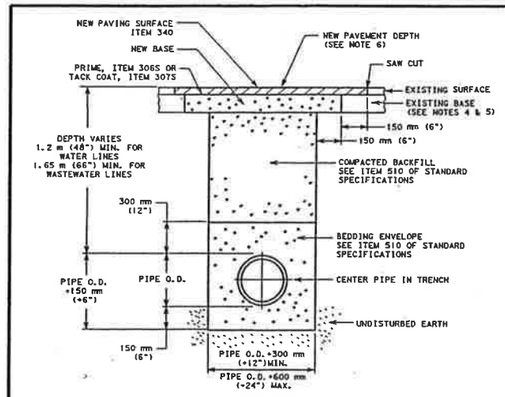

NOTES:

1. THE EXISTING PAVING SURFACE SHALL BE SAW CUT IN A STRAIGHT LINE A MINIMUM OF 300 mm (12") WIDER THAN THE UNDISTURBED SIDES OF THE TRENCH, SYMETRICAL ABOUT THE CENTER LINE OF THE EXCAVATION.
2. ANY CONCRETE PAVING SHALL BE SAW CUT 150 mm (6") WIDER THAN UNDISTURBED SIDES OF EXCAVATION.
3. IF EXCAVATION AREA IS OPEN FOR TEMPORARY PUBLIC USE, THE SURFACE SHALL BE MAINTAINED LEVEL WITH ADJACENT RIDING SURFACE WITH COLD MIX OR TEMPORARY HOT MIX ASPHALTIC CONCRETE.
4. ROAD BASE AND SURFACE MATERIALS IN THE TRENCH CUT SHALL BE REPLACED IN KIND OF EQUAL THICKNESS, OR MINIMUM BASE THICKNESS OF 250 mm (10"), WHICHEVER IS GREATER.
5. ALL DAMAGED AREAS OF PAVEMENT OUTSIDE THE TRENCH CUT SHALL BE REMOVED AND REPLACED WITH MINIMUM OF 200 mm (8") OF BASE OR MATCH EXISTING THICKNESS, WHICHEVER IS GREATER.
6. SURFACE PAVEMENT SHALL BE OF THE KIND AND THICKNESS AS EXISTING, OR MINIMUM 50 mm (2"), WHICHEVER IS GREATER.

CITY OF AUSTIN WATER AND WASTEWATER UTILITY	TYPICAL TRENCH WITH PAVED SURFACE	
RECORD COPY SIGNED BY LEON BARBA 8/18/00 ADOPTED	THE ARCHITECT/ENGINEER ASSUMES RESPONSIBILITY FOR APPROPRIATE USE OF THIS STANDARD.	STANDARD NO. 510S-3

REPAIR OF NEW STREETS and ARTERIAL STREETS IN GOOD CONDITION (UCM SECTION 5.7.7)

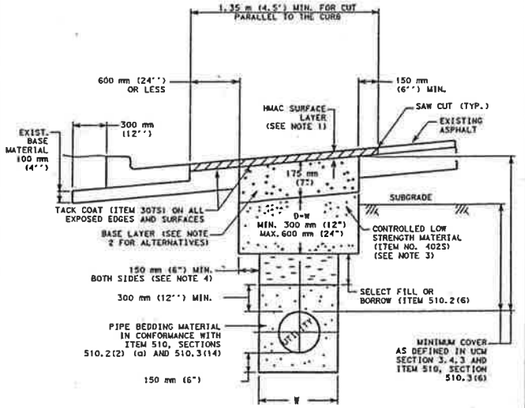

NOTE:

1. REPLACEMENT AC SURFACE LAYER SHALL BE OF THE TYPE AND THICKNESS BASED ON FUNCTIONAL CLASSIFICATION.
   a) MIN. 50 mm (2") HMAC TYPE "D" FOR TRENCH REPAIR IN LOCAL/RESIDENTIAL STREETS.
   b) MIN. 75 mm (3") HMAC TYPE "C" FOR TRENCH REPAIR IN COLLECTOR/ARTERIAL STREETS.
   SEE ITEM 340, SECTION 340.3 (2).
2. BASE LAYER ALTERNATIVES:
   a) 175 mm (7") CLASS "J" PC CONCRETE (ITEM 403). (A PC CONCRETE GREATER THAN A 2 SACK MIX WILL NOT BE ALLOWED.)
   b) 250 mm (10") CONTROLLED LOW STRENGTH MATERIAL (ITEM 4025); OR
   c) FLEXIBLE BASE (ITEM 210S) THICKNESS TWICE THE EXISTING BASE THICKNESS BUT A MINIMUM OF 0.45 m (18").
3. CLASS "J" (2 SACK MIX) MAY BE SUBSTITUTED FOR CONTROLLED LOW STRENGTH MATERIAL, IF APPROVED BY THE ENGINEER OR DESIGNATED REPRESENTATIVE. PC CONCRETE GREATER THAN A 2 SACK MIX WILL NOT BE ALLOWED.

CITY OF AUSTIN DEPARTMENT OF PUBLIC WORKS	EXCAVATION NEXT TO C&G-TRENCH WIDTH GREATER THAN 0.3 m (12")	
RECORD COPY SIGNED BY LEON BARBA 8/19/02 ADOPTED	THE ARCHITECT/ENGINEER ASSUMES RESPONSIBILITY FOR APPROPRIATE USE OF THIS STANDARD.	STANDARD NO. 100S-6C

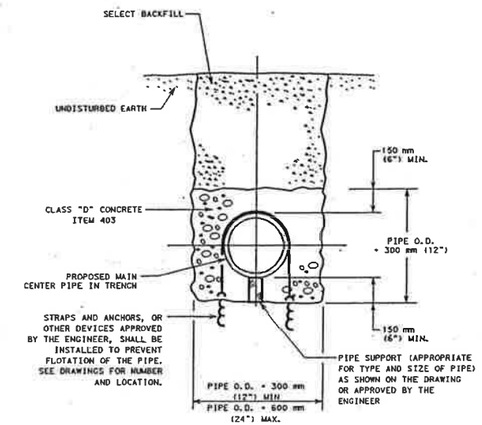

CITY OF AUSTIN WATER AND WASTEWATER UTILITY	CONCRETE ENCASEMENT	
RECORD COPY SIGNED BY LEON BARBA 8/18/00 ADOPTED	THE ARCHITECT/ENGINEER ASSUMES RESPONSIBILITY FOR APPROPRIATE USE OF THIS STANDARD.	STANDARD NO. 505S-1

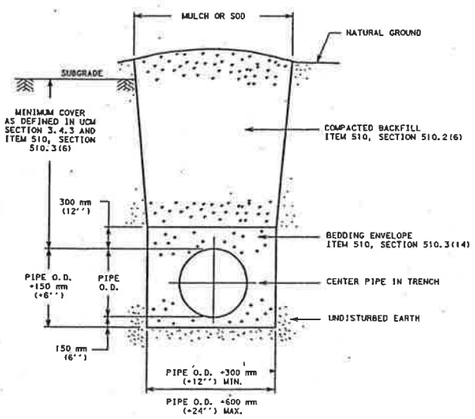

REFERENCES:

1. UTILITY CRITERIA MANUAL SECTION 3.4.3, "FINAL DESIGN"
2. STANDARD SPECIFICATION MANUAL ITEM 510, SECTION 510.2(6), "SELECT BACKFILL OR BORROW"; SECTION 510.3(6), "TRENCH DETAIL AND DEPTH OF COVER"; SECTION 510.3(14), "PIPE BEDDING ENVELOPE"

CITY OF AUSTIN DEPARTMENT OF PUBLIC WORKS	TYPICAL TRENCH DETAIL WITH UNFINISHED SURFACE	
RECORD COPY SIGNED BY LEON BARBA 8/19/02 ADOPTED	THE ARCHITECT/ENGINEER ASSUMES RESPONSIBILITY FOR APPROPRIATE USE OF THIS STANDARD.	STANDARD NO. 510S-5

REPAIR OF NEW STREETS and ARTERIAL STREETS IN GOOD CONDITION (UCM SECTION 5.7.7)

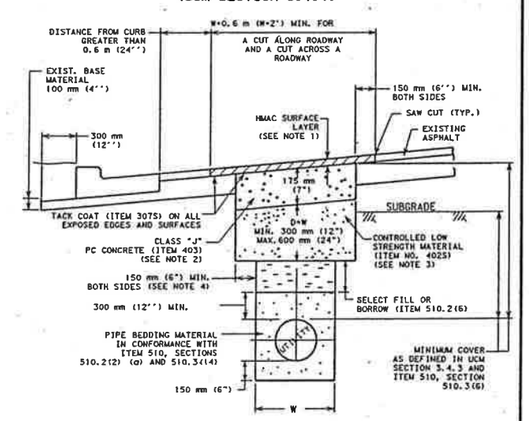

NOTE:

1. REPLACEMENT AC SURFACE LAYER SHALL BE OF THE TYPE AND THICKNESS BASED ON FUNCTIONAL CLASSIFICATION.
   a) MIN. 50 mm (2") HMAC TYPE "D" FOR TRENCH REPAIR IN LOCAL/RESIDENTIAL STREETS.
   b) MIN. 75 mm (3") HMAC TYPE "C" FOR TRENCH REPAIR IN COLLECTOR/ARTERIAL STREETS.
   SEE ITEM 340, SECTION 340.3 (2).
2. BASE LAYER ALTERNATIVES:
   a) 175 mm (7") CLASS "J" PC CONCRETE (ITEM 403). (A PC CONCRETE GREATER THAN A 2 SACK MIX WILL NOT BE ALLOWED.)
   b) 250 mm (10") CONTROLLED LOW STRENGTH MATERIAL (ITEM 4025); OR
   c) FLEXIBLE BASE (ITEM 210S) THICKNESS TWICE THE EXISTING BASE THICKNESS BUT A MINIMUM OF 0.45 m (18").
3. CLASS "J" (2 SACK MIX) MAY BE SUBSTITUTED FOR CONTROLLED LOW STRENGTH MATERIAL, IF APPROVED BY THE ENGINEER OR DESIGNATED REPRESENTATIVE. PC CONCRETE GREATER THAN A 2 SACK MIX WILL NOT BE ALLOWED.

CITY OF AUSTIN DEPARTMENT OF PUBLIC WORKS	EXCAVATION-TRENCH WIDTH GREATER THAN 0.3 m (12")	
RECORD COPY SIGNED BY LEON BARBA 8/19/02 ADOPTED	THE ARCHITECT/ENGINEER ASSUMES RESPONSIBILITY FOR APPROPRIATE USE OF THIS STANDARD.	STANDARD NO. 100S-6D

John W. Strybos

STATE OF TEXAS
JOHN W. STRYBOS
64259
LICENSED
PROFESSIONAL ENGINEER

3/19/2003

WATER STANDARDS

SH 45 / US 183 INTERCHANGE

HNTB ARCHITECTS ENGINEERS PLANNERS
The HNTB Companies

Texas Department of Transportation
© 2003 TEXAS TURNPIKE AUTHORITY DIVISION

DRAWING PREPARED BY: HNTB CORPORATION				CITY OF AUSTIN SHEET NO.
SHEET 1 OF 1				A-63
FED. RD. DIV. NO.	FEDERAL AID PROJECT NO.			SHEET NO.
6	MG 2002 (243)			784
DGN: JEG	STATE	DIST.	COUNTY	
CHK: JWS	TEXAS	14	WILLIAMSON	
DWN: JEG	CONT.	SECT.	JOB	HIGHWAY NO.
CHK: JWS	0683	01	069	SH 45

Pen Tables:I:\Jobs\32058\TECHPROD\Util\Plots\32058Uh.pen
Design Filename: I:\Jobs\32058\TECHPROD\UTIL\DwgVPHS1\45wep04.dgn

Scale= 20.000000:1.000000
Plotted on: 18-MAR-2003 10:19
Design Filename: I:\Jobs\32058\TECHPROD\UTIL\Dwg\PHS1\45wep05.dgn
Pen Table: I:\Jobs\32058\TECHPROD\UTIL\Plots\32058Uh.pen

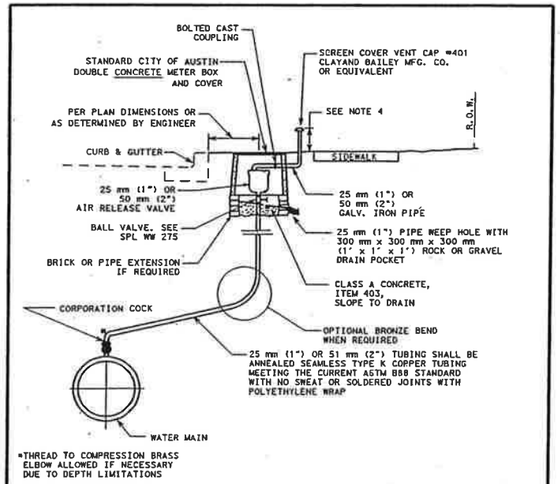

*THREAD TO COMPRESSION BRASS ELBOW ALLOWED IF NECESSARY DUE TO DEPTH LIMITATIONS

NOTES:
1. EXTERIOR SURFACES OF EXPOSED AIR VENT PIPE AND D.I. SUPPORT PIPE SHALL BE PAINTED WITH RUST-OLEUM ACRYLIC 5225 (SAFETY BLUE), OR EQUAL, PER COATING MANUFACTURER INSTRUCTIONS PRIOR TO INSTALLATION.
2. AIR VENT PIPE INSTALLATION SHALL BE AS NEAR AS PRACTICAL TO RIGHT-OF-WAY LINE.
3. CONCRETE METER BOX PENETRATION SHALL BE CORE BIT DRILLED. VOID SHALL BE FILLED BY PRESS-SEAL GASKET CORP. PSX RESILIENT CONNECTOR MEETING ASTM C923 OR APPROVED EQUAL.
4. IN UNDEVELOPED AREAS, THE AIR RELEASE SHALL BE 1.25 m (5') MIN. IN HEIGHT SUPPORTED BY A 100 mm (4") STEEL POLE WHICH HAS BEEN PAINTED BLUE AND FILLED WITH CONCRETE. IN DEVELOPED AREAS, THE AIR RELEASE SHALL BE 200 mm (8") TO 300 mm (12") IN HEIGHT AND LOCATED NOT TO CONFLICT WITH THE SIDEWALK.

CITY OF AUSTIN WATER AND WASTEWATER UTILITY		25 mm (1") - 50 mm (2") VENTED AIR RELEASE VALVE INSTALLATION (TYPE I)	
RECORD COPY SIGNED BY KATHI L FLOWERS	11/17/00 ADOPTED	THE ARCHITECT/ENGINEER ASSUMES RESPONSIBILITY FOR APPROPRIATE USE OF THIS STANDARD.	STANDARD NO. 511S-1A

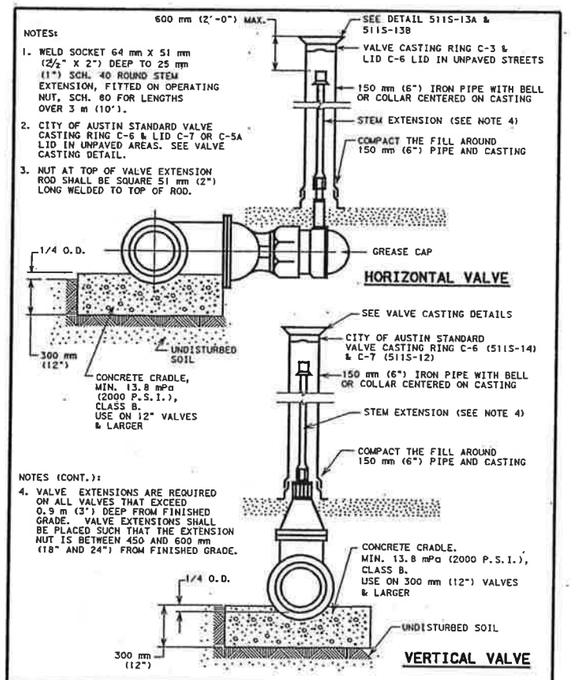

NOTES:
1. WELD SOCKET 64 mm X 51 mm (2½" X 2") DEEP TO 25 mm (1") SCH. 40 ROUND STEM EXTENSION, FITTED ON OPERATING NUT, SCH. 80 FOR LENGTHS OVER 3 m (10').
2. CITY OF AUSTIN STANDARD VALVE CASTING RING C-6 & LID C-7 OR C-5A LID IN UNPAVED AREAS. SEE VALVE CASTING DETAIL.
3. NUT AT TOP OF VALVE EXTENSION ROD SHALL BE SQUARE 51 mm (2") LONG WELDED TO TOP OF ROD.

NOTES (CONT.):
4. VALVE EXTENSIONS ARE REQUIRED ON ALL VALVES THAT EXCEED 0.9 m (3') DEEP FROM FINISHED GRADE. VALVE EXTENSIONS SHALL BE PLACED SUCH THAT THE EXTENSION NUT IS BETWEEN 450 AND 600 mm (18" AND 24") FROM FINISHED GRADE.

CITY OF AUSTIN WATER AND WASTEWATER UTILITY		TYPICAL GATE VALVE	
RECORD COPY SIGNED BY KATHI F. PAYNE	4/5/99 ADOPTED	THE ARCHITECT/ENGINEER ASSUMES RESPONSIBILITY FOR APPROPRIATE USE OF THIS STANDARD.	STANDARD NO. 511S-7

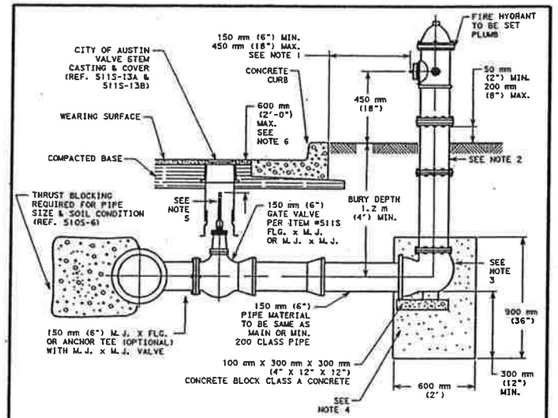

NOTES:
1. DIMENSIONS SHOWN ARE APPLICABLE IN SPACE BETWEEN CURB AND SIDEWALK. WHERE WALK ABUTS CURB, AND IN PUBLIC OR COMMERCIAL AREAS, DIMENSION FROM BACK OF CURB SHALL BE 0.9 m TO 1.8 m (3' TO 6'). HYDRANTS ARE NOT TO BE PLACED IN SIDEWALK AREAS. SEE CITY OF AUSTIN STANDARD SPECIFICATIONS ITEM NO. 511, WATER VALVES FOR LOCATION OF HYDRANT.
2. FOR BURY DEPTHS GREATER THAN 1.5 m (5'), ONE BARREL EXTENSION NOT EXCEEDING 600 mm (2') LENGTH SHALL BE INSTALLED DIRECTLY BELOW THE FIRE HYDRANT. BREAK AWAY BOLTS (SHOE TYPES) SHALL BE PROPOERLY SPACED AND PLACED WHEN EXTENSIONS ARE NEEDED TO ACCOMODATE FIRE HYDRANTS.
3. FIRE LINE SHALL HAVE JOINT RESTRAINT FROM MAIN TO FIRE HYDRANT.
4. CRUSHED STONE OR GRAVEL SHALL BE PLACED AROUND THE BOTTOM OF THE HYDRANT FOR A RADIUS OF AT LEAST 300 mm (12") AND EXTEND AT LEAST 300 mm (12") ABOVE THE OUTLET. DO NOT BLOCK DRAIN HOLES.
5. WELD SOCKET 64 mm X 51 mm (2½" X 2") DEEP TO 25 mm (1") SCH. 40 ROUND STEM EXTENSION, FITTED ON OPERATING NUT, SCH. 80 FOR LENGTHS OVER 3 m (10').
6. VALVE EXTENSIONS ARE REQUIRED ON ALL VALVES THAT EXCEED 0.9 m (3') DEEP FROM FINISHED GRADE. VALVE EXTENSIONS SHALL BE PLACED SUCH THAT THE EXTENSION NUT IS BETWEEN 450 AND 600 mm (18" AND 24") FROM FINISHED GRADE.

CITY OF AUSTIN WATER AND WASTEWATER UTILITY		STANDARD FIRE HYDRANT INSTALLATION	
RECORD COPY SIGNED BY KATHI L FLOWERS	11/17/00 ADOPTED	THE ARCHITECT/ENGINEER ASSUMES RESPONSIBILITY FOR APPROPRIATE USE OF THIS STANDARD.	STANDARD NO. 511S-17

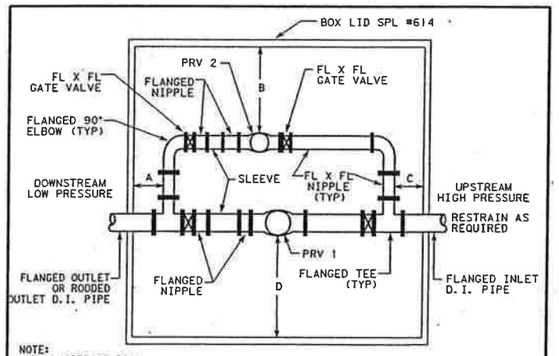

NOTE:
ACTUAL SIZE OF BOX WILL BE DESIGNED BY ENGINERR BASED ON PRV SIZE.

ELEVATION

NOTES:
1. GATE VALVES TO BE WHEEL OPERATED.
2. ALL SLEEVES TO BE ON DOWNSTREAM SIDE FOR SAFETY PURPOSES.
3. ALL UPSTREAM OR HIGH PRESSURE MATERIALS TO BE FLANGED.
4. ALL NON-FLANGED PIPE TO BE INSTALLED WITH MEG-A-LUG RETAINER GLAND OR APPROVED EQUIVALENT RETAINER.
5. ALL VALVES TO HAVE CONCRETE SUPPORT BLOCKS.
6. ALL POINTS "A" THROUGH "D" TO A MINIMAL 450 mm (18") CLEARANCE.
7. ALL PIPE IN PRV/BY-PASS INSTALLATION TO BE THREADED BRASS OR FLANGED D.I. OR C.I. PIPE.
8. PRESSURE REDUCER VALVE SHALL BE IN ACCORDANCE WITH STANDARD PRODUCTS LIST NO. WW-319.
9. THE DESIGN ENGINEER SHALL PROVIDE THE ALTITUDE AND THE PRESSURE ON THE LOW SIDE OF THE PRV ON THE PLANS.
10. PRV WILL NOT BE INSTALLED IN TRAFFIC AREAS.

CITY OF AUSTIN WATER AND WASTEWATER UTILITY		DUAL PRV INSTALLATION	
RECORD COPY SIGNED BY KATHI L FLOWERS	9/23/02 ADOPTED	THE ARCHITECT/ENGINEER ASSUMES RESPONSIBILITY FOR APPROPRIATE USE OF THIS STANDARD.	STANDARD NO. 511S-5

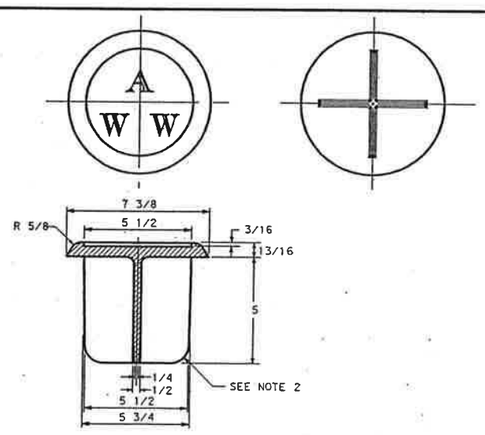

NOTES:
1. MATERIAL SHALL BE GRAY CAST IRON, ASTM A48, GRADE 30B.
2. TYPICAL FILLET IS 3/16'' RADIUS
3. LETTERING SHALL BE 1 1/2'' HEIGHT AND LOCATED AS SHOWN.
4. THIS LID FITS INSIDE 6'' I.D. PIPE.
5. THE MANUFACTURER'S IDENTIFICATION AND CASTING NUMBER, AND THE COUNTRY WHERE CAST, SHALL BE DISTINCTLY CAST ONTO EACH LID.
6. DRAFT AND SHRINKAGE ALLOWANCE SHALL BE IN ACCORD WITH NORMAL FOUNDRY PRACTICE.
7. FINISH BY REMOVING FINS AND FLASHING; PAINT WITH BLACK ASPHALT COATING,
8. WEIGHT: APPROXIMATELY 13 LBS.
9. ALL DIMENSIONS IN INCHES.

REV. DATE: 2-10-97 | DESCRIPTION: STANDARD MANUAL

CITY OF AUSTIN WATER AND WASTEWATER UTILITY		VALVE BOX CASTING C-3 LID	
RECORD COPY SIGNED BY G.L. MARTIN	4/22/97 DATE	ADOPTED: 9/16/88	STANDARD NO. 511-11
APPROVED		SCALE: N.T.S.	
		INITIAL: RAM	

REPAIR OF NEW STREETS and ARTERIAL STREETS in GOOD CONDITION (UCM SECTION 5.7.7)

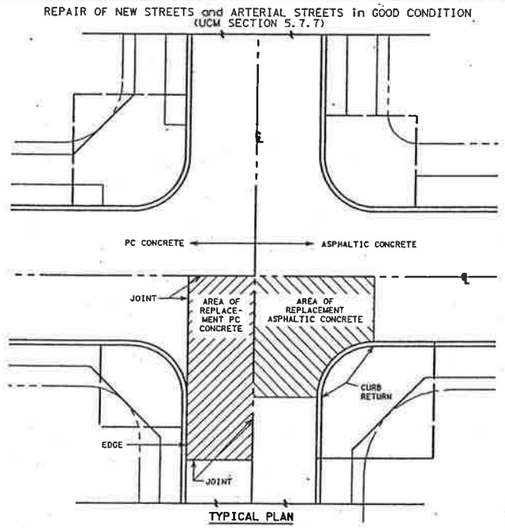

TYPICAL PLAN

TRENCH REPAIRS WITHIN PORTLAND CEMENT CONCRETE PAVEMENTS NOTE:
IF ANY PART OF THE TRENCH REPAIR FALLS WITHIN AN INTERSECTION, THEN THE ENTIRE CONCRETE SLAB FROM JOINT TO JOINT AND JOINT TO EDGE SHALL BE REPLACED, UNLESS OTHERWISE DIRECTED IN WRITING BY THE DIRECTOR.

TRENCH REPAIRS WITHIN ASPHALTIC CONCRETE PAVEMENTS NOTES:
1. IF ANY PART OF THE TRENCH REPAIR FALLS WITHIN AN INTERSECTION, DEFINED FROM CURB RETURN TO CURB RETURN, THE ENTIRE QUADRANT OF THE EXISTING SURFACE SHALL BE REPLACED, UNLESS OTHERWISE DIRECTED IN WRITING BY THE DIRECTOR.
2. A QUADRANT IS DEFINED AS THE CROSS-HATCHED AREA IN THE ABOVE DETAIL.

CITY OF AUSTIN DEPARTMENT OF PUBLIC WORKS AND TRANSPORTATION		STREET REPAIR REQUIREMENTS WITHIN INTERSECTIONS	
RECORD COPY SIGNED BY LINO RIVERA	9/29/99 ADOPTED	THE ARCHITECT/ENGINEER ASSUMES RESPONSIBILITY FOR APPROPRIATE USE OF THIS STANDARD.	STANDARD NO. 1100S-7

JOHN W. STRYBOS
64259
LICENSED
PROFESSIONAL ENGINEER
STATE OF TEXAS
3/19/2003

WATER STANDARDS

SH 45 / US 183 INTERCHANGE

HNTB ARCHITECTS ENGINEERS PLANNERS
The HNTB Companies

Texas Department of Transportation
© 2003 TEXAS TURNPIKE AUTHORITY DIVISION

DRAWING PREPARED BY: HNTB CORPORATION				CITY OF AUSTIN SHEET NO.
SHEET 1 OF 1				A-64
FED. RD. DIV. NO.	FEDERAL AID PROJECT NO.			SHEET NO.
6	MG 2002 (243)			785
DGN: JEG	STATE	DIST.	COUNTY	
CHK. DGN: JWS	TEXAS	14	WILLIAMSON	
DWG: JEG	CONT.	SECT.	JOB	HIGHWAY NO.
CHK. DWG: JWS	0683	01	069	SH 45

Scale: 20.000000:1.000000
Plotted on: 18-MAR-2003 10:19
Pen Table: I:\Jobs\32058\TECHPROD\UTIL\Plots\32058Uh.pen
Design Filename: I:\Jobs\32058\TECHPROD\UTIL\Dwg\PHS1\45wep06.dgn

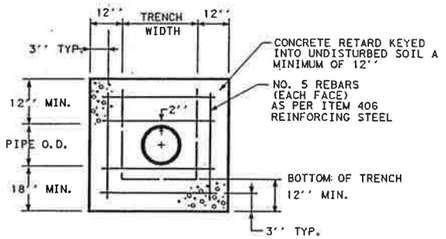

ELEVATION

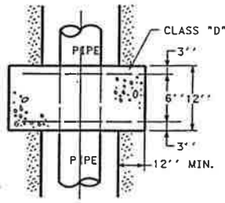

TOP VIEW

REV. DATE: 2-27-97 DESCRIPTION: STANDARD MANUAL

CITY OF AUSTIN WATER AND WASTEWATER UTILITY	CONCRETE RETARD	
	ADOPTED:- 2-11-88	STANDARD NO.
	SCALE:-N.T.S.	593-1
APPROVED DATE	INITIAL:- L.M.	

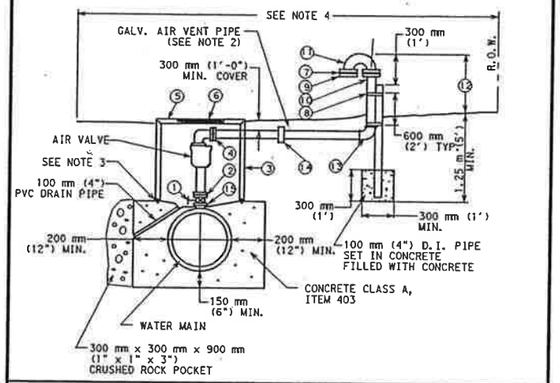

1. LAY DOWN GATE VALVE WITH HAND WHEEL
2. INSULATED FLANGE CONNECTION
3. CLASS III R.C.P. MANHOLE 1.524 m (60") MIN. I.D.
4. BOLTED CAST COUPLING ROCKWELL 441 OR EQUAL
5. REINFORCED PRECAST CONCRETE LID
6. C.O.A. RING AND 813 mm (32") COVER
7. NO. 16 MESH BRASS CLOTH
8. 6 mm X 25 mm (1/4" X 1") GALV. STRAPS DRILLED TO 100 mm (4") D.I. PIPE FILLED WITH CONCRETE (SEE NOTE 2)
9. COMPANION FLANGE (SEE NOTE 6)
0. AIR VENT PIPE
1. RETURN BEND (FLG X FLG)
2. 1.25 m (5') MIN. (UNDEV. AREAS) 355 mm (14") MAX. (DEV. AREAS)
3. 90° BEND (FLG X MJ)
4. FLEXIBLE COUPLING
5. FLANGED OUTLET PER ANSI B 16.1

CITY OF AUSTIN WATER AND WASTEWATER UTILITY	TYPE III-76 mm (3") OR LARGER VENTED AIR/VACUUM VALVE INSTALLATION	
RECORD COPY SIGNED BY KATHI L FLOWERS 11/17/00 ADOPTED	THE ARCHITECT/ENGINEER ASSUMES RESPONSIBILITY FOR APPROPRIATE USE OF THIS STANDARD.	STANDARD NO. 511S-3A 1 OF 2

NOTES:

1. ON 250 mm (10") AND LARGER TWO PIECE COMBINATION AIR VALVES, THE OUTLET PIPING OF THE SMALL VALVE SHALL BE VENTED WITHIN THE MANHOLE INTO THE SIDE OF THE LARGER VENT PIPE THAT GOES ABOVE GROUND.
2. AIR VENT PIPE 150 mm (6") AND LARGER SHALL BE D.I. (CLASS 350 MIN.) PIPE FLANGE FITTINGS ORDERED SPECIAL WITH SHOP APPLIED KOPPER INERTOL RUST INHIBITIVE PRIMER 621, OR EQUAL. IN LIEU OF COAL TAR. EXTERIOR SURFACES OF ALL EXPOSED PIPE SHALL BE PAINTED WITH RUST-OLEUM ACRYLIC 5225 (SAFETY BLUE), OR EQUAL, PER COATING MANUFACTURER'S INSTRUCTIONS PRIOR TO INSTALLATION.
3. SEALANT SHALL BE 32 mm (1 1/4) FLEXIBLE BUTYL RESIN SEALANT CS-102 AS MANUFACTURED BY CONCRETE SEALANTS, INC. OR EQUAL.
4. AIR VENT PIPE INSTALLATION SHALL BE LOCATED WITHIN EASMENT.
5. CONCRETE MANHOLE PENETRATIONS SHALL BE CORE BIT DRILLED. VOID SHALL BE FILLED BY PRESSING SEAL GASKET CORP. PSX RESILIENT CONNECTOR MEETING ASTM C923 OR APPROVED EQUAL.
6. CROSS SECTIONAL AREA OF OPENING TO BE EQUAL TO OR GREATER THAN CROSS SECTIONAL AREA OF AIR VENT PIPE.
7. AIR/VACUUM VALVE SHALL BE INSTALLED IN A MANNER WHICH WILL ALLOW REMOVAL OF ASSEMBLY WITHOUT REMOVAL OF PRECAST CONCRETE LID.

AIR VALVE	GATE VALVE	VENT PIPE (MIN.)	M.H. DIA. (MIN.)
76 mm (3")	76 mm (3")	76 mm (3")	1.524 m (5')
102 mm (4")	102 mm (4")	102 mm (4")	1.829 m (6')
152 mm (6")	152 mm (6")	152 mm (6")	1.829 m (6')
203 mm (8")	203 mm (8")	203 mm (8")	1.829 m (6')
254 mm (10")	254 mm (10")	254 mm (10")	2.134 m (7')
305 mm (12")	305 mm (12")	305 mm (12")	2.134 m (7')

CITY OF AUSTIN WATER AND WASTEWATER UTILITY	TYPE III-76 mm (3") OR LARGER VENTED AIR/VACUUM VALVE INSTALLATION	
RECORD COPY SIGNED BY KATHI L FLOWERS 11/17/00 ADOPTED	THE ARCHITECT/ENGINEER ASSUMES RESPONSIBILITY FOR APPROPRIATE USE OF THIS STANDARD.	STANDARD NO. 511S-3A 2 OF 2

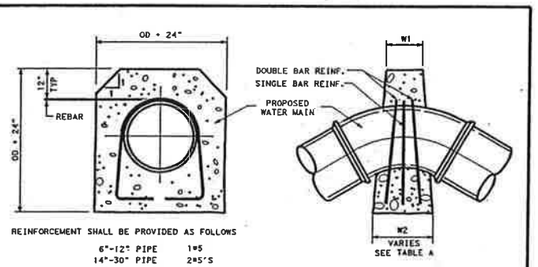

REINFORCEMENT SHALL BE PROVIDED AS FOLLOWS

6"-12" PIPE	1#5
14"-30" PIPE	2#5'S
36"-48" PIPE	2#7'S

VERTICAL DOWN BEND

TABLE A
UPWARD THRUST GRAVITY BLOCKS

PIPE DIA.	MIN. TOP WIDTH W1	ANGLE (degrees)	BOTTOM WIDTH-W2 (in)
6"	6"	0-5	NOTE 2
		5-15	24
		15-25	48
		⇐ 25	NOTE 1
8"	6"	0-5	NOTE 2
		5-9	30
		9-15	36
		⇐ 15	NOTE 1
12"	6"	0-5	NOTE 2
		5-15	48
		⇐ 15	NOTE 1
16"	12"	0-5	NOTE 2
		5-10	60
		10-15	96
		⇐ 15	NOTE 1
24" THRU 36" DIA.		⇐ 5.0	NOTE 1
42" THRU 48" DIA.		⇐ 3.0	NOTE 1

NOTES:

1. FOR ANGLES GREATER THAN THOSE INDICATED RESTRAINED JOINTS SHALL BE INSTALLED
2. FOR JOINT DEFLECTIONS LESS THAN 5 DEGREES, NO HORIZONTAL OR VERTICAL THRUST RESTRAINT IS REQUIRED FOR PIPES LESS THAN 42" IN DIAMETER.

THRUST BLOCK DESIGN AS FOLLOWS

A. PRESSURE OF 150 P.S.I. (ACTUAL IF HIGHER) + 50 % SURGE ALLOWANCE

B. MAXIMUM SOIL BEARING SEE TABLE BELOW

SOIL TYPES	PRESSURE
LOOSE OR SPONGY SOIL	1500 Lb/Sq.Ft.
UNDISTURBED SOIL, CALICHE	2000 Lb/Sq.Ft.
LIMESTONE ROCK	4000 Lb/Sq.Ft.

CITY OF AUSTIN WATER AND WASTEWATER UTILITY	CONCRETE THRUST BLOCKING	
RECORD COPY SIGNED BY JAMES E.THOMPSON 2/11/86 APPROVED DATE	ADOPTED: 2/11/86 SCALE: N.T.S. INITIAL:	STANDARD NO. 510-6 1 OF 2

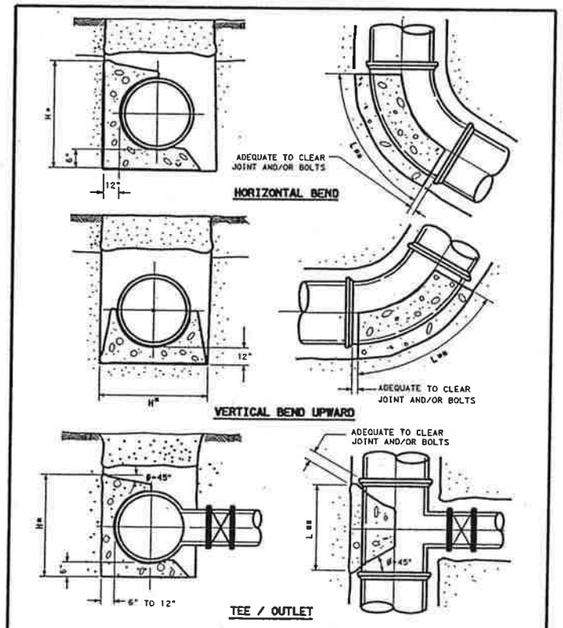

* THE DIMENSION FOR "H" MUST BE GREATER THAN DIAMETER OF THE PIPE
** LENGTH "L" ALONG THE BEND MUST BE GREATER THAN "H" AND LESS THAN 2 TIMES "H"

CITY OF AUSTIN WATER AND WASTEWATER UTILITY	CONCRETE THRUST BLOCKING	
RECORD COPY SIGNED BY JAMES E.THOMPSON 2/11/86 APPROVED DATE	ADOPTED: 2/11/86 SCALE: N.T.S. INITIAL:	STANDARD NO. 510-6 2 OF 2

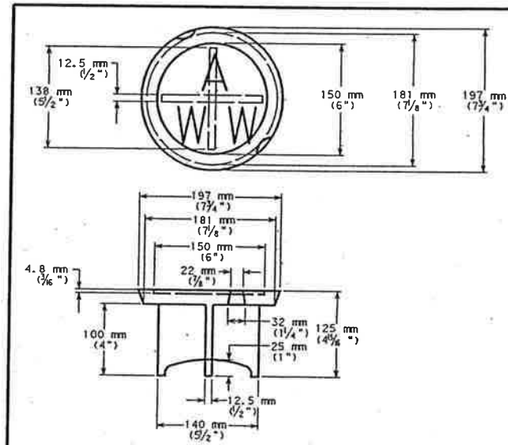

NOTES:

1. MATERIAL SHALL BE GRAY CAST IRON, ASTM A48, GRADE 30B.
2. TYPICAL FILLET IS 4.8 mm (3/16") RADIUS
3. LETTERING SHALL BE 38 mm (1½") HEIGHT AND LOCATED AS SHOWN.
4. THIS LID REQUIRES TWO (2) PICK SLOTS.
5. THE MANUFACTURER'S IDENTIFICATION AND CASTING NUMBER, AND THE COUNTRY WHERE CAST, SHALL BE DISTINCTLY CAST ONTO EACH LID.
6. DRAFT AND SHRINKAGE ALLOWANCE SHALL BE IN ACCORD WITH NORMAL FOUNDRY PRACTICE.
7. FINISH BY REMOVING FINS AND FLASHING; PAINT WITH BLACK ASPHALT COATING,
8. WEIGHT: APPROXIMATELY 6 kg (13 lbs).

CITY OF AUSTIN WATER AND WASTEWATER UTILITY	VALVE BOX CASTING C-7 LID	
RECORD COPY SIGNED BY KATHI F. PAYNE 4/5/99 ADOPTED	THE ARCHITECT/ENGINEER ASSUMES RESPONSIBILITY FOR APPROPRIATE USE OF THIS STANDARD.	STANDARD NO. 511S-12

JOHN W. STRYBOS
64259
LICENSED
PROFESSIONAL ENGINEER
STATE OF TEXAS
3/19/2003

WATER STANDARDS

SH 45 / US 183 INTERCHANGE

HNTB ARCHITECTS ENGINEERS PLANNERS
The HNTB Companies

Texas Department of Transportation
© 2003 TEXAS TURNPIKE AUTHORITY DIVISION

DRAWING PREPARED BY: HNTB CORPORATION				CITY OF AUSTIN SHEET NO.
SHEET 1 OF 1				A-65
FED. RD. DIV. NO.	FEDERAL AID PROJECT NO.			SHEET NO.
6	MG 2002 (243)			786
DGN: JEG	STATE	DIST.	COUNTY	
CHK DGN: JWS	TEXAS	14	WILLIAMSON	
DWG: JEG	CONT.	SECT.	JOB	HIGHWAY NO.
CHK DWG: JWS	0683	01	069	SH 45

Scale: 20.000000:1.000000
Plotted on: 18-APR-2003 11:13

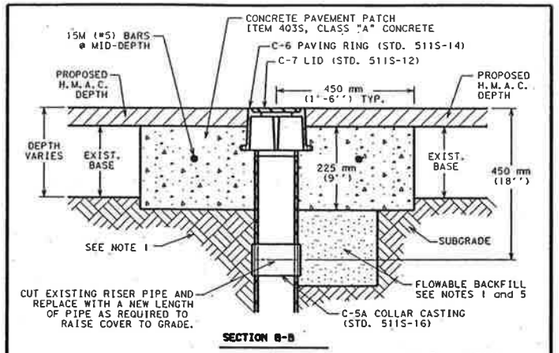

NOTES:

1. SUBGRADE SHALL BE COMPACTED AS PER ITEM 201S, SUBGRADE PREPARATION.
2. VALVE CASTINGS SHALL BE ADJUSTED TO GRADE AFTER FINAL LIFT OF OVERLAY IS IN PLACE.
3. CLEAN VALVE BOX OF ALL DEBRIS DOWN TO THE BASE OF THE VALVE.
4. REMOVE EXISTING RISER PIPE DOWN 450 mm (18") AND REPLACE TO THE NEW ELEVATION NEW PIPE AND A C-5A CASTING.
5. WHERE CAST IRON CASTINGS TO BE REMOVED REQUIRE EXCAVATION GREATER THAN 500 mm (20") DEEP, CONTRACTOR MAY ELECT TO FILL EXCAVATION WITH CONTROLLED LOW STRENGTH MATERIAL (ITEM 402S) TO THE UNDERSIDE OF THE CONCRETE PAVEMENT PATCH IN LIEU OF COMPACTED BACKFILL.
6. REINFORCING STEEL SHALL MEET ITEM 406S, REINFORCING STEEL.

CITY OF AUSTIN WATER AND WASTEWATER UTILITY	WATER VALVE BOX ADJUSTMENT TO GRADE W/ CONCRETE AND H.M.A.C.	
RECORD COPY SIGNED BY KATHI F. PAYNE 4/5/99 ADOPTED	THE ARCHITECT/ENGINEER ASSUMES RESPONSIBILITY FOR APPROPRIATE USE OF THIS STANDARD.	STANDARD NO. 511S-13B

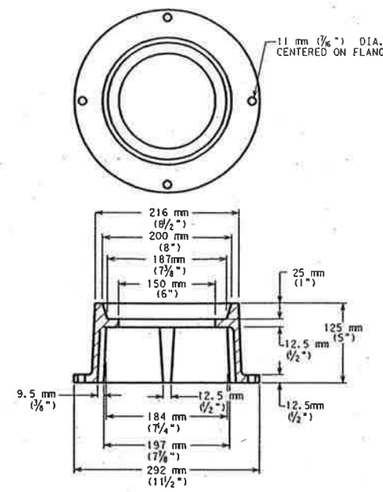

NOTES:

1. MATERIALS SHALL BE GRAY CAST IRON, ASTM A48, GRADE 30B.
2. THE MANUFACTURER'S IDENTIFICATION & CASTING NUMBER & THE COUNTRY WHERE CAST, SHALL BE DISTINCTLY CAST ONTO EACH RING.
3. DRAFT & SHRINKAGE ALLOWANCE SHALL BE IN ACCORD WITH NORMAL FOUNDRY PRACTICE.
4. FINISH BY REMOVING FINS & FLASHING; PAINT WITH BLACK ASPHALT COATING.
5. WEIGHT: APPROXIMATELY 10.5 kg (23 lbs).

CITY OF AUSTIN WATER AND WASTEWATER UTILITY	VALVE BOX CASTING C-6 PAVING RING	
RECORD COPY SIGNED BY KATHI F. PAYNE 4/5/99 ADOPTED	THE ARCHITECT/ENGINEER ASSUMES RESPONSIBILITY FOR APPROPRIATE USE OF THIS STANDARD.	STANDARD NO. 511S-14

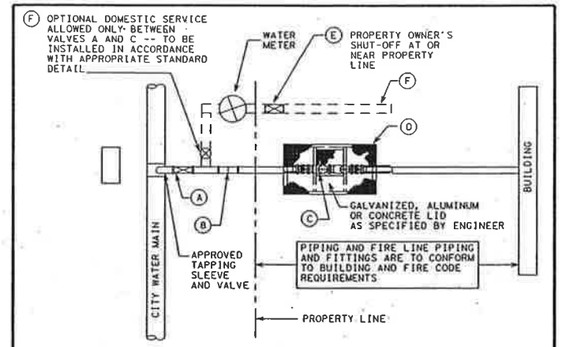

MATERIALS:

A. TAPPING VALVE (GATE, IRON BODY WITH MJ OUTLET)
B. SLEEVE, MJ, REQUIRED OUTSIDE PROPERTY LINE
C. CUSTOMER'S BACKFLOW PREVENTION ASSEMBLY AS REQUIRED BY CROSS CONNECTION ORDINANCES. SEE STANDARD 520S-19 A.
D. VAULT SIZING WILL BE DETERMINED BY DETAIL ON STANDARD 520S-19A. DESIGN AND STRUCTURAL INTEGRITY RATINGS OF EACH VAULT WILL BE DESIGNED AND SEALED BY A LICENSED ENGINEER.
E. CUSTOMER'S SHUT-OFF VALVE ON DOMESTIC WATER LINE
F. DOMESTIC WATER SERVICE LINE VALVE

NOTES:

1. PIPE SIZE DETERMINED BY OWNER PENDING APPROVAL FROM THE WATERSHED PROTECTION AND DEVELOPMENT REVIEW AND FIRE DEPARTMENTS; MUST BE A MINIMUM OF 150 mm (6") IN THE STREET RIGHT-OF-WAY. PLANS MUST BE PREPARED BY A LICENSED ENGINEER IF INSTALLATION IS BY OTHER THAN CITY FORCES.
2. IRON PIPE AND WATER SERVICE CLAMP IN THE STREET RIGHT-OF-WAY SHALL BE WRAPPED COMPLETELY WITH A MINIMUM OF 0.2 mm (8 MIL) POLYETHYLENE FILM.
3. PIPING AND TUBING IN STREET RIGHT-OF-WAY SHALL BE BEDDED IN GRANULAR MATERIALS AS REQUIRED BY SECTION 510.3 (14) OF THE CITY OF AUSTING STANDARD SPECIFICATIONS. BACKFILL ABOVE GRANULAR BEDDING AS REQUIRED BY SECTION 510.3 (25).

CITY OF AUSTIN WATER AND WASTEWATER UTILITY	STANDARD FIRE LINE INSTALLATION WITH OR WITHOUT MASTER METER	
RECORD COPY SIGNED BY KATHI L. FLOWERS 9/23/02 ADOPTED	THE ARCHITECT/ENGINEER ASSUMES RESPONSIBILITY FOR APPROPRIATE USE OF THIS STANDARD.	STANDARD NO. 520S-19A

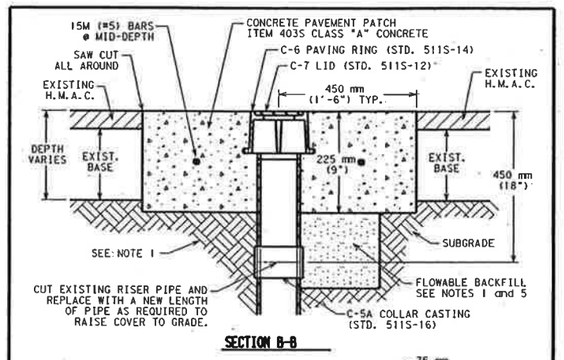

NOTES:

1. SUBGRADE SHALL BE COMPACTED AS PER ITEM 201S, SUBGRADE PREPARATION.
2. VALVE CASTINGS SHALL BE ADJUSTED TO GRADE AFTER FINAL LIFT OF OVERLAY IS IN PLACE.
3. CLEAN VALVE BOX OF ALL DEBRIS DOWN TO THE BASE OF THE VALVE.
4. REMOVE EXISTING RISER PIPE DOWN 450 mm (18") AND REPLACE TO THE NEW ELEVATION USING NEW PIPE AND A C-5A CASTING.
5. WHERE CAST IRON CASTINGS TO BE REMOVED REQUIRE EXCAVATION GREATER THAN 500 mm (20") DEEP, CONTRACTOR MAY ELECT TO FILL EXCAVATION WITH CONTROLLED LOW STRENGTH MATERIAL (ITEM 402S) TO THE UNDERSIDE OF THE CONCRETE PAVEMENT PATCH IN LIEU OF COMPACTED BACKFILL.
6. REINFORCING STEEL SHALL MEET ITEM 406S, REINFORCING STEEL.

CITY OF AUSTIN WATER AND WASTEWATER UTILITY	WATER VALVE BOX ADJUSTMENT TO GRADE W/ FULL DEPTH CONCRETE	
RECORD COPY SIGNED BY KATHI F. PAYNE 4/5/99 ADOPTED	THE ARCHITECT/ENGINEER ASSUMES RESPONSIBILITY FOR APPROPRIATE USE OF THIS STANDARD.	STANDARD NO. 511S-13A

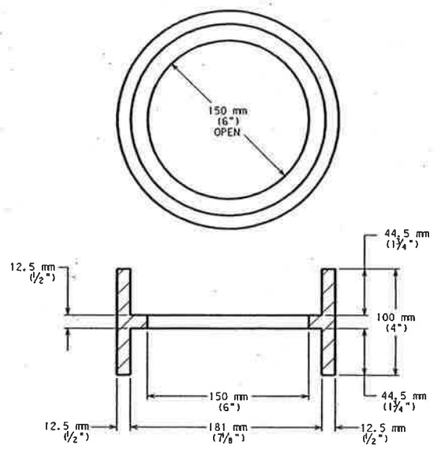

NOTES:

1. MATERIALS SHALL BE GRAY CAST IRON, ASTM A48, GRADE 30B.
2. THIS COLLAR REQUIRED ONLY WITH BOOTS SUPPLIED PRIOR 1988
3. THE MANUFACTURER'S IDENTIFICATION & CASTING NUMBER & THE COUNTRY WHERE CAST, SHALL BE DISTINCTLY CAST ONTO EACH COLLAR.
4. DRAFT & SHRINKAGE ALLOWANCE SHALL BE IN ACCORD WITH NORMAL FOUNDRY PRACTICE.
5. FINISH BY REMOVING FINS & FLASHING; PAINT WITH BLACK ASPHALT COATING.
6. WEIGHT: APPROXIMATELY 8 kg (17 lbs).

CITY OF AUSTIN WATER AND WASTEWATER UTILITY	VALVE BOX CASTING C-5A COLLAR	
RECORD COPY SIGNED BY KATHI F. PAYNE 4/5/99 ADOPTED	THE ARCHITECT/ENGINEER ASSUMES RESPONSIBILITY FOR APPROPRIATE USE OF THIS STANDARD.	STANDARD NO. 511S-16

John W. Strybos

STATE OF TEXAS
JOHN W. STRYBOS
64259
LICENSED
PROFESSIONAL ENGINEER
4-18-2003

WATER STANDARDS

SH 45 / US 183 INTERCHANGE

HNTB ARCHITECTS ENGINEERS PLANNERS
The HNTB Companies

Texas Department of Transportation

© 2003 TEXAS TURNPIKE AUTHORITY DIVISION

DRAWING PREPARED BY: HNTB CORPORATION			CITY OF AUSTIN SHEET NO.
SHEET 1 OF 1			A-66
FED. RD. DIV. NO.	FEDERAL AID PROJECT NO.		SHEET NO.
6	MG 2002 (243)		786A
DGN: JEG	STATE	DIST.	COUNTY
CHK DGN: JWS	TEXAS	14	WILLIAMSON
DWG: JEG	CONT.	SECT.	JOB / HIGHWAY NO.
CHK DWG: JWS	0683	01	069 / SH 45

Pen Table: I:\Jobs\32058\techprod\rdwy\plots\32058h.pen
Design Filename: I:\Jobs\32058\TECHPROD\Util\Dwg\ph61\45wep07.dgn

Scale: 10.000000:1.000000
Plotted on: 20-MAR-2003 12:48

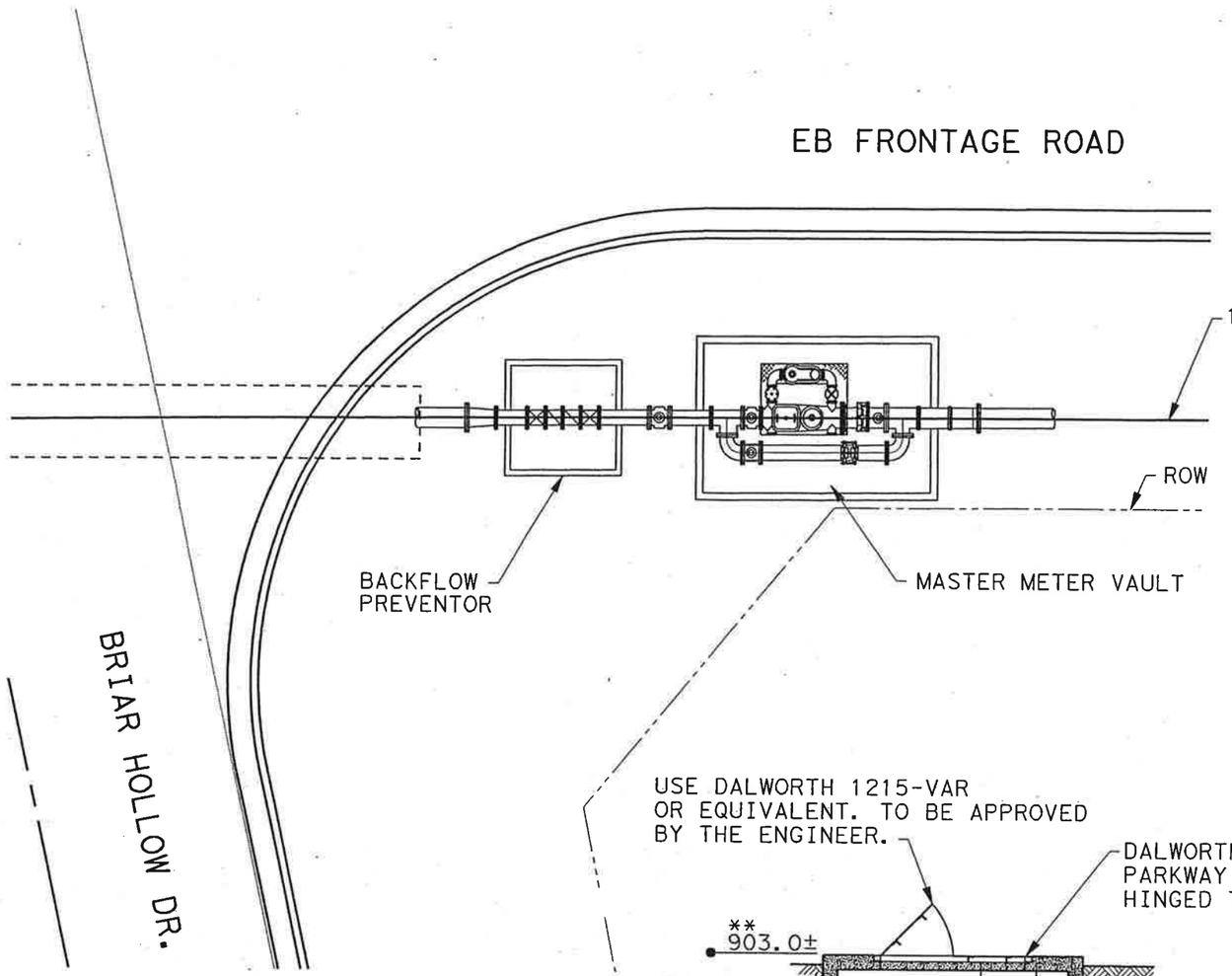





USE DALWORTH 1215-VAR
OR EQUIVALENT. TO BE APPROVED
BY THE ENGINEER.

DALWORTH 65"x41"
PARKWAY FRAME &
HINGED TORISON COVER.

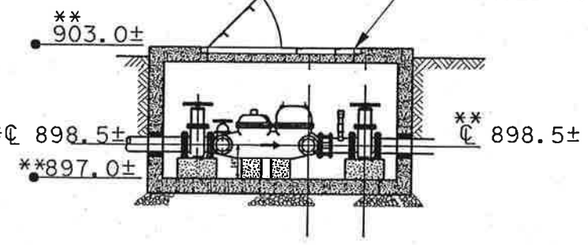

SETTING ELEVATIONS
NTS

*INCLUDES INSTALLATION OF ALL PIPING, METER BOX, REDUCERS, FITTINGS, EXCAVATIONS, BACKFILL, ETC. AS SHOWN HERE AND ON THE DETAILS, COMPLETE AND IN PLACE.

** ELEVATIONS SHOWN ARE APPROXIMATE

NORTH AUSTIN MUD No. 1

MASTER METER WATER VAULT DETAILS

SCALE: 1" = 10'

HNTB ARCHITECTS ENGINEERS PLANNERS
The HNTB Companies

Texas Department of Transportation
© 2003 TEXAS TURNPIKE AUTHORITY DIVISION

DRAWING PREPARED BY: HNTB CORPORATION				CITY OF AUSTIN SHEET NO.
				A67
FED. RD. DIV. NO.	FEDERAL AID PROJECT NO.			SHEET NO.
6	MG 2002 (243)			787
DGN: JWS	STATE	DIST.	COUNTY	
CHK DGN:	TEXAS	14	WILLIAMSON	
DWG: RLM	CONT.	SECT.	JOB	HIGHWAY NO.
CHK DWG:	0683	01	069	SH 45

Pen Table: I:\Jobs\32058\techprod\UTIL\plots\32058uh.pen
Design Filename: I:\Jobs\32058\TECHPROD\UTIL\Dwg\phs1\45wep12.dgn

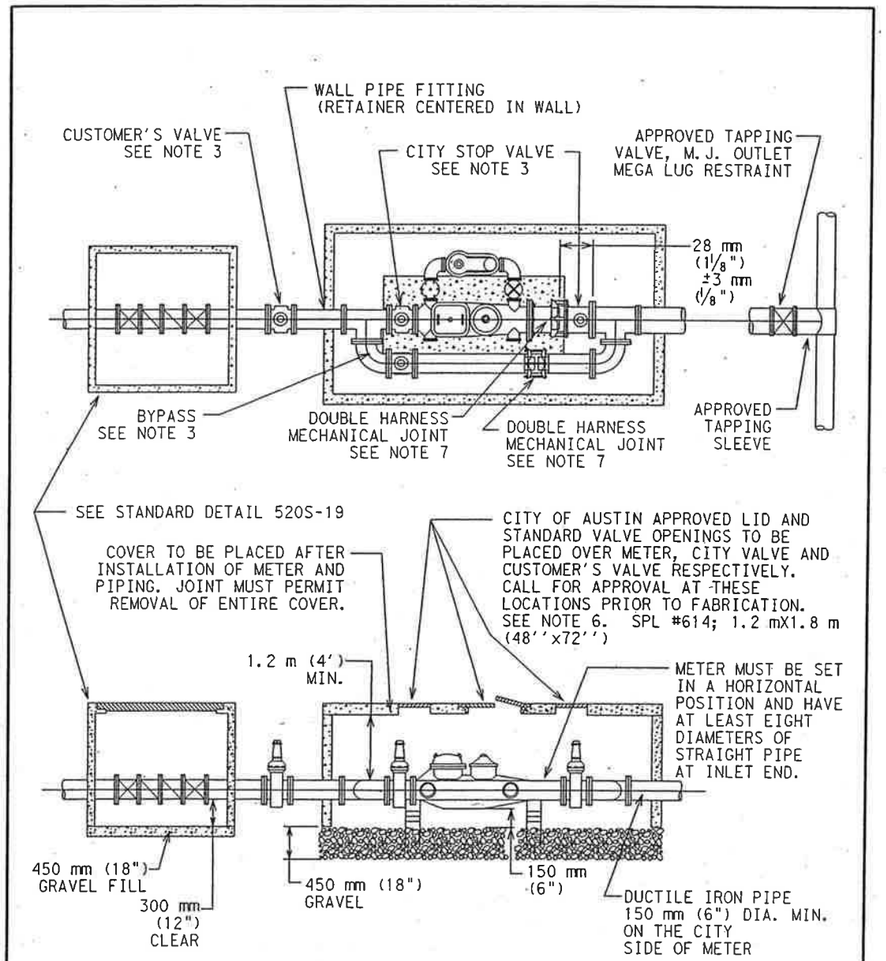

CITY OF AUSTIN WATER AND WASTEWATER UTILITY	FIRE LINE METER INSTALLATION	
RECORD COPY SIGNED BY KATHI L. FLOWERS 9/23/02 ADOPTED	THE ARCHITECT/ENGINEER ASSUMES RESPONSIBILITY FOR APPROPRIATE USE OF THIS STANDARD.	STANDARD NO. 520S-17 1 OF 5

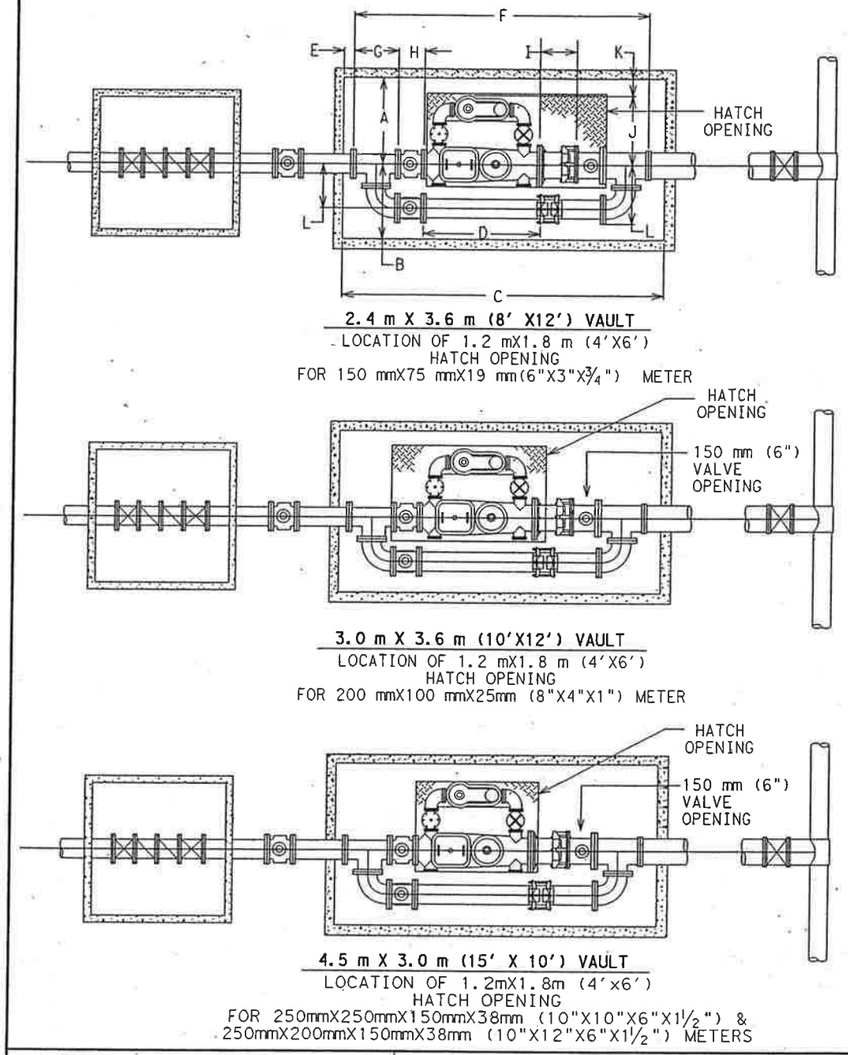

2.4 m X 3.6 m (8' X12') VAULT
LOCATION OF 1.2 mX1.8 m (4'X6')
HATCH OPENING
FOR 150 mmX75 mmX19 mm(6"X3"X¾") METER

3.0 m X 3.6 m (10'X12') VAULT
LOCATION OF 1.2 mX1.8 m (4'X6')
HATCH OPENING
FOR 200 mmX100 mmX25mm (8"X4"X1") METER

4.5 m X 3.0 m (15' X 10') VAULT
LOCATION OF 1.2mX1.8m (4'x6')
HATCH OPENING
FOR 250mmX250mmX150mmX38mm (10"X10"X6"X1½") &
250mmX200mmX150mmX38mm (10"X12"X6"X1½") METERS

CITY OF AUSTIN WATER AND WASTEWATER UTILITY	FIRE LINE METER INSTALLATION	
RECORD COPY SIGNED BY KATHI L. FLOWERS 9/23/02 ADOPTED	THE ARCHITECT/ENGINEER ASSUMES RESPONSIBILITY FOR APPROPRIATE USE OF THIS STANDARD.	STANDARD NO. 520S-17 2 OF 5

STATE OF TEXAS
JOHN W. STRYBOS
64259
LICENSED
PROFESSIONAL ENGINEER
3/19/2003

MASTER METER STATION DETAILS

SH 45 / US 183 INTERCHANGE

HNTB ARCHITECTS ENGINEERS PLANNERS
The HNTB Companies

Texas Department of Transportation
© 2003 TEXAS TURNPIKE AUTHORITY DIVISION

DRAWING PREPARED BY: HNTB CORPORATION			CITY OF AUSTIN SHEET NO.
			A68
FED. RD. DIV. NO.	FEDERAL AID PROJECT NO.		SHEET NO.
6	NG 2002 (243)		787A
DGN JWS	STATE	DIST.	COUNTY
CHK DGN	TEXAS	14	WILLIAMSON
DWG RLM	CONT.	SECT.	JOB / HIGHWAY NO.
CHK DWG	0683	01	069 / SH 45

METER AND BOX DIMENSIONS (mm)

WATER METER	A	B	C	D	E	F	G	H	I	J	K	L
150 X 75	1.5m	900	3.6m	1.1m	375	2.9m	400	263	325	675	825	550
200 X 100	1.8m	1.2m	3.6m	2.1m	200	3.2m	450	288	325	825	975	625
250 X 250 X 150	1.8m	1.2m	4.5m	1.7m	325	3.9m	550	325	325	1.0m	750	750
250 X 300 X 150	1.8m	1.2m	4.5m	1.7m	250	4.0m	600	350	325	1.0m	750	850

METER AND BOX DIMENSIONS (INCHES)

WATER METER	A	B	C	D	E	F	G	H	I	J	K	L
6 X 3	60	36	144	45	15	114	16	10½	13	27	33	22
8 X 4	72	48	144	53	8	127	18	11½	13	33	39	25
10 X 10 X 6	72	48	180	68	13	154	22	13	13	42	30	30
10 X 12 X 6	72	48	180	68	10	160	24	14	13	42	30	34

WATER METER	SIZE OF BY-PASS	BY-PASS VALVE W/HANDWHEEL	MAIN LINE VALVE WITH SQUARE OPERATING NUT
150 mm X 75 mm (6" X 3")	150 mm (6")	150 mm (6")	150 mm (6")
200 mm X 100 mm (8" X 4")	200 mm (8")	200 mm (8")	200 mm (8")
250mmX250mmX150mm (10"X10"X6")	250 mm (10")	250 mm (10")	250 mm (10")
250mmX300mmX150mm (10"X12"X6")	300 mm (12")	300 mm (12")	300 mm (12")

CITY OF AUSTIN WATER AND WASTEWATER UTILITY	FIRE LINE METER INSTALLATION	
RECORD COPY SIGNED BY KATHI L. FLOWERS 9/23/02 ADOPTED	THE ARCHITECT/ENGINEER ASSUMES RESPONSIBILITY FOR APPROPRIATE USE OF THIS STANDARD.	STANDARD NO. 520S-17 3 OF 5

MINIMUM NUMBER OF TIE RODS

PIPE SIZE, inches	Working Pressure, psi (a)					
	50	75	100	125	150	200
3, 4, & 6	2	2	2	2	2	2
8	2	2	2	2	4	4
10	2	2	4	4	4	6
12	2	4	4	4	6	6
14	2	4	4	6	8	10
16	4	4	6	8	8	12
18	4	6	8	10	10	(b)
20	4	6	8	10	12	(b)
24	6	10	12	16	(b)	(b)
30	6	8	10	12	14	18
36	8	10	14	16	20	(b)
42	6	8	12	14	16	(22)
48	8	10	14	18	20	(28)

MINIMUM NUMBER OF TIE RODS

PIPE SIZE, mm	Working Pressure, kPa (a)					
	0.3	0.5	0.7	0.9	1.1	1.3
75, 100, 150	2	2	2	2	2	2
200	2	2	2	2	4	4
250	2	2	4	4	4	6
300	2	4	4	4	6	6
350	2	4	4	6	8	10
400	4	4	6	8	8	12
450	4	6	8	10	10	(b)
500	4	6	8	10	12	(b)
600	6	10	12	16	(b)	(b)
750	6	8	10	12	14	18
900	8	10	14	16	20	(b)
1.0 m	6	8	12	14	16	(22)
1.2 m	8	10	14	18	20	(28)

(a) BASED UPON TEST PRESSURE NOT MORE THAN 50% HIGHER THAN WORKING PRESSURE.

(b) REQUIRED NUMBER EXCEEDS NUMBER OF HOLES IN STANDARD MECHANICAL JOINT. USE OTHER METHODS OF HARNESSING.

CITY OF AUSTIN WATER AND WASTEWATER UTILITY	FIRE LINE METER INSTALLATION	
RECORD COPY SIGNED BY KATHI L. FLOWERS 9/23/02 ADOPTED	THE ARCHITECT/ENGINEER ASSUMES RESPONSIBILITY FOR APPROPRIATE USE OF THIS STANDARD.	STANDARD NO. 520S-17 4 OF 5

John W. Strybos
STATE OF TEXAS
JOHN W. STRYBOS
64259
LICENSED
PROFESSIONAL ENGINEER
3/19/2003

MASTER METER STATION DETAILS

SH 45 / US 183 INTERCHANGE

HNTB ARCHITECTS ENGINEERS PLANNERS
The HNTB Companies

Texas Department of Transportation

© 2003 TEXAS TURNPIKE AUTHORITY DIVISION

DRAWING PREPARED BY: HNTB CORPORATION			CITY OF AUSTIN SHEET NO.
			A69
FED. RD. DIV. NO.	FEDERAL AID PROJECT NO.		SHEET NO.
6	MG 2002 (243)		787B
DSN: JWS	STATE	DIST.	COUNTY
CHK DSN:	TEXAS	14	WILLIAMSON
DWG: RLM	CONT.	SECT.	JOB / HIGHWAY NO.
CHK DWG:	0683	01	069 / SH 45

NOTES:

1. PIPE AND METER SIZE SHALL BE AS DETERMINED BY OWNER; APPROVAL BY WATERSHED PROTECTION AND DEVELOPMENT REIVEW AND FIRE DEPARTMENTS. PLANS MUST BE PREPARED BY LICENSED ENGINEER IF INSTALLATION IN RIGHT-OF-WAY IS BY OTHER THAN CITY FORCES.
2. METER VAULT MUST BE BEHIND CURB AND/OR WALK AND OUT OF VEHICULAR TRAFFIC.
3. MAIN LINE AND BYPASS VALVES WILL BE RESILIENT SEAT TYPE WITH CORROSION RESISTANT FUSION BANDED EPOXY COATING INSIDE AND OUTSIDE, NON-RISING STEM. MAIN LINE VALVES SHALL HAVE SQUARE OPERATING NUTS. BYPASS VALVE WILL HAVE A HANDWHEEL. PROPERTY OWNER'S VALVE MUST BE LOCATED OUTSIDE OF THE CITY OF AUSTIN METER VAULT.
4. APPROVAL WILL BE NEEDED IF HEIGHT OF VAULT EXCEEDS 1.8 m (72"), CALL THE PIPELINE ENGINEERING DIVISION. METER MUST BE MODIFIED TO READ FROM TOP OF VAULT.
5. HATCH OPENING WILL BE 1.2 m X 1.8 m (4'X6') DOUBLE LEAF. (H20 LOADING REQUIRED).
6. IRON PIPE TAPPING SLEEVE IN STREET RIGHT-OF-WAY SHALL BE IMBEDDED IN GRANULAR MATERIALS AS REQUIRED BY CITY OF AUSTIN STANDARD SPECIFICATIONS 510.3 (14); BACKFILL ABOVE GRANULAR BEDDING AS REQUIRED BY 510.3 (25).
7. DOUBLE HARNESS MJ WITH TIE RODS. ALL OTHER FITTINGS INSIDE VAULT WILL BE FLANGED.
8. IF METER VAULT IS TO BE POURED IN PLACE OR PRECAST IF AVAILABLE IN THE PROPER SIZE, CONSTRUCTION PLANS MUST BE PREPARED BY REGISTERED PROFESSIONAL ENGINEER. (H20 LOADING REQUIRED).
9. NOTCHES WHERE PIPING GOES THROUGH VAULT SHALL BE FILLED WITH MORTAR.
10. THE TOP OF THE METER VAULT SHALL BE AT AN ELEVATION SUCH THAT THE SURROUNDING GROUND SLOPES AWAY FROM THE VAULT.

CITY OF AUSTIN WATER AND WASTEWATER UTILITY		FIRE LINE METER INSTALLATION	
RECORD COPY SIGNED BY KATHI L. FLOWERS	9/23/02 ADOPTED	THE ARCHITECT/ENGINEER ASSUMES RESPONSIBILITY FOR APPROPRIATE USE OF THIS STANDARD.	STANDARD NO. 520S-17 5 OF 5

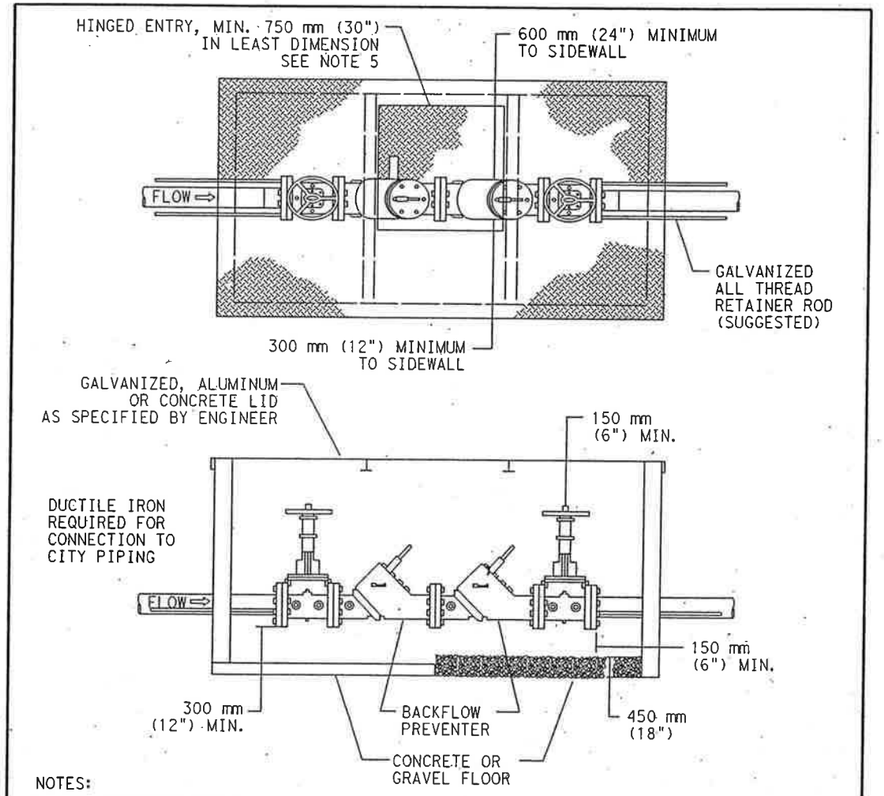

NOTES:

1. ALL BACKFLOW PREVENTION ASSEMBLIES SHALL HAVE LAB AND FIELD APPROVAL FROM THE UNIVERSITY OF SOUTHERN CALIFORNIA FOUNDATION FOR CROSS CONNECTION CONTROL AND HYDRAULIC RESEARCH.
2. ALL TEST COCKS MUST BE REDIRECTED UPWARD AND PLUGGED.
3. BACKFLOW PREVENTION ASSEMBLIES SHALL BE INSTALLED IN THE UPRIGHT HORIZONTAL POSITION, ULESS OTHERWISE APPROVED. BACKFLOW PREVENTION ASSEMBLIES SHALL NOT BE ROTATED ON THEIR AXIS.
4. CLEARANCE SHALL BE AS INDICATED IN THE STANDARD AND CROSS CONNECTION ORDINANCES.
5. ACCESS OPENING MUST BE LARGE ENOUGH TO REMOVE LARGEST PORTION OF BACKFLOW PREVENTER, BUT NOT LESS THAN 750 mm (30") IN LEAST DIMENSION.
6. TEST AND MAINTENANCE REPORT SHALL BE RECEIVED BY THE WATER AND WASTEWATER UTILITY'S SPECIAL SERVICE DIVISION WITHIN 5 DAYS AFTER BEING INSTALLED.

CITY OF AUSTIN WATER AND WASTEWATER UTILITY		STANDARD BACKFLOW PREVENTOR ON FIRE LINE WITH MASTER METER	
RECORD COPY SIGNED BY KATHI L. FLOWERS	9/23/02 ADOPTED	THE ARCHITECT/ENGINEER ASSUMES RESPONSIBILITY FOR APPROPRIATE USE OF THIS STANDARD.	STANDARD NO. 520-19B

JOHN W. STRYBOS
64259
LICENSED PROFESSIONAL ENGINEER
STATE OF TEXAS
3/7/2003

MASTER METER STATION DETAILS

SH 45 / US 183 INTERCHANGE

HNTB ARCHITECTS ENGINEERS PLANNERS
The HNTB Companies

Texas Department of Transportation

© 2003 TEXAS TURNPIKE AUTHORITY DIVISION

DRAWING PREPARED BY: HNTB CORPORATION			CITY OF AUSTIN SHEET NO.
			A70
FED. RD. DIV. NO.	FEDERAL AID PROJECT NO.		SHEET NO.
6	MG 2002 (243)		787C
DGN: JWS	STATE	DIST.	COUNTY
CHK DGN:	TEXAS	14	WILLIAMSON
DWG: RLM	CONT.	SECT.	JOB / HIGHWAY NO.
CHK DWG:	0683	01	069 / SH 45

Scale: 20.000000:1.000000
Plotted on: 18-MAR-2003 10:19
Pen Table: I:\Jobs\32058\TECHPROD\UTIL\Plots\32058uh.pen
Design Filename: I:\Jobs\32058\TECHPROD\UTIL\Dwg\PHS1\45wep08.dgn

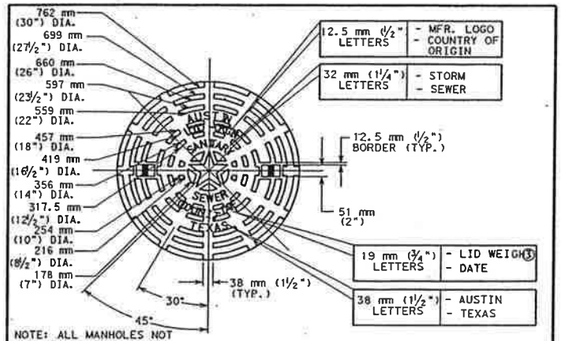

LID PLAN VIEW

NOTE: ALL MANHOLES NOT LOCATED IN PAVED AREAS SHALL HAVE BOLTED COVERS AS PER SPEC. 506S, SECTION 506S.3, MATERIALS AND COMPONENTS, ITEMS M & N.

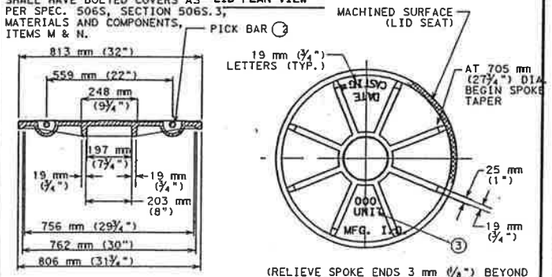

LID SECTION VIEW

(RELIEVE SPOKE ENDS 3 mm (⅛") BEYOND LID FOR SEAT MACHINING PURPOSES)

LID SECTION VIEW

CITY OF AUSTIN WATER AND WASTEWATER UTILITY	SANITARY SEWER MANHOLE RING AND 813 mm (32") COVER
RECORD COPY SIGNED BY KATHI L. FLOWERS 9/23/02 ADOPTED	THE ARCHITECT/ENGINEER ASSUMES RESPONSIBILITY FOR APPROPRIATE USE OF THIS STANDARD. STANDARD NO. 503S-4W 1 OF 3

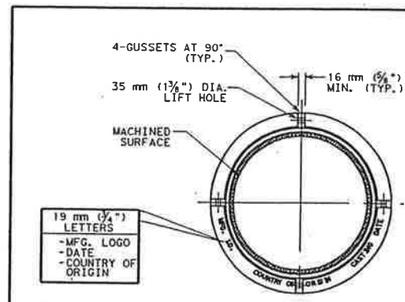

MANHOLE RING

NOTE: ALL MANHOLES NOT LOCATED IN PAVED AREAS SHALL HAVE BOLTED COVERS AS PER SPEC. 506S, SECTION 506S.3, MATERIALS AND COMPONENTS, ITEMS M & N.

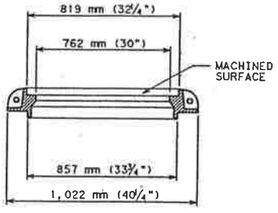

RING SECTION

CITY OF AUSTIN WATER AND WASTEWATER UTILITY	SANITARY SEWER MANHOLE RING AND 813 mm (32") COVER
RECORD COPY SIGNED BY KATHI L. FLOWERS 9/23/02 ADOPTED	THE ARCHITECT/ENGINEER ASSUMES RESPONSIBILITY FOR APPROPRIATE USE OF THIS STANDARD. STANDARD NO. 503S-4W 2 OF 3

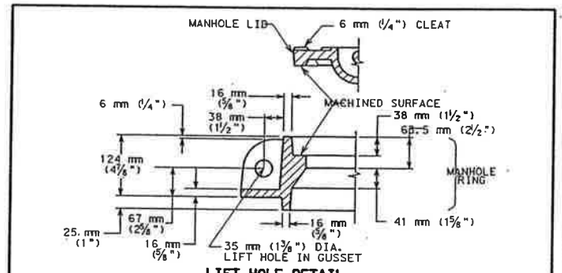

LIFT HOLE DETAIL

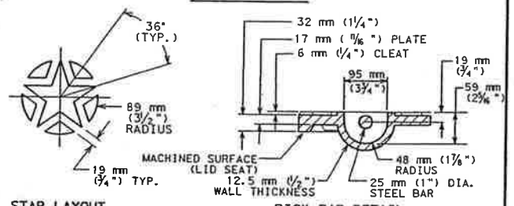

STAR LAYOUT PICK BAR DETAIL

NOTES:
① ALL CORNERS AND EDGES SHALL HAVE A 1.5 mm (1/16") MINIMUM RADIUS.
② LIDS SHALL BE CAST WITH TWO 25 mm (1") DIA. STEEL PICK BARS.
③ LID WEIGHTS SHALL BE 935 N (210 LBS.) FOR CAST IRON OR 779 N (175 LBS.) FOR DUCTILE IRON. WEIGHT SHALL BE CAST ON BOTH TOP AND BOTTOM OF LID.
④ MANUFACTURER SHALL PROVIDE INDEPENDENT TESTING LABORATORY REPORT ON 40,000 POUND PROOF LOAD TEST CONDUCTED ACCORDING TO AASHTO M-306.
⑤ FILLETS SHALL BE 6 mm (¼") RADIUS UNLESS OTHERWISE SPECIFIED.
⑥ MANUFACTURER SHALL REMOVE EXCESS IRON AND MACHINE FINISH SEATING SURFACES TO NOTED DIMENSIONS.
NOTE: ALL MANHOLES NOT LOCATED IN PAVED AREAS SHALL HAVE BOLTED COVERS AS PER SPEC. 506S, SECTION 506S.3, MATERIALS AND COMPONENTS, ITEMS M & N.

CITY OF AUSTIN WATER AND WASTEWATER UTILITY	SANITARY SEWER MANHOLE RING AND 813 mm (32") COVER
RECORD COPY SIGNED BY KATHI L. FLOWERS 9/23/02 ADOPTED	THE ARCHITECT/ENGINEER ASSUMES RESPONSIBILITY FOR APPROPRIATE USE OF THIS STANDARD. STANDARD NO. 503S-4W 3 OF 3

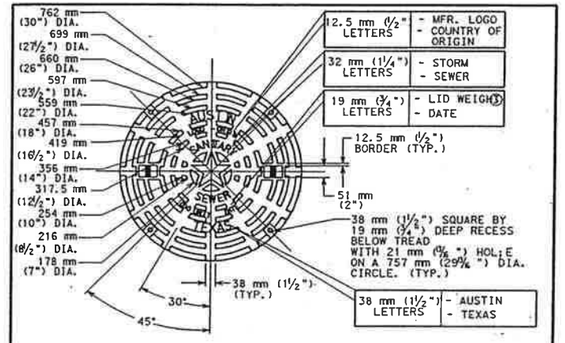

LID PLAN VIEW

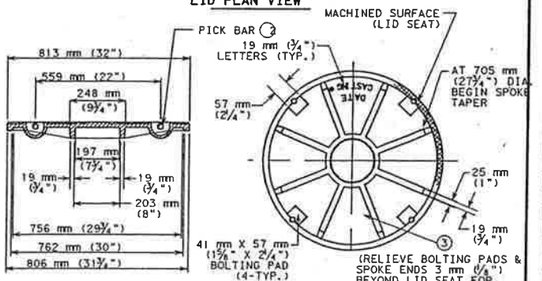

LID SECTION VIEW

(RELIEVE BOLTING PADS & SPOKE ENDS 3 mm (⅛") BEYOND LID SEAT FOR MACHINING PURPOSES)

LID SECTION VIEW

CITY OF AUSTIN WATER AND WASTEWATER UTILITY	WATERTIGHT MANHOLE RING AND 813 mm (32") COVER
RECORD COPY SIGNED BY KATHI L. FLOWERS 9/23/02 ADOPTED	THE ARCHITECT/ENGINEER ASSUMES RESPONSIBILITY FOR APPROPRIATE USE OF THIS STANDARD. STANDARD NO. 503S-5W 1 OF 3

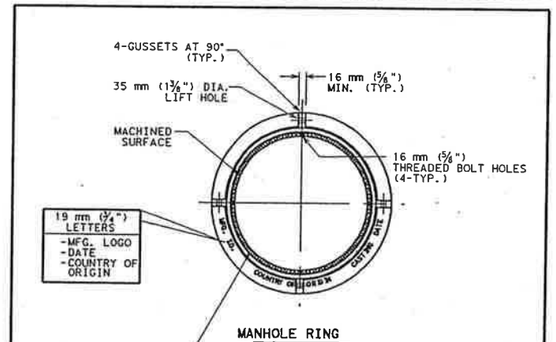

MANHOLE RING

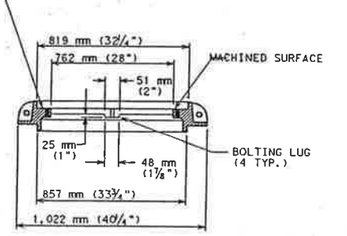

NOTE: ALL MANHOLES NOT LOCATED IN PAVED AREAS SHALL HAVE BOLTED COVERS AS PER SPEC. 506S, SECTION 506S.3, MATERIALS AND COMPONENTS, ITEMS M & N.

RING SECTION

CITY OF AUSTIN WATER AND WASTEWATER UTILITY	WATERTIGHT MANHOLE RING AND 813 mm (32") COVER
RECORD COPY SIGNED BY KATHI L. FLOWERS 9/23/02 ADOPTED	THE ARCHITECT/ENGINEER ASSUMES RESPONSIBILITY FOR APPROPRIATE USE OF THIS STANDARD. STANDARD NO. 503S-5W 2 OF 3

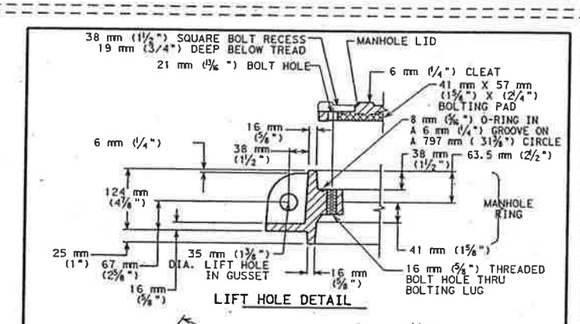

LIFT HOLE DETAIL

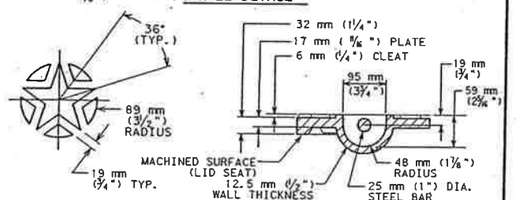

STAR LAYOUT PICK BAR DETAIL

NOTES:
① ALL CORNERS AND EDGES SHALL HAVE A 1.5 mm (1/16") MINIMUM RADIUS.
② LIDS SHALL BE CAST WITH TWO 25 mm (1") DIA. STEEL PICK BARS.
③ LID WEIGHTS SHALL BE 935 N (210 LBS.) FOR CAST IRON OR 779 N (175 LBS.) FOR DUCTILE IRON. WEIGHT SHALL BE CAST ON BOTH TOP AND BOTTOM OF LID.
④ MANUFACTURER SHALL PROVIDE INDEPENDENT TESTING LABORATORY REPORT ON 40,000 POUND PROOF LOAD TEST CONDUCTED ACCORDING TO AASHTO M-306.
⑤ FILLETS SHALL BE 6 mm (¼") RADIUS UNLESS OTHERWISE SPECIFIED.
⑥ MANUFACTURER SHALL REMOVE EXCESS IRON AND MACHINE FINISH SEATING SURFACES TO NOTED DIMENSIONS.
⑦ BOLTS SHALL BE 16 mm X 44 mm (⅝" × 1¾" × 11 N.C.) STAINLESS STEEL HEX HEAD (TYPE 316).

CITY OF AUSTIN WATER AND WASTEWATER UTILITY	WATERTIGHT MANHOLE RING AND 813 mm (32") COVER
RECORD COPY SIGNED BY KATHI L. FLOWERS 9/23/02 ADOPTED	THE ARCHITECT/ENGINEER ASSUMES RESPONSIBILITY FOR APPROPRIATE USE OF THIS STANDARD. STANDARD NO. 503S-5W 3 OF 3

John W. Strybos

STATE OF TEXAS
JOHN W. STRYBOS
64259
LICENSED
PROFESSIONAL ENGINEER
3/19/2003

WASTEWATER STANDARDS

SH 45 / US 183 INTERCHANGE

HNTB ARCHITECTS ENGINEERS PLANNERS
The HNTB Companies

Texas Department of Transportation
© 2003 TEXAS TURNPIKE AUTHORITY DIVISION

DRAWING PREPARED BY: HNTB CORPORATION			CITY OF AUSTIN SHEET NO.
SHEET 1 OF 1			A71
FED. RD. DIV. NO.	FEDERAL AID PROJECT NO.		SHEET NO.
6	MG 2002 (243)		788

DGN: JEG	STATE	DIST.	COUNTY
CHK DSN: JWS	TEXAS	14	WILLIAMSON
DWN: JEG	CONT.	SECT.	JOB	HIGHWAY NO.
CHK DTL: JWS	0683	01	069	SH 45

Scale: 20.000000:1.000000
Plotted on: 18-MAR-2003 10:19

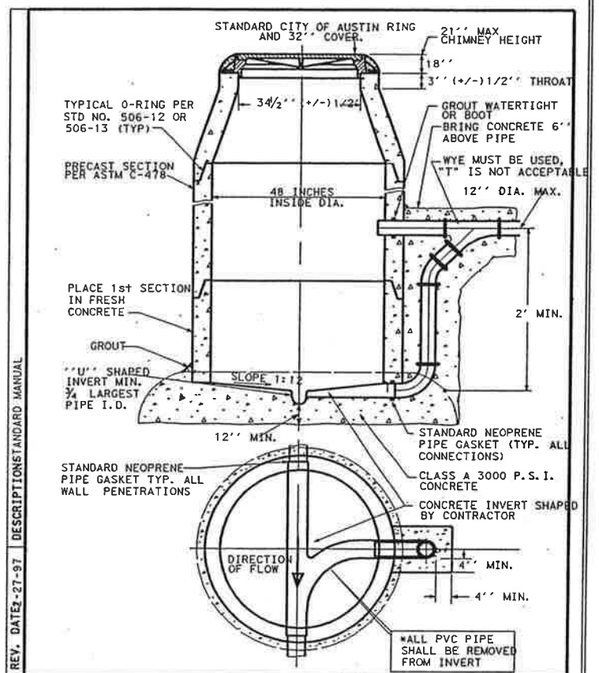

REV. DATE: 2-27-97 | DESCRIPTION: STANDARD MANUAL

CITY OF AUSTIN WATER AND WASTEWATER UTILITY	PRECAST MANHOLE WITH DROP INLET ON CAST IN PLACE FOUNDATION
APPROVED DATE	ADOPTED: 8-23-96
	SCALE: N.T.S.
	INITIAL: LLKM
	STANDARD NO. 506-7

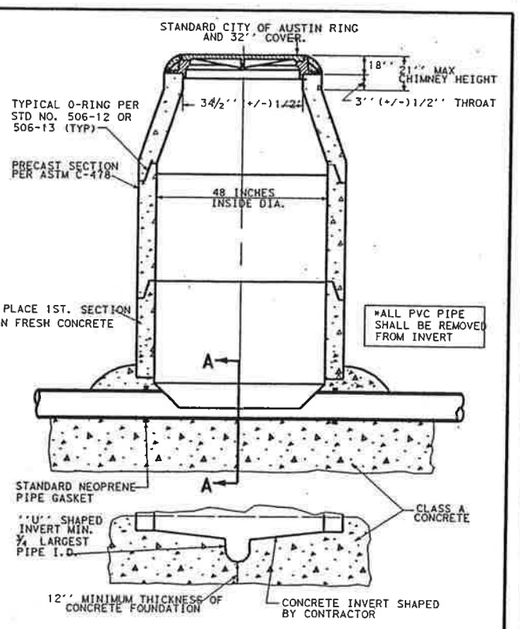

REV. DATE: 2-27-97 | DESCRIPTION: STANDARD MANUAL

CITY OF AUSTIN WATER AND WASTEWATER UTILITY	PRECAST MANHOLE ON CAST-IN-PLACE FOUNDATION
APPROVED DATE	ADOPTED: 8-23-96
	SCALE: N.T.S.
	INITIAL: LLKM
	STANDARD NO. 506-9

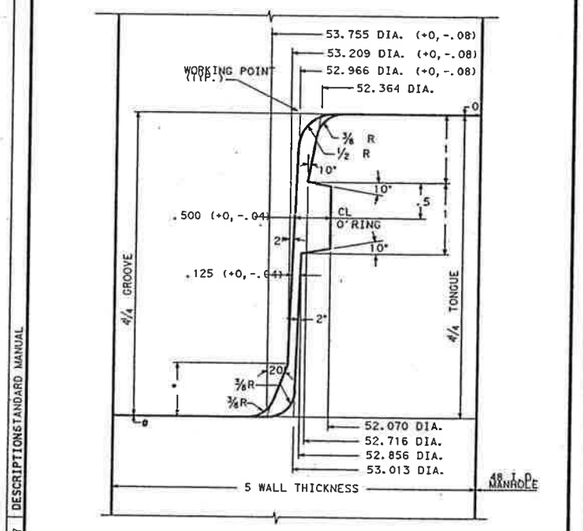

NOTES:
1. ALL DIMENSIONS IN INCHES.
2. O'RING DIMENSION 25/26 INCH DIA. (1013 CC VOLUME).
3. DRAWING NOT TO SCALE FOR CLARIFICATION OF DIMENSIONS.

REV. DATE: 2-27-97 | DESCRIPTION: STANDARD MANUAL

CITY OF AUSTIN WATER AND WASTEWATER UTILITY	O'RING JOINT DETAIL PRECAST MANHOLE SECTION
APPROVED DATE	ADOPTED: 5-2-89
	SCALE: N.T.S.
	INITIAL: RLC
	STANDARD NO. 506-12

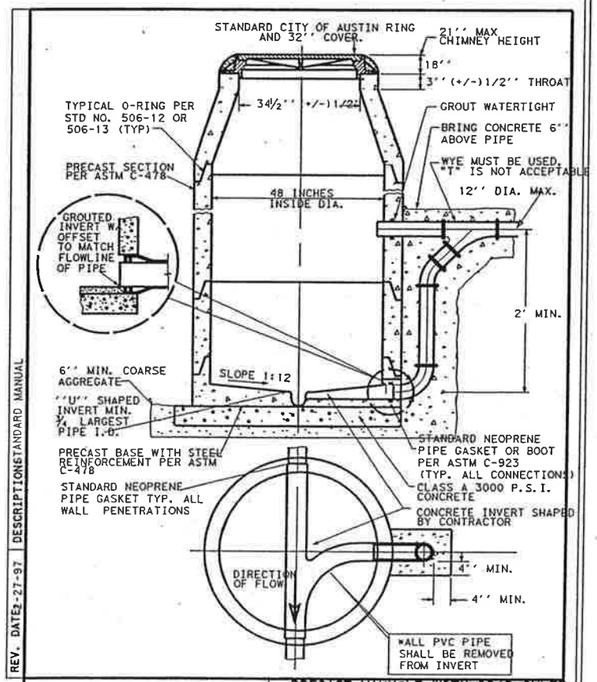

REV. DATE: 2-27-97 | DESCRIPTION: STANDARD MANUAL

CITY OF AUSTIN WATER AND WASTEWATER UTILITY	PRECAST MANHOLE WITH DROP INLET ON PRECAST BASE
APPROVED DATE	ADOPTED: 8-23-96
	SCALE: N.T.S.
	INITIAL: LLKM
	STANDARD NO. 506-8

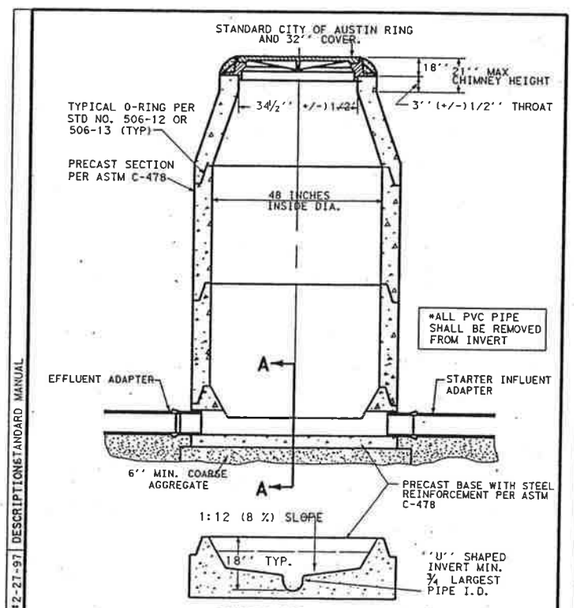

TYPICAL PRECAST BASE

NOTE:
THE MANHOLE BASE SHALL BE BEDDED ON 6'' CRUSHED STONE. THE CONTRACTOR SHALL LEVEL AND PLUMB THE BASE PRIOR TO SETTING THE PRECAST MANHOLE RISER SECTIONS ON THE PRECAST CONCRETE BASE.

REV. DATE: 2-27-97 | DESCRIPTION: STANDARD MANUAL

CITY OF AUSTIN WATER AND WASTEWATER UTILITY	WASTEWATER MANHOLE ON PRECAST BASE
APPROVED DATE	ADOPTED: 8-23-96
	SCALE: N.T.S.
	INITIAL: JC
	STANDARD NO. 506-10

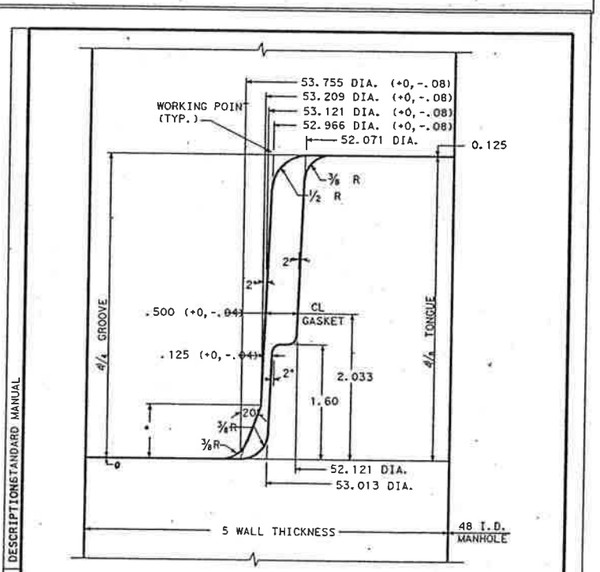

NOTES:
1. ALL DIMENSIONS IN INCHES.
2. DRAWING NOT TO SCALE FOR CLARIFICATION OF DIMENSIONS.
3. GASKET STRECH MIN 10% MAX 15%.

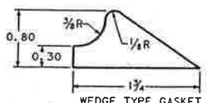

REV. DATE: 2-27-97 | DESCRIPTION: STANDARD MANUAL

CITY OF AUSTIN WATER AND WASTEWATER UTILITY	WEDGE - SEAL JOINT DETAIL PRECAST MANHOLE SECTION
APPROVED DATE	ADOPTED: 5-2-89
	SCALE: N.T.S.
	INITIAL: RLC
	STANDARD NO. 506-13

John W. Strybos
STATE OF TEXAS
JOHN W. STRYBOS
64259
LICENSED
PROFESSIONAL ENGINEER
3/19/2003

WASTEWATER STANDARDS

SH 45 / US 183 INTERCHANGE

HNTB ARCHITECTS ENGINEERS PLANNERS
The HNTB Companies

Texas Department of Transportation
© 2003 TEXAS TURNPIKE AUTHORITY DIVISION

DRAWING PREPARED BY: HNTB CORPORATION				CITY OF AUSTIN SHEET NO.
SHEET 1 OF 1				A72
FED. RD. DIV. NO.	FEDERAL AID PROJECT NO.			SHEET NO.
6	MG 2002 (243)			789
DSN: JEG	STATE	DIST.	COUNTY	
CHK DSN: JWS	TEXAS	14	WILLIAMSON	
DWN: JEG	CONT.	SECT.	JOB	HIGHWAY NO.
CHK DWN: JWS	0683	01	069	SH 45

Pen Table: I:\Jobs\32058\TECHPROD\UTIL\PlotTable\32058Uh.pen
Design Filename: I:\Jobs\32058\TECHPROD\UTIL\Dwg\PHS1\45wep09.dgn

Scale: 20.000000:1.000000
Plotted on: 18-APR-2003 11:12

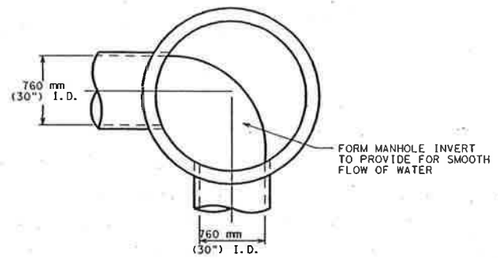

TYPICAL MANHOLE AT ANGLE IN STORM DRAIN

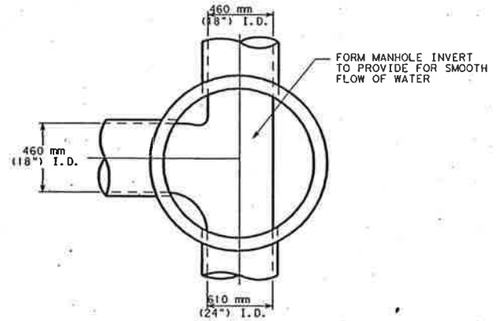

TYPICAL JUNCTION MANHOLE

CITY OF AUSTIN DEPARTMENT OF WATERSHED PROTECTION AND DEVELOPMENT REVIEW	MANHOLE INVERT PLAN	
RECORD COPY SIGNED BY GEORGE E. OSWALD 2/14/02 ADOPTED	THE ARCHITECT/ENGINEER ASSUMES RESPONSIBILITY FOR APPROPRIATE USE OF THIS STANDARD.	STANDARD NO. 506S-1

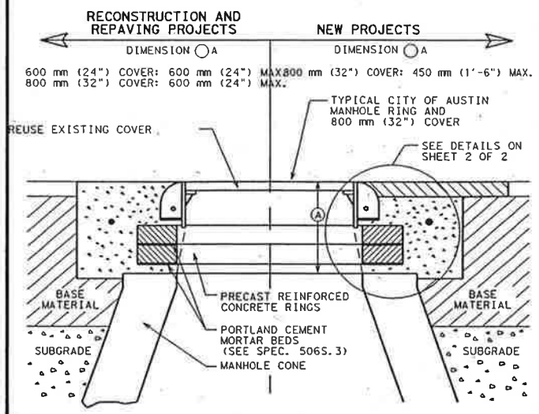

NOTES:
1. MORTAR BEDS SHALL NOT EXCEED 25 mm (1").
2. SUBGRADE AND BASE MATERIALS SHALL BE COMPACTED ACCORDING TO ITEMS 201S AND 210S, RESPECTIVELY, OF THE CITY OF AUSTIN STANDARD SPECIFICATIONS.
3. REFER TO STANDARD 1100S-1 FOR MISCELLANEOUS REPAIRS AROUND MANHOLES.

CITY OF AUSTIN WATER AND WASTEWATER UTILITY	NEW MANHOLE CONSTRUCTION AND MINOR MANHOLE ADJUSTMENT	
RECORD COPY SIGNED BY KATHI L. FLOWERS 8/8/00 ADOPTED	THE ARCHITECT/ENGINEER ASSUMES RESPONSIBILITY FOR APPROPRIATE USE OF THIS STANDARD.	STANDARD NO. 506S-4 1 OF 2

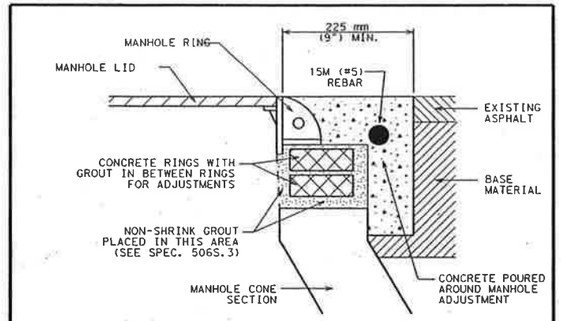

INSIDE PAVEMENT DETAIL

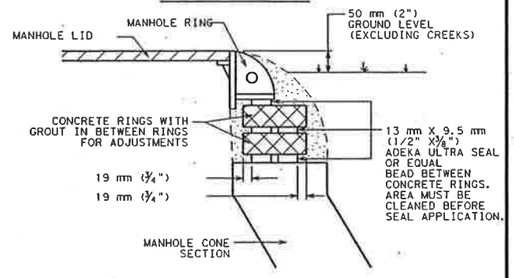

OUTSIDE PAVEMENT DETAIL

CITY OF AUSTIN WATER AND WASTEWATER UTILITY	NEW MANHOLE CONSTRUCTION AND MINOR MANHOLE ADJUSTMENT	
RECORD COPY SIGNED BY KATHI L. FLOWERS 8/8/00 ADOPTED	THE ARCHITECT/ENGINEER ASSUMES RESPONSIBILITY FOR APPROPRIATE USE OF THIS STANDARD.	STANDARD NO. 506S-4 2 OF 2

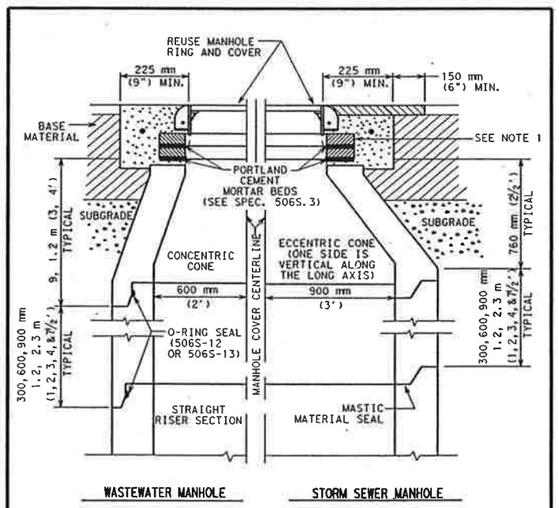

WASTEWATER MANHOLE STORM SEWER MANHOLE

1. SEE "MINOR MANHOLE ADJUSTMENTS" STANDARD 506S-4 FOR CLARITY.
2. MANHOLE SECTIONS TEMPORARILY REMOVED FOR ROADWAY CONSTRUCTION MAY BE REUSED ONLY WITH THE WRITTEN APPROVAL OF THE INSPECTOR. O-RINGS SHALL NOT BE REUSED.
3. ANY COMBINATION OF REMOVING THE CONCRETE RINGS, AND / OR THE MANHOLE CONE, AND/OR THE STRAIGHT RISER SECTION OF THE MANHOLE SHALL BE ACCEPTABLE TO TEMPORARILY LOWER THE MANHOLE GRADE FOR ROADWAY RECONSTRUCTION.
4. WHILE THE MANHOLE IS TEMPORARILY LOWERED, A SHEET OF STEEL SUITABLE TO SUPPORT ALL IMPOSED LOADS SHALL BE USED TO COVER THE OPENING. FOR WASTEWATER MANHOLES, THE STEEL PLATE SHALL BE SET IN MORTAR TO PREVENT LEAKAGE.
5. SUBGRADE AND BASE MATERIALS SHALL BE COMPACTED TO 95% AND 100% DENSITIES, RESPECTIVELY, COMPACTION SHALL BE BY MECHANICAL TAMPING TO THE DENSITIES SPECIFIED.

CITY OF AUSTIN WATER AND WASTEWATER UTILITY	MAJOR MANHOLE ADJUSTMENT	
RECORD COPY SIGNED BY KATHI L. FLOWERS 8/8/00 ADOPTED	THE ARCHITECT/ENGINEER ASSUMES RESPONSIBILITY FOR APPROPRIATE USE OF THIS STANDARD.	STANDARD NO. 506S-2

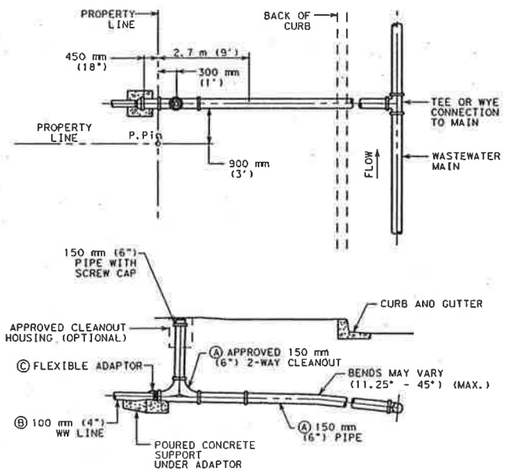

NOTES:

(A) TO BE INSTALLED AND INSPECTED DURING SUBDIVISION CONSTRUCTION.

(B) BUILDING INSPECTION DEPARTMENT SHALL INSPECT CUSTOMER'S WASTEWATER LINE, EXCEPT CONNECTION AT WYE, AND WATER LINE TO CUSTOMER'S SHUT-OFF-VALVE.

(C) TAPS INSPECTION OFFICE INSPECTS CONNECTIONS OF CUSTOMER'S WATER AND WASTEWATER LINES TO CITY SYSTEMS.

CITY OF AUSTIN WATER AND WASTEWATER UTILITY	SINGLE WASTEWATER SERVICE CONNECTION DETAIL	
RECORD COPY SIGNED BY KATHI L FLOWERS 9/23/02 ADOPTED	THE ARCHITECT/ENGINEER ASSUMES RESPONSIBILITY FOR APPROPRIATE USE OF THIS STANDARD.	STANDARD NO. 520S-3A 1 OF 2

NOTES:

1. UTILITY CONTRACTOR, DURING SUBDIVISION CONSTRUCTION, INSTALLS WASTEWATER CONNECTION TO MAIN, 150 mm (6") STUB WITH HORIZONTAL WYE FOR DOUBLE SERVICE, 150 mm (6") SERVICE BRANCH WITH 2-WAY CLEANOUT AND RISER FOR CLEANOUTS (CAPPED) AND PLUGS FOR BOTH 2-WAY CLEANOUTS AT PROPERTY LINE END. ALL WASTEWATER PIPING SHALL HAVE ELASTOMERIC GASKET TYPE JOINTS AND SHALL SLOPE DOWNWARD TO MAIN 12.3 mm PER METER (1/8" PER FOOT) MINIMUM TO 45° MAXIMUM. DEPTH OF SERVICE STUB AT PROPERTY LINE WILL BE SHOWN ON PLANS BY ENGINEER OR DESIGNATED REPRESENTATIVE IF GREATER THAN 1.2 m (4'), OTHERWISE, THE INSTALLED DEPTH WILL TYPICALLY BE 1.2 TO 1.8 m (4 TO 6'). IF WASTEWATER SERVICE LINE TO MAIN REQUIRES DEFLECTION EX-CEEDING 45°, REFER TO DETAIL 520-6. UTILITY CONTRACTOR ALSO INSTALLS WATER CONNECTION TO MAIN WATER PIPE, FITTINGS AND VALVES INCLUDING STOP VALVE, REFER TO DETAIL 520S-8 FOR LOCATION OF STOP VALVES. ALL INSTALLATIONS SHALL BE MADE IN ACCORDANCE WITH INFORMATION SHOWN ON APPLICABLE STANDARD DRAWINGS AND WILL BE INSPECTED BY CITY OF AUSTIN CONSTRUCTION INSPECTION PERSONNEL.

2. CUSTOMERS REMOVE PLUGS FROM 2-WAY CLEANOUT, AT PROPERTY LINE, INSTALL MINIMUM 450 mm (18") LENGTH OF 150 mm (6") PIPE, INSTALL 100 mm (4") WASTE-WATER LINES (EXTEND 100mm (4") PIPE 150 mm (6") MINIMUM INTO 150 mm (6") PIPE AND JOINT WITH FLEXIBLE ADAPTOR SPL WW-354) AND CAST IN PLACE CONCRETE SUPPORT BLOCK UNDER THE FLEXIBLE ADAPTOR. BLOCK SHALL HAVE MINIMUM DIMENSIONS OF 150 mm (6") THICK AND 450 mm (18") WIDE AND EXTEND A MINIMUM OF 150 mm (6") BEYOND EITHER END OF ADAPTOR. IF WASTEWATER WILL NOT SATISFACTORILY FLOW BY GRAVITY TO SEWER MAIN ADJACENT TO PROPERTY, PUMP EQUIPMENT MUST BE PROVIDED BY THE CUSTOMER AS PART OF CUSTOMER'S WASTEWATER SYSTEM. ALSO, CUSTOMERS INSTALL WATER LINES INCLUDING FITTINGS AND VALVES ON BOTH SIDES OF METER, INSTALL METER BOXES AND COVERS, ALL IN ACCORDANCE WITH INFORMATION ON AAPLICABLE STANDARD DRAWING. A VENTED SPACER MAY BE USED TO ASSURE PROPER SPACING AND ALIGNMENT OF METER FITTINGS.

3. CUSTOMER IS RESPONSIBLE FOR METER BOX AND PIPING SYSTEM UNTIL METER IS INSTALLED AND WASTEWATER IS CONNECTED. ANY MISSING OR DAMAGED PARTS SHALL BE REINSTALLED BY CUSTOMER WHO SHALL GUARANTEE, FOR A PERIOD OF ONE (1) YEAR FROM DATE OF ACCEPTANCE, THAT CONNECTIONS TO CITY SYSTEMS ARE FREE FROM DEFECTS IN WORKMANSHIP OR MATERIALS. CUSTOMER ALSO HAS THE RESPONSIBILITY TO ASSURE THAT ALL VALVES AND STOPS, METER BOX AND 2-WAY CLEANOUTS REMAIN CLEAR OF SIDEWALKS AND OTHER OBSTRUCTIONS.

4. CITY OF AUSTIN ACTIVITY IS LIMITED TO INSTALLATION OF THE WATER METER AND INSPECTION OF CONNECTIONS TO THE CITY'S WATER AND WASTEWATER SYSTEMS. FOR MAINTENANCE PURPOSES, THE CITY'S RESPONSIBILITY ENDS AT THE CUSTOMER'S WATER CUT-OFF VALVE AND AT THE CUSTOMER'S WASTE-WATER CONNECTION TO THE 2-WAY CLEANOUT.

5. PIPING AND TUBING IN STREET RIGHT-OF-WAY AND IN EASEMENT AREA SHALL BE BEDDED IN GRANULAR MATERIALS AS REQUIRED BY CITY OF AUSTIN STANDARD SPECIFICATION SECTION 510.S (14); MATERIALS SHALL BE AS SPECIFIED IN 510.2 (2) (g) AND 510.2 (3) (b); BACKFILL ABOVE THE GRANULAR BEDDING SHALL BE AS REQUIRED BY SECTION 510.3 (25). SERVICE LINES IN THESE AREAS SHALL HAVE A MINIMUM COVER BELOW FINAL STREET GRADE OF 42"; ANY EXCEPTION MUST BE SPECIFICALLY APPROVED BY THE ENGINEER.

6. NO METER BOX SHALL BE SET IN SIDEWALK AREA WITHOUT WRITTEN APPROVAL FROM THE WATER AND WASTEWATER UTILITY.

CITY OF AUSTIN WATER AND WASTEWATER UTILITY	SINGLE WASTEWATER SERVICE CONNECTION DETAIL	
RECORD COPY SIGNED BY KATHI L FLOWERS 9/23/02 ADOPTED	THE ARCHITECT/ENGINEER ASSUMES RESPONSIBILITY FOR APPROPRIATE USE OF THIS STANDARD.	STANDARD NO. 520S-3A 2 OF 2

John W. Strybos
STATE OF TEXAS
JOHN W. STRYBOS
64259
LICENSED
PROFESSIONAL ENGINEER
4-18-2003

WASTEWATER STANDARDS

SH 45 / US 183 INTERCHANGE

HNTB ARCHITECTS ENGINEERS PLANNERS
The HNTB Companies

Texas Department of Transportation
© 2003 TEXAS TURNPIKE AUTHORITY DIVISION

DRAWING PREPARED BY: HNTB CORPORATION				CITY OF AUSTIN SHEET NO.
SHEET 1 OF 1				A73
FED. RD. DIV. NO.	FEDERAL AID PROJECT NO.			SHEET NO.
6	MG 2002 (243)			790
DSN: JEG	STATE	DIST.	COUNTY	
CHK. DSN: JWS	TEXAS	14	WILLIAMSON	
DWN: JEG	CONT.	SECT.	JOB	HIGHWAY NO.
CHK. DWG: JWS	0683	01	069	SH 45

Pen Table: I:\Jobs\32058\techprod\drawy\plots\32058h.pen
Design Filename: I:\Jobs\32058\TECHPROD\UTIL\Dwg\phs1\45wep10.dgn

Scale: 20.000000:1.000000
Plotted on: 18-MAR-2003 19:18

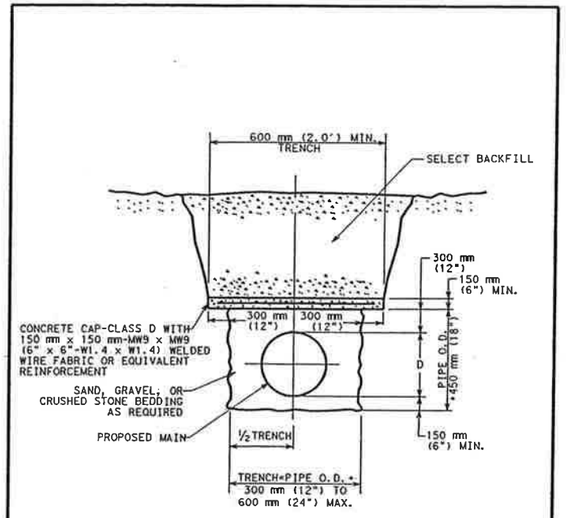

CITY OF AUSTIN WATER AND WASTEWATER UTILITY	CONCRETE TRENCH CAP	
RECORD COPY SIGNED BY KATHI F. PAYNE 2/17/00 ADOPTED	THE ARCHITECT/ENGINEER ASSUMES RESPONSIBILITY FOR APPROPRIATE USE OF THIS STANDARD.	STANDARD NO. 510S-1

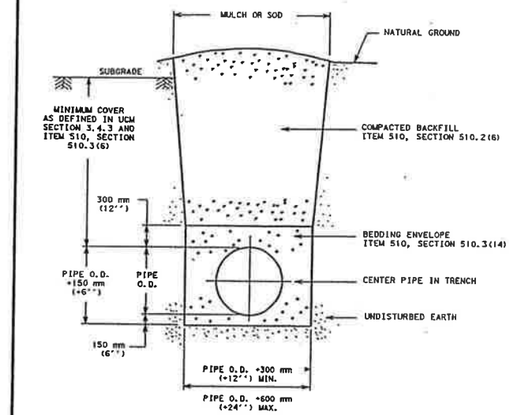

REFERENCES:

1. UTILITY CRITERIA MANUAL SECTION 3.4.3, "FINAL DESIGN"
2. STANDARD SPECIFICATION MANUAL ITEM 510, SECTION 510.2(6), "SELECT BACKFILL OR BORROW"; SECTION 510.3(6), "TRENCH DETAIL AND DEPTH OF COVER"; SECTION 510.3(14), "PIPE BEDDING ENVELOPE"

CITY OF AUSTIN DEPARTMENT OF PUBLIC WORKS	TYPICAL TRENCH DETAIL WITH UNFINISHED SURFACE	
RECORD COPY SIGNED BY LEON BARBA 8/19/02 ADOPTED	THE ARCHITECT/ENGINEER ASSUMES RESPONSIBILITY FOR APPROPRIATE USE OF THIS STANDARD.	STANDARD NO. 510S-5

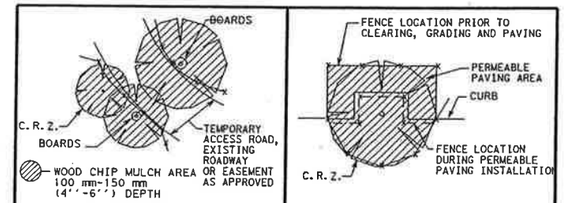

CITY OF AUSTIN WATERSHED PROTECTION DEPARTMENT	TREE PROTECTION FENCE LOCATIONS	
RECORD COPY SIGNED BY J. PATRICK MURPHY 11/15/99 ADOPTED	THE ARCHITECT/ENGINEER ASSUMES RESPONSIBILITY FOR APPROPRIATE USE OF THIS STANDARD.	STANDARD NO. 610S-1



NOTES:

1. THE EXISTING PAVING SURFACE SHALL BE SAW CUT IN A STRAIGHT LINE A MINIMUM OF 300 mm (12") WIDER THAN THE UNDISTURBED SIDES OF THE TRENCH, SYMETRICAL ABOUT THE CENTER LINE OF THE EXCAVATION.
2. ANY CONCRETE PAVING SHALL BE SAW CUT 150 mm (6") WIDER THAN UNDISTURBED SIDES OF EXCAVATION.
3. IF EXCAVATION AREA IS OPEN FOR TEMPORARY PUBLIC USE, THE SURFACE SHALL BE MAINTAINED LEVEL WITH ADJACENT RIDING SURFACE WITH COLD MIX OR TEMPORARY HOT MIX ASPHALTIC CONCRETE.
4. ROAD BASE AND SURFACE MATERIALS IN THE TRENCH CUT SHALL BE REPLACED IN KIND OF EQUAL THICKNESS, OR MINIMUM BASE THICKNESS OF 250 mm (10"), WHICHEVER IS GREATER.
5. ALL DAMAGED AREAS OF PAVEMENT OUTSIDE THE TRENCH CUT SHALL BE REMOVED AND REPLACED WITH MINIMUM OF 200 mm (8") OF BASE OR MATCH EXISTING THICKNESS, WHICHEVER IS GREATER.
6. SURFACE PAVEMENT SHALL BE OF THE KIND AND THICKNESS AS EXISTING, OR MINIMUM 50 mm (2"), WHICHEVER IS GREATER.

CITY OF AUSTIN WATER AND WASTEWATER UTILITY	TYPICAL TRENCH WITH PAVED SURFACE	
RECORD COPY SIGNED BY LEON BARBA 8/18/00 ADOPTED	THE ARCHITECT/ENGINEER ASSUMES RESPONSIBILITY FOR APPROPRIATE USE OF THIS STANDARD.	STANDARD NO. 510S-3

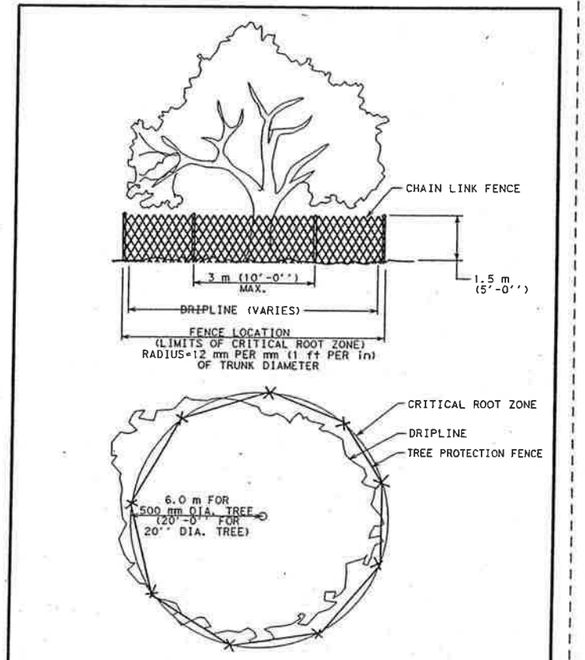

CITY OF AUSTIN WATERSHED PROTECTION DEPARTMENT	TREE PROPTECTION FENCE TYPE A - CHAIN LINK	
RECORD COPY SIGNED BY J. PATRICK MURPHY 11/15/99 ADOPTED	THE ARCHITECT/ENGINEER ASSUMES RESPONSIBILITY FOR APPROPRIATE USE OF THIS STANDARD.	STANDARD NO. 610S-2

Pen Table: \Jobs\32058\techprod\UTIL\plots\32058Uh.pen
Design Filename: \\barw00\pmwork\Jobs\32058\TECHPROD\Utils\Dwg\phase1\45sep11.dgn

JOHN W. STRYBOS
64259
LICENSED PROFESSIONAL ENGINEER
STATE OF TEXAS
3/19/2003

TRENCHING AND TREE PROTECTION STANDARDS

SH 45 / US 183 INTERCHANGE

HNTB ARCHITECTS ENGINEERS PLANNERS
The HNTB Companies

Texas Department of Transportation
© 2003 TEXAS TURNPIKE AUTHORITY DIVISION

DRAWING PREPARED BY: HNTB CORPORATION			CITY OF AUSTIN SHEET NO.
SHEET 1 OF 1			A74
FED. RD. DIV. NO.	FEDERAL AID PROJECT NO.		SHEET NO.
6	MG 2002 (243)		791
DSGN. JEG	STATE	DIST.	COUNTY
CHK. DSGN. JWS	TEXAS	14	WILLIAMSON
DWG. JEG	CONT.	SECT.	JOB / HIGHWAY NO.
CHK. DWG. JWS	0683	01	069 / SH 45

UTILITY QUANTITIES

ITEM	5968	5968	5968	5968	5968	5968	5968	5968	5968	5968	5968	5968	5968	5968	5968	5968	5968	5968	5968	
DESCR CODE	512			517	520															
DESCRIPTION	PIPE (PVC) (SCH 40) (2")	PIPE (PVC) (SCH 40) (4")	PIPE (DI) (6")	PIPE (DI) (8")	PIPE (DI) (16")	PIPE (16") (STEEL ENCASE)	PIPE (20") (STEEL ENCASE)	PIPE (28") (STEEL ENCASE)	VALVE (GATE) (2")	VALVE (GATE) (4")	VALVE (GATE) (6")	VALVE (GATE) (TYPE RS) (16")	WATER METER W/ BOX (4")	BACKFLOW PREVENTOR ASSY (2")	FIRE HYDRANT ASSY	REDUCER (8" X 4") (MJ) *	REDUCER (4" X 2") (MJ) *	PLUG (16") (MJ) *	TEE (16" X 16") (MJ) *	
UNIT	LF	LF	LF	LF	LF	LF	LF	LF	EA	EA	EA	EA	EA	EA	EA	EA	EA	EA	EA	
BP ML3 WATER LINE 'D3'					743			685				4						2	2	
BP ML3 WATER LINE 'D3A'			95	175.5			52				1				1					
BP ML3 WATER LINE 'D4'	177	570				548			1	1		1	1	1			2			
BPML3 WASTEWATER LINE 'A'							652													
BP ML3 WASTEWATER LAT 'A-1'							103									1				
BP ML3 WASTEWATER LAT 'A-2'							152									1				
BP ML3 SWBT																				
BP ML3 ITS																				
BP ML3 GAS																				
BP ML3 ELECTRIC																				
TOTALS	177	570	95	175.5	743	548	907	685	1	1	1	5	1	1	1	2	2	2	2	

UTILITY QUANTITIES

ITEM	5968	5968	5968	5968	5968	5968	5968	5968	5968	5968	5968	402	0618	0620	0624					
DESCR CODE												501	0514	0512	0501					
DESCRIPTION,	TEE (16"X 8") (MJ) *	TEE (16"X 4") (MJ) *	TEE (8"X 6") (MJ) *	TEE (4" X 4") (MJ) *	90° BEND (MJ) (6") *	90° BEND (MJ) (8") *	PIPE (SDR-26) (PVC) (8")	PIPE (SDR-26) (PVC) (12")	MANHOLE (COMPL) (4 FT)	DROP CONN (8") *	SEWER CLEANOUT (8") *	TRENCH EXCAV PROTECT	CONDUIT (PVC) (SCH 40) (4")	ELEC CONDUCTOR (NO. 2) (INSULATED	GROUND BOX TYPE D W/ APRON	PIPE (14") (STEEL ENCASE)	PIPE (16") (STEEL ENCASE)	STEEL GAS PIPE (1½")		
UNIT	EA	EA	EA	EA	EA	EA	LF	LF	EA	EA	EA	LF	LF	LF	EA	LF	LF	LF		
BP ML3 WATER LINE 'D3'	1											747								
BP ML3 WATER LINE 'D3A'			1		1	1														
BP ML3 WATER LINE 'D4'		1		1								1373								
BPML3 WASTEWATER LINE 'A'							1365	20	4	1										
BP ML3 WASTEWATER LAT 'A-1'							120			1	1									
BP ML3 WASTEWATER LAT 'A-2'							174								1					
BP ML3 SWBT													210				184			
BP ML3 ITS													970		2		970			
BP ML3 GAS																		245		
BP ML3 ELECTRIC													101			52	92			
														460	2					
TOTALS	1	1	1	1	1	1	1659	20	4	2	1	2120	1281	460	5	52	1794	245		

* FOR CONTRACTOR'S INFORMATION ONLY

UTILITY SERVICE CONNECTION SUMMARY

UTILITY	℄ SH 45 STATION	OFFSET***	TOTAL KILOWATTS
WATER LINE 'D3'	229+64	314	
WATER LINE 'D4'	229+14	314	
WASTEWATER LINE 'A'	226+46	952	
SWBT	227+56	-394	
ITS	230+89	253	
GAS	228+94	-380	
ELECTRIC	227+66	-394	

*** POSITIVE OFFSET IS RIGHT OF ℄ SH 45.
NEGATIVE OFFSET IS LEFT OF ℄ SH 45.

Texas Department of Transportation
© 2003 TEXAS TURNPIKE AUTHORITY DIVISION

HNTB ARCHITECTS ENGINEERS PLANNERS
The HNTB Companies

SH 45 TOLL PLAZAS

SUMMARY OF UTILITY SERVICES

BARRIER PLAZA ML3

DGN: DDD	FED. DIV. NO.	STATE	FEDERAL AID PROJECT NO.		HIGHWAY NO.	
CHK DGN: JWS	6	TEXAS	TTA 2002 (243)		LOOP1/SH45	
DWG: DDD	STATE DISTRICT	COUNTY	CONTROL NO.	SECTION NO.	JOB NO.	SHEET NO.
CHK DWG: JWS	14	TRAVIS/ WILLIAMSON	0683	01	069	5

Scale: 40.000000:1.000000
Plotted on: 18-APR-2003 14:23
Pen Tables: i:\jobs\33246\techprod\rdwy\plots\33246h.pen
Design Files: i:\jobs\33246\TECHPROD\Rdwy\DWG\DS009\45wbpuq01.dgn

Scale: 40.000000:1.000000
Plotted on: 14-APR-2003 15:09

Pen Table: I:\3246\TECHPROD\Utilities\Irrigation\PLOTS\3324HUTIL.pen
Design File: I:\Jobs\33246\TECHPROD\Utilities\Irrigation\SECTION8\83SUM#08.dgn

UTILITY QUANTITIES FOR IRRIGATION WATER CONNECTIONS

ITEM	5968	5968	5968	5968	5968	5968	5968	5968	5968	5968	5968	5968	5968	5968	5968	5968	5968	5968
DESCR CODE	512	534													537	536		
DESCRIPTION	PIPE (PVC) (SCH 40) (2")	WATER METER W/ BOX (2")	VALVE (GATE) (2")	REDUCER (16" X 4") (DI) *	REDUCER (12" X 4") (DI) *	REDUCER (4" X 2") (DI) *	REDUCER (12" X 4") *	BACKFLOW PREVENTOR (2") *	1/4 BEND (PVC) (2" X 2") *	1/8 BEND (PVC) (2" X 2") *	1/16 BEND (PVC) (2" X 2") *	1/32 BEND (PVC) (2" X 2") *	TEE (PVC) (2" X 2") *	TEE (16" X 12") *	PRESURE TAP (16" X 4") **	PRESURE TAP (12" X 4") **	PRESURE TAP (8" X 4") **	PIPE (PVC) ENCASEMENT (6") **
UNIT	LF	EA	EA	EA	EA	EA	EA	EA	EA	EA	EA	EA	EA	EA	EA	EA	EA	LF
SECTION 8																		
US 183 @ SH 45 SW	322	1	1		1	1		1	2		1					1		
US 183 @ SH 45 SE	470		2															
US 183 @ SH 45 NE	385	1	1			1	1	1		2			1	1			1	470
US 183 @ SH 45 NW	40	1	1		1	1		1								1		
SH 45 @ 216+00	168	1	2	1		1		1	1				1		1			86
TOTALS: CSJ 0683-06-017	1385	4	7	1	2	4	1	4	3	2	1		2	1	1	2	1	556

* CONTRACTORS INFORMATION ONLY
** PRESSURE TAP WILL BE PAID AT UNIT PRICE, COMPLETE IN PLACE INLUCING TAPPING SLEEVE & VALVE.

Texas Department of Transportation
© 2002 TEXAS TURNPIKE AUTHORITY DIVISION

HNTB ARCHITECTS ENGINEERS PLANNERS
The HNTB Companies

LOOP 1/SH 45 TOLL PLAZA
UTILITY SERVICES

UTILITY SERVICES SUMMARY

SECTION 8

DGN: RLM	FED. DIV. NO.	STATE	FEDERAL AID PROJECT NO.	HIGHWAY NO.
CHK DGN: JWS	6	TEXAS	TTA 2002(243)	LOOP1/SH45
DWG: RLM	STATE DISTRICT	COUNTY	CONTROL NO. / SECTION NO. / JOB NO.	SHEET NO.
CHK DWG: JWS	14	WILLIAMSON	0683 / 01 / 29	7

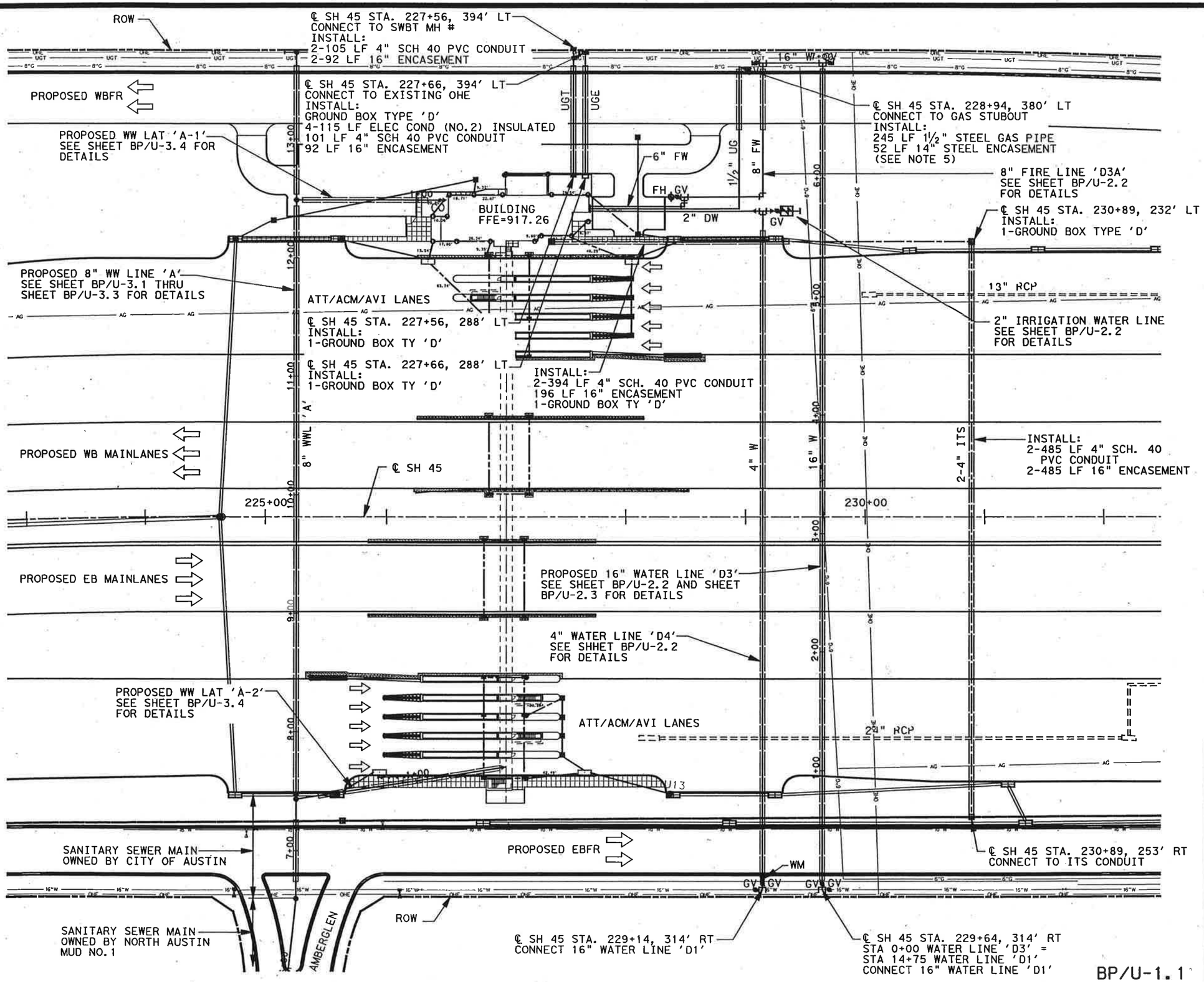

NOTES:

1. ELECTRIC METERS TO BE INSTALLED BY THE UTILITY COMPANY.
2. STEEL ENCASEMENT PIPE TO EXTEND 5' BEYOND BACK OF CURB.
3. SEE TOLL PLAZA MECHANICAL AND ELECTRICAL SHEETS FOR UTILITY FACILITIES AT TOLL PLAZA.
4. COMMUNICATIONS CONDUIT TO CONNECT TO CONDUIT STUB OUT AT SWBT MANHOLES.
5. GAS COMPANY PROVIDING 2" STUBOUT FOR CONNECTION TO GAS LINE. CONTRACTOR TO COORDINATE WITH GAS COMPANY FOR METER INSTALLATION.
6. ALL ENCASEMENTS THAT CROSS LOOP DETECTORS ARE TO BE A MINIMUM OF 5' BELOW TOP OF PAVEMENT

LEGEND

- GATE VALVE
- PIPE REDUCER
- FIRE HYDRANT
- WATER METER
- WW MANHOLE
- WW CLEANOUT
- GROUND BOX TYPE 'D'
- POLE W/ RISER
- SWBT MANHOLE
- COMMUNICATIONS DUCTBANK
- ITS CONDUIT
- STEEL ENCASEMENT PIPE
- ROW

STATE OF TEXAS
JOHN W. STRYBOS
64259
LICENSED
PROFESSIONAL ENGINEER

4-18-2003

Texas Department of Transportation
© 2003 TEXAS TURNPIKE AUTHORITY DIVISION

HNTB ARCHITECTS ENGINEERS PLANNERS
The HNTB Companies

SH 45 TOLL PLAZAS

UTILITY LAYOUT

BARRIER PLAZA ML3

SCALE: 1"=80'

DGN: DDD	FED. RD. DIV. NO.	STATE	FEDERAL AID PROJECT NO.			HIGHWAY NO.
CHK DGN: JWS	6	TEXAS	TTA 2002 (243)			LOOP1/SH45
DWG: DDD	STATE DISTRICT	COUNTY	CONTROL NO.	SECTION NO.	JOB NO.	SHEET NO.
CHK DWG: JWS	14	TRAVIS/ WILLIAMSON	0683	01	069	

BP/U-1.1

Scale: 80.000000:1.000000
Plotted on: 18-APR-2003 14:28

Pen Table: I:\Jobs\33246\techprod\rdwy\plots\33246h.pen
Design File: I:\Jobs\33246\TECHPROD\Rdwy\DWG\DS009\4wbp03u.dgn

Scale: 80.000000:1.000000
Plotted on: 04-APR-2003 16:14

BARRIER PLAZA ML3 WATER & WASTEWATER PHASING NARRATIVE

16" WATER LINE 'D3'

I. CONNECT TO WATER LINE 'D1' AT STA 14+75. INSTALL GATE VALVES AS SHOWN.

II. CONSTRUCT 16" WATER LINE 'D1' TO STA. 6+97 WITH 28" ENCASEMENT AT LINE AND GRADE INDICATED ON THE PLANS BY OPEN CUT.

III. INSTALL 16" TEE AND GATE VALVE AS SHOWN. PLUG EAST END OF TEE RUN.

IV. CONSTRUCT 16" WATER LINE 'D1' TO STA 7+47 AT LINE AND GRADE INDICATED ON THE PLANS BY OPEN CUT.

V. INSTALL 16" TEE AND GATE VALVE AS SHOWN. PLUG WEST END OF TEE RUN. END 16" WATER LINE 'D1'

8" FIRE WATER LINE 'D3A'

I. CONNECT TO WATER LINE 'D3' AT STA 7+47.

II. CONSTRUCT 175.5 LF 8" WATER LINE 'D3A' WITH 52 LF 20" ENCASEMENT UNDER PROPOSED WBFR BY OPEN CUT.

III. INSTALL 6" TEE, 90° BEND, AND 85 LF OF FIRE LEAD TO BUILDING AS SHOWN BY OPEN CUT. CONNECT TO BUILDING FIRE SYSTEM. SEE MEP PLANS FOR CONTINUATION.

IV. INSTALL 10 LF FIRE LEAD, 6" GATE VALVE AND FIRE HYDRANT ASSEMBLY FROM WEST END OF 6" TEE AS SHOWN BY OPEN CUT. END WATER LINE 'D3A'.

4" DOMESTIC WATER INE 'D4' (OWNED BY TTA)

I. CONNECT TO WATER LINE 'D1' AT STA 14+25. INSTALL GATE VALVES AND 4" WATER METER AS SHOWN

II. CONSTRUCT 570 LF 4" SCH. 40 PVC WATER LINE WITH 548 LF 16" ENCASEMENT BY OPEN CUT.

III. INSTALL 4" TEE AND 2-4" X 2" REDUCERS. CONSTRUCT 145 LF 2" DW WEST FROM TEE TO BUILDING AS SHOWN BY OPEN CUT. CONNECT TO BUILDING DOMESTIC WATER. SEE MEP PLANS FOR CONTINUATION.

IV. INSTALL 37 LF 2" IRRIGATION LINE, GATE VALVE AND BACKFLOW PREVENTOR AS SHOWN BY OPEN CUT. END WATER LINE 'D4'.

8" WASTEWATER LINE 'A' WITH LATERALS 'A-1' & 'A-2'

I. CONNECT TO EXISTING NORTH AUSTIN M.U.D. MANHOLE IN AMBERGLEN, ℄ SH 45 STA 225+46, 952' RT. INSTALL DROP CONNECTION.

II. CONSTRUCT 246 LF 8" WWL AT LINE AND GRADE INDICATED ON PLANS, AND MANHOLE A-1 ℄ SH 45 STA 225+31, 735' RT BY OPEN CUT.

III. CONSTRUCT 306 LF 8" WWL AT LINE AND GRADE INDICATED ON PLANS, AND MANHOLE A-2 ℄ SH 45 STA 225+15, 429' RT BY OPEN CUT.

IV. CONSTRUCT 108 LF 8" WWL AT LINE AND GRADE INDICATED ON PLANS, AND MANHOLE A-3 ℄ SH 45 STA 225+26, 423' RT BY OPEN CUT.

V. CONSTRUCT 84 LF 8" WWL w/52 LF 20" ENCASEMENT AT LINE AND GRADE SHOWN ON PLANS AND MANHOLE A-4, ℄ SH 45 STA 225+26, 238' RT BY OPEN CUT.

Va1. CONSTRUCT 171 LF 8" WW LAT 'A-2' w/ 152 LF 20" ENCASEMENT AT LINE AND GRADE SHOWN ON PLANS BY OPEN CUT.

Va2. INSTALL 8" x 4" REDUCER. CONNECT TO TUNNEL SANITARY SEWER. SEE MEP PLANS FOR CONTINUATION. END WW LAT 'A-2'.

VI. CONSTRUCT 506 LF 8" WWL w/ 497 LF 20" ENCASEMENT AT LINE AND GRADE SHOWN ON PLANS AND MANHOLE A-5, ℄ SH 45 STA 225+26, 267' LT BY OPEN CUT. PLUG NORTH END OF MANHOLE.

VIa. CONSTRUCT 120 LF 8" WW LAT 'A-1' w/ 103 LF 20" ENCASEMENT AT LINE AND GRADE SHOWN ON PLANS BY OPEN CUT.

VIb. INSTALL 8" x 4" REDUCER. CONNECT TO BUILDING SANITARY SEWER. SEE MEP PLANS FOR CONTINUATION. END WW LAT 'A-1'.

VII. CONSTRUCT 124 LF 8" WWL w/ 103 LF 20" ENCASEMENT AT LINE AND GRADE SHOWN ON PLANS AND MANHOLE A-6, ℄ SH 45 STA 225+26, 391' LT BY OPEN CUT. PLUG SOUTH END OF MANHOLE. INSTALL 10 LF 12" WWL STUB-OUTS EAST AND WEST SIDES OF MANHOLE AND PLUG. END WASTEWATER LINE 'A'.

John W. Strydos
STATE OF TEXAS
JOHN W. STRYDOS
64259
LICENSED
PROFESSIONAL ENGINEER
4-4-2003

BP/U-1.2

Texas Department of Transportation
© 2003 TEXAS TURNPIKE AUTHORITY DIVISION

HNTB ARCHITECTS ENGINEERS PLANNERS
The HNTB Companies

SH 45 TOLL PLAZAS

WATER & WASTEWATER PHASING NARRATIVE

BARRIER PLAZA ML3

SCALE:

DGN: DDD	FED. RD. DIV. NO.	STATE	FEDERAL AID PROJECT NO.		HIGHWAY NO.
CHK DGN: JWS	6	TEXAS	TTA 2002 (243)		LOOP1/SH45
DWG: DDD	STATE DISTRICT	COUNTY	CONTROL NO.	SECTION NO.	JOB NO. / SHEET NO.
CHK DWG: JWS	14	TRAVIS/ WILLIAMSON	0683	01	069 / 73

Pen Tablet: s\33246\techprod\rdwy\plots\33246fh.pen
Design File: I:\Jobs\33246\TECHPROD\Rdwy\DWG\DS009\4wbp03un.dgn

Scale: 60.000000:1.000000
Plotted on: 07-APR-2003 08:46
Pen Table: I:\Jobs\33246\TECHPROD\Utilities\Irrigation\PLOTS\33246HUTIL.pen
Design File: I:\Jobs\33246\TECHPROD\Utilities\Irrigation\SECTION8\45irr08#nw.dgn

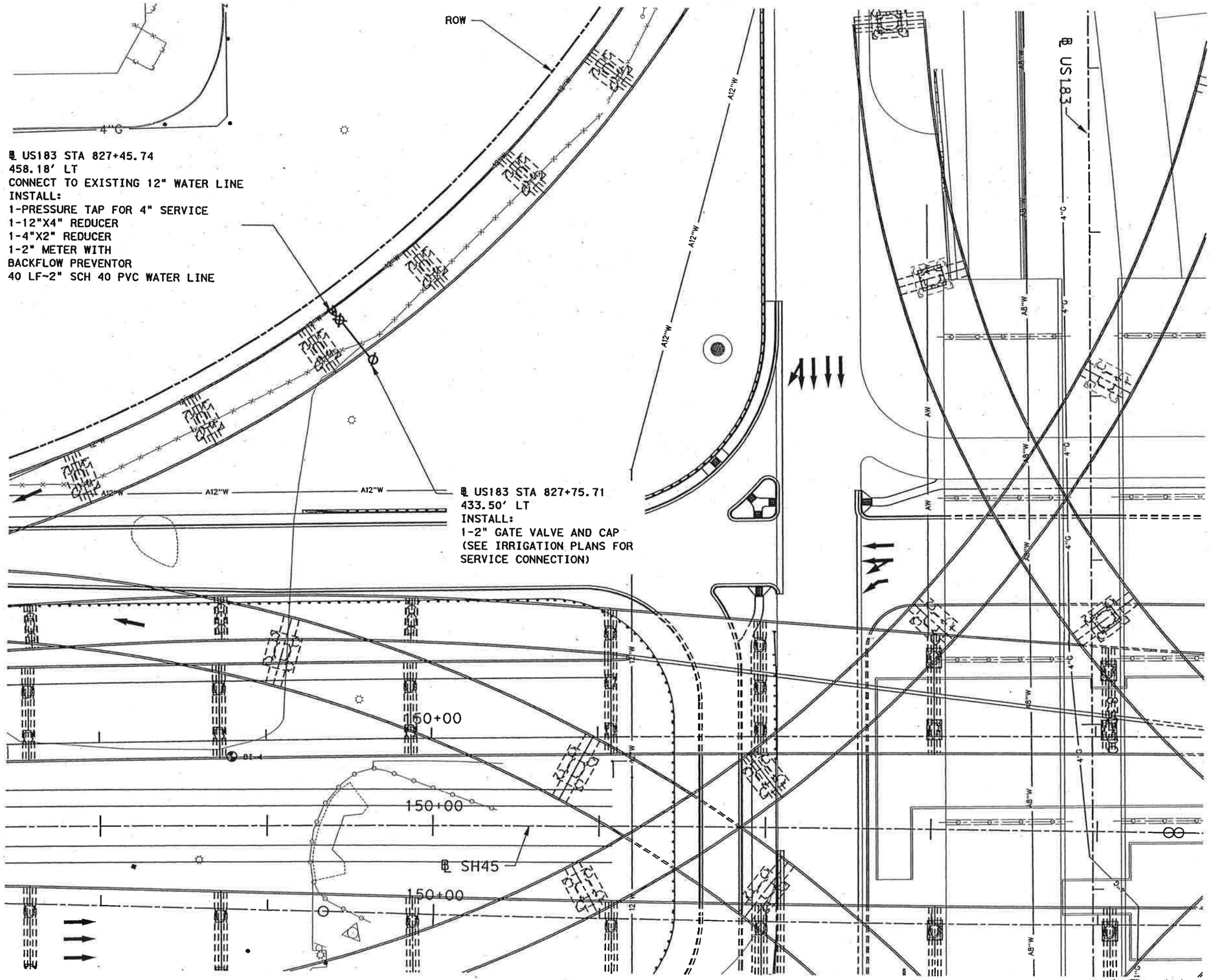
ROW
4"G
℄ US183 STA 827+45.74
458.18' LT
CONNECT TO EXISTING 12" WATER LINE
INSTALL:
1-PRESSURE TAP FOR 4" SERVICE
1-12"X4" REDUCER
1-4"X2" REDUCER
1-2" METER WITH
BACKFLOW PREVENTOR
40 LF-2" SCH 40 PVC WATER LINE
A12"W
A12"W
A12"W
℄ US183 STA 827+75.71
433.50' LT
INSTALL:
1-2" GATE VALVE AND CAP
(SEE IRRIGATION PLANS FOR
SERVICE CONNECTION)
℄ US183
150+00
150+00
150+00
℄ SH45
A8"W
A8"W
A8"W

Scale= 60.000000:1.000000
Plotted on: 07-APR-2003 08:39

Pen Table:\\33246\TECHPROD\Utilities\Irrigation\PLOTS\33246NUTIL.pen
Design File:\\Jobs\33246\TECHPROD\Utilities\Irrigation\SECTION01\45irr01&ne.dgn

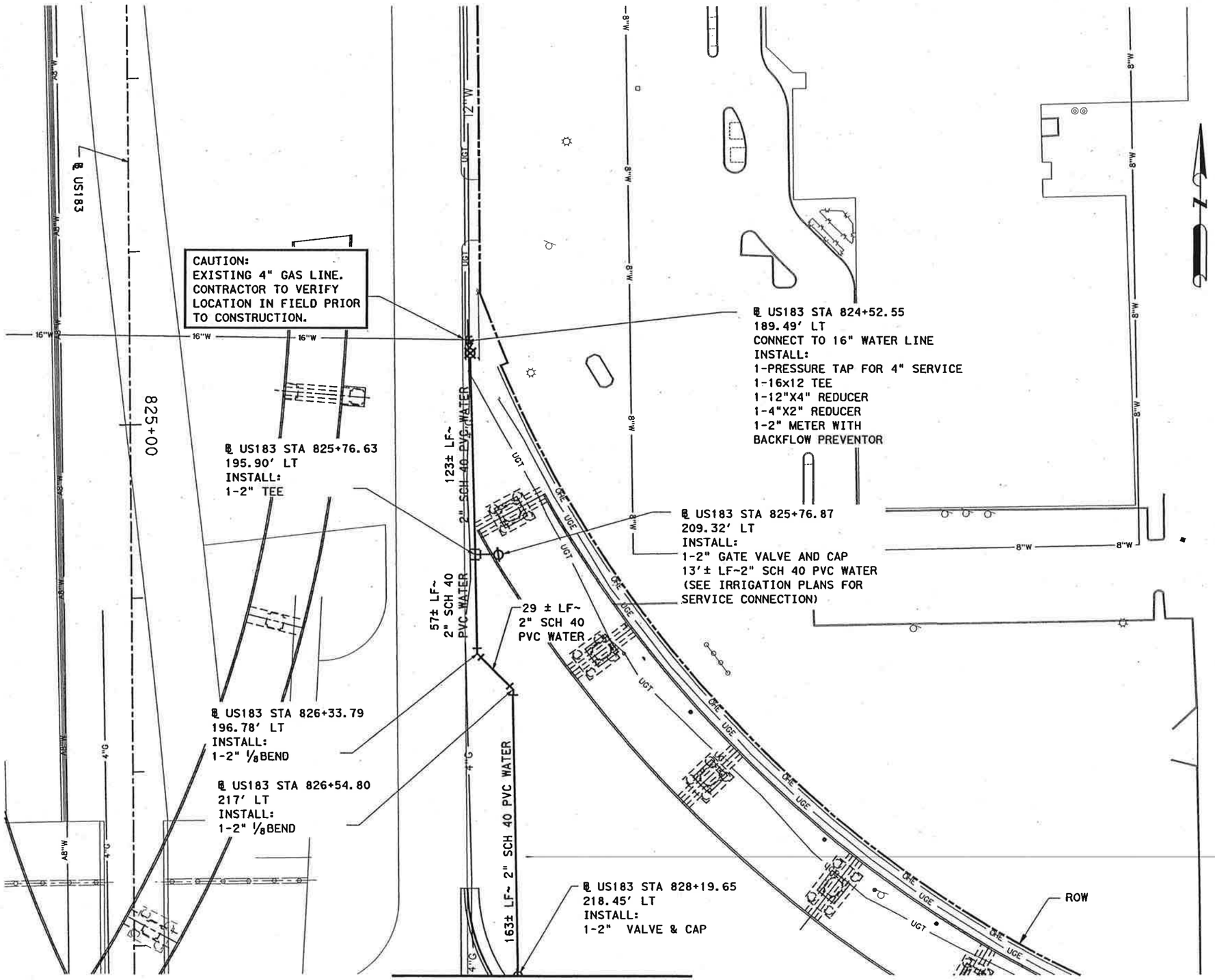

MATCHLINE "A"
SEE SHEET 2 OF 2

NOTES:

1. 2" SCH 40 PVC WATER LINES TO BE RUN THROUGH 6" PVC CONDUIT.
2. ALL ENCASEMENTS THAT CROSS LOOP DETECTORS ARE TO BE A MINIMUM OF 5-FEET BELOW TOP OF PAVEMENT.
3. CONTRACTOR TO FIELD VERIFY EXISTING DEPTHS AT ALL UTILITY CROSSINGS AND MUST MAINTAIN MINIMAL CLEARANCE AS DIRECTED BY THE ENGINEER.

LEGEND

- GATE VALVE
- PIPE REDUCER
- FIRE HYDRANT
- WATER METER
- WW MANHOLE
- WW CLEANOUT
- GROUND BOX TYPE A
- POLE W/ RISER
- SWBT MANHOLE
- COMMUNICATIONS DUCTBANK
- ITS CONDUIT
- ENCASEMENT PIPE
- ROW



Texas Department of Transportation
© 2002 TEXAS TURNPIKE AUTHORITY DIVISION

HNTB ARCHITECTS ENGINEERS PLANNERS
The HNTB Companies

LOOP 1/SH 45 TOLL PLAZA
UTILITY SERVICES

WATER LINE
(IRRIGATION TIE IN)
US183/SH45 - NE

SCALE: 1"=60'

SHEET 1 of 2

DGN: RLM	FED. DIV. NO.	STATE	FEDERAL AID PROJECT NO.	HIGHWAY NO.
CHK DGN: JWS	6	TEXAS	ITA 2002(243)	LOOP1/SH45
DWG: RLM	STATE DISTRICT	COUNTY	CONTROL NO. / SECTION NO. / JOB NO. / SHEET NO.	
CHK DWG: JWS	14	WILLIAMSON	0683 / 01 / 069 / 116	

L5-02

MATCHLINE "A"
SEE SHEET 1 OF 2

℄ US183 STA 828+19.65
218.45' LT
INSTALL:
SEE SHEET 1 OF 2

470± LF~
2" SCH 40 PVC WATER

470'±~6" PVC ENCASEMENT

℄ SH45

℄ US183 STA 832+92.94
223.69' LT
INSTALL:
1-2" VALVE & CAP
(SEE IRRIGATION PLANS FOR
SERVICE CONNECTION)

ROW

NOTES:

1. 2" SCH 40 PVC WATER LINES TO BE RUN THROUGH 6" PVC CONDUIT.
2. ALL ENCASEMENTS THAT CROSS LOOP DETECTORS ARE TO BE A MINIMUM OF 5-FEET BELOW TOP OF PAVEMENT.
3. CONTRACTOR TO FIELD VERIFY EXISTING DEPTHS AT ALL UTILITY CROSSINGS AND MUST MAINTAIN MINIMAL CLEARANCE AS DIRECTED BY THE ENGINEER.

LEGEND

- GATE VALVE
- PIPE REDUCER
- FIRE HYDRANT
- WATER METER
- WW MANHOLE
- WW CLEANOUT
- GROUND BOX TYPE A
- POLE W/ RISER
- SWBT MANHOLE
- COMMUNICATIONS DUCTBANK
- ITS CONDUIT
- ENCASEMENT PIPE
- ROW

STATE OF TEXAS
JOHN W. STRYBOS
64259
LICENSED
PROFESSIONAL ENGINEER

4-7-2003

Texas Department of Transportation
© 2002 TEXAS TURNPIKE AUTHORITY DIVISION

HNTB ARCHITECTS ENGINEERS PLANNERS
The HNTB Companies

LOOP 1/SH 45 TOLL PLAZA
UTILITY SERVICES

WATER LINE
(IRRIGATION TIE IN)
US183/SH45 - SE

SCALE: 1"=60' SHEET 2 of 2

DGN: RLM	FED. DIV. NO.	STATE	FEDERAL AID PROJECT NO.			HIGHWAY NO.
CHK DGN: JWS	6	TEXAS	TTA 2002(243)			LOOP1/SH45
DWG: RLM	STATE DISTRICT	COUNTY	CONTROL NO.	SECTION NO.	JOB NO.	SHEET NO.
CHK DWG: JWS	14	WILLIAMSON	0683	01	069	117

L5-03

℄ US183 STA 835+71.31
236.50' RT
INSTALL:
1-2" GATE VALVE AND CAP
(SEE IRRIGATION PLANS FOR
SERVICE CONNECTION)

℄ US183 STA 835+85.86
263.30' RT
INSTALL:
1-2" 1/4 BEND

℄ US183 STA 836+92.83
211.95' RT
INSTALL:
1-2" 1/16 BEND

SEE DETAIL 'A'

℄ US183 STA 838+74.55
213.07' RT
CONNECT TO EXISTING 12" WATER LINE
INSTALL:
1-2" 1/4 BEND
1-2" METER WITH
BACKFLOW PREVENTOR
300 LF~2" SCH 40 PVC WATER LINE

℄ US183 STA 838+74.57
190.19' RT
INSTALL:
1- 2" 1/4 BEND

℄ US183 STA 838+83.91
189.85' RT
CONNECT TO EXISTING 12" WATER LINE
INSTALL:
1-PRESSURE TAP FOR 4" SERVICE
1-12"X4" REDUCER
1-4"X2" REDUCER
1- 2" 1/4 BEND
22 LF~2" SCH 40 PVC WATER LINE



DETAIL 'A'
N.T.S.

ROW

℄ US183

835+00

NOTES:

1. 2" SCH 40 PVC WATER LINES TO BE RUN THROUGH 6" PVC CONDUIT.
2. ALL ENCASEMENTS THAT CROSS LOOP DETECTORS ARE TO BE A MINIMUM OF 5-FEET BELOW TOP OF PAVEMENT.
3. CONTRACTOR TO FIELD VERIFY EXISTING DEPTHS AT ALL UTILITY CROSSINGS AND MUST MAINTAIN MINIMAL CLEARANCE AS DIRECTED BY THE ENGINEER.

LEGEND
- GATE VALVE
- PIPE REDUCER
- FIRE HYDRANT
- WATER METER
- WW MANHOLE
- WW CLEANOUT
- GROUND BOX TYPE A
- POLE W/ RISER
- SWBT MANHOLE
- COMMUNICATIONS DUCTBANK
- ITS CONDUIT
- ENCASEMENT PIPE
- ROW

STATE OF TEXAS
JOHN W. STRYBOS
64259
LICENSED
PROFESSIONAL ENGINEER
4-7-2003

Texas Department of Transportation
© 2002 TEXAS TURNPIKE AUTHORITY DIVISION

HNTB ARCHITECTS ENGINEERS PLANNERS
The HNTB Companies

LOOP 1/SH 45 TOLL PLAZA
UTILITY SERVICES

WATER LINE
(IRRIGATION TIE IN)

US183/SH45 - SW

SCALE: 1"=60'

DGN: RLM	FED. RD. DIV. NO.	STATE	FEDERAL AID PROJECT NO.	HIGHWAY NO.
CHK DGN: JWS	6	TEXAS	FTA2002(243)	LOOP1/SH45
DWG: RLM	STATE DISTRICT	COUNTY	CONTROL NO. / SECTION NO. / JOB NO.	SHEET NO.
CHK DWG: JWS	14	WILLIAMSON	0683 / 01 / 069	118

L5-04

Scale: 60.000000:1.000000
Plotted on: 07-APR-2003 08:39

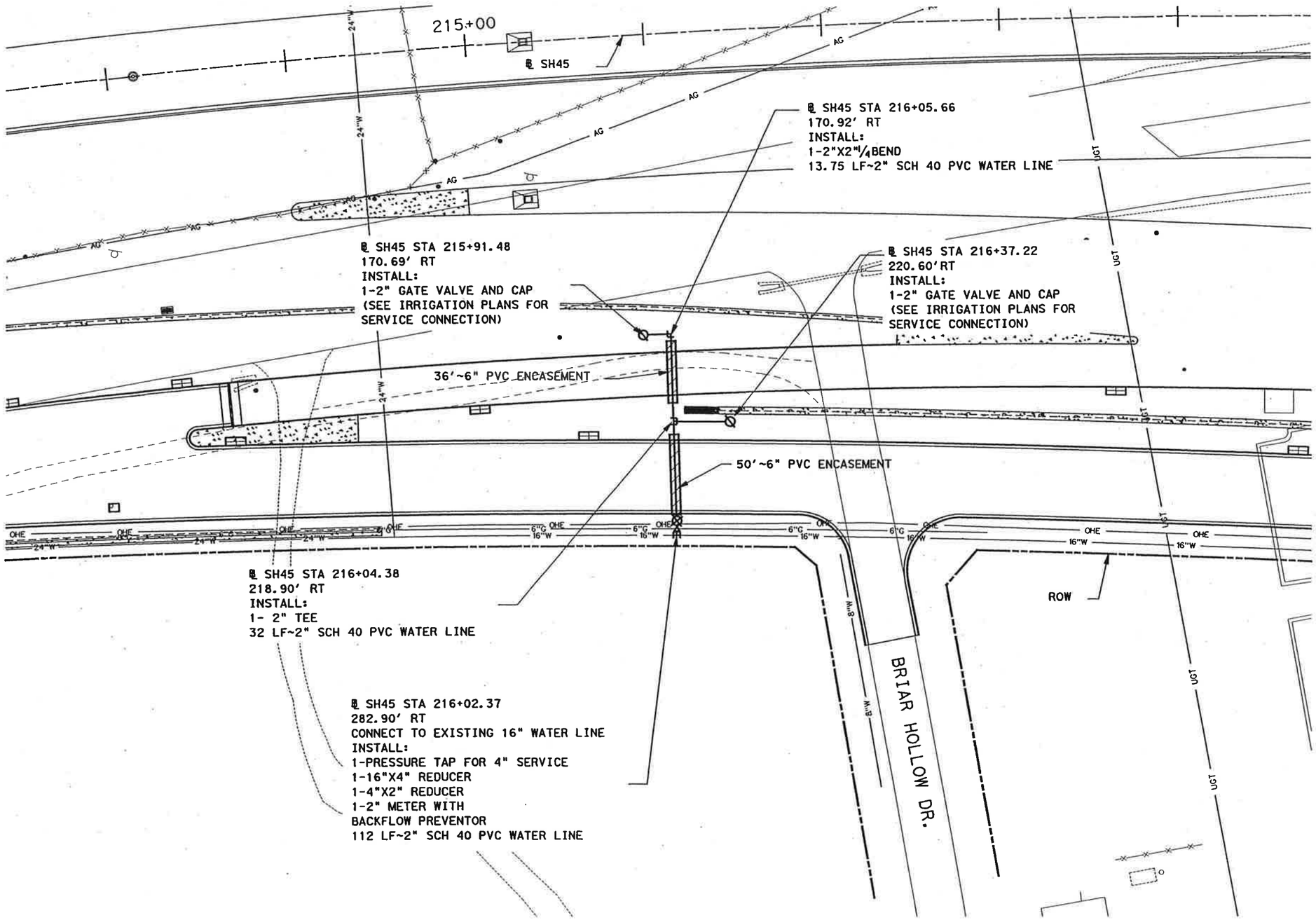

NOTES:

1. 2" SCH 40 PVC WATER LINES TO BE RUN THROUGH 6" PVC CONDUIT.
2. ALL ENCASEMENTS THAT CROSS LOOP DETECTORS ARE TO BE A MINIMUM OF 5-FEET BELOW TOP OF PAVEMENT.
3. CONTRACTOR TO FIELD VERIFY EXISTING DEPTHS AT ALL UTILITY CROSSINGS AND MUST MAINTAIN MINIMAL CLEARANCE AS DIRECTED BY THE ENGINEER.

LEGEND

- GATE VALVE
- PIPE REDUCER
- FIRE HYDRANT
- WATER METER
- WW MANHOLE
- WW CLEANOUT
- GROUND BOX TYPE A
- POLE W/ RISER
- SWBT MANHOLE
- COMMUNICATIONS DUCTBANK
- ITS CONDUIT
- ENCASEMENT PIPE
- ROW

JOHN W. STRYBOS 64259 LICENSED PROFESSIONAL ENGINEER
STATE OF TEXAS
4-7-2003

Texas Department of Transportation
© 2002 TEXAS TURNPIKE AUTHORITY DIVISION

HNTB ARCHITECTS ENGINEERS PLANNERS
The HNTB Companies

LOOP 1/SH 45 TOLL PLAZA
UTILITY SERVICES

WATER LINE
(IRRIGATION TIE IN)
SH45 - STA 216+00

SCALE: 1"=60'

DGN: RLM	FED. DIV. NO.	STATE	FEDERAL AID PROJECT NO.		HIGHWAY NO.
CHK DGN: JWS	6	TEXAS	TTA 2002(PAS)		LOOP1/SH45
DWN: RLM	STATE DISTRICT	COUNTY	CONTROL NO.	SECTION NO.	JOB NO.	SHEET NO.
CHK DWG: JWS	14	WILLIAMSON	0683	01	069	119

L5-05

Pen Table: I:\33246\TECHPROD\Utilities\Irrigation\PLOTS\33246UTIL.pen
Design File: I:\Jobs\33246\TECHPROD\Utilities\Irrigation\SECTIONS\45irr08web.dgn

Scale: 80.000000:1.000000
Plotted on: 04-APR-2003 08:55

Pen Table: \33246\techprod\rdwy\plote\33246h.pen
Design Filename: I:\Jobs\33246\TECHPROD\Rdwy\DWG\DS009\4wbp03w01.dgn

ROW

PROPOSED WBFR

℄ SH 45 STA. 229+14, 383' LT
STA 7+47 WATER LINE 'D3'
INSTALL:
1-16" X 8" TEE
1-16" X 16" GATE VALVE
1-16" PLUG

10 LF 6" DI
FIRE LEAD

UGT

UGE

1½" UG

8" DI FW

FH

GV

BUILDING
FFE=917.26

2" DW

85 LF 6" DI
FIRE LEAD

ATT/ACM/AVI LANES

PROPOSED WB MAINLANES

8" WWL 'A'

℄ SH 45

225+00

230+00

4" W

16" W

2-4" ITS

℄ SH 45 STA. 229+64, 383' LT
STA 6+97 WATER LINE 'D3'
INSTALL:
1-16" X 16" TEE
2-16" X 16" GATE VALVE
1-16" plug
48 LF 16" DI WATER LINE

FIRE LINE 'D3A'
INSTALL:
175.5 LF 8" DI FIRE LINE
95 LF 6" FIRE LEAD
52 LF 20" ENCASEMENT
1-8" 90 ° BEND
1-8" X 6" TEE
1-6" GATE VALVE
1-FH
1-6" 90° BEND

CONNECT TO IRRIGATION
SEE IRRIGATION DWGS
FOR CONTINUATION

℄ SH 45 STA. 229+14, 258' LT
WATER LINE 'D4'
INSTALL:
1-4" X 4" TEE
2-4" X 2" REDUCER
1-2" GATE VALVE
1-BACKFLOW PREVENTOR
1-2" WATER METER W/BOX
177 LF 2" SCH. 40 PVC WATER LINE

PROPOSED EB MAINLANES

WATER LINE 'D4'
INSTALL:
570 LF 4" SCH. 40 PVC WATER LINE
548 LF 16" ENCASEMENT

WATER LINE 'D3'
INSTALL:
695 LF 16" DI WATER LINE
684 LF 28" ENCASEMENT
SEE SHEET BP/U-2.3 FOR PROFFILE

ATT/ACM/AVI LANES

24" RCP

U13

PROPOSED EBFR

WM

GV

PROPOSED
WATER LINE 'D1'

ROW

AMBERGLEN

℄ SH 45 STA. 229+14, 314' RT
CONNECT 16" WATER LINE 'D1'
STA 14+25
WATER LINE 'D4'
INSTALL:
1-16" X 4" TEE
1-16" GATE VALVE
1-4" GATE VALVE
1-4" WATER METER W/BOX

℄ SH 45 STA. 229+64, 314' RT
STA 0+00 WATER LINE 'D3' =
STA 14+75 WATER LINE 'D1'
CONNECT 16" WATER LINE 'D1'
INSTALL:
1-16" X 16" TEE
2-16" X 16" GATE VALVE

BP/U-2.2

LEGEND
- GATE VALVE
- PIPE REDUCER
- FIRE HYDRANT
- WATER METER
- WW MANHOLE
- WW CLEANOUT
- GROUND BOX TYPE 'D'
- POLE W/ RISER
- SWBT MANHOLE
- COMMUNICATIONS DUCTBANK
- ITS CONDUIT
- STEEL ENCASEMENT PIPE
- ROW

John W. Strybos

STATE OF TEXAS
JOHN W. STRYBOS
64259
LICENSED
PROFESSIONAL ENGINEER

4-4-2003

Texas Department of Transportation
© 2003 TEXAS TURNPIKE AUTHORITY DIVISION

HNTB ARCHITECTS ENGINEERS PLANNERS
The HNTB Companies

SH 45 TOLL PLAZAS

WATER LINE LAYOUT

BARRIER PLAZA ML3

SCALE: 1"=80'

DGN: DDD	FED. RD. DIV. NO.	STATE	FEDERAL AID PROJECT NO.		HIGHWAY NO.
CHK. DGN: JWS	6	TEXAS	TTA 2002 (243)		LOOP1/SH45
DWG: DDD	STATE DISTRICT	COUNTY	CONTROL NO.	SECTION NO.	JOB NO.	SHEET NO.
CHK. DWG: JWS	14	TRAVIS/ WILLIAMSON	0683	01	069	

Scale: 80.000002:1.000000
Plotted on: 04-APR-2003 10:43

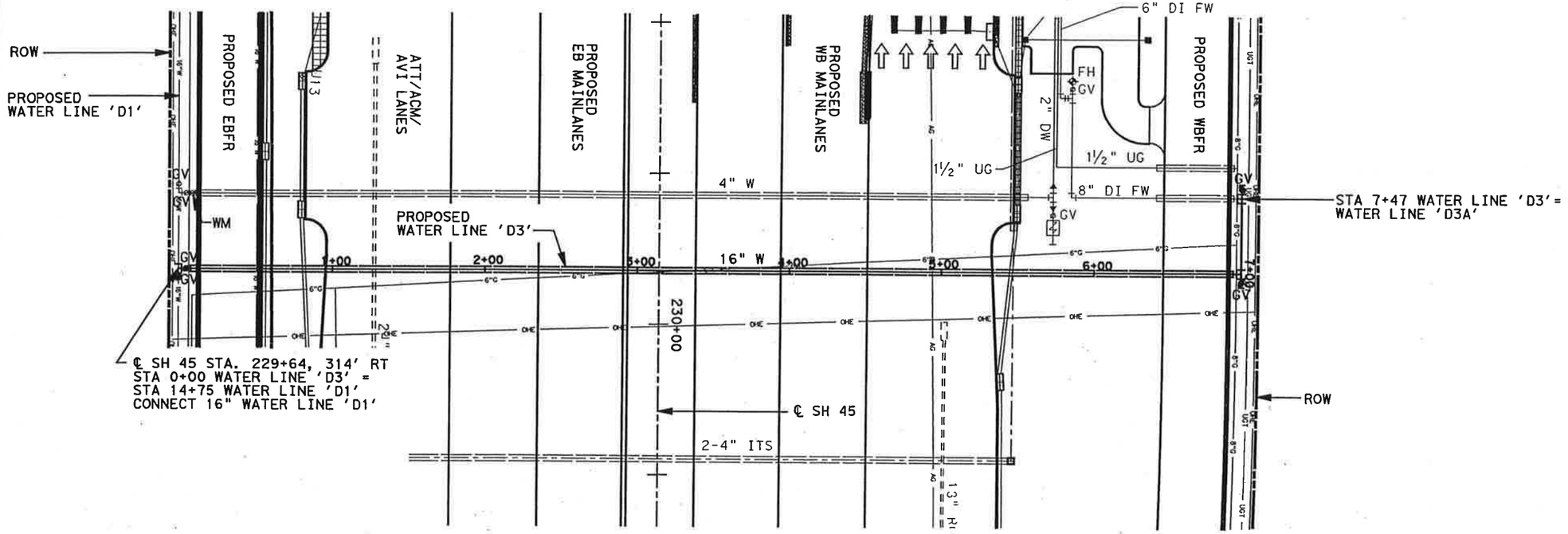

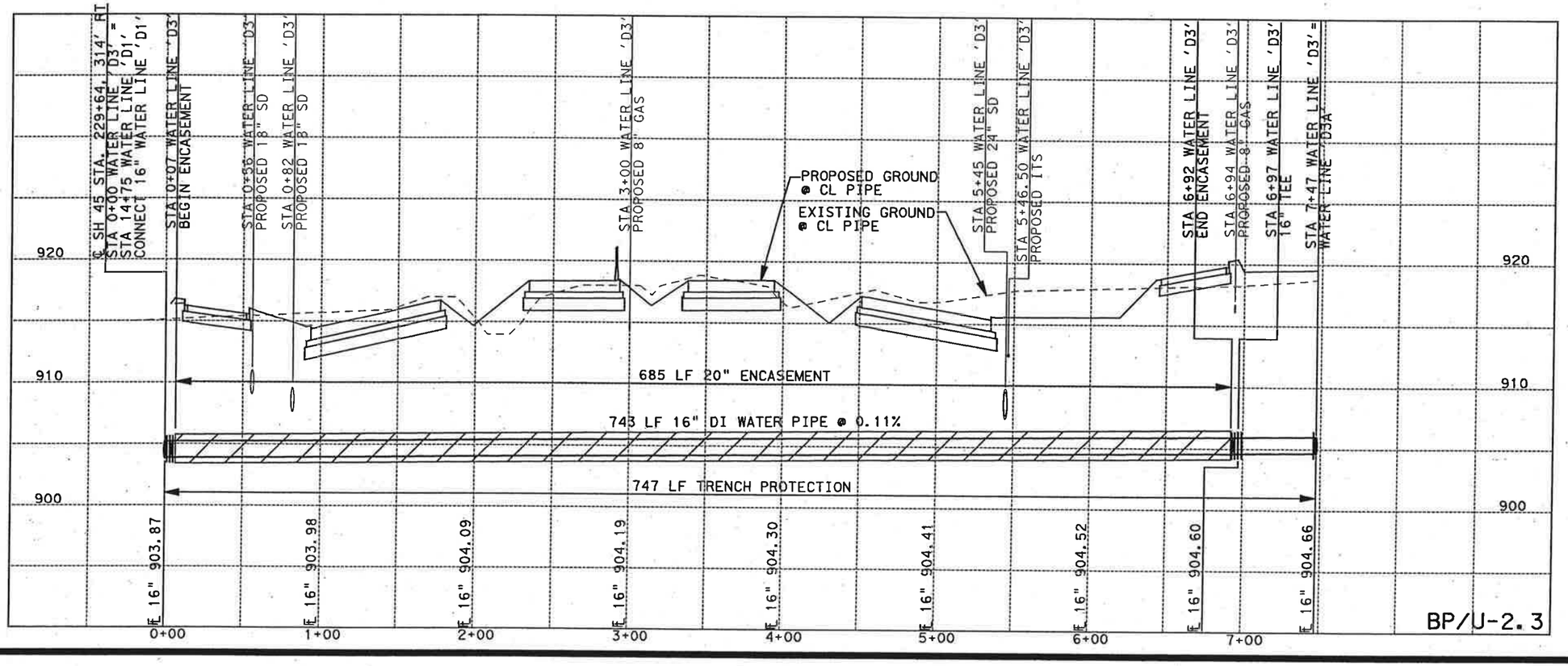

LEGEND

- GATE VALVE
- PIPE REDUCER
- FIRE HYDRANT
- WATER METER
- WW MANHOLE
- WW CLEANOUT
- GROUND BOX TYPE 'D'
- POLE W/ RISER
- SWBT MANHOLE
- COMMUNICATIONS DUCTBANK
- ITS CONDUIT
- STEEL ENCASEMENT PIPE
- ROW

STATE OF TEXAS
JOHN W. STRYBOS
64259
LICENSED
PROFESSIONAL ENGINEER
4-4-2003

Texas Department of Transportation
© 2003 TEXAS TURNPIKE AUTHORITY DIVISION

HNTB ARCHITECTS ENGINEERS PLANNERS
The HNTB Companies

SH 45 TOLL PLAZAS

WATER LINE 'D3' PROFILE

BARRIER PLAZA ML3

SCALE: H 1"=80'
V 1"=10'

DGN: DDD	FED. RD. DIV. NO.	STATE	FEDERAL AID PROJECT NO.	HIGHWAY NO.
CHK. DGN: JWS	6	TEXAS	TTA 2002 (243)	LOOP1/SH45
DWG: DDD	STATE DISTRICT	COUNTY	CONTROL NO. / SECTION NO. / JOB NO.	SHEET NO.
CHK. DWG: JWS	14	TRAVIS/ WILLIAMSON	0683 / 01 / 069	

Pen Tables: I:\33246\tech\prod\rdwy\plots\33246h.pen
Design Filena... I:\Jobs\33246\TECHPROD\Rdwy\DWG\DS009\4wbp03w02.dgn

Scale: 50.001036:1.000000
Plotted on: 18-APR-2003 11:12

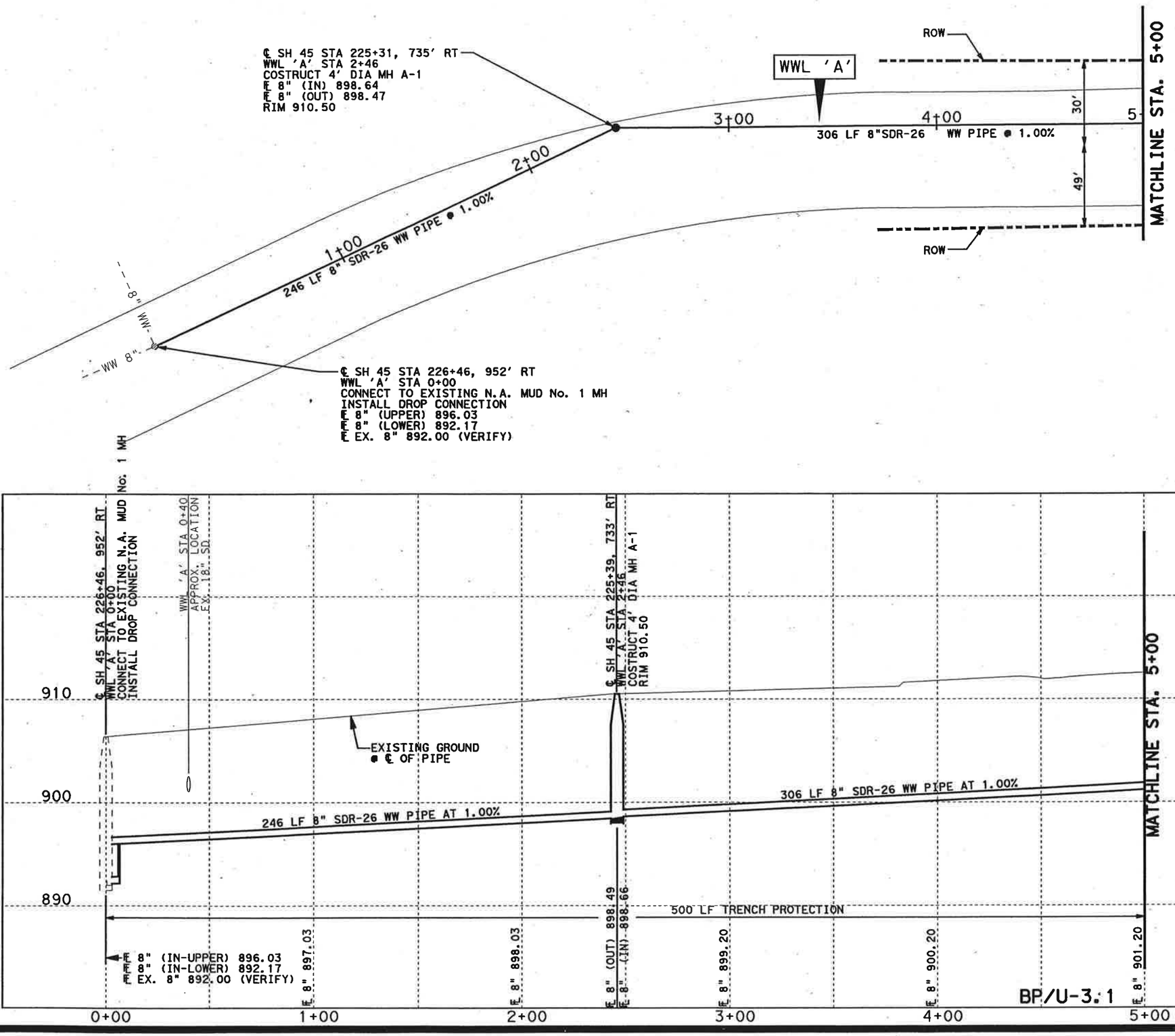

LEGEND

- GATE VALVE
- PIPE REDUCER
- FIRE HYDRANT
- WATER METER
- WW MANHOLE
- WW CLEANOUT
- GROUND BOX TYPE 'D'
- POLE W/ RISER
- SWBT MANHOLE
- COMMUNICATIONS DUCTBANK
- ITS CONDUIT
- STEEL ENCASEMENT PIPE
- ROW

STATE OF TEXAS
JOHN W. STRYBOS
64259
LICENSED
PROFESSIONAL ENGINEER
4-18-2003

Texas Department of Transportation
© 2003 TEXAS TURNPIKE AUTHORITY DIVISION

HNTB ARCHITECTS ENGINEERS PLANNERS
The HNTB Companies

SH 45 TOLL PLAZAS

WASTEWATER LINE 'A' PLAN AND PROFILE

STA 0+00 - STA 5+00

BARRIER PLAZA ML3

SCALE: H 1"=50'
V 1"=10'

SHEET 1 OF 3

DGN: DDD	FED. DIV. NO.	STATE NO.	STATE	FEDERAL AID PROJECT NO.	HIGHWAY NO.
CHK DGN: JWS	6		TEXAS	TTA 2002 (243)	LOOP1/SH45
DWN: DDD	STATE DISTRICT	COUNTY		CONTROL NO.	SECTION NO.	JOB NO.	SHEET NO.
CHK DWN: JWS	14	TRAVIS/ WILLIAMSON		0683	01	069	

Pen Tables: I:\33246\techprod\rdwy\plots\33246rpf.pen
Design Files: I:\jobs\33246\TECHPROD\Rdwy\DWG\05009\Mbp03s01.dgn

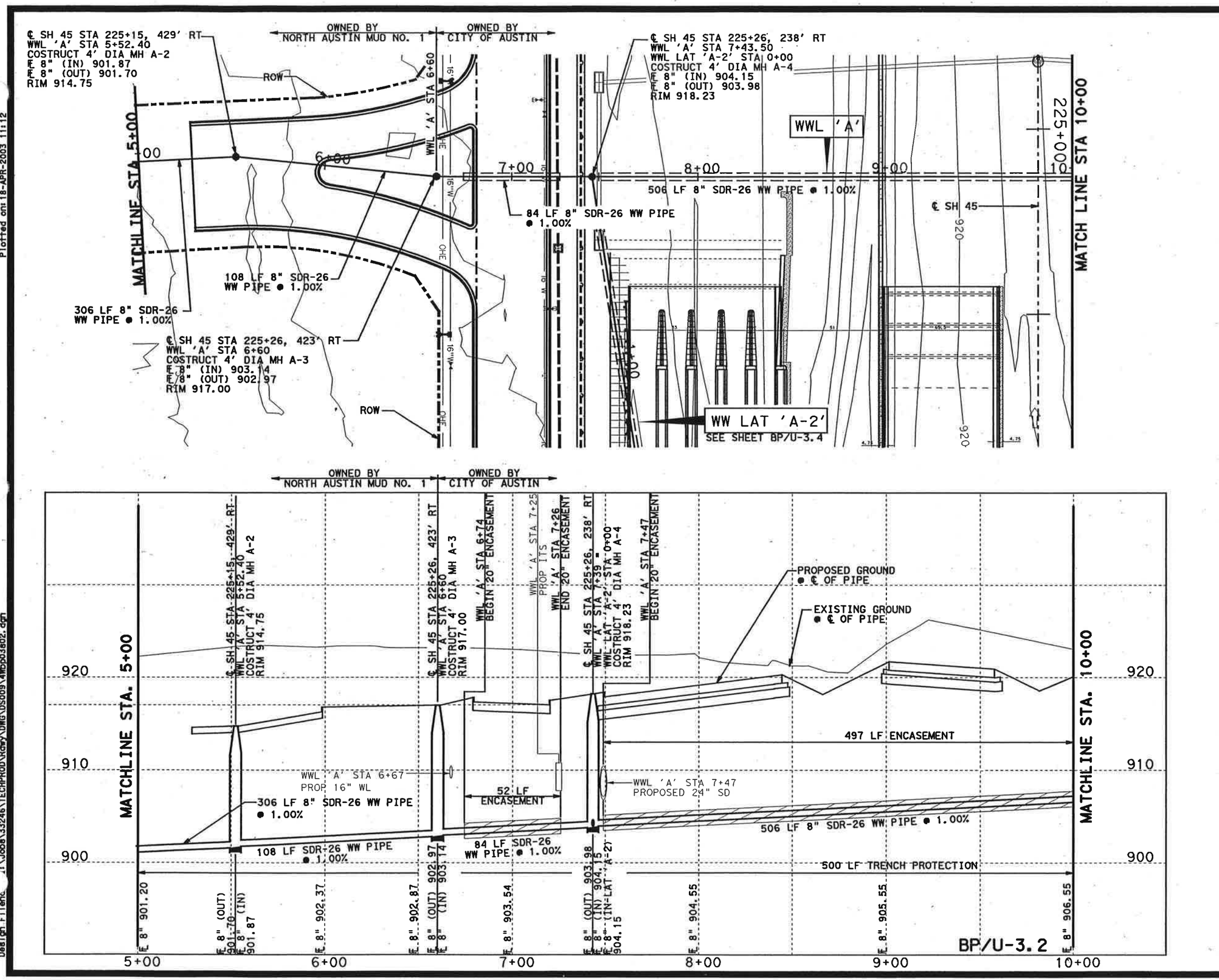

LEGEND

- GATE VALVE
- PIPE REDUCER
- FIRE HYDRANT
- WATER METER
- WW MANHOLE
- WW CLEANOUT
- GROUND BOX TYPE 'D'
- POLE W/ RISER
- SWBT MANHOLE
- COMMUNICATIONS DUCTBANK
- ITS CONDUIT
- STEEL ENCASEMENT PIPE
- ROW

STATE OF TEXAS
JOHN W. STRYBOS
64259
LICENSED PROFESSIONAL ENGINEER
4-18-2003

Texas Department of Transportation
© 2003 TEXAS TURNPIKE AUTHORITY DIVISION

HNTB ARCHITECTS ENGINEERS PLANNERS
The HNTB Companies

SH 45 TOLL PLAZAS

WASTEWATER LINE 'A' PLAN AND PROFILE

STA 5+00 - STA 10+00

BARRIER PLAZA ML3

SCALE: H 1"=50' V 1"=10'

SHEET 2 OF 3

DGN: DDD	FED. RD. DIV. NO.	STATE	FEDERAL AID PROJECT NO.	HIGHWAY NO.
CHK DGN: JWS	6	TEXAS	TTA 2002 (243)	LOOP1/SH45

DWG: DDD	STATE DISTRICT	COUNTY	CONTROL NO.	SECTION NO.	JOB NO.	SHEET NO.
CHK DWG: JWS	14	TRAVIS/ WILLIAMSON	0683	01	069	

Scale: 50.000003:1.000000
Plotted on: 18-APR-2003 11:12

Pen Table: I:\...\33246\techprod\rdwy\plots\33246rpf.pen
Design Filename: J:\Jobs\33246\TECHPROD\Rdwy\DWG\DS009\4Wbp03s02.dgn

Scale: 50.000003:1.000000
Plotted on: 18-APR-2003 11:12

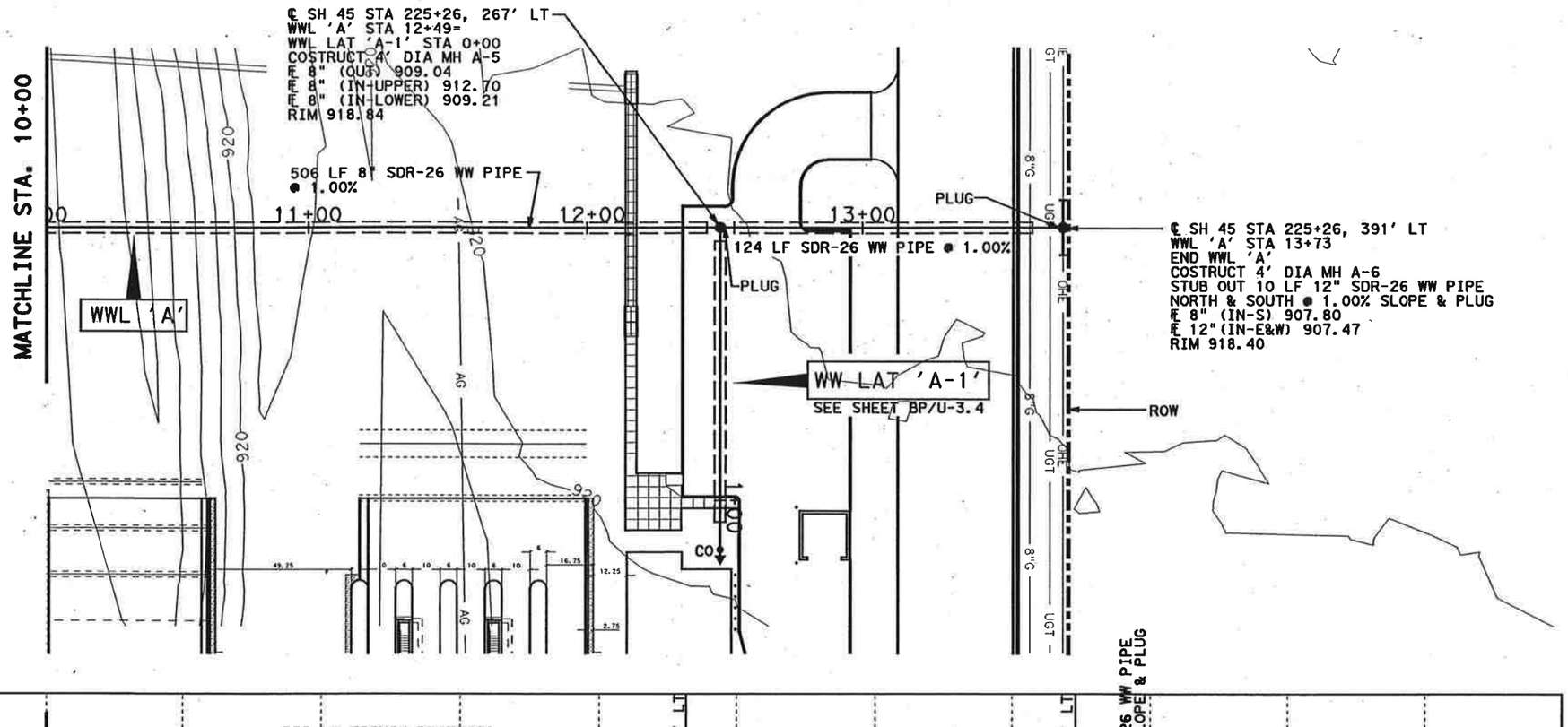

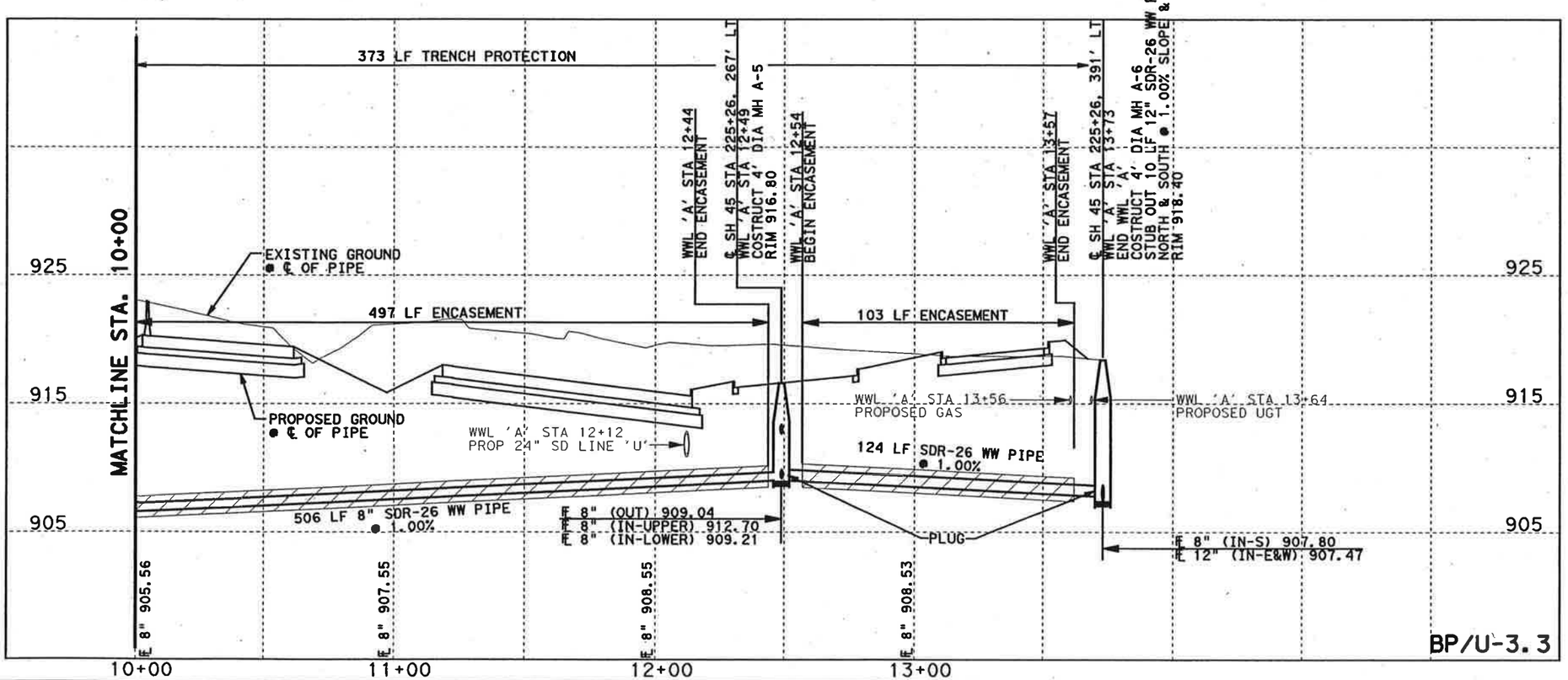

BP/U-3.3

LEGEND

- GATE VALVE
- PIPE REDUCER
- FIRE HYDRANT
- WATER METER
- WW MANHOLE
- WW CLEANOUT
- GROUND BOX TYPE 'D'
- POLE W/ RISER
- SWBT MANHOLE
- COMMUNICATIONS DUCTBANK
- ITS CONDUIT
- STEEL ENCASEMENT PIPE
- ROW

STATE OF TEXAS
JOHN W. STRYBOS
64259
LICENSED
PROFESSIONAL ENGINEER
4-18-2003

Texas Department of Transportation
© 2003 TEXAS TURNPIKE AUTHORITY DIVISION

HNTB ARCHITECTS ENGINEERS PLANNERS
The HNTB Companies

SH 45 TOLL PLAZAS

WASTEWATER LINE 'A' PLAN AND PROFILE

STA 10+00 - STA 13+73

BARRIER PLAZA ML3

SCALE: H 1"=50'
V 1"=10'

SHEET 3 OF 3

DGN: SSD	FED. RD. DIV. NO.	STATE	FEDERAL AID PROJECT NO.	HIGHWAY NO.
CHK. DSGN: RLR	6	TEXAS	TTA 2002 (243)	LOOP1/SH45
DWN: AED	STATE DISTRICT	COUNTY	CONTROL NO.	SECTION NO.	JOB NO.	SHEET NO.
CHK. DWN: RLR	14	TRAVIS/ WILLIAMSON	0683	01	069	

Pen Tables: Y:\33246\techprod\rdwy\plots\33246rpf.pen
Design Files: Y:\Jobs\33246\TECHPROD\Rdwy\DWG\DS009\14mbp03e03.dgn

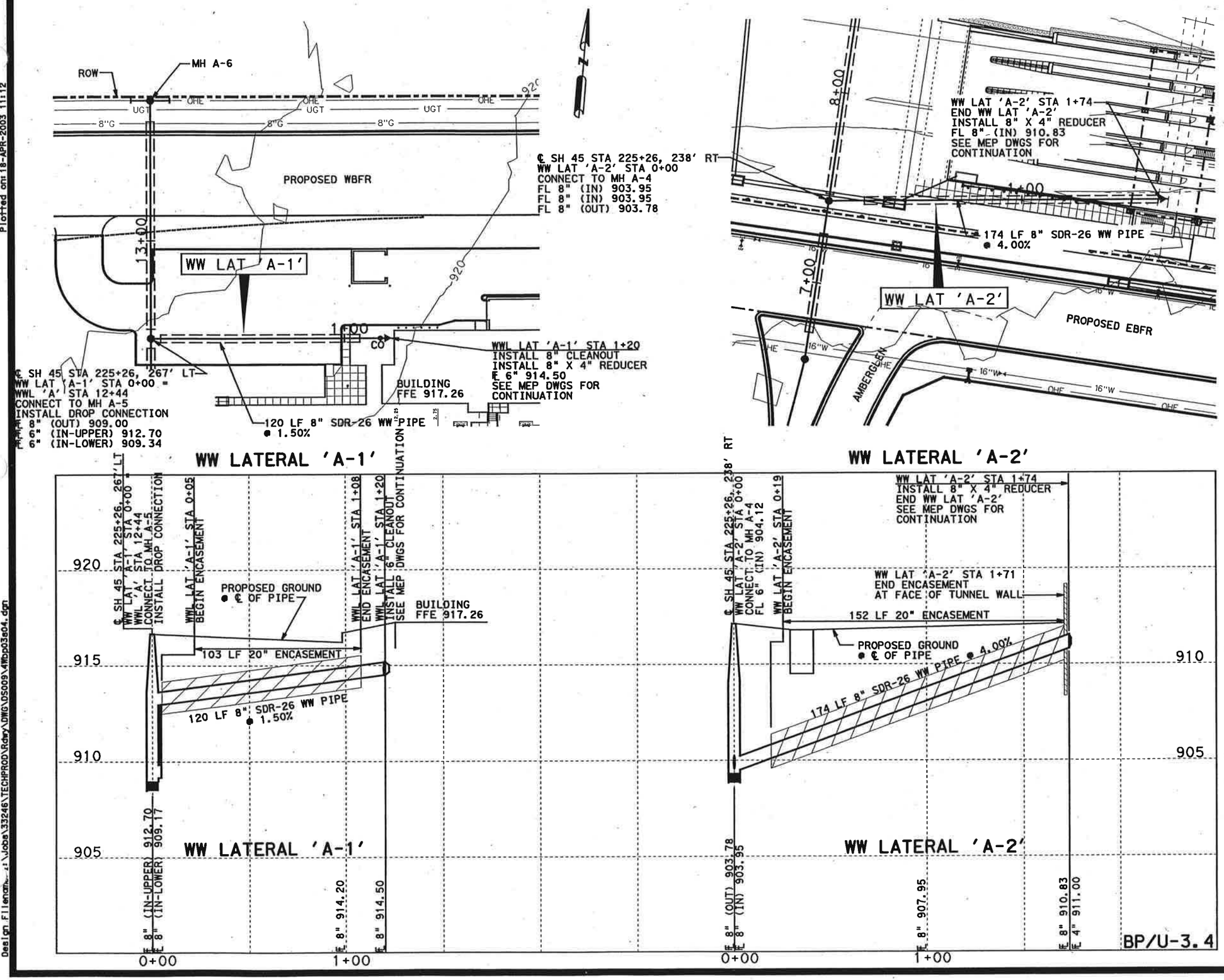

LEGEND

- GATE VALVE
- PIPE REDUCER
- FIRE HYDRANT
- WATER METER
- WW MANHOLE
- WW CLEANOUT
- GROUND BOX TYPE 'D'
- POLE W/ RISER
- SWBT MANHOLE
- COMMUNICATIONS DUCTBANK
- ITS CONDUIT
- STEEL ENCASEMENT PIPE
- ROW

STATE OF TEXAS
JOHN W. STRYBOS
64259
LICENSED
PROFESSIONAL ENGINEER

4-18-2003

Texas Department of Transportation
© 2003 TEXAS TURNPIKE AUTHORITY DIVISION

HNTB ARCHITECTS ENGINEERS PLANNERS
The HNTB Companies

SH 45 TOLL PLAZAS

WASTEWATER LATERALS

WW LAT 'A-1' STA 0+00-STA 1+20
WW LAT 'A-2' STA 0+00-STA 1+74

BARRIER PLAZA ML3

SCALE: H 1"=50' V 1"=5'

DGN: DDD	FED. RD. DIV. NO.	STATE	FEDERAL AID PROJECT NO.			HIGHWAY NO.
CHK DGN: JWS	6	TEXAS	TTA 2002 (243)			LOOP1/SH45
DWG: DDD	STATE DISTRICT	COUNTY	CONTROL NO.	SECTION NO.	JOB NO.	SHEET NO.
CHK DWG: JWS	14	TRAVIS/ WILLIAMSON	0683	01	069	

Scale: 50.000012:1.000000
Plotted on: 18-APR-2003 11:12
Pen Table: 33246\techprod\rdwy\plots\33246rpf.pen
Design Filename: ...\Jobs\33246\TECHPROD\Rdwy\DWG\DS009\4Wbp03s04.dgn

Texas Commission on Environmental Q

COPY

Investigation Report

TEXAS DEPARTMENT OF TRANSPORTATION

CN600803456

US 183 MAINLANES FRONTAGE DRAINAGE IMPROVEMENTS

RN102756582

Investigation # 743699 **Incident #**

Investigator: ZACH LANFEAR **Site Classification** COMMERCIAL

Conducted: 04/09/2009 -- 04/09/2009 **NAIC Code:** 237310

Program(s): EDWARDS AQUIFER

Investigation Type : Compliance Investigation **Location :** US 183 FATHOM CIRCLE & LAKELINE BLVD

Additional ID(s) : 11-98120101

Address: ; , **Activity Type :** REGION 11 - AUSTIN
EAPPNGRTRC - EAPP Non-Grant Recon

Principal(s) :

Role	Name
RESPONDENT	TEXAS DEPARTMENT OF TRANSPORTATION

Contact(s) :

Role	Title	Name	Phone	
Regulated Entity Contact	DISTRICT EROSION CONTROL COORDINATOR	MR BILLY BENNINGFIELD	Work	(512) 832-7348
Regulated Entity Mail Contact	AREA ENGINEER	MR JOHN R WAGNER PE	Work	(512) 930-5402

Other Staff Member(s) :

Role	Name
Supervisor	HEATHER BEATTY
Supervisor	CAROLYN RUNYON

Associated Check List

Checklist Name	Unit Name
GENERIC OTHER ISSUES AND/OR VIOLATIONS	Recharge Zone

Investigation Comments :

INTRODUCTION
On April 9, 2009, a reconnaissance investigation was conducted at the Texas Department of Transportation (TxDOT) owned and operated sedimentation/filtration water quality pond. No violations were alleged as a result of the investigation.

BACKGROUND
The subject water quality pond was approved under the US 183 Mainlanes, Frontage Roads and Drainage Improvements Water Pollution Abatement Plan (WPAP) by letter dated January 14, 1999 (EAPP File No. 11-98120101).

A compliance investigation was conducted on October 3 and 10, 2005, and two (2) violations were alleged. The first was for failure to maintain the sand filter and the second was for an unauthorized discharge. The violations were resolved on December 7 and 12, 2005, respectively. See investigation No. 433641.

GENERAL FACILITY AND PROCESS INFORMATION
The project is located in the Edwards Aquifer Recharge Zone. The 171.7 acre project has 144.2 acres of impervious cover (84%). A Notice of Construction was received on April 20, 1999. The subject water quality pond is identified as "sed/fil Pond 3" in the approved WPAP.

INVESTIGATION
On April 9, 2009, Mr. Zach Lanfear (the writer) with the TCEQ Austin Region Office was conducting a routine site assessment investigation for an unrelated project (Pond Springs Road WPAP (Investigation No. 743919, EAPP ID No. 11-09030301). The Pond Springs Road project is located directly adjacent to the subject pond. During the investigation I noticed the subject pond had an accumulation of trash, debris and black colored water, and had an unpleasant odor (see attached TCEQ Image Documentation, Attachment A). The stagnant odor indicated the water had been in the pond for some time.

On April 10, 2009, precipitation data was gathered from the National Weather Service and the City of Austin (see Attachment B). The data indicated that the last measurable rainfall event occurred on April 2, 2009; seven (7) days earlier than the April 9, 2009, investigation. Sedimentation/filtration water quality ponds are designed to drain from full within 24 hours and no later than 48 hours.

On March 7, 2009, a TCEQ Exit Interview Form (see Attachment C) was e-mailed to Mr. Billy Benningfield with TxDOT. The form identified an alleged violation for failure to maintain the water quality pond. The form also requested inspection records for the pond for the past 12 months. In the same e-mail, I requested: (1) that the cause of failure be identified, (2) the pond be maintained, (3) photos of the maintained pond and (4) monitoring of the pond after the next rainfall event.

On March 26, 2009, documentation was received from Mr. Benningfield via e-mail. In the e-mail, Mr. Benningfield stated the filtration pond had formed a crust of silt preventing drainage, on May 15, 2009, two (2) inches of silt saturated sand was removed and taken to a landfill and the pond was observed on May 19, 2009, after the two (2) inch rain event on May 16, 2009, and the pond had drained.

The e-mail also contained two (2) labeled images of the subject pond with sediment removed from the filtration area. The e-mail also contained an attachment of inspection and maintenance records beginning November 3, 2008, and ending March 19, 2009. The inspection and maintenance records appear to show that the respondent had inspected and maintained the pond as necessary once per month since November 2008. Since the pond was inspected monthly in accordance with the approved plan (see "The Inspection and Maintenance of Permanent Water Quality Control Devices" document in EAPP File No. 11-98120101") and since corrective action was taken to maintain the pond in a timely manner, no violation is alleged.

"The Inspection and Maintenance of Permanent Water Quality Control Devices" document also states that, " In addition to monthly inspections, an inspection will occur on the first working day, or as soon as practical after any rainfall event that may impact the system." This requirement will be reiterated as an additional issue.

CONCLUSION
A reconnaissance investigation conducted on April 9, 2009, documented a TxDOT owned and operated sedimentation/filtration water quality pond that appeared to not be draining. Failure to drain within 48 hours was confirmed with rainfall data. TxDOT took correction action and the pond was maintained on March 15, 2009. Inspection and maintenance records submitted by the respondent indicated that inspection and maintenance was being performed monthly for the past 6 months. Therefore, no violation was alleged and a general compliance letter dated June 8, 2009, was sent to

the responsible party.

No Violations Associated to this Investigation

Additional Issues

Description	Additional Comments
Item #1	The TCEQ would like to reiterate that the "The Inspection and Maintenance of Permanent Water Quality Control Devices" document approved under US 183 Mainlanes, Frontage Roads and Drainage Improvements Water Pollution Abatement Plan (EAPP File No. 11-98120101) states, "In addition to monthly inspections, an inspection will occur on the first working day, or as soon as practical after any rainfall event that may impact the system."

Signed _____ Environmental Investigator Date 6/4/2009

Signed _____ Supervisor Date 6/5/09

Attachments: (in order of final report submittal)

___Enforcement Action Request (EAR)

✓ Letter to Facility (specify type) : General Compliance w/ Summary of Investigation findings

Investigation Report

___Sample Analysis Results

___Manifests

___NOR

___Maps, Plans, Sketches

✓ Photographs

✓ Correspondence from the facility

✓ Other (specify) :

Attachments A - E

Buddy Garcia, *Chairman*
Larry R. Soward, *Commissioner*
Bryan W. Shaw, Ph.D., *Commissioner*
Mark R. Vickery, P.G., *Executive Director*

TEXAS COMMISSION ON ENVIRONMENTAL QUALITY

Protecting Texas by Reducing and Preventing Pollution

June 8, 2009

Mr. John Wagner, P.E.
Texas Department of Transportation
2727 S. Austin Avenue
Georgetown, Texas 78626

Re: Compliance at:
US 183 Main Lanes Frontage Drainage Improvements, southeast corner of the intersection at US 183 and Pond Springs Road, Austin (Williamson County), Texas
EAPP ID No.: 11-98120101

Dear Mr. Wagner:

On April 9, 2009, Mr. Zach Lanfear of the Texas Commission on Environmental Quality (TCEQ) Austin Region Office conducted an investigation of the above-referenced facility to evaluate compliance with applicable requirements for the Edwards Aquifer Protection Program. No violations are being alleged as a result of the investigation; however, please see the comment in the attached Summary of Investigation Findings.

The TCEQ appreciates your assistance in this matter and your compliance efforts to ensure protection of the State's environment. If you or members of your staff have any questions regarding these matters, please feel free to contact Mr. Zach Lanfear in the Austin Region Office at (512) 339-2929.

Sincerely,

Carolyn D. Runyon, Water Section Manager
FOR Austin Region Office

CDR/zcl

cc: Mr. Gary Lantrip, P.G., P.E., Texas Department of Transportation, Austin

printed on recycled paper using soy-based ink

Summary of Investigation Findings

US 183 MAINLANES FRONTAGE DRAINAGE IMPROVEMENTS Investigation # 743699

Investigation Date: 04/09/2009

, WILLIAMSON COUNTY,

Additional ID(s): 11-98120101

No Violations Associated to this Investigation

ADDITIONAL ISSUES

Description	Additional Comments
Item #1	The TCEQ would like to reiterate that the "The Inspection and Maintenance of Permanent Water Quality Control Devices" document approved under US 183 Mainlanes, Frontage Roads and Drainage Improvements Water Pollution Abatement Plan (EAPP File No. 11-98120101) states, "In addition to monthly inspections, an inspection will occur on the first working day, or as soon as practical after any rainfall event that may impact the system."

Texas Commission on Environmental Quality

Austin Region Office

Attachment A: Image Documentation

Investigation No.: 743699

Reconnaissance Investigation at Regulated Entity:
US 183 Mainlanes Frontage Drainage
Improvements

Date of TCEQ Investigation: April 9, 2009

TCEQ IMAGE DOCUMENTATION

Investigation No.:	743699	**Regulated Entity:**	US 183 Mainlanes Frontage Drainage Improvements		
Investigation Date:	April 9, 2009	**Photographer:**	Zach Lanfear	**County:**	Williamson

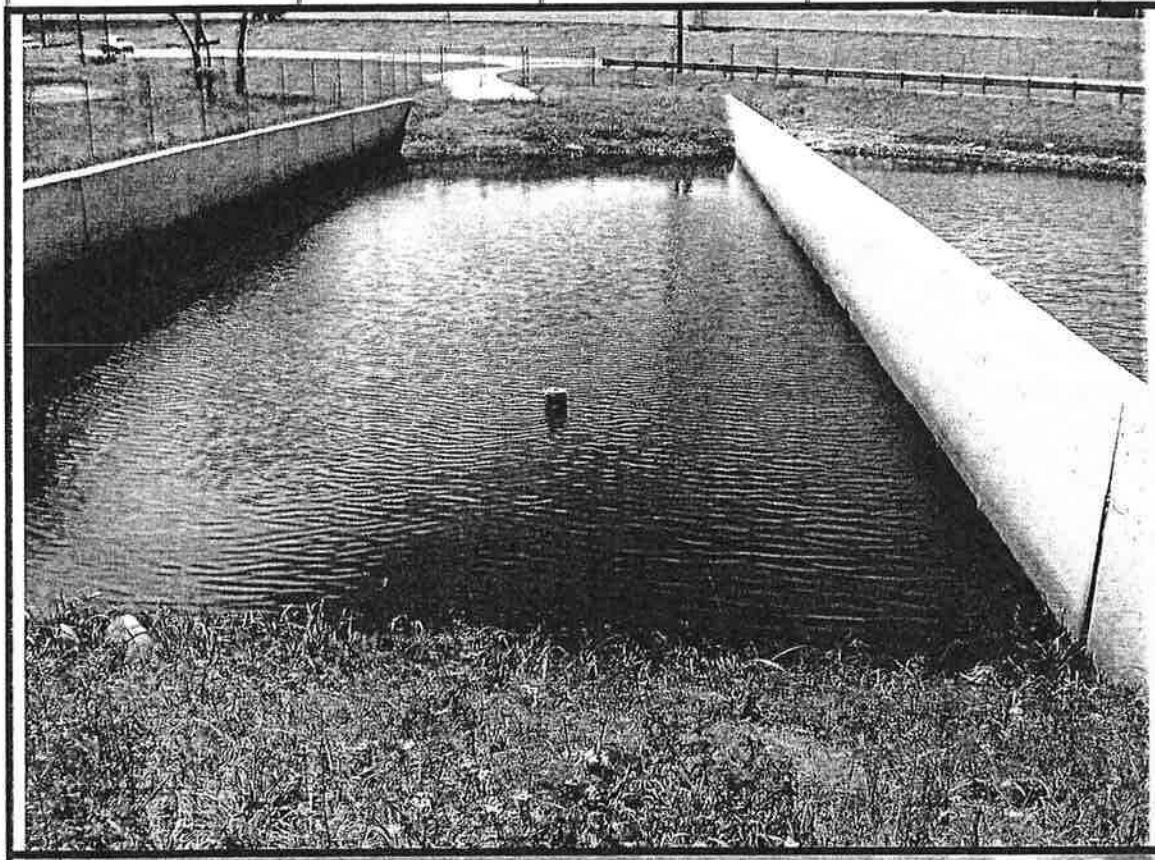

SUBJECT: Sedimentation/Filtration Water Quality Pond

COMMENTS: The basin in the center of the image is the filtration basin and the basin to the right is the sedimentation basin. The water was black and had a stagnant odor. The last measurable rainfall event occurred on April 2, 2009. The pond should have drained no later than 48 hours after the rainfall.

PHOTO #1

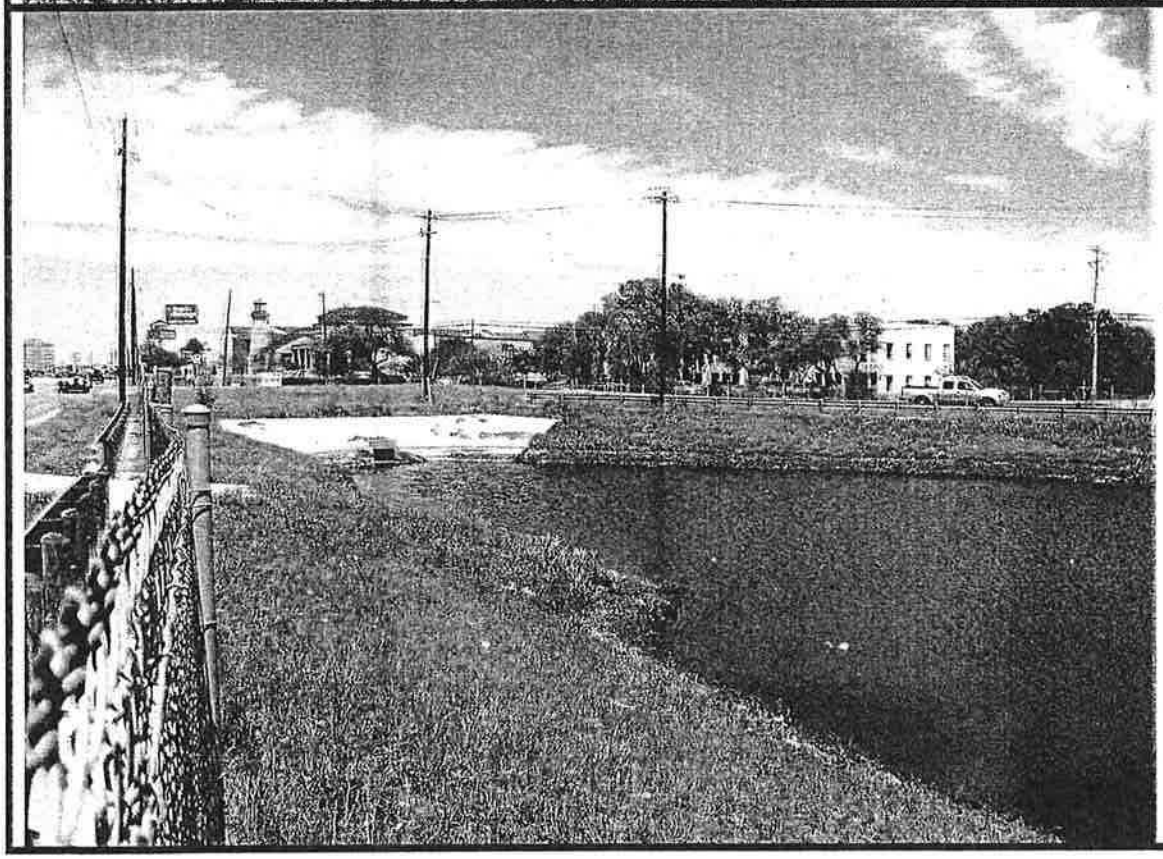

SUBJECT: Sedimentation/Filtration Water Quality Pond

COMMENTS: View facing north. The inlet structure can be seen in the center left of the photo. The water was black and had a stagnant odor. The last measurable rainfall event occurred on April 2, 2009. The pond should have drained no later than 48 hours after the rainfall.

PHOTO #2

TCEQ IMAGE DOCUMENTATION

Investigation No.:	743699	Regulated Entity:	US 183 Mainlanes Frontage Drainage Improvements		
Investigation Date:	April 9, 2009	Photographer:	Zach Lanfear	County:	Williamson

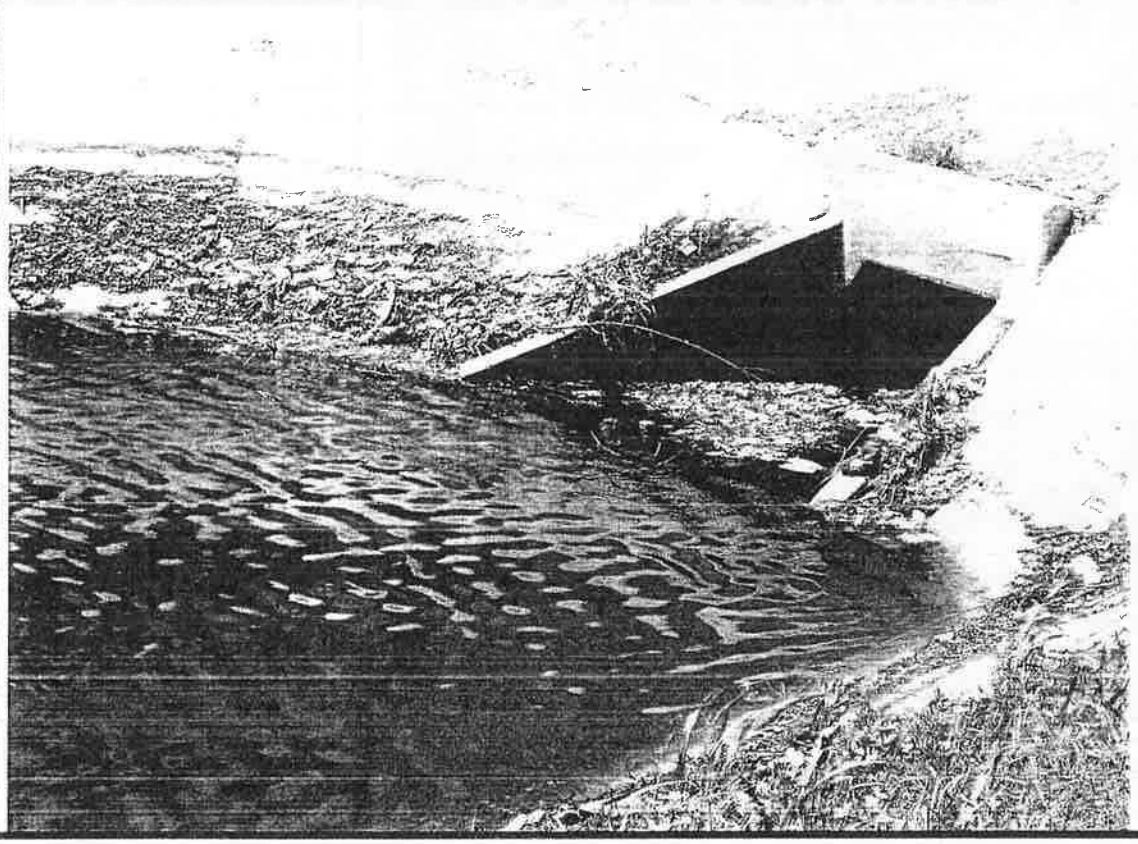

SUBJECT:
Sedimentation/Filtration Water Quality Pond

COMMENTS: Trash and other debris had collected at the high water mark and in the inlet.

PHOTO #3

Texas Commission on Environmental Quality

Austin Region Office

Attachment B: Precipitation Data

Investigation No.: 743699

Reconnaissance Investigation at Regulated Entity:
US 183 Mainlanes Frontage Drainage
Improvements

Date of TCEQ Investigation: April 9, 2009

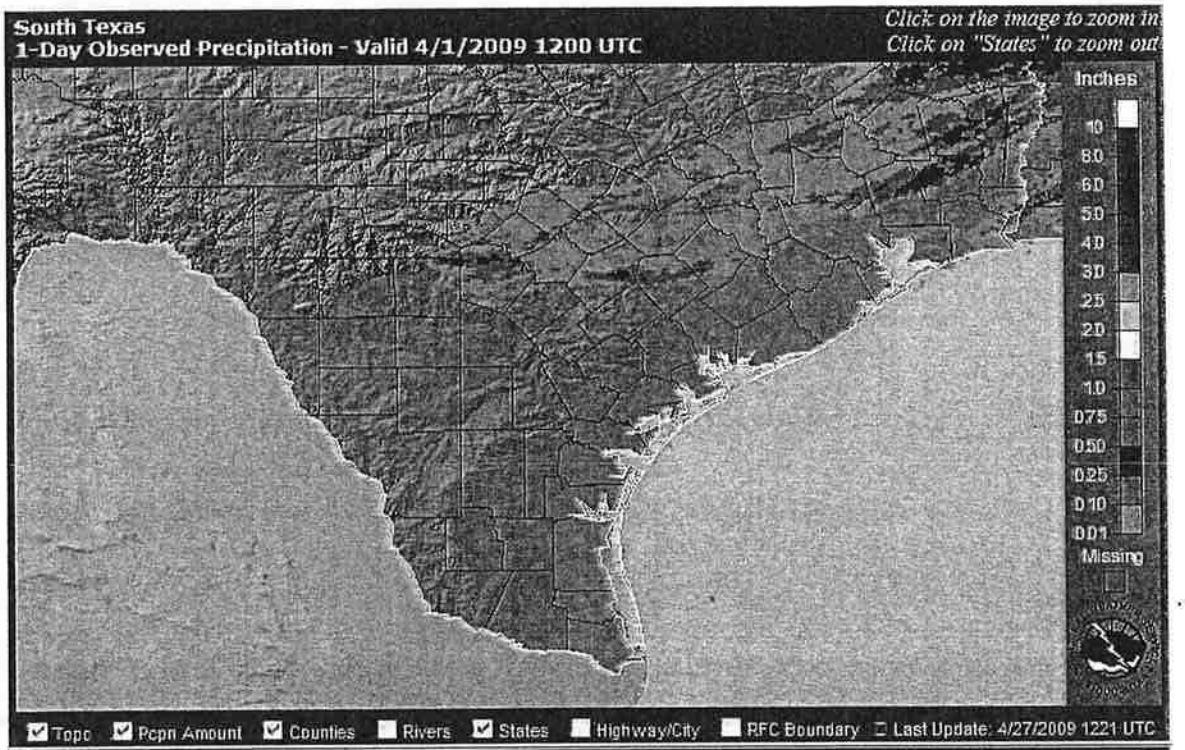
South Texas
1-Day Observed Precipitation - Valid 4/1/2009 1200 UTC
Click on the image to zoom in
Click on "States" to zoom out
Inches
10
8.0
6.0
5.0
4.0
3.0
2.5
2.0
1.5
1.0
0.75
0.50
0.25
0.10
0.01
Missing
Topo
Pcpn Amount
Counties
Rivers
States
Highway/City
RFC Boundary
Last Update: 4/27/2009 1221 UTC

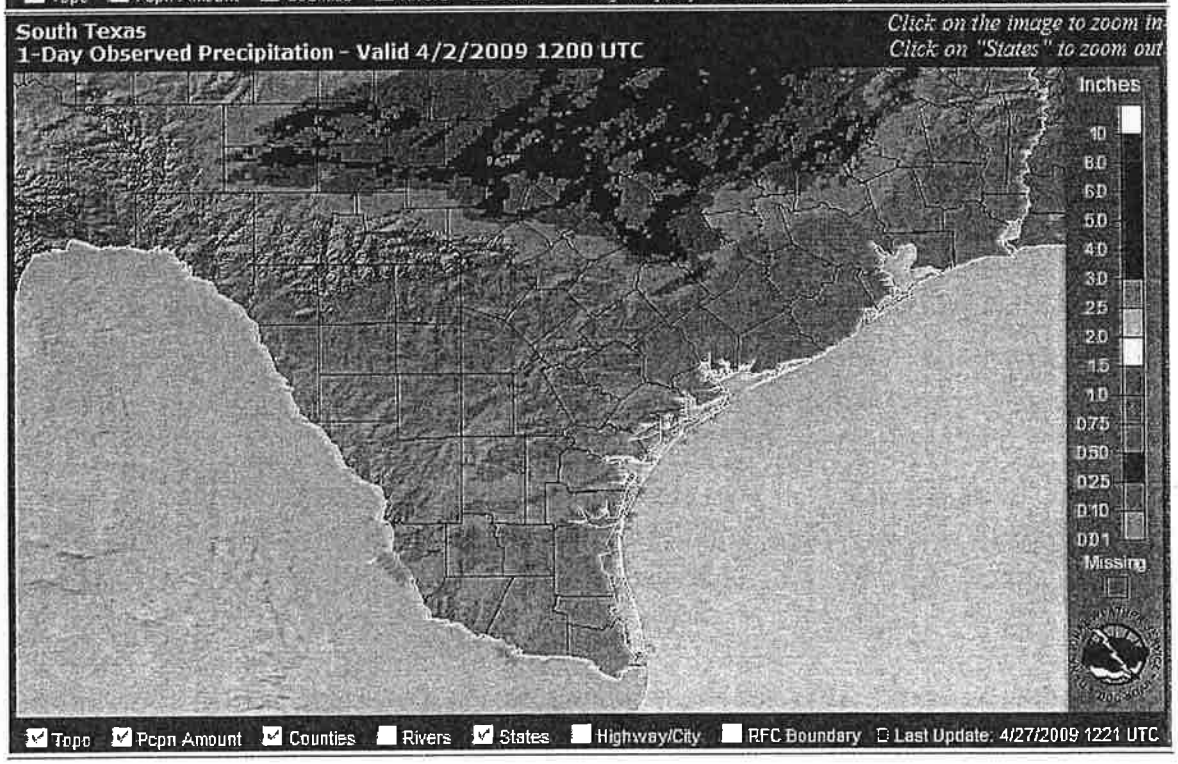
South Texas
1-Day Observed Precipitation - Valid 4/2/2009 1200 UTC
Click on the image to zoom in
Click on "States" to zoom out
Inches
10
8.0
6.0
5.0
4.0
3.0
2.5
2.0
1.5
1.0
0.75
0.50
0.25
0.10
0.01
Missing
Topo
Pcpn Amount
Counties
Rivers
States
Highway/City
RFC Boundary
Last Update: 4/27/2009 1221 UTC

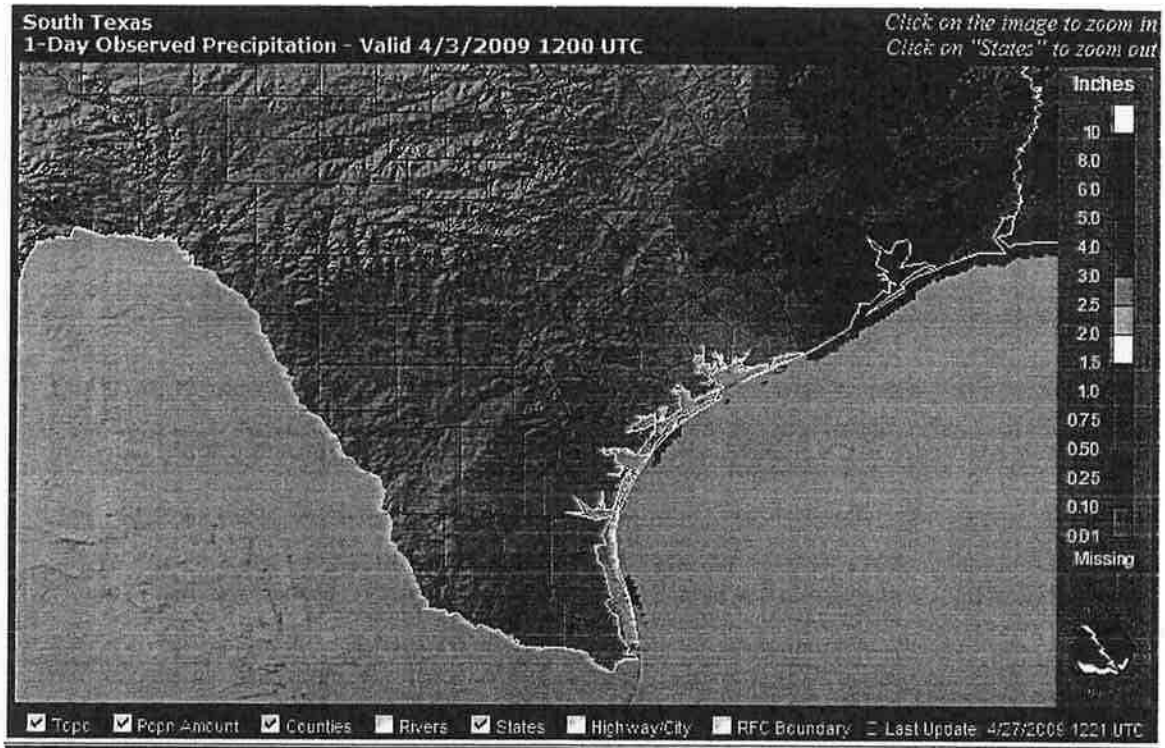
South Texas
1-Day Observed Precipitation - Valid 4/3/2009 1200 UTC
Click on the image to zoom in
Click on "States" to zoom out
Inches
10
8.0
6.0
5.0
4.0
3.0
2.5
2.0
1.5
1.0
0.75
0.50
0.25
0.10
0.01
Missing
Topo
Pcpn Amount
Counties
Rivers
States
Highway/City
RFC Boundary
Last Update: 4/27/2009 1221 UTC

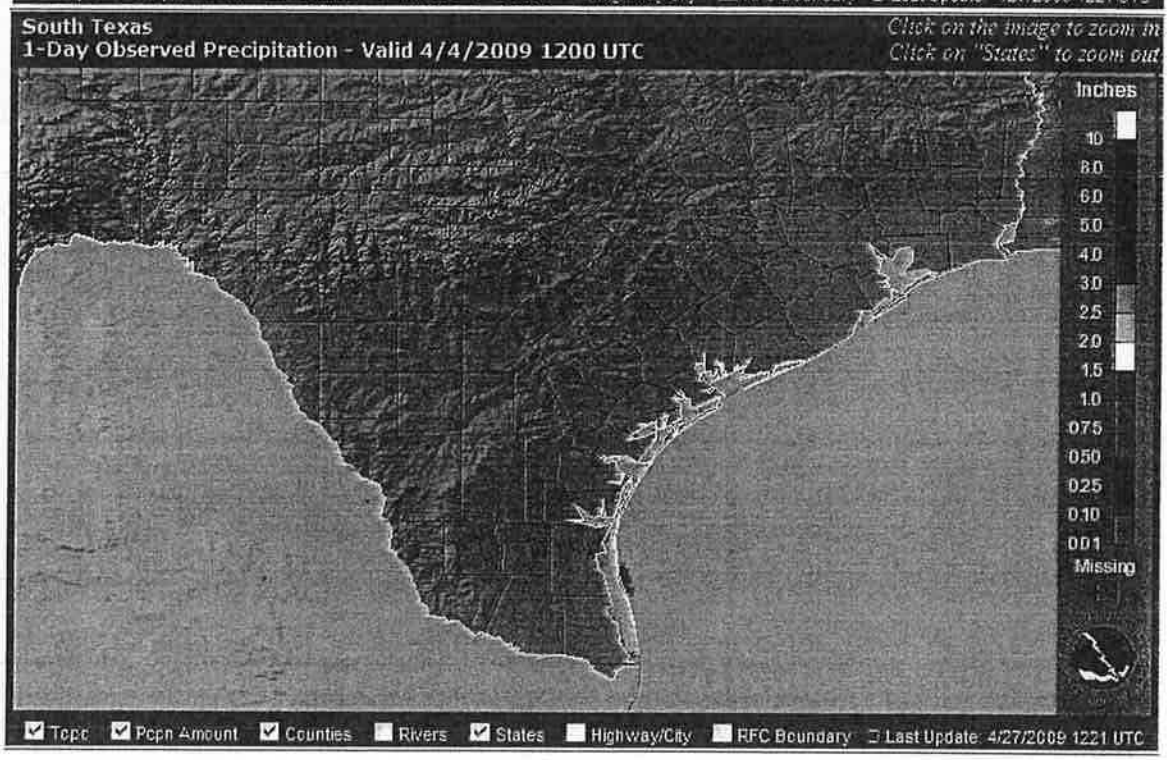
South Texas
1-Day Observed Precipitation - Valid 4/4/2009 1200 UTC
Click on the image to zoom in
Click on "States" to zoom out
Inches
10
8.0
6.0
5.0
4.0
3.0
2.5
2.0
1.5
1.0
0.75
0.50
0.25
0.10
0.01
Missing
Topo
Pcpn Amount
Counties
Rivers
States
Highway/City
RFC Boundary
Last Update: 4/27/2009 1221 UTC

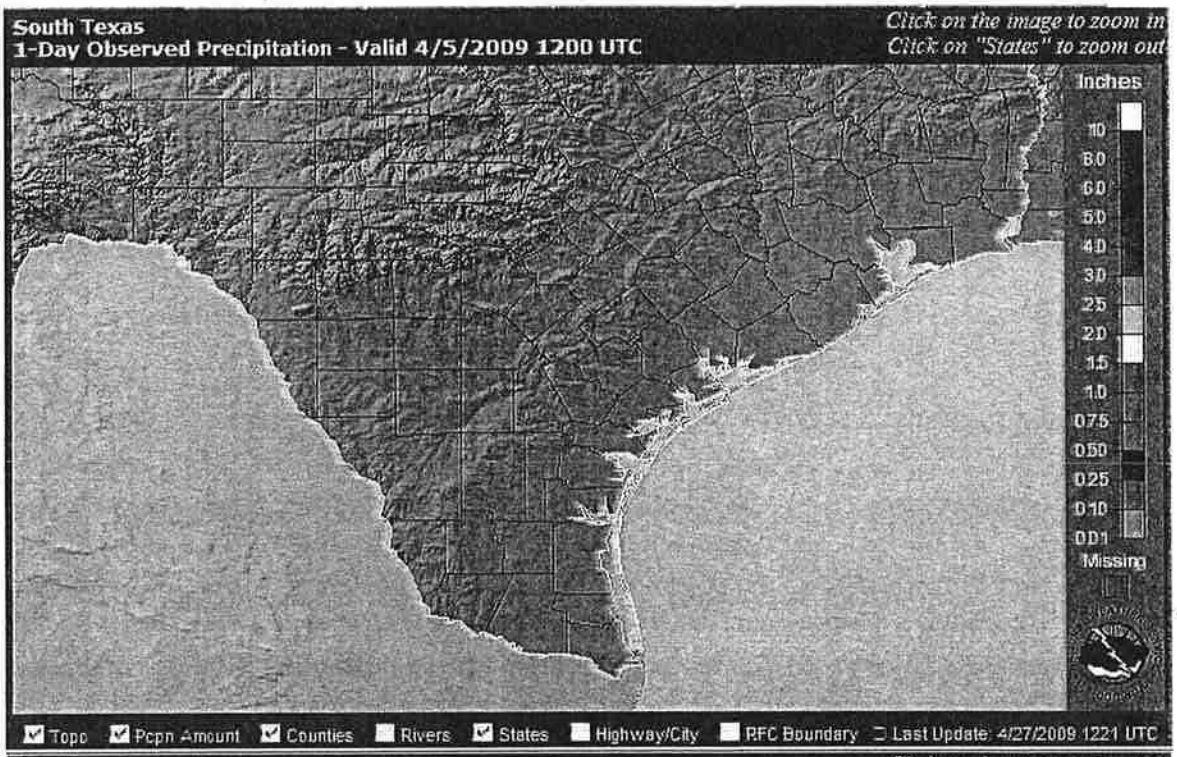
South Texas
1-Day Observed Precipitation - Valid 4/5/2009 1200 UTC
Click on the image to zoom in
Click on "States" to zoom out
Inches
10
8.0
6.0
5.0
4.0
3.0
2.5
2.0
1.5
1.0
0.75
0.50
0.25
0.10
0.01
Missing
Topo
Pcpn Amount
Counties
Rivers
States
Highway/City
RFC Boundary
Last Update: 4/27/2009 1221 UTC

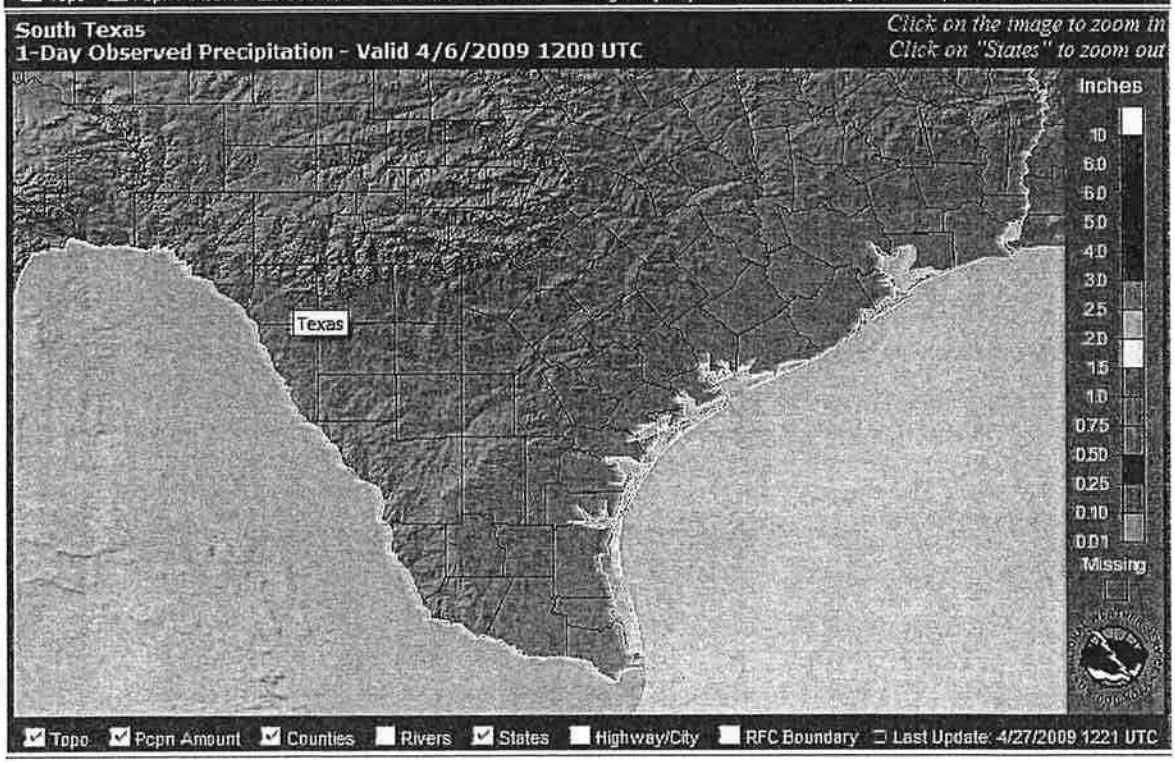
South Texas
1-Day Observed Precipitation - Valid 4/6/2009 1200 UTC
Click on the image to zoom in
Click on "States" to zoom out
Inches
10
8.0
6.0
5.0
4.0
3.0
2.5
2.0
1.5
1.0
0.75
0.50
0.25
0.10
0.01
Missing
Texas
Topo
Pcpn Amount
Counties
Rivers
States
Highway/City
RFC Boundary
Last Update: 4/27/2009 1221 UTC

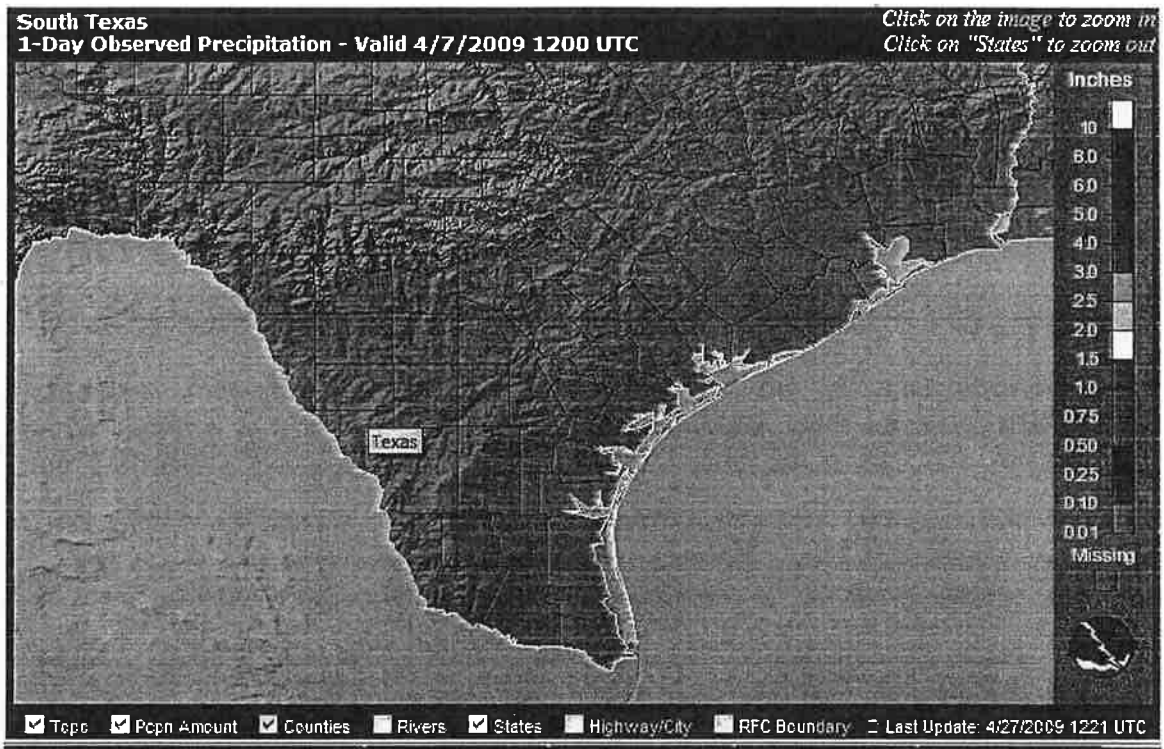
South Texas
1-Day Observed Precipitation - Valid 4/7/2009 1200 UTC
Click on the image to zoom in
Click on "States" to zoom out
Inches
10
8.0
6.0
5.0
4.0
3.0
2.5
2.0
1.5
1.0
0.75
0.50
0.25
0.10
0.01
Missing
Texas
Topo
Pcpn Amount
Counties
Rivers
States
Highway/City
RFC Boundary
Last Update: 4/27/2009 1221 UTC

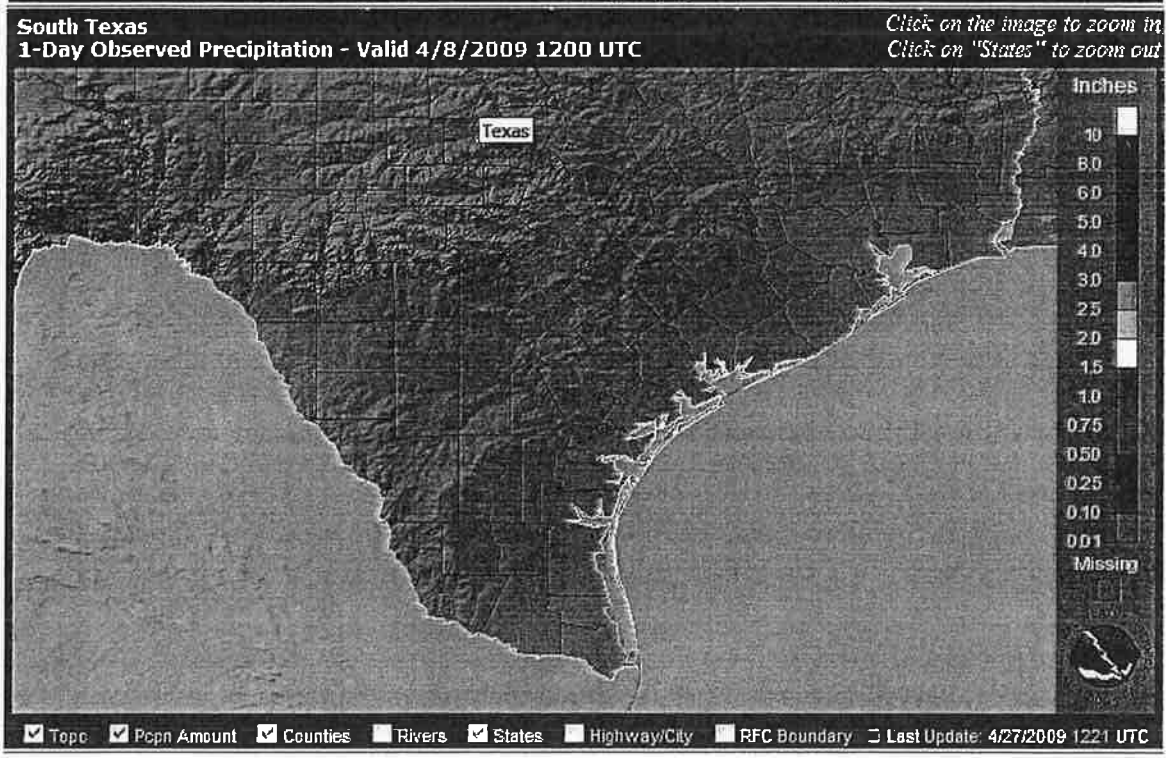
South Texas
1-Day Observed Precipitation - Valid 4/8/2009 1200 UTC
Click on the image to zoom in
Click on "States" to zoom out
Inches
10
8.0
6.0
5.0
4.0
3.0
2.5
2.0
1.5
1.0
0.75
0.50
0.25
0.10
0.01
Missing
Texas
Topo
Pcpn Amount
Counties
Rivers
States
Highway/City
RFC Boundary
Last Update: 4/27/2009 1221 UTC

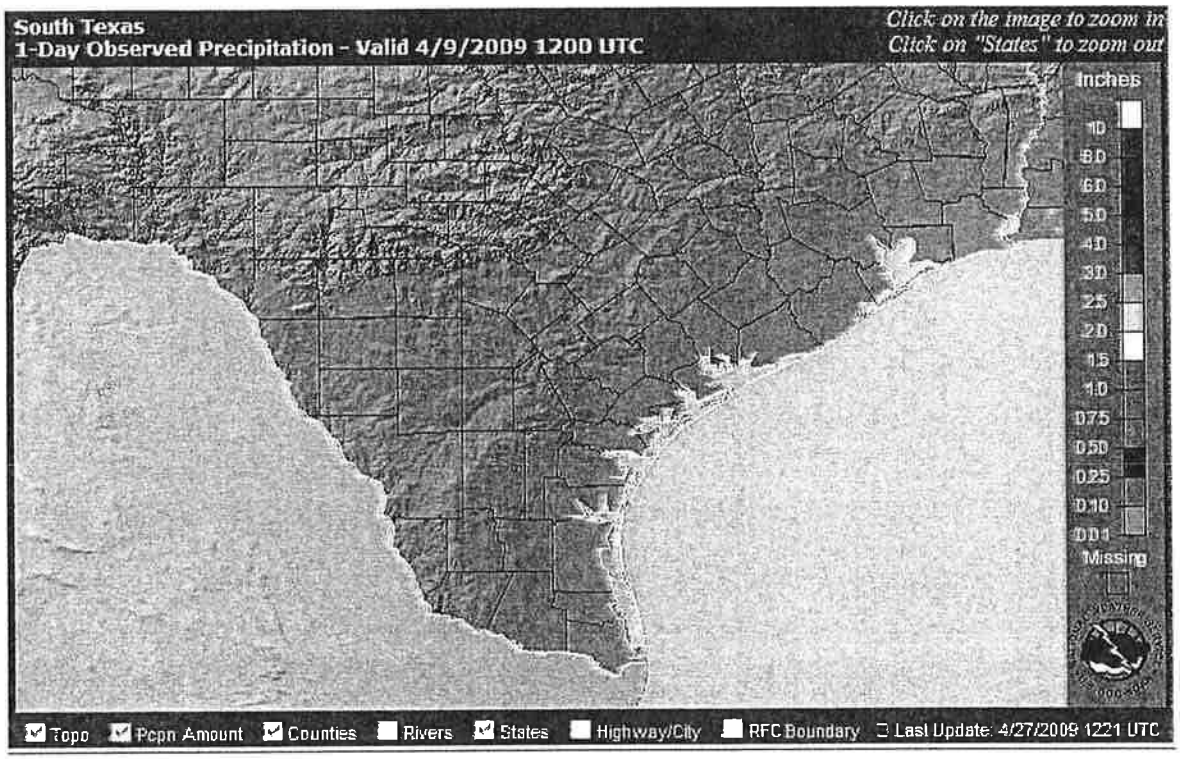

Citation:

National Weather Service. "AHPS Precipitation Analysis." . May 13, 2009. National Oceanic and Atmospheric Administration. April 10, 2009 <http://water.weather.gov/>.

Weather Data for Austin, Texas

04/01/09	75.2°	48.2°	0.00"	0.16"	0.06"
04/02/09	71.6°	55.4°	0.24"	0.16"	0.06"
04/03/09	77°	42.8°	0.00"	0.16"	0.06"
04/04/09	84.2°	55.4°	0.00"	0.12"	0.04"
04/05/09	69.8°	53.6°	0.00"	0.20"	0.07"
04/06/09	62.6°	42.8°	0.00"	0.16"	0.06"
04/07/09	77°	41°	0.00"	0.12"	0.04"
04/08/09	86°	50°	0.00"	0.20"	0.07"
04/09/09	93.2°	59°	0.00"	0.16"	0.06"

Citation:

Austin Water Utility Conservation Division. "Weather Data for Austin, Texas." . 1995. City of Austin. May 14, 2009 <http://www.ci.austin.tx.us/watercon/rainfall_data.cfm>.

Texas Commission on Environmental Quality

Austin Region Office

Attachment C: Exit Interview Form

Investigation No.: 743699

Reconnaissance Investigation at Regulated Entity:
US 183 Mainlanes Frontage Drainage
Improvements

Date of TCEQ Investigation: April 9, 2009

Zach Lanfear - TxDOT Water Quality Pond

From: Zach Lanfear
To: Billy Benningfield
Date: 5/7/2009 1:14 PM
Subject: TxDOT Water Quality Pond
CC: Gary Lantrip
Attachments: 11-98120101 - US Mainlanes Frontage Drainage Improvements Exit Interview Form.pdf

Billy,

I would like to followup on our conversation from yesterday. The sedimentation/filtration pond located at US-183 and Pond Springs Rd is failing to drain within 48 hours. TCEQ observed the full water quality pond on April 9, 2009, and measurable rainfall had not occurred since April 2, 2009. I am requesting maintenance and inspection records from the past 12 months for the pond. Please submit these records to the TCEQ Austin Region Office within 30 days from today.

You said that mainetance work has begun on pond. I would like to reiterate that any water pumped from the water quality is a waste and must be treated as such and disposed of properly.

Please keep me up to date on the status of the maintenance. Based on our conversation yesterday, its sounds like the pond can be repaired in under 30 days. Depending on the cause and severity of the failure we may require you to submit a compliance schedule for the pond. This should only be necessary if there is a major issue with the pond that will take more than 30 days to repair.

In order to bring the pond into compliance please:

1) Identify the cause(s) of the failure and report the findings to the TCEQ Austin Region Office.
2) Maintain the pond. (Already underway per our conversation yesterday)
3) Submit photographs with descriptions of the maintained pond.
4) Monitor the pond after the next rainfall event after maintenance to see if it drains within 48 hours. Report the results to the TCEQ Austin Region Office.

Attached is a copy of the TCEQ Exit Interview Form. It outlines the alleged violation and records request.

Thank you for your cooperation,

Zach Lanfear
Environmental Investigator
Texas Commission on Environmental Quality
2800 South IH-35, Suite 100
Austin, TX 78704
(512) 339-2929
ZLanfear@tceq.state.tx.us

Please consider the environment before printing this e-mail

TCEQ EXIT INTERVIEW FORM: Potential Violations and/or Records Requested

Regulated Entity/Site Name	US 183 Mobile Bridge Over the Lavaca			**TCEQ Add. ID No. RN No. (optional)**	
Investigation Type	comp	**Contact Made In-House (Y/N)** N	**Purpose of Investigation**	Recon	
Regulated Entity Contact	T. Cory Lodge		**Telephone No.**	(512) 552-9103	**Date Contacted** 3/6/2009
Title	P.E., PE, Tx Dot		**Fax No.**		**Date Faxed** 3/9/2009

NOTICE: The information provided in this form is intended to provide clarity to issues that have arisen during the investigation process between the TCEQ and the regulated entity named above and *does not represent final TCEQ findings related to violations*. Any potential or alleged violations discovered after the date on this form will be communicated by telephone to the regulated entity representative prior to the issuance of a notice of violation or enforcement. Conclusions drawn from this investigation, including additional violations or potential violations discovered (if any) during the course of this investigation, will be documented in a final investigation report.

Issue		**For Records Request: identify the necessary records, the company contact and date due to the agency. For Alleged and Potential Violation issues: include the rule in question with the clearly described potential problem. Other type of issues: fully describe.**	
No.	**Type[1]**	**Rule Citation (if known)**	**Description of Issue**
1	AV	30 TAC 213.4(k)	Failure to maintain the sediment and filtration water quality pond located at US 183 and Red Sprgs Rd. The pond is dedicated to WPAP #13-1 & the approved WPAP plan was not implemented.
1	RR		Please submit signed and notarized maintenance records for the pond for the past 12 months.

[1]Issue Type Can Be One or More of: AV (Alleged Violation), PV (Potential Violation), O (Other), or RR (Records Request)

Did the TCEQ document the regulated entity named above operating without proper authorization?	☐ Yes	☒ No
Did the investigator advise the regulated entity representative that continued operation is not authorized?	☐ Yes	☒ No

Document Acknowledgment. Signature on this document establishes only that the regulated entity (company) representative received a copy of this document and associated continuation pages on the date noted. If contact was made by telephone, document will be faxed to regulated entity; therefore, signature not required.

	3/9/2009		
Investigator Name (Signed & Printed)	**Date**	**Regulated Entity Representative Name (Signed & Printed)**	**Date**

If you have questions about any information on this form, please contact your local TCEQ Regional Office.
Individuals are entitled to request and review their personal information that the agency gathers on its forms. They may also have any errors in their information corrected. To review such information, call 512-239-3282.

White Copy: Regulated Entity Representative Yellow Copy: TCEQ

(Note: Use additional pages as necessary) Page 1 of 1

TCEQ-20085 (Rev. 6/07)

Zach Lanfear - TxDOT Water Quality Pond

From: Zach Lanfear
To: Billy Benningfield
Date: 5/7/2009 1:14 PM
Subject: TxDOT Water Quality Pond
CC: Gary Lantrip
Attachments: 11-98120101 - US Mainlanes Frontage Drainage Improvements Exit Interview Form.pdf

Billy,

I would like to followup on our conversation from yesterday. The sedimentation/filtration pond located at US-183 and Pond Springs Rd is failing to drain within 48 hours. TCEQ observed the full water quality pond on April 9, 2009, and measurable rainfall had not occurred since April 2, 2009. I am requesting maintenance and inspection records from the past 12 months for the pond. Please submit these records to the TCEQ Austin Region Office within 30 days from today.

You said that mainetance work has begun on pond. I would like to reiterate that any water pumped from the water quality is a waste and must be treated as such and disposed of properly.

Please keep me up to date on the status of the maintenance. Based on our conversation yesterday, its sounds like the pond can be repaired in under 30 days. Depending on the cause and severity of the failure we may require you to submit a compliance schedule for the pond. This should only be necessary if there is a major issue with the pond that will take more than 30 days to repair.

In order to bring the pond into compliance please:

1) Identify the cause(s) of the failure and report the findings to the TCEQ Austin Region Office.
2) Maintain the pond. (Already underway per our conversation yesterday)
3) Submit photographs with descriptions of the maintained pond.
4) Monitor the pond after the next rainfall event after maintenance to see if it drains within 48 hours. Report the results to the TCEQ Austin Region Office.

Attached is a copy of the TCEQ Exit Interview Form. It outlines the alleged violation and records request.

Thank you for your cooperation,

Zach Lanfear
Environmental Investigator
Texas Commission on Environmental Quality
2800 South IH-35, Suite 100
Austin, TX 78704
(512) 339-2929
ZLanfear@tceq.state.tx.us

Please consider the environment before printing this e-mail

TCEQ EXIT INTERVIEW FORM: Potential Violations and/or Records Requested

Regulated Entity/Site Name	US 183 Mainlanes Frontage Drainage Improvements			**TCEQ Add. ID No. RN No. (optional)**	11-98120101		
Investigation Type	EAPP	**Contact Made In-House (Y/N)**	N	**Purpose of Investigation**	Recon		
Regulated Entity Contact	J. Gary Lantrip			**Telephone No.**	(512) 832-7103	**Date Contacted**	5/6/2009
Title	P.G., P.E., TxDot			**Fax No.**		**Date ~~Faxed~~ EMAILED**	5/7/2009

NOTICE: The information provided in this form is intended to provide clarity to issues that have arisen during the investigation process between the TCEQ and the regulated entity named above and *does not represent final TCEQ findings related to violations.* Any potential or alleged violations discovered after the date on this form will be communicated by telephone to the regulated entity representative prior to the issuance of a notice of violation or enforcement. Conclusions drawn from this investigation, including additional violations or potential violations discovered (if any) during the course of this investigation, will be documented in a final investigation report.

Issue		**For Records Request: identify the necessary records, the company contact and date due to the agency. For Alleged and Potential Violation issues: include the rule in question with the clearly described potential problem. Other type of issues: fully describe.**	
No.	**Type[1]**	**Rule Citation (if known)**	**Description of Issue**
1	AV	30TAC 213.4(K)	Failure to maintain the sedimentation/filtration water quality pond located at US-183 and Pond Springs Road. The pond is identified as sed/fil Pond 3 in the approved WPAP (EAPP ID No: 11-98120101.
2	RR		Please submit inspection and maintenance records for the pond for the past 12 months.

[1]Issue Type Can Be One or More of: AV (Alleged Violation), PV (Potential Violation), O (Other) or RR (Records Request)

Did the TCEQ document the regulated entity named above operating without proper authorization?	☐ Yes	☒ No
Did the investigator advise the regulated entity representative that continued operation is not authorized?	☐ Yes	☒ No

Document Acknowledgment. Signature on this document establishes only that the regulated entity (company) representative received a copy of this document and associated continuation pages on the date noted. If contact was made by telephone, document will be faxed to regulated entity; therefore, signature not required.

	5/7/2009		
Investigator Name (Signed & Printed)	**Date**	**Regulated Entity Representative Name (Signed & Printed)**	**Date**

If you have questions about any information on this form, please contact your local TCEQ Regional Office.
Individuals are entitled to request and review their personal information that the agency gathers on its forms. They may also have any errors in their information corrected. To review such information, call 512-239-3282.

White Copy: Regulated Entity Representative Yellow Copy: TCEQ

(Note: Use additional pages as necessary) Page 1 of 1

TCEQ-20085 (Rev. 6/07)

Texas Commission on Environmental Quality

Austin Region Office

Attachment D: E-mail Correspondence

Investigation No.: 743699

Reconnaissance Investigation at Regulated Entity:
US 183 Mainlanes Frontage Drainage
Improvements

Date of TCEQ Investigation: April 9, 2009

From: "Gary Lantrip" <JLANTRI@dot.state.tx.us>
To: "kevin Smith" <KSMITH@tceq.state.tx.us>
Date: 4/29/2009 3:20 PM
Subject: Filtration Pond - Pond Springs @ US 183 nbfr.

Kevin,

Regarding your mention of the Water Quality Pond performance (at location above), I've checked with Mr. Benningfield, the coordinator for BMPs. He recalls the last maintenance for this pond in 2007. The pond was drained, and the top ½ inch of the sand filter was removed and replaced. He is aware that after the recent rains the drawdown times are excessive.

Technically, the pond still "works" but certainly needs some sort of remedial adjustment.

I wanted you to know that we will reassess what may be causing this problem and will keep you informed.

J. Gary Lantrip, P.G., P.E.
Texas Department of Transportation Austin District - 7901 N. IH 35
(512) 832-7103

Texas Commission on Environmental Quality

Austin Region Office

Attachment E: Inspection and Maintenance Documentation from Respondent

Investigation No.: 743699

Reconnaissance Investigation at Regulated Entity: US 183 Mainlanes Frontage Drainage Improvements

Date of TCEQ Investigation: April 9, 2009

From: "Billy Benningfield" <BBENNIN@dot.state.tx.us>
To: "Zach Lanfear" <ZLanfear@tceq.state.tx.us>
Date: 5/26/2009 3:53 PM
Subject: Re: Fwd: TxDOT Water Quality Pond

>>> Thomas Brown 5/26/2009 8:56 AM >>>
The bolded text is our reply to the posed questions.

1) Identify the cause(s) of the failure and report the findings to the TCEQ Austin Region Office.
The filtration pond had formed a crust of silt that prevented the storm water from entering the drain tubes.

2) Maintain the pond. (Already underway per our conversation yesterday)
The storm water Fasility was dewatered. We then rented a skid steer track loader on May 15th, 2009 and removed approximately two inches of silt saturated filtration sand from the pond and hauled to the landfill. We also mowed the entire pond area and removed litter.

3) Submit photographs with descriptions of the maintained pond.
Printed and sent to B Benningfield with Inspection reports.

4) Monitor the pond after the next rainfall event after maintenance to see if it drains within 48 hours. Report the results to the TCEQ Austin Region Office.
On May 16th, 2009 we had approximately two inches of rain that collected in the rain gage at the pond. On May 19th, we inspected the pond and found that the storm water had drained from the pond.

If you have any questions or need more information, please feel free to contact me. 845-6067

Texas Department of Transportation

H.M.T. MAINTENANCE CHECKLIST FORM:

Name of Inspector: Jimmy Holland **Date:** 11/3/08

Location: County: 246 Roadway: 183 Pond Springs

Inventory Code Name/Number: 183 Pond Springs

Type of Inspection (check one): Scheduled Visit ☑, Spill Visit ☐, Other Visit ☐

Weather: Estimated Rainfall 1" ☑, 2" ☐, 3" ☐, 4" ☐, or ____

Summary of Inspection: Very Little water Lot of trash.

Actions Taken: Pick up Trash

Supervisors Signature: [signature]

Texas Department of Transportation

H.M.T. MAINTENANCE CHECKLIST FORM:

Name of Inspector: Jimmy Holland **Date:** 1/2/09

Location: County: 246 Roadway: 183 Pondsprings

Inventory Code Name/Number: 183 pondsprings

Type of Inspection (check one): Scheduled Visit ☑, Spill Visit ☐, Other Visit ☐

Weather: Estimated Rainfall 1" ☐, 2" ☐, 3" ☐, 4" ☐, or None

Summary of Inspection: No Water Lot of Trash

Actions Taken: Pick up Trash.

Supervisors Signature: [signature]

Texas Department of Transportation

H.M.T. MAINTENANCE CHECKLIST FORM:

Name of Inspector: Jimmy Holland **Date:** 3/3/09

Location: County: 246 Roadway: 183 Pond Springs

Inventory Code Name/Number: 183 & Pond Springs

Type of Inspection (check one): Scheduled Visit ☑, Spill Visit ☐, Other Visit ☐

Weather: Estimated Rainfall 1" ☐, 2" ☑, 3" ☐, 4" ☐, or ____

Summary of Inspection: Half full very little trash

Actions Taken: Pick up trash

Supervisors Signature: [signature]

Texas Department of Transportation

H.M.T. MAINTENANCE CHECKLIST FORM:

Name of Inspector: Jimmy Holland **Date:** 5/19/09

Location: County: 246 Roadway: 183 Bonds Springs

Inventory Code Name/Number: Bonds Springs

Type of Inspection (check one): Scheduled Visit ☐, Spill Visit ☐, Other Visit ☐

Weather: Estimated Rainfall 1" ☐, 2" ☑, 3" ☐, 4" ☐, or ____

Summary of Inspection: Very Little Water Pick up Trash

Very Little Trash (GD)

Actions Taken:

Supervisors Signature: [signature]



CLEAN & SCRAPE CRUST / FRI. MAY 15, 2009

The Inspection and Maintenance of Permanent Water Quality Control Devices

Texas Department of Transportation
Austin District

FOREWORD:

The existing Memorandum of Understanding (MOU) between the Texas Department of Transportation (TxDOT) and the Texas Natural Resource Conservation Commission (TNRCC) addresses the maintenance of permanent water quality control structures. TxDOT has been constructing permanent water quality controls, specifically for compliance of TNRCC regulations since 1990. These controls are the mitigation for the change in quantity and quality of storm water that leaves the roadway surface. The intent is to reduce the potential for impacts to the Edwards Aquifer as well as surface water flow. The areas where the host rock of this aquifer is exposed on the surface is called the Recharge Zone. When roadway projects are located over this zone, a Water Pollution Abatement Plan (WPAP) is required. The WPAP is submitted to secure TNRCC approval for the project and its proposed water quality controls. The TNRCC requires a prescribed maintenance plan for the permanent controls that will continue to operate after completion of the project. This Maintenance Plan will provide a comprehensive and consistent policy in which all the existing and future controls will receive the same basic program of inspection and maintenance and will insure the continued performance as originally designed. This plan does not address actions needed to handle accidental spills, rather it is for routine maintenance of the facilities. If a foreign material is noted and it is suspected to be hazardous, TxDOT employees will not handle, nor attempt to remove it, rather specialized contractors will be used.

The need for inspection and maintenance is as important as the design and construction of each device. The continued efficiency and performance of the original design of water quality controls is dependent upon a regular inspection of the device. This inspection will evaluate the need for any cleaning, repair, or correction that can be made to improve the operation of the facility.

BACKGROUND:

The controls used are Hazardous Material Traps (HMT), Sedimentation ponds, Filtration ponds and Detention basins. The HMT is a concrete box designed to contain fuel, liquid cargo, or hazardous materials spilled onto the roadway as the result of a collision or accident. Sedimentation ponds, detention ponds and filtration ponds are controls that basically slow and temporarily contain a specified volume of storm water. Sedimentation ponds allow for sediment suspended in the flow to settle out. Filtration ponds have filtering media through which water is passed. Detention basins are basically for decreasing the velocity of flow. All are intended to reduce the amount of solids that would otherwise be released down gradient, downstream, or allowed to directly enter the aquifer via the surface recharge water. These controls are required,

approved, and constructed under the auspices of the TNRCC.

The permanent water quality controls and the "Best Management Practices" have evolved over the last six years. The conceptual design of water quality controls, their size, the filtering process, and the construction materials are constantly changing. This is attributed to site-specific conditions, access restrictions, and design improvements. The newer and older facilities have different maintenance requirements, but the principal goal is to ensure their proper operation, within their original design parameters.

Despite the various designs, it is desirable to have a standardized list of maintenance actions that addresses all of the water quality controls. The advantage is the uniformity of the maintenance routine. It promotes a mutual understanding between TxDOT and TNRCC on what is expected for each location in all conditions. This Maintenance Plan is specific enough to address the performance of any particular location, yet broad enough to accommodate the variety of designs.

Presently, there are over twenty-five locations of permanent controls in the Austin area alone. The prospect of having this many different maintenance plans invites a confusing list of variables that would hinder a clear understanding of compliance as well as placing an undue burden on TxDOT maintenance personnel.

REGULAR MAINTENANCE POLICY AND INSPECTION PROCEDURES:

Hazardous Material Trap (HMT):
Check monthly. The valve shall be checked for proper operation and accumulated sediment and debris will be removed as necessary to ensure proper operation of the facility.

Sedimentation Ponds and Filtration Basins:
Clay bottom basins: Check monthly. Vegetation will be controlled to ensure proper operation.
Concrete lined basins: Check monthly.

If the inspection notes that trash or other unsightly debris is present, it must be removed.
If sedimentation has significantly reduced the capacity of the pond, that sediment, vegetation, and all other material will be removed. Records will be kept for each inspection and any remedial work performed.

POST-RAINFALL INSPECTIONS

In addition to monthly inspections, an inspection will occur on the first working day, or as soon as practical after any rainfall event that may impact the system.

MAINTENANCE CHECKLIST:

CHECKLIST FORM:

Name of inspector - _____. Date - _____.

Location - County____ Roadway_____ (Inventory Code Name/Number) _____.

Type of inspection (check one) - Weather (est. rainfall prior, 1", 2", 3"or >)._____
Scheduled visit___ Spill visit ____. Other visit_____.

Summary of
Inspection_____
_____

Actions Taken

_____
_____
_____
_____
_____
_____
_____
_____
_____
_____

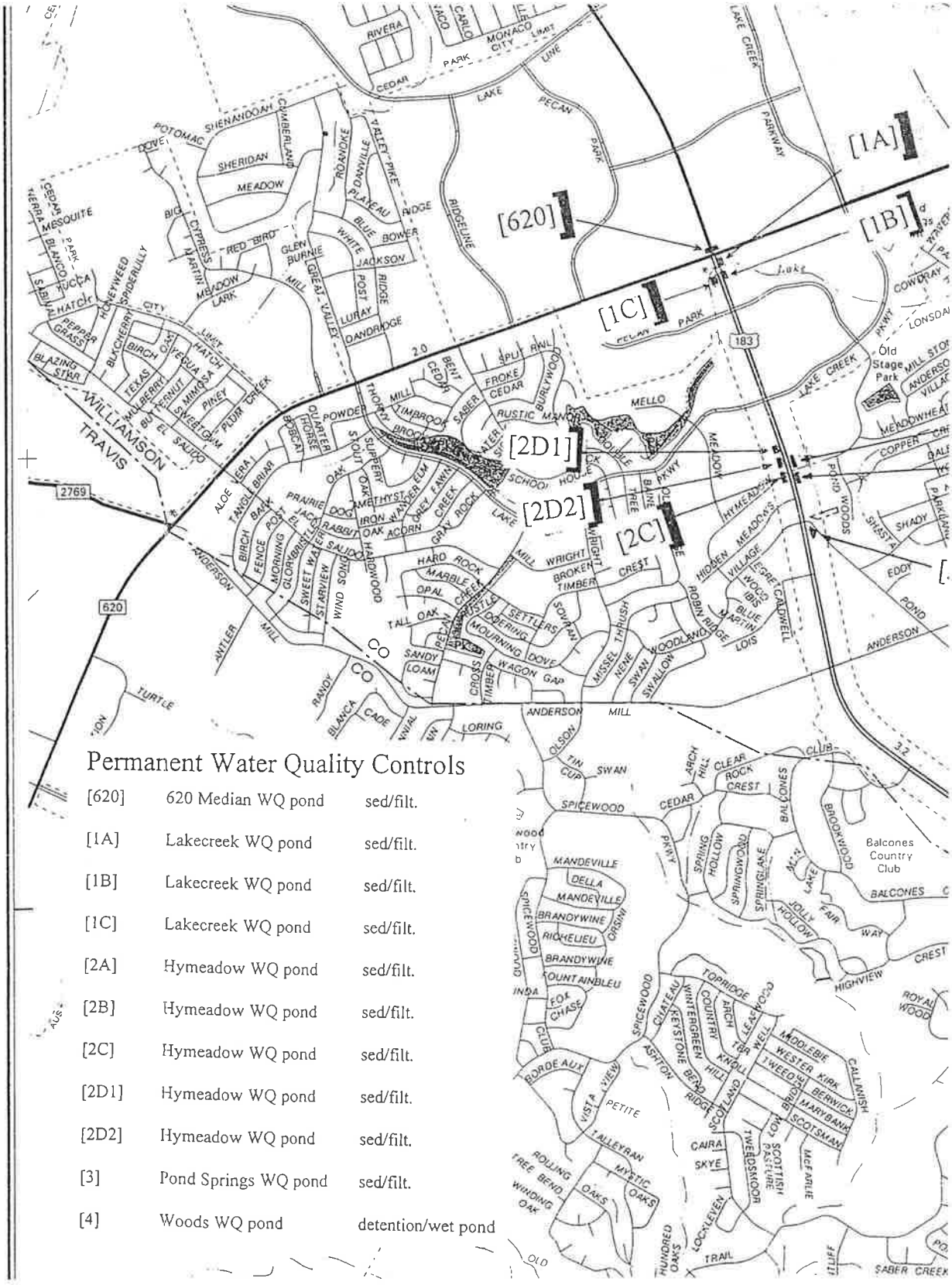

Permanent Water Quality Controls

[620]	620 Median WQ pond	sed/filt.
[1A]	Lakecreek WQ pond	sed/filt.
[1B]	Lakecreek WQ pond	sed/filt.
[1C]	Lakecreek WQ pond	sed/filt.
[2A]	Hymeadow WQ pond	sed/filt.
[2B]	Hymeadow WQ pond	sed/filt.
[2C]	Hymeadow WQ pond	sed/filt.
[2D1]	Hymeadow WQ pond	sed/filt.
[2D2]	Hymeadow WQ pond	sed/filt.
[3]	Pond Springs WQ pond	sed/filt.
[4]	Woods WQ pond	detention/wet pond

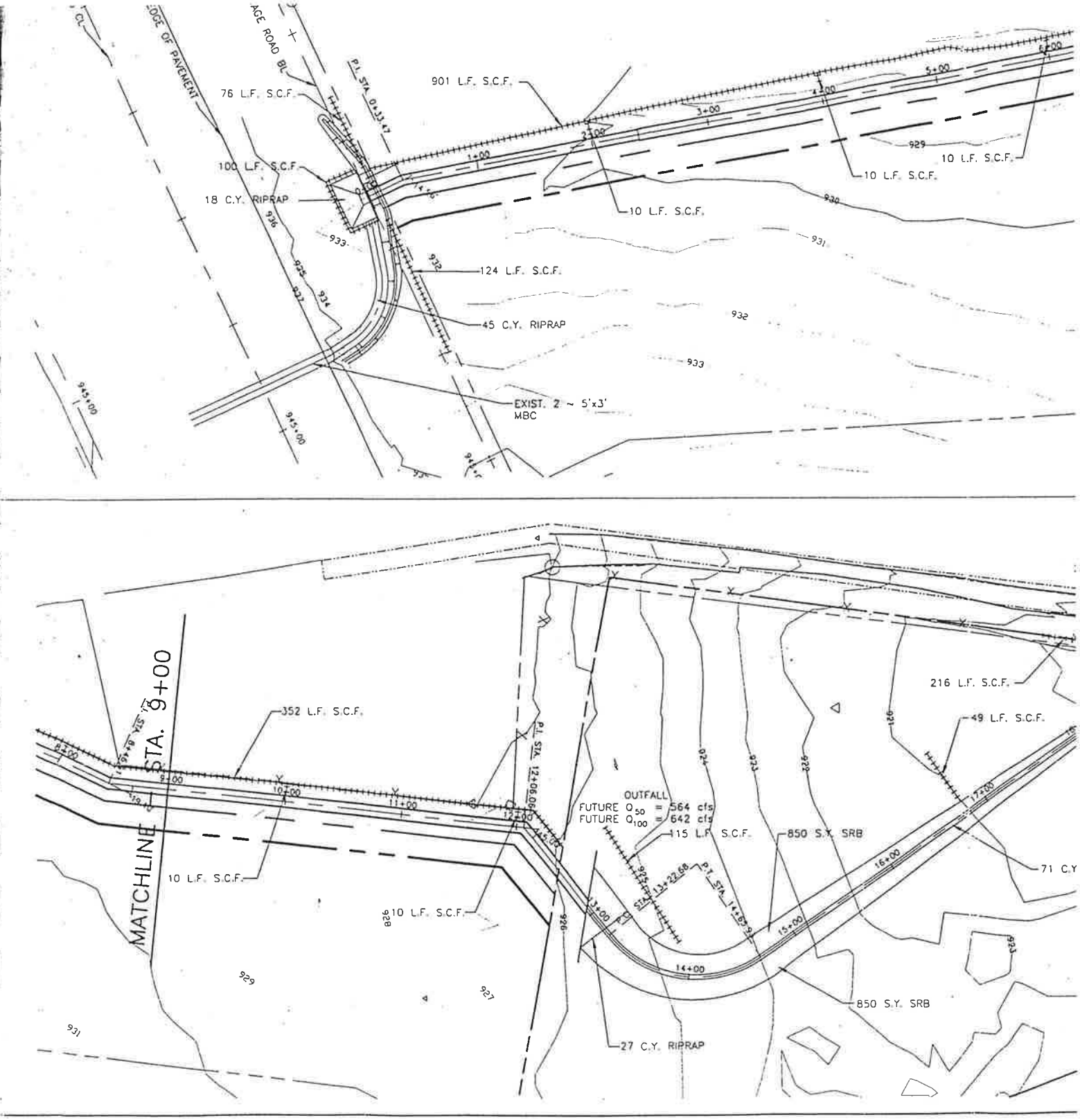
EDGE OF PAVEMENT
AGE ROAD BL
P.I. STA. 0+33.47
76 L.F. S.C.F.
901 L.F. S.C.F.
100 L.F. S.C.F.
18 C.Y. RIPRAP
10 L.F. S.C.F.
10 L.F. S.C.F.
10 L.F. S.C.F.
124 L.F. S.C.F.
45 C.Y. RIPRAP
EXIST. 2 ~ 5'x3' MBC
MATCHLINE STA. 9+00
352 L.F. S.C.F.
P.I. STA. 12+06.09
OUTFALL
FUTURE Q50 = 564 cfs
FUTURE Q100 = 642 cfs
115 L.F. S.C.F.
850 S.Y. SRB
216 L.F. S.C.F.
49 L.F. S.C.F.
71 C.Y
10 L.F. S.C.F.
10 L.F. S.C.F.
850 S.Y. SRB
27 C.Y. RIPRAP

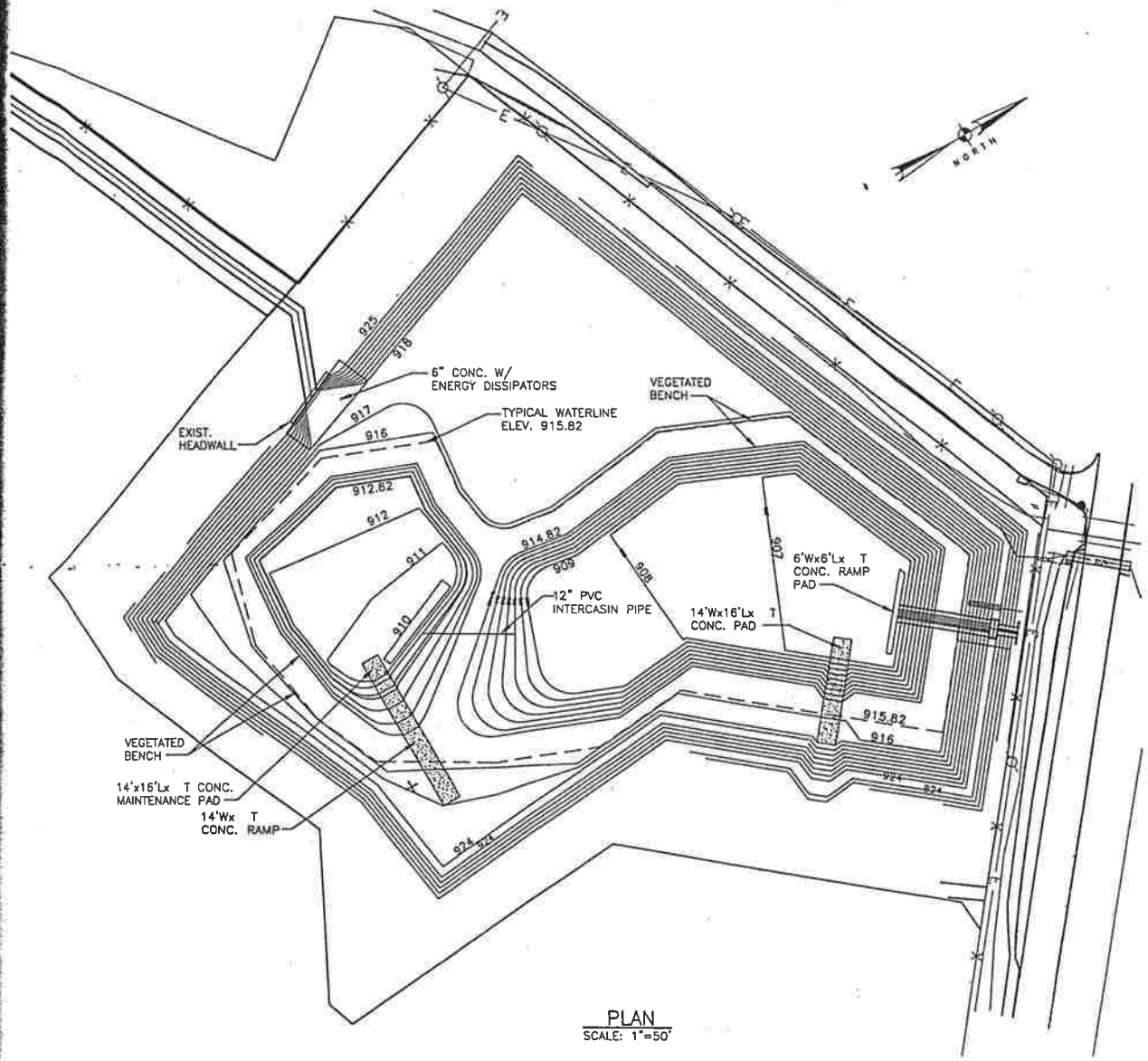

PLAN
SCALE: 1"=50'

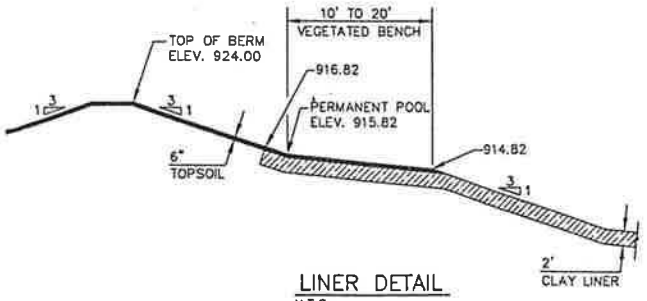

LINER DETAIL
N.T.S.

AREA TREA

NOT FOR CONS

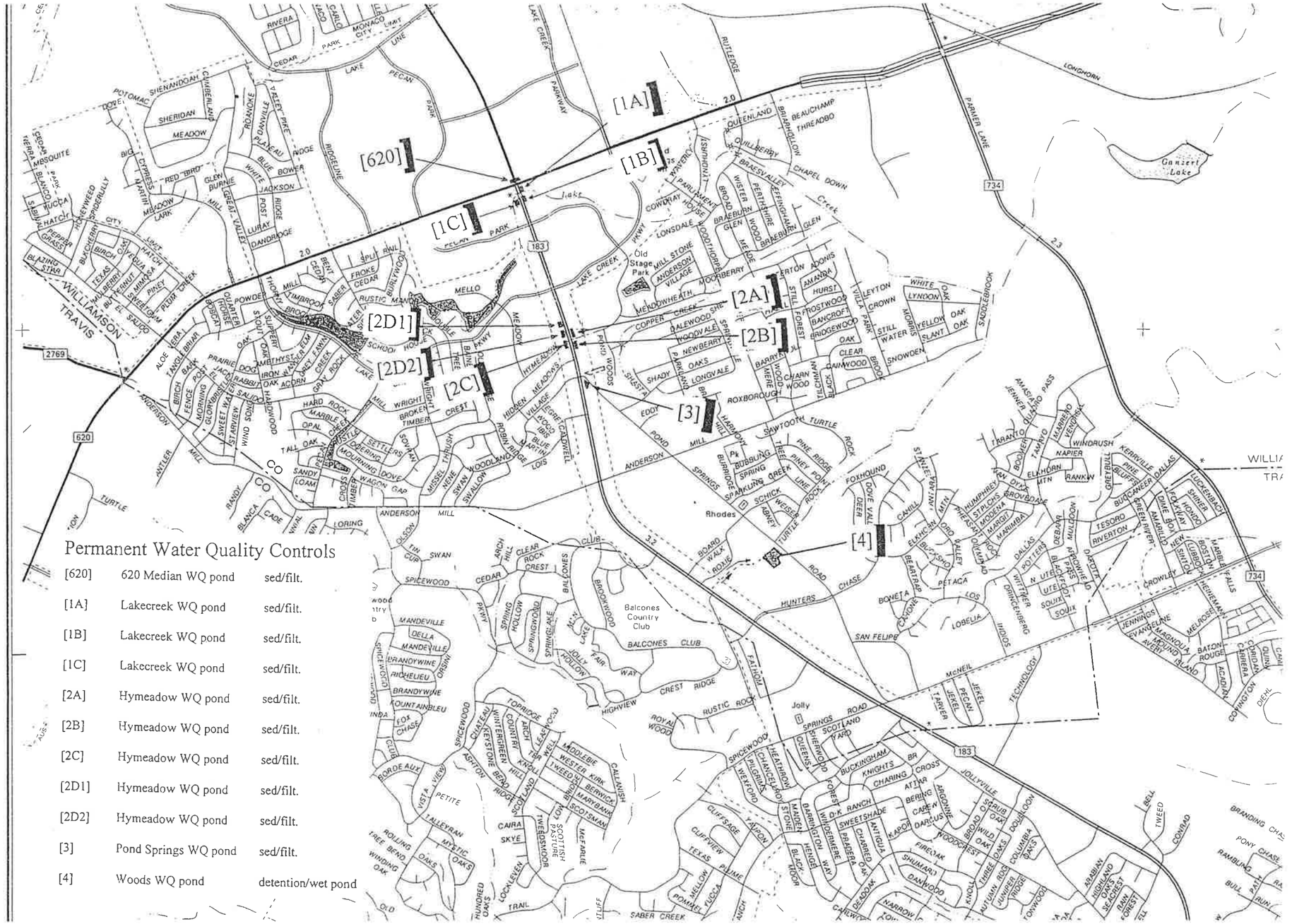

Permanent Water Quality Controls

[620]	620 Median WQ pond	sed/filt.
[1A]	Lakecreek WQ pond	sed/filt.
[1B]	Lakecreek WQ pond	sed/filt.
[1C]	Lakecreek WQ pond	sed/filt.
[2A]	Hymeadow WQ pond	sed/filt.
[2B]	Hymeadow WQ pond	sed/filt.
[2C]	Hymeadow WQ pond	sed/filt.
[2D1]	Hymeadow WQ pond	sed/filt.
[2D2]	Hymeadow WQ pond	sed/filt.
[3]	Pond Springs WQ pond	sed/filt.
[4]	Woods WQ pond	detention/wet pond

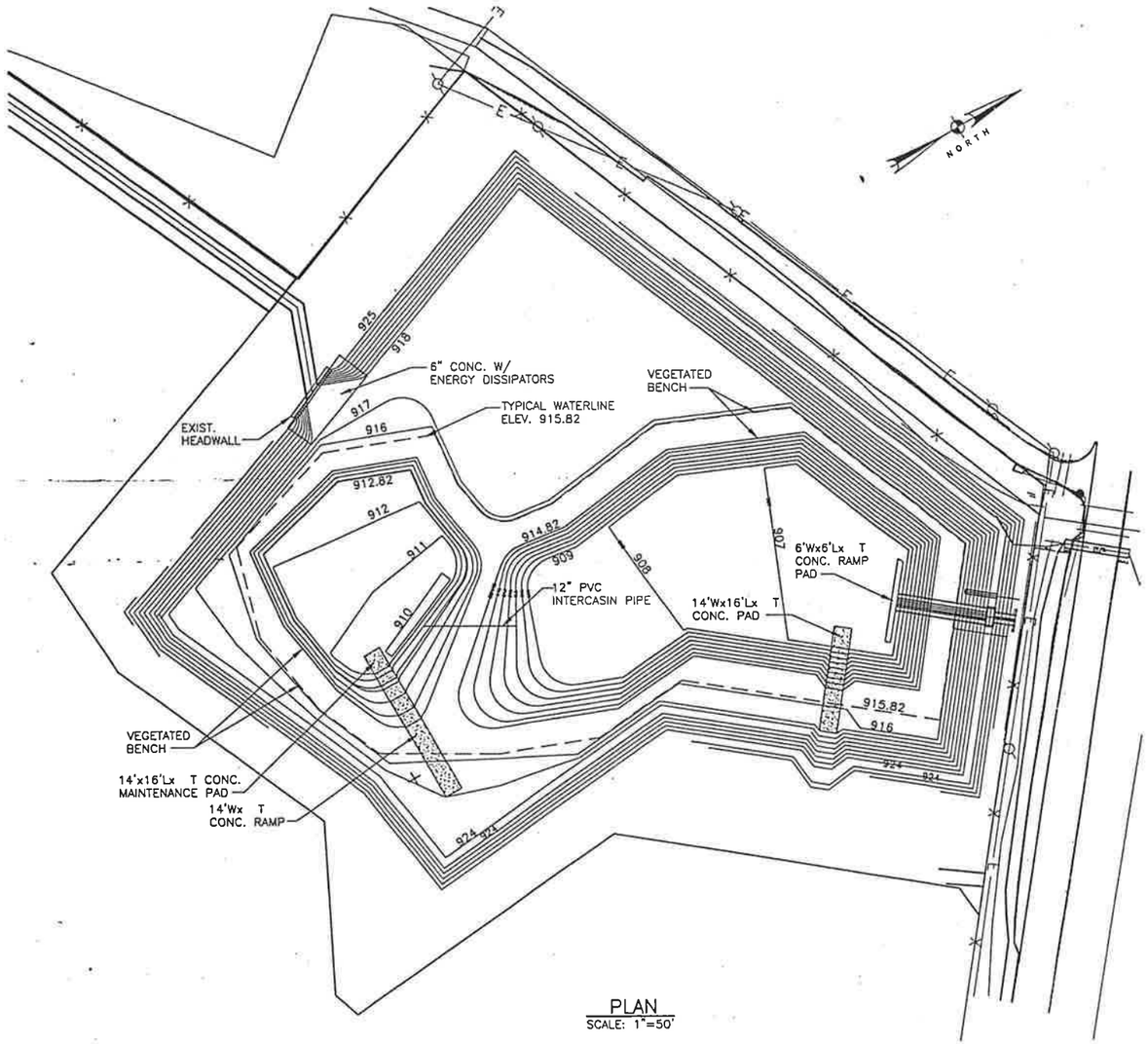

PLAN
SCALE: 1"=50'

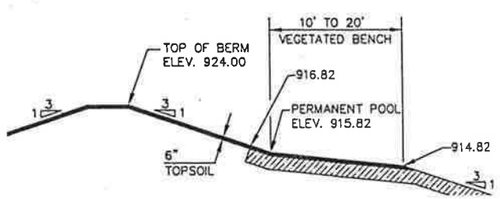

AREA TREATED = 102.17 ACRES

STATE OF TEXAS
C. D. BILLS
83877
LICENSED
PROFESSIONAL ENGINEER

Turner Collie & Braden Inc.
ENGINEERS • PLANNERS • PROJECT MANAGERS

AUSTIN | 72-07401-022

Texas Department of Transportation

WOODS POND
WATER QUALITY AND



ROCK FILTER DAM (R.F.D.)

QUANTITIES

ITEM#	DESCRIPTION	AMOUNT
5005	ROCK FILTER DAM (TYPE 2)	70 L.F.
5005	ROCK FILTER DAM (REMOVE)(TYPE 2)	70 L.F.
5010	STABILIZED CONST. EXIT (TYPE 1)	83 S.Y.
5010	STABILIZED CONST. EXIT (REMOVE)(TYPE 1)	83 S.Y.
160	FURNISH & PLACE TOPSOIL (CL 2)(4 IN.)	7509 SY.
164	SEED FOR EROSION CONTROL (TYPE _)	7509 SY.
164	DRILL SEED (PERM.)(URBAN)(CLAY)	7509 SY.
168	VEGETATIVE WATERING	307 MG
169	SOIL RETENTION BLANKET (CL1)(TYPE A)	1856 SY.
432	RIPRAP (CONC.)(CLB)	161 C.Y.
5012	EARTHWORK (EROSION CONTROL) (CLASS 2)	111 CY.
5012	BACKHOE WORK (EROSION CONTROL) (CLASS 1)	20 HR.
5012	EXCAVATOR (EROSION CONTROL) (CLASS 1)	20 HR.
5012	BLADING (EROSION CONTROL) (CLASS 1)	20 HR.
	TEMPORARY SEDIMENT CONTROL FENCE	1893 L.F.
	TEMPORARY SEDIMENT CONTROL FENCE (REMOVE AND REPLACE)	100 L.F.
	TEMPORARY SEDIMENT CONTROL FENCE (REMOVE)	1893 L.F.

STATE OF TEXAS
DAVID L. GARRETT
76626
REGISTERED PROFESSIONAL ENGINEER
7/15/98

Turner Collie & Braden Inc.
ENGINEERS • PLANNERS • PROJECT MANAGERS

AUSTIN | 72-07401-022

Texas Department of Transportation

US 183 – WOODS OUTFALL
EROSION/SEDIMENTATION CONTROL PLAN

SCALE: 1"=100' | SHEET – OF –

KKY		STATE	FEDERAL AID PROJECT NO.	
CDB	6	TEXAS	F257(16)	U.S.183
KKY/GS	STATE DIST. NO.	COUNTY		
CDB/DLG	14	WILLIAMSON		1

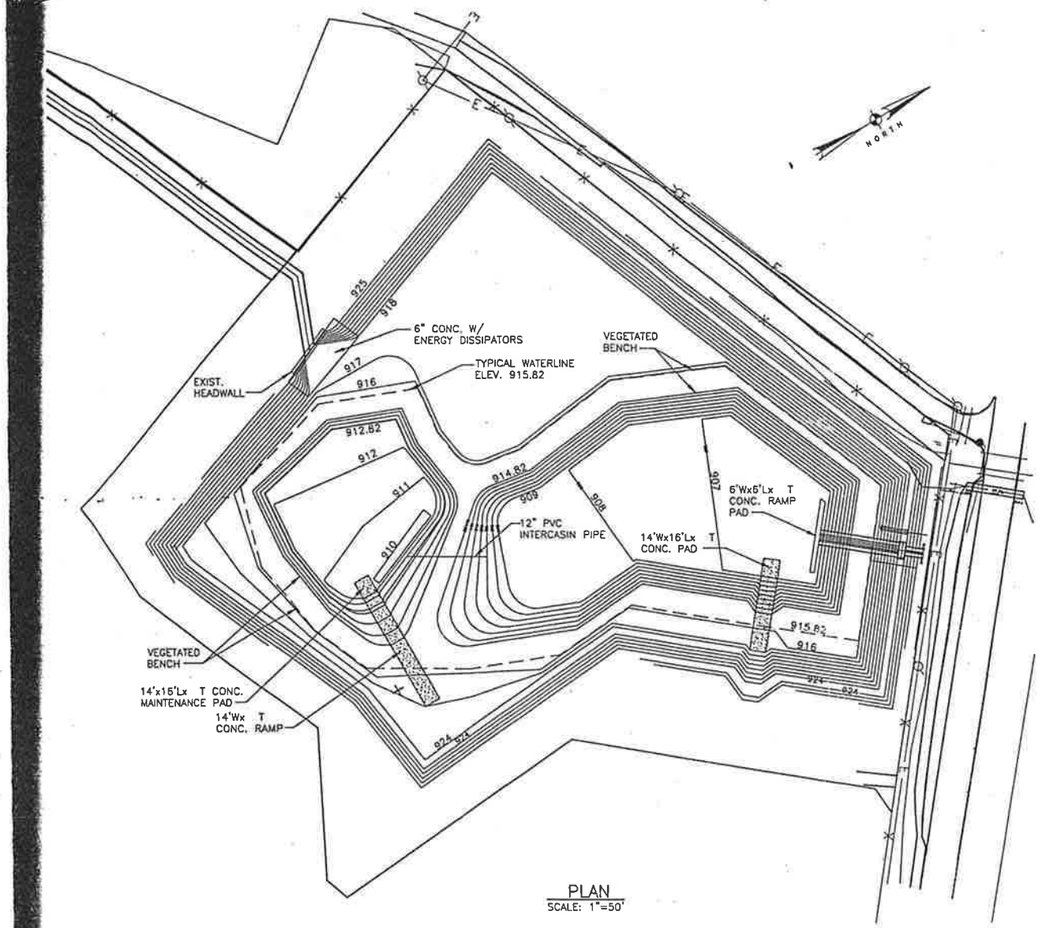

PLAN
SCALE: 1"=50'

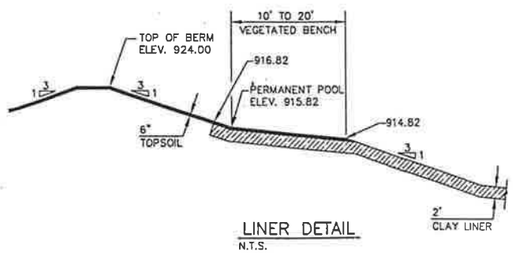

LINER DETAIL
N.T.S.

AREA TREATED = 102.17 ACRES

STATE OF TEXAS
C. D. BILLS
83877
LICENSED
PROFESSIONAL ENGINEER

C. D. Bills
9/10/98

NOT FOR CONSTRUCTION

Turner Collie & Braden Inc.
ENGINEERS • PLANNERS • PROJECT MANAGERS

AUSTIN | 72-07401-022

Texas Department of Transportation

WOODS POND
WATER QUALITY AND
DETENTION POND
PLAN AND DETAILS

CDB		STATE	FEDERAL AID PROJECT NO.			
DLG	6	TEXAS	F257(16)			U.S.183
CWS	STATE DIST. NO.	COUNTY				
DLG	AUS	WILLIAMSON	0151	05	038	-

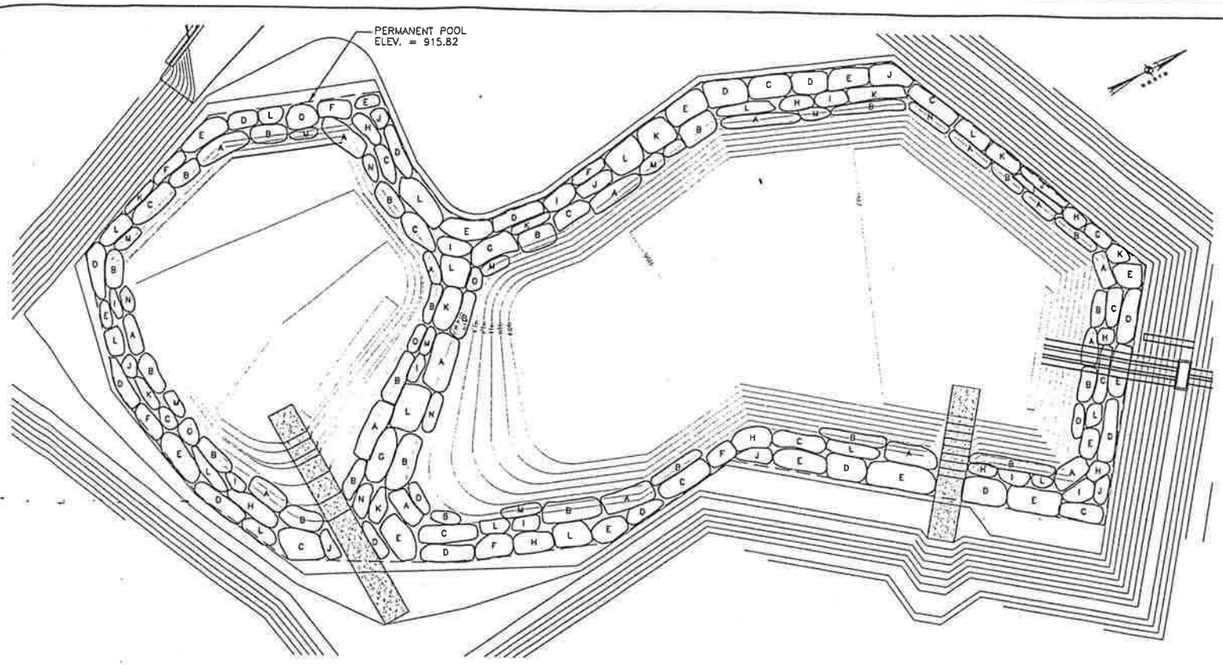

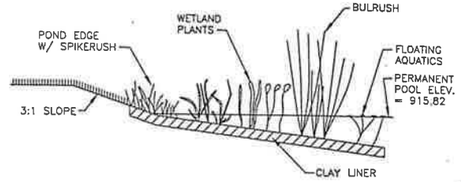

CROSS SECTION OF A TYPICAL VEGETATED BENCH AREA
N.T.S.

MINIMUM REQUIREMENTS FOR WET POND LANDSCAPING
SCALE: 1"=30'

MINIMUM REQUIREMENTS FOR WET POND LANDSCAPING

ALL WET POND PLANTS SHALL BE PROPAGATED OR HARVESTED FROM REGIONALLY ADAPTED STOCK WHEN FEASIBLE. THESE ARE PLANT SPECIES OR GENOTYPES WHICH ARE NATIVE TO A RANGE OF WITHIN 250 MILES OF THE PROJECT SITE. WET POND PLANTS SHALL BE INSTALLED AT WATER DEPTHS APPROPIATE FOR THE SPECIES.

WET POND SURFACE AREA = 106,339 SF

MINIMUM PLANT QUANITY = (106,339)(0.03) = 3190

PLANT CATEGORY	RATIO	MIN. REQ'D	MIN. SIZE	BARE ROOT
BULRUSH	40%	1276	2 GALLON	1 BARE ROOT
SPIKERUSH	20%	638	2.5" LINERS	1 BARE ROOT
MARSH DIVERSITY	20%	638	1 GALLON	1 BARE ROOT
ARROWHEAD	10%	319	1 GALLON	1 BARE ROOT
AQUATICS	10%	319	1 GALLON	1 BARE ROOT
PLANTS PROVIDED		3190		

PLANTS PROVIDED

SYMBOL	COMMON NAME	SCIENTIFIC NAME	QUANTITY
A	BULRUSH	SCIRPUS VALIDUS	500
B	BULRUSH	SCIRPUS CALIFORNICUS	530
C	THREE-SQUARE BULRUSH	SCIRPUS AMERICANUS	265
D	SPIKERUSH	ELEOCHARIS MONTEVIDENSIS	320
E	SPIKERUSH	ELEOCHARIS QUADRANGULATA	320
F	FLATSEDGE	CYPERUS OCHRAEUS	90
G	YELLOW FLAG IRIS	IRIS PSEUDACORUS	60
H	SOFT RUSH	JUNCUS EFFUSUS	150
I	WATER WILLOW	JUSTICIA AMERICANA	140
J	WATER CLOVER	MARSILEA MACROPODA	130
K	PICKERELWEED	PONTEDERIA CORDATA L. PICKERELWEED	160
L	ARROWHEAD	SAGGITARIA LATIFOLIA	330
M	COONTAIL	CERATOPHYLLUM spp. COON-TAIL	110
N	FANWORT	NYMPHAEA ORDORATA	110
O	SAGO PONDWEED	POTOMAGETON PECTINATUS	110
			3325

NOT FOR CONSTRUCTION

STATE OF TEXAS
C. D. BILLS
83877
LICENSED
PROFESSIONAL ENGINEER

C.D. Bills
9/10/98

Turner Collie & Braden Inc.
ENGINEERS • PLANNERS • PROJECT MANAGERS

AUSTIN | 72-07401-022

Texas Department of Transportation

WOODS POND
WETLAND PLANTING PLAN

CDB		STATE	FEDERAL AID PROJECT NO.			
DLC	6	TEXAS	F257(16)			U.S.183
CWS	STATE DIST. NO.	COUNTY				
DLC	AUS	WILLIAMSON	0151	05	038	-

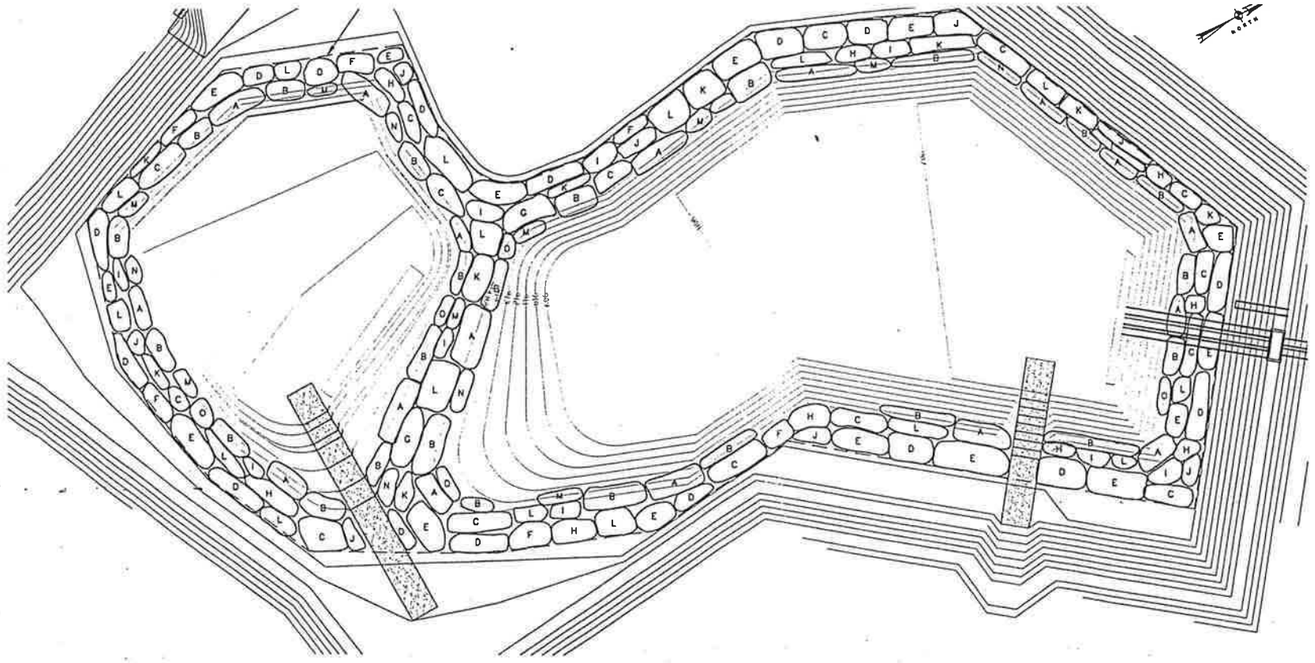

MINIMUM REQUIREMENTS FOR WET POND LANDSCAPING
SCALE: 1"=30'

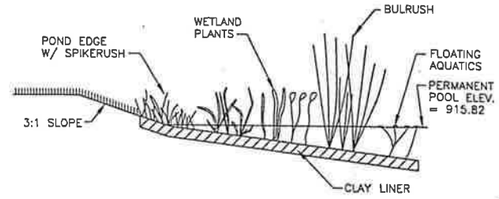

CROSS SECTION OF A TYPICAL VEGETATED BENCH AREA
N.T.S.

MINIMUM REQUIREMENTS FOR WET POND LANDSCAPING

ALL WET POND PLANTS SHALL BE PROPAGATED OR HARVESTED FROM REGIONALLY ADAPTED STOCK WHEN FEASIBLE. THESE ARE PLANT SPECIES OR GENOTYPES WHICH ARE NATIVE TO A RANGE OF WITHIN 250 MILES OF THE PROJECT SITE. WET POND PLANTS SHALL BE INSTALLED AT WATER DEPTHS APPROPIATE FOR THE SPECIES.

WET POND SURFACE AREA = 106,339 SF

MINIMUM PLANT QUANITY = (106,339)(0.03) = 3190

PLANT CATEGORY	RATIO	MIN. REQ'D	MIN. SIZE	BARE ROOT
BULRUSH	40%	1276	2 GALLON	1 BARE ROOT
SPIKERUSH	20%	638	2.8" LINERS	1 BARE ROOT
MARSH DIVERSITY	20%	638	1 GALLON	1 BARE ROOT
ARROWHEAD	10%	319	1 GALLON	1 BARE ROOT
AQUATICS	10%	319	1 GALLON	1 BARE ROOT
PLANTS PROVIDED		3190		

PLANTS PROVIDED

SYMBOL	COMMON NAME	SCIENTIFIC NAME	QUANTITY
A	BULRUSH	SCIRPUS VALIDUS	500
B	BULRUSH	SCIRPUS CALIFORNICUS	530
C	THREE-SQUARE BULRUSH	SCIRPUS AMERICANUS	265
D	SPIKERUSH	ELEOCHARIS MONTEVIDENSIS	320
E	SPIKERUSH	ELEOCHARIS QUADRANGULATA	320
F	FLATSEDGE	CYPERUS OCHRAEUS	90
G	YELLOW FLAG IRIS	IRIS PSEUDACORUS	60
H	SOFT RUSH	JUNCUS EFFUSUS	150
I	WATER WILLOW	JUSTICIA AMERICANA	140
J	WATER CLOVER	MARSILEA MACROPODA	130
K	PICKERELWEED	PONTEDERIA CORDATA L. PICKERELWEED	160
L	ARROWHEAD	SAGGITARIA LATIFOLIA	330
M	COONTAIL	CERATOPHYLLUM spp. COON-TAIL	110
N	FANWORT	NYMPHAEA ORDORATA	110
O	SAGO PONDWEED	POTOMAGETON PECTINATUS	110
			3325

NOT FOR CONSTRUCTION

STATE OF TEXAS
C. D. BILLS
83877
LICENSED
PROFESSIONAL ENGINEER
9/10/98

Turner Collie & Braden Inc.
ENGINEERS • PLANNERS • PROJECT MANAGERS

AUSTIN | 72-07401-022

Texas Department of Transportation

WOODS POND
WETLAND PLANTING PLAN

CDB		STATE	FEDERAL AID PROJECT NO.				
DLG	6	TEXAS	F257(16)				U.S.183
CWS	STATE DIST. NO.	COUNTY	CONTROL NO.	SECTION NO.	JOB NO.		SHEET NO.
DLG	AUS	WILLIAMSON	0151	05	038		-

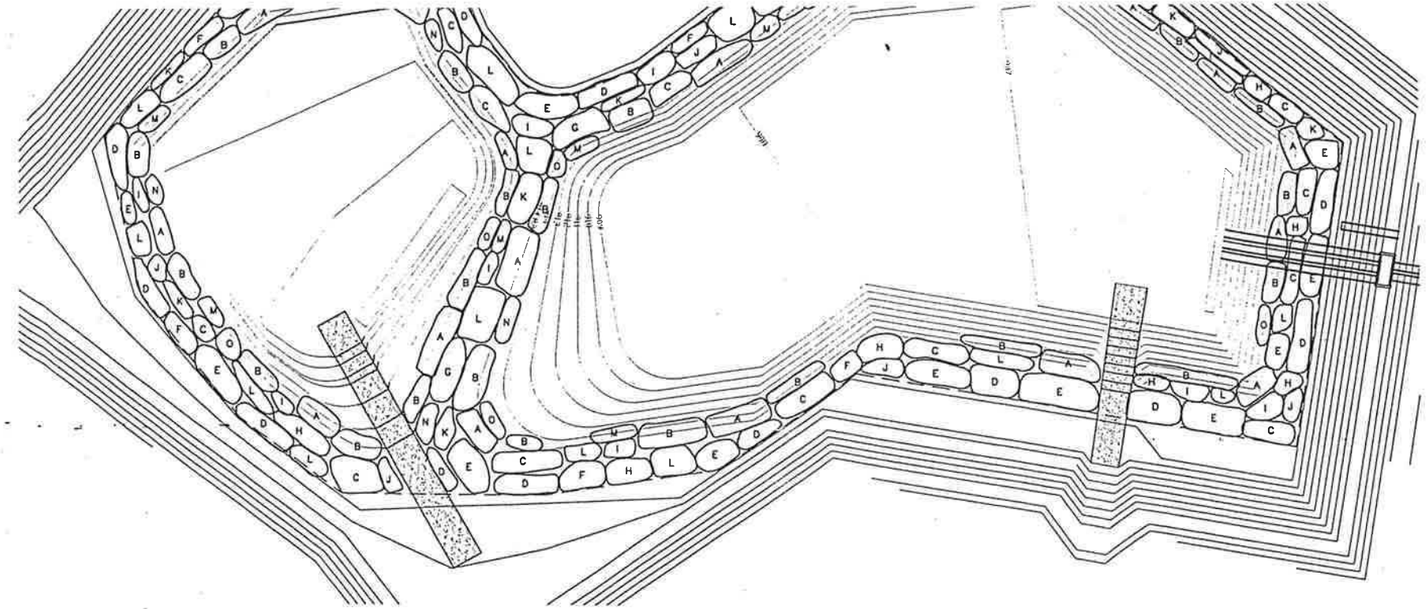

MINIMUM REQUIREMENTS FOR WET POND LANDSCAPING
SCALE: 1"=30'

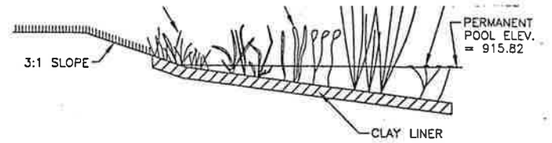

CROSS SECTION OF A TYPICAL VEGETATED BENCH AREA
N.T.S.

MINIMUM REQUIREMENTS FOR WET POND LANDSCAPING

ALL WET POND PLANTS SHALL BE PROPAGATED OR HARVESTED FROM REGIONALLY ADAPTED STOCK WHEN FEASIBLE. THESE ARE PLANT SPECIES OR GENOTYPES WHICH ARE NATIVE TO A RANGE OF WITHIN 250 MILES OF THE PROJECT SITE. WET POND PLANTS SHALL BE INSTALLED AT WATER DEPTHS APPROPIATE FOR THE SPECIES.

WET POND SURFACE AREA = 106,339 SF

MINIMUM PLANT QUANITY = (106,339)(0.03) = 3190

PLANT CATEGORY	RATIO	MIN. REQ'D	MIN. SIZE	BARE ROOT
BULRUSH	40%	1276	2 GALLON	1 BARE ROOT
SPIKERUSH	20%	638	2.5" LINERS	1 BARE ROOT
MARSH DIVERSITY	20%	638	1 GALLON	1 BARE ROOT
ARROWHEAD	10%	319	1 GALLON	1 BARE ROOT
AQUATICS	10%	319	1 GALLON	1 BARE ROOT
PLANTS PROVIDED		3190		

PLANTS PROVIDED

SYMBOL	COMMON NAME	SCIENTIFIC NAME	QUANTITY
A	BULRUSH	SCIRPUS VALIDUS	500
B	BULRUSH	SCIRPUS CALIFORNICUS	530
C	THREE-SQUARE BULRUSH	SCIRPUS AMERICANUS	265
D	SPIKERUSH	ELEOCHARIS MONTEVIDENSIS	320
E	SPIKERUSH	ELEOCHARIS QUADRANGULATA	320
F	FLATSEDGE	CYPERUS OCHRAEUS	90
G	YELLOW FLAG IRIS	IRIS PSEUDACORUS	60
H	SOFT RUSH	JUNCUS EFFUSUS	150
I	WATER WILLOW	JUSTICIA AMERICANA	140
J	WATER CLOVER	MARSILEA MACROPODA	130
K	PICKERELWEED	PONTEDERIA CORDATA L. PICKERELWEED	160
L	ARROWHEAD	SAGGITARIA LATIFOLIA	330
M	COONTAIL	CERATOPHYLLUM spp. COON-TAIL	110
N	FANWORT	NYMPHAEA ORDORATA	110
O	SAGO PONDWEED	POTOMAGETON PECTINATUS	110
			3325

NOT FOR CONSTRUCTION

STATE OF TEXAS
C. D. BILLS
83877
LICENSED
PROFESSIONAL ENGINEER
9/10/98

Turner Collie & Braden Inc.
ENGINEERS • PLANNERS • PROJECT MANAGERS

AUSTIN | 72-07401-022

Texas Department of Transportation

WOODS POND
WETLAND PLANTING PLAN

Designed	CDB	FED. RD. DIV. NO.	STATE	FEDERAL AID PROJECT NO.			SHEET NO.
Drawn	DLG	6	TEXAS	F257(16)			U.S.183
Checked	DWS	STATE DIST. NO.	COUNTY	CONTROL NO.	SECTION NO.	JOB NO.	SHEET NO.
Quantities	DLG	AUS	WILLIAMSON	0151	05	038	-

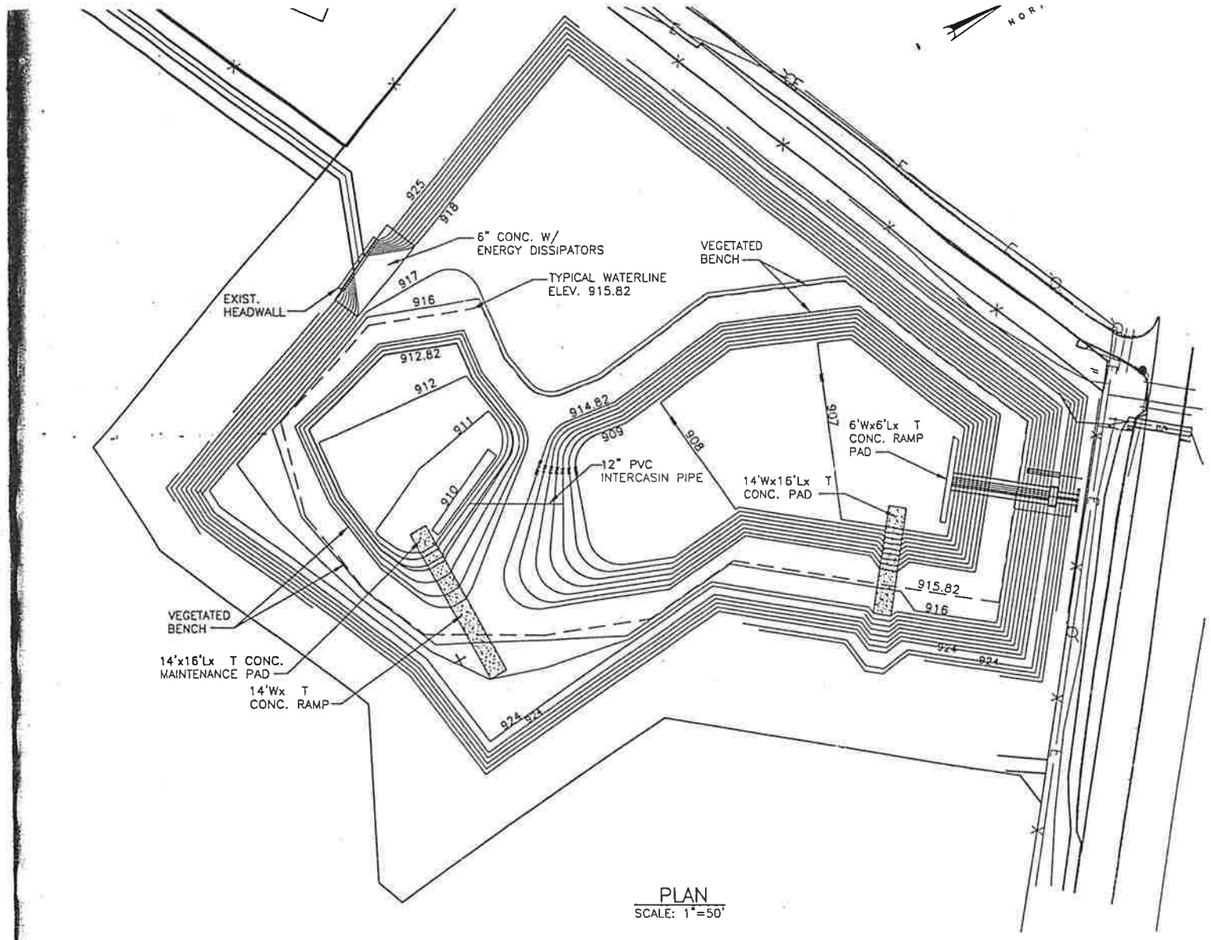

PLAN
SCALE: 1"=50'

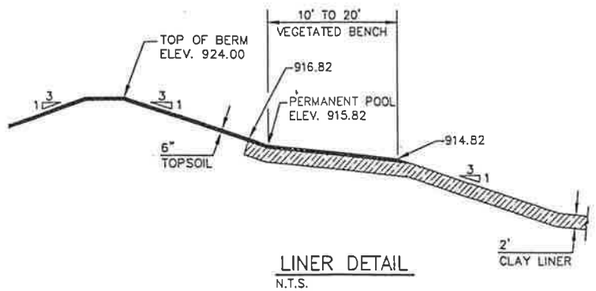

LINER DETAIL
N.T.S.

AREA TREATED = 102.17 ACRES

STATE OF TEXAS
C. D. BILLS
83877
LICENSED
PROFESSIONAL ENGINEER
9/10/98

NOT FOR CONSTRUCTION

Turner Collie & Braden Inc.
ENGINEERS • PLANNERS • PROJECT MANAGERS

AUSTIN | 72-07401-022

Texas Department of Transportation

WOODS POND
WATER QUALITY AND
DETENTION POND
PLAN AND DETAILS

Designed	CDB		STATE	FEDERAL AID PROJECT NO.			SHEET NO.
Detailed	DLG	8	TEXAS	F257(16)			U.S.183
Checked	GWS	STATE DIST. NO.	COUNTY	CONTROL NO.	SECTION NO.	JOB NO.	DIST. NO.
Revised	DLG	AUS	WILLIAMSON	0151	05	035	-

Turner Collie & Braden Inc.
Engineers • Planners • Project Managers

COMPUTATION SHEET

SUBJECT US 183 Sect 1 Update
WOODS TRACT POND
JOB NO. ____ SHEET NO. 1 OF 1
BY CDB DATE 5/28/98
CHKD BY ____ DATE ____

ORIGINAL CALCS

Wet Pond

$V = 0.162 * R_f * DA$

Table 1.9 pg 1-202 COA ENV'L Manual
- I.W/ 63.05% Impervious Cover, Recharge
R_f = 0.401 to .453

$\frac{.453 - .405}{.05} = \frac{.453 - x}{0.0195}$ · $x = 0.434$

according to COA Environmental Manual
p. 1-169 – 1' C.I. can leave out WOODS property in WQ calcs because. WOODS will treat it

PERM POOL VOL.

$V = (0.162)(.434)(102.17) = 7.185$ ac-ft 312,908.78 CF

Permanent Pool 2 compartments
Sediment forebay
Main Pool

SEDIMENT FOREBAY – 15% - 25% of permanent vol.
- 14'-6" deep
- vegetative benches (entire Perm Pool will have this)
- min 2% slope towards a low point
- reinforced conc. pad – 12' by 16'
- 12' conc. maintenance Ramp 4:1 leave at least 12" above perm pool elev to maintenance pad

use 0.20% as starting point
(0.20)(7.183) = 1.4366 ≈ 1.437 ac-ft

Turner Collie & Braden Inc.
Engineers • Planners • Project Managers

COMPUTATION SHEET

SUBJECT US 183 Sect 1 Update - Woods Tract Pond
JOB NO. _____ SHEET NO. 2 OF _____
BY CDB DATE 5/28/98
CHKD BY _____ DATE _____

consider vegetative bench 20% of the total pond area
min 10' wide
S = 5 to 15%
max inundation of 18"

if use 1.5'



want 20' wide

$\frac{1.5'}{20'}$ = 7.5% slope

use min 5% slope

(20)(.05) = 1'

SEE A TYPICAL X-SECTION OF POND page 3

FOR CONTOURING:
end of pond - detention elev

264

916 - (.30% * 60) = 915.82

915.82 - (5% * 20') = 914.82

even contours
915 - 914.82 = .18
× 20
3.6'

5% = 20:1

Main Pool vol = 7.183 − 1.437 = 5.746 acft - includes veg. bench

Turner Collie & Braden Inc.
Engineers • Planners • Project Managers

COMPUTATION SHEET

SUBJECT _____

JOB NO. _____ SHEET NO. 3 OF _____

BY _____ DATE 5/28/99

CHKD BY _____ DATE _____

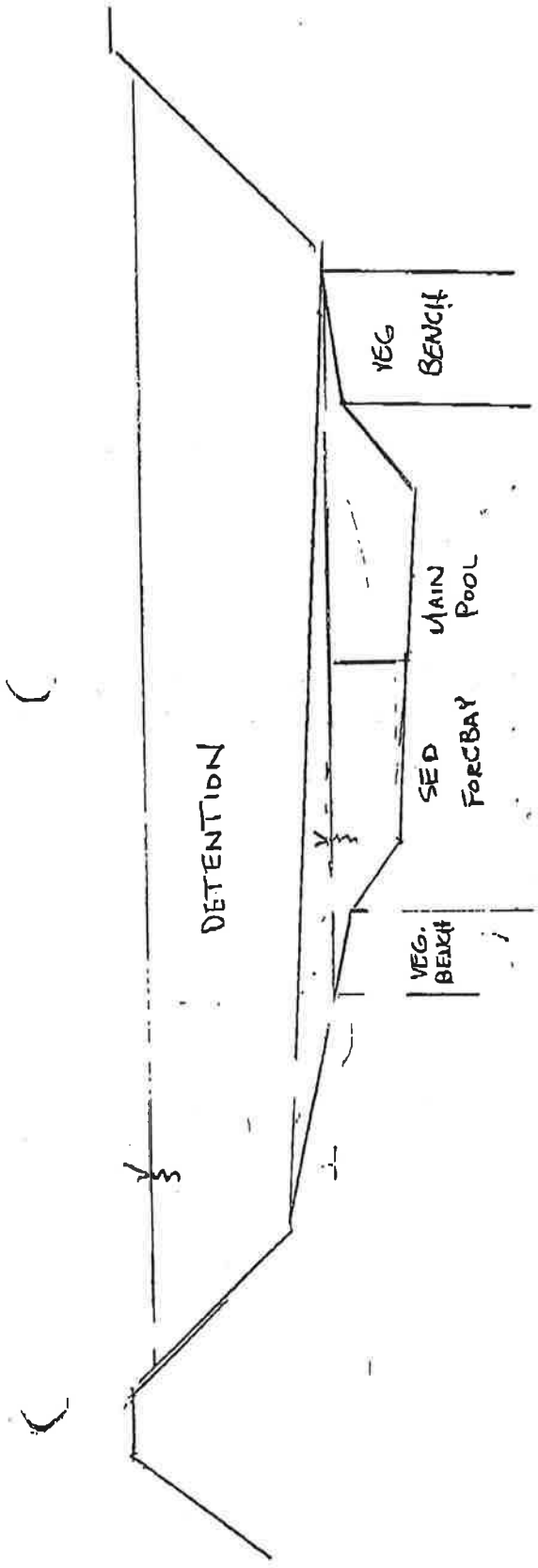

Turner Collie & Braden Inc.
Engineers • Planners • Project Managers

COMPUTATION SHEET

SUBJECT _____

JOB NO. _____ SHEET NO. 4 OF _____

BY _____ DATE 5/20/98

CHKD BY _____ DATE _____

Rough Est

Main Pool L≅ 277

So will drop 277 * .01 = 2.77' over length

don't want deeper than 8'

if start w/ 5' depth

5 to 7.65'

914.82

SEDIMENT FOREBAY

L= ?

1.437 ac-ft

5' avg depth

0.2874 ac = 12,519 SF

if L = 120'

W = 104.325'

Outfall @ elev - 917.77

Slope @ 0.30% for 20'

917.77 - (20.* .30%) = 917.71

If use 20:1 917.71 - 914.82 = 2.89 = 57.8 ft

too long

Want flow to spread out.

use Slope @ 0.30% for 30' 917.77 - (30 * .30%) = 917.68

Slope 3:1 to 915.82 — 917.68 - 915.82 = 1.86

Turner Collie & Braden Inc.
Engineers • Planners • Project Managers

COMPUTATION SHEET

SUBJECT _____

JOB NO. _____ SHEET NO. 5 OF _____

BY _____ DATE 9/28/98

CHKD BY _____ DATE _____

SED FOREBAY CONT

3:1 slope to 2'-3'

if L = 120

120 x .02 = 2.4' drop

begin w/ 3.32' 914.82 to 911.5. 3.32 x 3 = 9.96

want to put a slight curve in pond to make it more natural looking

& culvert 338.8138

Pond 19.8569

2% slope all directions

down E of pond 911.5 - (120 x .02) = 909.1

need to have center steeper than 2%

need E = 908.8

$$\frac{911.5 - 908.8}{120} = 2.25\%$$

$$\frac{0.5}{2.25\%} = 22.22$$

$$\frac{1}{.0225} = 44.44$$

Turner Collie & Braden Inc.
Engineers • Planners • Project Managers

COMPUTATION SHEET

SUBJECT _____

JOB NO. _____ SHEET NO. 6 OF _____

BY _____ DATE 5/28/98

CHKD BY _____ DATE _____

45'

Reuse Sed. Forbay

use S = 0.30% for 15' - (Energy dissipators ect.)

918 - 917.77 = 0.23

3(.23) = 0.69

917.77 - (15 * .30%) = 917.73'

3:1 slope to veg. bench

917.73 - 915.82 = 1.91

1.91 * 3 = 5.73

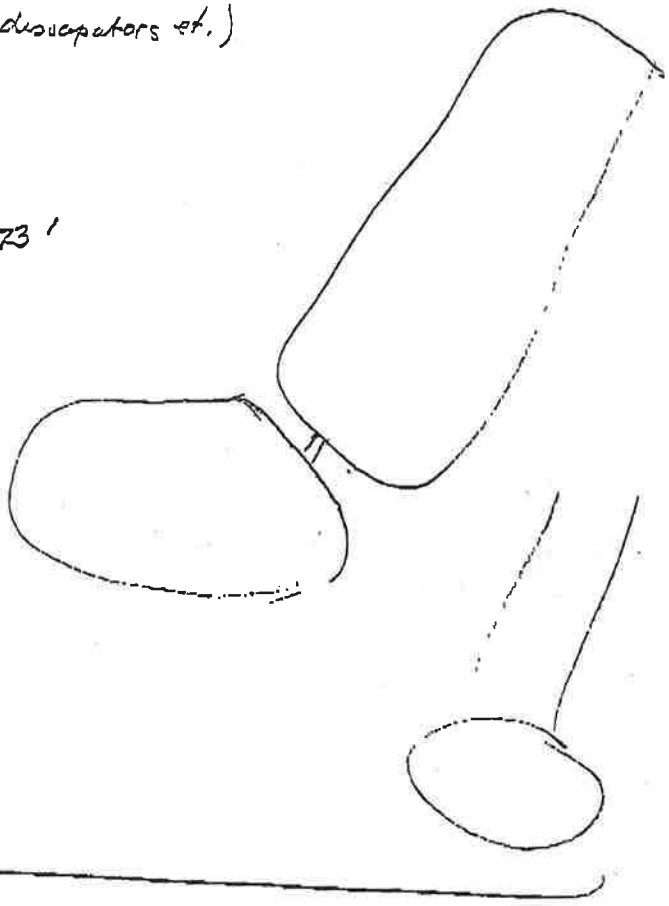

6/2/98

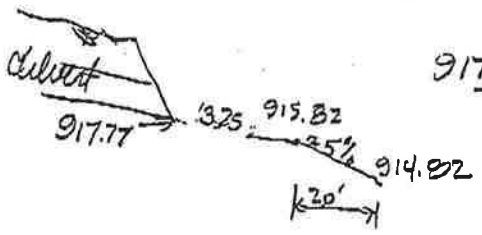

$\frac{917.77 - 915.82}{60} = 3.25\%$ 30.77 : 1

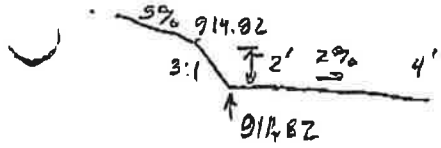

$\frac{911.82 - 911}{x} = .02$ $x = 41$

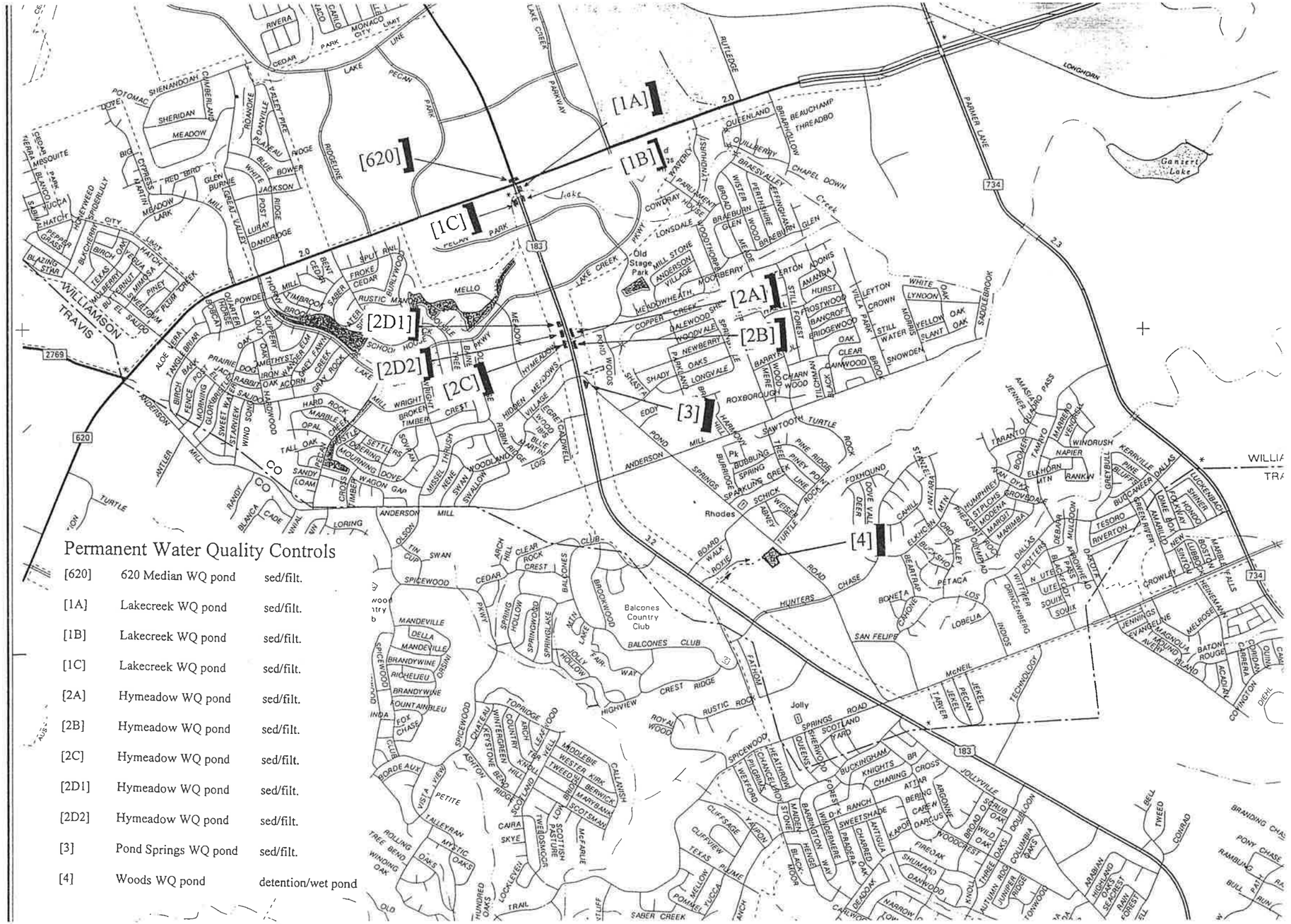
[620]
[1A]
[1B]
[1C]
[2A]
[2B]
[2C]
[2D1]
[2D2]
[3]
[4]
WILLIAMSON
TRAVIS
Lake Creek
Lake Creek Parkway
Ridgeline
Lake Pecan Park
Rutledge
Parmer Lane
Longhorn
Gaisert Lake
Creek
Old Stage Park
Balcones Country Club
Rhodes
Jolly
Springs
Road
Anderson Mill
Anderson Springs
Pond Springs
Hunters Chase
San Felipe
Board Walk
Roxie
Eddy
Roxborough
Sawtooth
Turtle Rock
Foxhound
Dove Vale
Deer Run
Fathom
Crest Ridge
Rustic Rock
Highview
Jolly Springs
Scotland Yard
Buckingham
Knights Cross
Charing Cross
Atlar
Bering
Argonne
Darcus
Jollyville
Technology
McNeil
Jekel
Pecan
Tarver
Lyndon B. Johnson
Rutledge
Parliament
Lynnhurst
Lonsdale
Woodthorpe
Meadowheath
Copperfield
Woodvale
Parkland
Longvale
Shady Oaks
Newberry
Barrywood
Charnwood
Tillcrest
Black Oak
Clear Oak
Bridgewood
Bancroft
Frostwood
Hurst
Amanda
Adonis
Leyton
Crown
Willa Park
Still Water
Morris
Yellow Slant
Oak
Lynoon
White Oak
Snowden
Brook
Skoolebrook
Forest
Still Water
Mello Meadow
Hymeadows
Village Green
Wood Blue
Robin Ridge
Caldwell
Lois
Missel Thrush
Swan
Woodland
Swallow
Wagon Gap
Cross Timber
Sandy Loam
Settlers
Mourning Dove
Tall Oak
Opal
Marble Creek
Hard Rock
Wind Song
Starview
Sweet Water
Morning Glory
Fence Post
Birch Bark
Aloe Vera
Tangle Briar
Prairie Dog
Rabbit
Iron Weed
Acorn
Gray Rock
Shell Fan
Creek
Lake
Hardwood
Wright
Broken Timber
Crest
Hidden Meadows
Village
Secret Wood
Blue Larkspur

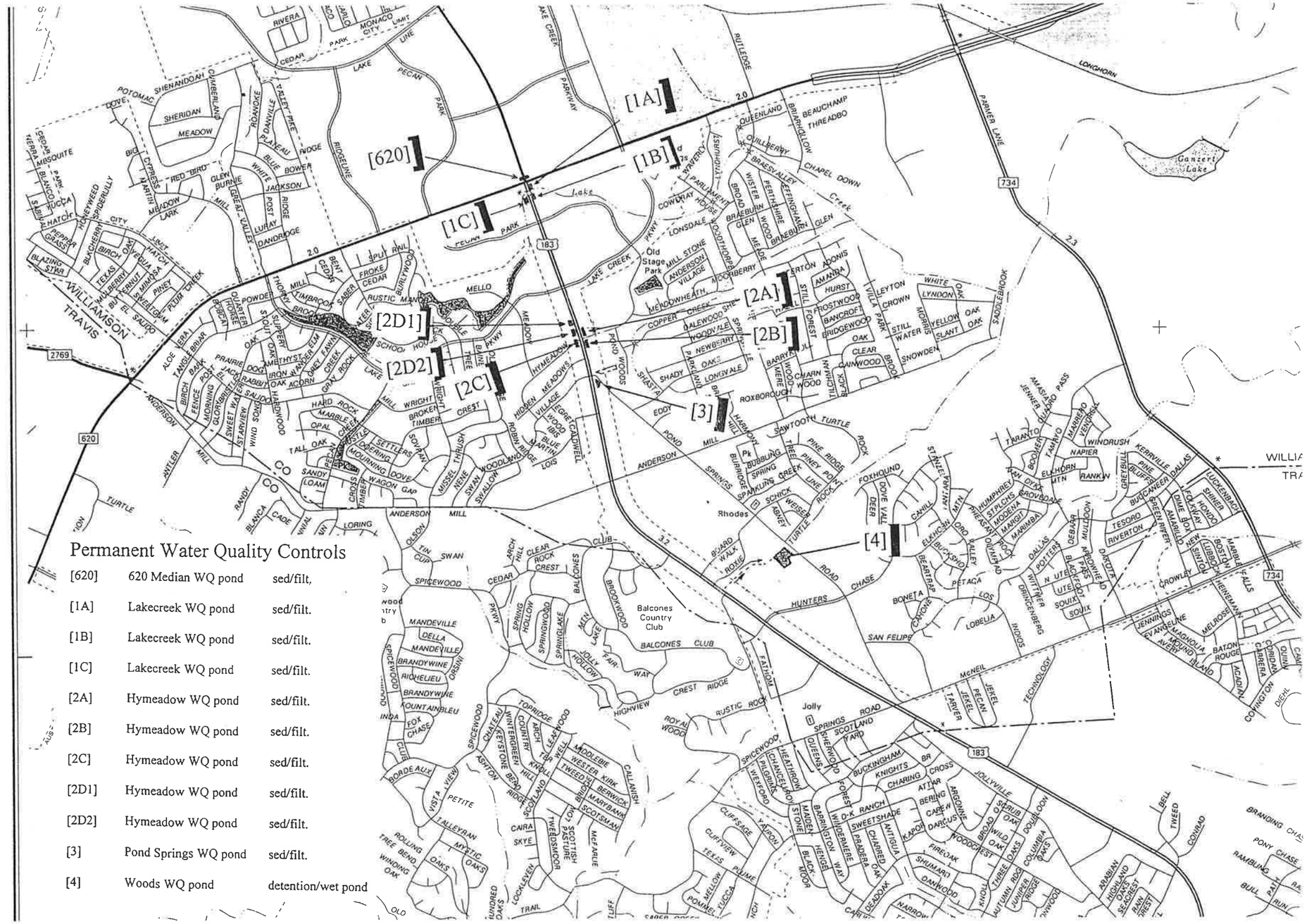

Permanent Water Quality Controls

[620]	620 Median WQ pond	sed/filt.
[1A]	Lakecreek WQ pond	sed/filt.
[1B]	Lakecreek WQ pond	sed/filt.
[1C]	Lakecreek WQ pond	sed/filt.
[2A]	Hymeadow WQ pond	sed/filt.
[2B]	Hymeadow WQ pond	sed/filt.
[2C]	Hymeadow WQ pond	sed/filt.
[2D1]	Hymeadow WQ pond	sed/filt.
[2D2]	Hymeadow WQ pond	sed/filt.
[3]	Pond Springs WQ pond	sed/filt.
[4]	Woods WQ pond	detention/wet pond

Turner Collie & Braden Inc.

MEETING MINUTES

RECEIVED
JUL 23 1997
TNRCC-Field Operations
Austin Region 11

Subject: U.S. 183 Drainage, System 5
Job No.: 73-07401-011

Place: TxDOT Austin District Design Office
Date & Time: 6/30/97

Attendees: Wes Burford, Gary Lantrip, Christine Ellington, Glenn Kunze, Ben West, Connie Bills

Preparer: Connie Bills CB Date: 7/18/97

The purpose of the meeting was to discuss the use of the wet pond for the detention and water quality treatment of U.S. 183 System 5's runoff. TC&B showed the pond layout on the Woods property to Christine Ellington of the TNRCC. We noted that all calculations were based on the City of Austin's proposed rules - additions to the COA's Environmental Criteria Manual Sections 1.6.3, 1.6.4, 1.6.6 and 1.6.10. We did not get into design specifics, but mainly discussed the concept. It was emphasized that we wanted to get her opinion concerning TNRCC approval of the use of a wet pond for permanent water quality control for System 5 and possibly other proposed outfalls along U.S. 183. If the concept was approved, then we would keep a line of communication open with her on the design details.

A copy of the proposed rules and the wet pond layout were given to Ms. Ellington to review. She said that she would get back to us with comments during the next week.

Spoke w/Gary ≃ 7/7 & told him that I couldn't see any problems at a glance. He said that he would contact TC&B.

cc: Attendees
Files
Larry Galfione

AGENDA

US 183 Update Status Meeting
TCB Job No. 72-07401-022
Time: 10:00 a.m.
Date: 6/23/98
Location: TxDOT

1. Water Quality Ponds

   a. System 5 (Woods Pond north of Hunter's Chase) - Wet Pond

   b. System 3 (Pond Springs) - Conventional Sedimentation and Filtration

   c. System 2 (Hymeadow) - Underground Sedimentation and Filtration

   d. System 1 South (Lake Creek) - Underground Sedimentation and Filtration

   e. System 1 North (620) - Conventional Sedimentation and Filtration

2. Water Quality Discussion/Q & A

3. Misc.

   a. Update of Systems 3 & 5 Drainage Areas

   b. West Cow Path Drainage Areas

   c. Status of Parcel 311 (Woods Tract)

   d. Schedule for Woods Culvert PS&E

TNRCC - CODE SHEET FOR EDWARDS AQUIFER INSPECTIONS

GENERAL INFORMATION

PROJECT NAME: TXDOT-U.S.183 I.D. NO. 98120101
REGION: 1 1
COUNTY CODE:
- ☐ 105 - Hays
- ☐ 227 - Travis
- ☒ 246 - Williamson
- ☐ 015 - Bexar
- ☐ 046 - Comal
- ☐ 136 - Kinney
- ☐ 163 - Medina
- ☐ 232 - Uvalde

TYPE OF INSPECTION:
- ☒ EAP - Plan Review
- ☐ EAF - Follow-up
- ☐ N/A - No Inspection

476-6595

INSPECTOR'S INITIALS: C L E

☒ REG — REGION APPROVAL/DENIAL OF PLAN

TYPE APPLICATION:
- ☒ NEW
- ☐ MOD - Modification
- ☐ EXC - Exception

TYPE PLAN:
- ☐ WPA - Water Pollution Abatement
- ☐ SCS - Sewage Collection System
- ☐ AST - Aboveground Storage Tank
- ☐ UST - Underground Storage Tank

12/01/98 DATE PLAN RECEIVED (MMDDYY)

12/02/98 DATE DETERMINED ADMINISTRATIVELY COMPLETE
- ☐ NA/01- Plan Incomplete
- ☐ NA/02 - Fee Not Paid

DATE PLAN RETURNED __/__/__
DATE RESPONSE DUE __/__/__
DATE RESPONSE REC'D __/__/__
RESPONSE ADEQUATE ☐ YES ☐ NO

12/15/98 DATE OF INSPECTION
- ☐ NA/01 - Plan Incomplete
- ☐ NA/02 - Fee Not Paid

01/14/99 DATE OF LETTER ☐ N/A

DECISION:
- ☒ APP - Approved
- ☐ DEN - Denied

☐ INI ☐ FOL — SITE INSPECTIONS

INSPECTOR'S INITIALS: ___ ___ ___

__/__/__ DATE OF INSPECTION
__/__/__ DATE OF REPORT

☐ TXD — TXDOT WATER POLLUTION ABATEMENT PLAN

TYPE APPLICATION:
- ☐ NEW
- ☐ MOD - Modification
- ☐ EXC - Exception

TYPE PLAN:
- ☐ TXD - TXDOT Water Pollution Abatement Plan

__/__/__ DATE PLAN RECEIVED
__/__/__ DATE OF INSPECTION
__/__/__ DATE FINDINGS SENT TO TXDOT LIAISON

TECHNICAL ASSISTANCE/OTHER LETTERS

☐ TEC ☐ NOV ☐ RFI ☐ CAR ☐ CLR

DATE OF REQUEST __/__/__ DATE RESPONSE DUE __/__/__
DATE LETTER SENT __/__/__ DATE RESPONSE REC'D __/__/__

RESPONSE ADEQUATE ☐ YES ☐ NO

Revised: 8/18/97

Barry R. McBee, *Chairman*
R. B. "Ralph" Marquez, *Commissioner*
John M. Baker, *Commissioner*
Jeffrey A. Saitas, *Executive Director*

TEXAS NATURAL RESOURCE CONSERVATION COMMISSION

Protecting Texas by Reducing and Preventing Pollution

January 14, 1999

Mr. John Roberts
Texas Department of Transportation
12719 Burnet Road
Austin, Texas 78758

Re: Edwards Aquifer, Williamson County
NAME OF PROJECT: U.S. 183 Mainlanes, Frontage Roads and Drainage Improvements; U.S. 183 from Fathom Circle to Lakeline Boulevard; Austin, Texas.
TYPE OF PLAN: Request for Approval of Water Pollution Abatement Plan (WPAP); 30 Texas Administrative Code (TAC) Chapter 213; Edwards Aquifer Protection Program.

Edwards Aquifer Protection Program File No. 98120101

Dear Mr. Roberts:

The Texas Natural Resource Conservation Commission (TNRCC) has completed its review of the WPAP application for the referenced project that was submitted by the Texas Department of Transportation to the Austin Regional Office on December 1, 1998. Final review of the WPAP submittal was completed after comments were received from the City of Austin on January 8, 1999. The WPAP proposed in the application is in general compliance with 30 TAC Chapter 213; therefore, approval of the plan is hereby granted subject to applicable state rules and the conditions in this approval letter. *This approval expires two (2) years from the date of this letter unless, prior to the expiration date, construction has commenced on the project or an extension of time has been requested.*

PROJECT DESCRIPTION

The proposed road project will have an area of 171.7 acres and will consist of upgrading a section of U.S. 183 to a freeway with mainlanes and frontage roads. This will include widening the existing road, constructing frontage roads, and installing bridge structures. The proposed impervious cover for the development is approximately 144.2 acres (84%).

PERMANENT POLLUTION ABATEMENT MEASURES

To prevent pollution of stormwater originating on-site or up-gradient of the site and potentially flowing across and off the site after construction, two full sedimentation/filtration basins, a wet pond, and eight underground sedimentation/filtration basins will be constructed.

GEOLOGY

According to the geologic assessment included with the submittal, no surface features occur on the project site. The Austin Regional Office site inspection of December 15, 1998, revealed the site to be as described in the geologic assessment.

STANDARD CONDITIONS

1. During the course of regulated activities related to this project, the applicant or his agent shall comply with all applicable provisions of 30 TAC Chapter 213, Edwards Aquifer. The applicant shall remain responsible for the provisions and conditions of this approval until such responsibility is legally transferred to another person or entity. At that time, the new person or entity shall assume responsibility for all provisions and conditions of this approval.

2. Any modification to the activities described in the referenced WPAP application following the date of approval may require the submittal of a WPAP to modify this approval, including the payment of appropriate fees and all information necessary for its review and approval.

3. Prior to commencing any regulated activity, the applicant or his agent must notify the Austin Regional Office in writing of the date on which the regulated activity will begin.

4. All contractors conducting regulated activities at the project location shall be provided a copy of this notice of approval. At least one complete copy of the approved WPAP and this notice of approval shall be maintained at the project location until all regulated activities are completed.

5. Temporary erosion and sedimentation (E&S) controls, i.e., silt fences, rock berms, stabilized construction entrances, or other controls described in the approved WPAP, must be installed prior to construction and maintained during construction. Temporary E&S controls may be removed when vegetation is established and the construction area is stabilized. If a water quality pond is proposed, it shall be used as a sedimentation basin during construction. The TNRCC may monitor stormwater discharges from the site to evaluate the adequacy of temporary E&S control measures. Additional controls may be necessary if excessive solids are being discharged from the site.

6. If any sensitive feature is discovered during construction, all regulated activities near the feature must be suspended immediately. The applicant or his agent must immediately notify the Austin Regional Office of the discovery of the feature. Regulated activities near the feature may not proceed until the executive director has reviewed and approved the methods proposed to protect the feature and the aquifer from potential adverse impacts to water quality.

7. At project locations where construction is initiated and abandoned, or not completed, the site shall be returned to a condition such that the aquifer is protected from potential contamination.

8. No wells exist on the site. Any abandoned wells shall be plugged in accordance with 30 TAC Chapter 238 or an equivalent method, as approved by the executive director.

   Any drill holes resulting from core sampling on-site or down-gradient of the site shall be plugged with native soil, from the bottom of the hole to the top of the hole, so as to not allow water or contaminants to enter the subsurface environment.

9. Pursuant to §26.136 of the Texas Water Code, any violations of the requirements in 30 TAC Chapter 213 may result in administrative penalties.

If you have any questions or require additional information, please contact Ms. Christine Connor of the Edwards Aquifer Protection Program of the Austin Regional Office at 512/339-2929.

Sincerely,

Jeffrey A. Saitas, P.E.
Executive Director
Texas Natural Resource Conservation Commission

JAS/clc

cc: Mr. Gary Lantrip, Texas Department of Transportation
Mr. Michael Heitz, Division Director, Watershed Protection Department, City of Austin
The Honorable John Doerfler, County Judge, Williamson County
Mr. Paulo Pinto, R.S., Williamson County & Cities Health District, Georgetown, Texas
Ms. Rosalinda Escalon, TNRCC Field Operations, Austin

Watershed Protection Department
Environmental Resource Management Division

206 E. 9th Street, Suite 16.100
(512) 499-2550

Mailing Address: P.O. Box 1088-WP
Austin, Texas 78767

TO: Christine Connor — **PHONE:** 339-2929

TTNRCC — **FAX:** 339-3795

CC:

FROM: Sylvia Pope — **PHONE:** 499-3429

COA WPD ERM — **FAX:** 499-2846

RE: TXDOT 183 WPAP comments

NUMBER OF PAGES: 4 (including this page)

Thanks for the extension!

I will send the design calcs, etc. with the letter – it is not being sent with this fax.

City of Austin

Founded by Congress, Republic of Texas, 1839
Municipal Building, Eighth at Colorado, P.O. Box 1088, Austin, Texas 78767 Telephone 512/499-200

January 8, 1999

TRANSMITTED VIA FAX

Ms. Patricia Reeh
Edwards Aquifer Protection Program
Austin Region Office
Texas Natural Resource Conservation Commission
1921 Cedar Bend, Suite 150
Austin, TX 78758

Re: Application for Approval of Water Pollution Abatement Plan for TXDOT expansion of US Highway 183 from Fathom Circle to Lakeline Boulevard, Austin, Texas.

Dear Ms. Reeh:

Watershed Protection Department staff have reviewed the application for the above-referenced project. The site is within the Recharge Zone of the Northern Edwards Aquifer and is within the Lake Creek watershed. The following comments are submitted for your consideration.

1. The Water Pollution Abatement Plan (WPAP) did not contain detailed information regarding the location and construction of underground sedimentation/filtration basins and the design calculations for water quality control structures. Connie Bills of Turner, Collie & Braden Inc. provided this information upon our request. A copy of the additional information is provided as an attachment to this letter.

2. The storm water pollution prevention plan (SWPPP) states that excess dirt on the road shall be broomed as needed or as directed by the engineer. The brooming should be conducted with a vacuum broom that removes material rather than a power broom device in order to prevent runoff of residual sediment from the road surface.

3. The maintenance plan for stormwater controls that was included in the application is inappropriate for the underground sedimentation/filtration basins and the proposed wet pond due to the unique requirements for inspection and maintenance of these structures. Please require that TXDOT submit a maintenance plan and schedule specific to the underground sedimentation/filtration basins and a plan specific to the wet pond. We recommend that the structures be inspected monthly, following any rainfall with more than 1 inch of total accumulation, and immediately following the spill or any harmful substance that may have entered the stormsewer system. If a roadway spill occurs that results in a release to an underground sedimentation/filtration basin, then the basin chambers should be inspected and tested to determine if removal of the filtration material is warranted.

4. A device to capture trash should be placed at the inlet to the underground sedimentation/filtration basins. Accumulated debris and trash should be removed from these devices on a routine basis.

5. The wet pond design and sizing equations used appear to be appropriate for this type of water quality control structure.

6. The maintenance plan for the wet pond should include a description of vegetation maintenance, nuisance vegetation removal, provisions for providing make-up water in the event of drought, and a procedure describing how to measure accumulated sediment and determining when to remove it.

7. The sedimentation/filtration basins have been designed using the recommended capture rates proposed in the Draft TNRCC Technical Guidance Manual for Permanent Structural BMPs. According to the WPAP, the project capture volumes and load reductions meet or exceed the criteria for capture of the first one-half inch of stormwater runoff. The City of Austin commends TXDOT for being proactive in the design of the stormwater controls to comply with the adopted Edwards Rules but would like to suggest that TXDOT consider using sizing criteria presented in our Environmental Criteria Manual (ECM). These suggestions are as follows:

Water Quality Volume (WQV) for Sedimentation-Sand Filtration Systems – The WQV should increase by 0.10" for each 10% increase in impervious cover over 20%. The criteria currently being used for ponds in Austin is:

Impervious Cover	Water Quality Volume (inches)
≤ 20%	0.50
30%	0.60
40%	0.70
50%	0.80
60%	0.90
70%	1.00
80%	1.10
90%	1.20
100%	1.30

Based on a review of the drainage area information, volumes of between 0.85 and 1.15" would be more appropriate.

Sedimentation-Sand Filtration Surface Areas – When sizing the sedimentation and filtration basin surface areas, the equations referred to in the WPAP assume that all ponds will be of the "full" sedimentation-filtration design, which requires an extended detention outlet from the sedimentation pond to the filtration basin. If only a gabion wall is placed between the two, this is considered to be a "partial" sedimentation-filtration design, and a larger sand bed area is required (but the overall surface area of the system is not larger). For partial systems the sizing equations are:

$As = WQV * (1/Ds - 1/10)$
$Af = WQV/10$

Where:
As = surface area (square feet) of the sedimentation chamber (basin);
Af = surface area (square feet) of the filtration basin;
WQV = water quality volume (cubic feet); and
Ds = depth of the sedimentation chamber (basin) (feet).

These suggestions are presented in light of the high impervious cover noted for the project, recognizing that the TGM criteria would result in more frequent bypasses of untreated stormwater in this impervious cover range. Also, the Draft TGM has not received final approval by the TNRCC and therefore; the most protective approved criteria (COA ECM) is suggested.

8. The proposed wet pond in the vicinity of Roxie Drive is likely to intercept the water table under high rainfall conditions as indicated by recent construction problems encountered during construction of a wastewater line along Roxie Drive. The water table was located at a depth of approximately 12 feet below ground surface directly behind the Southwestern Bell building. A void horizon occurs at this depth and likely conveys flow laterally towards the Pond Springs area that occurs south of Anderson Mill Road east of the Turtle Rock area.

Thank you for the opportunity to review and comment on these plans. Please feel free to contact Sylvia Pope at 499 - 3429 or me at 499-2224 if you have any questions regarding these comments.

Sincerely,

Edward D Peacock

Edward D. Peacock, P.E.
Section Manager, Water Resources Evaluation
Environmental Resources Management Division
Watershed Protection Department

cc: Central Files
Nancy L. McClintock, Division Manager, Environmental Resources Management
Sylvia Pope, Hydrogeologist, ERM, WRE
Pat Hartigan, ERM, Watershed Management
Chuck Lesniak, ERM, Water Quality Regulations

Barry R. McBee, *Chairman*
R. B. "Ralph" Marquez, *Commissioner*
John M. Baker, *Commissioner*
Jeffrey A. Saitas, *Executive Director*

TEXAS NATURAL RESOURCE CONSERVATION COMMISSION

Protecting Texas by Reducing and Preventing Pollution

December 2, 1998

Mr. Michael Heitz, AIA, Division Director
Watershed Protection Department
P.O. Box 1088
Two Commodore Plaza, 17th Floor
Austin, TX 78767

Re: Edwards Aquifer, **Williamson County**
Project name: **TXDOT-US Highway 183;** US 183 from Fathom Circle to Lakeline Blvd; Austin, Texas.
Plan Type: Application for Approval of Water Pollution Abatement Plan (WPAP); 30 Texas Administrative Code (TAC) Chapter 213; Edwards Aquifer Protection Program.

Dear Mr. Heitz :

The enclosed PAP application is being forwarded to you pursuant to the Edwards Aquifer Protection Rules. The Texas Natural Resource Conservation Commission (TNRCC) is required by 30 TAC Chapter 213 to provide copies of all applications to affected incorporated cities and underground water conservation districts for their comments prior to TNRCC approval.

Please forward your comments to this office by **January 2, 1999.**

Should you have any questions concerning this matter, please contact a representative of the Edwards Aquifer Protection Program at the Austin regional office (512) 339-2929.

Sincerely,

Patricia M. Reeh
Water Section Manager
Austin Regional Office

PMR/neg

Enclosure

Watershed Protection Department
Environmental Resource Management Division

206 E. 9th Street, Suite 16.100
(512) 499-2550

Mailing Address: P.O. Box 1088-WP
Austin, Texas 78767

TO: Christine Connor — **PHONE:** 339-2929

TNRCC — **FAX:** 339-3795

CC:

FROM: Sylvia Pope — **PHONE:** 499-3429

COA WPD ERM — **FAX:** 499-3846

RE: TXDOT 183 WPAP comments

NUMBER OF PAGES: 4 (including this page)

Thanks for the extension!

I will send the design calcs, etc. with the letter – it is not being sent with this fax.

City of Austin

Founded by Congress, Republic of Texas, 1839
Municipal Building, Eighth at Colorado, P.O. Box 1088, Austin, Texas 78767 Telephone 512/499-2000

January 8, 1999

TRANSMITTED VIA FAX

Ms. Patricia Reeh
Edwards Aquifer Protection Program
Austin Region Office
Texas Natural Resource Conservation Commission
1921 Cedar Bend, Suite 150
Austin, TX 78758

Re: Application for Approval of Water Pollution Abatement Plan for TXDOT expansion of US Highway 183 from Fathom Circle to Lakeline Boulevard, Austin, Texas.

Dear Ms. Reeh:

Watershed Protection Department staff have reviewed the application for the above-referenced project. The site is within the Recharge Zone of the Northern Edwards Aquifer and is within the Lake Creek watershed. The following comments are submitted for your consideration.

1. The Water Pollution Abatement Plan (WPAP) did not contain detailed information regarding the location and construction of underground sedimentation/filtration basins and the design calculations for water quality control structures. Connie Bills of Turner, Collie & Braden Inc. provided this information upon our request. A copy of the additional information is provided as an attachment to this letter.

2. The storm water pollution prevention plan (SWPPP) states that excess dirt on the road shall be broomed as needed or as directed by the engineer. The brooming should be conducted with a vacuum broom that removes material rather than a power broom device in order to prevent runoff of residual sediment from the road surface.

3. The maintenance plan for stormwater controls that was included in the application is inappropriate for the underground sedimentation/filtration basins and the proposed wet pond due to the unique requirements for inspection and maintenance of these structures. Please require that TXDOT submit a maintenance plan and schedule specific to the underground sedimentation/filtration basins and a plan specific to the wet pond. We recommend that the structures be inspected monthly, following any rainfall with more than 1 inch of total accumulation, and immediately following the spill or any harmful substance that may have entered the stormsewer system. If a roadway spill occurs that results in a release to an underground sedimentation/filtration basin, then the basin chambers should be inspected and tested to determine if removal of the filtration material is warranted.

4. A device to capture trash should be placed at the inlet to the underground sedimentation/filtration basins. Accumulated debris and trash should be removed from these devices on a routine basis.

5. The wet pond design and sizing equations used appear to be appropriate for this type of water quality control structure.

6. The maintenance plan for the wet pond should include a description of vegetation maintenance, nuisance vegetation removal, provisions for providing make-up water in the event of drought, and a procedure describing how to measure accumulated sediment and determining when to remove it.

7. The sedimentation/filtration basins have been designed using the recommended capture rates proposed in the Draft TNRCC Technical Guidance Manual for Permanent Structural BMPs. According to the WPAP, the project capture volumes and load reductions meet or exceed the criteria for capture of the first one-half inch of stormwater runoff. The City of Austin commends TXDOT for being proactive in the design of the stormwater controls to comply with the adopted Edwards Rules but would like to suggest that TXDOT consider using sizing criteria presented in our Environmental Criteria Manual (ECM). These suggestions are as follows:

Water Quality Volume (WQV) for Sedimentation-Sand Filtration Systems – The WQV should increase by 0.10" for each 10% increase in impervious cover over 20%. The criteria currently being used for ponds in Austin is:

Impervious Cover	Water Quality Volume (inches)
≤ 20%	0.50
30%	0.60
40%	0.70
50%	0.80
60%	0.90
70%	1.00
80%	1.10
90%	1.20
100%	1.30

Based on a review of the drainage area information, volumes of between 0.85 and 1.15" would be more appropriate.

Sedimentation-Sand Filtration Surface Areas – When sizing the sedimentation and filtration basin surface areas, the equations referred to in the WPAP assume that all ponds will be of the "full" sedimentation-filtration design, which requires an extended detention outlet from the sedimentation pond to the filtration basin. If only a gabion wall is placed between the two, this is considered to be a "partial" sedimentation-filtration design, and a larger sand bed area is required (but the overall surface area of the system is not larger). For partial systems the sizing equations are:

$As = WQV * (1/Ds - 1/10)$
$Af = WQV/10$

Where:
As = surface area (square feet) of the sedimentation chamber (basin);
Af = surface area (square feet) of the filtration basin;
WQV = water quality volume (cubic feet); and
Ds = depth of the sedimentation chamber (basin) (feet).

These suggestions are presented in light of the high impervious cover noted for the project, recognizing that the TGM criteria would result in more frequent bypasses of untreated stormwater in this impervious cover range. Also, the Draft TGM has not received final approval by the TNRCC and therefore; the most protective approved criteria (COA ECM) is suggested.

8. The proposed wet pond in the vicinity of Roxie Drive is likely to intercept the water table under high rainfall conditions as indicated by recent construction problems encountered during construction of a wastewater line along Roxie Drive. The water table was located at a depth of approximately 12 feet below ground surface directly behind the Southwestern Bell building. A void horizon occurs at this depth and likely conveys flow laterally towards the Pond Springs area that occurs south of Anderson Mill Road east of the Turtle Rock area.

Thank you for the opportunity to review and comment on these plans. Please feel free to contact Sylvia Pope at 499 - 3429 or me at 499-2224 if you have any questions regarding these comments.

Sincerely,

Edward D Peacock

Edward D. Peacock, P.E.
Section Manager, Water Resources Evaluation
Environmental Resources Management Division
Watershed Protection Department

cc: Central Files
Nancy L. McClintock, Division Manager, Environmental Resources Management
Sylvia Pope, Hydrogeologist, ERM, WRE
Pat Hartigan, ERM, Watershed Management
Chuck Lesniak, ERM, Water Quality Regulations

TurnerCollie & Braden Inc.
Engineers • Planners • Project Managers

400 West 15th Street
Suite 500
Austin, Texas 78701
(512) 472-4519
Fax (512) 472-7519
E-Mail: tcbaus@io.com

RECEIVED
JAN 15 1999
TNRCC-Field Operations
Austin Region 11

TO: Sylvia Pope	FAX# 499-2846
FROM: Connie Bills	PHONE: 512-472-4519 FAX: 512-472-7519
DATE: 1/7/99	COVER + 22 PAGE(S)
REGARDING:	

MESSAGE

Include are the pond calcs for System 1 & 2.
I will send 3 & 5 as I gather them.

Connie Bills

Turner Collie & Braden Inc.
Engineers • Planners • Project Managers

COMPUTATION SHEET

SUBJECT US 183 SEC 1
POND 1A (LAKECREEK)
JOB NO. 7207401022 SHEET NO. ____ OF ____
BY RAB DATE 9-9-98
CHKD BY ____ DATE ____

POND 1A

POND WIDTH = 30 FT
TOTAL LENGTH = 158.33 HT OVER WEIR = 2.0 FT

SPLITTER BOX = 18 X 21 FT

DROP FROM SPLITTER BOX TO SED POND = 1.5 FT

SED POND LENGTH = 118 FT

FILTER POND LENGTH = 29 FT

POND DEPTH = 5 FT

TOP OF PROP GROUND = 924.5

FL OF 7'x4' RCP INTO SPLITTER BOX = 914.28

914.28 - 1.5 = 912.78 FL S.P @ BEG ⑤

912.78 + 5 = 917.78 TOP OF WEIR / TOP OF WATER ELEV IN POND

917.78 + 2 = 919.78 SOFFIT OF POND

919.78 + 2.5 = 922.28 TOP OF POND
(2.5 = TOP THICKNESS)

924.5 - 922.28 = 2.22 FT COVER @ LOWEST POINT

914.28 + 4 = 918.28 SOFFIT OF 7'x4'

918.28 + 8" = 918.95 TOP OF 7'x4'

918.95 < 919.78

917.78 - 914.28 = 3.5' HT OF WEIR

Turner Collie & Braden Inc.
Engineers • Planners • Project Managers

COMPUTATION SHEET

SUBJECT US 183 SEC 1 C
POND 1A
JOB NO. 720740 1022 SHEET NO. ____ OF ____
BY RAB DATE 9-9-98
CHKD BY ____ DATE ____

WATER QUALITY CALS

AREAS

0.22 0.31 0.12 0.23 0.27 0.60
1D-67, 1D-68, 1D-72, 1D-71, 1D-70 1D-69 = 1.75

0.77 0.66 0.16 0.16 0.05 0.05 0.16 0.23
1A-53, 1A-54, 1A-55, 1A-57, 1A-58, 1A-59, 1A-60, 1A-61,
0.49 0.17 0.23 0.31 0.60 0.23 0.55 0.27 0.23 0.76
1A-63, 1A-64, 1A-65, 1A-66, 1A-67, 1A-68, 1A-69, 1A-70, 1A-71, 1A-72
0.74
1A-73, ... = 6.82 AC

$A_T = 8.57$ AC

AREA TREATED IN POND 1A

@ 1A-64 TO 1A 73 125.71
@ 1A-71 TO 1A 73 22.40
@ 1D-72 TO 1D73 16.20
164.31 CFS

125.71
+ 16.20
141.91 CFS

148.50
+ 16.20
164.70

$Q = \left(\frac{1.486}{n} A R^{2/3}\right) S^{1/2}$

C

for n = 0.012

4'x4' C = 1990
S = 0.40%
Q = 125.86

S = 0.60%
Q = 166.5

5'x4' C = 2660
S = 0.40%
Q = 168.23

S = 0.30%
Q = 145.69

Turner Collie & Braden Inc.
Engineers • Planners • Project Managers

COMPUTATION SHEET

SUBJECT US 183 Sec 1 Sys 1
WQP's - N. of LAKE CREEK
JOB NO. _____ SHEET NO. 1 OF _____
BY CDB DATE 9/8/98
CHKD BY _____ DATE _____

POND 1A

WATER QUALITY CALS

LT SIDE

DRAINAGE AREAS

1A-33 - A-71 will have to leave out 1A-72 1A-73

From Spreadsheet sys1NSZNG.xls

Area = 6.82 ac

WQV = 12,378.30 cf

A_s = 1251.83 sf

A_f = 687.68 sf

V_f = 2,475.66 cf

RT SIDE

DRAINAGE AREAS

MI inlets 1D-67 to 1D-72 - could take across to Lt side - & treat Lt & Rt

If do that Area = 8.57 ac - Entire Area

WQV = 15,554.55 cf to be treated

A_s = 1,555.45 sf

A_f = 864.14 sf

V_f = 3,110.91 cf

Turner Collie & Braden Inc.
Engineers • Planners • Project Managers

COMPUTATION SHEET

SUBJECT US 183 SEC 1
/ A POND 1A

JOB NO. 7207401022 SHEET NO. ____ OF ____

BY RAB DATE 9-9-98

CHKD BY ____ DATE ____

WATER QUALITY CALC.

REQUIRED

SEE PREVIOUS PAGES

ACTUAL

$V_{SED} = (30-15)(214)(5) + (93)(30)(5) = 15,600$ CF

$15,600 > 15,554.55$ CF

$A_{SED} = (15)(22) + 93(30) = 3120$ SF

$3120 > 1555.45$

$A_{FILT} = 29(30) = 870$ SF

$870 > 864.14$

$V_{FILT} = 29(30)(5) = 4350$ CF

$4350 > 3110.91$

STA 839+60.51 - 839+58 912.47 59.08 62.11

Turner Collie & Braden Inc.
Engineers • Planners • Project Managers

COMPUTATION SHEET

SUBJECT US 183 Sec 1
System 1S Pond B

JOB NO. 7207441022 SHEET NO. ____ OF ____

BY RAB DATE 8-6-98

CHKD BY ____ DATE ____

1SE50.DAT
1SEPD.DAT

POND 1B

POND DIMENSIONS

POND WIDTH = 30 FT

TOTAL LENGTH = 126.83 FT

SPLITTER BOX = 10 FT X 14.5 FT

DROP FROM SPLITTER BOX TO SED POND = 2.5

SED POND LENGTH = 91.5

FILTER POND LENGTH = 24 FT

POND DEPTH = 5 FT

LOWEST ELEV. ON PROP DITCH = 925.6

925.6 - 1.1 925.6

924.6 - 2 = 922.60

922.60 - 1.5 = 921.1

921.10 - 5 = 916.10

USE 916.

916 + 5 = 921.00 EL OF WATER IN SED POND / TOP OF WEIR

921.0 + 1.5 = 922.50 SOFFIT OF POND

922.50 + 2 = 924.50 TOP OF POND

HT OF WEIR = 921 - 918.5 = 2.5

922.5 - 4.5" - 42" = 918.63

918.63 - 916 = 2.63 ~ 2.5

916 + 2.5 = 918.5 FL OF 42" INTO SB

918.5 + 42" = 922.00 SOFFIT OF 42"

922.00 + 4.5" = 922.38

922.38 < 922.50

1SE50.DAT

Turner Collie & Braden Inc.
Engineers • Planners • Project Managers

COMPUTATION SHEET

SUBJECT US 183 Sec 1
System 1 Pond

JOB NO. 720740102.2 SHEET NO. ____ OF ____

BY RAB DATE 6-29-98

CHKD BY ____ DATE ____

REQUIRED

0.47 0.41 0.34 0.87 0.56 0.38 0.32 0.77 0.39 0.25 0.32 0.39 0.22
IB-1, IB-2, IB-3, IB-4, IB-5, IB-6, IB-7, IB-8, IB10, IG-1, IB-11, IB-12, IB-13,
0.21 0.16 0.05 0.38 0.20 0.05 0.36
IB-14, IB-15, IB-16, IB-17, IB-18, IB-19, IB-20,

pipe into SB 42"

A_T = 7.09 AC

$WQV = (7.09)(43,560)(0.5)/12 = 12,868.35$ CF

$A_S = \frac{A_D H}{10} = 7.09(43,560)(\frac{0.5"}{0.042})/(10) = 1286.84$ SF

$A_F = \frac{A_D H}{18} = 7.09(43,560)(0.042)/18 = 714.91$ SF

$V_{FILT} = 0.2(WQV) = 2,573.67$ CF

0.23 0.29 1.57 0.59 0.24 0.53 0.42 0.47 0.39 0.39 0.26 0.53
IC-1, IC-50, IC-3, IC-4 IC-6, IC-7, IC-9, IC-11, IC-12, IC-13, IC-14, IC-15
0.16 0.45 0.55 0.32 0.16
IC-16, IC-18, IC-19, IC-20, IC-21

$A_T = 7.35$

$WQV = (7.35)(43,560)(0.5)/12 = 13,340.25$ CF

$A_S = \frac{A_D H}{10} = 7.35(43,560)(0.042)/10 = 1334.03$ SF

$A_F = \frac{A_D H}{18} = 7.35(43,560)(0.042)/18 = 714.13$ SF

$V_{FILT} = 0.2(WQV) = 2668.05$ CF

Turner Collie & Braden Inc.
Engineers • Planners • Project Managers

COMPUTATION SHEET

SUBJECT US 183 Sec 1
System 1 S Ponds
JOB NO. 720740102 22 SHEET NO. ____ OF ____
BY RAB DATE 7/8/98
CHKD BY ____ DATE ____

POND 1 B

A = 7.09 AC

REQUIRED

$WQV = (7.09)(43,560)(0.5"/12) = 12,868.85\ CF$

$A_S = \frac{A_D H}{10} = (7.09)(43,560)(0.5/12)/10 = 1286.84\ SF$

$A_f = \frac{A_D H}{18} = (7.09)(43,560)(0.5/12)/18 = 714.91\ SF$

$V_{FILT} = 0.2\ WQV = 2573.67\ CF$

Actual

$V_{SED\ POND} = (30-11)(14.5+1)(5) + (30)(76)(5) = 12,872.50\ CF$

$12,872.50\ CF > 12,868.35\ CF$

$A_S = (15.5)(19) + (76)(30) = 2574.50\ SF$

$2574.50\ SF > 1286.84\ SF$

$A_f = (24)(30) = 720\ SF$

$720\ SF > 714.91\ SF$

$V_{FILT} = (24)(30)(5) = 3600\ CF$

$3600\ CF > 2573.67\ CF$

Turner Collie & Braden Inc.
Engineers • Planners • Project Managers

COMPUTATION SHEET

SUBJECT US 183 Sec 1
System 1S Pond C
JOB NO. 7207401022 SHEET NO. ____ OF ____
BY RAB DATE 8-10-98
CHKD BY ____ DATE ____

POND 1C

1SWDO.DAT
1-1SW-50.DAT

POND DIMENSIONS

POND WIDTH = 30 FT

TOTAL LENGTH = 116.83

SPLITTER BOX = 10 FT x 14.5 FT

DROP FROM SPLITTER BOX TO SED POND = 1.75

SED POND LENGTH = 80.5 FT

FILTER POND LENGTH = 25 FT

POND DEPTH = 6 FT

LOWEST ELEV. ON PROP DITCH = 927.3

927.3 - 1 = 926.3

926.3 - 2 (LID) = 924.3

924.3 - 1.5 = 922.8

922.8 - 6 = 916.8

USE 916.75 (FL OF POND @ BEG)

916.75 + .6 = 922.75 EL OF WATER IN SED POND / TOP OF WEIR

922.75 + 1.5 = 924.25 SOFFIT OF POND

924.25 + 2 = 926.25 TOP OF POND

924.25 - 4" - 3' = 920.12

920.92 - 916.75 = 4.17

916.75 + 4 = 920.75 too High

FL 42" INTO 6B

918.5 - 916.75 = 1.75

918.5 + 42" + 4.5" = 922.38

922.38 < 924.25

Turner Collie & Braden Inc.
Engineers • Planners • Project Managers

COMPUTATION SHEET

SUBJECT US 183 Sec 1
SYSTEM 1 Pond
JOB NO. 72074O1022 SHEET NO. ____ OF ____
BY RAB DATE 6-29-98
CHKD BY ____ DATE ____

REQUIRED

0.47 0.41 0.34 0.87 0.66 0.38 0.32 0.77 0.39 0.25 0.32 0.39 0.22
IB-1, IB-2, IB-3, IB-4, IB-5, IB-6, IB-7, IB-8, IB-10, IB-11, IB-12, IB-13,
0.21 0.16 0.05 0.38 0.20 0.05 0.36
IB-14, IB-15, IB-16, IB-17, IB-18, IB-19, IB-20,

pipe into SB 42"

A_T = 7.09 AC

$WQV = (7.09)(43,560)(0.5)/12 = 12,868.35$ CF

$A_S = \frac{A_D H}{10} = 7.09(43,560)(\frac{0.5}{0.042})/(10) = 1286.84$ SF

$A_F = \frac{A_D H}{18} = 7.09(43,560)(0.042)/18 = 714.91$ SF

$V_{FILT} = 0.2(WQV) = 2,573.67$ CF

0.23 0.29 1.57 0.59 0.24 0.53 0.42 0.47 0.39 0.39 0.26 0.23
IC-1, IC-50, IC-3, IC-4 IC-6, IC-7, IC-9, IC-11, IC-12, IC-13, IC-14, IC-15
0.16 0.45 0.55 0.32 0.16
IC-16, IC-18, IC-19, IC-20, IC-21

A_T = 7.35

$WQV = (7.35)(43,560)(0.5)/12 = 13,340.25$ CF

$A_S = \frac{A_D H}{10} = 7.35(43,560)(0.042)/10 = 1334.03$ SF

$A_F = \frac{A_D H}{18} = 7.35(43,560)(0.042)/18 = 714.13$ SF

$V_{FILT} = 0.2(WQV) = 2668.05$ CF

Turner Collie & Braden Inc.
Engineers • Planners • Project Managers

COMPUTATION SHEET

SUBJECT US 183 Sec 1
Sys 1S Pond C.
JOB NO. 7207401022 SHEET NO. ____ OF ____
BY RAB DATE 8-10-98
CHKD BY ____ DATE ____

WATER QUALITY CALC.

ACTUAL

80.5 - 15.5

$V_{SED} = (30-11)(14.5+1)(6) + (30)(65)(6) = 13,467.00$ CF

$13,467 > 13,340.25$

$A_S = (15.5)(19) + (65)(30) = 2244.50$ SF

$2244.50 > 1334.03$

$A_F = (25)(30) = 750$ SF

$750 > 714.13$

$V_{FILT} = (25)(30)(6) = 4500$ CF

$4500 > 2668.05$

Turner Collie & Braden Inc.
Engineers • Planners • Project Managers

COMPUTATION SHEET

SUBJECT US 183 Sec 1
System 2 Ponds
JOB NO. 7207401022 SHEET NO. ____ OF ____
BY LAB DATE 6/24/98
CHKD BY ____ DATE ____

POND 2A

POND DIMENSIONS

POND WIDTH = 30 FT POND DEPTH = 5 FT

TOTAL LENGTH = 146.8333

SPLITTER BOX = 10 FT x 14.5 FT

DROP FROM SPLITTER BOX TO SED POND = 1.5 FT

SED. POND LENGTH = 106.8 FT

FILTER POND LENGTH = 28 FT

WATER QUALITY

$V_{SED\ POND} = (30-11)(14.5+1)(5) + (30)(91)(5) = 15,122.50\ CF$
(1472.5; 13650)

$15,122.50 > 15,010.05$

$A_s = (15.5)(19) + (91)(30) = 3024.50\ SF$

$3024.50 > 1501.01$

$A_f = (28)(30) = 840\ SF$

$840 > 833.89$

$V_{FILT} = (28)(30)(5) = 4200\ CF$

$4200 > 3002.01$

SPLITTER BOX

P = Ht of weir = 3.5
H = Ht over weir = 1.5
$Q = C L H^{3/2}$

$Q = 92.5\ cfs$

Turner Collie & Braden Inc.
Engineers • Planners • Project Managers

COMPUTATION SHEET

SUBJECT US 183 System 2
Pond for A

JOB NO. 7207401022 SHEET NO. ____ OF ____

BY RAB DATE 5-8-98

CHKD BY ____ DATE ____

System 2A

AREA = 0.15 + 1.25 + 0.21 + 0.57 + 0.34 + 0.17 + 0.18 + 0.40 + 0.61 + 1.86 + 0.32 + 0.45 + 0.44 + 0.45 + 0.45 + 0.42

AREA = 8.27 AC

$WQV = (8.27)(43,560)(0.5")/12 = 15,010.05$ CF

$A_S = \frac{A_D H}{10} = (8.27(43,560)0.5)/12)/10 = 1501.01$ SF

$A_f = \frac{A_D H}{18} = (8.27)(43,560)(@5/12)/18 = 833.89$ SF

$V_{FILT} = 0.2\ WQV = (0.2)(15,010.05) = 3002.01$ CF

$V_{HAZ\ MAT}$ 336.80 CF

50 YR FLOW INTO SB = 55.89 CFS

H = HT OVER WEIR = 1.5

P = HT OF WEIR = 3.5

$C = (0.6035 + 0.0813(H/P) + 0.000295/P)(1 + 0.00361/H)^{3/2}$

C = 0.64

$Q = \frac{2}{3} C L \sqrt{2g}\ H^{3/2} = 90.43$ CFS

55.89 < 90.43

ner Collie & Braden Inc.
neers • Planners • Project Managers

COMPUTATION SHEET

SUBJECT US 183 Sec 1
System 2 Ponds
JOB NO. 7207401022 SHEET NO. ____ OF ____
BY RAB DATE 7-31-98
CHKD BY ____ DATE ____

POND 2A CONT

915.06 − 2.08 = 913.58 FL 4" PVC @ BEG

913.58 − 23(0.01) = 913.35 FL 4" PVC @ END

913.35 + 4" − 6" = 913.18 FL 6" PVC

913.18 − 12.5(0.01) = 913.06 FL 6" PVC @ MIDPT

913.06 + 6" − 8" = 912.89 FL 8" PVC @ MIDPT

912.89 − 3.92(0.01) = 912.85 FL 8" PVC @ OUTSIDE OF POND

WATER QUALITY CALS

ACTUAL

V_{SED} = (30−11)(14.5+1)(5) + (30)(91)(5) = 15,122.50 CF

15,122.50 > 15,010.05

A_{SED} = 19(15.5) + (91)(30) = 3024.50 SF

3024.50 > 1501.01

A_{FILT} = (30)(28) = 840 SF

840 > 833.89

V_{FILT} = 30(28)(5) = 4200 CF

4200 > 3002.01

Turner Collie & Braden Inc.
Engineers • Planners • Project Managers

COMPUTATION SHEET

SUBJECT US 183 Sec 1
System 2 Ponds
JOB NO. 7207401022 SHEET NO. ____ OF ____
BY RAB DATE 7/6/98
CHKD BY ____ DATE ____

thickness 2.0'

POND 2B

POND DIMENSIONS

POND WIDTH = 30 FT

TOTAL LENGTH = ~~64.83~~ FT

SPLITTER BOX = 10FT x 14.5FT

DROP FROM SPLITTER BOX TO SED POND = 3.5 FT

SED POND LENGTH = 58.5 FT

FILTER POND LENGTH = 15FT

POND DEPTH = 5FT

PROFILE @ LOWEST PT OF DITCH = 928.3

FL 30" INTO POND = 921.99

921 ~~FF~~ 921.3

921.99 - 3.5 = 918.49 = FL. @ BEG SED POND (3)

918.49 + 5 = 923.49 TOP OF WEIR / WATER ELEV.

923.49 + 1.5 = ~~924.99~~ SOFFIT OF POND

924.99 + 2 = ~~926.99~~ TOP OF POND

928.3 - 926.99 = 1.31' COVER OVER POND @ LOWEST PT OF DITCH

HT OF WEIR = 1.50

921.99 + 2.5 + 3.5" = 924.78

Turner Collie & Braden Inc.
Engineers • Planners • Project Managers

COMPUTATION SHEET

SUBJECT US 183 System 2
POND FOR B
JOB NO. 220740102 SHEET NO. ____ OF ____
BY RAB DATE 5-8-98
CHKD BY ____ DATE ____

SYSTEM 2B

AREA = 0.24 + 0.40 + 0.18 + 0.97 + 0.27 + 0.20 + 0.24 + 0.56 + 1.23 = 4.29 AC

$WQV = (4.29)(43,560)(0.5/12) = 7786.35$ CF

$A_S = \frac{A_O H}{10} = (4.29)(43,560)(0.5/12)/10 = 778.64$ SF

$A_F = \frac{A_O H}{18} = (4.29)(43,560)(0.5/12)/18 = 432.58$ SF

$V_{FILT} = 0.2\ WQV = (0.2)(7786.35) = 1557.27$ CF

~~$V_{HAZMAT} = 1336.80$ CF~~

$V_{SED} = (30-11)(14.5+1)(5) + (30)(43)(5) = 7922.50$ CF
7922.50 > 7786.35

$A_{SED} = 19(15.5) + (30)(43) = 1584.50$ SF
1584.50 > 778.64

$A_F = 15(30) = 450$ SF
450 > 432.58

$V_{FILT} = 15(30)(5) = 2250$ CF
2250 > 1557.27

Turner Collie
Engineers + Planners

COMPUTATION SHEET

SUBJECT US 183 Sec 1
System 2 Ponds

JOB NO. 72674.0122 SHEET NO. ____ OF ____

BY RAB DATE 7/17/98

CHKD BY ____ DATE ____

POND

POND DIMENSIONS

POND WIDTH = 30 FT

TOTAL LENGTH = 193.83 FT

SPLITTER BOX = 10 FT x 14.5 FT

DROP FROM SPLITTER BOX TO SED POND = 4.50 FT

SED POND LENGTH = 81.5 FT

FILTER POND LENGTH = 31 FT

POND DEPTH = 6.5 FT

HT OVER WEIR = 1.5 FT

TOP OF PROP DITCH = 930.7

930.7 - 1.5 - 2 (thickness of top) = 927.20

927.20 - 1.5 = 925.70

925.70 - 6.5 = 919.20

927.20 - 4" - 36" = 923.87

~~923.87 - 4" = 923.53~~

~~923.87 - 919.20 = 4.67~~

~~4.67 - 4.50 = 0.17~~

919.20 + 0.17 = 919.37 ≈ 919.4

919.4 + 6.5 + 1.5 + 2 = 929.40 = Top of Pond (SMALLEST OVER)

930.7 - 929.4 = 1.30' OF COVER

929.4 - 2 = 927.4 SOFFIT OF POND

919.4 + 4.50 = 923.90 FL OF 88436"

~~923.55 + 4" = 923.88 FL OF 36" RCP~~

923.90 + 36" = 926.80 SOFFIT OF 36"RCP

923.90 + 4" = 927.23 TOP OF 36"RCP

927.23 < 927.4

919.4 + 6.5 = 925.90 Top of Water Elev in Pond = Weir Elev

925.90 - 923.96 = 2.00' ht of weir

Turner Collie & Braden Inc.
Engineers • Planners • Project Managers

COMPUTATION SHEET

SUBJECT US 183 System 2
Pond for C
JOB NO. 7207401022 SHEET NO. ____ OF ____
BY RAB DATE 5-5-98
CHKD BY ____ DATE ____

System 2C.

Area = 0.55 + 7.53 + 0.13 + 0.93 = 9.14 Ac

$WQV = (9.14)(43,560)(0.5)/12 = 16,589.10$ CF

$A_S = \frac{A_D H}{10} = (9.14)(43,560)(0.042)/10 = 1658.91$ SF (0.5")

$A_F = \frac{A_D H}{10} = (9.14)(43,560)(0.042)/18 = 921.62$ SF

$V_{FILT} = 0.2(WQV) = 0.2(16,589.10) = 3317.82$ CF

Actual

$V_{SED} = (30-11)(14.5+1)(6.5) + (30)(76)(6.5) = 16734.25$ CF

16734.25 > 16,589.10

$A_{SED} = \frac{1}{2}(15.5)(30) + 30(76) = 2574.5$ SF

2574.5 > 1658.91

$A_{FILT} = (31)(30) = 930$ SF

930 > 921.62

$V_{FILT} = (31)(30)(6.5) = 6045$ CF

6045 > 3317.82

Turner Collie & Braden Inc.
Engineers • Planners • Project Managers

COMPUTATION SHEET

SUBJECT US 183 Sec 1
System 2 Ponds
JOB NO. 7207401022 SHEET NO. ____ OF ____
BY RAB DATE 7/6/98
CHKD BY ____ DATE ____

35

POND 2D 1

POND DIMENSIONS

HT OVER WEIR = 1.5 FT

POND WIDTH = 30 FT.

TOTAL LENGTH = 179.33 FT

SPLITTER BOX = 12 FT. X 21 FT

DROP FROM SPLITTER BOX TO SED POND = 2.5 FT

SED POND LENGTH = 131 FT

FILTER POND LENGTH = 37 FT

POND DEPTH = 5.5 FT

TOP OF PROP DITCH = ~~929.0~~ 928.5

92~~9.0~~8.5 - ~~1.25~~ COVER - 2.5 = 925.~~25~~00

925.~~25~~00 - 1.5 = 923.~~75~~50

923.~~75~~50 - 5.5 = 918.~~25~~13 00

925.~~25~~00 - 4.5" - 42" = 921.~~38~~13

921.~~38~~13 - 918.~~25~~00 = 3.13

918.~~25~~00 + 0.13 = 918.~~38~~13 ~ ~~918.40~~

921.~~43~~63 - 0.5 = 920.~~93~~63 FL OF SB + 48" RCP

920.~~93~~63 + 4' = 924.~~93~~63 SOFFIT OF 48" RCP

924.~~93~~63 + 5" = ~~925.32~~ 925.05 TOP OF 48" RCP

~~925.32~~ 925.05 < 925.~~40~~13

918.~~40~~13 + 5.5 + 1.5 + 2.5 = 927.~~90~~63 → TOP OF POND

92~~9.0~~8.5 - 927.~~90~~63 = ~~1.10~~ 0.87 @ LOWEST FT OF DITCH OF COVER (SMALLEST)

927.~~90~~63 - 2.5 = 925.~~40~~13 SOFFIT OF POND

918.~~0~~13 + 2.5 = 920.~~90~~63 FL OF SB

921.~~40~~13 + 42" = 924.~~90~~63 SOFFIT OF 42" RCP

924.~~90~~63 + 4.5" = ~~925.23~~ 925.01 TOP OF 42" RCP

~~925.23~~ 925.01 < 925.~~40~~13

918.~~0~~13 + 5.5 = 923.~~90~~63 TOP OF WATER ELEV IN POND + WEIR EL

923.~~90~~63 - 920.~~90~~63 = 3' HT OF WEIR

923.63 - 920.53 = 3.1'

Turner Collie & Braden Inc.
Engineers • Planners • Project Managers

COMPUTATION SHEET

SUBJECT US 183 System 2
Pond for 2D1

JOB NO. 7207401022 SHEET NO. 1 OF ____

BY RAB DATE 5-3-98

CHKD BY ____ DATE ____

System
FROM 2D-1 TO 2D-16

Area = 1.44 + 0.214 + 1.55 + 0.37 + 0.54 + 1.91 + 0.32 + 0.45 + 0.36 + 1.91 + 1.92 = 10.984 ac

$WQV = (10.984)(43,560)(0.5")/12 = 19,935.96$ CF

$A_S = \frac{A_D H}{10} = (10.984)(43,560)(0.042)/10 = 1993.60$ SF

$A_F = \frac{A_D H}{18} = (10.984)(43,560)(0.042)/18 = 1107.55$ SF

$V_{FILT} = 0.2\ WQV = (0.2)(19,935.96) = 3987.19$ CF

ACTUAL

$V_{SED} = (30-13)(21+1)(5.5) + (109)(30)(5.5) = 20,042$ CF

17 22

$20,042 > 19,935.96$

$A_{SED} = 17(22) + 109(30) = 3644$ SF

$3644 > 1993.60$

$A_{FILT} = 37(30) = 1110$ SF

$1110 > 1107.55$

$V_{FIL} = 37(30)(5.5) = 6105.00$ CF

SUBJECT [illegible] NO. 849 P.21/22

SYSTEM 2 POND

JOB NO. 7207401022 SHEET NO. ____ OF ____

BY RAB DATE 7/6/98

CHKD BY ____ DATE ____

* Splitter Box width parallel to Pond length (Different from other Ponds

Rev 8/11/98

POND 2D 2

POND DIMENSIONS

HT OVER WEIR = 2 FT

POND WIDTH = 30 FT

TOTAL LENGTH = 209.33 FT

SPLITTER BOX = 12 FT X 21 FT

DROP FROM SPLITTER BOX TO SED POND = ~~1.5~~ 1 FT

SED POND LENGTH = 151 FT

FILTER POND LENGTH = 47 FT

POND DEPTH = 6 FT

TOP OF PROP DITCH = 927.5
@ LOWEST PT

FL OF 54" INTO SB = 916.85

921.85 - 916.85 = ~~4.5~~ 5 HT OF WEIR

916.85 - 1.~~5~~ = 915.~~85~~ 8 FL @ BEG SED POND

915.~~85~~ 8 + 6 = 921.~~85~~ 8 TOP OF WEIR

921.~~85~~ 8 + 2 = 923.85 SOFFIT OF POND/SB (Ht over Weir)

Ht of Weir = ~~4.5~~ 5

923.~~85~~ 8 + 2.5 = 92~~3.85~~ 6.3 TOP OF POND (TOP THICKNESS)

927.5 - 92~~3.85~~ 6.3 = 1.~~65~~ COVER @ LOWEST PT OF DITCH

916.85 + 54" = 921.35 SOFFIT OF 54" INTO SB

921.35 + 5.5" = 921.81 TOP OF 54" INTO SB

921.81 < 923.85

916.71 + 54" = 921.21 SOFFIT OF 54" OUT OF SB

921.21 + 5.5" = 921.67 TOP OF 54" OUT OF SB

921.67 < 923.85

Turner Collie & Braden Inc.
Engineers • Planners • Project Managers

COMPUTATION SHEET

SUBJECT US 183 SYSTEM 2
POND FOR D

JOB NO. 720740102 SHEET NO. ____ OF ____

BY RAB DATE 5-8-98

CHKD BY ____ DATE ____

SYSTEM 2D (2D-19 + 2D-28)

AREA= 3.63 + 0.15 + 1.31 + 4.00 + 3.22 + 1.63 = 13.94 Ac

$WQV = (13.94)(43,560)(0.5/12) = 25,301.10$ CF

$A_S = \frac{A_D H}{10} = (13.94)(43,560)(0.5/12)/10 = 2530.11$ SF

$A_F = \frac{A_D H}{18} = (13.94)(43,560)(0.5/12)/18 = 1405.62$ SF

$V_{FILT.} = 0.2\ WQV = (0.2)(25,301.10) = 5060.22$ CF

Actual

$V_{SED} = (30-22)(12+1)(1.6) + 138(30)(6) = 25,464$ CF

$25,464 > 25,301.10$

$A_S = 8(13) + (138)(30) = 4244$ SF

$4244 > 2530.11$

$A_F = 30(47)$ 1410 SF

$1410 > 1405.62$

$V_F = 30(47)(6) = 8460$ CF

$8640 > 5060.22$

TurnerCollie & Braden Inc.

Engineers • Planners • Project Managers

400 West 15th Street
Suite 500
Austin, Texas 78701
(512) 472-4519
Fax (512) 472-7519
E-Mail: tcbaus@io.com

TO: Sylvia Pope	FAX# 499-2846
FROM: Connie Bills	PHONE: 512-472-4519 FAX: 512-472-7519
DATE: 1/7/99	COVER + 8 PAGE(S)
REGARDING: 115183 Update Sys 5 - Woods Pond	

MESSAGE

Include are the Woods Pond (Wet Pond) Calculations.

Connie Bills

Turner Collie & Braden Inc.
Engineers • Planners • Project Managers

COMPUTATION SHEET

SUBJECT US 183 Sect 1 Update
WOODS TRACT POND
JOB NO. _____ SHEET NO. 1 OF _____
BY CDB DATE 6/11/98
CHKD BY _____ DATE _____

Check original calcs.

$V = 0.162 * R_f * DA$

IC Revised - DA's revised ≅ 55% I.C.
DA = 102.75 ac

$V = (0.162)(R_f)(102.75)$

R_f - COA pg 1-202 Table 1-9 Recharge zone
$R_f = 0.351$

V = 5.842 ac-ft — actual = 6.98 + 5.842 < ~~6.98~~ 7.29 plenty
.31
7.29

not including veg. bench

Sediment Forebay - 15-25% of perm vol
0.20 * 5.842 = 1.169 ac-ft < Actual 1.65 ac-ft

Veg. bench - 20% of Total pond area
Range from 10' to 20' wide
& slope 5 to 15%

22.67% of perm Vol.

Main Pool
vol = 5.842 - 1.169 = 4.674 ac-ft - including Veg. bench

Actual 25.68% of Total Area

VOLUME CALCULATIONS FOR SYSTEM 5 PONDS

WATER QUALITY CALCULATIONS
WOODS POND

11-Jun-98

MAIN POND

ELEV ft	AREA sf	VOLUME cf
914.82	55,399.01	
		44,084.18
914	52,123.37	
		50,288.96
913	48,454.54	
		46,726.62
912	44,998.70	
		43,362.60
911	41,726.50	
		40,170.95
910	38,615.39	
		37,131.56
909	35,647.73	
		30,086.99
908	24,526.25	
		12,263.12
907	0.00	
		304,114.97 CF

MAIN POND TOTAL excluding vegetative bench: 304,114.97 CF — 6.98 ac-ft

TOTAL WET POND AREA from ACAD: 106,338.84 SF

SEDIMENT FOREBAY

ELEV ft	AREA sf	VOLUME cf
914.82	23,631.84	
		18,569.38
914	21,659.27	
		20,479.94
913	19,300.60	
		18,236.84
912	17,173.08	
		3,046.15
911.82	16,673.07	
		11,716.64
911	11,904.10	

72,048.93 CF — 1.65 ac-ft

22.67% OF TOTAL VOLUME

VEGETATIVE BENCH

TOTAL AREA: 27,307.99 SF

25.68% OF TOTAL AREA

TOTAL VOLUME: 13,654.00 CF — 0.31 ac-ft

Turner Collie & Braden Inc.
Engineers • Planners • Project Managers

COMPUTATION SHEET

SUBJECT US 183 Sect 1 Update
WOODS TRACT POND
JOB NO. _____ SHEET NO. 1 OF 1
BY CDB DATE 5/28/98
CHKD BY _____ DATE _____

ORIGINAL CALCS

Wet Pond

$V = 0.162 * R_f * DA$

Table 4.9 pg 1-202 COA ENV'L Manual
- I.W/ 63.05% Impervious Cover
R_f = 0.401 to .453 Recharge

$\frac{.458 - .405}{.05} = \frac{.453 - x}{0.0195}$ $x = 0.434$

according to COA Environmental Manual
p. 1-169 – 1' C.I. can leave out WOODS property in WQ calcs because. WOODS will treat it

PERM POOL VOL.

$V = (0.162)(.434)(102.17) = 7.185$ ac-ft 312,908.78 CF

Permanent Pool 2 compartments
Sediment Forebay
Main Pool

SEDIMENT FOREBAY – 15% - 25% of permanent vol.
- 14'-6" deep
- vegetative benches (entire Perm Pool will have this)
- min 2% slope towards a low point
- reinforced conc. pad – 12' by 16'
- 12' conc. maintenance Ramp 4:1 leave at least 12" above perm pool elev to maintenance pad

use 0.20% as starting point
(0.20)(7.183) = 1.4366 ≈ 1.437 ac-ft

Turner Collie & Braden Inc.
Engineers • Planners • Project Managers

COMPUTATION SHEET

SUBJECT US 183 Sect 1 Update - Woods Tract Pond
JOB NO. _____ SHEET NO. 2 OF _____
BY CDB DATE 5/28/98
CHKD BY _____ DATE _____

consider vegetative bench 20% of the total pond area
min 10' wide
S = 5 to 15%
Max. inundation of 18"

if use 1.5'



want 20' wide

$\frac{1.5'}{20'}$ = 7.5% slope

use min 5% slope

(20)(.05) = 1'

SEE A TYPICAL X-SECTION OF POND page 3

FOR CONTOURING:
end of pond - detention elev

264

916 - (.30% × 60) = 915.82

915.82 - (5% × 20') = 914.82

even contour
915 - 914.82 = .18
× 20
3.6'

5% = 20:1

Main Pool vol = 7.183 − 1.437 = 5.746 ac-ft - includes veg. bench

Turner Collie & Braden Inc.
Engineers • Planners • Project Managers

COMPUTATION SHEET

SUBJECT _____

JOB NO. _____ SHEET NO. 3 OF _____

BY _____ DATE 5/28/99

CHKD BY _____ DATE _____

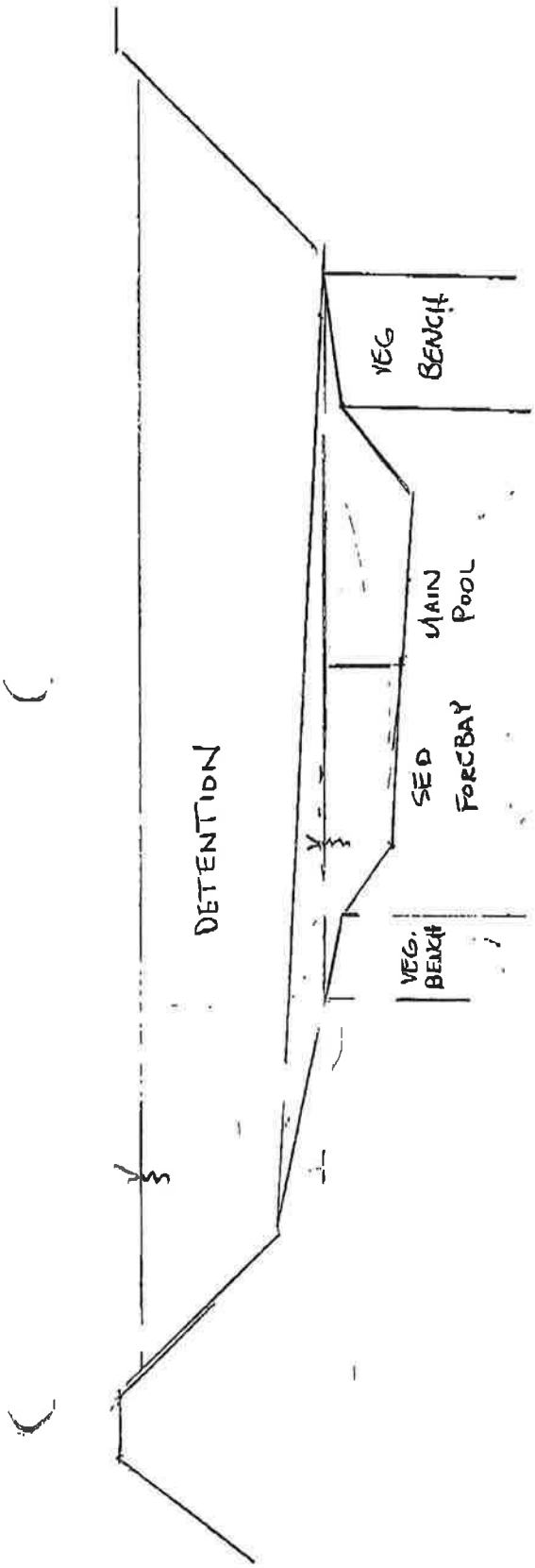

Turner Collie & Braden Inc.
Engineers • Planners • Project Managers

COMPUTATION SHEET

SUBJECT _____

JOB NO. _____ SHEET NO. 4 OF _____

BY _____ DATE 5/20/98

CHKD BY _____ DATE _____

Rough Est

Main Pool L≈ 277

So will drop 277 * .01 = 2.77' over length

don't want deeper than 8'

914.82 if start w/ 5' depth

5 to 7.65'

SEDIMENT FOREBAY

L= ?

1.437 ac-ft

5' Avg depth

0.2874 ac = 12,519 SF

if L = 120'

W= 104.325'

Outfall @ elev — 917.77

Slope @ 0.30% for 20'

917.77 - (20 * .30%) = 917.71

If use 20:1 917.71 - 914.82 = 2.89 = 57.8 ft

too long

Want flow to spread out.

use Slope @ 0.30% for 30' 917.77 - (30 * .30%) = 917.68

Slope 3:1 to 915.82 — 917.68 - 915.82 = 1.86

Turner Collie & Braden Inc.
Engineers • Planners • Project Managers

COMPUTATION SHEET

SUBJECT _____

JOB NO. _____ SHEET NO. 5 OF _____

BY _____ DATE 3/23/98

CHKD BY _____ DATE _____

SED FOREBAY CONT

3:1 slope to 2'-3'

if L=120

120 x .02 = 2.4' drop

begin w/ 3.32' 914.82 to 911.5. 3.32 x 3 = 9.96

want to put a slight curve in pond to make it more natural looking

& culvert 338.8138

Pond " 19.8569

2% slope all directions

down E of pond 911.5 - (120 x .02) = 909.1

need to have center steeper than 2%

need E = 908.8

$$\frac{911.5 - 908.8}{120} = 2.25\%$$

$$\frac{0.5}{2.25\%} = 22.22$$

$$\frac{1}{.0225} = 44.44$$

Turner Collie & Braden Inc.
Engineers • Planners • Project Managers

COMPUTATION SHEET

SUBJECT _____

JOB NO. _____ SHEET NO. 6 OF _____

BY _____ DATE 5/28/98

CHKD BY _____ DATE _____

Reverse Sod. Forbay

45'

use S = 0.30% for 15' - (Energy dissipators ect.)

918 - 917.77 = 0.23

3(.23) = 0.69

917.77 - (15 * .30%) = 917.73'

3:1 slope to veg. bench

917.73 - 915.82 = 1.91

1.91 * 3 = 5.73

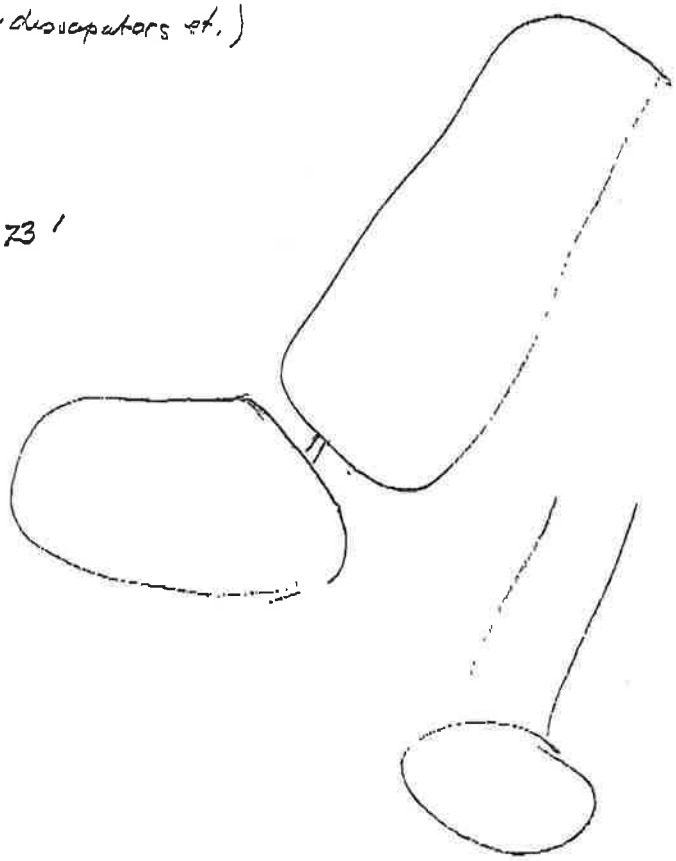

6/2/98

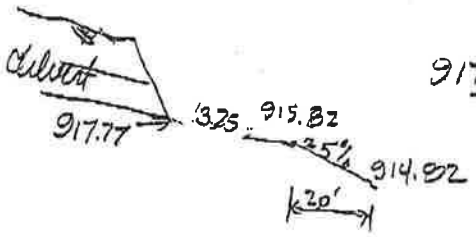

$\frac{917.77 - 915.82}{60} = 3.25\%$ 30.77 : 1

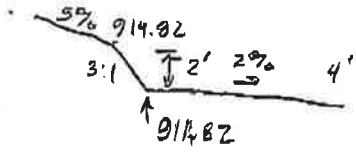

$\frac{911.82 - 911}{x} = .02$ $x = 41$

TurnerCollie & Braden Inc.
Engineers • Planners • Project Managers

400 West 15th Street
Suite 500
Austin, Texas 78701
(512) 472-4519
Fax (512) 472-7519
E-Mail: tcbaus@io.com

TO: Sylvia Pope	FAX# 499-2846
FROM: Connie Bills	PHONE: 512-472-4519 FAX: 512-472-7519
DATE: 1/7/99	COVER + 2 PAGE(S)
REGARDING: US 183 Sect 1 Updates	

MESSAGE

System 3 (Pond Springs Pond) calcs are included.

Connie Bills

Turner Collie & Braden Inc.
Engineers • Planners • Project Managers

COMPUTATION SHEET

SUBJECT VS183 WQPESYS3
POND AREA/VOLUME REQUIREMENTS
JOB NO. 72-0740102 SHEET NO. 5 OF ____
BY KKy DATE 9-24-97
CHKD BY ____ DATE ____

① REQUIRED WQV (See Spread sheet T:\0740102\POND\SV1-3da.XLS)

TOTAL ONSITE DRAINAGE AREA = 36.33 ~~Ac~~ ac

$$36.33 \text{ ac} \times \frac{43{,}560.2 \text{ ft}^2}{1 \text{ ac}} = 1{,}582{,}541.1 \text{ ft}^2$$

$$1{,}582{,}541.1 \text{ ft}^2 \times (1/2") \left(\frac{1 \text{ ft}}{12 \text{ in}}\right) = \boxed{65{,}939.2 \text{ ft}^3 = WQV}$$

② SIZE SEDIMENTATION BASIN (MINIMUM BOTTOM SURFACE AREA)

$$A_s = \frac{WQV}{10} = \frac{65{,}939.2}{10} = \boxed{6593.9 \text{ ft}^2 = A_s}$$

note: - This A_s also may include hazard material basin
- Depth must be min 3 ft & max 10 ft.
- Try to keep size 2:1 W or greater

③ SIZE FILTRATION BASIN (MINIMUM BOTTOM SURFACE AREA)

$$A_f = \frac{WQV}{18} = \frac{65{,}939.2}{18} = \boxed{3663.3 \text{ ft}^2 = A_f}$$

④ Volume of Sediment Basin must be greater to or equal to TOTAL WQV

$$V_s \geq WQV = (65{,}939.2 \text{ ft}^3)$$

⑤ Volume of Filtration Basin must be greater to or equal to 20% of TOTAL WQV

$$V_f \geq 0.20\, WQV = (13{,}187.84 \text{ ft}^3)$$

⑥ Volume of Hazardous Materials Trap = 10,000 gal = 1,336.8 ft^3

Turner Collie & Braden Inc.
Engineers • Planners • Project Managers

COMPUTATION SHEET

SUBJECT 45183 Sup 3
Pond Springs Pond
JOB NO. _____ SHEET NO. _____ OF _____
BY CDB DATE 10/21/98
CHKD BY _____ DATE _____

Pond Check - Revised some drainage areas

Orig. 36.33

Revised 35.82 ac - less than original So if actual numbers are greater than orig. than OK

	Actual	Required	
S.P.	66,257.44 CF	65,939.2 CF	WQV
	46639 SF	46593 SF	As
F.P.	46650 SF	36633 SF	Af
	40,675 CF	13,187.8 CF	1/2

Turner Collie & Braden Inc.
Engineers • Planners • Project Managers

400 West 15th Street
Suite 500
Austin, Texas 78701
(512) 472-4519
Fax (512) 472-7519
E-Mail: tcbaus@io.com

RECEIVED
JAN 15 1999
TNRCC-[illegible]
Austin Region 11

TO: Sylvia Pope	FAX# 499-2846
FROM: Connie Bills	PHONE: 512-472-4519 FAX: 512-472-7519
DATE: 1/7/99	COVER + 7 PAGE(S)
REGARDING:	

MESSAGE 1/7/99

Included are the D.A. maps and Impervious Cover calculations. I will get you the pond calcs later today.

Connie Bills

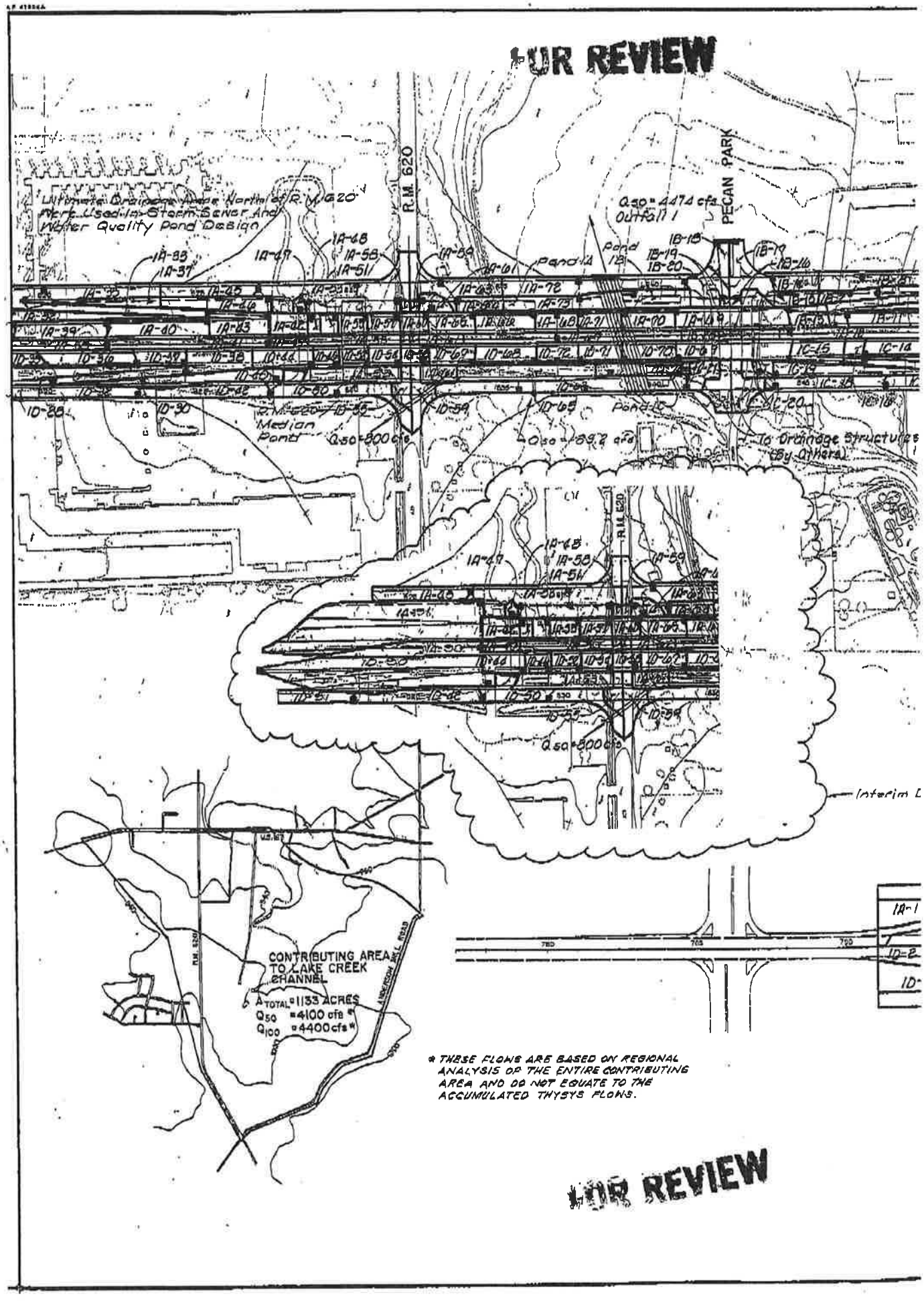
FOR REVIEW
R.M. 620
PECAN PARK
Ultimate Drainage Area North of R.M. 620 Used In Storm Sewer And Water Quality Pond Design
Pond A
Pond B
Q50 = 447.4 cfs
Outfall 1
Q50 = 800 cfs
Q50 = 89.7 cfs
To Drainage Structures By Others
Interim L
CONTRIBUTING AREA TO LAKE CREEK CHANNEL
A TOTAL = 1133 ACRES
Q50 = 4100 cfs *
Q100 = 4400 cfs *
* THESE FLOWS ARE BASED ON REGIONAL ANALYSIS OF THE ENTIRE CONTRIBUTING AREA AND DO NOT EQUATE TO THE ACCUMULATED THYSYS FLOWS.
FOR REVIEW

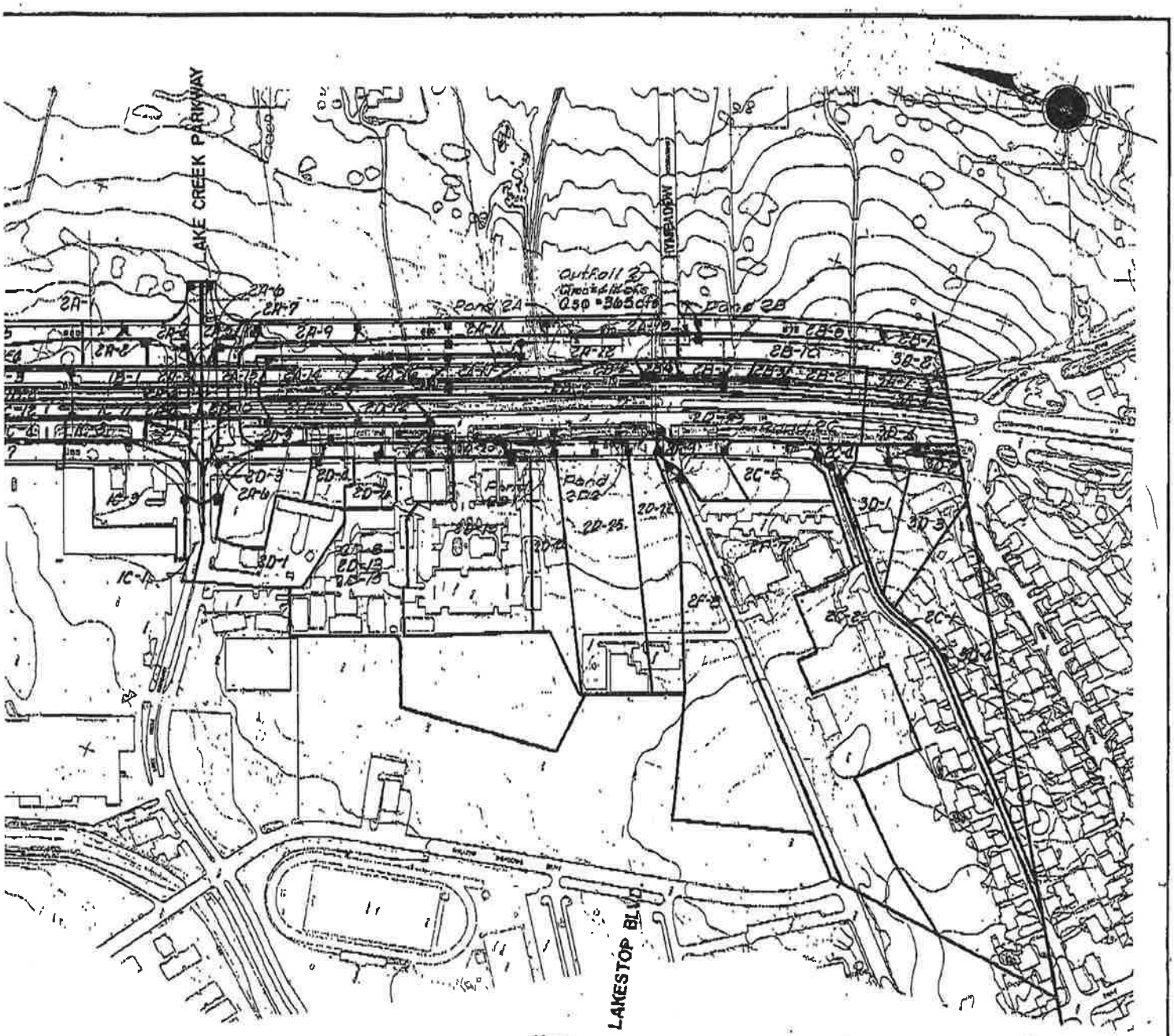

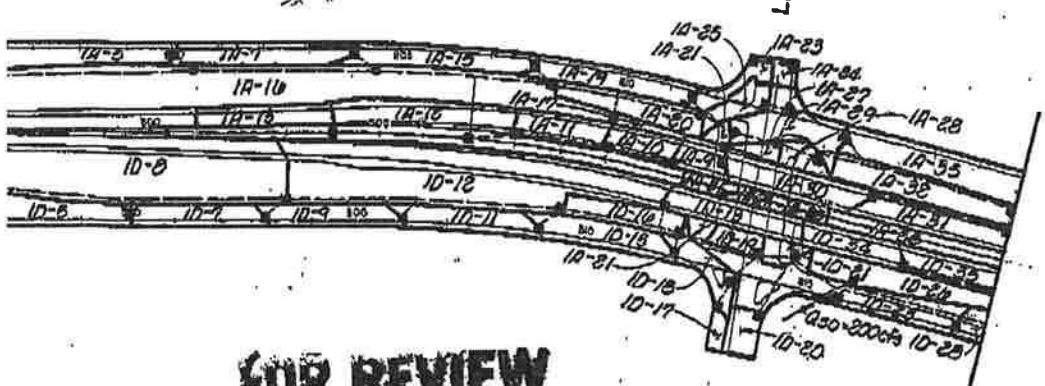

FOR REVIEW

NO.	DATE	REVISION	APPROV.
4			
3			
2			
1			

Turner Collie & Braden Inc.
CONSULTING ENGINEERS
TEXAS AUSTIN DALLAS HOUSTON SAN ANTONIO CORPUS CHRISTI

AUSTIN | JOB NO. 72-07401-022

STATE DEPARTMENT OF HIGHWAYS AND PUBLIC TRANSPORTATION

©1998 TxDOT

DRAINAGE AREA MAP

SCALE: 1" = 200' SHEET 1 OF 3

Designed DAN		STATE	FEDERAL AID PROJECT NO.			
Checked	6	TEXAS	F267(16)			U.S.183
Drawn WWS	STATE DIST. NO.	COUNTY	CONTROL NO.	SECTION NO.	JOB NO.	SHEET NO.
Checked DAN	14	WILLIAMSON	151	05	38	2/4a

STATE OF TEXAS
Robert W. Barnett
REGISTERED PROFESSIONAL ENGINEER

Robert W. Barnett
5-07-88

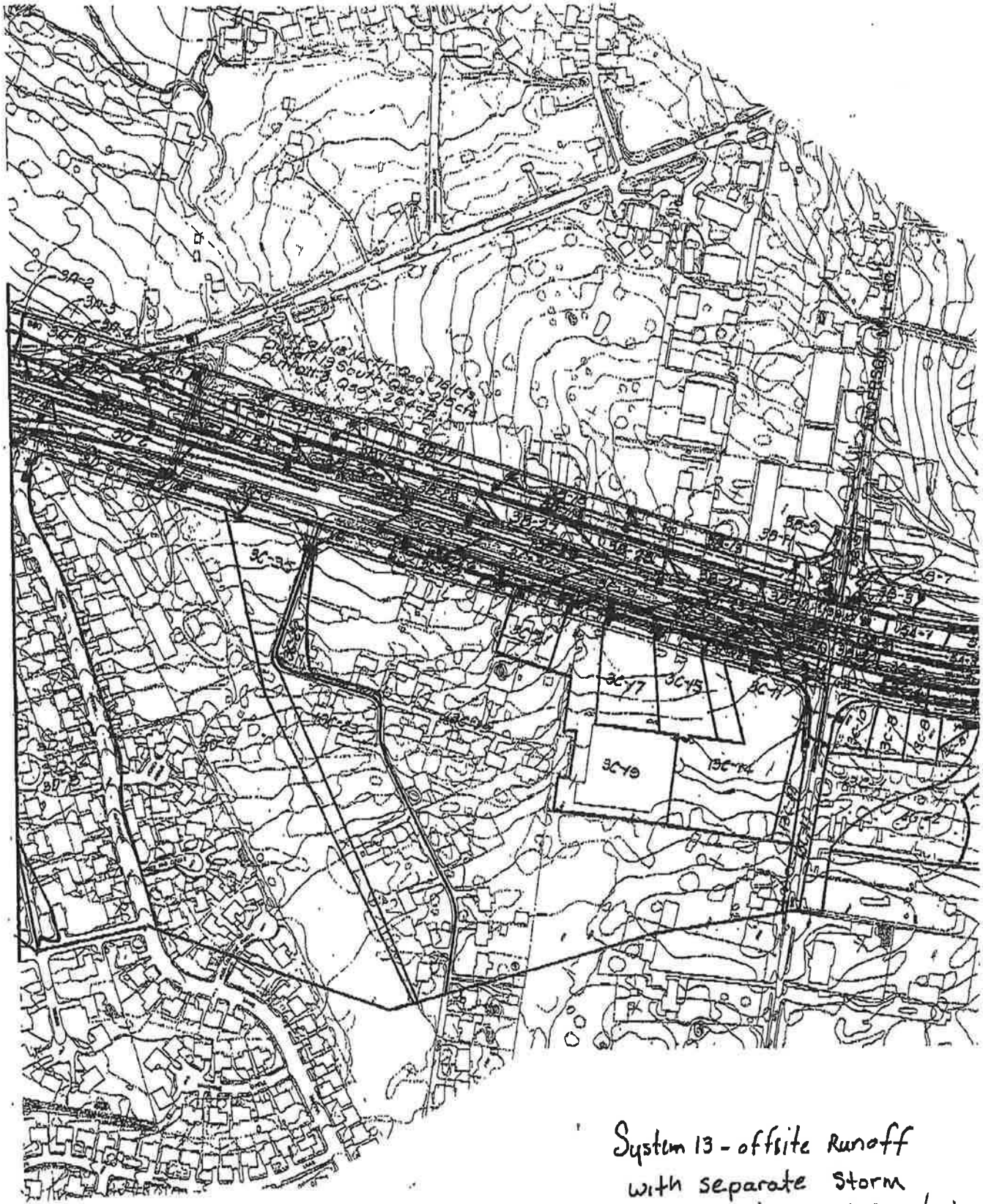

FOR REVIEW

System 13 - offsite Runoff with separate Storm Sewer System, Not entering ponds.

FOR REVIEW



System 4 is offsite runoff which is segregated to its own storm sewer system.

NO.	DATE	REVISION	APPROV.
4			
3			
2			
1			

Turner Collie & Braden Inc.
CONSULTING ENGINEERS
TEXAS AUSTIN INDIANAPOLIS HOUSTON PORT ARTHUR
COLORADO OKLAHOMA

OFFICE	JOB NO.	ASSIGNED
AUSTIN	72-07401-022	

STATE DEPARTMENT OF HIGHWAYS AND PUBLIC TRANSPORTATION

©1998 TxDOT

DRAINAGE AREA MAP

SCALE: 1"=200' SHEET 2 OF 8

DESIGNED DAN	FED. RD. DIV. NO.	STATE	FEDERAL AID PROJECT NO.				HIGHWAY NO.
DRAWN	6	TEXAS	F 257(16)				U.S. 183
CHECKED WWS	STATE DIST. NO.	COUNTY	CONTROL NO.	SECTION NO.	JOB NO.		SHEET NO.
QUANTITIES DAN	14	WILLIAMSON	161	05	38		264b

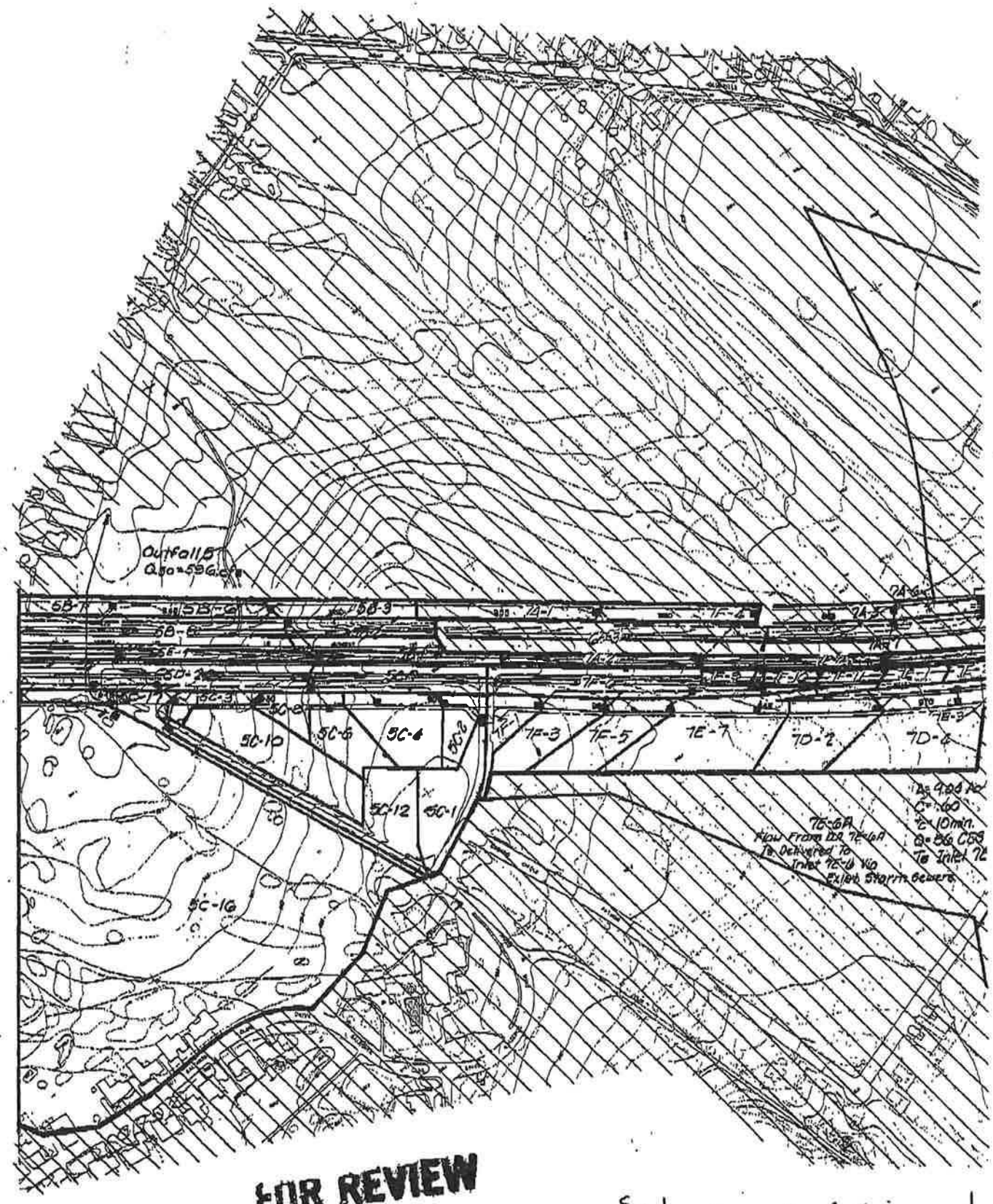

FOR REVIEW

System 7 part of Spicewood Springs WPAP submitted earlier. Around 1993-94.

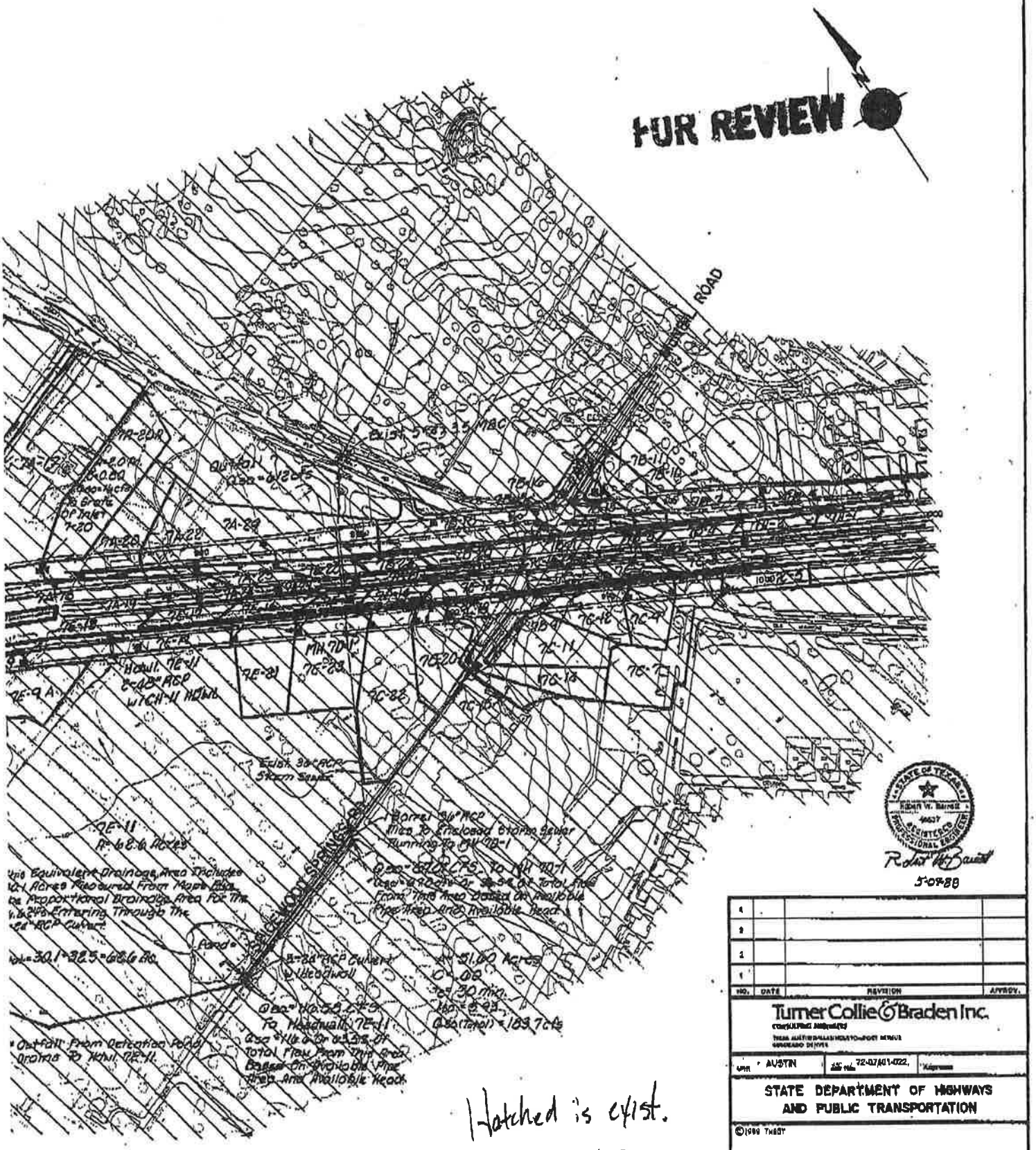
FOR REVIEW
ROAD
Exist. 36" RCP Storm Sewer
Barrel 36" RCP Inlet to Enclosed Storm Sewer Running to MH 7E-1
Pond
Outfall From Detention Pond Draining To Inlet 7E-11
Exist. 5-48" RCP
Exist. 3-48" RCP
Exist. 4-48" RCP
Exist. 3-48" RCP
Exist. 3-48" RCP
Exist. 3

US 183 UPDATE
TCB Job no. 72-07401-022

DRAINAGE AREAS ENTERING WATER QUALITY PONDS

7/8/98

	TOTAL AREA being treated	CITY OF AUSTIN AREA (offsite)	TxDOT AREA (onsite)	% COA AREA	% TxDOT AREA	COA IMPERVIOUS COVER	TxDOT IMPERVIOUS COVER	COMBINED IMPERVIOUS COVER FOR TREATED AREAS
	ac	ac	ac					
System 1 N	61.28	18.55	42.73	**30.27%**	**69.73%**	95.00%	68.87%	76.78%
System 1 S	14.44	1.05	13.39	**7.27%**	**92.73%**	95.00%	80.81%	81.84%
System 2	46.624	26.719	19.905	**57.31%**	**42.69%**	78.88%	65.42%	73.13%
System 3	35.815	8.314	27.501	**23.21%**	**76.79%**	90.38%	80.07%	82.46%
System 5	102.75	68.975	33.775	**67.13%**	**32.87%**	44.68%	77.17%	55.36%

JAN. 7.1999 9:13AM TURNER COLLIE BRADEN NO.848 P.8/8

9812010l ENTERED CLE

City of Austin

Founded by Congress, Republic of Texas, 1839
Municipal Building, Eighth at Colorado, P.O. Box 1088, Austin, Texas 78767 Telephone 512/499-200

January 8, 1999

TRANSMITTED VIA FAX

Ms. Patricia Reeh
Edwards Aquifer Protection Program
Austin Region Office
Texas Natural Resource Conservation Commission
1921 Cedar Bend, Suite 150
Austin, TX 78758

JAN 1 9 1999

TNRCC-Field Operations
Austin Region 11

Re: Application for Approval of Water Pollution Abatement Plan for TXDOT expansion of US Highway 183 from Fathom Circle to Lakeline Boulevard, Austin, Texas.

Dear Ms. Reeh:

Watershed Protection Department staff have reviewed the application for the above-referenced project. The site is within the Recharge Zone of the Northern Edwards Aquifer and is within the Lake Creek watershed. The following comments are submitted for your consideration.

1. The Water Pollution Abatement Plan (WPAP) did not contain detailed information regarding the location and construction of underground sedimentation/filtration basins and the design calculations for water quality control structures. Connie Bills of Turner, Collie & Braden Inc. provided this information upon our request. A copy of the additional information is provided as an attachment to this letter.

2. The storm water pollution prevention plan (SWPPP) states that excess dirt on the road shall be broomed as needed or as directed by the engineer. The brooming should be conducted with a vacuum broom that removes material rather than a power broom device in order to prevent runoff of residual sediment from the road surface.

3. The maintenance plan for stormwater controls that was included in the application is inappropriate for the underground sedimentation/filtration basins and the proposed wet pond due to the unique requirements for inspection and maintenance of these structures. Please require that TXDOT submit a maintenance plan and schedule specific to the underground sedimentation/filtration basins and a plan specific to the wet pond. We recommend that the structures be inspected monthly, following any rainfall with more than 1 inch of total accumulation, and immediately following the spill or any harmful substance that may have entered the stormsewer system. If a roadway spill occurs that results in a release to an underground sedimentation/filtration basin, then the basin chambers should be inspected and tested to determine if removal of the filtration material is warranted.

4. A device to capture trash should be placed at the inlet to the underground sedimentation/filtration basins. Accumulated debris and trash should be removed from these devices on a routine basis.

5. The wet pond design and sizing equations used appear to be appropriate for this type of water quality control structure.

6. The maintenance plan for the wet pond should include a description of vegetation maintenance, nuisance vegetation removal, provisions for providing make-up water in the event of drought, and a procedure describing how to measure accumulated sediment and determining when to remove it.

7. The sedimentation/filtration basins have been designed using the recommended capture rates proposed in the Draft TNRCC Technical Guidance Manual for Permanent Structural BMPs. According to the WPAP, the project capture volumes and load reductions meet or exceed the criteria for capture of the first one-half inch of stormwater runoff. The City of Austin commends TXDOT for being proactive in the design of the stormwater controls to comply with the adopted Edwards Rules but would like to suggest that TXDOT consider using sizing criteria presented in our Environmental Criteria Manual (ECM). These suggestions are as follows:

Water Quality Volume (WQV) for Sedimentation-Sand Filtration Systems – The WQV should increase by 0.10" for each 10% increase in impervious cover over 20%. The criteria currently being used for ponds in Austin is:

Impervious Cover	Water Quality Volume (inches)
≤ 20%	0.50
30%	0.60
40%	0.70
50%	0.80
60%	0.90
70%	1.00
80%	1.10
90%	1.20
100%	1.30

Based on a review of the drainage area information, volumes of between 0.85 and 1.15" would be more appropriate.

Sedimentation-Sand Filtration Surface Areas – When sizing the sedimentation and filtration basin surface areas, the equations referred to in the WPAP assume that all ponds will be of the "full" sedimentation-filtration design, which requires an extended detention outlet from the sedimentation pond to the filtration basin. If only a gabion wall is placed between the two, this is considered to be a "partial" sedimentation-filtration design, and a larger sand bed area is required (but the overall surface area of the system is not larger). For partial systems the sizing equations are:

$As = WQV * (1/Ds - 1/10)$
$Af = WQV/10$

Where:
As = surface area (square feet) of the sedimentation chamber (basin);
Af = surface area (square feet) of the filtration basin;
WQV = water quality volume (cubic feet); and
Ds = depth of the sedimentation chamber (basin) (feet).

These suggestions are presented in light of the high impervious cover noted for the project, recognizing that the TGM criteria would result in more frequent bypasses of untreated stormwater in this impervious cover range. Also, the Draft TGM has not received final approval by the TNRCC and therefore; the most protective approved criteria (COA ECM) is suggested.

8. The proposed wet pond in the vicinity of Roxie Drive is likely to intercept the water table under high rainfall conditions as indicated by recent construction problems encountered during construction of a wastewater line along Roxie Drive. The water table was located at a depth of approximately 12 feet below ground surface directly behind the Southwestern Bell building. A void horizon occurs at this depth and likely conveys flow laterally towards the Pond Springs area that occurs south of Anderson Mill Road east of the Turtle Rock area.

Thank you for the opportunity to review and comment on these plans. Please feel free to contact Sylvia Pope at 499 - 3429 or me at 499-2224 if you have any questions regarding these comments.

Sincerely,

Edward D. Peacock

Edward D. Peacock, P.E.
Section Manager, Water Resources Evaluation
Environmental Resources Management Division
Watershed Protection Department

cc: Central Files
Nancy L. McClintock, Division Manager, Environmental Resources Management
Sylvia Pope, Hydrogeologist, ERM, WRE
Pat Hartigan, ERM, Watershed Management
Chuck Lesniak, ERM, Water Quality Regulations

Turner Collie & Braden Inc.
Engineers • Planners • Project Managers

400 West 15th Street
Suite 500
Austin, Texas 78701
(512) 472-4519
Fax (512) 472-7519
E-Mail: tcbaus@io.com

RECEIVED
JAN 15 1999
TNRCC-Region
Austin Region

TO: Sylvia Pope	FAX# 499-2846
FROM: Connie Bills	PHONE: 512-472-4519 FAX: 512-472-7519
DATE: 1/6/99	COVER + __ PAGE(S)
REGARDING: US 183 Water Quality Ponds	

MESSAGE 1/6/99

The water quality ponds which are underground are labeled as Lakecreek 1A, 1B, and 1C and Hymeadow 2A, 2B, 2C, 2D1 and 2D2. So there are a total of 8 ponds underground situated between the main lanes and frontage roads. I have included some structural details showing the maintenance access hatch for these ponds. As far as the maintence sheed schedule, Gary Lantrip included TXDOT's standard schedule. Because these structures are unique and innovative TXDOT will adjust their Inspection and Maintenance as necessary to accomodate them. If you have questions concerning this, please call Gary. Construction of these facilities will include excavation similar to that required for box culverts and manholes, etc., Saw-cutting if necessary, no blasting. Forms will be put in place and the structures will be poured in place. These structures are similar to a large box culvert with columns in center to support the lid.

Turner Collie & Braden Inc.

Engineers • Planners • Project Managers

400 West 15th Street
Suite 500
Austin, Texas 78701
(512) 472-4519
Fax (512) 472-7519
E-Mail: tcbaus@io.com

TO:	FAX#
FROM:	PHONE: 512-472-4519 FAX: 512-472-7519
DATE:	COVER + __ PAGE(S)
REGARDING: pg 2	

MESSAGE 1/6/99

The wet pond labeled as the Woods Pond is at elevation 906' at its deepest point. This puts the FL approximately 14' below existing natural ground. If you have any questions, please call

Connie Bell

NOT FOR CONSTRUCTION

1/6/99

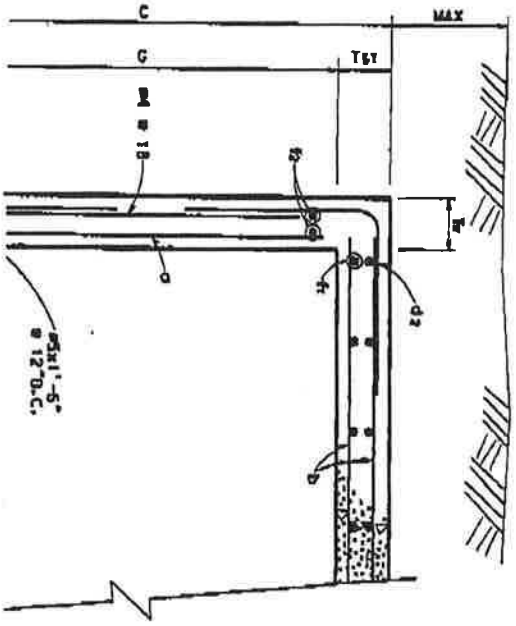

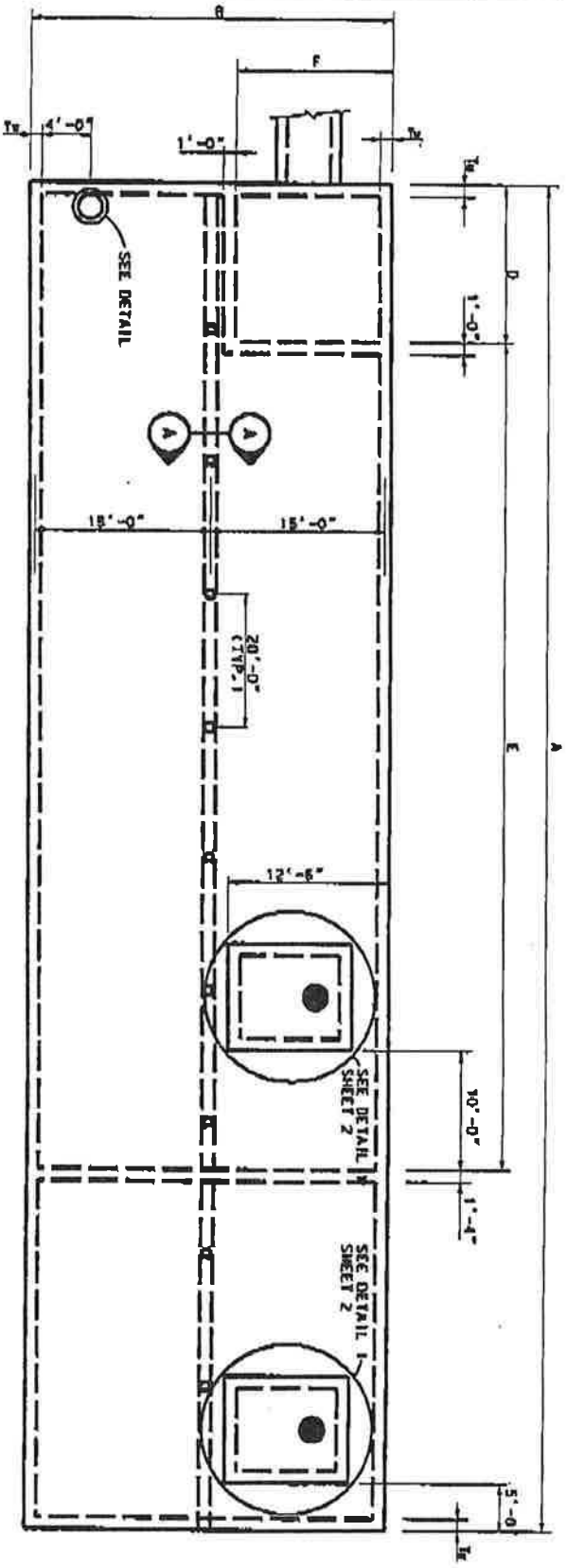

UNDERGROUND POND PLAN

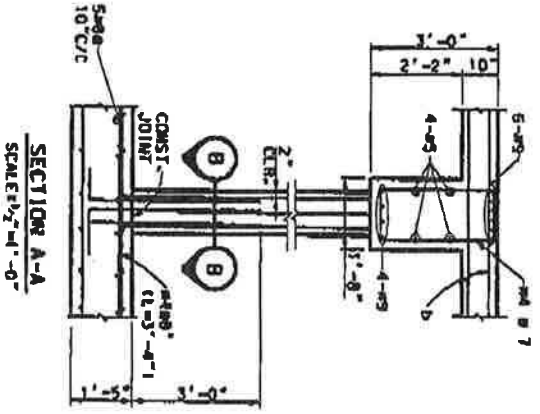

SECTION A-A
SCALE: 3/4"=1'-0"

FOR REVIEW

ESTIMATED QUANTITIES OF REINFORCING FOR COLUMNS AND BEAM					
POND DESIGNATION	#4 (LBS)	#5 (LBS)	#6 (LBS)	#7 (LBS)	#8 (LBS)
1A	855	669	1,383	5,451	
1B	688	537	1,106	4,380	
1C	635	496	1,041	4,040	
2A	730	617	1,185	5,026	
2B	459	366	609	2,981	

REINFORCING LA		
BAR SIZE	TOP BARS	MIN LAP
4	24"	
5	30"	
6	36"	
8	58"	

POND DESIGN	
1A	
1B	
1C	
2A	
2B	
2C	
2D	
2E	
2F	
2G	
2H	
2I	
2J	
2K	
2L	
2M	
2N	
2O	
2P	
2Q	
2R	
2S	
2T	
2U	
2V	
2W	
2X	
2Y	
2Z	

NOT FOR CONSTRUCTION

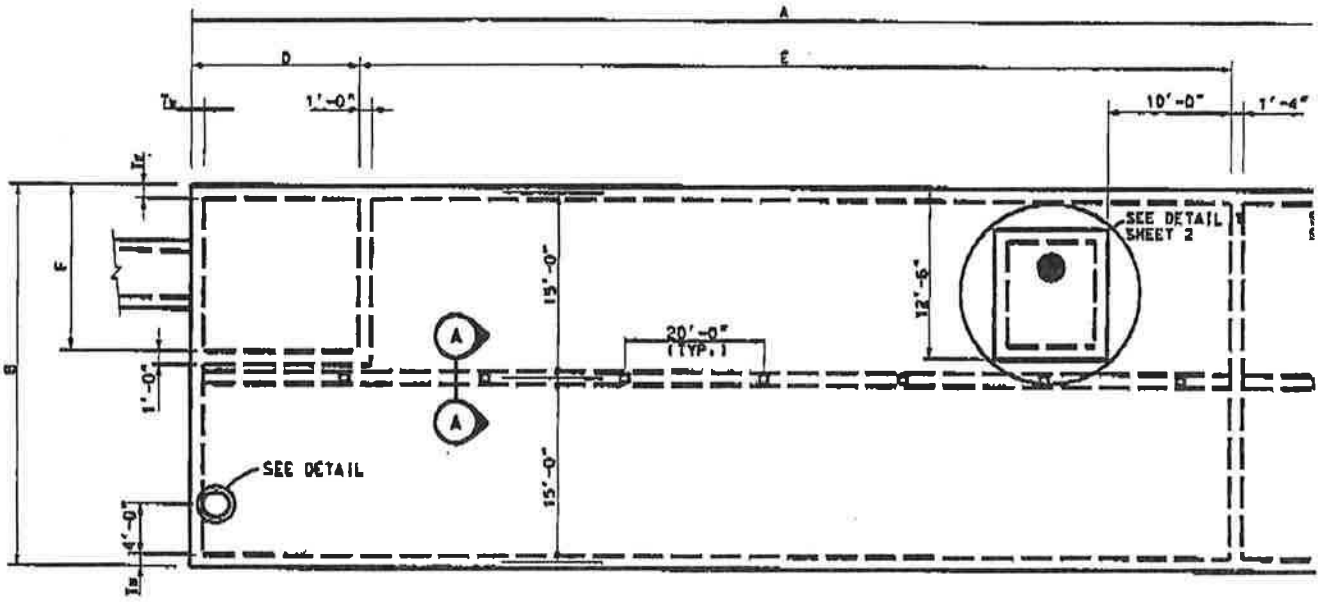

UNDERGROUND POND PLAN

FOR REVIEW

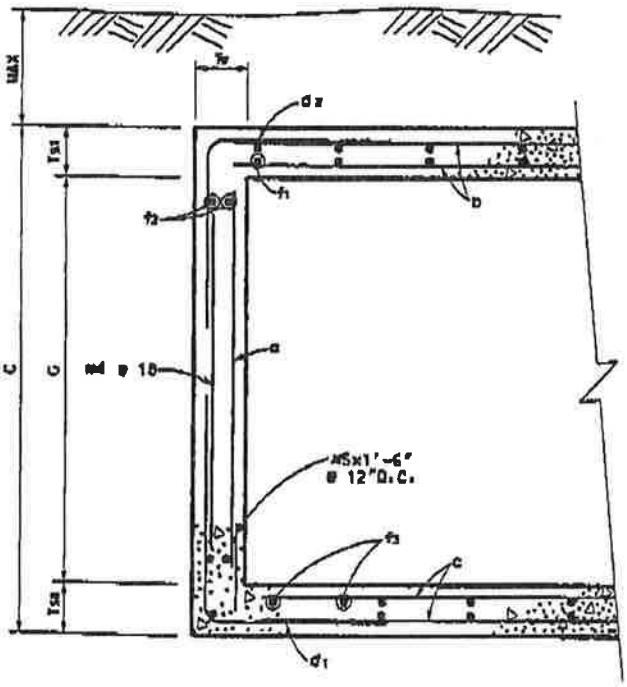

TYPICAL SECTION

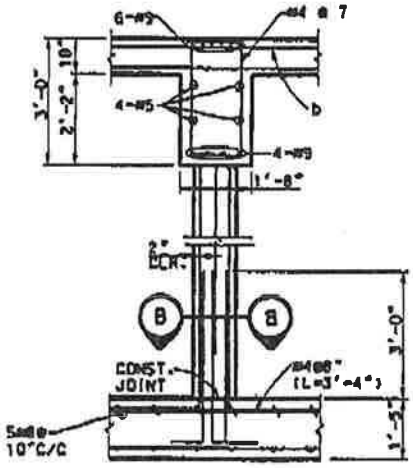

SECTION A-A
SCALE: 1/4"=1'-0"

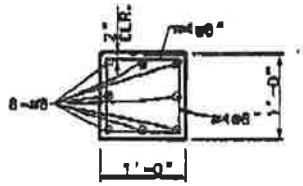

SECTION B-B
SCALE: 1"=1'-0"

1/6/99

NOT FOR CONSTRUCTION

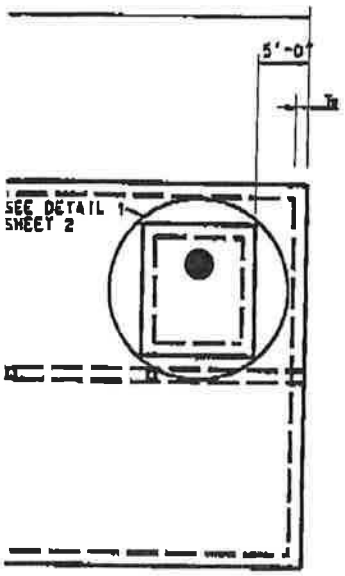

UNDERGROUND POND REINFORCING TABLE

POND DESIGNATION	BARS a		BARS b		BARS c		BARS d1		BARS d2		BARS f1 , f2 , f3 (#4)		
	SIZE	SPACING	SIZE	SPACING	SIZE	SPACING	SIZE	SPACING	SIZE	SPACING	f1 Spa.	f2 Spa.	f3 Spa.
1A	#6	@12"	#6	@6"	#8	@10"	#5	@12"	#5	@12"	@6"	@12"	@7"
1B	#6	@12"	#6	@6"	#8	@10"	#5	@12"	#5	@12"	@6"	@12"	@7"
1C	#6	@12"	#6	@6"	#8	@10"	#6	@12"	#5	@12"	@6"	@12"	@7"
2A	#6	@12"	#6	@6"	#8	@10"	#5	@12"	#5	@12"	@6"	@12"	@7"
2B	#6	@12"	#6	@6"	#8	@10"	#6	@12"	#5	@12"	@6"	@12"	@7"
2C	#6	@12"	#6	@6"	#8	@10"	#6	@12"	#5	@12"	@6"	@12"	@7"
2D1	#6	@12"	#6	@6"	#8	@10"	#6	@12"	#5	@12"	@6"	@12"	@7"
2D2	#6	@12"	#6	@6"	#8	@10"	#6	@12"	#5	@12"	@6"	@12"	@7"

UNDERGROUND POND DIMENSION TABLE

POND DESIGNATION	A	B	C	D	E	F	G	Tw	Ts1	Ts2	MAX FILL *
1A	160'-4"	32'-0"	9'-3"	22'-0"	97'-0"	19'-0"	7'-0"	1'-0"	10"	1'-5"	2'-3"
1B	126'-10"	32'-0"	9'-3"	15'-6"	77'-0"	11'-0"	7'-0"	1'-0"	10"	1'-5"	3'-6"
1C	118'-10"	32'-0"	9'-3"	15'-6"	81'-6"	11'-0"	7'-6"	1'-0"	10"	1'-5"	1'-9"
2A	147'-10"	32'-0"	9'-3"	15'-6"	92'-0"	11'-0"	7'-0"	1'-0"	10"	1'-5"	6'-7"
2B	87'-8"	32'-0"	9'-6"	15'-7 1/16"	44'-4"	11'-0"	7'-0"	1'-0"	10"	1'-5"	5'-6"
2C	134'-0"	32'-0"	10'-3"	15'-4 11/16"	91'-3 3/8"	11'-0"	8'-0"	1'-0"	10"	1'-5"	3'-4"
2D1	161'-4"	32'-0"	10'-3"	22'-0"	110'-0"	13'-0"	8'-0"	1'-0"	10"	1'-5"	4'-4"
2D2	211'-4"	32'-0"	10'-3"	13'-1/8"	103'-3"	22'-0"	8'-0"	1'-0"	10"	1'-5"	5'-4"

*AVERAGE FILL HEIGHT

REINFORCING LAP SPLICE & EMBEDMENT SCHEDULE

BAR SIZE	MIN LAP LENGTH		MIN EMBEDMENT LENGTH			
	TOP BARS	OTHER BARS	TOP BARS		OTHER BARS	
			STR.	STD. HOOK	STR.	STD. HOOK
4	24"	20"	17"	9"	12"	7"
5	30"	24"	21"	10"	15"	8"
6	36"	28"	25"	10"	18"	8"
8	58"	41"	42"	15"	30"	12"

GENERAL NOTES:

1. DESIGNED ACCORDING TO CURRENT AASHTO 1996 STANDARD SPECIFICATIONS.
2. DESIGNED FOR HS20 LOADING AND TO THE MAXIMUM FILL HEIGHT SHOWN.
3. ALL REINFORCING SHALL BE GRADE 60 KSI.
4. ALL CONCRETE SHALL HAVE A MINIMUM 28 DAY COMPRESSIVE STRENGTH OF 3000 PSI.
5. REINFORCING BARS SHALL BE ADJUSTED TO PROVIDE A MINIMUM OF 1½" CLEAR COVER.
6. ALL DIMENSIONS ARE IN FEET AND INCHES AND ALL MASS IS IN POUNDS UNLESS OTHERWISE NOTED.

ESTIMATED QUANTITIES OF REINFORCING FOR COLUMNS AND BEAM

POND DESIGNATION	#4 (LBS)	#5 (LBS)	#8 (LBS)	#9 (LBS)
1A	855	669	1,383	5,451
1B	688	537	1,186	4,380
1C	535	496	1,041	4,040
2A	790	617	1,185	5,026
2B	468	366	609	2,981
2C	715	559	1,314	4,556
2D1	968	757	1,752	6,165
2D2	1,129	882	1,970	7,185

ESTIMATED QUANTITIES

POND DESIGNATION	TOP SLAB CONC. (CY)	BOTT. SLAB CONC. (CY)	REIN. CONC WALLS (CY)
1A	158	158	107.9
1B	152.7	152.7	91.6
1C	140.8	140.8	92.6
2A	175.2	175.2	101.4
2B	68.8	68.8	70.3
2C	158.8	158.8	107.7
2D1	214.9	214.9	135.8
2D2	250.5	250.5	153.5

FOR REVIEW

DOCUMENT IS FOR INTERIM REVIEW AND NOT INTENDED FOR CONSTRUCTION, BIDDING, OR PERMIT PURPOSES

WALLY N. BURNS, P.E.

44162
TEXAS SERIAL NO.

01/04/99
DATE

UCHOTL1.DGN

Turner Collie & Braden Inc.
Engineers • Planners • Project Managers

SUITE

© 1998 Texas Department of Transportation

US 183

WATER QUALITY PONDS
STRUCTURAL DETAILS

SHEET 5 OF 5

DIST	COUNTY	SHEET NO.
18	WILLIAMSON	345

1/6/99

For Maintence
Top will be
lifted off
+ a bobcat
lowered
into pond.
Conner B.

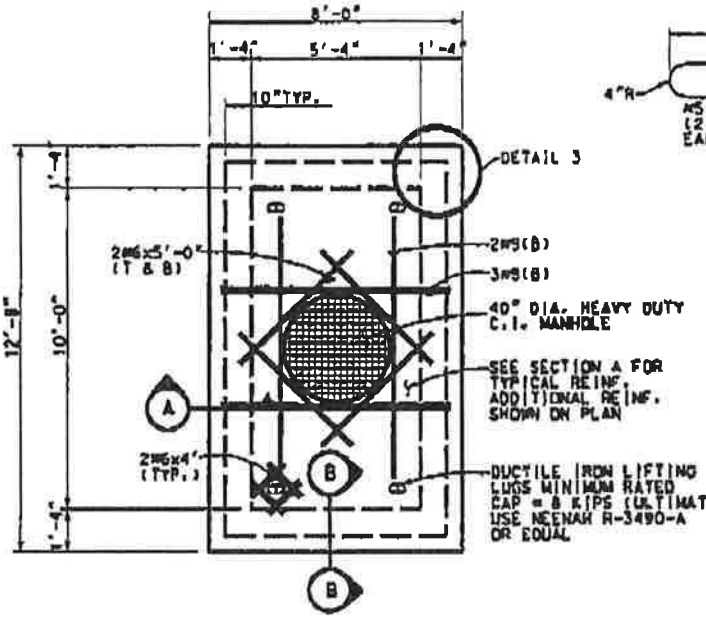

MAINTENANCE ACCESS HATCH

DETAIL 1

SCALE: 3/8" = 1'-0"

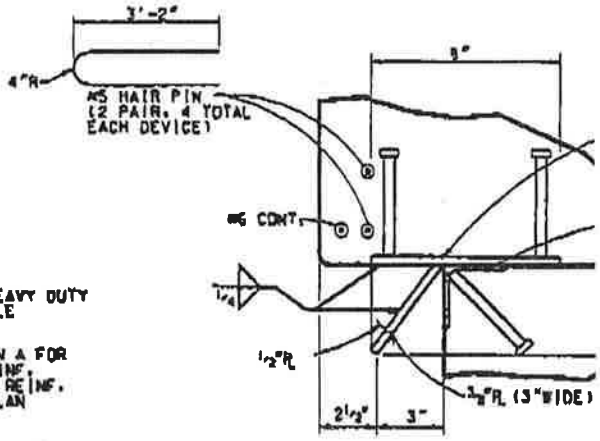

PROVIDE 8 DEVICES (GALV. AFTER FABRICATI 2 EACH SIDE

DETAIL 2

ALIGNMENT DEVICE

SCALE: 3" = 1'-0"

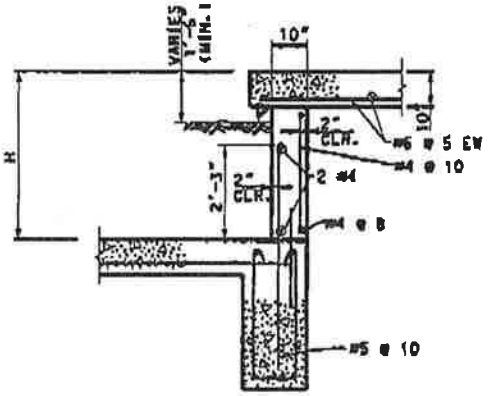

SECTION A

SCALE: 1 1/2" = 1'-0"

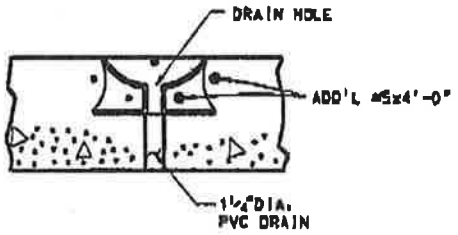

SECTION B

SCALE: 1" = 1'-0"

NOT FOR CONSTRUCTION

FOR REVIEW

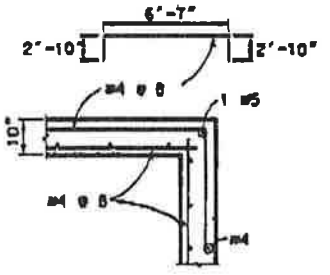

DETAIL 3

HORIZONTAL REINFORCEMENT

SCALE: 1/2" = 1'-0"

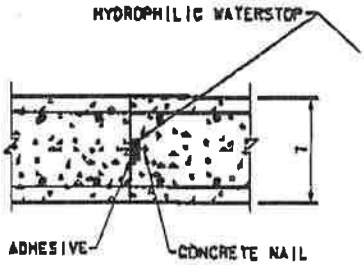

SLABS

1/6/99

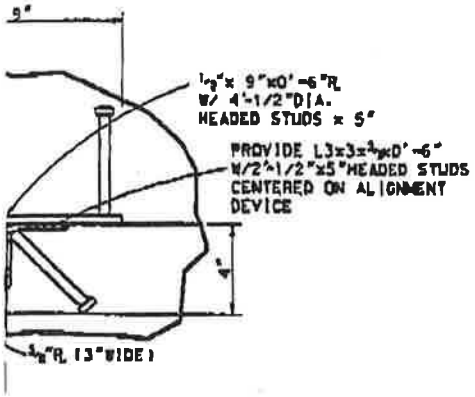

: 8 DEVICES
AFTER FABRICATION)
SIDE

AIL 2

NT DEVICE
3" = 1'-0"

FOR REVIEW

NOT FOR CONSTRUCTION

GENERAL NOTES:

1. DESIGNED ACCORDING TO CURRENT AASHTO 1996 STANDARD SPECIFICATIONS.
2. DESIGNED FOR HS20 LOADING AND TO THE MAXIMUM FILL HEIGHT SHOWN.
3. ALL REINFORCING SHALL BE GRADE 60 KSI.
4. ALL CONCRETE SHALL HAVE A MINIMUM 28 DAY COMPRESSIVE STRENGTH OF 3000 PSI.
5. REINFORCING BARS SHALL BE ADJUSTED TO PROVIDE A MINIMUM OF 1 1/2" CLEAR COVER.
6. ALL DIMENSIONS ARE IN FEET AND INCHES AND ALL MASS IS IN POUNDS UNLESS OTHERWISE NOTED.

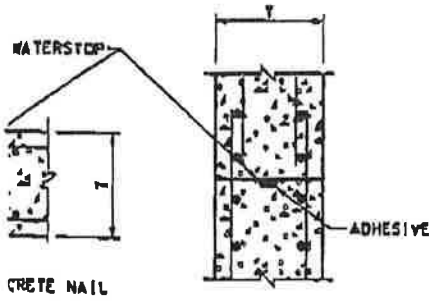

WALLS

DOCUMENT IS FOR INTERIM REVIEW AND NOT INTENDED FOR CONSTRUCTION, BIDDING, OR PERMIT PURPOSES

WALLY R. BURNS, P.E.

44162
TEXAS SERIAL NO.

01/04/99
DATE

Turner Collie & Braden Inc.
Engineers • Planners • Project Managers

SUTTON 82-14004-011

© 1998 Texas Department of Transportation

US 183
WATER QUALITY PONDS
STRUCTURAL DETAILS

SCALE: AS NOTED SHEET 2 OF 5

	STATE	FEDERAL AID PROJECT NO.	
6	TEXAS	FOST(16)	US 183

STATE DIST. NO.	COUNTY				
14	WILLIAMSON	151	9	38	246

MDP072.DGN

Texas Department of Transportation

P.O. DRAWER 15426 • AUSTIN, TEXAS 78761-5426 • (512) 832-7000

December 1, 1998

Ms. Christine Connor
Texas Natural Resource Conservation Commission
Region 11
1921 Cedar Bend, Ste. 150
Austin, Texas 78758-5336

Dear Ms. Connor:

TRANSMITTAL of WPAP - US 183, Main Lanes, Frontage, and Drainage improvements.

Four copies of the WPAP for the above are attached. Originally it was planned to first do the offsite drainage work near the Woods Fun Center, (just north of Hunter's Chase), and submit the roadway work later. That was changed. This WPAP represents the entire project. Since it is a rather large project, there may be other data, calculations, plan sheets, etc. not included within this application that would be helpful for your review. Contact me if additional information is needed.

Sincerely,

J. Gary Lantrip, District Geologist

Attachments: 4 WPAPs

cc: TxDOT ENV

An Equal Opportunity Employer

Texas Department of Transportation

P.O. DRAWER 15426 • AUSTIN, TEXAS 78761-5426 • (512) 832-7000

April 14, 1999

RECEIVED
APR 20 1999
TNRCC Field Operations
Austin Region 11

Ms. Christine Connor
Edwards Aquifer Protection Program
TNRCC Field Operations, Region 11
1921 Cedar Bend Drive, Suite #150
Austin, Texas 78758-5336

Re: Edwards Aquifer Project Program
File No. 98120101

Dear Ms. Connor:

The Texas Department of Transportation is scheduled to begin construction of Drainage Improvement at Woods Property, north of Hunters Chase. This job is scheduled to begin on April 15, 1999.

Please contact Bruce Thurin at 388-3885 if you have any questions regarding this project.

Sincerely,

John A. Roberts, P.E.
Area Engineer

BT/ca
c: Bruce Thurin

ENTERED
4/16/99

Texas Department of Transportation

P.O. DRAWER 15426 • AUSTIN, TEXAS 78761-5426 • (512) 832-7000

April 14, 1999

Ms. Christine Connor
Edwards Aquifer Protection Program
TNRCC Field Operations, Region 11
1921 Cedar Bend Drive, Suite #150
Austin, Texas 78758-5336

Re: Edwards Aquifer Project Program
File No. 98120101

Dear Ms. Connor:

The Texas Department of Transportation is scheduled to begin construction of Drainage Improvement at Woods Property, north of Hunters Chase. This job is scheduled to begin on April 15, 1999.

Please contact Bruce Thurin at 388-3885 if you have any questions regarding this project.

Sincerely,

John A. Roberts, P.E.
Area Engineer

BT/ca
c: Bruce Thurin

Texas Commission on Environmental Q

COPY

Investigation Report

TEXAS DEPARTMENT OF TRANSPORTATION

CN600803456

US 183 MAINLANES FRONTAGE DRAINAGE IMPROVEMENTS

RN102756582

Investigation # 743699 **Incident #**

Investigator: ZACH LANFEAR **Site Classification** COMMERCIAL

Conducted: 04/09/2009 -- 04/09/2009 **NAIC Code:** 237310

Program(s): EDWARDS AQUIFER

Investigation Type : Compliance Investigation **Location :** US 183 FATHOM CIRCLE & LAKELINE BLVD

Additional ID(s) : 11-98120101

Address: ; , **Activity Type :** REGION 11 - AUSTIN
EAPPNGRTRC - EAPP Non-Grant Recon

Principal(s) :

Role	Name
RESPONDENT	TEXAS DEPARTMENT OF TRANSPORTATION

Contact(s) :

Role	Title	Name	Phone	
Regulated Entity Contact	DISTRICT EROSION CONTROL COORDINATOR	MR BILLY BENNINGFIELD	Work	(512) 832-7348
Regulated Entity Mail Contact	AREA ENGINEER	MR JOHN R WAGNER PE	Work	(512) 930-5402

Other Staff Member(s) :

Role	Name
Supervisor	HEATHER BEATTY
Supervisor	CAROLYN RUNYON

Associated Check List

Checklist Name	Unit Name
GENERIC OTHER ISSUES AND/OR VIOLATIONS	Recharge Zone

Investigation Comments :

INTRODUCTION
On April 9, 2009, a reconnaissance investigation was conducted at the Texas Department of Transportation (TxDOT) owned and operated sedimentation/filtration water quality pond. No violations were alleged as a result of the investigation.

BACKGROUND
The subject water quality pond was approved under the US 183 Mainlanes, Frontage Roads and Drainage Improvements Water Pollution Abatement Plan (WPAP) by letter dated January 14, 1999 (EAPP File No. 11-98120101).

A compliance investigation was conducted on October 3 and 10, 2005, and two (2) violations were alleged. The first was for failure to maintain the sand filter and the second was for an unauthorized discharge. The violations were resolved on December 7 and 12, 2005, respectively. See investigation No. 433641.

GENERAL FACILITY AND PROCESS INFORMATION
The project is located in the Edwards Aquifer Recharge Zone. The 171.7 acre project has 144.2 acres of impervious cover (84%). A Notice of Construction was received on April 20, 1999. The subject water quality pond is identified as "sed/fil Pond 3" in the approved WPAP.

INVESTIGATION
On April 9, 2009, Mr. Zach Lanfear (the writer) with the TCEQ Austin Region Office was conducting a routine site assessment investigation for an unrelated project (Pond Springs Road WPAP (Investigation No. 743919, EAPP ID No. 11-09030301). The Pond Springs Road project is located directly adjacent to the subject pond. During the investigation I noticed the subject pond had an accumulation of trash, debris and black colored water, and had an unpleasant odor (see attached TCEQ Image Documentation, Attachment A). The stagnant odor indicated the water had been in the pond for some time.

On April 10, 2009, precipitation data was gathered from the National Weather Service and the City of Austin (see Attachment B). The data indicated that the last measurable rainfall event occurred on April 2, 2009; seven (7) days earlier than the April 9, 2009, investigation. Sedimentation/filtration water quality ponds are designed to drain from full within 24 hours and no later than 48 hours.

On March 7, 2009, a TCEQ Exit Interview Form (see Attachment C) was e-mailed to Mr. Billy Benningfield with TxDOT. The form identified an alleged violation for failure to maintain the water quality pond. The form also requested inspection records for the pond for the past 12 months. In the same e-mail, I requested: (1) that the cause of failure be identified, (2) the pond be maintained, (3) photos of the maintained pond and (4) monitoring of the pond after the next rainfall event.

On March 26, 2009, documentation was received from Mr. Benningfield via e-mail. In the e-mail, Mr. Benningfield stated the filtration pond had formed a crust of silt preventing drainage, on May 15, 2009, two (2) inches of silt saturated sand was removed and taken to a landfill and the pond was observed on May 19, 2009, after the two (2) inch rain event on May 16, 2009, and the pond had drained.

The e-mail also contained two (2) labeled images of the subject pond with sediment removed from the filtration area. The e-mail also contained an attachment of inspection and maintenance records beginning November 3, 2008, and ending March 19, 2009. The inspection and maintenance records appear to show that the respondent had inspected and maintained the pond as necessary once per month since November 2008. Since the pond was inspected monthly in accordance with the approved plan (see "The Inspection and Maintenance of Permanent Water Quality Control Devices" document in EAPP File No. 11-98120101") and since corrective action was taken to maintain the pond in a timely manner, no violation is alleged.

"The Inspection and Maintenance of Permanent Water Quality Control Devices" document also states that, " In addition to monthly inspections, an inspection will occur on the first working day, or as soon as practical after any rainfall event that may impact the system." This requirement will be reiterated as an additional issue.

CONCLUSION
A reconnaissance investigation conducted on April 9, 2009, documented a TxDOT owned and operated sedimentation/filtration water quality pond that appeared to not be draining. Failure to drain within 48 hours was confirmed with rainfall data. TxDOT took correction action and the pond was maintained on March 15, 2009. Inspection and maintenance records submitted by the respondent indicated that inspection and maintenance was being performed monthly for the past 6 months. Therefore, no violation was alleged and a general compliance letter dated June 8, 2009, was sent to

the responsible party.

No Violations Associated to this Investigation

Additional Issues

Description	Additional Comments
Item #1	The TCEQ would like to reiterate that the "The Inspection and Maintenance of Permanent Water Quality Control Devices" document approved under US 183 Mainlanes, Frontage Roads and Drainage Improvements Water Pollution Abatement Plan (EAPP File No. 11-98120101) states, "In addition to monthly inspections, an inspection will occur on the first working day, or as soon as practical after any rainfall event that may impact the system."

Signed _____ Environmental Investigator Date 6/4/2009

Signed _____ Supervisor Date 6/5/09

Attachments: (in order of final report submittal)

___Enforcement Action Request (EAR)

✓ Letter to Facility (specify type) : General Compliance w/ Summary of Investigation findings

Investigation Report

___Sample Analysis Results

___Manifests

___NOR

___Maps, Plans, Sketches

✓ Photographs

✓ Correspondence from the facility

✓ Other (specify) :

Attachments A - E

Buddy Garcia, *Chairman*
Larry R. Soward, *Commissioner*
Bryan W. Shaw, Ph.D., *Commissioner*
Mark R. Vickery, P.G., *Executive Director*

TEXAS COMMISSION ON ENVIRONMENTAL QUALITY

Protecting Texas by Reducing and Preventing Pollution

June 8, 2009

Mr. John Wagner, P.E.
Texas Department of Transportation
2727 S. Austin Avenue
Georgetown, Texas 78626

Re: Compliance at:
US 183 Main Lanes Frontage Drainage Improvements, southeast corner of the intersection at US 183 and Pond Springs Road, Austin (Williamson County), Texas
EAPP ID No.: 11-98120101

Dear Mr. Wagner:

On April 9, 2009, Mr. Zach Lanfear of the Texas Commission on Environmental Quality (TCEQ) Austin Region Office conducted an investigation of the above-referenced facility to evaluate compliance with applicable requirements for the Edwards Aquifer Protection Program. No violations are being alleged as a result of the investigation; however, please see the comment in the attached Summary of Investigation Findings.

The TCEQ appreciates your assistance in this matter and your compliance efforts to ensure protection of the State's environment. If you or members of your staff have any questions regarding these matters, please feel free to contact Mr. Zach Lanfear in the Austin Region Office at (512) 339-2929.

Sincerely,

Carolyn D. Runyon, Water Section Manager
FOR Austin Region Office

CDR/zcl

cc: Mr. Gary Lantrip, P.G., P.E., Texas Department of Transportation, Austin

printed on recycled paper using soy-based ink

Summary of Investigation Findings

US 183 MAINLANES FRONTAGE DRAINAGE IMPROVEMENTS Investigation # 743699

Investigation Date: 04/09/2009

, WILLIAMSON COUNTY,

Additional ID(s): 11-98120101

No Violations Associated to this Investigation

ADDITIONAL ISSUES

Description	Additional Comments
Item #1	The TCEQ would like to reiterate that the "The Inspection and Maintenance of Permanent Water Quality Control Devices" document approved under US 183 Mainlanes, Frontage Roads and Drainage Improvements Water Pollution Abatement Plan (EAPP File No. 11-98120101) states, "In addition to monthly inspections, an inspection will occur on the first working day, or as soon as practical after any rainfall event that may impact the system."

Texas Commission on Environmental Quality

Austin Region Office

Attachment A: Image Documentation

Investigation No.: 743699

Reconnaissance Investigation at Regulated Entity:
US 183 Mainlanes Frontage Drainage
Improvements

Date of TCEQ Investigation: April 9, 2009

TCEQ IMAGE DOCUMENTATION

Investigation No.:	743699	**Regulated Entity:**	US 183 Mainlanes Frontage Drainage Improvements		
Investigation Date:	April 9, 2009	**Photographer:**	Zach Lanfear	**County:**	Williamson

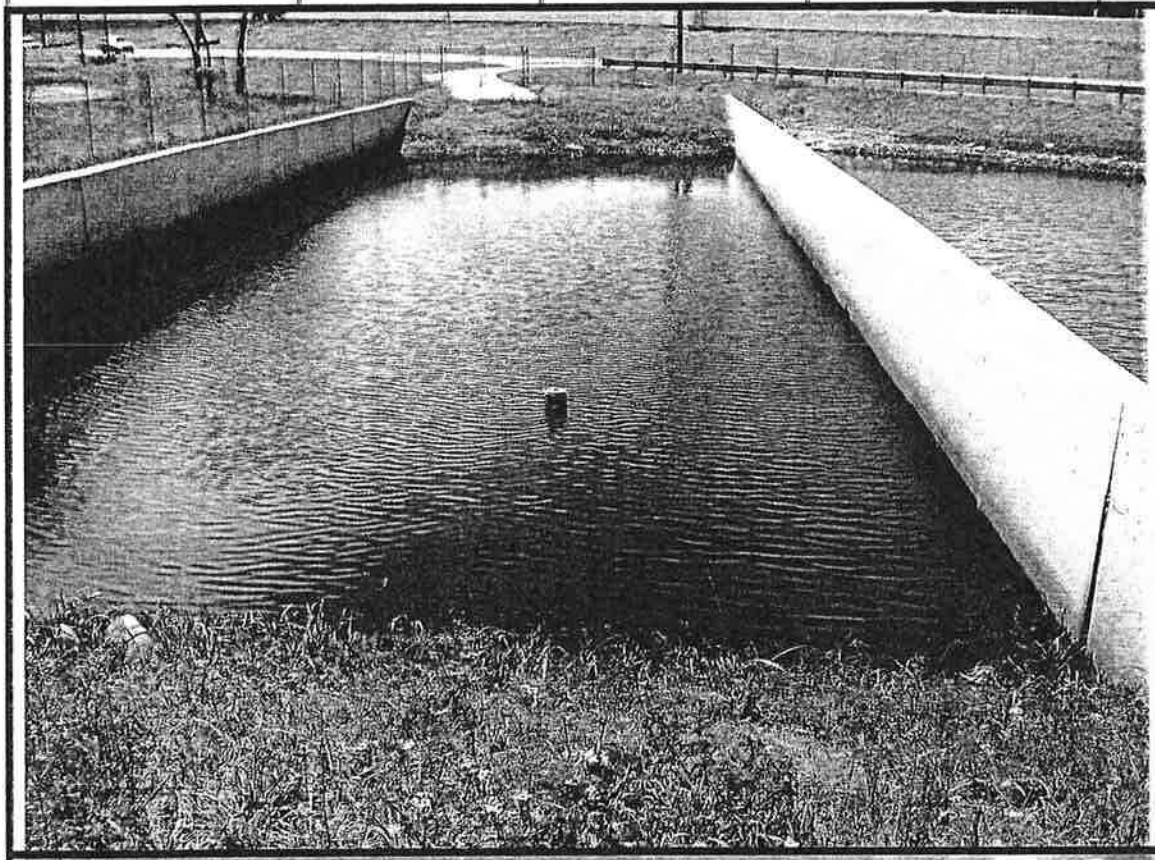

SUBJECT: Sedimentation/Filtration Water Quality Pond

COMMENTS: The basin in the center of the image is the filtration basin and the basin to the right is the sedimentation basin. The water was black and had a stagnant odor. The last measurable rainfall event occurred on April 2, 2009. The pond should have drained no later than 48 hours after the rainfall.

PHOTO #1

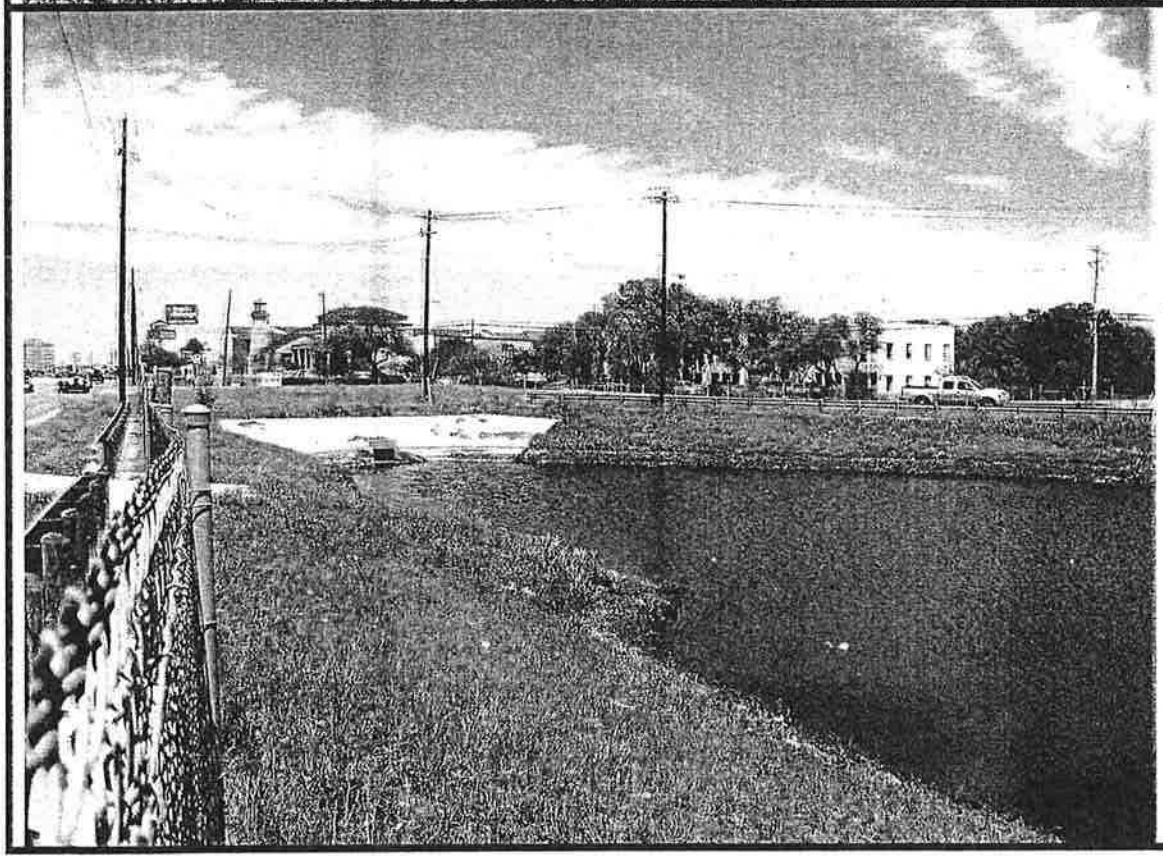

SUBJECT: Sedimentation/Filtration Water Quality Pond

COMMENTS: View facing north. The inlet structure can be seen in the center left of the photo. The water was black and had a stagnant odor. The last measurable rainfall event occurred on April 2, 2009. The pond should have drained no later than 48 hours after the rainfall.

PHOTO #2

TCEQ IMAGE DOCUMENTATION

Investigation No.:	743699	Regulated Entity:	US 183 Mainlanes Frontage Drainage Improvements		
Investigation Date:	April 9, 2009	Photographer:	Zach Lanfear	County:	Williamson

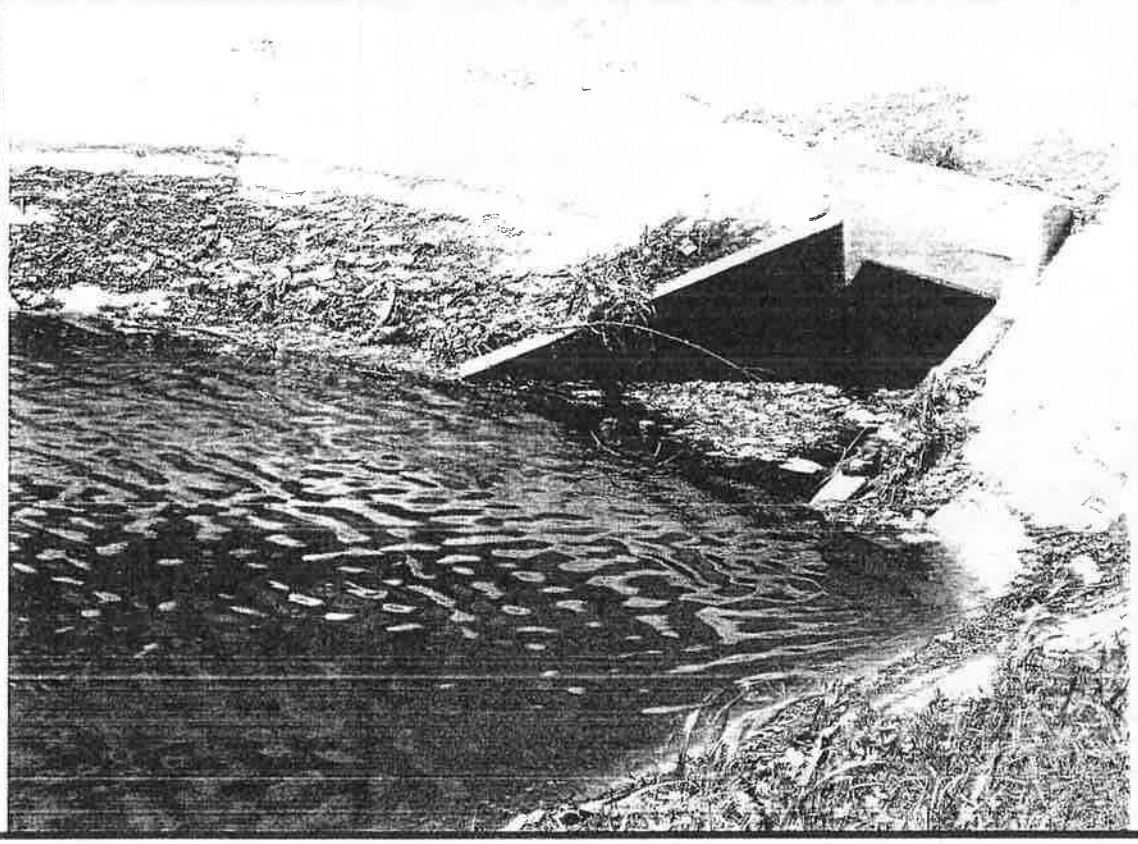

SUBJECT:
Sedimentation/Filtration Water Quality Pond

COMMENTS: Trash and other debris had collected at the high water mark and in the inlet.

PHOTO #3

Texas Commission on Environmental Quality

Austin Region Office

Attachment B: Precipitation Data

Investigation No.: 743699

Reconnaissance Investigation at Regulated Entity:
US 183 Mainlanes Frontage Drainage
Improvements

Date of TCEQ Investigation: April 9, 2009

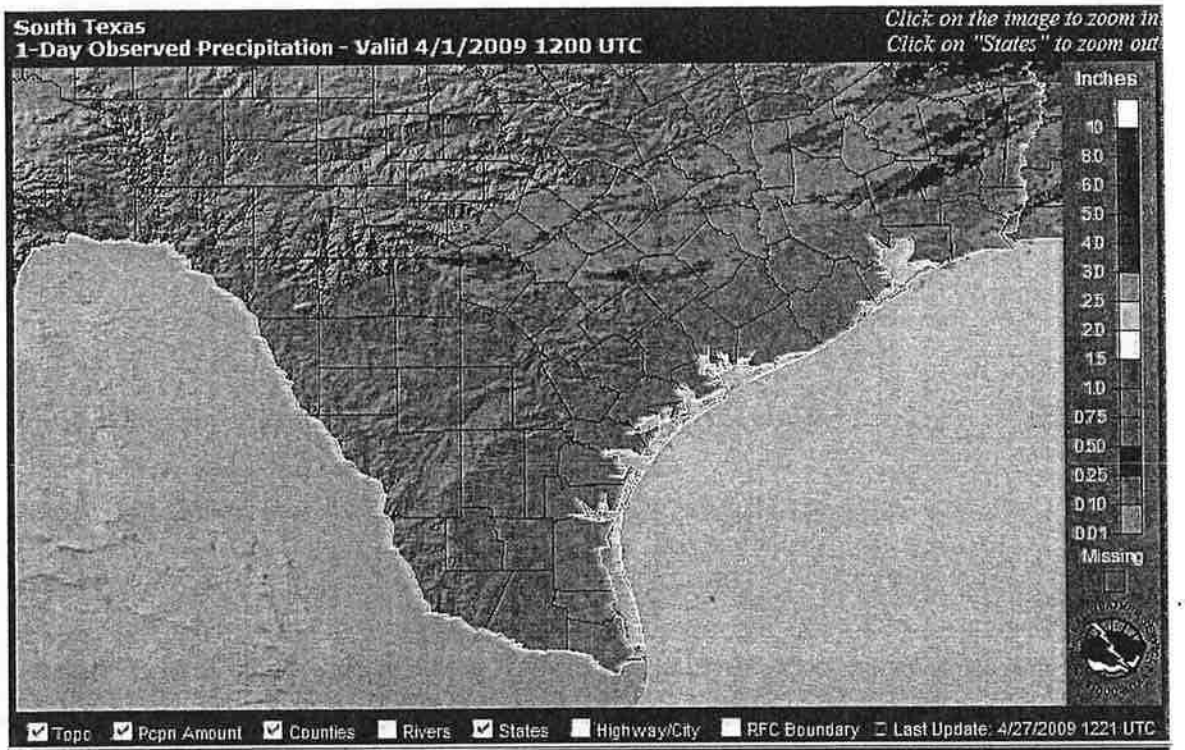
South Texas
1-Day Observed Precipitation - Valid 4/1/2009 1200 UTC
Click on the image to zoom in
Click on "States" to zoom out
Inches
10
8.0
6.0
5.0
4.0
3.0
2.5
2.0
1.5
1.0
0.75
0.50
0.25
0.10
0.01
Missing
Topo
Pcpn Amount
Counties
Rivers
States
Highway/City
RFC Boundary
Last Update: 4/27/2009 1221 UTC

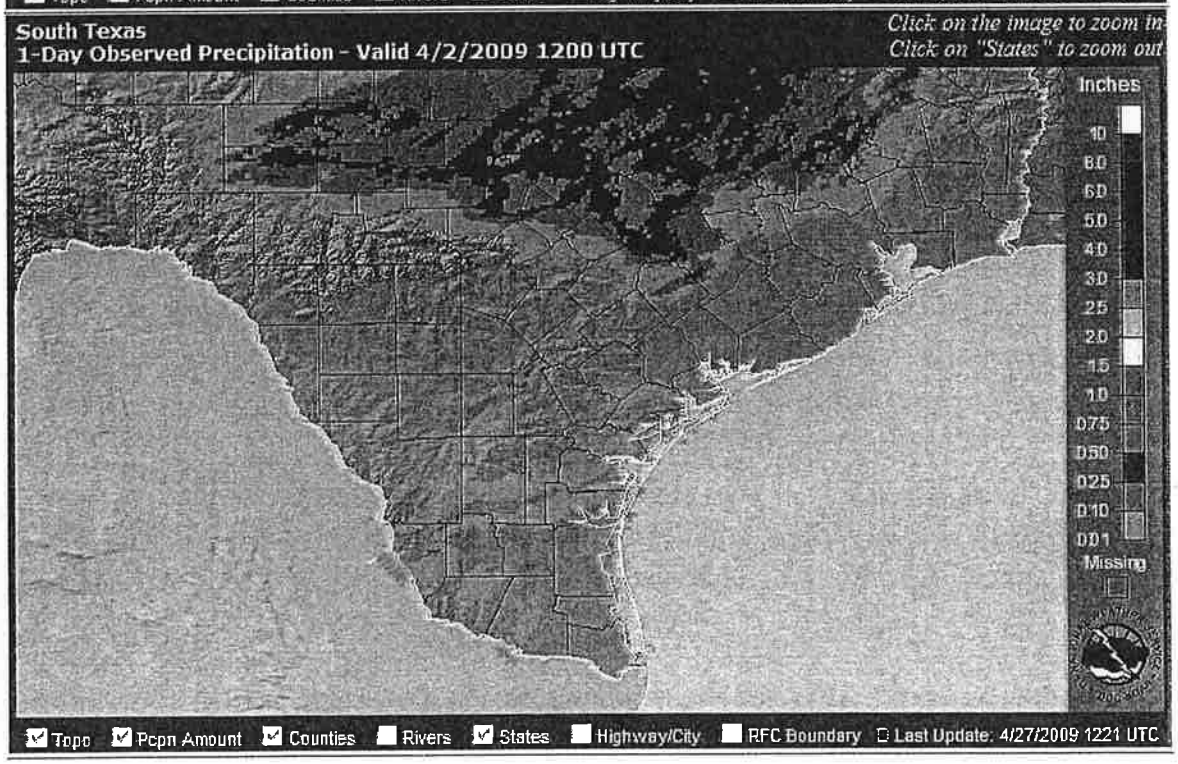
South Texas
1-Day Observed Precipitation - Valid 4/2/2009 1200 UTC
Click on the image to zoom in
Click on "States" to zoom out
Inches
10
8.0
6.0
5.0
4.0
3.0
2.5
2.0
1.5
1.0
0.75
0.50
0.25
0.10
0.01
Missing
Topo
Pcpn Amount
Counties
Rivers
States
Highway/City
RFC Boundary
Last Update: 4/27/2009 1221 UTC

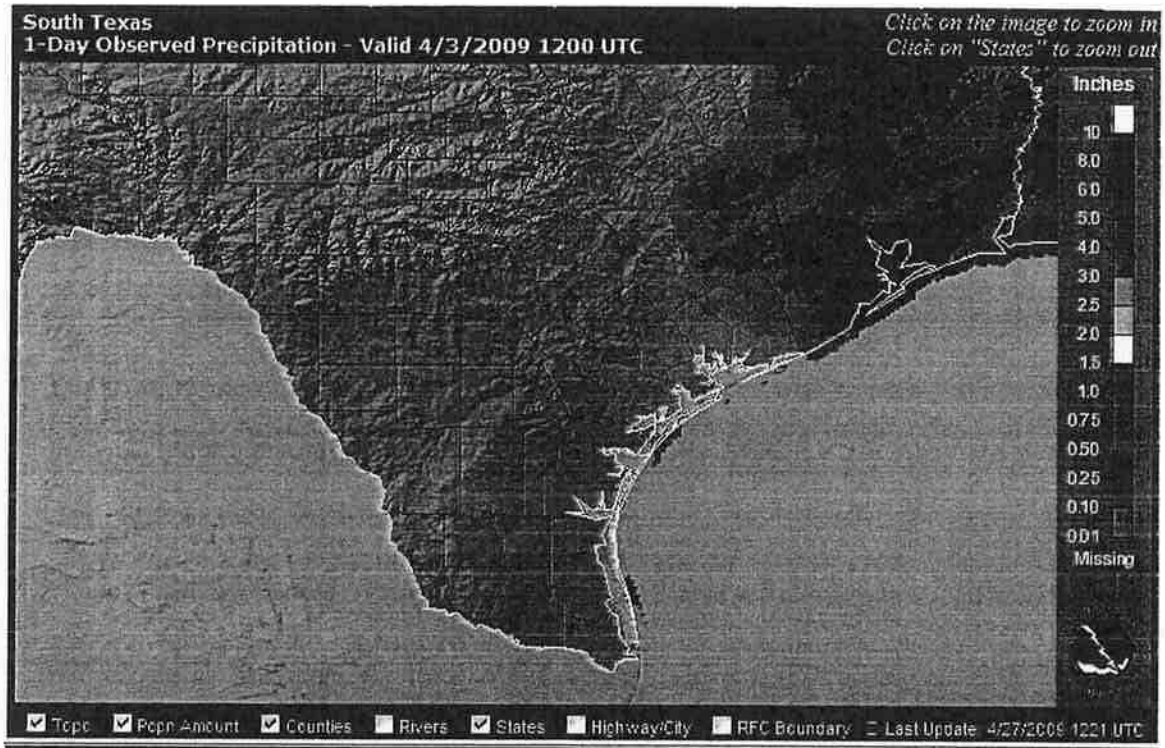
South Texas
1-Day Observed Precipitation - Valid 4/3/2009 1200 UTC
Click on the image to zoom in
Click on "States" to zoom out
Inches
10
8.0
6.0
5.0
4.0
3.0
2.5
2.0
1.5
1.0
0.75
0.50
0.25
0.10
0.01
Missing
Topo
Pcpn Amount
Counties
Rivers
States
Highway/City
RFC Boundary
Last Update: 4/27/2009 1221 UTC

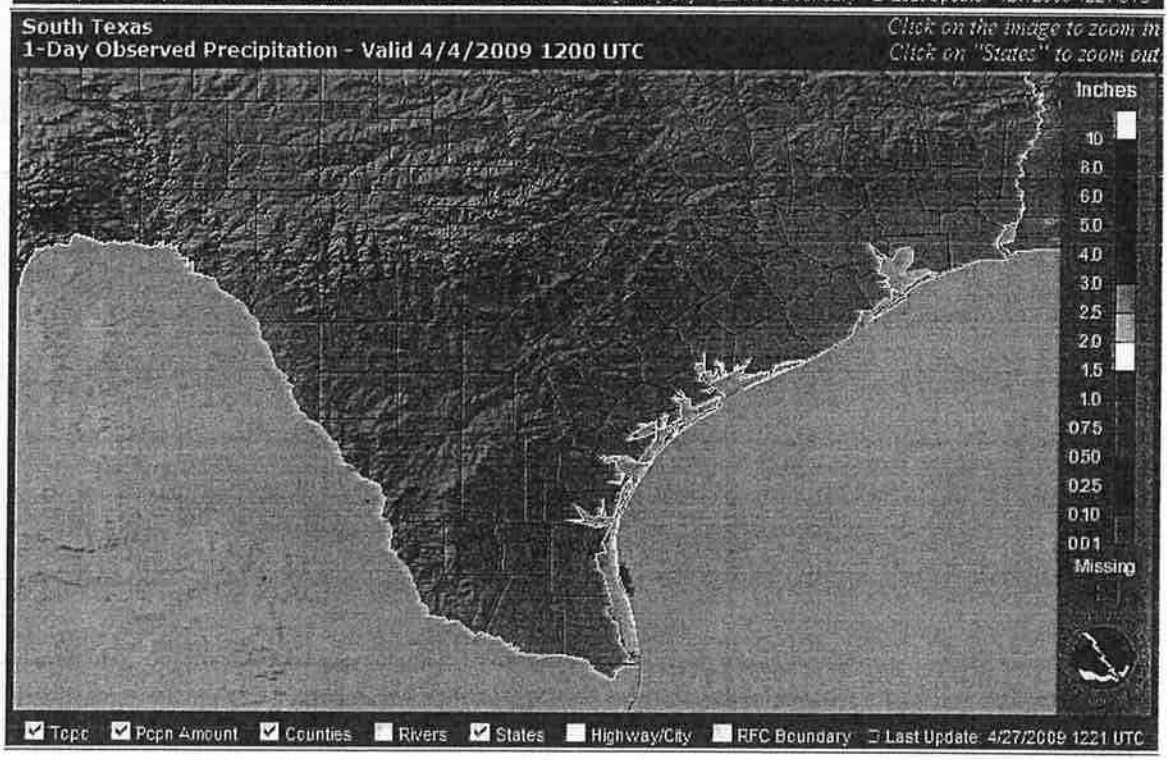
South Texas
1-Day Observed Precipitation - Valid 4/4/2009 1200 UTC
Click on the image to zoom in
Click on "States" to zoom out
Inches
10
8.0
6.0
5.0
4.0
3.0
2.5
2.0
1.5
1.0
0.75
0.50
0.25
0.10
0.01
Missing
Topo
Pcpn Amount
Counties
Rivers
States
Highway/City
RFC Boundary
Last Update: 4/27/2009 1221 UTC

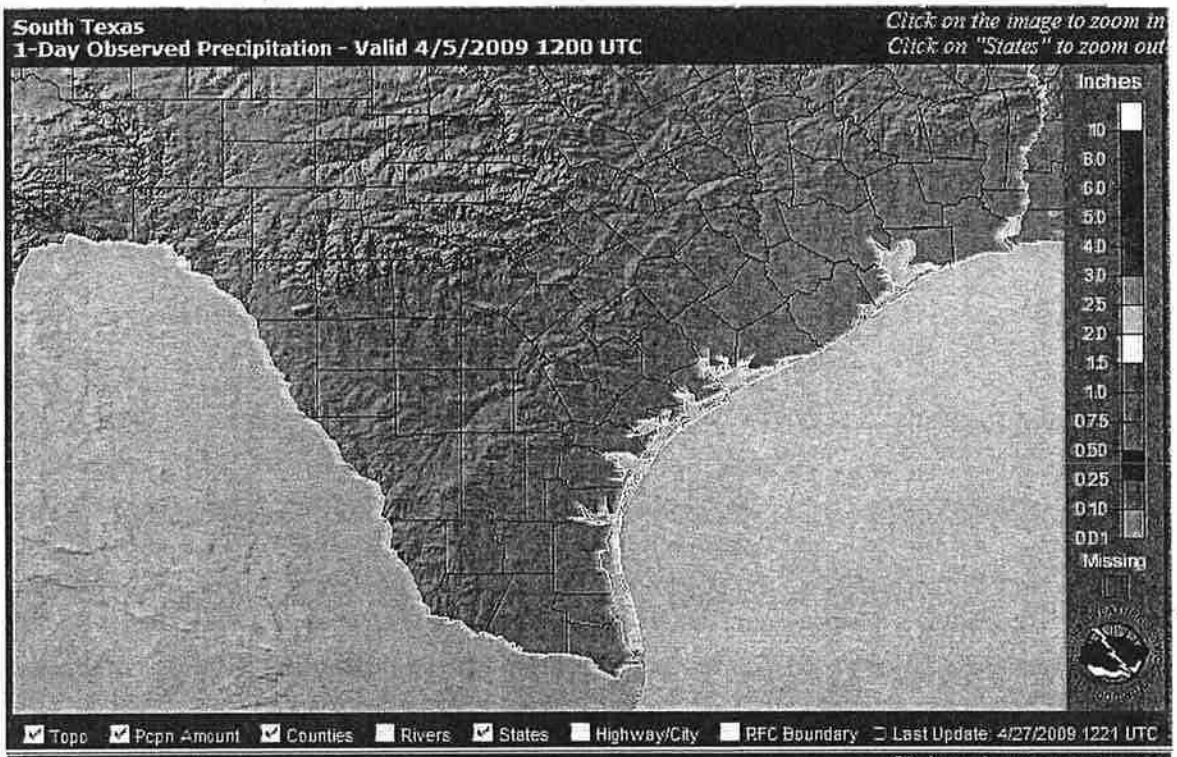
South Texas
1-Day Observed Precipitation - Valid 4/5/2009 1200 UTC
Click on the image to zoom in
Click on "States" to zoom out
Inches
10
8.0
6.0
5.0
4.0
3.0
2.5
2.0
1.5
1.0
0.75
0.50
0.25
0.10
0.01
Missing
Topo
Pcpn Amount
Counties
Rivers
States
Highway/City
RFC Boundary
Last Update: 4/27/2009 1221 UTC

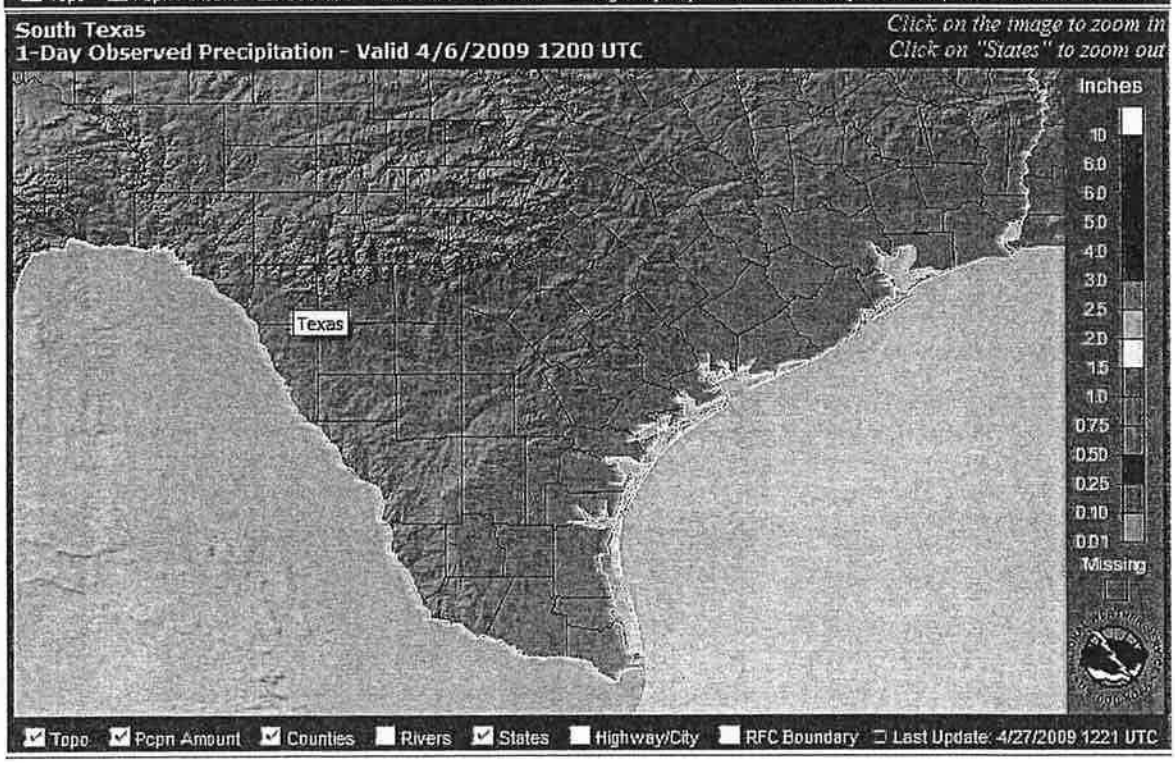
South Texas
1-Day Observed Precipitation - Valid 4/6/2009 1200 UTC
Click on the image to zoom in
Click on "States" to zoom out
Inches
10
8.0
6.0
5.0
4.0
3.0
2.5
2.0
1.5
1.0
0.75
0.50
0.25
0.10
0.01
Missing
Texas
Topo
Pcpn Amount
Counties
Rivers
States
Highway/City
RFC Boundary
Last Update: 4/27/2009 1221 UTC

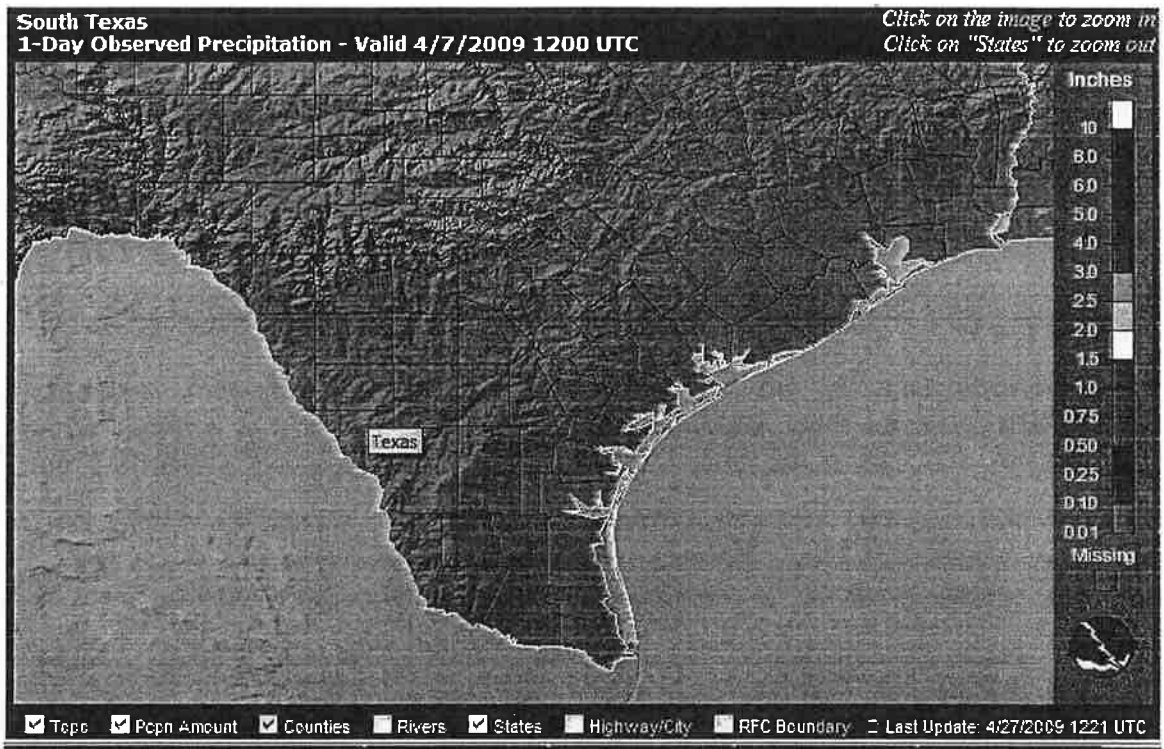
South Texas
1-Day Observed Precipitation - Valid 4/7/2009 1200 UTC
Click on the image to zoom in
Click on "States" to zoom out
Inches
10
8.0
6.0
5.0
4.0
3.0
2.5
2.0
1.5
1.0
0.75
0.50
0.25
0.10
0.01
Missing
Texas
Topo
Pcpn Amount
Counties
Rivers
States
Highway/City
RFC Boundary
Last Update: 4/27/2009 1221 UTC

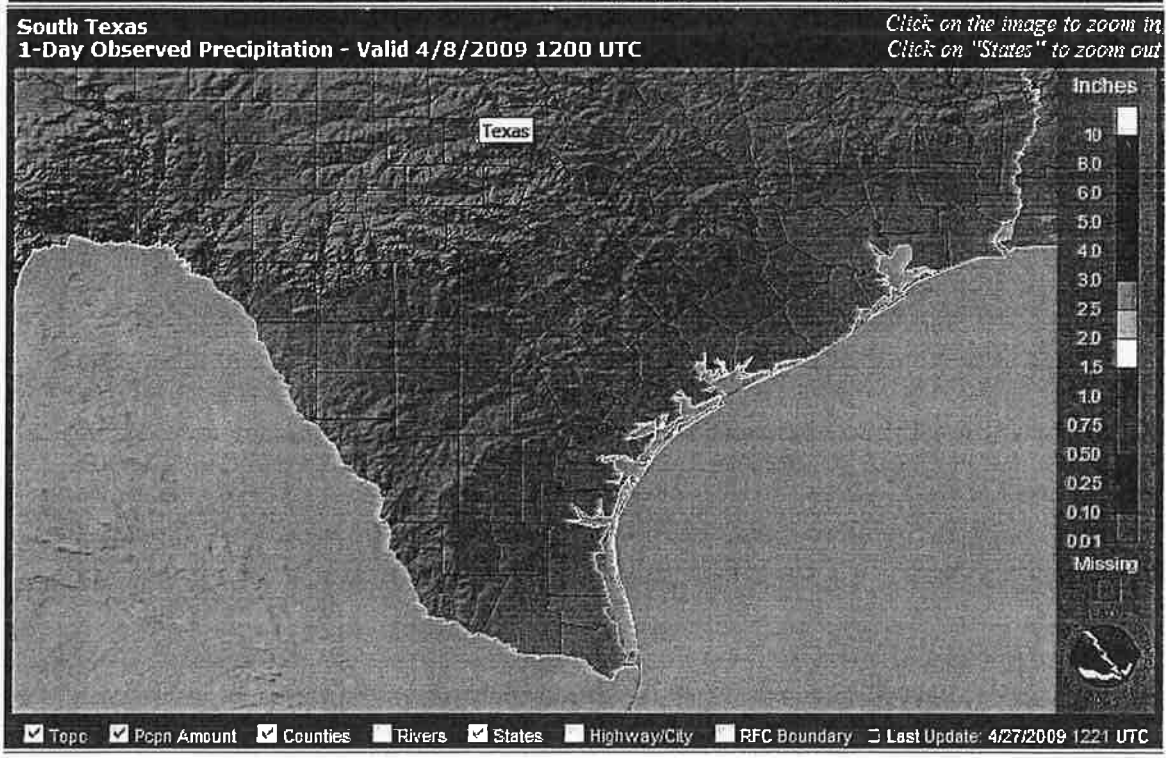
South Texas
1-Day Observed Precipitation - Valid 4/8/2009 1200 UTC
Click on the image to zoom in
Click on "States" to zoom out
Inches
10
8.0
6.0
5.0
4.0
3.0
2.5
2.0
1.5
1.0
0.75
0.50
0.25
0.10
0.01
Missing
Texas
Topo
Pcpn Amount
Counties
Rivers
States
Highway/City
RFC Boundary
Last Update: 4/27/2009 1221 UTC

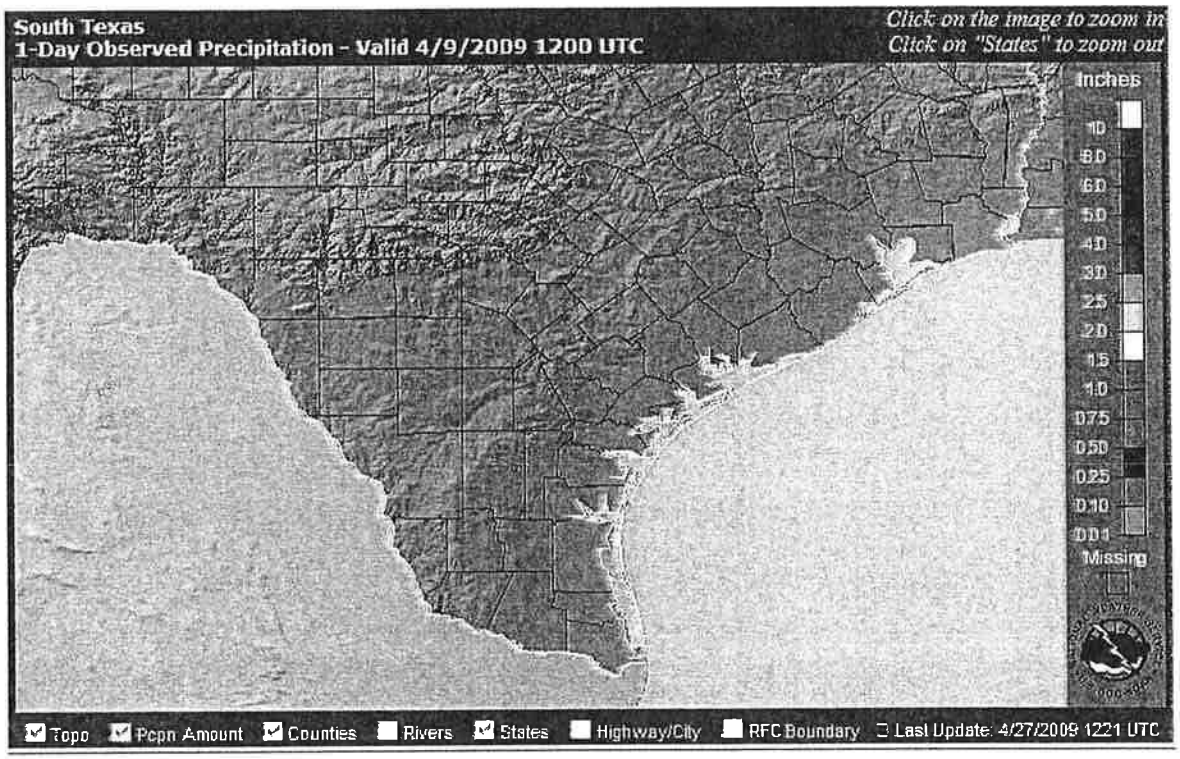

Citation:

National Weather Service. "AHPS Precipitation Analysis." . May 13, 2009. National Oceanic and Atmospheric Administration. April 10, 2009 <http://water.weather.gov/>.

Weather Data for Austin, Texas

04/01/09	75.2°	48.2°	0.00"	0.16"	0.06"
04/02/09	71.6°	55.4°	0.24"	0.16"	0.06"
04/03/09	77°	42.8°	0.00"	0.16"	0.06"
04/04/09	84.2°	55.4°	0.00"	0.12"	0.04"
04/05/09	69.8°	53.6°	0.00"	0.20"	0.07"
04/06/09	62.6°	42.8°	0.00"	0.16"	0.06"
04/07/09	77°	41°	0.00"	0.12"	0.04"
04/08/09	86°	50°	0.00"	0.20"	0.07"
04/09/09	93.2°	59°	0.00"	0.16"	0.06"

Citation:

Austin Water Utility Conservation Division. "Weather Data for Austin, Texas." . 1995. City of Austin. May 14, 2009 <http://www.ci.austin.tx.us/watercon/rainfall_data.cfm>.

Texas Commission on Environmental Quality

Austin Region Office

Attachment C: Exit Interview Form

Investigation No.: 743699

Reconnaissance Investigation at Regulated Entity:
US 183 Mainlanes Frontage Drainage
Improvements

Date of TCEQ Investigation: April 9, 2009

Zach Lanfear - TxDOT Water Quality Pond

From: Zach Lanfear
To: Billy Benningfield
Date: 5/7/2009 1:14 PM
Subject: TxDOT Water Quality Pond
CC: Gary Lantrip
Attachments: 11-98120101 - US Mainlanes Frontage Drainage Improvements Exit Interview Form.pdf

Billy,

I would like to followup on our conversation from yesterday. The sedimentation/filtration pond located at US-183 and Pond Springs Rd is failing to drain within 48 hours. TCEQ observed the full water quality pond on April 9, 2009, and measurable rainfall had not occurred since April 2, 2009. I am requesting maintenance and inspection records from the past 12 months for the pond. Please submit these records to the TCEQ Austin Region Office within 30 days from today.

You said that mainetance work has begun on pond. I would like to reiterate that any water pumped from the water quality is a waste and must be treated as such and disposed of properly.

Please keep me up to date on the status of the maintenance. Based on our conversation yesterday, its sounds like the pond can be repaired in under 30 days. Depending on the cause and severity of the failure we may require you to submit a compliance schedule for the pond. This should only be necessary if there is a major issue with the pond that will take more than 30 days to repair.

In order to bring the pond into compliance please:

1) Identify the cause(s) of the failure and report the findings to the TCEQ Austin Region Office.
2) Maintain the pond. (Already underway per our conversation yesterday)
3) Submit photographs with descriptions of the maintained pond.
4) Monitor the pond after the next rainfall event after maintenance to see if it drains within 48 hours. Report the results to the TCEQ Austin Region Office.

Attached is a copy of the TCEQ Exit Interview Form. It outlines the alleged violation and records request.

Thank you for your cooperation,

Zach Lanfear
Environmental Investigator
Texas Commission on Environmental Quality
2800 South IH-35, Suite 100
Austin, TX 78704
(512) 339-2929
ZLanfear@tceq.state.tx.us

Please consider the environment before printing this e-mail

TCEQ EXIT INTERVIEW FORM: Potential Violations and/or Records Requested

Regulated Entity/Site Name	US 183 Mobile Bridge Over the Lavaca			**TCEQ Add. ID No. RN No. (optional)**	
Investigation Type	comp	**Contact Made In-House (Y/N)** N	**Purpose of Investigation**	Recon	
Regulated Entity Contact	T. Cory Lodge		**Telephone No.**	(512) 552-9103	**Date Contacted** 3/6/2009
Title	P.E., PE, Tx Dot		**Fax No.**		**Date Faxed** 3/9/2009

NOTICE: The information provided in this form is intended to provide clarity to issues that have arisen during the investigation process between the TCEQ and the regulated entity named above and *does not represent final TCEQ findings related to violations*. Any potential or alleged violations discovered after the date on this form will be communicated by telephone to the regulated entity representative prior to the issuance of a notice of violation or enforcement. Conclusions drawn from this investigation, including additional violations or potential violations discovered (if any) during the course of this investigation, will be documented in a final investigation report.

Issue		**For Records Request: identify the necessary records, the company contact and date due to the agency. For Alleged and Potential Violation issues: include the rule in question with the clearly described potential problem. Other type of issues: fully describe.**	
No.	**Type[1]**	**Rule Citation (if known)**	**Description of Issue**
1	AV	30 TAC 213.4(k)	Failure to maintain the sediment and filtration water quality pond located at US 183 and Red Sprgs Rd. The pond is dedicated to WPAP #13-1 & the approved WPAP plan was not implemented.
1	RR		Please submit signed and notarized maintenance records for the pond for the past 12 months.

[1]Issue Type Can Be One or More of: AV (Alleged Violation), PV (Potential Violation), O (Other), or RR (Records Request)

Did the TCEQ document the regulated entity named above operating without proper authorization?	☐ Yes	☒ No
Did the investigator advise the regulated entity representative that continued operation is not authorized?	☐ Yes	☒ No

Document Acknowledgment. Signature on this document establishes only that the regulated entity (company) representative received a copy of this document and associated continuation pages on the date noted. If contact was made by telephone, document will be faxed to regulated entity; therefore, signature not required.

	3/9/2009		
Investigator Name (Signed & Printed)	**Date**	**Regulated Entity Representative Name (Signed & Printed)**	**Date**

If you have questions about any information on this form, please contact your local TCEQ Regional Office.
Individuals are entitled to request and review their personal information that the agency gathers on its forms. They may also have any errors in their information corrected. To review such information, call 512-239-3282.

White Copy: Regulated Entity Representative Yellow Copy: TCEQ

(Note: Use additional pages as necessary) Page 1 of 1

TCEQ-20085 (Rev. 6/07)

Zach Lanfear - TxDOT Water Quality Pond

From: Zach Lanfear
To: Billy Benningfield
Date: 5/7/2009 1:14 PM
Subject: TxDOT Water Quality Pond
CC: Gary Lantrip
Attachments: 11-98120101 - US Mainlanes Frontage Drainage Improvements Exit Interview Form.pdf

Billy,

I would like to followup on our conversation from yesterday. The sedimentation/filtration pond located at US-183 and Pond Springs Rd is failing to drain within 48 hours. TCEQ observed the full water quality pond on April 9, 2009, and measurable rainfall had not occurred since April 2, 2009. I am requesting maintenance and inspection records from the past 12 months for the pond. Please submit these records to the TCEQ Austin Region Office within 30 days from today.

You said that mainetance work has begun on pond. I would like to reiterate that any water pumped from the water quality is a waste and must be treated as such and disposed of properly.

Please keep me up to date on the status of the maintenance. Based on our conversation yesterday, its sounds like the pond can be repaired in under 30 days. Depending on the cause and severity of the failure we may require you to submit a compliance schedule for the pond. This should only be necessary if there is a major issue with the pond that will take more than 30 days to repair.

In order to bring the pond into compliance please:

1) Identify the cause(s) of the failure and report the findings to the TCEQ Austin Region Office.
2) Maintain the pond. (Already underway per our conversation yesterday)
3) Submit photographs with descriptions of the maintained pond.
4) Monitor the pond after the next rainfall event after maintenance to see if it drains within 48 hours. Report the results to the TCEQ Austin Region Office.

Attached is a copy of the TCEQ Exit Interview Form. It outlines the alleged violation and records request.

Thank you for your cooperation,

Zach Lanfear
Environmental Investigator
Texas Commission on Environmental Quality
2800 South IH-35, Suite 100
Austin, TX 78704
(512) 339-2929
ZLanfear@tceq.state.tx.us

Please consider the environment before printing this e-mail

TCEQ EXIT INTERVIEW FORM: Potential Violations and/or Records Requested

Regulated Entity/Site Name	US 183 Mainlanes Frontage Drainage Improvements			**TCEQ Add. ID No. RN No. (optional)**	11-98120101		
Investigation Type	EAPP	**Contact Made In-House (Y/N)**	N	**Purpose of Investigation**	Recon		
Regulated Entity Contact	J. Gary Lantrip			**Telephone No.**	(512) 832-7103	**Date Contacted**	5/6/2009
Title	P.G., P.E., TxDot			**Fax No.**		**Date ~~Faxed~~ EMAILED**	5/7/2009

NOTICE: The information provided in this form is intended to provide clarity to issues that have arisen during the investigation process between the TCEQ and the regulated entity named above and *does not represent final TCEQ findings related to violations.* Any potential or alleged violations discovered after the date on this form will be communicated by telephone to the regulated entity representative prior to the issuance of a notice of violation or enforcement. Conclusions drawn from this investigation, including additional violations or potential violations discovered (if any) during the course of this investigation, will be documented in a final investigation report.

Issue		**For Records Request: identify the necessary records, the company contact and date due to the agency. For Alleged and Potential Violation issues: include the rule in question with the clearly described potential problem. Other type of issues: fully describe.**	
No.	**Type[1]**	**Rule Citation (if known)**	**Description of Issue**
1	AV	30TAC 213.4(K)	Failure to maintain the sedimentation/filtration water quality pond located at US-183 and Pond Springs Road. The pond is identified as sed/fil Pond 3 in the approved WPAP (EAPP ID No: 11-98120101.
2	RR		Please submit inspection and maintenance records for the pond for the past 12 months.

[1]Issue Type Can Be One or More of: AV (Alleged Violation), PV (Potential Violation), O (Other) or RR (Records Request)

Did the TCEQ document the regulated entity named above operating without proper authorization?	☐ Yes	☒ No
Did the investigator advise the regulated entity representative that continued operation is not authorized?	☐ Yes	☒ No

Document Acknowledgment. Signature on this document establishes only that the regulated entity (company) representative received a copy of this document and associated continuation pages on the date noted. If contact was made by telephone, document will be faxed to regulated entity; therefore, signature not required.

	5/7/2009		
Investigator Name (Signed & Printed)	**Date**	**Regulated Entity Representative Name (Signed & Printed)**	**Date**

If you have questions about any information on this form, please contact your local TCEQ Regional Office.
Individuals are entitled to request and review their personal information that the agency gathers on its forms. They may also have any errors in their information corrected. To review such information, call 512-239-3282.

White Copy: Regulated Entity Representative Yellow Copy: TCEQ

(Note: Use additional pages as necessary) Page 1 of 1

TCEQ-20085 (Rev. 6/07)

Texas Commission on Environmental Quality

Austin Region Office

Attachment D: E-mail Correspondence

Investigation No.: 743699

Reconnaissance Investigation at Regulated Entity:
US 183 Mainlanes Frontage Drainage
Improvements

Date of TCEQ Investigation: April 9, 2009

From: "Gary Lantrip" <JLANTRI@dot.state.tx.us>
To: "kevin Smith" <KSMITH@tceq.state.tx.us>
Date: 4/29/2009 3:20 PM
Subject: Filtration Pond - Pond Springs @ US 183 nbfr.

Kevin,

Regarding your mention of the Water Quality Pond performance (at location above), I've checked with Mr. Benningfield, the coordinator for BMPs. He recalls the last maintenance for this pond in 2007. The pond was drained, and the top ½ inch of the sand filter was removed and replaced. He is aware that after the recent rains the drawdown times are excessive.

Technically, the pond still "works" but certainly needs some sort of remedial adjustment.

I wanted you to know that we will reassess what may be causing this problem and will keep you informed.

J. Gary Lantrip, P.G., P.E.
Texas Department of Transportation Austin District - 7901 N. IH 35
(512) 832-7103

Texas Commission on Environmental Quality

Austin Region Office

Attachment E: Inspection and Maintenance Documentation from Respondent

Investigation No.: 743699

Reconnaissance Investigation at Regulated Entity: US 183 Mainlanes Frontage Drainage Improvements

Date of TCEQ Investigation: April 9, 2009

From: "Billy Benningfield" <BBENNIN@dot.state.tx.us>
To: "Zach Lanfear" <ZLanfear@tceq.state.tx.us>
Date: 5/26/2009 3:53 PM
Subject: Re: Fwd: TxDOT Water Quality Pond

>>> Thomas Brown 5/26/2009 8:56 AM >>>
The bolded text is our reply to the posed questions.

1) Identify the cause(s) of the failure and report the findings to the TCEQ Austin Region Office.
The filtration pond had formed a crust of silt that prevented the storm water from entering the drain tubes.

2) Maintain the pond. (Already underway per our conversation yesterday)
The storm water Fasility was dewatered. We then rented a skid steer track loader on May 15th, 2009 and removed approximately two inches of silt saturated filtration sand from the pond and hauled to the landfill. We also mowed the entire pond area and removed litter.

3) Submit photographs with descriptions of the maintained pond.
Printed and sent to B Benningfield with Inspection reports.

4) Monitor the pond after the next rainfall event after maintenance to see if it drains within 48 hours. Report the results to the TCEQ Austin Region Office.
On May 16th, 2009 we had approximately two inches of rain that collected in the rain gage at the pond. On May 19th, we inspected the pond and found that the storm water had drained from the pond.

If you have any questions or need more information, please feel free to contact me. 845-6067

Texas Department of Transportation

H.M.T. MAINTENANCE CHECKLIST FORM:

Name of Inspector: Jimmy Holland **Date:** 11/3/08

Location: County: 246 Roadway: 183 Pond Springs

Inventory Code Name/Number: 183 Pond Springs

Type of Inspection (check one): Scheduled Visit ☑, Spill Visit ☐, Other Visit ☐

Weather: Estimated Rainfall 1" ☑, 2" ☐, 3" ☐, 4" ☐, or ____

Summary of Inspection: Very Little water Lot of trash.

Actions Taken: Pick up Trash

Supervisors Signature: [signature]

Texas Department of Transportation

H.M.T. MAINTENANCE CHECKLIST FORM:

Name of Inspector: Jimmy Holland **Date:** 1/2/09

Location: County: 246 Roadway: 183 Pondsprings

Inventory Code Name/Number: 183 pondsprings

Type of Inspection (check one): Scheduled Visit ☑, Spill Visit ☐, Other Visit ☐

Weather: Estimated Rainfall 1" ☐, 2" ☐, 3" ☐, 4" ☐, or None

Summary of Inspection: No Water Lot of Trash

Actions Taken: Pick up Trash.

Supervisors Signature: [signature]

Texas Department of Transportation

H.M.T. MAINTENANCE CHECKLIST FORM:

Name of Inspector: Jimmy Holland **Date:** 3/3/09

Location: County: 246 Roadway: 183 Pond Springs

Inventory Code Name/Number: 183 & Pond Springs

Type of Inspection (check one): Scheduled Visit ☑, Spill Visit ☐, Other Visit ☐

Weather: Estimated Rainfall 1" ☐, 2" ☑, 3" ☐, 4" ☐, or ____

Summary of Inspection: Half full very little trash

Actions Taken: Pick up trash

Supervisors Signature: [signature]

Texas Department of Transportation

H.M.T. MAINTENANCE CHECKLIST FORM:

Name of Inspector: Jimmy Holland **Date:** 5/19/09

Location: County: 246 Roadway: 183 Bonds Springs

Inventory Code Name/Number: Bonds Springs

Type of Inspection (check one): Scheduled Visit ☐, Spill Visit ☐, Other Visit ☐

Weather: Estimated Rainfall 1" ☐, 2" ☑, 3" ☐, 4" ☐, or ____

Summary of Inspection: Very Little Water Pick up Trash

Very Little Trash (GD)

Actions Taken:

Supervisors Signature: [signature]



CLEAN & SCRAPE CRUST / FRI. MAY 15, 2009

The Inspection and Maintenance of Permanent Water Quality Control Devices

Texas Department of Transportation
Austin District

FOREWORD:

The existing Memorandum of Understanding (MOU) between the Texas Department of Transportation (TxDOT) and the Texas Natural Resource Conservation Commission (TNRCC) addresses the maintenance of permanent water quality control structures. TxDOT has been constructing permanent water quality controls, specifically for compliance of TNRCC regulations since 1990. These controls are the mitigation for the change in quantity and quality of storm water that leaves the roadway surface. The intent is to reduce the potential for impacts to the Edwards Aquifer as well as surface water flow. The areas where the host rock of this aquifer is exposed on the surface is called the Recharge Zone. When roadway projects are located over this zone, a Water Pollution Abatement Plan (WPAP) is required. The WPAP is submitted to secure TNRCC approval for the project and its proposed water quality controls. The TNRCC requires a prescribed maintenance plan for the permanent controls that will continue to operate after completion of the project. This Maintenance Plan will provide a comprehensive and consistent policy in which all the existing and future controls will receive the same basic program of inspection and maintenance and will insure the continued performance as originally designed. This plan does not address actions needed to handle accidental spills, rather it is for routine maintenance of the facilities. If a foreign material is noted and it is suspected to be hazardous, TxDOT employees will not handle, nor attempt to remove it, rather specialized contractors will be used.

The need for inspection and maintenance is as important as the design and construction of each device. The continued efficiency and performance of the original design of water quality controls is dependent upon a regular inspection of the device. This inspection will evaluate the need for any cleaning, repair, or correction that can be made to improve the operation of the facility.

BACKGROUND:

The controls used are Hazardous Material Traps (HMT), Sedimentation ponds, Filtration ponds and Detention basins. The HMT is a concrete box designed to contain fuel, liquid cargo, or hazardous materials spilled onto the roadway as the result of a collision or accident. Sedimentation ponds, detention ponds and filtration ponds are controls that basically slow and temporarily contain a specified volume of storm water. Sedimentation ponds allow for sediment suspended in the flow to settle out. Filtration ponds have filtering media through which water is passed. Detention basins are basically for decreasing the velocity of flow. All are intended to reduce the amount of solids that would otherwise be released down gradient, downstream, or allowed to directly enter the aquifer via the surface recharge water. These controls are required,

approved, and constructed under the auspices of the TNRCC.

The permanent water quality controls and the "Best Management Practices" have evolved over the last six years. The conceptual design of water quality controls, their size, the filtering process, and the construction materials are constantly changing. This is attributed to site-specific conditions, access restrictions, and design improvements. The newer and older facilities have different maintenance requirements, but the principal goal is to ensure their proper operation, within their original design parameters.

Despite the various designs, it is desirable to have a standardized list of maintenance actions that addresses all of the water quality controls. The advantage is the uniformity of the maintenance routine. It promotes a mutual understanding between TxDOT and TNRCC on what is expected for each location in all conditions. This Maintenance Plan is specific enough to address the performance of any particular location, yet broad enough to accommodate the variety of designs.

Presently, there are over twenty-five locations of permanent controls in the Austin area alone. The prospect of having this many different maintenance plans invites a confusing list of variables that would hinder a clear understanding of compliance as well as placing an undue burden on TxDOT maintenance personnel.

REGULAR MAINTENANCE POLICY AND INSPECTION PROCEDURES:

Hazardous Material Trap (HMT):
Check monthly. The valve shall be checked for proper operation and accumulated sediment and debris will be removed as necessary to ensure proper operation of the facility.

Sedimentation Ponds and Filtration Basins:
Clay bottom basins: Check monthly. Vegetation will be controlled to ensure proper operation.
Concrete lined basins: Check monthly.

If the inspection notes that trash or other unsightly debris is present, it must be removed.
If sedimentation has significantly reduced the capacity of the pond, that sediment, vegetation, and all other material will be removed. Records will be kept for each inspection and any remedial work performed.

POST-RAINFALL INSPECTIONS

In addition to monthly inspections, an inspection will occur on the first working day, or as soon as practical after any rainfall event that may impact the system.

MAINTENANCE CHECKLIST:

CHECKLIST FORM:

Name of inspector - _____. Date - _____.

Location - County____ Roadway_____ (Inventory Code Name/Number) _____.

Type of inspection (check one) - Weather (est. rainfall prior, 1", 2", 3"or >)._____
Scheduled visit___ Spill visit ____. Other visit_____.

Summary of
Inspection_____
_____

Actions Taken

_____
_____
_____
_____
_____
_____
_____
_____
_____
_____

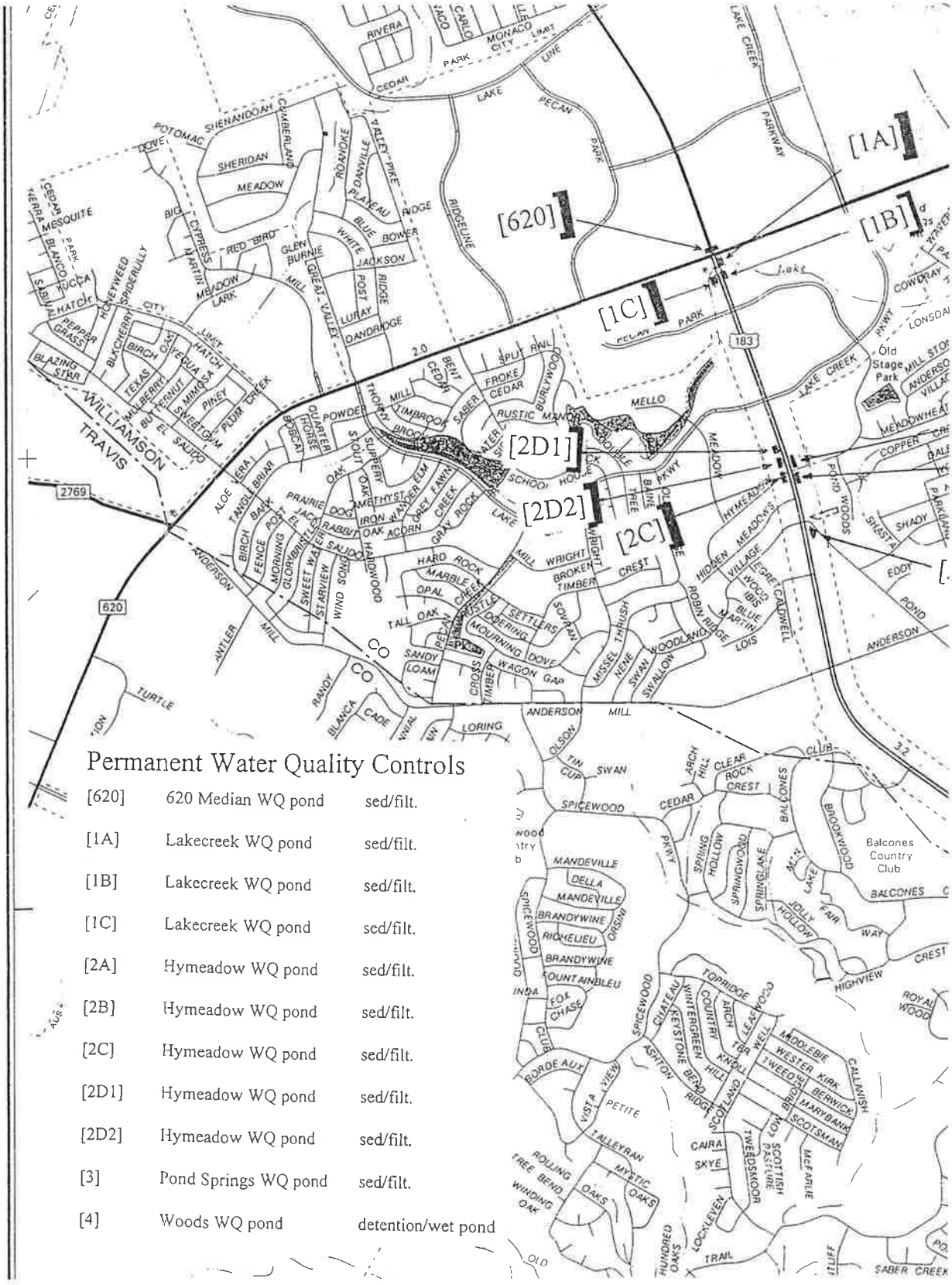

Permanent Water Quality Controls

[620]	620 Median WQ pond	sed/filt.
[1A]	Lakecreek WQ pond	sed/filt.
[1B]	Lakecreek WQ pond	sed/filt.
[1C]	Lakecreek WQ pond	sed/filt.
[2A]	Hymeadow WQ pond	sed/filt.
[2B]	Hymeadow WQ pond	sed/filt.
[2C]	Hymeadow WQ pond	sed/filt.
[2D1]	Hymeadow WQ pond	sed/filt.
[2D2]	Hymeadow WQ pond	sed/filt.
[3]	Pond Springs WQ pond	sed/filt.
[4]	Woods WQ pond	detention/wet pond

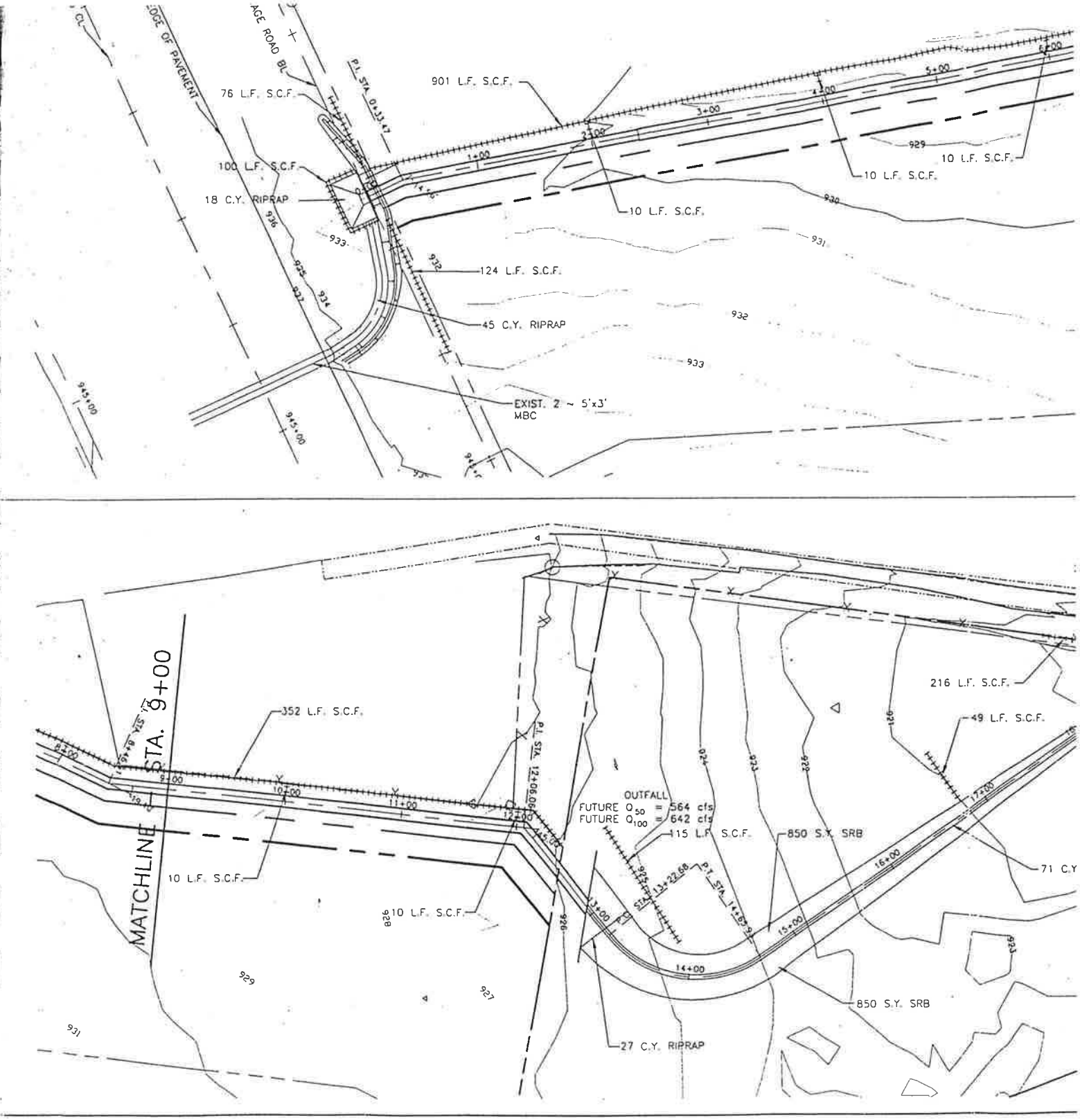
EDGE OF PAVEMENT
AGE ROAD BL
P.I. STA. 0+33.47
76 L.F. S.C.F.
901 L.F. S.C.F.
100 L.F. S.C.F.
18 C.Y. RIPRAP
10 L.F. S.C.F.
10 L.F. S.C.F.
10 L.F. S.C.F.
124 L.F. S.C.F.
45 C.Y. RIPRAP
EXIST. 2 ~ 5'x3' MBC
MATCHLINE STA. 9+00
352 L.F. S.C.F.
P.I. STA. 12+06.09
OUTFALL
FUTURE Q50 = 564 cfs
FUTURE Q100 = 642 cfs
115 L.F. S.C.F.
850 S.Y. SRB
216 L.F. S.C.F.
49 L.F. S.C.F.
71 C.Y
10 L.F. S.C.F.
10 L.F. S.C.F.
850 S.Y. SRB
27 C.Y. RIPRAP

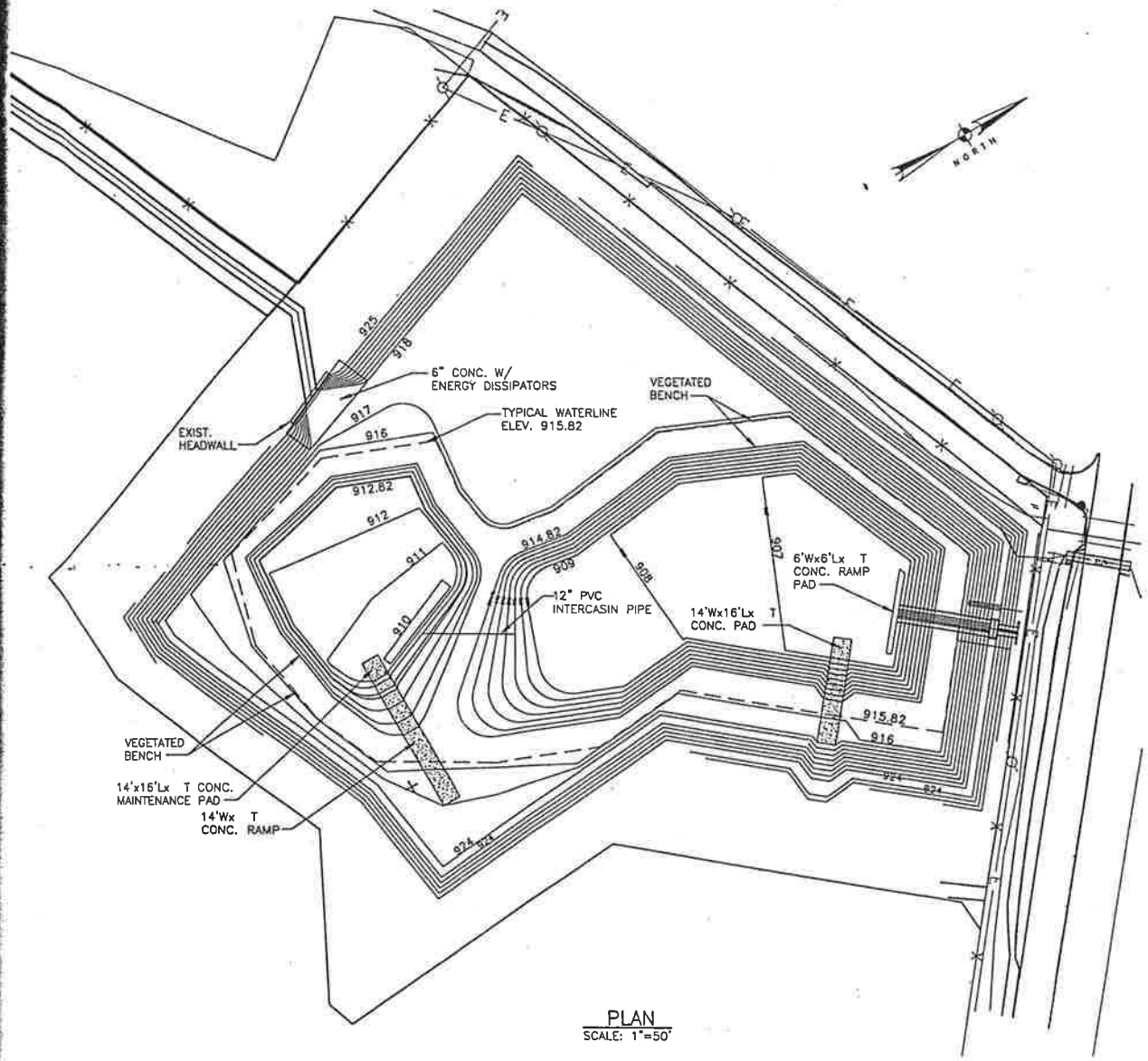

PLAN
SCALE: 1"=50'

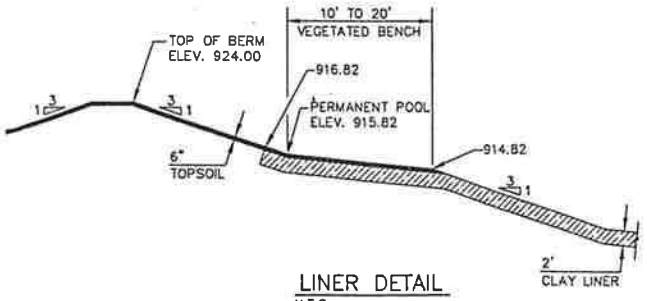

LINER DETAIL
N.T.S.

AREA TREA

NOT FOR CONS

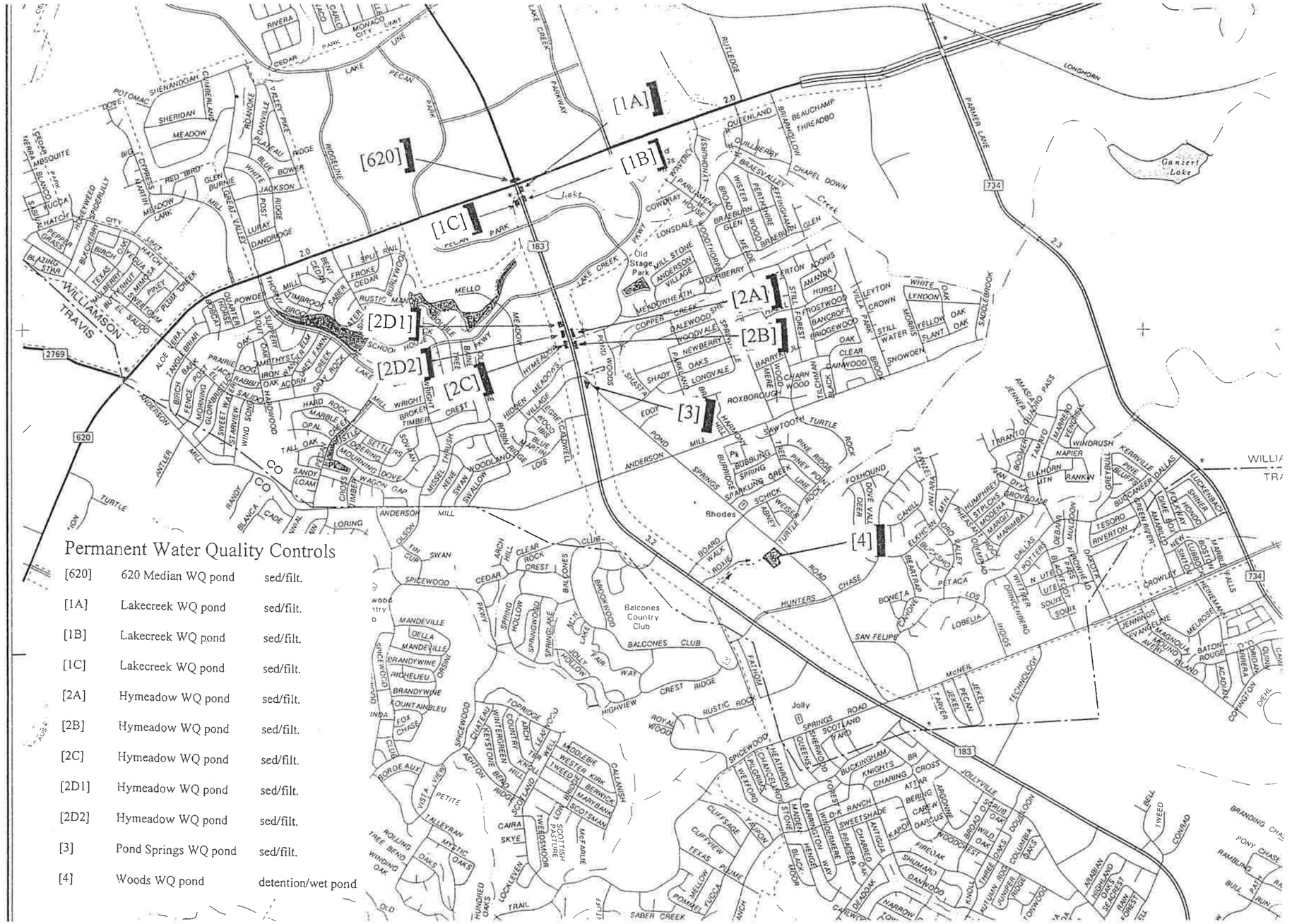

Permanent Water Quality Controls

[620]	620 Median WQ pond	sed/filt.
[1A]	Lakecreek WQ pond	sed/filt.
[1B]	Lakecreek WQ pond	sed/filt.
[1C]	Lakecreek WQ pond	sed/filt.
[2A]	Hymeadow WQ pond	sed/filt.
[2B]	Hymeadow WQ pond	sed/filt.
[2C]	Hymeadow WQ pond	sed/filt.
[2D1]	Hymeadow WQ pond	sed/filt.
[2D2]	Hymeadow WQ pond	sed/filt.
[3]	Pond Springs WQ pond	sed/filt.
[4]	Woods WQ pond	detention/wet pond

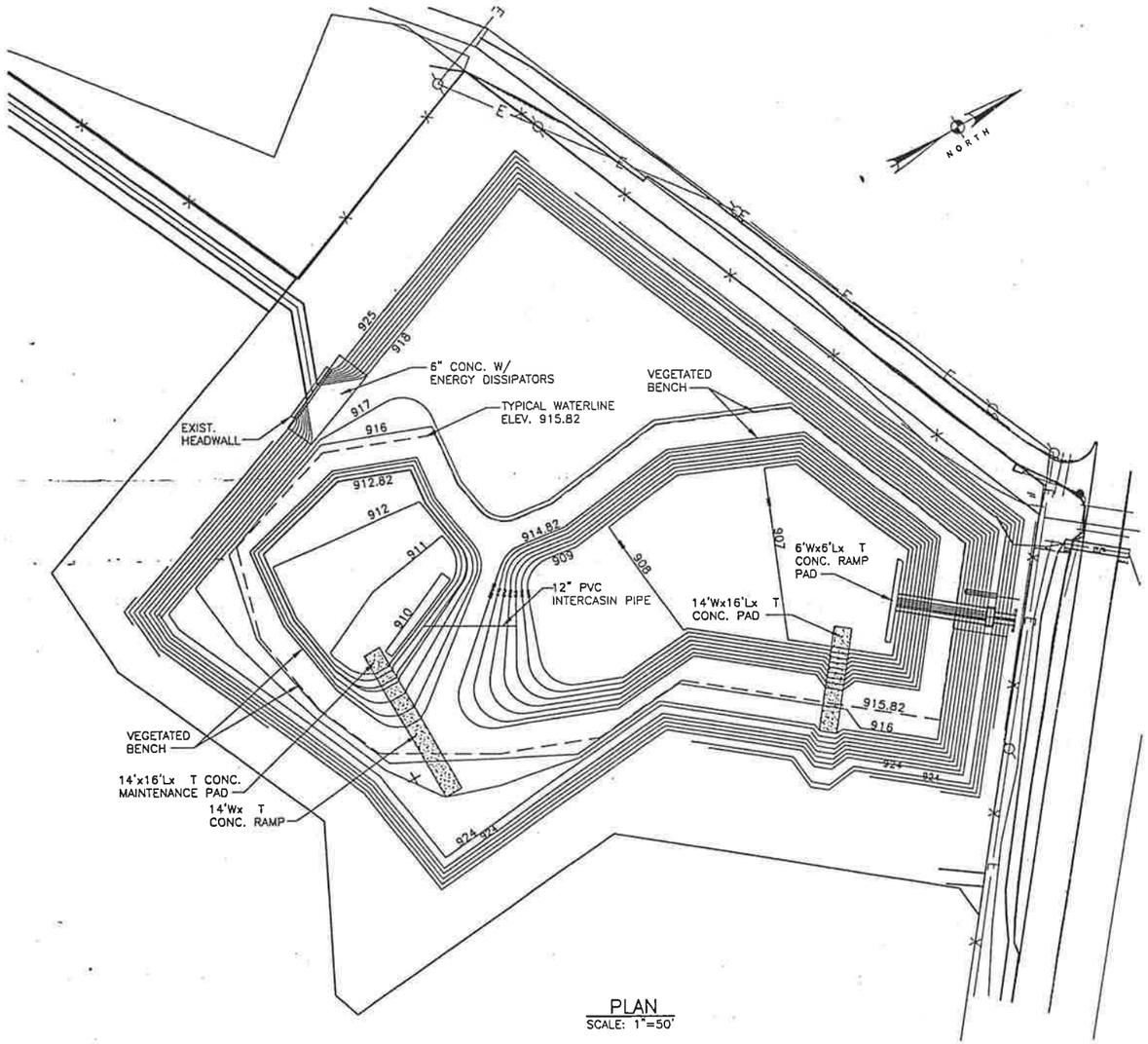

PLAN
SCALE: 1"=50'

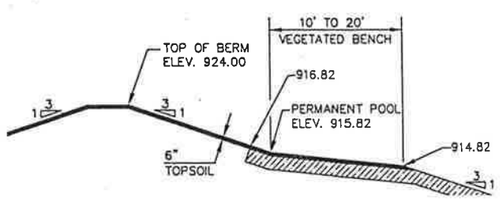

AREA TREATED = 102.17 ACRES

STATE OF TEXAS
C. D. BILLS
83877
LICENSED
PROFESSIONAL ENGINEER

Turner Collie & Braden Inc.
ENGINEERS • PLANNERS • PROJECT MANAGERS

AUSTIN | 72-07401-022

Texas Department of Transportation

WOODS POND
WATER QUALITY AND



ROCK FILTER DAM (R.F.D.)

QUANTITIES

ITEM#	DESCRIPTION	AMOUNT
5005	ROCK FILTER DAM (TYPE 2)	70 L.F.
5005	ROCK FILTER DAM (REMOVE)(TYPE 2)	70 L.F.
5010	STABILIZED CONST. EXIT (TYPE 1)	83 S.Y.
5010	STABILIZED CONST. EXIT (REMOVE)(TYPE 1)	83 S.Y.
160	FURNISH & PLACE TOPSOIL (CL 2)(4 IN.)	7509 SY.
164	SEED FOR EROSION CONTROL (TYPE _)	7509 SY.
164	DRILL SEED (PERM.)(URBAN)(CLAY)	7509 SY.
168	VEGETATIVE WATERING	307 MG
169	SOIL RETENTION BLANKET (CL1)(TYPE A)	1856 SY.
432	RIPRAP (CONC.)(CLB)	161 C.Y.
5012	EARTHWORK (EROSION CONTROL) (CLASS 2)	111 CY.
5012	BACKHOE WORK (EROSION CONTROL) (CLASS 1)	20 HR.
5012	EXCAVATOR (EROSION CONTROL) (CLASS 1)	20 HR.
5012	BLADING (EROSION CONTROL) (CLASS 1)	20 HR.
	TEMPORARY SEDIMENT CONTROL FENCE	1893 L.F.
	TEMPORARY SEDIMENT CONTROL FENCE (REMOVE AND REPLACE)	100 L.F.
	TEMPORARY SEDIMENT CONTROL FENCE (REMOVE)	1893 L.F.

STATE OF TEXAS
DAVID L. GARRETT
76626
REGISTERED PROFESSIONAL ENGINEER
7/15/98

Turner Collie & Braden Inc.
ENGINEERS • PLANNERS • PROJECT MANAGERS

AUSTIN | 72-07401-022

Texas Department of Transportation

US 183 – WOODS OUTFALL
EROSION/SEDIMENTATION CONTROL PLAN

SCALE: 1"=100' | SHEET – OF –

KKY		STATE	FEDERAL AID PROJECT NO.	
CDB	6	TEXAS	F257(16)	U.S.183
KKY/GS	STATE DIST. NO.	COUNTY		
CDB/DLG	14	WILLIAMSON		1

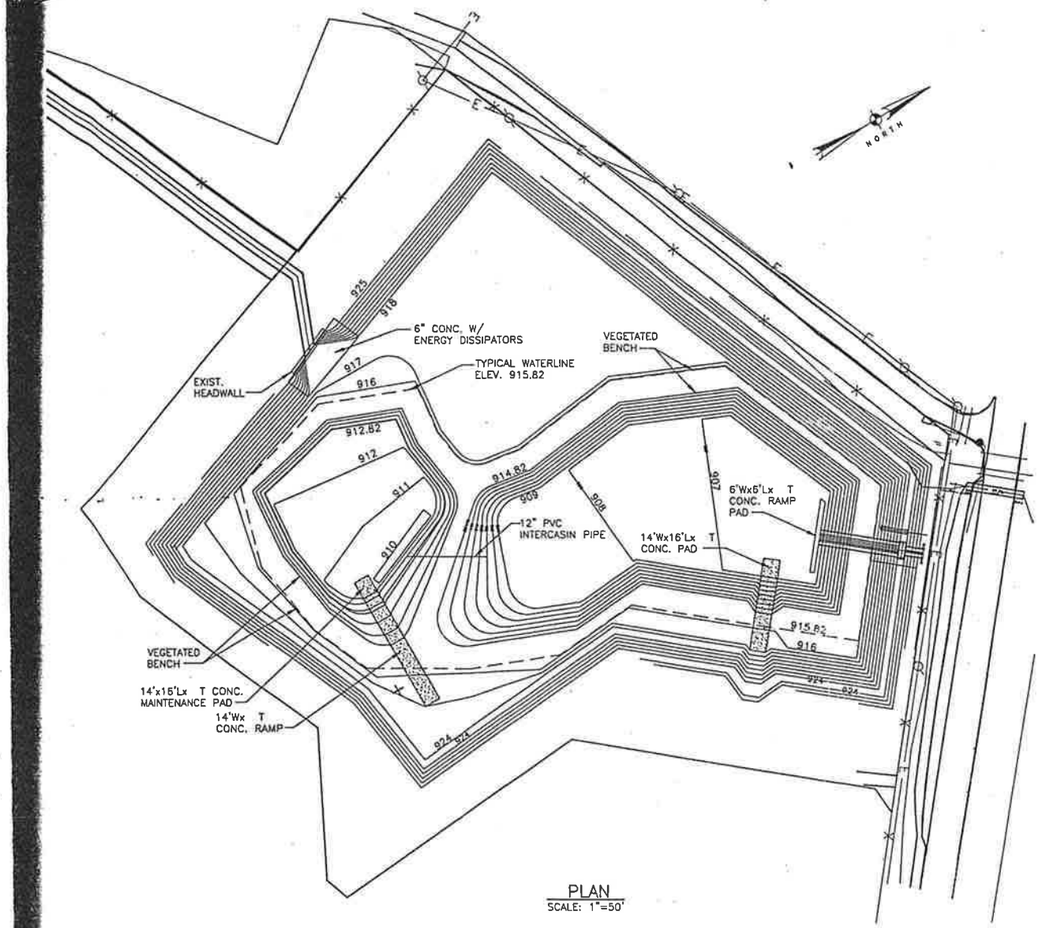

PLAN
SCALE: 1"=50'

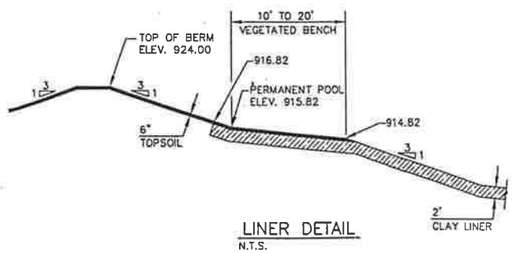

LINER DETAIL
N.T.S.

AREA TREATED = 102.17 ACRES

STATE OF TEXAS
C. D. BILLS
83877
LICENSED
PROFESSIONAL ENGINEER

C. D. Bills
9/10/98

NOT FOR CONSTRUCTION

Turner Collie & Braden Inc.
ENGINEERS • PLANNERS • PROJECT MANAGERS

AUSTIN | 72-07401-022

Texas Department of Transportation

WOODS POND
WATER QUALITY AND
DETENTION POND
PLAN AND DETAILS

CDB		STATE	FEDERAL AID PROJECT NO.			
DLG	6	TEXAS	F257(16)			U.S.183
CWS	STATE DIST. NO.	COUNTY				
DLG	AUS	WILLIAMSON	0151	05	038	-

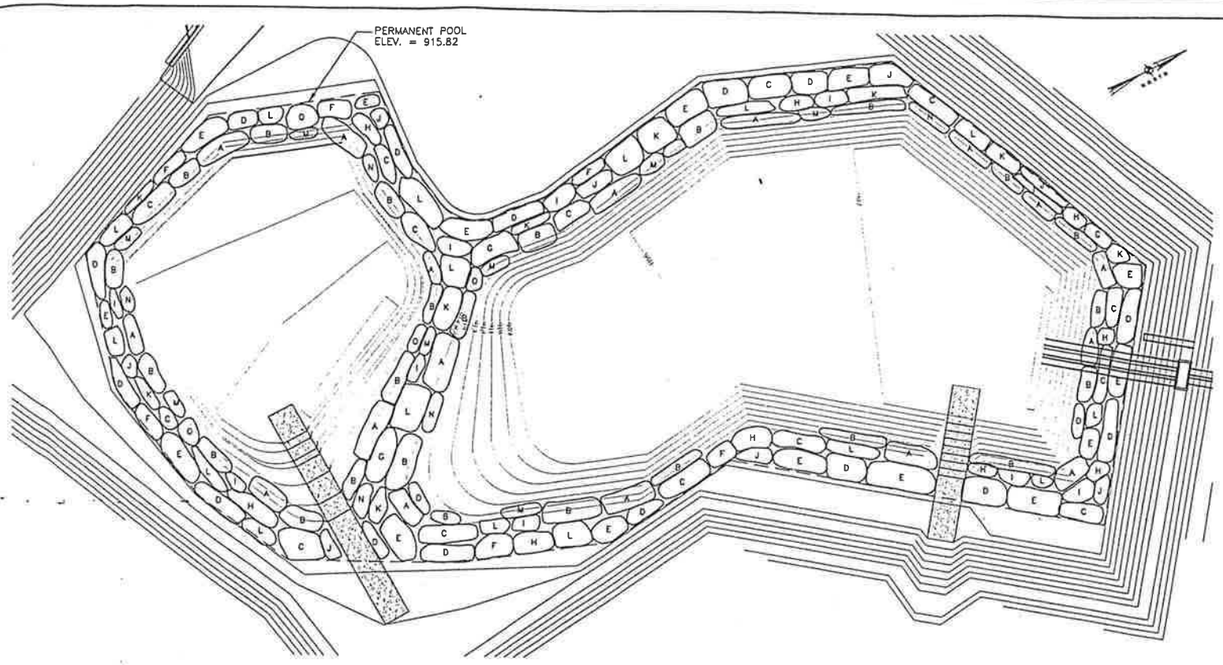

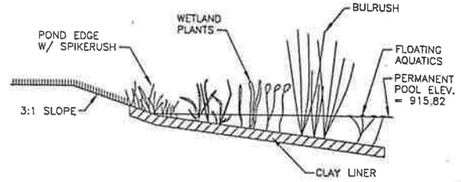

CROSS SECTION OF A TYPICAL VEGETATED BENCH AREA
N.T.S.

MINIMUM REQUIREMENTS FOR WET POND LANDSCAPING
SCALE: 1"=30'

MINIMUM REQUIREMENTS FOR WET POND LANDSCAPING

ALL WET POND PLANTS SHALL BE PROPAGATED OR HARVESTED FROM REGIONALLY ADAPTED STOCK WHEN FEASIBLE. THESE ARE PLANT SPECIES OR GENOTYPES WHICH ARE NATIVE TO A RANGE OF WITHIN 250 MILES OF THE PROJECT SITE. WET POND PLANTS SHALL BE INSTALLED AT WATER DEPTHS APPROPIATE FOR THE SPECIES.

WET POND SURFACE AREA = 106,339 SF

MINIMUM PLANT QUANITY = (106,339)(0.03) = 3190

PLANT CATEGORY	RATIO	MIN. REQ'D	MIN. SIZE	BARE ROOT
BULRUSH	40%	1276	2 GALLON	1 BARE ROOT
SPIKERUSH	20%	638	2.5" LINERS	1 BARE ROOT
MARSH DIVERSITY	20%	638	1 GALLON	1 BARE ROOT
ARROWHEAD	10%	319	1 GALLON	1 BARE ROOT
AQUATICS	10%	319	1 GALLON	1 BARE ROOT
PLANTS PROVIDED		3190		

PLANTS PROVIDED

SYMBOL	COMMON NAME	SCIENTIFIC NAME	QUANTITY
A	BULRUSH	SCIRPUS VALIDUS	500
B	BULRUSH	SCIRPUS CALIFORNICUS	530
C	THREE-SQUARE BULRUSH	SCIRPUS AMERICANUS	265
D	SPIKERUSH	ELEOCHARIS MONTEVIDENSIS	320
E	SPIKERUSH	ELEOCHARIS QUADRANGULATA	320
F	FLATSEDGE	CYPERUS OCHRAEUS	90
G	YELLOW FLAG IRIS	IRIS PSEUDACORUS	60
H	SOFT RUSH	JUNCUS EFFUSUS	150
I	WATER WILLOW	JUSTICIA AMERICANA	140
J	WATER CLOVER	MARSILEA MACROPODA	130
K	PICKERELWEED	PONTEDERIA CORDATA L. PICKERELWEED	160
L	ARROWHEAD	SAGGITARIA LATIFOLIA	330
M	COONTAIL	CERATOPHYLLUM spp. COON-TAIL	110
N	FANWORT	NYMPHAEA ORDORATA	110
O	SAGO PONDWEED	POTOMAGETON PECTINATUS	110
			3325

NOT FOR CONSTRUCTION

STATE OF TEXAS
C. D. BILLS
83877
LICENSED
PROFESSIONAL ENGINEER

C.D. Bills
9/10/98

Turner Collie & Braden Inc.
ENGINEERS • PLANNERS • PROJECT MANAGERS

AUSTIN | 72-07401-022

Texas Department of Transportation

WOODS POND
WETLAND PLANTING PLAN

CDB		STATE	FEDERAL AID PROJECT NO.			
DLC	6	TEXAS	F257(16)			U.S.183
CWS	STATE DIST. NO.	COUNTY				
DLC	AUS	WILLIAMSON	0151	05	038	-

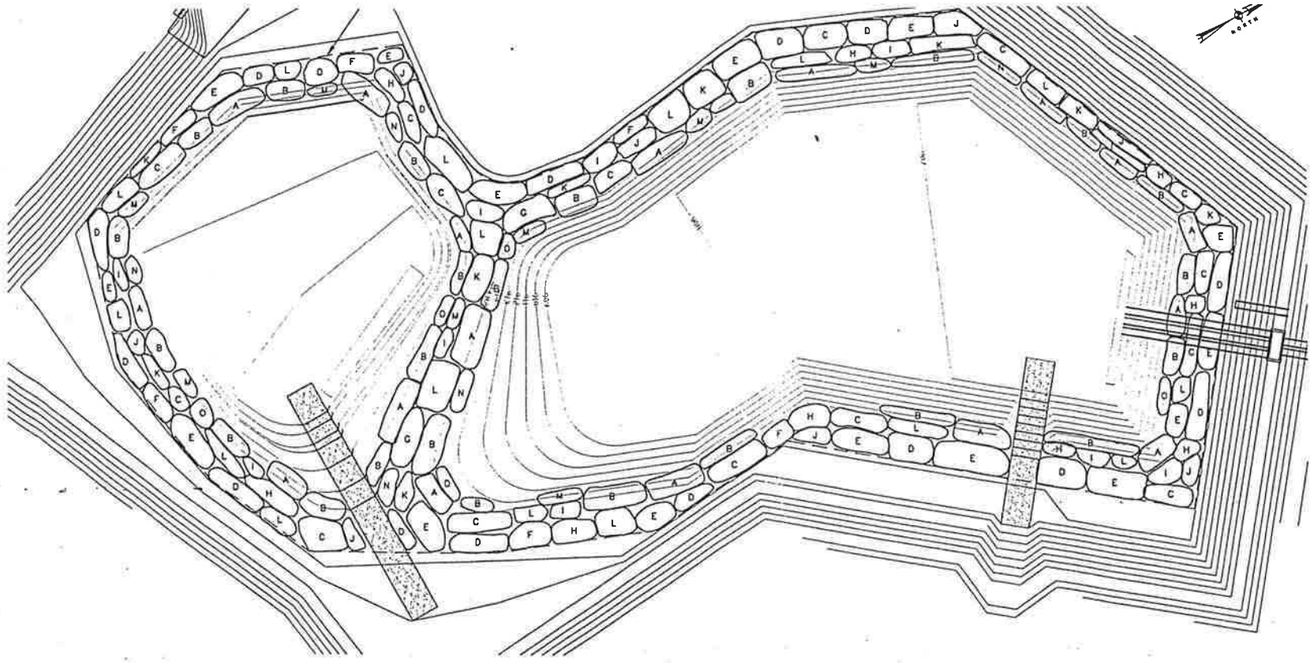

MINIMUM REQUIREMENTS FOR WET POND LANDSCAPING
SCALE: 1"=30'

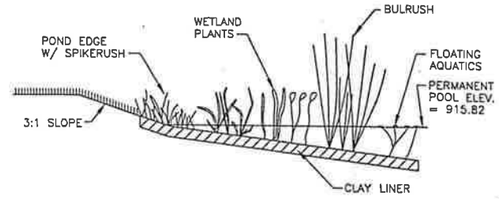

CROSS SECTION OF A TYPICAL VEGETATED BENCH AREA
N.T.S.

MINIMUM REQUIREMENTS FOR WET POND LANDSCAPING

ALL WET POND PLANTS SHALL BE PROPAGATED OR HARVESTED FROM REGIONALLY ADAPTED STOCK WHEN FEASIBLE. THESE ARE PLANT SPECIES OR GENOTYPES WHICH ARE NATIVE TO A RANGE OF WITHIN 250 MILES OF THE PROJECT SITE. WET POND PLANTS SHALL BE INSTALLED AT WATER DEPTHS APPROPIATE FOR THE SPECIES.

WET POND SURFACE AREA = 106,339 SF

MINIMUM PLANT QUANITY = (106,339)(0.03) = 3190

PLANT CATEGORY	RATIO	MIN. REQ'D	MIN. SIZE	BARE ROOT
BULRUSH	40%	1276	2 GALLON	1 BARE ROOT
SPIKERUSH	20%	638	2.8" LINERS	1 BARE ROOT
MARSH DIVERSITY	20%	638	1 GALLON	1 BARE ROOT
ARROWHEAD	10%	319	1 GALLON	1 BARE ROOT
AQUATICS	10%	319	1 GALLON	1 BARE ROOT
PLANTS PROVIDED		3190		

PLANTS PROVIDED

SYMBOL	COMMON NAME	SCIENTIFIC NAME	QUANTITY
A	BULRUSH	SCIRPUS VALIDUS	500
B	BULRUSH	SCIRPUS CALIFORNICUS	530
C	THREE-SQUARE BULRUSH	SCIRPUS AMERICANUS	265
D	SPIKERUSH	ELEOCHARIS MONTEVIDENSIS	320
E	SPIKERUSH	ELEOCHARIS QUADRANGULATA	320
F	FLATSEDGE	CYPERUS OCHRAEUS	90
G	YELLOW FLAG IRIS	IRIS PSEUDACORUS	60
H	SOFT RUSH	JUNCUS EFFUSUS	150
I	WATER WILLOW	JUSTICIA AMERICANA	140
J	WATER CLOVER	MARSILEA MACROPODA	130
K	PICKERELWEED	PONTEDERIA CORDATA L. PICKERELWEED	160
L	ARROWHEAD	SAGGITARIA LATIFOLIA	330
M	COONTAIL	CERATOPHYLLUM spp. COON-TAIL	110
N	FANWORT	NYMPHAEA ORDORATA	110
O	SAGO PONDWEED	POTOMAGETON PECTINATUS	110
			3325

NOT FOR CONSTRUCTION

STATE OF TEXAS
C. D. BILLS
83877
LICENSED
PROFESSIONAL ENGINEER
9/10/98

Turner Collie & Braden Inc.
ENGINEERS • PLANNERS • PROJECT MANAGERS

AUSTIN | 72-07401-022

Texas Department of Transportation

WOODS POND
WETLAND PLANTING PLAN

CDB		STATE	FEDERAL AID PROJECT NO.				
DLG	6	TEXAS	F257(16)				U.S.183
CWS	STATE DIST. NO.	COUNTY	CONTROL NO.	SECTION NO.	JOB NO.		SHEET NO.
DLG	AUS	WILLIAMSON	0151	05	038		-

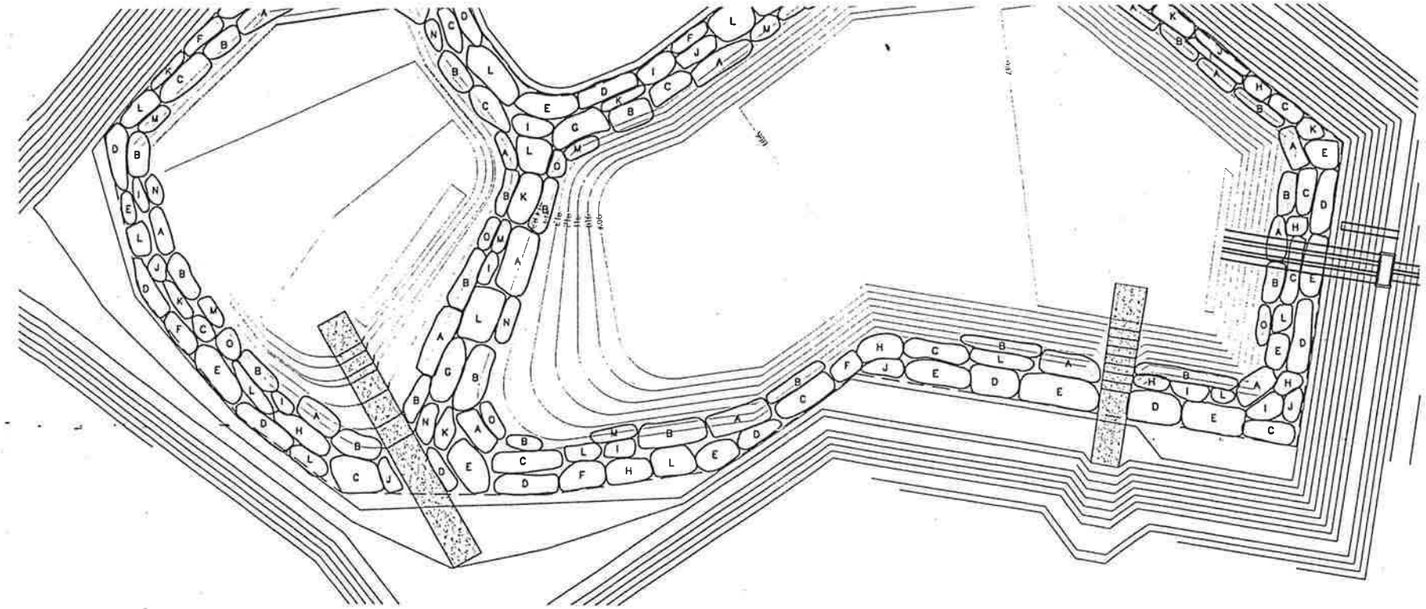

MINIMUM REQUIREMENTS FOR WET POND LANDSCAPING
SCALE: 1"=30'

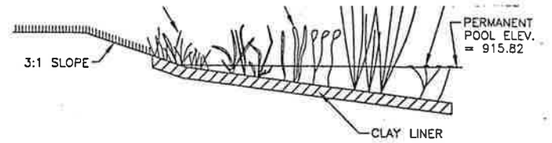

CROSS SECTION OF A TYPICAL VEGETATED BENCH AREA
N.T.S.

MINIMUM REQUIREMENTS FOR WET POND LANDSCAPING

ALL WET POND PLANTS SHALL BE PROPAGATED OR HARVESTED FROM REGIONALLY ADAPTED STOCK WHEN FEASIBLE. THESE ARE PLANT SPECIES OR GENOTYPES WHICH ARE NATIVE TO A RANGE OF WITHIN 250 MILES OF THE PROJECT SITE. WET POND PLANTS SHALL BE INSTALLED AT WATER DEPTHS APPROPIATE FOR THE SPECIES.

WET POND SURFACE AREA = 106,339 SF

MINIMUM PLANT QUANITY = (106,339)(0.03) = 3190

PLANT CATEGORY	RATIO	MIN. REQ'D	MIN. SIZE	BARE ROOT
BULRUSH	40%	1276	2 GALLON	1 BARE ROOT
SPIKERUSH	20%	638	2.5" LINERS	1 BARE ROOT
MARSH DIVERSITY	20%	638	1 GALLON	1 BARE ROOT
ARROWHEAD	10%	319	1 GALLON	1 BARE ROOT
AQUATICS	10%	319	1 GALLON	1 BARE ROOT
PLANTS PROVIDED		3190		

PLANTS PROVIDED

SYMBOL	COMMON NAME	SCIENTIFIC NAME	QUANTITY
A	BULRUSH	SCIRPUS VALIDUS	500
B	BULRUSH	SCIRPUS CALIFORNICUS	530
C	THREE-SQUARE BULRUSH	SCIRPUS AMERICANUS	265
D	SPIKERUSH	ELEOCHARIS MONTEVIDENSIS	320
E	SPIKERUSH	ELEOCHARIS QUADRANGULATA	320
F	FLATSEDGE	CYPERUS OCHRAEUS	90
G	YELLOW FLAG IRIS	IRIS PSEUDACORUS	60
H	SOFT RUSH	JUNCUS EFFUSUS	150
I	WATER WILLOW	JUSTICIA AMERICANA	140
J	WATER CLOVER	MARSILEA MACROPODA	130
K	PICKERELWEED	PONTEDERIA CORDATA L. PICKERELWEED	160
L	ARROWHEAD	SAGGITARIA LATIFOLIA	330
M	COONTAIL	CERATOPHYLLUM spp. COON-TAIL	110
N	FANWORT	NYMPHAEA ORDORATA	110
O	SAGO PONDWEED	POTOMAGETON PECTINATUS	110
			3325

NOT FOR CONSTRUCTION

STATE OF TEXAS
C. D. BILLS
83877
LICENSED
PROFESSIONAL ENGINEER
9/10/98

Turner Collie & Braden Inc.
ENGINEERS • PLANNERS • PROJECT MANAGERS

AUSTIN | 72-07401-022

Texas Department of Transportation

WOODS POND
WETLAND PLANTING PLAN

Designed	CDB	FED. RD. DIV. NO.	STATE	FEDERAL AID PROJECT NO.			SHEET NO.
Drawn	DLG	6	TEXAS	F257(16)			U.S.183
Checked	DWS	STATE DIST. NO.	COUNTY	CONTROL NO.	SECTION NO.	JOB NO.	SHEET NO.
Quantities	DLG	AUS	WILLIAMSON	0151	05	038	-

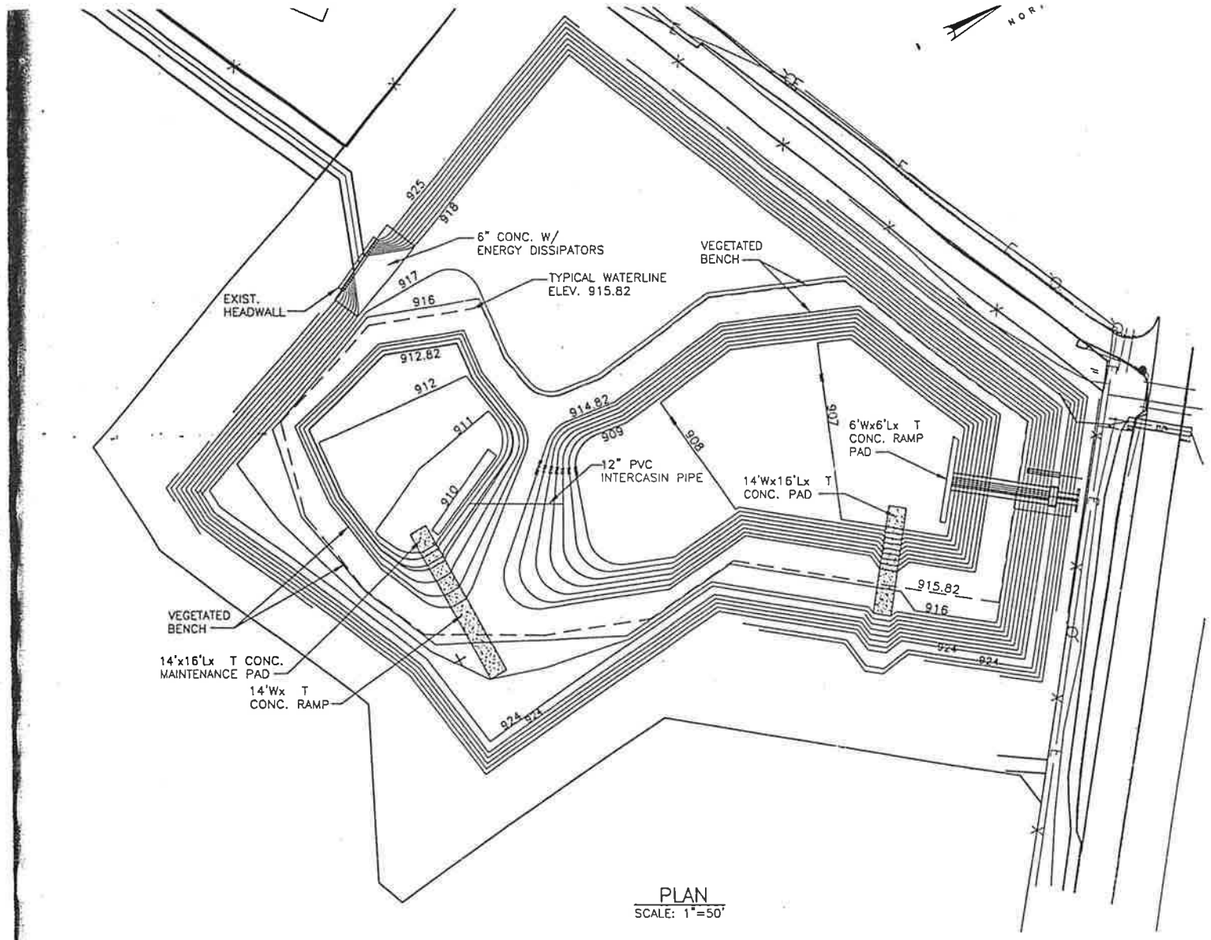

PLAN
SCALE: 1"=50'

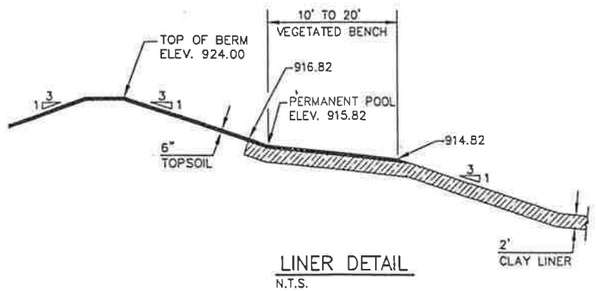

LINER DETAIL
N.T.S.

AREA TREATED = 102.17 ACRES

STATE OF TEXAS
C. D. BILLS
83877
LICENSED
PROFESSIONAL ENGINEER
9/10/98

NOT FOR CONSTRUCTION

Turner Collie & Braden Inc.
ENGINEERS • PLANNERS • PROJECT MANAGERS

AUSTIN | 72-07401-022

Texas Department of Transportation

WOODS POND
WATER QUALITY AND
DETENTION POND
PLAN AND DETAILS

Designed	CDB		STATE	FEDERAL AID PROJECT NO.			SHEET NO.
Detailed	DLG	8	TEXAS	F257(16)			U.S.183
Checked	GWS	STATE DIST. NO.	COUNTY	CONTROL NO.	SECTION NO.	JOB NO.	DIST. NO.
Revised	DLG	AUS	WILLIAMSON	0151	05	035	-

Turner Collie & Braden Inc.
Engineers • Planners • Project Managers

COMPUTATION SHEET

SUBJECT US 183 Sect 1 Update
WOODS TRACT POND
JOB NO. ____ SHEET NO. 1 OF 1
BY CDB DATE 5/28/98
CHKD BY ____ DATE ____

ORIGINAL CALCS

Wet Pond

$V = 0.162 * R_f * DA$

Table 1.9 pg 1-202 COA ENV'L Manual
- I.W/ 63.05% Impervious Cover, Recharge
R_f = 0.401 to .453

$\frac{.453 - .405}{.05} = \frac{.453 - x}{0.0195}$ · $x = 0.434$

according to COA Environmental Manual
p. 1-169 – 1' C.I. can leave out WOODS property in WQ calcs because. WOODS will treat it

PERM POOL VOL.

$V = (0.162)(.434)(102.17) = 7.185$ ac-ft 312,908.78 CF

Permanent Pool 2 compartments
Sediment forebay
Main Pool

SEDIMENT FOREBAY – 15% - 25% of permanent vol.
- 14'-6" deep
- vegetative benches (entire Perm Pool will have this)
- min 2% slope towards a low point
- reinforced conc. pad – 12' by 16'
- 12' conc. maintenance Ramp 4:1 leave at least 12" above perm pool elev to maintenance pad

use 0.20% as starting point
(0.20)(7.183) = 1.4366 ≈ 1.437 ac-ft

Turner Collie & Braden Inc.
Engineers • Planners • Project Managers

COMPUTATION SHEET

SUBJECT US 183 Sect 1 Update - Woods Tract Pond
JOB NO. _____ SHEET NO. 2 OF _____
BY CDB DATE 5/28/98
CHKD BY _____ DATE _____

consider vegetative bench 20% of the total pond area
min 10' wide
S = 5 to 15%
max inundation of 18"

if use 1.5'



want 20' wide

$\frac{1.5'}{20'}$ = 7.5% slope

use min 5% slope

(20)(.05) = 1'

SEE A TYPICAL X-SECTION OF POND page 3

FOR CONTOURING:
end of pond - detention elev

264

916 - (.30% * 60) = 915.82

915.82 - (5% * 20') = 914.82

even contours
915 - 914.82 = .18
× 20
3.6'

5% = 20:1

Main Pool vol = 7.183 − 1.437 = 5.746 acft - includes veg. bench

Turner Collie & Braden Inc.
Engineers • Planners • Project Managers

COMPUTATION SHEET

SUBJECT _____

JOB NO. _____ SHEET NO. 3 OF _____

BY _____ DATE 5/28/99

CHKD BY _____ DATE _____

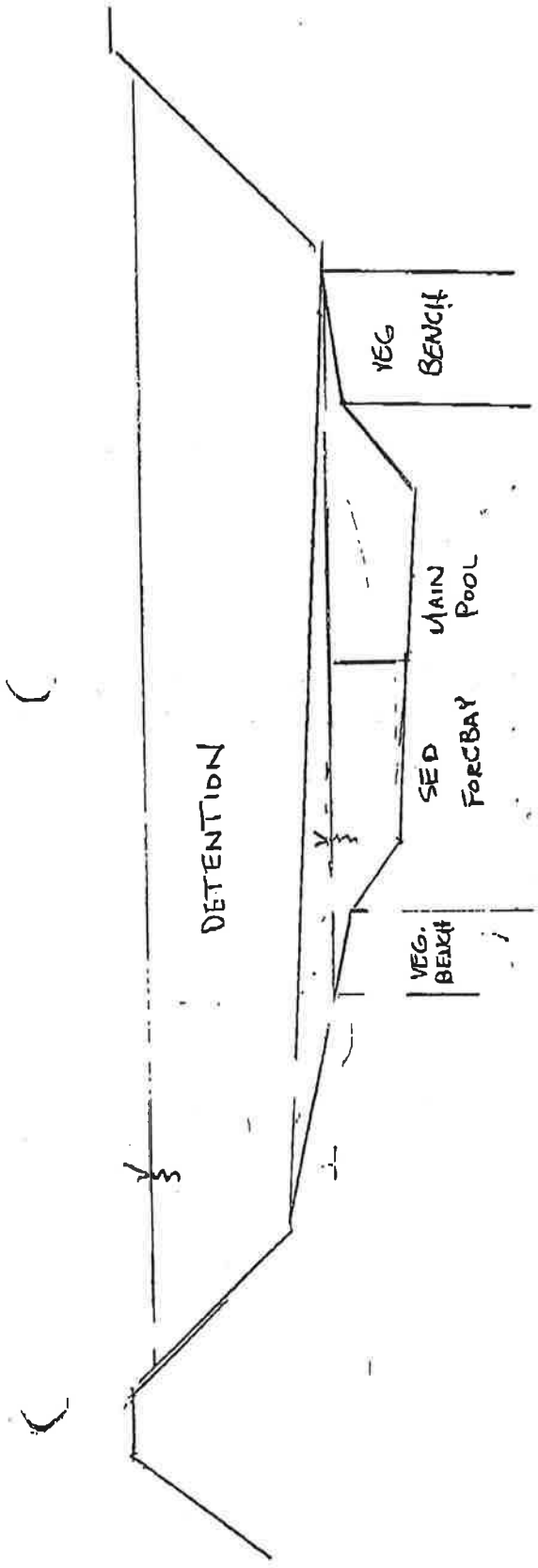

Turner Collie & Braden Inc.
Engineers • Planners • Project Managers

COMPUTATION SHEET

SUBJECT _____

JOB NO. _____ SHEET NO. 4 OF _____

BY _____ DATE 5/20/98

CHKD BY _____ DATE _____

Rough Est

Main Pool L≅ 277

So will drop 277 * .01 = 2.77' over length

don't want deeper than 8'

if start w/ 5' depth

5 to 7.65'

914.82

SEDIMENT FOREBAY

L= ?

1.437 ac-ft

5' avg depth

0.2874 ac = 12,519 SF

if L = 120'

W = 104.325'

Outfall @ elev - 917.77

Slope @ 0.30% for 20'

917.77 - (20.* .30%) = 917.71

If use 20:1 917.71 - 914.82 = 2.89 = 57.8 ft

too long

Want flow to spread out.

use Slope @ 0.30% for 30' 917.77 - (30 * .30%) = 917.68

Slope 3:1 to 915.82 — 917.68 - 915.82 = 1.86

Turner Collie & Braden Inc.
Engineers • Planners • Project Managers

COMPUTATION SHEET

SUBJECT _____

JOB NO. _____ SHEET NO. 5 OF _____

BY _____ DATE 9/28/98

CHKD BY _____ DATE _____

SED FOREBAY CONT

3:1 slope to 2'-3'

if L = 120

120 x .02 = 2.4' drop

begin w/ 3.32' 914.82 to 911.5. 3.32 x 3 = 9.96

want to put a slight curve in pond to make it more natural looking

& culvert 338.8138

Pond 19.8569

2% slope all directions

down E of pond 911.5 - (120 x .02) = 909.1

need to have center steeper than 2%

need E = 908.8

$$\frac{911.5 - 908.8}{120} = 2.25\%$$

$$\frac{0.5}{2.25\%} = 22.22$$

$$\frac{1}{.0225} = 44.44$$

Turner Collie & Braden Inc.
Engineers • Planners • Project Managers

COMPUTATION SHEET

SUBJECT _____

JOB NO. _____ SHEET NO. 6 OF _____

BY _____ DATE 5/28/98

CHKD BY _____ DATE _____

45'

Reuse Sed. Forbay

use S = 0.30% for 15' - (Energy dissipators ect.)

918 - 917.77 = 0.23

3(.23) = 0.69

917.77 - (15 * .30%) = 917.73'

3:1 slope to veg. bench

917.73 - 915.82 = 1.91

1.91 * 3 = 5.73

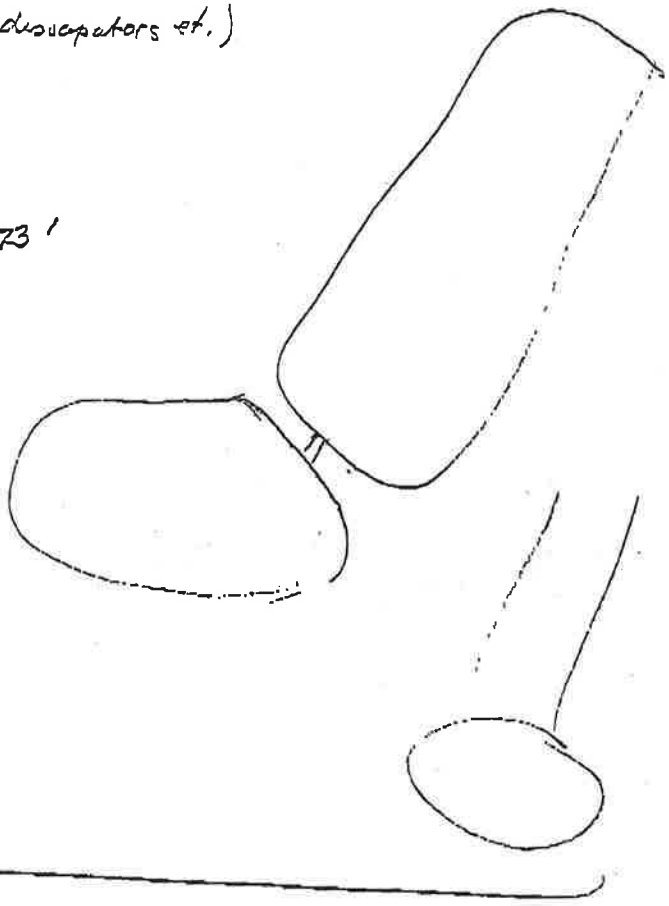

6/2/98

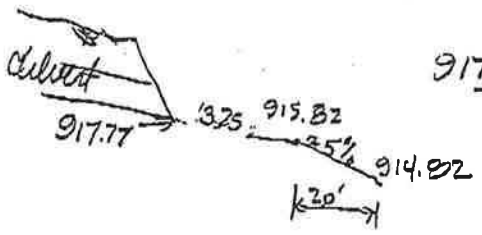

$\frac{917.77 - 915.82}{60} = 3.25\%$ 30.77 : 1

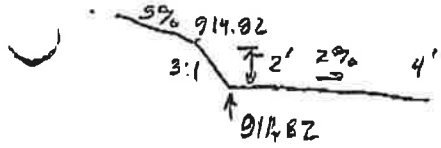

$\frac{911.82 - 911}{x} = .02$ $x = 41$

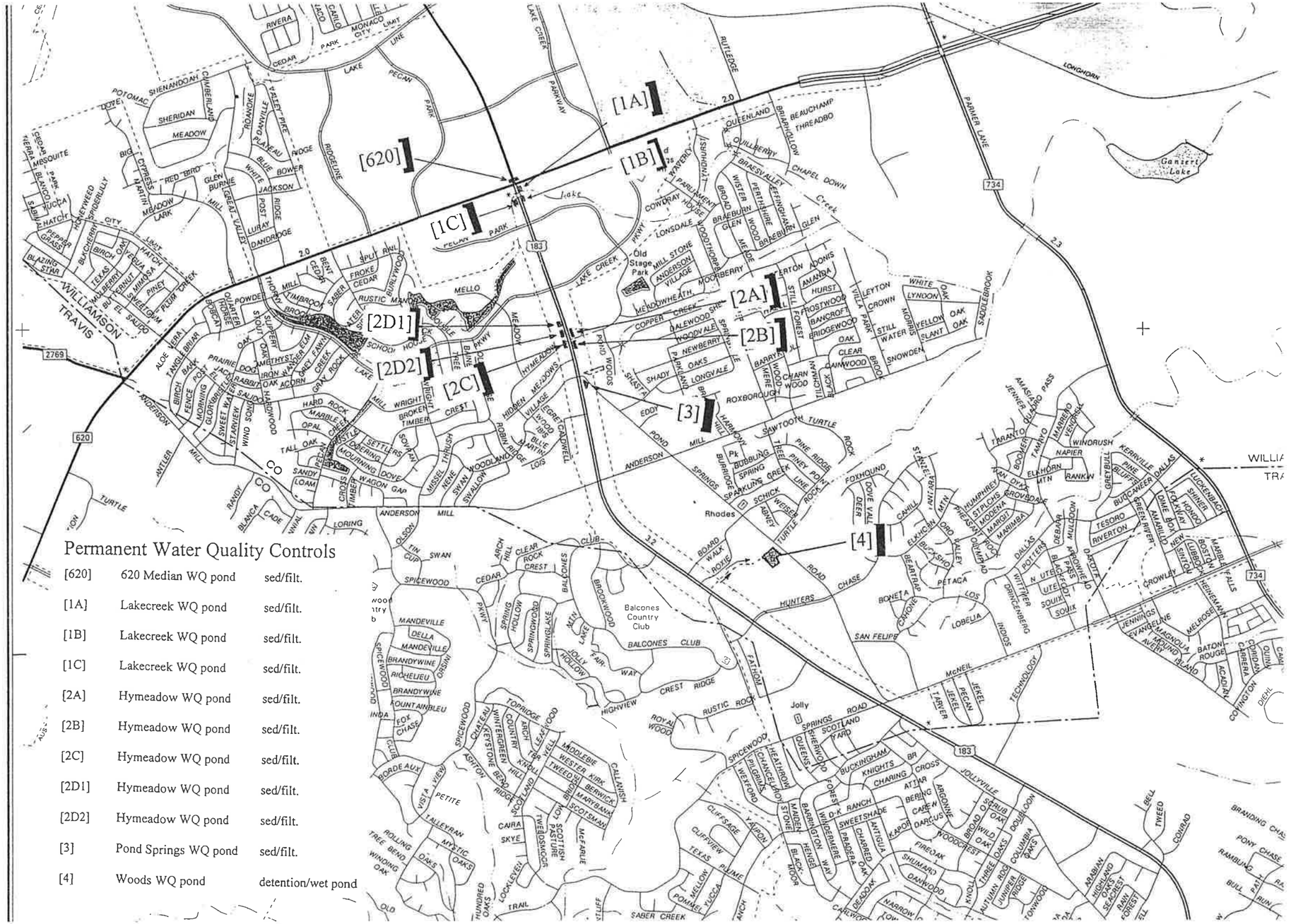
[620]
[1A]
[1B]
[1C]
[2A]
[2B]
[2C]
[2D1]
[2D2]
[3]
[4]
WILLIAMSON
TRAVIS
Lake Creek
Lake Creek Parkway
Ridgeline
Lake Pecan Park
Rutledge
Parmer Lane
Longhorn
Gaisert Lake
Creek
Old Stage Park
Balcones Country Club
Rhodes
Jolly
Springs
Road
Anderson Mill
Anderson Springs
Pond Springs
Hunters Chase
San Felipe
Board Walk
Roxie
Eddy
Roxborough
Sawtooth
Turtle Rock
Foxhound
Dove Vale
Deer Run
Fathom
Crest Ridge
Rustic Rock
Highview
Jolly Springs
Scotland Yard
Buckingham
Knights Cross
Charing Cross
Atlar
Bering
Argonne
Darcus
Jollyville
Technology
McNeil
Jekel
Pecan
Tarver
Lyndon B. Johnson
Rutledge
Parliament
Lynnhurst
Lonsdale
Woodthorpe
Meadowheath
Copperfield
Woodvale
Parkland
Longvale
Shady Oaks
Newberry
Barrywood
Charnwood
Tillcrest
Black Oak
Clear Oak
Bridgewood
Bancroft
Frostwood
Hurst
Amanda
Adonis
Leyton
Crown
Willa Park
Still Water
Morris
Yellow Slant
Oak
Lynoon
White Oak
Snowden
Brook
Skoolebrook
Forest
Still Water
Mello Meadow
Hymeadows
Village Green
Wood Blue
Robin Ridge
Caldwell
Lois
Missel Thrush
Swan
Woodland
Swallow
Wagon Gap
Cross Timber
Sandy Loam
Settlers
Mourning Dove
Tall Oak
Opal
Marble Creek
Hard Rock
Wind Song
Starview
Sweet Water
Morning Glory
Fence Post
Birch Bark
Aloe Vera
Tangle Briar
Prairie Dog
Rabbit
Iron Weed
Acorn
Gray Rock
Shell Fan
Creek
Lake
Hardwood
Wright
Broken Timber
Crest
Hidden Meadows
Village
Secret Wood
Blue Larkspur

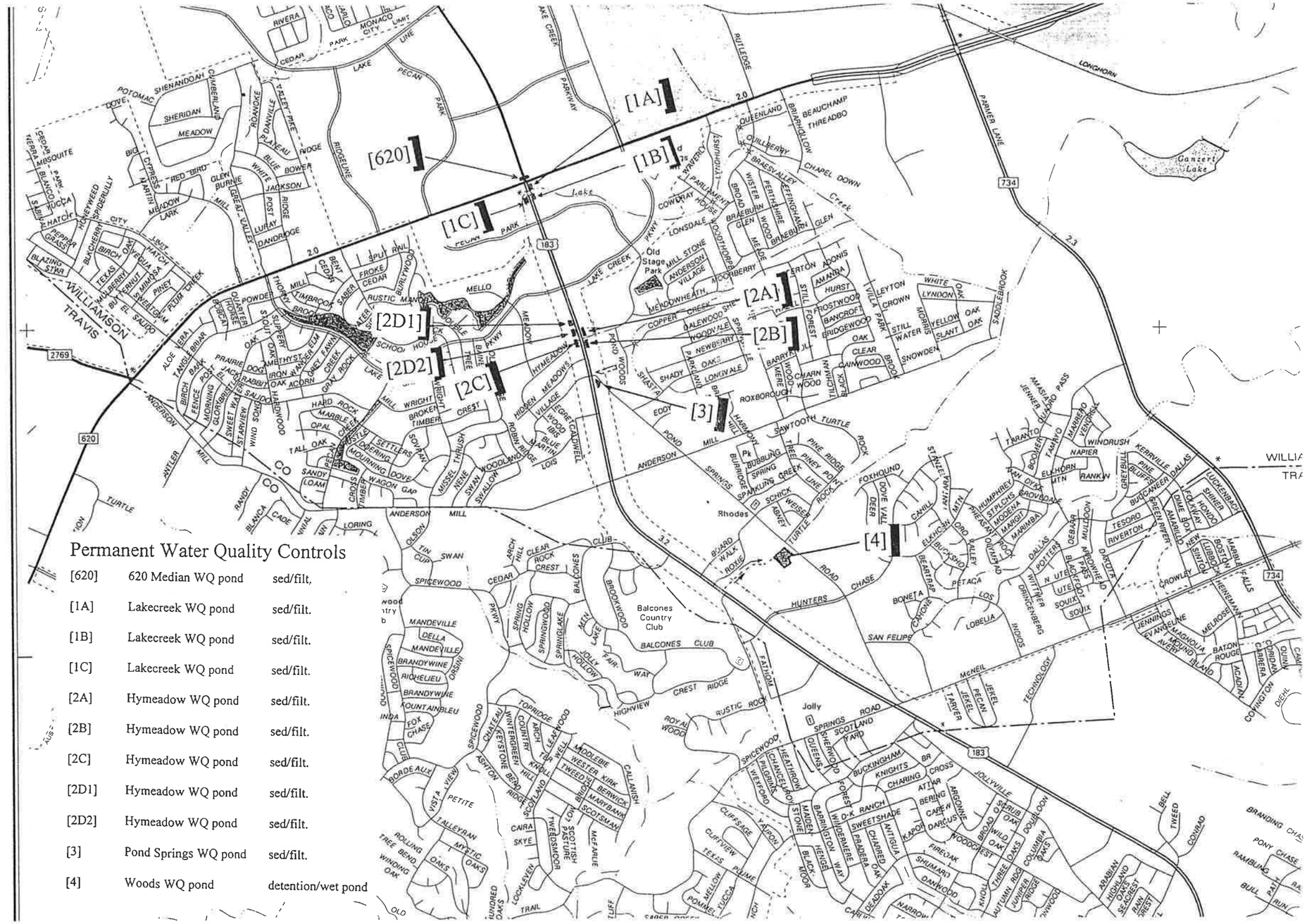

Permanent Water Quality Controls

[620]	620 Median WQ pond	sed/filt.
[1A]	Lakecreek WQ pond	sed/filt.
[1B]	Lakecreek WQ pond	sed/filt.
[1C]	Lakecreek WQ pond	sed/filt.
[2A]	Hymeadow WQ pond	sed/filt.
[2B]	Hymeadow WQ pond	sed/filt.
[2C]	Hymeadow WQ pond	sed/filt.
[2D1]	Hymeadow WQ pond	sed/filt.
[2D2]	Hymeadow WQ pond	sed/filt.
[3]	Pond Springs WQ pond	sed/filt.
[4]	Woods WQ pond	detention/wet pond

Turner Collie & Braden Inc.

MEETING MINUTES

RECEIVED
JUL 23 1997
TNRCC-Field Operations
Austin Region 11

Subject: U.S. 183 Drainage, System 5
Job No.: 73-07401-011

Place: TxDOT Austin District Design Office
Date & Time: 6/30/97

Attendees: Wes Burford, Gary Lantrip, Christine Ellington, Glenn Kunze, Ben West, Connie Bills

Preparer: Connie Bills CB Date: 7/18/97

The purpose of the meeting was to discuss the use of the wet pond for the detention and water quality treatment of U.S. 183 System 5's runoff. TC&B showed the pond layout on the Woods property to Christine Ellington of the TNRCC. We noted that all calculations were based on the City of Austin's proposed rules - additions to the COA's Environmental Criteria Manual Sections 1.6.3, 1.6.4, 1.6.6 and 1.6.10. We did not get into design specifics, but mainly discussed the concept. It was emphasized that we wanted to get her opinion concerning TNRCC approval of the use of a wet pond for permanent water quality control for System 5 and possibly other proposed outfalls along U.S. 183. If the concept was approved, then we would keep a line of communication open with her on the design details.

A copy of the proposed rules and the wet pond layout were given to Ms. Ellington to review. She said that she would get back to us with comments during the next week.

Spoke w/Gary ≃ 7/7 & told him that I couldn't see any problems at a glance. He said that he would contact TC&B.

cc: Attendees
Files
Larry Galfione

AGENDA

US 183 Update Status Meeting
TCB Job No. 72-07401-022
Time: 10:00 a.m.
Date: 6/23/98
Location: TxDOT

1. Water Quality Ponds

   a. System 5 (Woods Pond north of Hunter's Chase) - Wet Pond

   b. System 3 (Pond Springs) - Conventional Sedimentation and Filtration

   c. System 2 (Hymeadow) - Underground Sedimentation and Filtration

   d. System 1 South (Lake Creek) - Underground Sedimentation and Filtration

   e. System 1 North (620) - Conventional Sedimentation and Filtration

2. Water Quality Discussion/Q & A

3. Misc.

   a. Update of Systems 3 & 5 Drainage Areas

   b. West Cow Path Drainage Areas

   c. Status of Parcel 311 (Woods Tract)

   d. Schedule for Woods Culvert PS&E

TNRCC - CODE SHEET FOR EDWARDS AQUIFER INSPECTIONS

GENERAL INFORMATION

PROJECT NAME: TXDOT-U.S.183 I.D. NO. 98120101
REGION: 1 1
COUNTY CODE:
- ☐ 105 - Hays
- ☐ 227 - Travis
- ☒ 246 - Williamson
- ☐ 015 - Bexar
- ☐ 046 - Comal
- ☐ 136 - Kinney
- ☐ 163 - Medina
- ☐ 232 - Uvalde

TYPE OF INSPECTION:
- ☒ EAP - Plan Review
- ☐ EAF - Follow-up
- ☐ N/A - No Inspection

476-6595

INSPECTOR'S INITIALS: C L E

☒ REG — REGION APPROVAL/DENIAL OF PLAN

TYPE APPLICATION:
- ☒ NEW
- ☐ MOD - Modification
- ☐ EXC - Exception

TYPE PLAN:
- ☐ WPA - Water Pollution Abatement
- ☐ SCS - Sewage Collection System
- ☐ AST - Aboveground Storage Tank
- ☐ UST - Underground Storage Tank

12/01/98 DATE PLAN RECEIVED (MMDDYY)

12/02/98 DATE DETERMINED ADMINISTRATIVELY COMPLETE
- ☐ NA/01- Plan Incomplete
- ☐ NA/02 - Fee Not Paid

DATE PLAN RETURNED __/__/__
DATE RESPONSE DUE __/__/__
DATE RESPONSE REC'D __/__/__
RESPONSE ADEQUATE ☐ YES ☐ NO

12/15/98 DATE OF INSPECTION
- ☐ NA/01 - Plan Incomplete
- ☐ NA/02 - Fee Not Paid

01/14/99 DATE OF LETTER ☐ N/A

DECISION:
- ☒ APP - Approved
- ☐ DEN - Denied

☐ INI ☐ FOL — SITE INSPECTIONS

INSPECTOR'S INITIALS: ___ ___ ___

__/__/__ DATE OF INSPECTION
__/__/__ DATE OF REPORT

☐ TXD — TXDOT WATER POLLUTION ABATEMENT PLAN

TYPE APPLICATION:
- ☐ NEW
- ☐ MOD - Modification
- ☐ EXC - Exception

TYPE PLAN:
- ☐ TXD - TXDOT Water Pollution Abatement Plan

__/__/__ DATE PLAN RECEIVED
__/__/__ DATE OF INSPECTION
__/__/__ DATE FINDINGS SENT TO TXDOT LIAISON

TECHNICAL ASSISTANCE/OTHER LETTERS

☐ TEC ☐ NOV ☐ RFI ☐ CAR ☐ CLR

DATE OF REQUEST __/__/__ DATE RESPONSE DUE __/__/__
DATE LETTER SENT __/__/__ DATE RESPONSE REC'D __/__/__

RESPONSE ADEQUATE ☐ YES ☐ NO

Revised: 8/18/97

Barry R. McBee, *Chairman*
R. B. "Ralph" Marquez, *Commissioner*
John M. Baker, *Commissioner*
Jeffrey A. Saitas, *Executive Director*

TEXAS NATURAL RESOURCE CONSERVATION COMMISSION

Protecting Texas by Reducing and Preventing Pollution

January 14, 1999

Mr. John Roberts
Texas Department of Transportation
12719 Burnet Road
Austin, Texas 78758

Re: Edwards Aquifer, Williamson County
NAME OF PROJECT: U.S. 183 Mainlanes, Frontage Roads and Drainage Improvements; U.S. 183 from Fathom Circle to Lakeline Boulevard; Austin, Texas.
TYPE OF PLAN: Request for Approval of Water Pollution Abatement Plan (WPAP); 30 Texas Administrative Code (TAC) Chapter 213; Edwards Aquifer Protection Program.

Edwards Aquifer Protection Program File No. 98120101

Dear Mr. Roberts:

The Texas Natural Resource Conservation Commission (TNRCC) has completed its review of the WPAP application for the referenced project that was submitted by the Texas Department of Transportation to the Austin Regional Office on December 1, 1998. Final review of the WPAP submittal was completed after comments were received from the City of Austin on January 8, 1999. The WPAP proposed in the application is in general compliance with 30 TAC Chapter 213; therefore, approval of the plan is hereby granted subject to applicable state rules and the conditions in this approval letter. *This approval expires two (2) years from the date of this letter unless, prior to the expiration date, construction has commenced on the project or an extension of time has been requested.*

PROJECT DESCRIPTION

The proposed road project will have an area of 171.7 acres and will consist of upgrading a section of U.S. 183 to a freeway with mainlanes and frontage roads. This will include widening the existing road, constructing frontage roads, and installing bridge structures. The proposed impervious cover for the development is approximately 144.2 acres (84%).

PERMANENT POLLUTION ABATEMENT MEASURES

To prevent pollution of stormwater originating on-site or up-gradient of the site and potentially flowing across and off the site after construction, two full sedimentation/filtration basins, a wet pond, and eight underground sedimentation/filtration basins will be constructed.

GEOLOGY

According to the geologic assessment included with the submittal, no surface features occur on the project site. The Austin Regional Office site inspection of December 15, 1998, revealed the site to be as described in the geologic assessment.

STANDARD CONDITIONS

1. During the course of regulated activities related to this project, the applicant or his agent shall comply with all applicable provisions of 30 TAC Chapter 213, Edwards Aquifer. The applicant shall remain responsible for the provisions and conditions of this approval until such responsibility is legally transferred to another person or entity. At that time, the new person or entity shall assume responsibility for all provisions and conditions of this approval.

2. Any modification to the activities described in the referenced WPAP application following the date of approval may require the submittal of a WPAP to modify this approval, including the payment of appropriate fees and all information necessary for its review and approval.

3. Prior to commencing any regulated activity, the applicant or his agent must notify the Austin Regional Office in writing of the date on which the regulated activity will begin.

4. All contractors conducting regulated activities at the project location shall be provided a copy of this notice of approval. At least one complete copy of the approved WPAP and this notice of approval shall be maintained at the project location until all regulated activities are completed.

5. Temporary erosion and sedimentation (E&S) controls, i.e., silt fences, rock berms, stabilized construction entrances, or other controls described in the approved WPAP, must be installed prior to construction and maintained during construction. Temporary E&S controls may be removed when vegetation is established and the construction area is stabilized. If a water quality pond is proposed, it shall be used as a sedimentation basin during construction. The TNRCC may monitor stormwater discharges from the site to evaluate the adequacy of temporary E&S control measures. Additional controls may be necessary if excessive solids are being discharged from the site.

6. If any sensitive feature is discovered during construction, all regulated activities near the feature must be suspended immediately. The applicant or his agent must immediately notify the Austin Regional Office of the discovery of the feature. Regulated activities near the feature may not proceed until the executive director has reviewed and approved the methods proposed to protect the feature and the aquifer from potential adverse impacts to water quality.

7. At project locations where construction is initiated and abandoned, or not completed, the site shall be returned to a condition such that the aquifer is protected from potential contamination.

8. No wells exist on the site. Any abandoned wells shall be plugged in accordance with 30 TAC Chapter 238 or an equivalent method, as approved by the executive director.

   Any drill holes resulting from core sampling on-site or down-gradient of the site shall be plugged with native soil, from the bottom of the hole to the top of the hole, so as to not allow water or contaminants to enter the subsurface environment.

9. Pursuant to §26.136 of the Texas Water Code, any violations of the requirements in 30 TAC Chapter 213 may result in administrative penalties.

If you have any questions or require additional information, please contact Ms. Christine Connor of the Edwards Aquifer Protection Program of the Austin Regional Office at 512/339-2929.

Sincerely,

Jeffrey A. Saitas, P.E.
Executive Director
Texas Natural Resource Conservation Commission

JAS/clc

cc: Mr. Gary Lantrip, Texas Department of Transportation
Mr. Michael Heitz, Division Director, Watershed Protection Department, City of Austin
The Honorable John Doerfler, County Judge, Williamson County
Mr. Paulo Pinto, R.S., Williamson County & Cities Health District, Georgetown, Texas
Ms. Rosalinda Escalon, TNRCC Field Operations, Austin

Watershed Protection Department
Environmental Resource Management Division

206 E. 9th Street, Suite 16.100
(512) 499-2550

Mailing Address: P.O. Box 1088-WP
Austin, Texas 78767

TO: Christine Connor — **PHONE:** 339-2929

TTNRCC — **FAX:** 339-3795

CC:

FROM: Sylvia Pope — **PHONE:** 499-3429

COA WPD ERM — **FAX:** 499-2846

RE: TXDOT 183 WPAP comments

NUMBER OF PAGES: 4 (including this page)

Thanks for the extension!

I will send the design calcs, etc. with the letter – it is not being sent with this fax.

City of Austin

Founded by Congress, Republic of Texas, 1839
Municipal Building, Eighth at Colorado, P.O. Box 1088, Austin, Texas 78767 Telephone 512/499-200

January 8, 1999

TRANSMITTED VIA FAX

Ms. Patricia Reeh
Edwards Aquifer Protection Program
Austin Region Office
Texas Natural Resource Conservation Commission
1921 Cedar Bend, Suite 150
Austin, TX 78758

Re: Application for Approval of Water Pollution Abatement Plan for TXDOT expansion of US Highway 183 from Fathom Circle to Lakeline Boulevard, Austin, Texas.

Dear Ms. Reeh:

Watershed Protection Department staff have reviewed the application for the above-referenced project. The site is within the Recharge Zone of the Northern Edwards Aquifer and is within the Lake Creek watershed. The following comments are submitted for your consideration.

1. The Water Pollution Abatement Plan (WPAP) did not contain detailed information regarding the location and construction of underground sedimentation/filtration basins and the design calculations for water quality control structures. Connie Bills of Turner, Collie & Braden Inc. provided this information upon our request. A copy of the additional information is provided as an attachment to this letter.

2. The storm water pollution prevention plan (SWPPP) states that excess dirt on the road shall be broomed as needed or as directed by the engineer. The brooming should be conducted with a vacuum broom that removes material rather than a power broom device in order to prevent runoff of residual sediment from the road surface.

3. The maintenance plan for stormwater controls that was included in the application is inappropriate for the underground sedimentation/filtration basins and the proposed wet pond due to the unique requirements for inspection and maintenance of these structures. Please require that TXDOT submit a maintenance plan and schedule specific to the underground sedimentation/filtration basins and a plan specific to the wet pond. We recommend that the structures be inspected monthly, following any rainfall with more than 1 inch of total accumulation, and immediately following the spill or any harmful substance that may have entered the stormsewer system. If a roadway spill occurs that results in a release to an underground sedimentation/filtration basin, then the basin chambers should be inspected and tested to determine if removal of the filtration material is warranted.

4. A device to capture trash should be placed at the inlet to the underground sedimentation/filtration basins. Accumulated debris and trash should be removed from these devices on a routine basis.

5. The wet pond design and sizing equations used appear to be appropriate for this type of water quality control structure.

6. The maintenance plan for the wet pond should include a description of vegetation maintenance, nuisance vegetation removal, provisions for providing make-up water in the event of drought, and a procedure describing how to measure accumulated sediment and determining when to remove it.

7. The sedimentation/filtration basins have been designed using the recommended capture rates proposed in the Draft TNRCC Technical Guidance Manual for Permanent Structural BMPs. According to the WPAP, the project capture volumes and load reductions meet or exceed the criteria for capture of the first one-half inch of stormwater runoff. The City of Austin commends TXDOT for being proactive in the design of the stormwater controls to comply with the adopted Edwards Rules but would like to suggest that TXDOT consider using sizing criteria presented in our Environmental Criteria Manual (ECM). These suggestions are as follows:

Water Quality Volume (WQV) for Sedimentation-Sand Filtration Systems – The WQV should increase by 0.10" for each 10% increase in impervious cover over 20%. The criteria currently being used for ponds in Austin is:

Impervious Cover	Water Quality Volume (inches)
≤ 20%	0.50
30%	0.60
40%	0.70
50%	0.80
60%	0.90
70%	1.00
80%	1.10
90%	1.20
100%	1.30

Based on a review of the drainage area information, volumes of between 0.85 and 1.15" would be more appropriate.

Sedimentation-Sand Filtration Surface Areas – When sizing the sedimentation and filtration basin surface areas, the equations referred to in the WPAP assume that all ponds will be of the "full" sedimentation-filtration design, which requires an extended detention outlet from the sedimentation pond to the filtration basin. If only a gabion wall is placed between the two, this is considered to be a "partial" sedimentation-filtration design, and a larger sand bed area is required (but the overall surface area of the system is not larger). For partial systems the sizing equations are:

$As = WQV * (1/Ds - 1/10)$
$Af = WQV/10$

Where:
As = surface area (square feet) of the sedimentation chamber (basin);
Af = surface area (square feet) of the filtration basin;
WQV = water quality volume (cubic feet); and
Ds = depth of the sedimentation chamber (basin) (feet).

These suggestions are presented in light of the high impervious cover noted for the project, recognizing that the TGM criteria would result in more frequent bypasses of untreated stormwater in this impervious cover range. Also, the Draft TGM has not received final approval by the TNRCC and therefore; the most protective approved criteria (COA ECM) is suggested.

8. The proposed wet pond in the vicinity of Roxie Drive is likely to intercept the water table under high rainfall conditions as indicated by recent construction problems encountered during construction of a wastewater line along Roxie Drive. The water table was located at a depth of approximately 12 feet below ground surface directly behind the Southwestern Bell building. A void horizon occurs at this depth and likely conveys flow laterally towards the Pond Springs area that occurs south of Anderson Mill Road east of the Turtle Rock area.

Thank you for the opportunity to review and comment on these plans. Please feel free to contact Sylvia Pope at 499 - 3429 or me at 499-2224 if you have any questions regarding these comments.

Sincerely,

Edward D Peacock

Edward D. Peacock, P.E.
Section Manager, Water Resources Evaluation
Environmental Resources Management Division
Watershed Protection Department

cc: Central Files
Nancy L. McClintock, Division Manager, Environmental Resources Management
Sylvia Pope, Hydrogeologist, ERM, WRE
Pat Hartigan, ERM, Watershed Management
Chuck Lesniak, ERM, Water Quality Regulations

Barry R. McBee, *Chairman*
R. B. "Ralph" Marquez, *Commissioner*
John M. Baker, *Commissioner*
Jeffrey A. Saitas, *Executive Director*

TEXAS NATURAL RESOURCE CONSERVATION COMMISSION

Protecting Texas by Reducing and Preventing Pollution

December 2, 1998

Mr. Michael Heitz, AIA, Division Director
Watershed Protection Department
P.O. Box 1088
Two Commodore Plaza, 17th Floor
Austin, TX 78767

Re: Edwards Aquifer, **Williamson County**
Project name: **TXDOT-US Highway 183;** US 183 from Fathom Circle to Lakeline Blvd; Austin, Texas.
Plan Type: Application for Approval of Water Pollution Abatement Plan (WPAP); 30 Texas Administrative Code (TAC) Chapter 213; Edwards Aquifer Protection Program.

Dear Mr. Heitz :

The enclosed PAP application is being forwarded to you pursuant to the Edwards Aquifer Protection Rules. The Texas Natural Resource Conservation Commission (TNRCC) is required by 30 TAC Chapter 213 to provide copies of all applications to affected incorporated cities and underground water conservation districts for their comments prior to TNRCC approval.

Please forward your comments to this office by **January 2, 1999.**

Should you have any questions concerning this matter, please contact a representative of the Edwards Aquifer Protection Program at the Austin regional office (512) 339-2929.

Sincerely,

Patricia M. Reeh
Water Section Manager
Austin Regional Office

PMR/neg

Enclosure

Watershed Protection Department
Environmental Resource Management Division

206 E. 9th Street, Suite 16.100
(512) 499-2550

Mailing Address: P.O. Box 1088-WP
Austin, Texas 78767

TO: Christine Connor — **PHONE:** 339-2929

TNRCC — **FAX:** 339-3795

CC:

FROM: Sylvia Pope — **PHONE:** 499-3429

COA WPD ERM — **FAX:** 499-3846

RE: TXDOT 183 WPAP comments

NUMBER OF PAGES: 4 (including this page)

Thanks for the extension!

I will send the design calcs, etc. with the letter – it is not being sent with this fax.

City of Austin

Founded by Congress, Republic of Texas, 1839
Municipal Building, Eighth at Colorado, P.O. Box 1088, Austin, Texas 78767 Telephone 512/499-2000

January 8, 1999

TRANSMITTED VIA FAX

Ms. Patricia Reeh
Edwards Aquifer Protection Program
Austin Region Office
Texas Natural Resource Conservation Commission
1921 Cedar Bend, Suite 150
Austin, TX 78758

Re: Application for Approval of Water Pollution Abatement Plan for TXDOT expansion of US Highway 183 from Fathom Circle to Lakeline Boulevard, Austin, Texas.

Dear Ms. Reeh:

Watershed Protection Department staff have reviewed the application for the above-referenced project. The site is within the Recharge Zone of the Northern Edwards Aquifer and is within the Lake Creek watershed. The following comments are submitted for your consideration.

1. The Water Pollution Abatement Plan (WPAP) did not contain detailed information regarding the location and construction of underground sedimentation/filtration basins and the design calculations for water quality control structures. Connie Bills of Turner, Collie & Braden Inc. provided this information upon our request. A copy of the additional information is provided as an attachment to this letter.

2. The storm water pollution prevention plan (SWPPP) states that excess dirt on the road shall be broomed as needed or as directed by the engineer. The brooming should be conducted with a vacuum broom that removes material rather than a power broom device in order to prevent runoff of residual sediment from the road surface.

3. The maintenance plan for stormwater controls that was included in the application is inappropriate for the underground sedimentation/filtration basins and the proposed wet pond due to the unique requirements for inspection and maintenance of these structures. Please require that TXDOT submit a maintenance plan and schedule specific to the underground sedimentation/filtration basins and a plan specific to the wet pond. We recommend that the structures be inspected monthly, following any rainfall with more than 1 inch of total accumulation, and immediately following the spill or any harmful substance that may have entered the stormsewer system. If a roadway spill occurs that results in a release to an underground sedimentation/filtration basin, then the basin chambers should be inspected and tested to determine if removal of the filtration material is warranted.

4. A device to capture trash should be placed at the inlet to the underground sedimentation/filtration basins. Accumulated debris and trash should be removed from these devices on a routine basis.

5. The wet pond design and sizing equations used appear to be appropriate for this type of water quality control structure.

6. The maintenance plan for the wet pond should include a description of vegetation maintenance, nuisance vegetation removal, provisions for providing make-up water in the event of drought, and a procedure describing how to measure accumulated sediment and determining when to remove it.

7. The sedimentation/filtration basins have been designed using the recommended capture rates proposed in the Draft TNRCC Technical Guidance Manual for Permanent Structural BMPs. According to the WPAP, the project capture volumes and load reductions meet or exceed the criteria for capture of the first one-half inch of stormwater runoff. The City of Austin commends TXDOT for being proactive in the design of the stormwater controls to comply with the adopted Edwards Rules but would like to suggest that TXDOT consider using sizing criteria presented in our Environmental Criteria Manual (ECM). These suggestions are as follows:

Water Quality Volume (WQV) for Sedimentation-Sand Filtration Systems – The WQV should increase by 0.10" for each 10% increase in impervious cover over 20%. The criteria currently being used for ponds in Austin is:

Impervious Cover	Water Quality Volume (inches)
≤ 20%	0.50
30%	0.60
40%	0.70
50%	0.80
60%	0.90
70%	1.00
80%	1.10
90%	1.20
100%	1.30

Based on a review of the drainage area information, volumes of between 0.85 and 1.15" would be more appropriate.

Sedimentation-Sand Filtration Surface Areas – When sizing the sedimentation and filtration basin surface areas, the equations referred to in the WPAP assume that all ponds will be of the "full" sedimentation-filtration design, which requires an extended detention outlet from the sedimentation pond to the filtration basin. If only a gabion wall is placed between the two, this is considered to be a "partial" sedimentation-filtration design, and a larger sand bed area is required (but the overall surface area of the system is not larger). For partial systems the sizing equations are:

$As = WQV * (1/Ds - 1/10)$
$Af = WQV/10$

Where:
As = surface area (square feet) of the sedimentation chamber (basin);
Af = surface area (square feet) of the filtration basin;
WQV = water quality volume (cubic feet); and
Ds = depth of the sedimentation chamber (basin) (feet).

These suggestions are presented in light of the high impervious cover noted for the project, recognizing that the TGM criteria would result in more frequent bypasses of untreated stormwater in this impervious cover range. Also, the Draft TGM has not received final approval by the TNRCC and therefore; the most protective approved criteria (COA ECM) is suggested.

8. The proposed wet pond in the vicinity of Roxie Drive is likely to intercept the water table under high rainfall conditions as indicated by recent construction problems encountered during construction of a wastewater line along Roxie Drive. The water table was located at a depth of approximately 12 feet below ground surface directly behind the Southwestern Bell building. A void horizon occurs at this depth and likely conveys flow laterally towards the Pond Springs area that occurs south of Anderson Mill Road east of the Turtle Rock area.

Thank you for the opportunity to review and comment on these plans. Please feel free to contact Sylvia Pope at 499 - 3429 or me at 499-2224 if you have any questions regarding these comments.

Sincerely,

Edward D Peacock

Edward D. Peacock, P.E.
Section Manager, Water Resources Evaluation
Environmental Resources Management Division
Watershed Protection Department

cc: Central Files
Nancy L. McClintock, Division Manager, Environmental Resources Management
Sylvia Pope, Hydrogeologist, ERM, WRE
Pat Hartigan, ERM, Watershed Management
Chuck Lesniak, ERM, Water Quality Regulations

TurnerCollie & Braden Inc.
Engineers • Planners • Project Managers

400 West 15th Street
Suite 500
Austin, Texas 78701
(512) 472-4519
Fax (512) 472-7519
E-Mail: tcbaus@io.com

RECEIVED
JAN 15 1999
TNRCC-Field Operations
Austin Region 11

TO: Sylvia Pope	FAX# 499-2846
FROM: Connie Bills	PHONE: 512-472-4519 FAX: 512-472-7519
DATE: 1/7/99	COVER + 22 PAGE(S)
REGARDING:	

MESSAGE

Include are the pond calcs for System 1 & 2.
I will send 3 & 5 as I gather them.

Connie Bills

Turner Collie & Braden Inc.
Engineers • Planners • Project Managers

COMPUTATION SHEET

SUBJECT US 183 SEC 1
POND 1A (LAKECREEK)
JOB NO. 7207401022 SHEET NO. ____ OF ____
BY RAB DATE 9-9-98
CHKD BY ____ DATE ____

POND 1A

POND WIDTH = 30 FT
TOTAL LENGTH = 158.33 HT OVER WEIR = 2.0 FT

SPLITTER BOX = 18 X 21 FT

DROP FROM SPLITTER BOX TO SED POND = 1.5 FT

SED POND LENGTH = 118 FT

FILTER POND LENGTH = 29 FT

POND DEPTH = 5 FT

TOP OF PROP GROUND = 924.5

FL OF 7'x4' RCP INTO SPLITTER BOX = 914.28

914.28 - 1.5 = 912.78 FL S.P @ BEG ⑤

912.78 + 5 = 917.78 TOP OF WEIR / TOP OF WATER ELEV IN POND

917.78 + 2 = 919.78 SOFFIT OF POND

919.78 + 2.5 = 922.28 TOP OF POND
(2.5 = TOP THICKNESS)

924.5 - 922.28 = 2.22 FT COVER @ LOWEST POINT

914.28 + 4 = 918.28 SOFFIT OF 7'x4'

918.28 + 8" = 918.95 TOP OF 7'x4'

918.95 < 919.78

917.78 - 914.28 = 3.5' HT OF WEIR

Turner Collie & Braden Inc.
Engineers • Planners • Project Managers

COMPUTATION SHEET

SUBJECT US 183 SEC 1 C
POND 1A
JOB NO. 720740 1022 SHEET NO. ____ OF ____
BY RAB DATE 9-9-98
CHKD BY ____ DATE ____

WATER QUALITY CALS

AREAS

0.22 0.31 0.12 0.23 0.27 0.60
1D-67, 1D-68, 1D-72, 1D-71, 1D-70 1D-69 = 1.75

0.77 0.66 0.16 0.16 0.05 0.05 0.16 0.23
1A-53, 1A-54, 1A-55, 1A-57, 1A-58, 1A-59, 1A-60, 1A-61,
0.49 0.17 0.23 0.31 0.60 0.23 0.55 0.27 0.23 0.76
1A-63, 1A-64, 1A-65, 1A-66, 1A-67, 1A-68, 1A-69, 1A-70, 1A-71, 1A-72
0.74
1A-73, ... = 6.82 AC

$A_T = 8.57$ AC

AREA TREATED IN POND 1A

@ 1A-64 TO 1A 73 125.71
@ 1A-71 TO 1A 73 22.40
@ 1D-72 TO 1D73 16.20
164.31 CFS

125.71
+ 16.20
141.91 CFS

148.50
+ 16.20
164.70

$Q = \left(\frac{1.486}{n} A R^{2/3}\right) S^{1/2}$

C

for n = 0.012

4'x4' C = 1990
S = 0.40%
Q = 125.86

S = 0.60%
Q = 166.5

5'x4' C = 2660
S = 0.40%
Q = 168.23

S = 0.30%
Q = 145.69

Turner Collie & Braden Inc.
Engineers • Planners • Project Managers

COMPUTATION SHEET

SUBJECT US 183 Sec 1 Sys 1
WQP's - N. of LAKE CREEK
JOB NO. _____ SHEET NO. 1 OF _____
BY CDB DATE 9/8/98
CHKD BY _____ DATE _____

POND 1A

WATER QUALITY CALS

LT SIDE

DRAINAGE AREAS

1A-33 - A-71 will have to leave out 1A-72, 1A-73

From Spreadsheet sys1NSZNG.xls

Area = 6.82 ac

WQV = 12,378.30 cf

A_s = 1251.83 sf

A_f = 687.68 sf

V_f = 2,475.66 cf

RT SIDE

DRAINAGE AREAS

MI inlets 1D-67 to 1D-72 - could take across to Lt side & treat Lt & Rt

If do that Area = 8.57 ac - Entire Area

WQV = 15,554.55 cf to be treated

A_s = 1,555.45 sf

A_f = 864.14 sf

V_f = 3,110.91 cf

Turner Collie & Braden Inc.
Engineers • Planners • Project Managers

COMPUTATION SHEET

SUBJECT US 183 SEC 1
/ A POND 1A

JOB NO. 7207401022 SHEET NO. ____ OF ____

BY RAB DATE 9-9-98

CHKD BY ____ DATE ____

WATER QUALITY CALC.

REQUIRED

SEE PREVIOUS PAGES

ACTUAL

$V_{SED} = (30-15)(214)(5) + (93)(30)(5) = 15,600$ CF

$15,600 > 15,554.55$ CF

$A_{SED} = (15)(22) + 93(30) = 3120$ SF

$3120 > 1555.45$

$A_{FILT} = 29(30) = 870$ SF

$870 > 864.14$

$V_{FILT} = 29(30)(5) = 4350$ CF

$4350 > 3110.91$

STA 839+60.51 - 839+58 912.47 59.08 62.11

Turner Collie & Braden Inc.
Engineers • Planners • Project Managers

COMPUTATION SHEET

SUBJECT US 183 Sec 1
System 1S Pond B

JOB NO. 7207441022 SHEET NO. ____ OF ____

BY RAB DATE 8-6-98

CHKD BY ____ DATE ____

1SE50.DAT
1SEPD.DAT

POND 1B

POND DIMENSIONS

POND WIDTH = 30 FT

TOTAL LENGTH = 126.83 FT

SPLITTER BOX = 10 FT X 14.5 FT

DROP FROM SPLITTER BOX TO SED POND = 2.5

SED POND LENGTH = 91.5

FILTER POND LENGTH = 24 FT

POND DEPTH = 5 FT

LOWEST ELEV. ON PROP DITCH = 925.6

925.6 - 1.1 925.6

924.6 - 2 = 922.60

922.60 - 1.5 = 921.1

921.10 - 5 = 916.10

USE 916.

916 + 5 = 921.00 EL OF WATER IN SED POND / TOP OF WEIR

921.0 + 1.5 = 922.50 SOFFIT OF POND

922.50 + 2 = 924.50 TOP OF POND

HT OF WEIR = 921 - 918.5 = 2.5

922.5 - 4.5" - 42" = 918.63

918.63 - 916 = 2.63 ~ 2.5

916 + 2.5 = 918.5 FL OF 42" INTO SB

918.5 + 42" = 922.00 SOFFIT OF 42"

922.00 + 4.5" = 922.38

922.38 < 922.50

1SE50.DAT

Turner Collie & Braden Inc.
Engineers • Planners • Project Managers

COMPUTATION SHEET

SUBJECT US 183 Sec 1
System 1 Pond

JOB NO. 720740102.2 SHEET NO. ____ OF ____

BY RAB DATE 6-29-98

CHKD BY ____ DATE ____

REQUIRED

0.47 0.41 0.34 0.87 0.56 0.38 0.32 0.77 0.39 0.25 0.32 0.39 0.22
IB-1, IB-2, IB-3, IB-4, IB-5, IB-6, IB-7, IB-8, IB10, IG-1, IB-11, IB-12, IB-13,
0.21 0.16 0.05 0.38 0.20 0.05 0.36
IB-14, IB-15, IB-16, IB-17, IB-18, IB-19, IB-20,

pipe into SB 42"

A_T = 7.09 AC

$WQV = (7.09)(43,560)(0.5)/12 = 12,868.35$ CF

$A_S = \frac{A_D H}{10} = 7.09(43,560)(\frac{0.5"}{0.042})/(10) = 1286.84$ SF

$A_F = \frac{A_D H}{18} = 7.09(43,560)(0.042)/18 = 714.91$ SF

$V_{FILT} = 0.2(WQV) = 2,573.67$ CF

0.23 0.29 1.57 0.59 0.24 0.53 0.42 0.47 0.39 0.39 0.26 0.53
IC-1, IC-50, IC-3, IC-4 IC-6, IC-7, IC-9, IC-11, IC-12, IC-13, IC-14, IC-15
0.16 0.45 0.55 0.32 0.16
IC-16, IC-18, IC-19, IC-20, IC-21

$A_T = 7.35$

$WQV = (7.35)(43,560)(0.5)/12 = 13,340.25$ CF

$A_S = \frac{A_D H}{10} = 7.35(43,560)(0.042)/10 = 1334.03$ SF

$A_F = \frac{A_D H}{18} = 7.35(43,560)(0.042)/18 = 714.13$ SF

$V_{FILT} = 0.2(WQV) = 2668.05$ CF

Turner Collie & Braden Inc.
Engineers • Planners • Project Managers

COMPUTATION SHEET

SUBJECT US 183 Sec 1
System 1 S Ponds
JOB NO. 720740102 22 SHEET NO. ____ OF ____
BY RAB DATE 7/8/98
CHKD BY ____ DATE ____

POND 1 B

A = 7.09 AC

REQUIRED

$WQV = (7.09)(43,560)(0.5"/12) = 12,868.85\ CF$

$A_S = \frac{A_D H}{10} = (7.09)(43,560)(0.5/12)/10 = 1286.84\ SF$

$A_f = \frac{A_D H}{18} = (7.09)(43,560)(0.5/12)/18 = 714.91\ SF$

$V_{FILT} = 0.2\ WQV = 2573.67\ CF$

Actual

$V_{SED\ POND} = (30-11)(14.5+1)(5) + (30)(76)(5) = 12,872.50\ CF$

$12,872.50\ CF > 12,868.35\ CF$

$A_S = (15.5)(19) + (76)(30) = 2574.50\ SF$

$2574.50\ SF > 1286.84\ SF$

$A_f = (24)(30) = 720\ SF$

$720\ SF > 714.91\ SF$

$V_{FILT} = (24)(30)(5) = 3600\ CF$

$3600\ CF > 2573.67\ CF$

Turner Collie & Braden Inc.
Engineers • Planners • Project Managers

COMPUTATION SHEET

SUBJECT US 183 Sec 1
System 1S Pond C
JOB NO. 7207401022 SHEET NO. ____ OF ____
BY RAB DATE 8-10-98
CHKD BY ____ DATE ____

POND 1C

1SWDO.DAT
1-1SW-50.DAT

POND DIMENSIONS

POND WIDTH = 30 FT

TOTAL LENGTH = 116.83

SPLITTER BOX = 10 FT x 14.5 FT

DROP FROM SPLITTER BOX TO SED POND = 1.75

SED POND LENGTH = 80.5 FT

FILTER POND LENGTH = 25 FT

POND DEPTH = 6 FT

LOWEST ELEV. ON PROP DITCH = 927.3

927.3 - 1 = 926.3

926.3 - 2 (LID) = 924.3

924.3 - 1.5 = 922.8

922.8 - 6 = 916.8

USE 916.75 (FL OF POND @ BEG)

916.75 + .6 = 922.75 EL OF WATER IN SED POND / TOP OF WEIR

922.75 + 1.5 = 924.25 SOFFIT OF POND

924.25 + 2 = 926.25 TOP OF POND

924.25 - 4" - 3' = 920.12

920.92 - 916.75 = 4.17

916.75 + 4 = 920.75 too High

FL 42" INTO 6B

918.5 - 916.75 = 1.75

918.5 + 42" + 4.5" = 922.38

922.38 < 924.25

Turner Collie & Braden Inc.
Engineers • Planners • Project Managers

COMPUTATION SHEET

SUBJECT US 183 Sec 1
SYSTEM 1 Pond
JOB NO. 72074O1022 SHEET NO. ____ OF ____
BY RAB DATE 6-29-98
CHKD BY ____ DATE ____

REQUIRED

0.47 0.41 0.34 0.87 0.66 0.38 0.32 0.77 0.39 0.25 0.32 0.39 0.22
IB-1, IB-2, IB-3, IB-4, IB-5, IB-6, IB-7, IB-8, IB-10, IB-11, IB-12, IB-13,
0.21 0.16 0.05 0.38 0.20 0.05 0.36
IB-14, IB-15, IB-16, IB-17, IB-18, IB-19, IB-20,

pipe into SB 42"

A_T = 7.09 AC

$WQV = (7.09)(43,560)(0.5)/12 = 12,868.35$ CF

$A_S = \frac{A_D H}{10} = 7.09(43,560)(\frac{0.5}{0.042})/(10) = 1286.84$ SF

$A_F = \frac{A_D H}{18} = 7.09(43,560)(0.042)/18 = 714.91$ SF

$V_{FILT} = 0.2(WQV) = 2,573.67$ CF

0.23 0.29 1.57 0.59 0.24 0.53 0.42 0.47 0.39 0.39 0.26 0.23
IC-1, IC-50, IC-3, IC-4 IC-6, IC-7, IC-9, IC-11, IC-12, IC-13, IC-14, IC-15
0.16 0.45 0.55 0.32 0.16
IC-16, IC-18, IC-19, IC-20, IC-21

A_T = 7.35

$WQV = (7.35)(43,560)(0.5)/12 = 13,340.25$ CF

$A_S = \frac{A_D H}{10} = 7.35(43,560)(0.042)/10 = 1334.03$ SF

$A_F = \frac{A_D H}{18} = 7.35(43,560)(0.042)/18 = 714.13$ SF

$V_{FILT} = 0.2(WQV) = 2668.05$ CF

Turner Collie & Braden Inc.
Engineers • Planners • Project Managers

COMPUTATION SHEET

SUBJECT US 183 Sec 1
Sys 1S Pond C.
JOB NO. 7207401022 SHEET NO. ____ OF ____
BY RAB DATE 8-10-98
CHKD BY ____ DATE ____

WATER QUALITY CALC.

ACTUAL

80.5 - 15.5

$V_{SED} = (30-11)(14.5+1)(6) + (30)(65)(6) = 13,467.00$ CF

$13,467 > 13,340.25$

$A_S = (15.5)(19) + (65)(30) = 2244.50$ SF

$2244.50 > 1334.03$

$A_F = (25)(30) = 750$ SF

$750 > 714.13$

$V_{FILT} = (25)(30)(6) = 4500$ CF

$4500 > 2668.05$

Turner Collie & Braden Inc.
Engineers • Planners • Project Managers

COMPUTATION SHEET

SUBJECT US 183 Sec 1
System 2 Ponds
JOB NO. 7207401022 SHEET NO. ____ OF ____
BY LAB DATE 6/24/98
CHKD BY ____ DATE ____

POND 2A

POND DIMENSIONS

POND WIDTH = 30 FT POND DEPTH = 5 FT

TOTAL LENGTH = 146.8333

SPLITTER BOX = 10 FT x 14.5 FT

DROP FROM SPLITTER BOX TO SED POND = 1.5 FT

SED. POND LENGTH = 106.8 FT

FILTER POND LENGTH = 28 FT

WATER QUALITY

$V_{SED\ POND} = (30-11)(14.5+1)(5) + (30)(91)(5) = 15,122.50\ CF$
(1472.5; 13650)

$15,122.50 > 15,010.05$

$A_s = (15.5)(19) + (91)(30) = 3024.50\ SF$

$3024.50 > 1501.01$

$A_f = (28)(30) = 840\ SF$

$840 > 833.89$

$V_{FILT} = (28)(30)(5) = 4200\ CF$

$4200 > 3002.01$

SPLITTER BOX

P = Ht of weir = 3.5
H = Ht over weir = 1.5
$Q = C L H^{3/2}$

$Q = 92.5\ cfs$

Turner Collie & Braden Inc.
Engineers • Planners • Project Managers

COMPUTATION SHEET

SUBJECT US 183 System 2
Pond for A

JOB NO. 7207401022 SHEET NO. ____ OF ____

BY RAB DATE 5-8-98

CHKD BY ____ DATE ____

System 2A

AREA = 0.15 + 1.25 + 0.21 + 0.57 + 0.34 + 0.17 + 0.18 + 0.40 + 0.61 + 1.86 + 0.32 + 0.45 + 0.44 + 0.45 + 0.45 + 0.42

AREA = 8.27 AC

$WQV = (8.27)(43,560)(0.5")/12 = 15,010.05$ CF

$A_S = \frac{A_D H}{10} = (8.27(43,560)0.5)/12)/10 = 1501.01$ SF

$A_f = \frac{A_D H}{18} = (8.27)(43,560)(@5/12)/18 = 833.89$ SF

$V_{FILT} = 0.2\ WQV = (0.2)(15,010.05) = 3002.01$ CF

$V_{HAZ\ MAT}$ 336.80 CF

50 YR FLOW INTO SB = 55.89 CFS

H = HT OVER WEIR = 1.5

P = HT OF WEIR = 3.5

$C = (0.6035 + 0.0813(H/P) + 0.000295/P)(1 + 0.00361/H)^{3/2}$

C = 0.64

$Q = \frac{2}{3} C L \sqrt{2g}\ H^{3/2} = 90.43$ CFS

55.89 < 90.43

ner Collie & Braden Inc.
neers • Planners • Project Managers

COMPUTATION SHEET

SUBJECT US 183 Sec 1
System 2 Ponds
JOB NO. 7207401022 SHEET NO. ____ OF ____
BY RAB DATE 7-31-98
CHKD BY ____ DATE ____

POND 2A CONT

915.06 − 2.08 = 913.58 FL 4" PVC @ BEG

913.58 − 23(0.01) = 913.35 FL 4" PVC @ END

913.35 + 4" − 6" = 913.18 FL 6" PVC

913.18 − 12.5(0.01) = 913.06 FL 6" PVC @ MIDPT

913.06 + 6" − 8" = 912.89 FL 8" PVC @ MIDPT

912.89 − 3.92(0.01) = 912.85 FL 8" PVC @ OUTSIDE OF POND

WATER QUALITY CALS

ACTUAL

V_{SED} = (30−11)(14.5+1)(5) + (30)(91)(5) = 15,122.50 CF

15,122.50 > 15,010.05

A_{SED} = 19(15.5) + (91)(30) = 3024.50 SF

3024.50 > 1501.01

A_{FILT} = (30)(28) = 840 SF

840 > 833.89

V_{FILT} = 30(28)(5) = 4200 CF

4200 > 3002.01

Turner Collie & Braden Inc.
Engineers • Planners • Project Managers

COMPUTATION SHEET

SUBJECT US 183 Sec 1
System 2 Ponds
JOB NO. 7207401022 SHEET NO. ____ OF ____
BY RAB DATE 7/6/98
CHKD BY ____ DATE ____

thickness 2.0'

POND 2B

POND DIMENSIONS

POND WIDTH = 30 FT

TOTAL LENGTH = ~~64.83~~ FT

SPLITTER BOX = 10FT x 14.5FT

DROP FROM SPLITTER BOX TO SED POND = 3.5 FT

SED POND LENGTH = 58.5 FT

FILTER POND LENGTH = 15FT

POND DEPTH = 5FT

PROFILE @ LOWEST PT OF DITCH = 928.3

FL 30" INTO POND = 921.99

921 ~~FF~~ 921.3

921.99 - 3.5 = 918.49 = FL. @ BEG SED POND (3)

918.49 + 5 = 923.49 TOP OF WEIR / WATER ELEV.

923.49 + 1.5 = ~~924.99~~ SOFFIT OF POND

924.99 + 2 = ~~926.99~~ TOP OF POND

928.3 - 926.99 = 1.31' COVER OVER POND @ LOWEST PT OF DITCH

HT OF WEIR = 1.50

921.99 + 2.5 + 3.5" = 924.78

Turner Collie & Braden Inc.
Engineers • Planners • Project Managers

COMPUTATION SHEET

SUBJECT US 183 System 2
POND FOR B
JOB NO. 220740102 SHEET NO. ____ OF ____
BY RAB DATE 5-8-98
CHKD BY ____ DATE ____

SYSTEM 2B

AREA = 0.24 + 0.40 + 0.18 + 0.97 + 0.27 + 0.20 + 0.24 + 0.56 + 1.23 = 4.29 AC

$WQV = (4.29)(43,560)(0.5/12) = 7786.35$ CF

$A_S = \frac{A_O H}{10} = (4.29)(43,560)(0.5/12)/10 = 778.64$ SF

$A_F = \frac{A_O H}{18} = (4.29)(43,560)(0.5/12)/18 = 432.58$ SF

$V_{FILT} = 0.2\ WQV = (0.2)(7786.35) = 1557.27$ CF

~~$V_{HAZMAT} = 1336.80$ CF~~

$V_{SED} = (30-11)(14.5+1)(5) + (30)(43)(5) = 7922.50$ CF
7922.50 > 7786.35

$A_{SED} = 19(15.5) + (30)(43) = 1584.50$ SF
1584.50 > 778.64

$A_F = 15(30) = 450$ SF
450 > 432.58

$V_{FILT} = 15(30)(5) = 2250$ CF
2250 > 1557.27

Turner Collie
Engineers + Planners

COMPUTATION SHEET

SUBJECT US 183 Sec 1
System 2 Ponds

JOB NO. 72674.0122 SHEET NO. ____ OF ____

BY RAB DATE 7/17/98

CHKD BY ____ DATE ____

POND

POND DIMENSIONS

POND WIDTH = 30 FT

TOTAL LENGTH = 193.83 FT

SPLITTER BOX = 10 FT x 14.5 FT

DROP FROM SPLITTER BOX TO SED POND = 4.50 FT

SED POND LENGTH = 81.5 FT

FILTER POND LENGTH = 31 FT

POND DEPTH = 6.5 FT

HT OVER WEIR = 1.5 FT

TOP OF PROP DITCH = 930.7

930.7 - 1.5 - 2 (thickness of top) = 927.20

927.20 - 1.5 = 925.70

925.70 - 6.5 = 919.20

927.20 - 4" - 36" = 923.87

~~923.87 - 4" = 923.53~~

~~923.87 - 919.20 = 4.67~~

~~4.67 - 4.50 = 0.17~~

919.20 + 0.17 = 919.37 ≈ 919.4

919.4 + 6.5 + 1.5 + 2 = 929.40 = Top of Pond (SMALLEST OVER)

930.7 - 929.4 = 1.30' OF COVER

929.4 - 2 = 927.4 SOFFIT OF POND

919.4 + 4.50 = 923.90 FL OF 88436"

~~923.55 + 4" = 923.88 FL OF 36" RCP~~

923.90 + 36" = 926.80 SOFFIT OF 36"RCP

923.90 + 4" = 927.23 TOP OF 36"RCP

927.23 < 927.4

919.4 + 6.5 = 925.90 Top of Water Elev in Pond = Weir Elev

925.90 - 923.96 = 2.00' ht of weir

Turner Collie & Braden Inc.
Engineers • Planners • Project Managers

COMPUTATION SHEET

SUBJECT US 183 System 2
Pond for C
JOB NO. 7207401022 SHEET NO. ____ OF ____
BY RAB DATE 5-5-98
CHKD BY ____ DATE ____

System 2C.

Area = 0.55 + 7.53 + 0.13 + 0.93 = 9.14 Ac

$WQV = (9.14)(43,560)(0.5)/12 = 16,589.10$ CF

$A_S = \frac{A_D H}{10} = (9.14)(43,560)(0.042)/10 = 1658.91$ SF (0.5")

$A_F = \frac{A_D H}{10} = (9.14)(43,560)(0.042)/18 = 921.62$ SF

$V_{FILT} = 0.2(WQV) = 0.2(16,589.10) = 3317.82$ CF

Actual

$V_{SED} = (30-11)(14.5+1)(6.5) + (30)(76)(6.5) = 16734.25$ CF

16734.25 > 16,589.10

$A_{SED} = \frac{1}{2}(15.5)(30) + 30(76) = 2574.5$ SF

2574.5 > 1658.91

$A_{FILT} = (31)(30) = 930$ SF

930 > 921.62

$V_{FILT} = (31)(30)(6.5) = 6045$ CF

6045 > 3317.82

Turner Collie & Braden Inc.
Engineers • Planners • Project Managers

COMPUTATION SHEET

SUBJECT US 183 Sec 1
System 2 Ponds
JOB NO. 7207401022 SHEET NO. ____ OF ____
BY RAB DATE 7/6/98
CHKD BY ____ DATE ____

35

POND 2D 1

POND DIMENSIONS

HT OVER WEIR = 1.5 FT

POND WIDTH = 30 FT.

TOTAL LENGTH = 179.33 FT

SPLITTER BOX = 12 FT. X 21 FT

DROP FROM SPLITTER BOX TO SED POND = 2.5 FT

SED POND LENGTH = 131 FT

FILTER POND LENGTH = 37 FT

POND DEPTH = 5.5 FT

TOP OF PROP DITCH = ~~929.0~~ 928.5

92~~9.0~~8.5 - 1.~~25~~ COVER - 2.5 = 925.~~25~~00

925.~~25~~00 - 1.5 = 923.~~75~~50

923.~~75~~50 - 5.5 = 918.~~25~~13 00

925.~~25~~00 - 4.5" - 42" = 921.~~38~~13

921.~~38~~13 - 918.~~25~~00 = 3.13

918.~~25~~00 + 0.13 = 918.~~38~~13 ~ ~~918.40~~

921.~~43~~63 - 0.5 = 920.~~93~~63 FL OF SB + 48" RCP

920.~~93~~63 + 4' = 924.~~93~~63 SOFFIT OF 48" RCP

924.~~93~~63 + 5" = ~~925.32~~ 925.05 TOP OF 48" RCP

~~925.32~~ 925.05 < 925.~~40~~13

918.~~40~~13 + 5.5 + 1.5 + 2.5 = 927.~~90~~63 → TOP OF POND

92~~9.0~~8.5 - 927.~~90~~63 = ~~1.10~~ 0.87 @ LOWEST FT OF DITCH OF COVER (SMALLEST)

927.~~90~~63 - 2.5 = 925.~~40~~13 SOFFIT OF POND

918.~~0~~13 + 2.5 = 920.~~90~~63 FL OF SB

921.~~40~~13 + 42" = 924.~~90~~63 SOFFIT OF 42" RCP

924.~~90~~63 + 4.5" = ~~925.23~~ 925.01 TOP OF 42" RCP

~~925.23~~ 925.01 < 925.~~40~~13

918.~~0~~13 + 5.5 = 923.~~90~~63 TOP OF WATER ELEV IN POND + WEIR EL

923.~~90~~63 - 920.~~90~~63 = 3' HT OF WEIR

923.63 - 920.53 = 3.1'

Turner Collie & Braden Inc.
Engineers • Planners • Project Managers

COMPUTATION SHEET

SUBJECT US 183 System 2
Pond for 2D1

JOB NO. 7207401022 SHEET NO. 1 OF ____

BY RAB DATE 5-3-98

CHKD BY ____ DATE ____

System
FROM 2D-1 TO 2D-16

Area = 1.44 + 0.214 + 1.55 + 0.37 + 0.54 + 1.91 + 0.32 + 0.45 + 0.36 + 1.91 + 1.92 = 10.984 ac

$WQV = (10.984)(43,560)(0.5")/12 = 19,935.96$ CF

$A_S = \frac{A_D H}{10} = (10.984)(43,560)(0.042)/10 = 1993.60$ SF

$A_F = \frac{A_D H}{18} = (10.984)(43,560)(0.042)/18 = 1107.55$ SF

$V_{FILT} = 0.2\ WQV = (0.2)(19,935.96) = 3987.19$ CF

ACTUAL

$V_{SED} = (30-13)(21+1)(5.5) + (109)(30)(5.5) = 20,042$ CF

17 22

$20,042 > 19,935.96$

$A_{SED} = 17(22) + 109(30) = 3644$ SF

$3644 > 1993.60$

$A_{FILT} = 37(30) = 1110$ SF

$1110 > 1107.55$

$V_{FIL} = 37(30)(5.5) = 6105.00$ CF

SUBJECT [illegible] NO. 849 P.21/22

SYSTEM 2 POND

JOB NO. 7207401022 SHEET NO. ____ OF ____

BY RAB DATE 7/6/98

CHKD BY ____ DATE ____

* Splitter Box width parallel to Pond length (Different from other Ponds

Rev 8/11/98

POND 2D 2

POND DIMENSIONS

HT OVER WEIR = 2 FT

POND WIDTH = 30 FT

TOTAL LENGTH = 209.33 FT

SPLITTER BOX = 12 FT X 21 FT

DROP FROM SPLITTER BOX TO SED POND = ~~1.5~~ 1 FT

SED POND LENGTH = 151 FT

FILTER POND LENGTH = 47 FT

POND DEPTH = 6 FT

TOP OF PROP DITCH = 927.5
@ LOWEST PT

FL OF 54" INTO SB = 916.85

921.85 - 916.85 = ~~4.5~~ 5 HT OF WEIR

916.85 - 1.~~5~~ = 915.~~85~~ 8 FL @ BEG SED POND

915.~~85~~ 8 + 6 = 921.~~85~~ 8 TOP OF WEIR

921.~~85~~ 8 + 2 = 923.85 SOFFIT OF POND/SB (Ht over Weir)

Ht of Weir = ~~4.5~~ 5

923.~~85~~ 8 + 2.5 = 92~~3.85~~ 6.3 TOP OF POND (TOP THICKNESS)

927.5 - 92~~3.85~~ 6.3 = 1.~~65~~ COVER @ LOWEST PT OF DITCH

916.85 + 54" = 921.35 SOFFIT OF 54" INTO SB

921.35 + 5.5" = 921.81 TOP OF 54" INTO SB

921.81 < 923.85

916.71 + 54" = 921.21 SOFFIT OF 54" OUT OF SB

921.21 + 5.5" = 921.67 TOP OF 54" OUT OF SB

921.67 < 923.85

Turner Collie & Braden Inc.
Engineers • Planners • Project Managers

COMPUTATION SHEET

SUBJECT US 183 SYSTEM 2
POND FOR D

JOB NO. 720740102 SHEET NO. ____ OF ____

BY RAB DATE 5-8-98

CHKD BY ____ DATE ____

SYSTEM 2D (2D-19 + 2D-28)

AREA= 3.63 + 0.15 + 1.31 + 4.00 + 3.22 + 1.63 = 13.94 Ac

$WQV = (13.94)(43,560)(0.5/12) = 25,301.10$ CF

$A_S = \frac{A_D H}{10} = (13.94)(43,560)(0.5/12)/10 = 2530.11$ SF

$A_F = \frac{A_D H}{18} = (13.94)(43,560)(0.5/12)/18 = 1405.62$ SF

$V_{FILT.} = 0.2\ WQV = (0.2)(25,301.10) = 5060.22$ CF

Actual

$V_{SED} = (30-22)(12+1)(1.6) + 138(30)(6) = 25,464$ CF

$25,464 > 25,301.10$

$A_S = 8(13) + (138)(30) = 4244$ SF

$4244 > 2530.11$

$A_F = 30(47)$ 1410 SF

$1410 > 1405.62$

$V_F = 30(47)(6) = 8460$ CF

$8640 > 5060.22$

TurnerCollie & Braden Inc.

Engineers • Planners • Project Managers

400 West 15th Street
Suite 500
Austin, Texas 78701
(512) 472-4519
Fax (512) 472-7519
E-Mail: tcbaus@io.com

TO: Sylvia Pope	FAX# 499-2846
FROM: Connie Bills	PHONE: 512-472-4519 FAX: 512-472-7519
DATE: 1/7/99	COVER + 8 PAGE(S)
REGARDING: 115183 Update Sys 5 - Woods Pond	

MESSAGE

Include are the Woods Pond (Wet Pond) Calculations.

Connie Bills

Turner Collie & Braden Inc.
Engineers • Planners • Project Managers

COMPUTATION SHEET

SUBJECT US 183 Sect 1 Update
WOODS TRACT POND
JOB NO. _____ SHEET NO. 1 OF _____
BY CDB DATE 6/11/98
CHKD BY _____ DATE _____

Check original calcs.

$V = 0.162 * R_f * DA$

IC Revised - DA's revised ≅ 55% I.C.
DA = 102.75 ac

$V = (0.162)(R_f)(102.75)$

R_f - COA pg 1-202 Table 1-9 Recharge zone
$R_f = 0.351$

V = 5.842 ac-ft — actual = 6.98 + 5.842 < ~~6.98~~ 7.29 plenty
.31
7.29

not including veg. bench

Sediment Forebay - 15-25% of perm vol
0.20 * 5.842 = 1.169 ac-ft < Actual 1.65 ac-ft

Veg. bench - 20% of Total pond area
Range from 10' to 20' wide
& slope 5 to 15%

22.67% of perm Vol.

Main Pool
vol = 5.842 - 1.169 = 4.674 ac-ft - including Veg. bench

Actual 25.68% of Total Area

VOLUME CALCULATIONS FOR SYSTEM 5 PONDS

WATER QUALITY CALCULATIONS
WOODS POND

11-Jun-98

MAIN POND

ELEV ft	AREA sf	VOLUME cf
914.82	55,399.01	
		44,084.18
914	52,123.37	
		50,288.96
913	48,454.54	
		46,726.62
912	44,998.70	
		43,362.60
911	41,726.50	
		40,170.95
910	38,615.39	
		37,131.56
909	35,647.73	
		30,086.99
908	24,526.25	
		12,263.12
907	0.00	
		304,114.97 CF

MAIN POND TOTAL excluding vegetative bench: 304,114.97 CF — 6.98 ac-ft

TOTAL WET POND AREA from ACAD: 106,338.84 SF

SEDIMENT FOREBAY

ELEV ft	AREA sf	VOLUME cf
914.82	23,631.84	
		18,569.38
914	21,659.27	
		20,479.94
913	19,300.60	
		18,236.84
912	17,173.08	
		3,046.15
911.82	16,673.07	
		11,716.64
911	11,904.10	

72,048.93 CF — 1.65 ac-ft

22.67% OF TOTAL VOLUME

VEGETATIVE BENCH

TOTAL AREA: 27,307.99 SF

25.68% OF TOTAL AREA

TOTAL VOLUME: 13,654.00 CF — 0.31 ac-ft

Turner Collie & Braden Inc.
Engineers • Planners • Project Managers

COMPUTATION SHEET

SUBJECT US 183 Sect 1 Update
WOODS TRACT POND
JOB NO. _____ SHEET NO. 1 OF 1
BY CDB DATE 5/28/98
CHKD BY _____ DATE _____

ORIGINAL CALCS

Wet Pond

$V = 0.162 * R_f * DA$

Table 4.9 pg 1-202 COA ENV'L Manual
- I.W/ 63.05% Impervious Cover
R_f = 0.401 to .453 Recharge

$\frac{.458 - .405}{.05} = \frac{.453 - x}{0.0195}$ $x = 0.434$

according to COA Environmental Manual
p. 1-169 – 1' C.I. can leave out WOODS property in WQ calcs because. WOODS will treat it

PERM POOL VOL.

$V = (0.162)(.434)(102.17) = 7.185$ ac-ft 312,908.78 CF

Permanent Pool 2 compartments
Sediment Forebay
Main Pool

SEDIMENT FOREBAY – 15% - 25% of permanent vol.
- 14'-6" deep
- vegetative benches (entire Perm Pool will have this)
- min 2% slope towards a low point
- reinforced conc. pad – 12' by 16'
- 12' conc. maintenance Ramp 4:1 leave at least 12" above perm pool elev to maintenance pad

use 0.20% as starting point
(0.20)(7.183) = 1.4366 ≈ 1.437 ac-ft

Turner Collie & Braden Inc.
Engineers • Planners • Project Managers

COMPUTATION SHEET

SUBJECT US 183 Sect 1 Update - Woods Tract Pond
JOB NO. _____ SHEET NO. 2 OF _____
BY CDB DATE 5/28/98
CHKD BY _____ DATE _____

consider vegetative bench 20% of the total pond area
min 10' wide
S = 5 to 15%
Max. inundation of 18"

if use 1.5'



want 20' wide

$\frac{1.5'}{20'}$ = 7.5% slope

use min 5% slope

(20)(.05) = 1'

SEE A TYPICAL X-SECTION OF POND page 3

FOR CONTOURING:
end of pond - detention elev

264

916 - (.30% × 60) = 915.82

915.82 - (5% × 20') = 914.82

even contour
915 - 914.82 = .18
× 20
3.6'

5% = 20:1

Main Pool vol = 7.183 − 1.437 = 5.746 ac-ft - includes veg. bench

Turner Collie & Braden Inc.
Engineers • Planners • Project Managers

COMPUTATION SHEET

SUBJECT _____

JOB NO. _____ SHEET NO. 3 OF _____

BY _____ DATE 5/28/99

CHKD BY _____ DATE _____

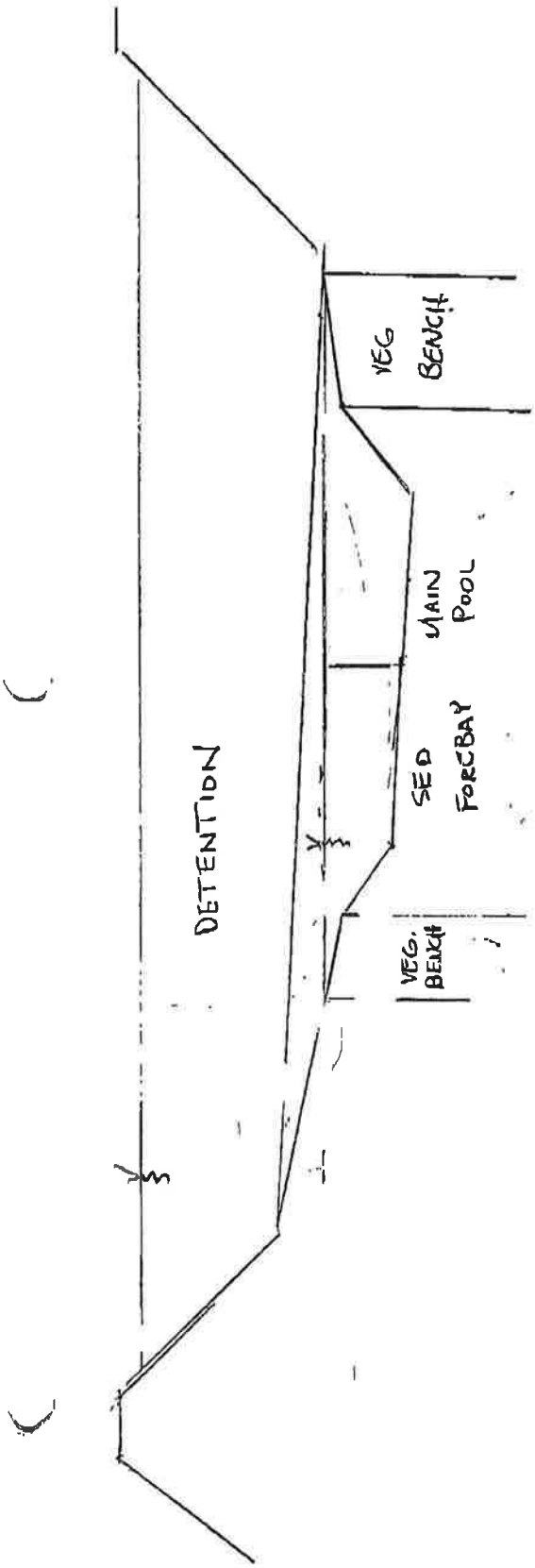

Turner Collie & Braden Inc.
Engineers • Planners • Project Managers

COMPUTATION SHEET

SUBJECT _____

JOB NO. _____ SHEET NO. 4 OF _____

BY _____ DATE 5/20/98

CHKD BY _____ DATE _____

Rough Est

Main Pool L≈ 277

So will drop 277 * .01 = 2.77' over length

don't want deeper than 8'

914.82 if start w/ 5' depth

5 to 7.65'

SEDIMENT FOREBAY

L= ?

1.437 ac-ft

5' Avg depth

0.2874 ac = 12,519 SF

if L = 120'

W= 104.325'

Outfall @ elev — 917.77

Slope @ 0.30% for 20'

917.77 - (20 * .30%) = 917.71

If use 20:1 917.71 - 914.82 = 2.89 = 57.8 ft

too long

Want flow to spread out.

use Slope @ 0.30% for 30' 917.77 - (30 * .30%) = 917.68

Slope 3:1 to 915.82 — 917.68 - 915.82 = 1.86

Turner Collie & Braden Inc.
Engineers • Planners • Project Managers

COMPUTATION SHEET

SUBJECT _____

JOB NO. _____ SHEET NO. 5 OF _____

BY _____ DATE 3/23/98

CHKD BY _____ DATE _____

SED FOREBAY CONT

3:1 slope to 2'-3'

if L=120

120 x .02 = 2.4' drop

begin w/ 3.32' 914.82 to 911.5. 3.32 x 3 = 9.96

want to put a slight curve in pond to make it more natural looking

& culvert 338.8138

Pond " 19.8569

2% slope all directions

down E of pond 911.5 - (120 x .02) = 909.1

need to have center steeper than 2%

need E = 908.8

$$\frac{911.5 - 908.8}{120} = 2.25\%$$

$$\frac{0.5}{2.25\%} = 22.22$$

$$\frac{1}{.0225} = 44.44$$

Turner Collie & Braden Inc.
Engineers • Planners • Project Managers

COMPUTATION SHEET

SUBJECT _____

JOB NO. _____ SHEET NO. 6 OF _____

BY _____ DATE 5/28/98

CHKD BY _____ DATE _____

Reverse Sod. Forbay

45'

use S = 0.30% for 15' - (Energy dissipators ect.)

918 - 917.77 = 0.23

3(.23) = 0.69

917.77 - (15 * .30%) = 917.73'

3:1 slope to veg. bench

917.73 - 915.82 = 1.91

1.91 * 3 = 5.73

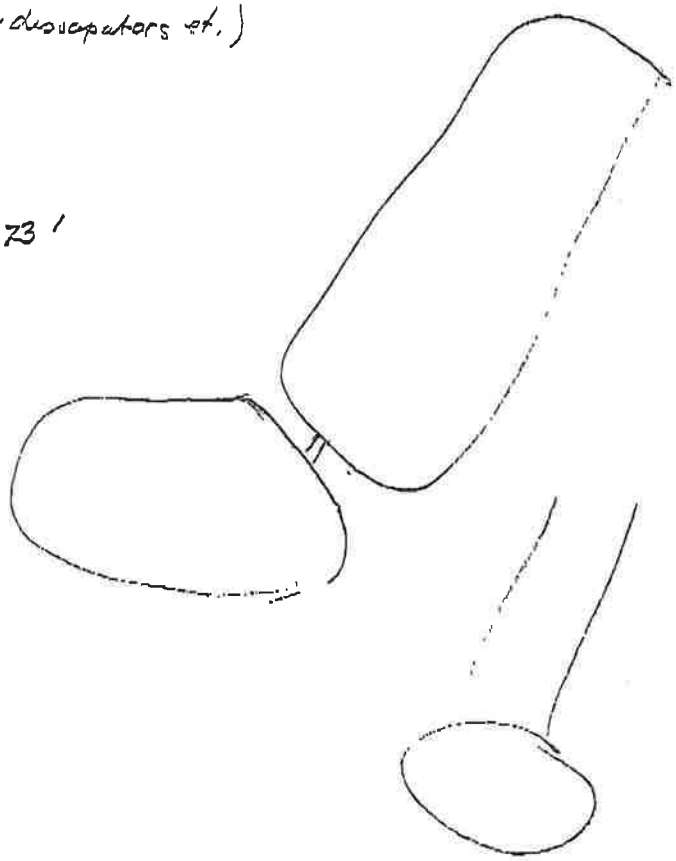

6/2/98

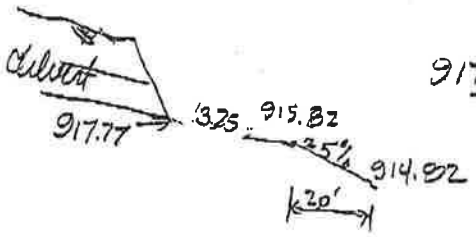

$\frac{917.77 - 915.82}{60} = 3.25\%$ 30.77 : 1

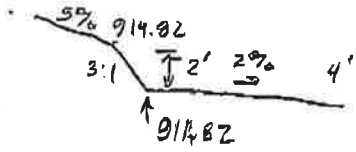

$\frac{911.82 - 911}{x} = .02$ $x = 41$

TurnerCollie & Braden Inc.
Engineers • Planners • Project Managers

400 West 15th Street
Suite 500
Austin, Texas 78701
(512) 472-4519
Fax (512) 472-7519
E-Mail: tcbaus@io.com

TO: Sylvia Pope	FAX# 499-2846
FROM: Connie Bills	PHONE: 512-472-4519 FAX: 512-472-7519
DATE: 1/7/99	COVER + 2 PAGE(S)
REGARDING: US 183 Sect 1 Updates	

MESSAGE

System 3 (Pond Springs Pond) calcs are included.

Connie Bills

Turner Collie & Braden Inc.
Engineers • Planners • Project Managers

COMPUTATION SHEET

SUBJECT VS183 WQPESYS3
POND AREA/VOLUME REQUIREMENTS
JOB NO. 72-0740102 SHEET NO. 5 OF ____
BY KKy DATE 9-24-97
CHKD BY ____ DATE ____

① REQUIRED WQV (See Spread sheet T:\0740102\POND\SV1-3da.XLS)

TOTAL ONSITE DRAINAGE AREA = 36.33 ~~Ac~~ ac

$$36.33 \text{ ac} \times \frac{43{,}560.2 \text{ ft}^2}{1 \text{ ac}} = 1{,}582{,}541.1 \text{ ft}^2$$

$$1{,}582{,}541.1 \text{ ft}^2 \times (1/2") \left(\frac{1 \text{ ft}}{12 \text{ in}}\right) = \boxed{65{,}939.2 \text{ ft}^3 = WQV}$$

② SIZE SEDIMENTATION BASIN (MINIMUM BOTTOM SURFACE AREA)

$$A_s = \frac{WQV}{10} = \frac{65{,}939.2}{10} = \boxed{6593.9 \text{ ft}^2 = A_s}$$

note: - This A_s also may include hazard material basin
- Depth must be min 3 ft & max 10 ft.
- Try to keep size 2:1 W or greater

③ SIZE FILTRATION BASIN (MINIMUM BOTTOM SURFACE AREA)

$$A_f = \frac{WQV}{18} = \frac{65{,}939.2}{18} = \boxed{3663.3 \text{ ft}^2 = A_f}$$

④ Volume of Sediment Basin must be greater to or equal to TOTAL WQV

$$V_s \geq WQV = (65{,}939.2 \text{ ft}^3)$$

⑤ Volume of Filtration Basin must be greater to or equal to 20% of TOTAL WQV

$$V_f \geq 0.20\, WQV = (13{,}187.84 \text{ ft}^3)$$

⑥ Volume of Hazardous Materials Trap = 10,000 gal = 1,336.8 ft^3

Turner Collie & Braden Inc.
Engineers • Planners • Project Managers

COMPUTATION SHEET

SUBJECT 45183 Sup 3
Pond Springs Pond
JOB NO. _____ SHEET NO. _____ OF _____
BY CDB DATE 10/21/98
CHKD BY _____ DATE _____

Pond Check - Revised some drainage areas

Orig. 36.33

Revised 35.82 ac - less than original So if actual numbers are greater than orig. than OK

	Actual	Required	
S.P.	66,257.44 CF	65,939.2 CF	WQV
	46639 SF	46593 SF	As
F.P.	46650 SF	36633 SF	Af
	40,675 CF	13,187.8 CF	1/2

Turner Collie & Braden Inc.
Engineers • Planners • Project Managers

400 West 15th Street
Suite 500
Austin, Texas 78701
(512) 472-4519
Fax (512) 472-7519
E-Mail: tcbaus@io.com

RECEIVED
JAN 15 1999
TNRCC-[illegible]
Austin Region 11

TO: Sylvia Pope	FAX# 499-2846
FROM: Connie Bills	PHONE: 512-472-4519 FAX: 512-472-7519
DATE: 1/7/99	COVER + 7 PAGE(S)
REGARDING:	

MESSAGE 1/7/99

Included are the D.A. maps and Impervious Cover calculations. I will get you the pond calcs later today.

Connie Bills

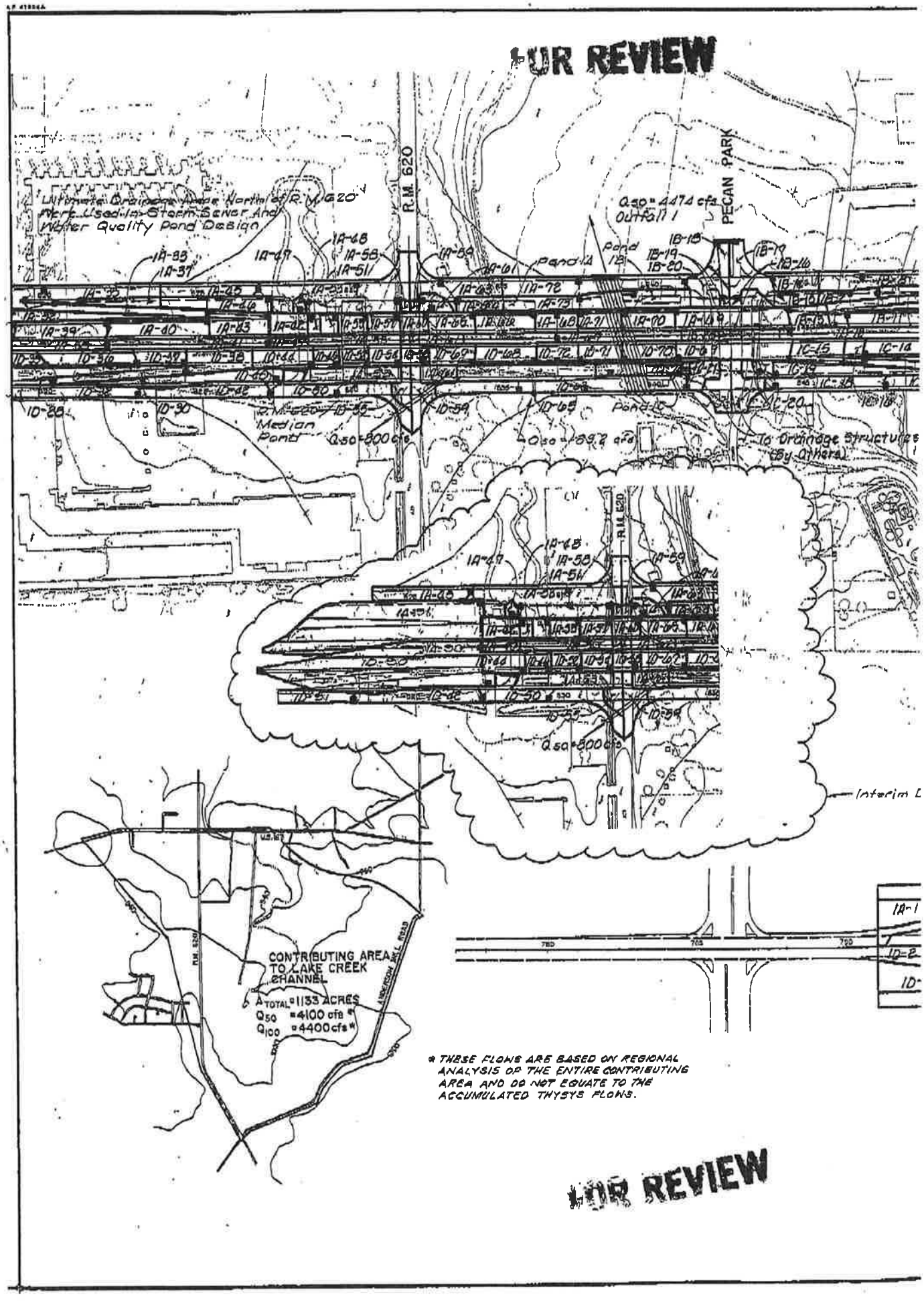
FOR REVIEW
R.M. 620
PECAN PARK
Ultimate Drainage Area North of R.M. 620 Used In Storm Sewer And Water Quality Pond Design
Pond A
Pond B
Q50 = 447.4 cfs
Outfall 1
Q50 = 800 cfs
Q50 = 89.7 cfs
To Drainage Structures By Others
Interim L
CONTRIBUTING AREA TO LAKE CREEK CHANNEL
A TOTAL = 1133 ACRES
Q50 = 4100 cfs *
Q100 = 4400 cfs *
* THESE FLOWS ARE BASED ON REGIONAL ANALYSIS OF THE ENTIRE CONTRIBUTING AREA AND DO NOT EQUATE TO THE ACCUMULATED THYSYS FLOWS.
FOR REVIEW

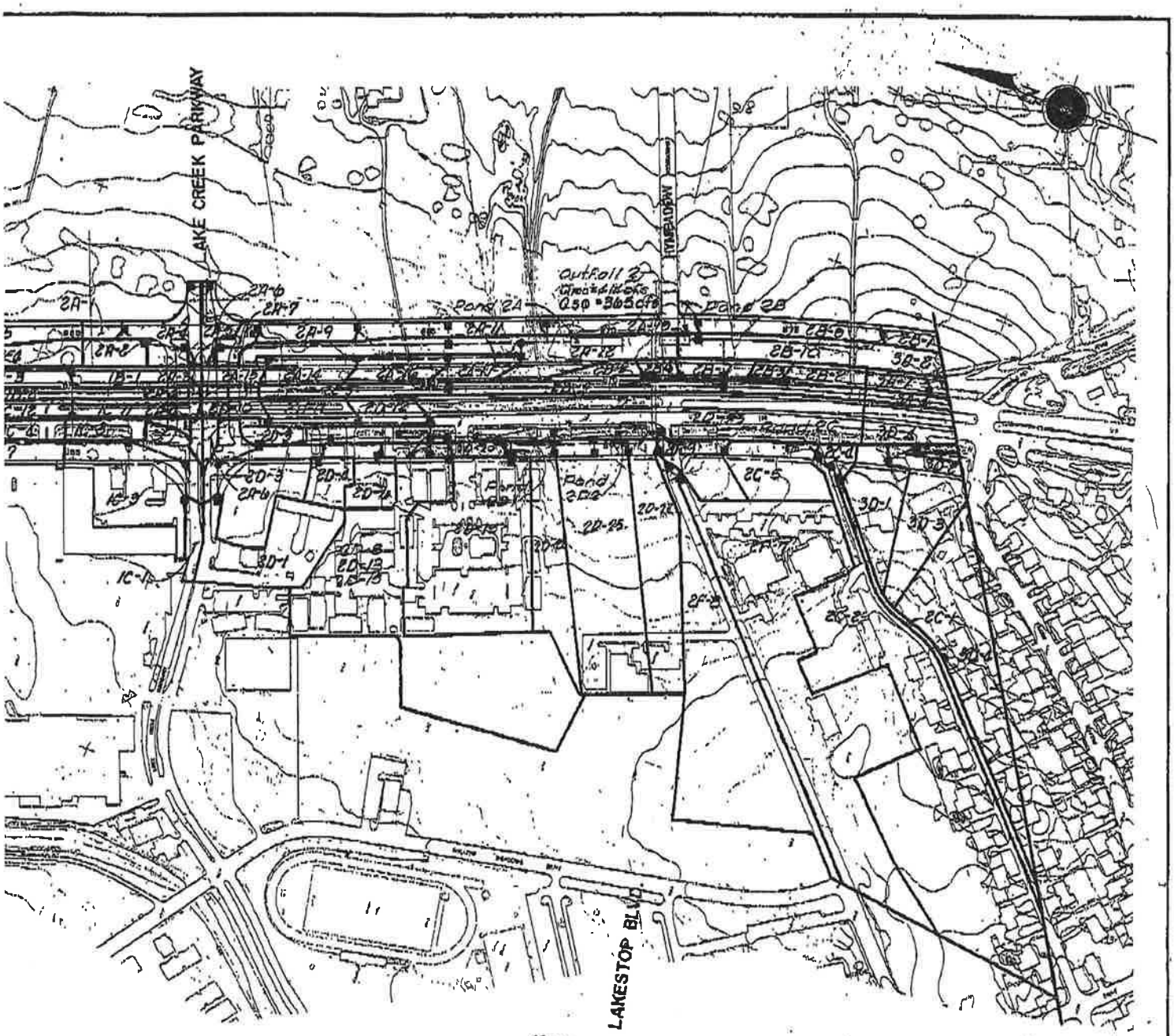

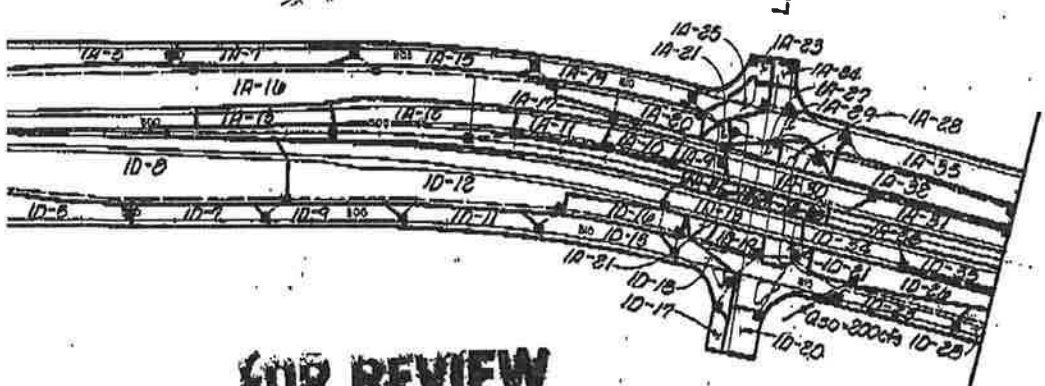

FOR REVIEW

NO.	DATE	REVISION	APPROV.
4			
3			
2			
1			

Turner Collie & Braden Inc.
CONSULTING ENGINEERS
TEXAS AUSTIN DALLAS HOUSTON SAN ANTONIO CORPUS CHRISTI

AUSTIN | JOB NO. 72-07401-022

STATE DEPARTMENT OF HIGHWAYS AND PUBLIC TRANSPORTATION

©1998 TxDOT

DRAINAGE AREA MAP

SCALE: 1" = 200' SHEET 1 OF 3

Designed DAN		STATE	FEDERAL AID PROJECT NO.			
Checked	6	TEXAS	F267(16)			U.S.183
Drawn WWS	STATE DIST. NO.	COUNTY	CONTROL NO.	SECTION NO.	JOB NO.	SHEET NO.
Checked DAN	14	WILLIAMSON	151	05	38	2/4a

STATE OF TEXAS
Robert W. Barnett
REGISTERED PROFESSIONAL ENGINEER

Robert W. Barnett
5-07-88

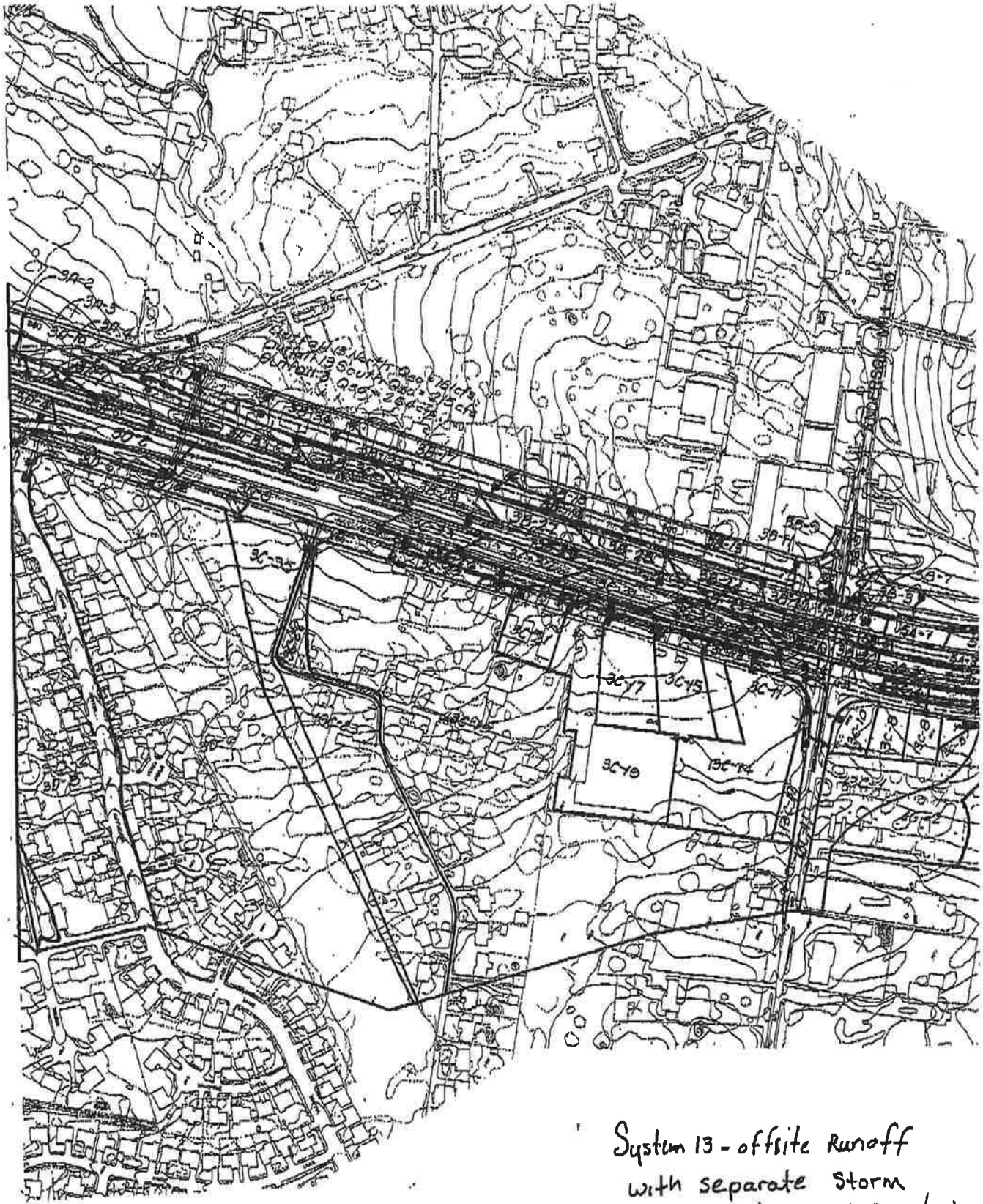

FOR REVIEW

System 13 - offsite Runoff with separate Storm Sewer System, Not entering ponds.

FOR REVIEW



System 4 is offsite runoff which is segregated to its own storm sewer system.

NO.	DATE	REVISION	APPROV.
4			
3			
2			
1			

Turner Collie & Braden Inc.
CONSULTING ENGINEERS
TEXAS AUSTIN INDIANAPOLIS HOUSTON PORT ARTHUR
COLORADO OKLAHOMA

OFFICE	JOB NO.	ASSIGNED
AUSTIN	72-07401-022	

STATE DEPARTMENT OF HIGHWAYS AND PUBLIC TRANSPORTATION

©1998 TxDOT

DRAINAGE AREA MAP

SCALE: 1"=200' SHEET 2 OF 8

DESIGNED DAN	FED. RD. DIV. NO.	STATE	FEDERAL AID PROJECT NO.				HIGHWAY NO.
DRAWN	6	TEXAS	F 257(16)				U.S. 183
CHECKED WWS	STATE DIST. NO.	COUNTY	CONTROL NO.	SECTION NO.	JOB NO.		SHEET NO.
QUANTITIES DAN	14	WILLIAMSON	161	05	38		264b

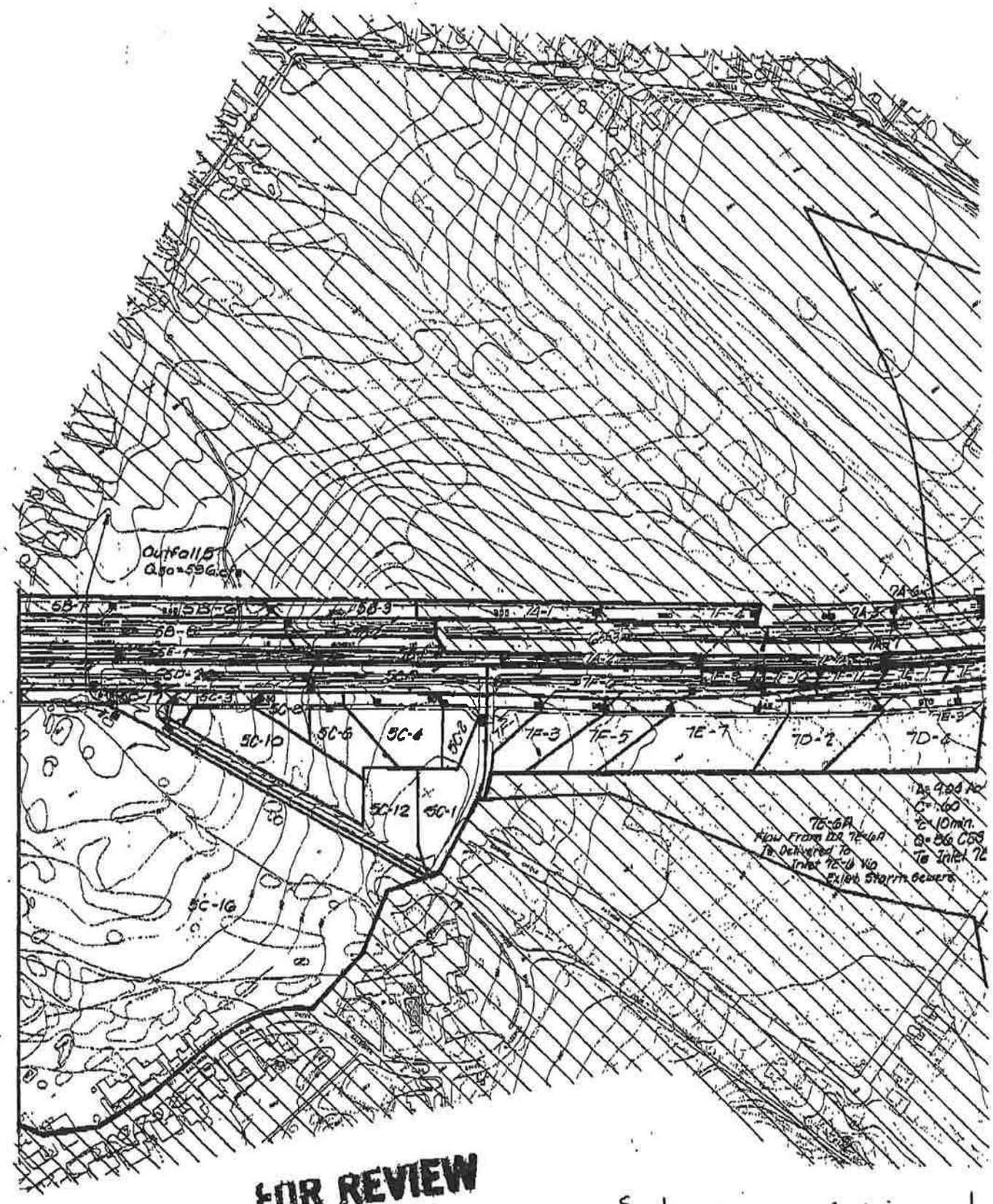

FOR REVIEW

System 7 part of Spicewood Springs WPAP submitted earlier. Around 1993-94.

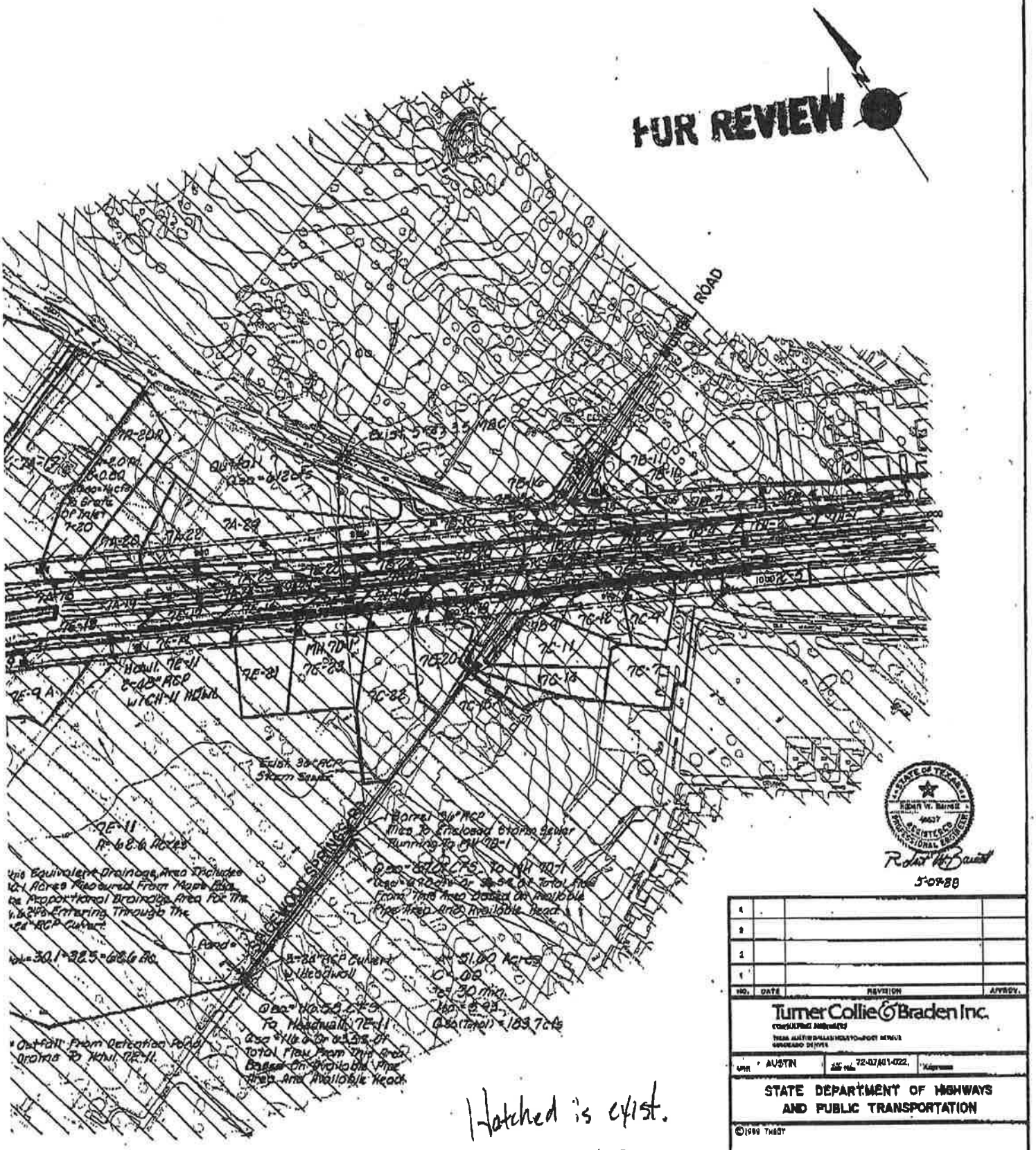
FOR REVIEW
ROAD
Exist. 36" RCP Storm Sewer
Barrel 36" RCP Inlet to Enclosed Storm Sewer Running to MH 7E-1
Pond
Outfall From Detention Pond Draining To Inlet 7E-11
Exist. 5-48" RCP
Exist. 3-48" RCP
Exist. 4-48" RCP
Exist. 3-48" RCP
Exist. 3-48" RCP
Exist. 3

US 183 UPDATE
TCB Job no. 72-07401-022

DRAINAGE AREAS ENTERING WATER QUALITY PONDS

7/8/98

	TOTAL AREA being treated	CITY OF AUSTIN AREA (offsite)	TxDOT AREA (onsite)	% COA AREA	% TxDOT AREA	COA IMPERVIOUS COVER	TxDOT IMPERVIOUS COVER	COMBINED IMPERVIOUS COVER FOR TREATED AREAS
	ac	ac	ac					
System 1 N	61.28	18.55	42.73	**30.27%**	**69.73%**	95.00%	68.87%	76.78%
System 1 S	14.44	1.05	13.39	**7.27%**	**92.73%**	95.00%	80.81%	81.84%
System 2	46.624	26.719	19.905	**57.31%**	**42.69%**	78.88%	65.42%	73.13%
System 3	35.815	8.314	27.501	**23.21%**	**76.79%**	90.38%	80.07%	82.46%
System 5	102.75	68.975	33.775	**67.13%**	**32.87%**	44.68%	77.17%	55.36%

JAN. 7.1999 9:13AM TURNER COLLIE BRADEN NO.848 P.8/8

9812010l ENTERED CLE

City of Austin

Founded by Congress, Republic of Texas, 1839
Municipal Building, Eighth at Colorado, P.O. Box 1088, Austin, Texas 78767 Telephone 512/499-200

January 8, 1999

TRANSMITTED VIA FAX

Ms. Patricia Reeh
Edwards Aquifer Protection Program
Austin Region Office
Texas Natural Resource Conservation Commission
1921 Cedar Bend, Suite 150
Austin, TX 78758

JAN 1 9 1999

TNRCC-Field Operations
Austin Region 11

Re: Application for Approval of Water Pollution Abatement Plan for TXDOT expansion of US Highway 183 from Fathom Circle to Lakeline Boulevard, Austin, Texas.

Dear Ms. Reeh:

Watershed Protection Department staff have reviewed the application for the above-referenced project. The site is within the Recharge Zone of the Northern Edwards Aquifer and is within the Lake Creek watershed. The following comments are submitted for your consideration.

1. The Water Pollution Abatement Plan (WPAP) did not contain detailed information regarding the location and construction of underground sedimentation/filtration basins and the design calculations for water quality control structures. Connie Bills of Turner, Collie & Braden Inc. provided this information upon our request. A copy of the additional information is provided as an attachment to this letter.

2. The storm water pollution prevention plan (SWPPP) states that excess dirt on the road shall be broomed as needed or as directed by the engineer. The brooming should be conducted with a vacuum broom that removes material rather than a power broom device in order to prevent runoff of residual sediment from the road surface.

3. The maintenance plan for stormwater controls that was included in the application is inappropriate for the underground sedimentation/filtration basins and the proposed wet pond due to the unique requirements for inspection and maintenance of these structures. Please require that TXDOT submit a maintenance plan and schedule specific to the underground sedimentation/filtration basins and a plan specific to the wet pond. We recommend that the structures be inspected monthly, following any rainfall with more than 1 inch of total accumulation, and immediately following the spill or any harmful substance that may have entered the stormsewer system. If a roadway spill occurs that results in a release to an underground sedimentation/filtration basin, then the basin chambers should be inspected and tested to determine if removal of the filtration material is warranted.

4. A device to capture trash should be placed at the inlet to the underground sedimentation/filtration basins. Accumulated debris and trash should be removed from these devices on a routine basis.

5. The wet pond design and sizing equations used appear to be appropriate for this type of water quality control structure.

6. The maintenance plan for the wet pond should include a description of vegetation maintenance, nuisance vegetation removal, provisions for providing make-up water in the event of drought, and a procedure describing how to measure accumulated sediment and determining when to remove it.

7. The sedimentation/filtration basins have been designed using the recommended capture rates proposed in the Draft TNRCC Technical Guidance Manual for Permanent Structural BMPs. According to the WPAP, the project capture volumes and load reductions meet or exceed the criteria for capture of the first one-half inch of stormwater runoff. The City of Austin commends TXDOT for being proactive in the design of the stormwater controls to comply with the adopted Edwards Rules but would like to suggest that TXDOT consider using sizing criteria presented in our Environmental Criteria Manual (ECM). These suggestions are as follows:

Water Quality Volume (WQV) for Sedimentation-Sand Filtration Systems – The WQV should increase by 0.10" for each 10% increase in impervious cover over 20%. The criteria currently being used for ponds in Austin is:

Impervious Cover	Water Quality Volume (inches)
≤ 20%	0.50
30%	0.60
40%	0.70
50%	0.80
60%	0.90
70%	1.00
80%	1.10
90%	1.20
100%	1.30

Based on a review of the drainage area information, volumes of between 0.85 and 1.15" would be more appropriate.

Sedimentation-Sand Filtration Surface Areas – When sizing the sedimentation and filtration basin surface areas, the equations referred to in the WPAP assume that all ponds will be of the "full" sedimentation-filtration design, which requires an extended detention outlet from the sedimentation pond to the filtration basin. If only a gabion wall is placed between the two, this is considered to be a "partial" sedimentation-filtration design, and a larger sand bed area is required (but the overall surface area of the system is not larger). For partial systems the sizing equations are:

$As = WQV * (1/Ds - 1/10)$
$Af = WQV/10$

Where:
As = surface area (square feet) of the sedimentation chamber (basin);
Af = surface area (square feet) of the filtration basin;
WQV = water quality volume (cubic feet); and
Ds = depth of the sedimentation chamber (basin) (feet).

These suggestions are presented in light of the high impervious cover noted for the project, recognizing that the TGM criteria would result in more frequent bypasses of untreated stormwater in this impervious cover range. Also, the Draft TGM has not received final approval by the TNRCC and therefore; the most protective approved criteria (COA ECM) is suggested.

8. The proposed wet pond in the vicinity of Roxie Drive is likely to intercept the water table under high rainfall conditions as indicated by recent construction problems encountered during construction of a wastewater line along Roxie Drive. The water table was located at a depth of approximately 12 feet below ground surface directly behind the Southwestern Bell building. A void horizon occurs at this depth and likely conveys flow laterally towards the Pond Springs area that occurs south of Anderson Mill Road east of the Turtle Rock area.

Thank you for the opportunity to review and comment on these plans. Please feel free to contact Sylvia Pope at 499 - 3429 or me at 499-2224 if you have any questions regarding these comments.

Sincerely,

Edward D. Peacock

Edward D. Peacock, P.E.
Section Manager, Water Resources Evaluation
Environmental Resources Management Division
Watershed Protection Department

cc: Central Files
Nancy L. McClintock, Division Manager, Environmental Resources Management
Sylvia Pope, Hydrogeologist, ERM, WRE
Pat Hartigan, ERM, Watershed Management
Chuck Lesniak, ERM, Water Quality Regulations

Turner Collie & Braden Inc.
Engineers • Planners • Project Managers

400 West 15th Street
Suite 500
Austin, Texas 78701
(512) 472-4519
Fax (512) 472-7519
E-Mail: tcbaus@io.com

RECEIVED
JAN 15 1999
TNRCC-Region
Austin Region

TO: Sylvia Pope	FAX# 499-2846
FROM: Connie Bills	PHONE: 512-472-4519 FAX: 512-472-7519
DATE: 1/6/99	COVER + __ PAGE(S)
REGARDING: US 183 Water Quality Ponds	

MESSAGE 1/6/99

The water quality ponds which are underground are labeled as Lakecreek 1A, 1B, and 1C and Hymeadow 2A, 2B, 2C, 2D1 and 2D2. So there are a total of 8 ponds underground situated between the main lanes and frontage roads. I have included some structural details showing the maintenance access hatch for these ponds. As far as the maintence sheed schedule, Gary Lantrip included TXDOT's standard schedule. Because these structures are unique and innovative TXDOT will adjust their Inspection and Maintenance as necessary to accomodate them. If you have questions concerning this, please call Gary. Construction of these facilities will include excavation similar to that required for box culverts and manholes, etc., Saw-cutting if necessary, no blasting. Forms will be put in place and the structures will be poured in place. These structures are similar to a large box culvert with columns in center to support the lid.

Turner Collie & Braden Inc.

Engineers • Planners • Project Managers

400 West 15th Street
Suite 500
Austin, Texas 78701
(512) 472-4519
Fax (512) 472-7519
E-Mail: tcbaus@io.com

TO:	FAX#
FROM:	PHONE: 512-472-4519 FAX: 512-472-7519
DATE:	COVER + __ PAGE(S)
REGARDING: pg 2	

MESSAGE 1/6/99

The wet pond labeled as the Woods Pond is at elevation 906' at its deepest point. This puts the FL approximately 14' below existing natural ground. If you have any questions, please call

Connie Bell

NOT FOR CONSTRUCTION

1/6/99

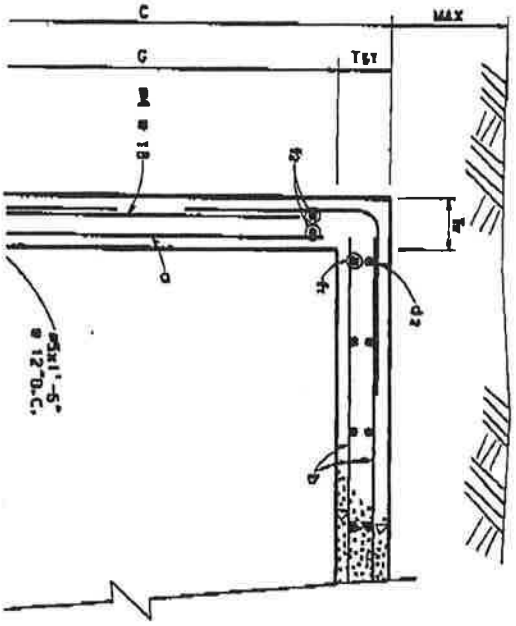

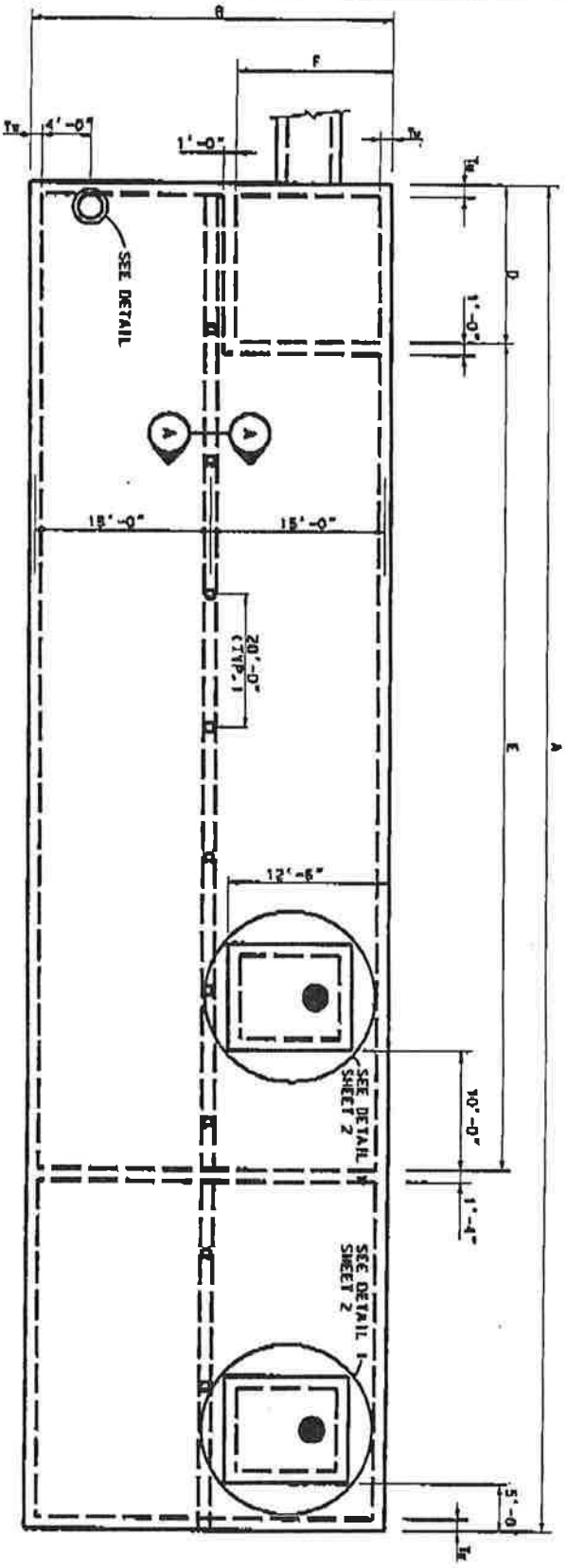

UNDERGROUND POND PLAN

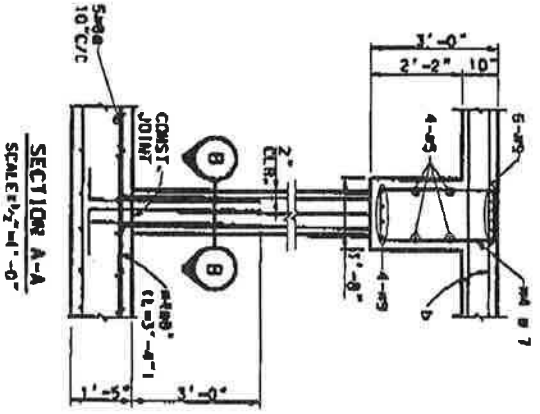

SECTION A-A
SCALE: 3/4"=1'-0"

FOR REVIEW

ESTIMATED QUANTITIES OF REINFORCING FOR COLUMNS AND BEAM					
POND DESIGNATION	#4 (LBS)	#5 (LBS)	#6 (LBS)	#7 (LBS)	#8 (LBS)
1A	855	669	1,383	5,451	
1B	688	537	1,106	4,380	
1C	635	496	1,041	4,040	
2A	730	617	1,185	5,026	
2B	459	366	609	2,981	

REINFORCING LA		
BAR SIZE	TOP BARS	MIN LAP
4	24"	
5	30"	
6	36"	
8	58"	

POND DESIGN	
1A	
1B	
1C	
2A	
2B	
2C	
2D	
2E	
2F	
2G	
2H	
2I	
2J	
2K	
2L	
2M	
2N	
2O	
2P	
2Q	
2R	
2S	
2T	
2U	
2V	
2W	
2X	
2Y	
2Z	

NOT FOR CONSTRUCTION

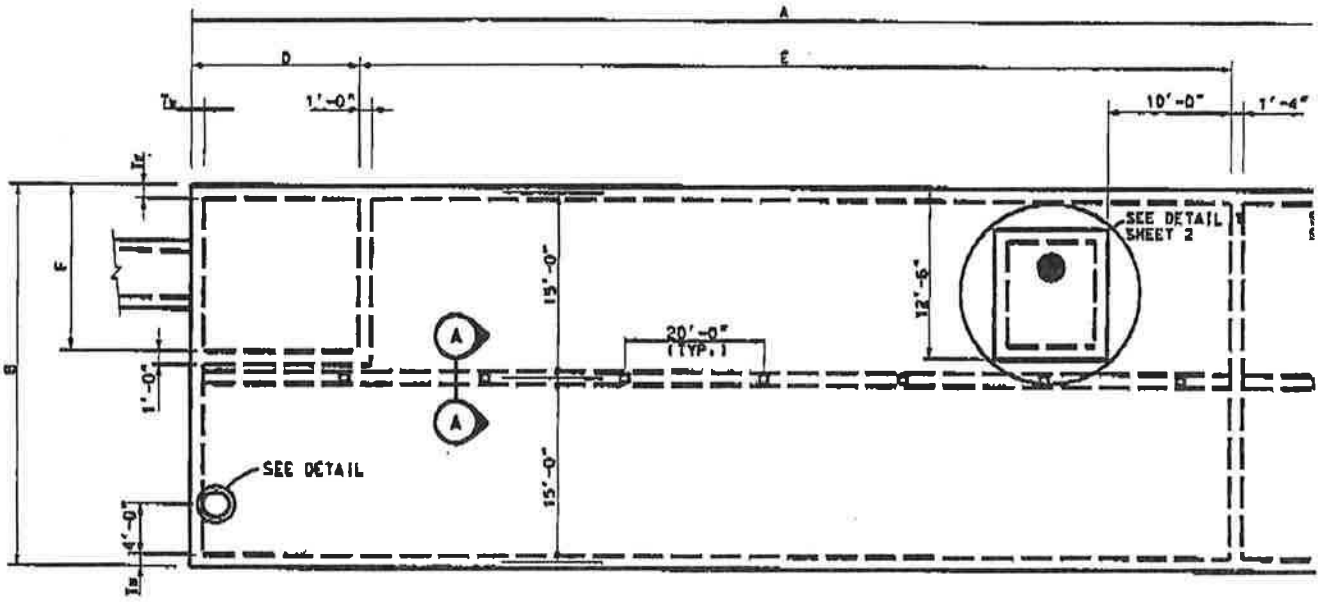

UNDERGROUND POND PLAN

FOR REVIEW

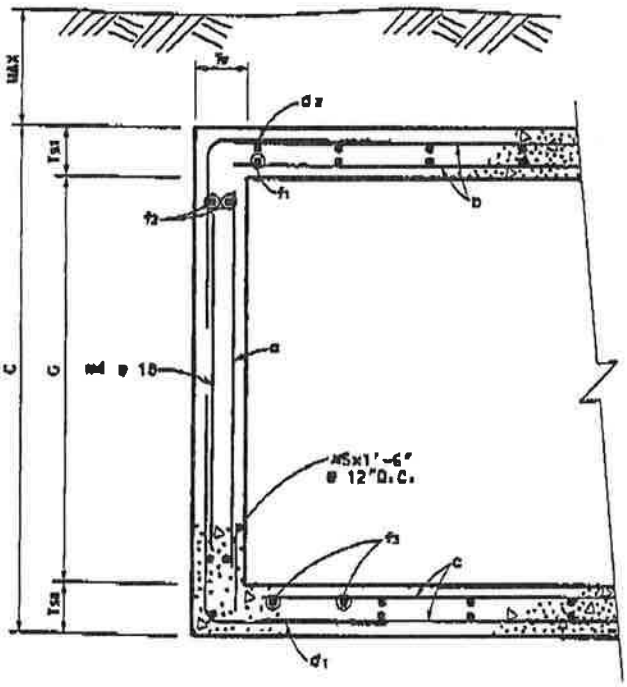

TYPICAL SECTION

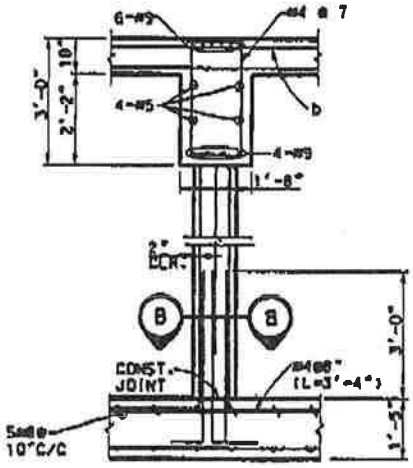

SECTION A-A
SCALE: 1/4"=1'-0"

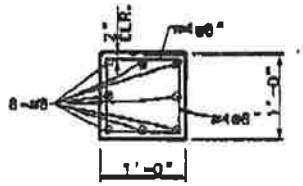

SECTION B-B
SCALE: 1"=1'-0"

1/6/99

NOT FOR CONSTRUCTION

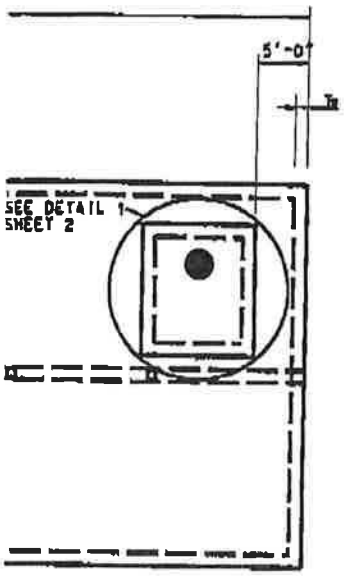

UNDERGROUND POND REINFORCING TABLE

POND DESIGNATION	BARS a		BARS b		BARS c		BARS d1		BARS d2		BARS f1 , f2 , f3 (#4)		
	SIZE	SPACING	SIZE	SPACING	SIZE	SPACING	SIZE	SPACING	SIZE	SPACING	f1 Spa.	f2 Spa.	f3 Spa.
1A	#6	@12"	#6	@6"	#8	@10"	#5	@12"	#5	@12"	@6"	@12"	@7"
1B	#6	@12"	#6	@6"	#8	@10"	#5	@12"	#5	@12"	@6"	@12"	@7"
1C	#6	@12"	#6	@6"	#8	@10"	#6	@12"	#5	@12"	@6"	@12"	@7"
2A	#6	@12"	#6	@6"	#8	@10"	#5	@12"	#5	@12"	@6"	@12"	@7"
2B	#6	@12"	#6	@6"	#8	@10"	#6	@12"	#5	@12"	@6"	@12"	@7"
2C	#6	@12"	#6	@6"	#8	@10"	#6	@12"	#5	@12"	@6"	@12"	@7"
2D1	#6	@12"	#6	@6"	#8	@10"	#6	@12"	#5	@12"	@6"	@12"	@7"
2D2	#6	@12"	#6	@6"	#8	@10"	#6	@12"	#5	@12"	@6"	@12"	@7"

UNDERGROUND POND DIMENSION TABLE

POND DESIGNATION	A	B	C	D	E	F	G	Tw	Ts1	Ts2	MAX FILL *
1A	160'-4"	32'-0"	9'-3"	22'-0"	97'-0"	19'-0"	7'-0"	1'-0"	10"	1'-5"	2'-3"
1B	126'-10"	32'-0"	9'-3"	15'-6"	77'-0"	11'-0"	7'-0"	1'-0"	10"	1'-5"	3'-6"
1C	118'-10"	32'-0"	9'-3"	15'-6"	81'-6"	11'-0"	7'-6"	1'-0"	10"	1'-5"	1'-9"
2A	147'-10"	32'-0"	9'-3"	15'-6"	92'-0"	11'-0"	7'-0"	1'-0"	10"	1'-5"	6'-7"
2B	87'-8"	32'-0"	9'-6"	15'-7 1/16"	44'-4"	11'-0"	7'-0"	1'-0"	10"	1'-5"	5'-6"
2C	134'-0"	32'-0"	10'-3"	15'-4 11/16"	91'-3 3/8"	11'-0"	8'-0"	1'-0"	10"	1'-5"	3'-4"
2D1	161'-4"	32'-0"	10'-3"	22'-0"	110'-0"	13'-0"	8'-0"	1'-0"	10"	1'-5"	4'-4"
2D2	211'-4"	32'-0"	10'-3"	13'-1/8"	103'-3"	22'-0"	8'-0"	1'-0"	10"	1'-5"	5'-4"

*AVERAGE FILL HEIGHT

REINFORCING LAP SPLICE & EMBEDMENT SCHEDULE

BAR SIZE	MIN LAP LENGTH		MIN EMBEDMENT LENGTH			
	TOP BARS	OTHER BARS	TOP BARS		OTHER BARS	
			STR.	STD. HOOK	STR.	STD. HOOK
4	24"	20"	17"	9"	12"	7"
5	30"	24"	21"	10"	15"	8"
6	36"	28"	25"	10"	18"	8"
8	58"	41"	42"	15"	30"	12"

GENERAL NOTES:

1. DESIGNED ACCORDING TO CURRENT AASHTO 1996 STANDARD SPECIFICATIONS.
2. DESIGNED FOR HS20 LOADING AND TO THE MAXIMUM FILL HEIGHT SHOWN.
3. ALL REINFORCING SHALL BE GRADE 60 KSI.
4. ALL CONCRETE SHALL HAVE A MINIMUM 28 DAY COMPRESSIVE STRENGTH OF 3000 PSI.
5. REINFORCING BARS SHALL BE ADJUSTED TO PROVIDE A MINIMUM OF 1½" CLEAR COVER.
6. ALL DIMENSIONS ARE IN FEET AND INCHES AND ALL MASS IS IN POUNDS UNLESS OTHERWISE NOTED.

ESTIMATED QUANTITIES OF REINFORCING FOR COLUMNS AND BEAM

POND DESIGNATION	#4 (LBS)	#5 (LBS)	#8 (LBS)	#9 (LBS)
1A	855	669	1,383	5,451
1B	688	537	1,186	4,380
1C	535	496	1,041	4,040
2A	790	617	1,185	5,026
2B	468	366	609	2,981
2C	715	559	1,314	4,556
2D1	968	757	1,752	6,165
2D2	1,129	882	1,970	7,185

ESTIMATED QUANTITIES

POND DESIGNATION	TOP SLAB CONC. (CY)	BOTT. SLAB CONC. (CY)	REIN. CONC WALLS (CY)
1A	158	158	107.9
1B	152.7	152.7	91.6
1C	140.8	140.8	92.6
2A	175.2	175.2	101.4
2B	68.8	68.8	70.3
2C	158.8	158.8	107.7
2D1	214.9	214.9	135.8
2D2	250.5	250.5	153.5

FOR REVIEW

DOCUMENT IS FOR INTERIM REVIEW AND NOT INTENDED FOR CONSTRUCTION, BIDDING, OR PERMIT PURPOSES

WALLY N. BURNS, P.E.

44162
TEXAS SERIAL NO.

01/04/99
DATE

UCHOTL1.DGN

Turner Collie & Braden Inc.
Engineers • Planners • Project Managers

SUITE

© 1998 Texas Department of Transportation

US 183

WATER QUALITY PONDS
STRUCTURAL DETAILS

SHEET 5 OF 5

DIST	COUNTY	SHEET NO.
18	WILLIAMSON	345

1/6/99

For Maintence
Top will be
lifted off
+ a bobcat
lowered
into pond.
Conner B.

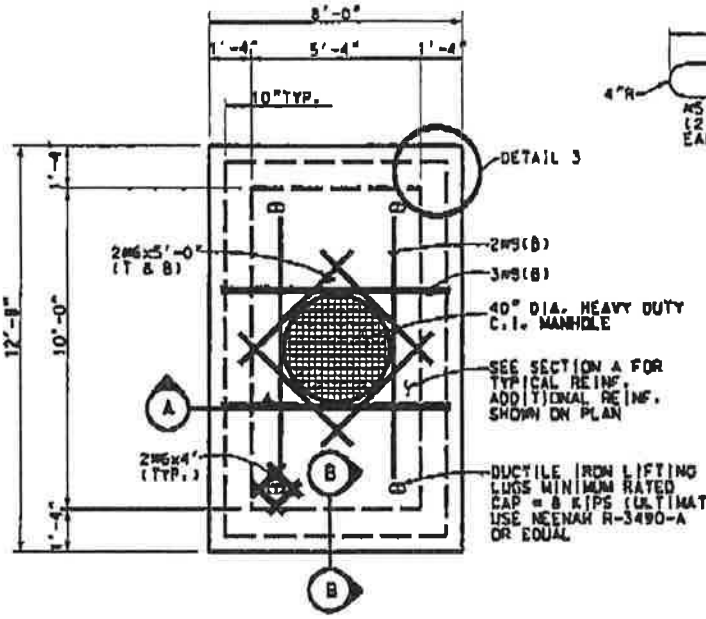

MAINTENANCE ACCESS HATCH

DETAIL 1

SCALE: 3/8" = 1'-0"

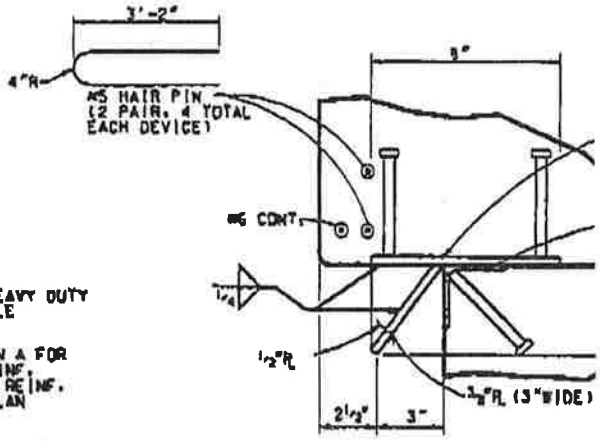

PROVIDE 8 DEVICES (GALV. AFTER FABRICATI 2 EACH SIDE

DETAIL 2

ALIGNMENT DEVICE

SCALE: 3" = 1'-0"

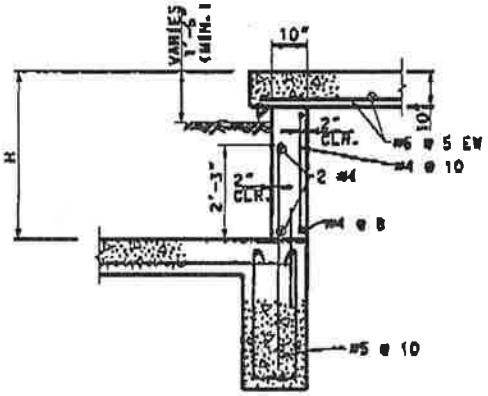

SECTION A

SCALE: 1 1/2" = 1'-0"

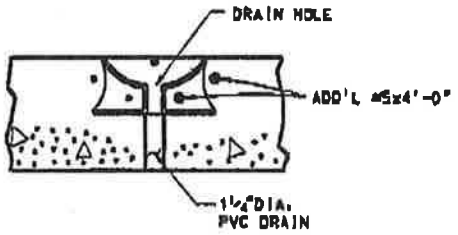

SECTION B

SCALE: 1" = 1'-0"

NOT FOR CONSTRUCTION

FOR REVIEW

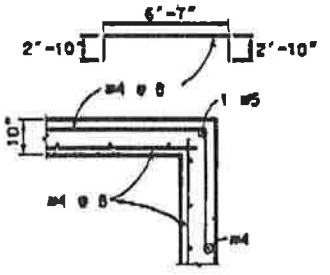

DETAIL 3

HORIZONTAL REINFORCEMENT

SCALE: 1/2" = 1'-0"

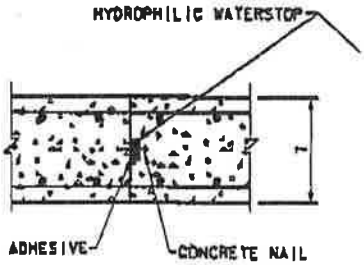

SLABS

1/6/99

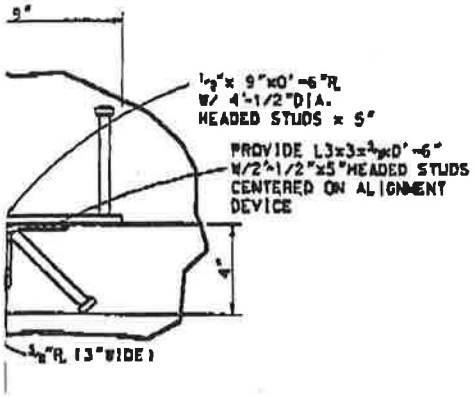

: 8 DEVICES
AFTER FABRICATION)
SIDE

AIL 2

NT DEVICE
3" = 1'-0"

FOR REVIEW

NOT FOR CONSTRUCTION

GENERAL NOTES:

1. DESIGNED ACCORDING TO CURRENT AASHTO 1996 STANDARD SPECIFICATIONS.
2. DESIGNED FOR HS20 LOADING AND TO THE MAXIMUM FILL HEIGHT SHOWN.
3. ALL REINFORCING SHALL BE GRADE 60 KSI.
4. ALL CONCRETE SHALL HAVE A MINIMUM 28 DAY COMPRESSIVE STRENGTH OF 3000 PSI.
5. REINFORCING BARS SHALL BE ADJUSTED TO PROVIDE A MINIMUM OF 1 1/2" CLEAR COVER.
6. ALL DIMENSIONS ARE IN FEET AND INCHES AND ALL MASS IS IN POUNDS UNLESS OTHERWISE NOTED.

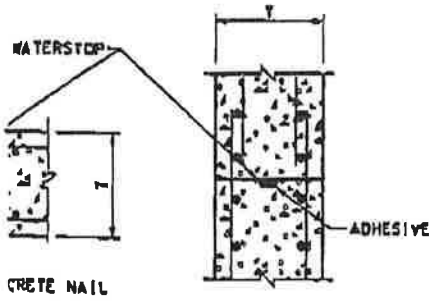

WALLS

DOCUMENT IS FOR INTERIM REVIEW AND NOT INTENDED FOR CONSTRUCTION, BIDDING, OR PERMIT PURPOSES

WALLY R. BURNS, P.E.

44162
TEXAS SERIAL NO.

01/04/99
DATE

Turner Collie & Braden Inc.
Engineers • Planners • Project Managers

SUTTON 82-14004-011

© 1998 Texas Department of Transportation

US 183
WATER QUALITY PONDS
STRUCTURAL DETAILS

SCALE: AS NOTED SHEET 2 OF 5

	STATE	FEDERAL AID PROJECT NO.	
6	TEXAS	FOST(16)	US 183

STATE DIST. NO.	COUNTY				
14	WILLIAMSON	151	9	38	246

MDP072.DGN

Texas Department of Transportation

P.O. DRAWER 15426 • AUSTIN, TEXAS 78761-5426 • (512) 832-7000

December 1, 1998

Ms. Christine Connor
Texas Natural Resource Conservation Commission
Region 11
1921 Cedar Bend, Ste. 150
Austin, Texas 78758-5336

Dear Ms. Connor:

TRANSMITTAL of WPAP - US 183, Main Lanes, Frontage, and Drainage improvements.

Four copies of the WPAP for the above are attached. Originally it was planned to first do the offsite drainage work near the Woods Fun Center, (just north of Hunter's Chase), and submit the roadway work later. That was changed. This WPAP represents the entire project. Since it is a rather large project, there may be other data, calculations, plan sheets, etc. not included within this application that would be helpful for your review. Contact me if additional information is needed.

Sincerely,

J. Gary Lantrip, District Geologist

Attachments: 4 WPAPs

cc: TxDOT ENV

An Equal Opportunity Employer

Texas Department of Transportation

P.O. DRAWER 15426 • AUSTIN, TEXAS 78761-5426 • (512) 832-7000

April 14, 1999

RECEIVED
APR 20 1999
TNRCC Field Operations
Austin Region 11

Ms. Christine Connor
Edwards Aquifer Protection Program
TNRCC Field Operations, Region 11
1921 Cedar Bend Drive, Suite #150
Austin, Texas 78758-5336

Re: Edwards Aquifer Project Program
File No. 98120101

Dear Ms. Connor:

The Texas Department of Transportation is scheduled to begin construction of Drainage Improvement at Woods Property, north of Hunters Chase. This job is scheduled to begin on April 15, 1999.

Please contact Bruce Thurin at 388-3885 if you have any questions regarding this project.

Sincerely,

John A. Roberts, P.E.
Area Engineer

BT/ca
c: Bruce Thurin

ENTERED
4/16/99

Texas Department of Transportation

P.O. DRAWER 15426 • AUSTIN, TEXAS 78761-5426 • (512) 832-7000

April 14, 1999

Ms. Christine Connor
Edwards Aquifer Protection Program
TNRCC Field Operations, Region 11
1921 Cedar Bend Drive, Suite #150
Austin, Texas 78758-5336

Re: Edwards Aquifer Project Program
File No. 98120101

Dear Ms. Connor:

The Texas Department of Transportation is scheduled to begin construction of Drainage Improvement at Woods Property, north of Hunters Chase. This job is scheduled to begin on April 15, 1999.

Please contact Bruce Thurin at 388-3885 if you have any questions regarding this project.

Sincerely,

John A. Roberts, P.E.
Area Engineer

BT/ca
c: Bruce Thurin

APPENDIX J
HISTORICAL AS-BUILTS

BASIN A

	ITEM 100	ITEM 110	ITEM 110	ITEM 132	ITEM 132	ITEM 160	ITEM 160	ITEM 164	ITEM 164	ITEM 164	ITEM 168	ITEM 169	ITEM 169	ITEM 247	ITEM 310	ITEM 400	ITEM 400	ITEM 402	ITEM 421	ITEM 423	ITEM 432	ITEM 450	ITEM 450	ITEM 460	ITEM 462	ITEM 462	ITEM 462
	Prep. R.O.W.	EXCAV (CHANNEL)	EXCAV (POND)	EMBANK (TY B)	EMBANK (DC) (TY C) MOD	Furn & Plac Tpsl (Cl 2) (4in)	Furn & Plac Tpsl (Cl 2) (6in)	Cell Fib Mulch Seed	Drill Seed (Temp) (Warm)	Drill Seed (Perm) (Urban) (Clay)	Vegetative Watering	SOIL RET BLNKT (CL1) (TY A)	SOIL RET BLNKT (CL2)(TY G)	Fl Bs (TyD Gr6 Cl 2) (Comp In Plac)	Apsh Mat (MC-30)	Struct Excav (Sewer)	Struct Excav (Culv Large)	TRENCH EXCAV PROTECT	CL C Conc. (misc.)	Pond Wall (Cast-In-Place)	RIPRAP (CONC.) (CL B)	Rail (TY PR)	Rail (TY C4) (S)	CMP (Gal Stl 12in)	Conc Box Culv (2'x4')	Conc Box Culv (4'x4')	Conc Box Culv (6'x4')
	AC	CY	CY	CY	CY	SY	SY	SY	SY	SY	MG	SY	SY	TONS	GAL	CY	CY	LF	CY	SF	CY	LF	LF	LF	LF	LF	LF
620 Median Pond	–	–	7313	–	892	–	2144	–	1072	2144	54	–	–	–	–	4130	–	2165	81.3	9811	5.1	–	1055	35	–	–	468
LakeCreek Pond 1A	–	–	(2053)	–	–	–	–	–	–	–	–	–	–	–	–	107	–	95	–	–	–	–	–	6	–	–	–
LakeCreek Pond 1B	–	–	(1908)	–	–	–	–	–	–	–	–	–	–	–	–	42	–	54	–	–	–	–	–	6	–	–	–
LakeCreek Pond 1C	–	–	(1657)	–	–	–	–	–	–	–	–	–	–	–	–	7	–	10	–	–	–	–	–	6	–	–	–
Hymeadow Pond 2A	–	–	(3048)	–	–	–	–	–	–	–	–	–	–	–	–	115	–	62	–	–	–	–	–	6	–	–	–
Hymeadow Pond 2B	–	–	(1529)	–	–	–	–	–	–	–	–	–	–	–	–	2	–	7	–	–	–	–	–	6	–	–	–
Hymeadow Pond 2C	–	–	(2260)	–	–	–	–	–	–	–	–	–	–	–	–	50	–	34	–	–	–	–	–	6	–	–	–
Hymeadow Pond 2D1	–	–	(3286)	–	–	–	–	–	–	–	–	–	–	–	–	212	–	124	–	–	–	–	–	6	–	–	–
Hymeadow Pond 2D2	–	–	(4381)	–	–	–	–	–	–	–	–	–	–	–	–	1893	–	735	–	–	–	–	–	6	–	–	–
Pond Springs Pond	1.04	93	5300	–	441	–	5056	–	2420	4840	121	1403	–	45	–	1656	–	336	57.8	5002	78	–	–	13	–	44	–
Pond Springs Detention Pond	1.15	1162	22610	308	–	1459	2780	–	3391	6782	279	363	2186	141	50	2056	756	1135	–	24431	280	120	140	0	–	–	–
Woods Pond	7.1	2640	64420	1202	8970	–	34364	437	18275	36550	859	6500	6500	275	–	2016	–	649	–	–	166.5	–	–	75	152	–	–
TOTAL	9.29	3895	99643	1510	10303	1459	44,344	437	25158	50316	1313	8266	8686	461	50	12286	756	5406	139.1	39244	529.6	120	1195	171	152	44	468

	ITEM 462	ITEM 462	ITEM 462	ITEM 462	ITEM 462	ITEM 462	ITEM 464	ITEM 464	ITEM 464	ITEM 464	ITEM 465	ITEM 465	ITEM 465	ITEM 465	ITEM 466	ITEM 466	ITEM 466	ITEM 466	ITEM 466	ITEM 466	ITEM 466	ITEM 467	ITEM 481	ITEM 481	ITEM 481	ITEM 481	ITEM 529	ITEM 530
	Conc Box Culv (4'x4')	Conc Box Culv (6'x4')	Conc Box Culv (6'x5')	Conc Box Culv (7'x4')	Conc Box Culv (8'x4')	Conc Box Culv (8'x6')	RCP SEW (D-LOAD) (18")	RCP SEW (D-LOAD) (24")	RCP SEW (D-LOAD) (36")	RCP SEW (D-LOAD) (48")	MAN H (COMPL) TY A	INLET (COMPL) (DROP) (TY I)	INLET (COMPL) (DROP) (TY IB)	INLET (COMPL) (DROP) (TY II)	CULV HDWLL TY PW-45	CULV HDWLL TY MCW-P-15 MOD	CULV HDWLL TY MCW-P-30 MOD	CULV HDWLL TY MCW-P-45 MOD	CULV HDWLL TY MCW-F1-30	CULV HDWLL TY FW-N	CULV HDWLL TY FW-45	S.E.T. TYII	* P.V.C. PIPE (SCH 40) 4"	* P.V.C. PIPE (SCH 40) 6"	* P.V.C. PIPE (SCH 40) 8"	* P.V.C. PIPE (SCH 40) 12"	* CONC. CURB (TY II) (6 IN)	CONC. DRVWY
	LF	LF	LF	LF	LF	LF	LF	LF	LF	LF	EA	EA	EA	EA	EA	EA	EA	EA	EA	EA	EA	EA	LF	LF	LF	LF	LF	SY
620 Median Pond	–	468	–	–	–	–	1487	–	–	210	–	–	–	–	–	–	–	–	–	–	–	1	324	–	77	–	–	21
LakeCreek Pond 1A	–	–	–	–	–	–	–	–	–	–	–	–	–	–	–	–	–	–	–	–	–	–	144	25	100	–	–	–
LakeCreek Pond 1B	–	–	–	–	–	–	–	–	–	–	–	–	–	–	–	–	–	–	–	–	–	–	114	24	58	–	–	–
LakeCreek Pond 1C	–	–	–	–	–	–	–	–	–	–	–	–	–	–	–	–	–	–	–	–	–	–	120	25	14	–	–	–
Hymeadow Pond 2A	–	–	–	–	–	–	6	–	–	–	1	–	–	–	–	–	–	–	–	–	–	–	138	25	65	–	–	–
Hymeadow Pond 2B	–	–	–	–	–	–	–	–	–	–	–	–	–	–	–	–	–	–	–	–	–	–	63	25	11	–	–	–
Hymeadow Pond 2C	–	–	–	–	–	–	–	–	–	–	–	–	–	–	–	–	–	–	–	–	–	–	156	25	38	–	–	–
Hymeadow Pond 2D1	–	–	–	–	–	–	70	–	–	–	–	–	–	–	–	–	–	–	–	–	–	–	288	25	54	–	–	–
Hymeadow Pond 2D2	–	–	–	–	–	–	735	–	–	–	1	–	–	–	–	–	–	–	–	–	–	–	252	27	5	–	–	–
Pond Springs Pond	44	–	–	–	–	–	–	–	–	–	–	–	–	–	–	–	–	–	–	–	–	–	704	–	357	–	–	42
Pond Springs Detention Pond	–	–	96	–	81	84	–	136	287	563	2	3	1	3	–	2	2	–	–	1	–	–	–	–	–	–	90	30
Woods Pond	–	–	30	175	333	28	66	–	–	–	–	2	–	–	1	–	–	1	1	–	1	6	–	–	–	75	–	37
TOTAL	44	468	126	175	414	112	2364	136	287	773	4	5	1	3	1	2	2	1	1	1	1	7	2303	201	779	75	90	130

	ITEM 531	ITEM 550	ITEM 550	ITEM 550	ITEM 3116	ITEM 3116	ITEM 3116	ITEM 5014	ITEM 5014	ITEM 5014	ITEM 8608
	CONC. WALKWAY (5 IN)	CHAIN LINK FENCE (6FT)	VEH. GATE (DOUBLE) (12FT)	VEH. GATE (DOUBLE) (20FT)	ASPH CONC (TY C) (SURF) (PV 32 MIN)	ASPH CONC. (TY C) 2"	ASPH CONC. (TY C) 1½"	GABIONS (3'X1') (GALV)	GABIONS (3'X3') (GALV)	GABIONS (6'X0.5') (GALV)	SAND FILTER SYSTEM
	SY	LF	EA	EA	TONS	TONS	TONS	CY	CY	CY	EA
620 Median Pond	–	–	–	2	–	–	–	–	20	6.7	1 (60'X64')
LakeCreek Pond 1A	–	–	–	–	–	–	–	6.6	10	–	1 (29'X30')
LakeCreek Pond 1B	–	–	–	–	–	–	–	6.6	10	–	1 (24'X30')
LakeCreek Pond 1C	–	–	–	–	–	–	–	6.6	10	–	1 (25'X30')
Hymeadow Pond 2A	–	–	–	–	–	–	–	6.6	10	–	1 (28'X30')
Hymeadow Pond 2B	–	–	–	–	–	–	–	6.6	10	–	1 (15'X30')
Hymeadow Pond 2C	–	–	–	–	–	–	–	6.6	10	–	1 (29'X30')
Hymeadow Pond 2D1	–	–	–	–	–	–	–	6.6	10	–	1 (30'X37')
Hymeadow Pond 2D2	–	–	–	–	–	–	–	6.6	10	–	1 (30'X47')
Pond Springs Pond	–	1050	2	–	–	8.3	–	–	38	10.3	1 (40'X93')
Pond Springs Detention Pond	46	2060	1	–	12	4.1	7.7	–	–	–	–
Woods Pond	–	2010	1	–	–	56.2	–	–	–	–	–
TOTAL	46	5120	4	2	12	68.6	7.7	52.8	138	17.0	10

NOTES:

( ) INCIDENTAL. FOR CONTRACTOR'S INFORMATION ONLY.

* SUBSIDIARY TO VARIOUS BID ITEMS.

Turner Collie & Braden Inc.
ENGINEERS • PLANNERS • PROJECT MANAGERS

AUSTIN | Job No. 61-99100-012 | File

©1998 TxDOT

US 183
WATER QUALITY AND DETENTION POND SUMMARY SHEET

SCALE: AS NOTED

Designed	FED. RD. DIV. NO.	STATE	FEDERAL AID PROJECT NO.		HIGHWAY NO.
KKY	6	TEXAS	NH 09(556)		US 183
Drawn	STATE DIST. NO.	COUNTY	CONTROL NO.	SECTION NO.	JOB NO.	SHEET NO.
JAM	AUS	WILLIAMSON	0151	05	072	48
Checked						
DLG						

DATE: 04/10/99
JOB No.: 72-07401-022
PATH: t:\ 07401022\drainage\wqptbl2.dgn

POINT LOCATION TABLE

POINT No.	STATION BL LT. FRT. RD.	OFFSET	ELEV. FL
1	834+50.75	63.50' RT.	912.78
2	835+68.75	63.50' RT.	912.54
3	835+66.50	75.92' RT.	912.51
4	835+68.75	93.50' RT.	912.54
5	834+50.75	93.50' RT.	912.78
6	836+09.08	63.50' RT.	912.49
7	836+09.08	93.50' RT.	912.49
8	835+70.08	75.92' RT.	912.49
9	835+13.94	93.50'RT	
10	835+13.94	78.80'RT	
11	835+49.38	78.80'RT	
12	835+49.38	93.50'RT	

BL LEFT FRONTAGE ROAD
835+00
LEFT FRONTAGE ROAD
920
4" FL 910.08
6" FL 910.00
2'-6" TYP.
SEE SHEETS 249b & 249c
PECAN PARK
30'x3'x3' GABION
CLEANOUT TYP. 6 PLC.S
5'-0" TYP.
JCT 1A-85 FL 914.28
0.20%
SEDIMENTATION POND
RISER, SEE "RISER DETAIL" SHT. 257.
0.24%
0.17%
0.20%
4" FL 910.41
FILTRATION POND ELEV. 912.49
1.00% MIN
6" PVC (SCH. 40)
8" PVC (SDR 35) @ 0.25%
8" FL 909.66
6" FL 909.78
8" FL 909.70
4" PERFORATED PVC (SCH. 40) @ 1.00% MIN.
SEE SHT. 249b.
7'x4' RCB
FUTURE SH 45 BENT (BY OTHERS)
RM 620
2~30'x3'x1' GABION MATTRESS
Billboard
NORTHBOUND MAIN LANES
Guard Rail
Water
CL US 183
835+00

NOTE:
FOR CURRENT INFORMATION ABOUT GRAVITY & FORCE MAINS IN REFERENCE TO CHANGE ORDER #10, CONTACT CITY OF AUSTIN WATER & WASTEWATER DEPT.

NOTES:

1. SEE WATER QUALITY POND STRUCTURAL DETAILS SHEETS 261a–261d FOR POND DIMENSIONS AND REINFORCEMENT.
2. SEE STORM SEWER PROFILE SHEET 275 FOR FLOWLINES OF RCPs/RCBs AT SPLITTER BOX.
3. SEE WATER QUALITY POND TYPICAL SECTION AND DETAILS SHEET 257 FOR FILTRATION POND DETAILS.

STATE OF TEXAS — REBECCA A. BILLS — 82587 — REGISTERED PROFESSIONAL ENGINEER
Rebecca A. Bills 5-3-99

STATE OF TEXAS — DAVID L. GARRETT — 76626 — REGISTERED PROFESSIONAL ENGINEER
6/22/01 For Revision #1 Only

NO.	DATE	REVISION	APPROV.
4			
3			
2			
1	6/01	CHANGE ORDER 10	

Turner Collie & Braden Inc.
ENGINEERS • PLANNERS • PROJECT MANAGERS

AUSTIN | Job No. 72-07401-022

Texas Department of Transportation

©1998 TxDOT

LAKECREEK (1A) UNDERGROUND WATER QUALITY POND LAYOUT

SCALE: 1"=10'

Designed	CH	FED. RD. DIV. NO.	STATE	FEDERAL AID PROJECT NO.			HIGHWAY NO.
Checked	GL	6	TEXAS	NH 99(556)			U.S.183
Drawn	RP	STATE DIST.NO.	COUNTY	CONTROL NO.	SECTION NO.	JOB NO.	SHEET NO.
Checked	DLG	14	WILLIAMSON	0151	05	072	249a

08:36:53
22 JUN 2001
E:\07401022\GNGORDER\PLOT\roadway\ponds\029249arw.dgn

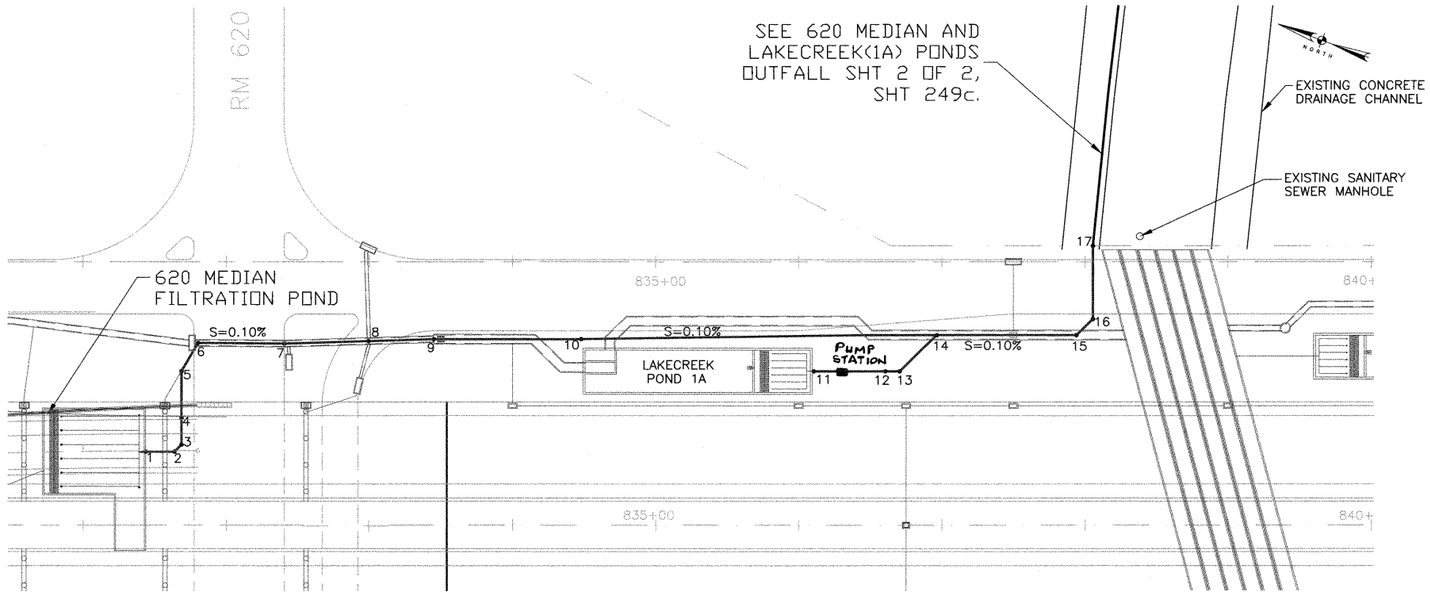

620 MEDIAN AND LAKE CREEK(1A) PONDS OUTFALL

SCALE: 1" = 50'

POINT LOCATION TABLE

POINT No.	STATION BL RT. FRT. RD.	OFFSET	ELEV. FL	PIPE SIZE/TYPE
1	831+43.73	135.92' RT.	911.72	8" PVC
2	831+63.77	135.92' RT.	911.70	8" PVC
3	831+68.73	135.95' RT.	911.69	8" PVC
4	831+68.73	112.51' RT.	911.67	8" PVC IN
	MH TY A TOP 924.1		911.00	18" RCP OUT
5	831+68.73	78.39 RT.	910.96	18" RCP
6	831+80.73	58.26' LT.	910.93	18" RCP
7	832+41.61	58.76' LT.	910.87	18" RCP
8	832+99.73	56.93' LT.	910.81	18" RCP
9	833+45.00	55.50' RT.	910.76	18" RCP
10	834+48.00	52.50' RT.	910.69	18" RCP IN
	MH TY A TOP 924.7		909.81	18" RCP OUT
11	836+10.61	78.50' RT.	909.66	8" PVC
12	836+60.50	78.50' RT.	909.61	8" PVC/18" RCP
13	836+70.50	78.50' RT.	909.60	18" RCP
14	836+96.50	52.50' RT.	909.56	18" RCP
15	837+94.00	52.50' RT.	909.46	18" RCP
16	838+05.56	40.94' RT.	909.44	18" RCP
	MH TY A TOP 922.3			
17	838+05.56	11.50' RT.	909.39	18" RCP

NOTES:

1. SEE SHT 248a FOR 620 MEDIAN FILTRATION POND PLAN.
2. SEE SHT 249a FOR LAKECREEK POND 1A LAYOUT.

PUMP STATION
TOP ELEV = 927.00
BOT. ELEV = 907.58
FE IN = 909.58
FE OUT = 918.50
C.O. #18

STATE OF TEXAS
REBECCA A. BILLS
82567
REGISTERED PROFESSIONAL ENGINEER
Rebecca A. Bills
6-3-99

Turner Collie & Braden Inc.
ENGINEERS • PLANNERS • PROJECT MANAGERS

AUSTIN | 72-07401-022

Texas Department of Transportation

©1998 TxDOT

620 MEDIAN AND LAKECREEK(1A) PONDS OUTFALL

SCALE: AS NOTED | SHT 1 OF 2

Designed	RAB	FED. RD. DIV. NO.	STATE	FEDERAL AID PROJECT NO.				HIGHWAY NO.
Checked	DLG	6	TEXAS	NH 99(556)				U.S.183
Drawn	GWS	STATE DIST. NO.	COUNTY	CONTROL NO.	SECTION NO.	JOB NO.	SHEET NO.	
Checked	DLG	14	WILLIAMSON	0151	05	072	249b	

DATE: 04/27/99
JOB NO. 72-07401-022/pd-out1.dwg

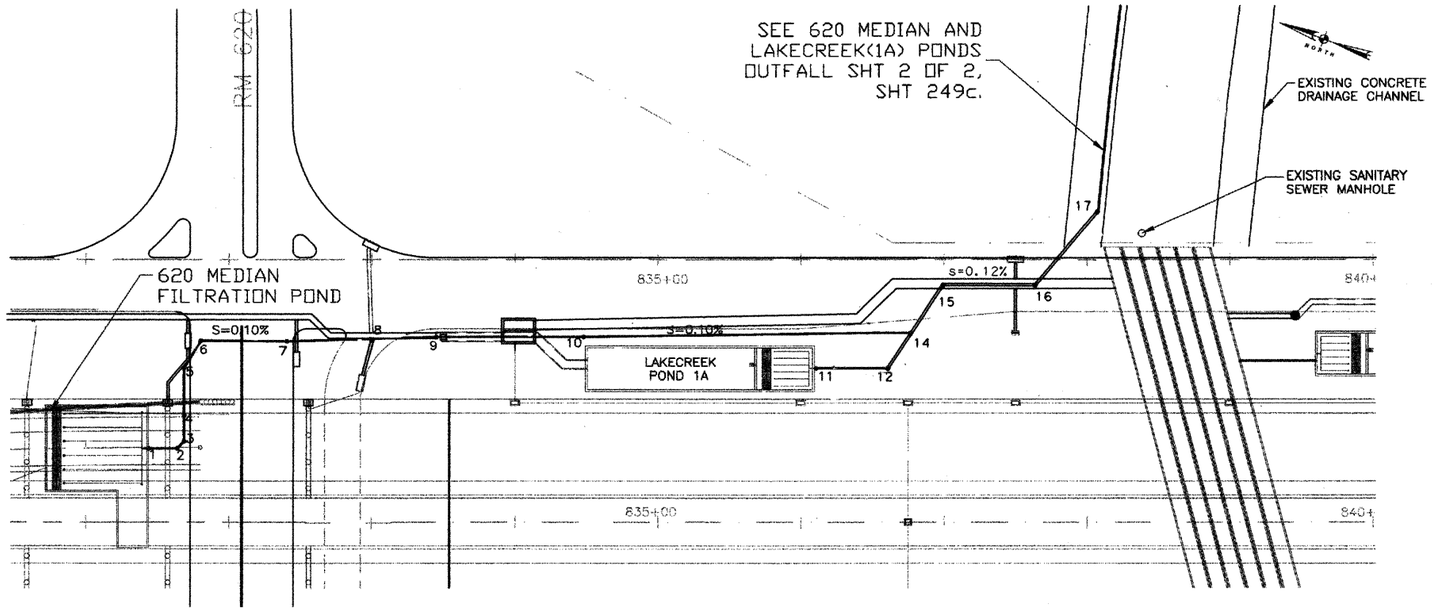

620 MEDIAN AND LAKE CREEK(1A) PONDS OUTFALL

SCALE: 1" = 50'

POINT LOCATION TABLE

POINT No.	STATION BL RT. FRT. RD.	OFFSET	ELEV. FL	PIPE SIZE/TYPE
1	831+43.73	135.92' RT.	911.72	8" PVC
2	831+63.77	135.92' RT.	911.70	8" PVC
3	831+68.73	135.95' RT.	911.69	8" PVC
4	831+68.73	112.51' RT.	911.67	8" PVC IN
	MH TY A TOP 924.1		911.00	18" RCP OUT
5	831+68.73	78.39 RT.	910.96	18" RCP
6	831+80.73	58.26' RT.	910.93	18" RCP
7	832+41.61	58.76' RT.	910.87	18" RCP
8	832+99.73	56.93' RT.	910.81	18" RCP
9	833+45.00	55.50' RT.	910.76	18" RCP
10	834+48.00	52.50' RT.	910.69	18" RCP IN
	MH TY A TOP 924.7		909.81	18" RCP OUT
11	836+10.61	78.50' RT.	909.66	8" PVC
12	836+60.50	78.50' RT.	909.61	8" PVC/18" RCP
~~13~~	~~836+70.50~~	~~78.50' RT.~~	~~909.60~~	~~18" RCP~~
14	836+77.38	52.50' RT.	909.58	18" RCP
	MH TY A TOP = 922.92			
15	836+88.57	17.81' RT.	909.54	18" RCP
16	837+64.00	17.81' RT.	909.47	18" RCP
	~~MH TY A TOP 922.3~~			
17	838+08.33	35.40'LT.	909.36	18" RCP
	MH TY A TOP = 922.78			

NOTES:

1. SEE SHT 248a FOR 620 MEDIAN FILTRATION POND PLAN.
2. SEE SHT 249a FOR LAKECREEK POND 1A LAYOUT.

STATE OF TEXAS MARK E. JONES 81987 REGISTERED PROFESSIONAL ENGINEER

Mark E. Jones 10-04-00 ONLY

STATE OF TEXAS REBECCA A. BILL 82867 REGISTERED PROFESSIONAL ENGINEER

Rebecca A. Bill 6-3-99

1	CHANGE ORDER NO. 10	

Turner Collie & Braden Inc.
ENGINEERS • PLANNERS • PROJECT MANAGERS

AUSTIN | 72-07401-022

Texas Department of Transportation

©1998 TxDOT

620 MEDIAN AND LAKECREEK(1A) PONDS OUTFALL

SCALE: AS NOTED

SHT 1 OF 2

RAB		STATE	FEDERAL AID PROJECT NO.				
DLG	6	TEXAS	NH 99(556)				U.S.183
GWS	STATE DIST.NO.	COUNTY					
DLG	14	WILLIAMSON	0151	05	072	249bA	

CHANGE ORDER NO. 10

DATE: 04/27/99
JOB NO. 72-07401-022/pd-out1.dwg

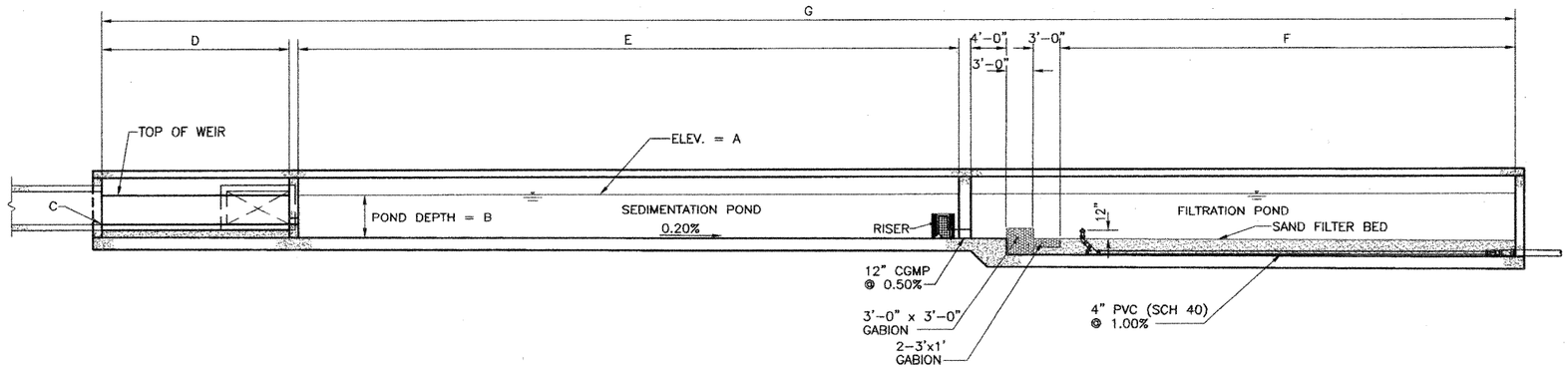

TYPICAL SECTION

SCALE: 1/8" = 1'-0"

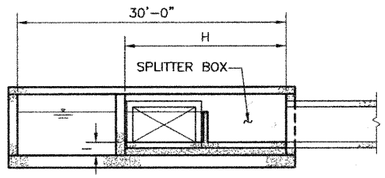

TYPICAL SECTION

SCALE: 1/8" = 1'-0"

POND	A	B	C	D ⚠1	E	F	G	H	I ⚠1	J
1A	917.78	5'-0"	914.28	N/A	96'-0"	29'-0"	158'-4"	18'-0"	N/A	2 3/8"
1B	921.00	5'-0"	918.50	14'-6"	76'-0"	24'-0"	126'-10"	10'-0" ⚠1	2'-6"	2 3/16"
1C	922.75	6'-0"	918.50	14'-6"	65'-0"	25'-0"	116'-10"	18'-0"	1'-9"	2 1/8"
2A	920.92	5'-0"	917.42	14'-6"	91'-0"	28'-0"	145'-10"	10'-0"	1'-6"	2 3/16"
2B	923.49	5'-0"	921.99	14'-6"	43'-0"	15'-0"	84'-10"	10'-0"	3'-6"	1 11/16"
2C	925.90	6'-6"	923.90	14'-6"	76'-0"	31'-0"	133'-10"	10'-0"	4'-6"	1 15/16"
2D1	923.63	5'-6"	920.63	21'-0"	109'-0"	37'-0"	179'-4"	12'-0"	2'-6"	2 5/8"
2D2	921.85	6'-0"	916.85	12'-0"	138'-0"	47'-0"	209'-3"	21'-0"	1'-0"	2 7/8"

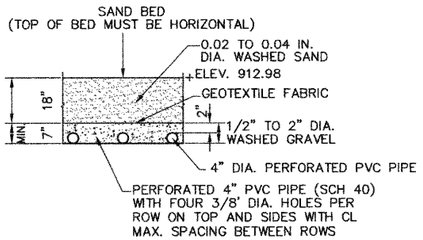

SAND FILTRATION BED SECTION

SCALE: 1/2" = 1'-0"

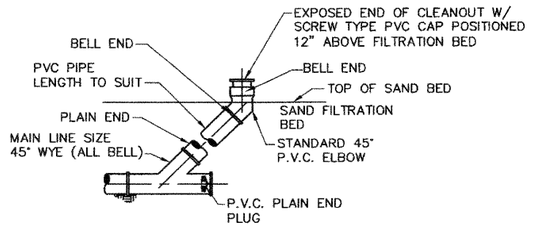

NOTE:
TO BE PLACED ON BEDDING MEETING SPECIFICATION FOR TYPE AND SIZE OF PIPE.

FILTRATION BED CLEAN-OUT

SCALE: 1/2" = 1'-0"

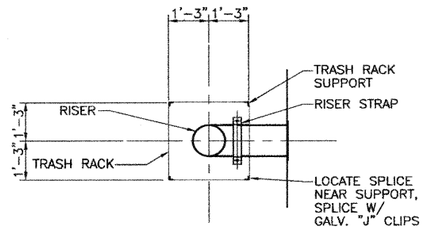

PLAN

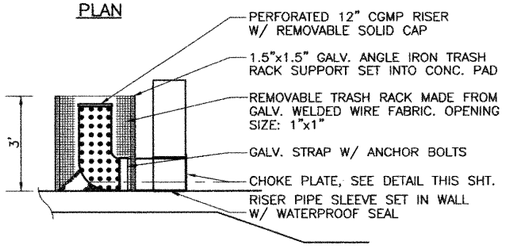

SECTION

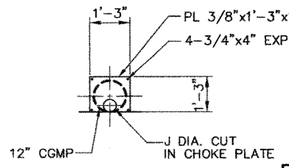

CHOKE PLATE DETAIL

RISER DETAIL

N.T.S.

STATE OF TEXAS
DAVID L. GARRETT
76626
REGISTERED
PROFESSIONAL ENGINEER
6/22/01
For Revision #1 Only

STATE OF TEXAS
REBECCA A. BILLS
82587
REGISTERED
PROFESSIONAL ENGINEER
Rebecca A. Bills
5-3-99

NOTES:

1. SEE WATER QUALITY PONDS STRUCTURAL DETAILS SHEETS 261a – 261d FOR POND DIMENSIONS AND REINFORCEMENT.
2. SEE STORM SEWER PROFILE SHEETS FOR FLOWLINES OF RCPs/RCBs AT SPLITTER BOX.

NO.	DATE	REVISION	APPROV.
4			
3			
2			
⚠1	6/01	CHANGE ORDER 10	

Turner Collie & Braden Inc.
ENGINEERS • PLANNERS • PROJECT MANAGERS

AUSTIN | Job No. 72-07401-022 | File

Texas Department of Transportation

© 1998 TxDOT

UNDERGROUND WATER QUALITY POND TYPICAL SECTIONS AND DETAILS

SCALE: AS NOTED

Designed	CH	FED. RD. DIV. NO.	STATE	FEDERAL AID PROJECT NO.				HIGHWAY NO.
Detailed	DLG	6	TEXAS	NH 99(556)				U.S.183
Checked	RP	STATE DIST. NO.	COUNTY	CONTROL NO.	SECTION NO.	JOB NO.	SHEET NO.	
Quantities	Q.	AUS	WILLIAMSON	0151	05	072	257	

0940103
2001
FILE: C:\07401022\CNGORDER\PLOT\roadway\boards\029257nw.dgn

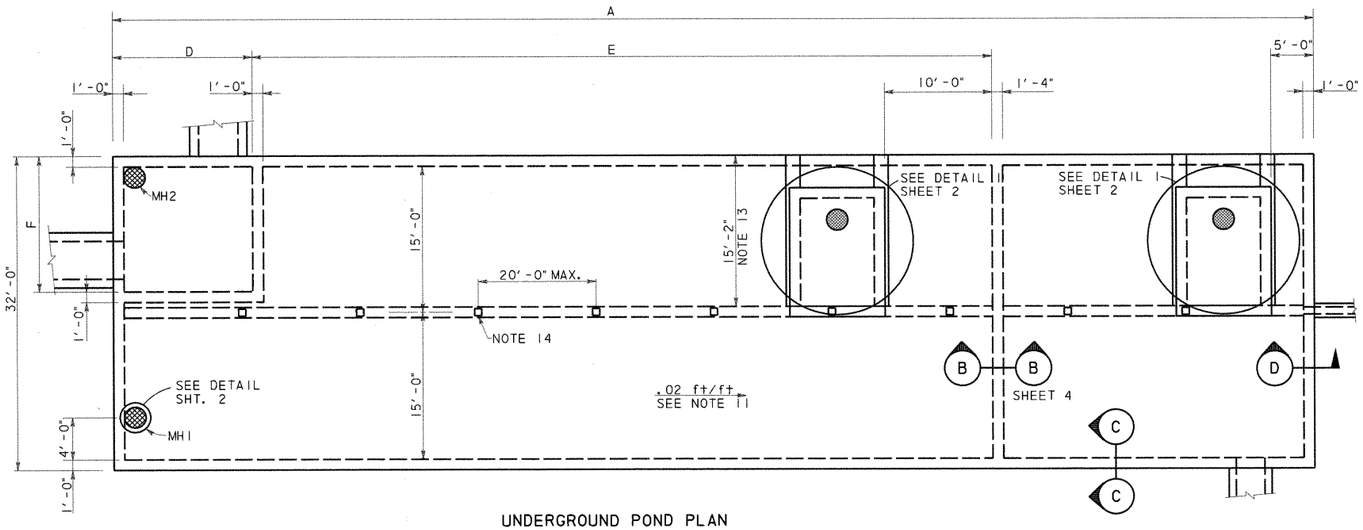

UNDERGROUND POND PLAN

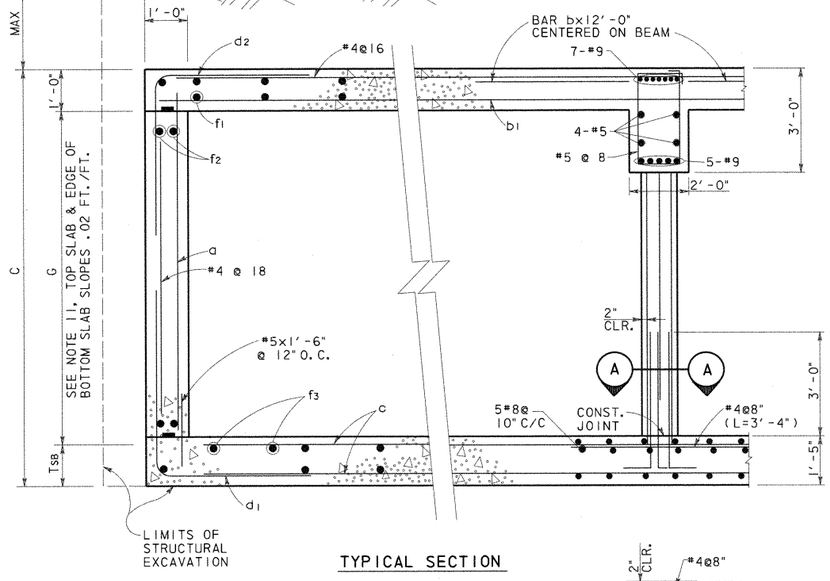

TYPICAL SECTION

SECTION C-C
N. T. S.

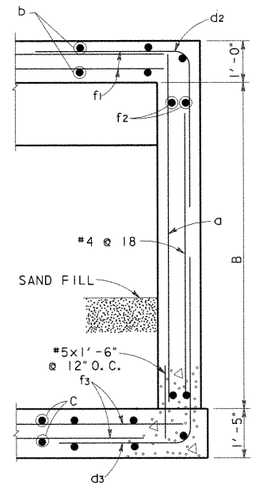

SECTION D-D
N. T. S.

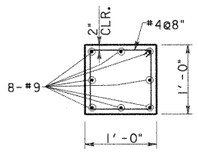

SECTION A-A
SCALE: 1"=1'-0"

UNDERGROUND POND REINFORCING TABLE																		
POND DESIGNATION	BARS a		BARS b		BARS b1		BARS c		BARS d1		BARS d2		BARS d3		BARS f1, f2, f3(#4)			
	SIZE	SPA.	SIZE	SPA.	SIZE	SPA.	SIZE	SPA.	SIZE	SPA.	SIZE	SPA.	SIZE	SPA.	f1 Spa.	f2 Spa.	f3 Spa.	
1A	#6	@12"	#8	@8"	#6	@8"	#8	@10"	#6	@6"	#6	@6"	#6	@6"	@6"	@12"	@7"	
1B	#6	@12"	#8	@8"	#6	@8"	#8	@10"	#6	@6"	#6	@6"	#6	@6"	@6"	@12"	@7"	
1C	#6	@12"	#8	@8"	#6	@8"	#8	@10"	#7	@6"	#6	@6"	#7	@6"	@6"	@12"	@7"	
2A	#6	@12"	#8	@8"	#6	@8"	#8	@10"	#6	@6"	#6	@6"	#6	@6"	@6"	@12"	@7"	
2B	#6	@12"	#8	@8"	#6	@8"	#8	@10"	#6	@6"	#6	@6"	#6	@6"	@6"	@12"	@7"	
2C	#7	@12"	#8	@8"	#6	@8"	#8	@10"	#7	@6"	#6	@6"	#8	@6"	@6"	@12"	@7"	
2D1	#7	@12"	#8	@8"	#6	@8"	#8	@10"	#7	@6"	#6	@6"	#8	@6"	@6"	@12"	@7"	
2D2	#7	@12"	#8	@8"	#6	@8"	#8	@10"	#7	@6"	#6	@6"	#8	@6"	@6"	@12"	@7"	

UNDERGROUND POND DIMENSION TABLE											
POND DESIGNATION	A	B	C	D	E	F	G			MAX FILL	AVERAGE FILL
1A	160'-4"	9'-2"	9'-3"	22'-0"	97'-0"	19'-0"	7'-0"			11'-0"	7'-6"
1B	128'-10"	9'-2"	9'-3"	15'-6"	77'-0"	11'-0"	7'-0"			8'-6"	5'-6"
1C	118'-10"	9'-8"	9'-9"	15'-6"	66'-0"	11'-0"	7'-6"			8'-3"	5'-6"
2A	147'-10"	9'-2"	9'-3"	15'-6"	92'-0"	11'-0"	7'-0"			9'-3"	6'-9"
2B	86'-10"	9'-2"	9'-3"	15'-6"	44'-0"	11'-0"	7'-0"			6'-9"	4'-9"
2C	133'-10"	10'-2"	10'-3"	15'-6"	77'-0"	11'-0"	8'-0"			4'-9"	3'-6"
2D1	181'-4"	10'-2"	10'-3"	22'-0"	110'-0"	13'-0"	8'-0"			11'-10"	7'-3"
2D2	211'-4"	10'-2"	10'-3"	13'-0"	139'-0"	22'-0"	8'-0"			9'-5"	7'-9"

GENERAL NOTES: UNDERGROUND PONDS

1. DESIGNED ACCORDING TO CURRENT AASHTO 1996 STANDARD SPECIFICATIONS.
2. DESIGNED FOR HS20 LOADING AND TO THE MAXIMUM FILL HEIGHT SHOWN.
3. ALL REINFORCING SHALL BE GRADE 60 KSI.
4. ALL CONCRETE SHALL BE CLASS "C".
5. REINFORCING BARS SHALL BE ADJUSTED TO PROVIDE A MINIMUM OF 1½" CLEAR COVER, UNLESS OTHERWISE NOTED.
6. ALL DIMENSIONS ARE IN FEET AND INCHES AND ALL MASS IS IN POUNDS UNLESS OTHERWISE NOTED.
7. SEE POND LAYOUT SHEETS FOR POND ORIENTATION AND LOCATION; PLUS THE ORIENTATION, SIZE AND LOCATION OF INCOMING AND OUTGOING DRAINAGE LINES.
8. WATERSTOPS SHALL BE HYDROPHILIC WATERSTOPS SUCH AS ADEKA MC-2010M.
9. PROVIDE 3" CLEARANCE WHERE CAST AGAINST SOIL.
10. PROVIDE CONSTRUCTION JOINTS IN WALLS AT A MAXIMUM SPACING OF 30 FOOT ON CENTER. MAXIMUM SLAB AREA TO BE PLACED WITHOUT CONSTRUCTION JOINTS IS 3000 SQUARE FEET. SLAB AND WALL CONSTRUCTION JOINTS SHALL ALIGN.
11. SEE POND LAYOUT FOR FLOWLINE. BOTTOM SLAB SHALL PROVIDE A .02 FT/FT SLOPE ALONG THE EDGE OF WALL. PERIMETER WALL HEIGHT (G) SHALL BE CONSTANT.
12. OFF SET RISER TO MISS ROOF SLAB BEAM.
13. AT UNDERGROUND PONDS 2C AND 2D2 THE ACCESS HATCH IS OPPOSITE HAND FROM WHAT IS SHOWN AND IS LOCATED FROM THE OPPOSITE WALL TO AVOID INTERFERENCE WITH THE DRAINAGE DITCH.
14. COLUMN SPACING IS 20.0 FT O.C. MAX. UNLESS NOTED OTHERWISE. THERE WILL BE NO COLUMNS WITHIN THE SPLITTER BOX, WHERE SPLITTER BOX EXTENDS TO THE ROOF BEAM OR BEYOND THE BEAM IS SUPPORTED BY THE SPLITTER BOX WALLS.
15. LAP TOP BARS @ MID SPAN AND BOTTOM BARS @ SUPPORTS.

ESTIMATED QUANTITIES*			
POND DESIGNATION	CONCRETE (CY)	REINFORCING BARS (LBS)	EXCAVATION (CY)
1A	623	144,925	
1B	505	115,855	
1C	476	109,213	
2A	572	131,682	
2B	356	82,752	
2C	536	123,427	
2D1	712	165,990	
2D2	823	191,615	

* QUANTITIES FOR CONTRACTOR'S ESTIMATE ONLY. ALL ITEMS ARE SUBSIDIERY TO THE POND ITEM.

STATE OF TEXAS
WILLY R. BURNS
44162
REGISTERED
ENGINEER
4/2/99

NO. DATE REVISION APPROVED

Turner Collie & Braden Inc.
Engineers • Planners • Project Managers

DATE SUTTON JOB NO. 62-14004-011 ADDENDUM

© 1998 Texas Department of Transportation

US 183

WATER QUALITY PONDS
STRUCTURAL DETAILS

SHEET 1 OF 11

Designed	WRB	FED. RD. DIV. NO.	STATE	FEDERAL AID PROJECT NO.				HIGHWAY NO.
Checked		6	TEXAS	NH99(556)				US 183
Drawn	MR	STATE DIST. NO.	COUNTY	CONTROL NO.	SECTION NO.	JOB NO.		SHEET NO.
Checked		14	WILLIAMSON	151	5	072		261a

UGPDTL1.DGN

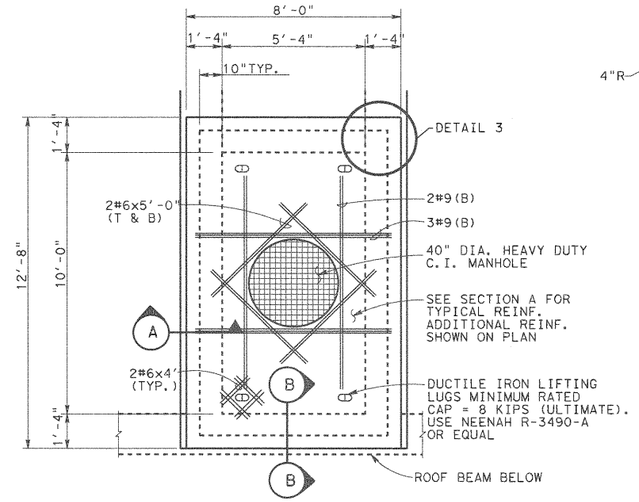

MAINTENANCE ACCESS HATCH

DETAIL 1

SCALE: 3/8" = 1'-0"

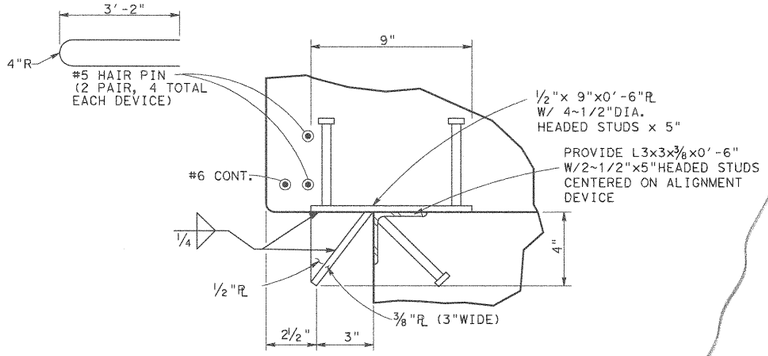

PROVIDE 8 DEVICES (GALV. AFTER FABRICATION) 2 EACH SIDE

DETAIL 2

ALIGNMENT DEVICE

SCALE: 3" = 1'-0"

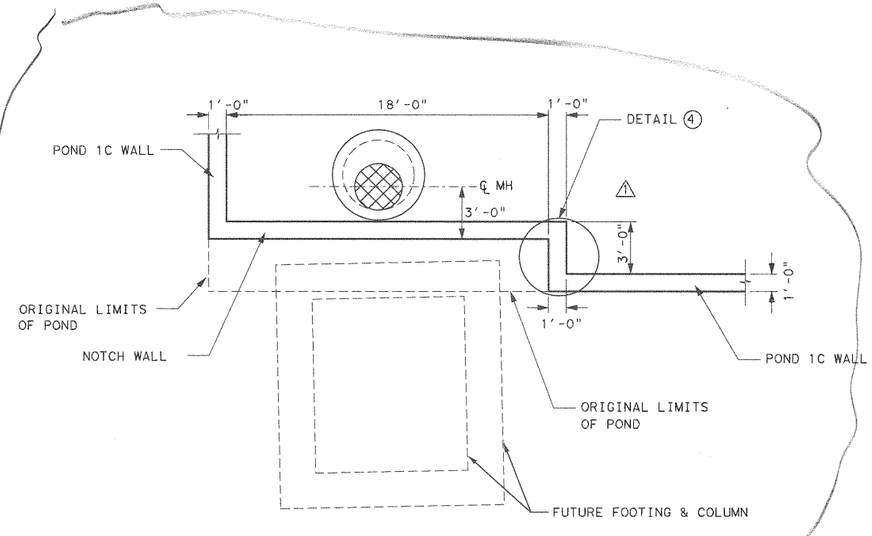

POND 1C MODIFICATION

SCALE: 3" = 1'-0"

SECTION A

SCALE: 1/2" = 1'-0"

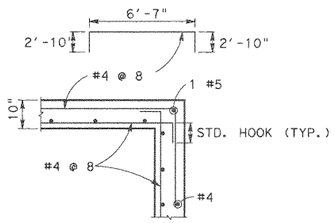

DETAIL 3

HORIZONTAL REINFORCEMENT

SCALE: 1/2" = 1'-0"

ACCESS HATCH		
POND	H1 (±)	ELEV. A
1A	8'-8"	929.20
1B	6'-7"	931.98
1C	6'-7"	931.62
2A	8'-4"	932.04
2B	5'-10"	932.20
2C	4'-10"	933.06
2D1	7'-4"	934.04
2D2	7'-11"	932.50

MANHOLE TABLE		
POND	H2	H3
1A	9'-0"	5'-0"
1B	9'-0"	4'-0"
1C	8'-0"	4'-0"
2A	9'-0"	4'-0"
2B	7'-0"	4'-0"
2C	3'-0"	5'-0"
2D1	10'-0"	4'-0"
2D2	7'-0"	5'-0"

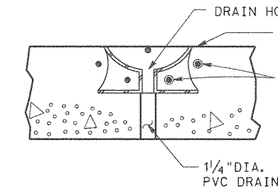

SECTION B

SCALE: 1"= 1'-0"

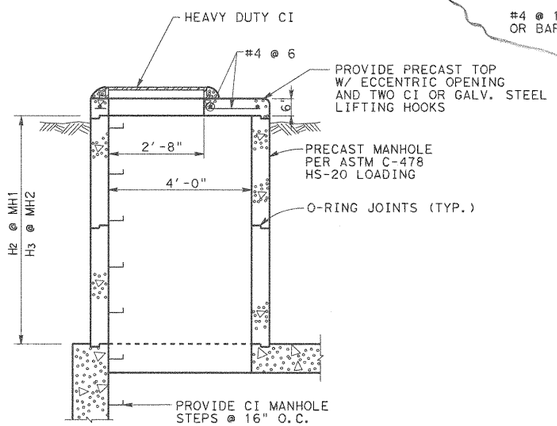

MANHOLE DETAIL

SCALE: 1/2" = 1'-0"

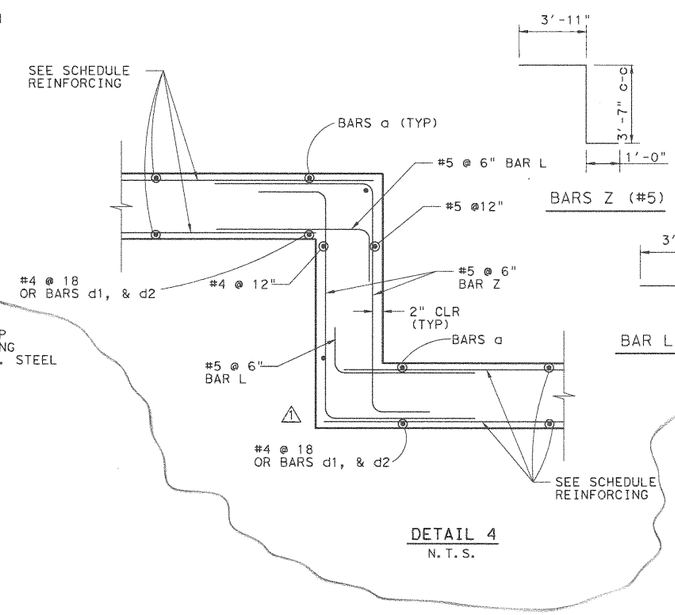

DETAIL 4

N.T.S.

STATE OF TEXAS
WALLY R. BURNS
44162
REGISTERED PROFESSIONAL ENGINEER
Wally R Burns
01/29/01

1	JAN. 26 01	ADD NOTCH	WRB
NO.	DATE	REVISION	APPROVED

Turner Collie & Braden Inc.
Engineers • Planners • Project Managers

TRANSPORTATION | Unit | Job No. 81-07401-024 | Approved

© 1998 Texas Department of Transportation

US 183
WATER QUALITY PONDS
STRUCTURAL DETAILS

SCALE: AS NOTED — SHEET 2 OF 11

Designed	Checked	Drawn	Checked	FED. RD. DIV. NO.	STATE	FEDERAL AID PROJECT NO.				HIGHWAY NO.
WRB		MR		6	TEXAS	NH99(556)				US 183
				STATE DIST. NO.	COUNTY	CONTROL NO.	SECTION NO.	JOB NO.		SHEET NO.
				14	WILLIAMSON	151	5	072		261b

UGPDT2.DGN

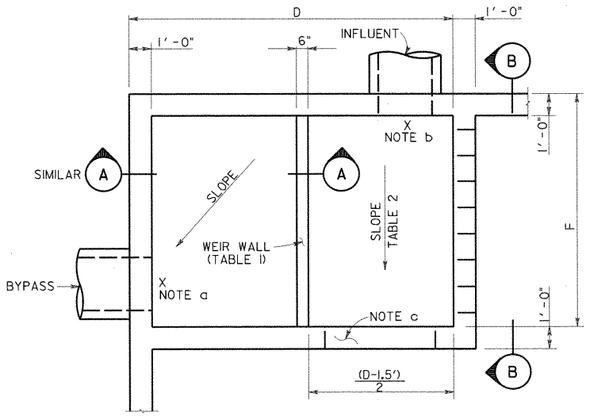

SEE TABLE SHEET I OF II
FOR DIMENSIONS D & F

SPLITTER BOX PLAN (POND 2D2)

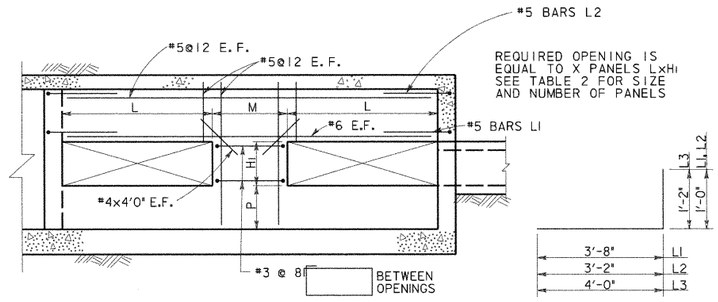

SECTION B

BARS L

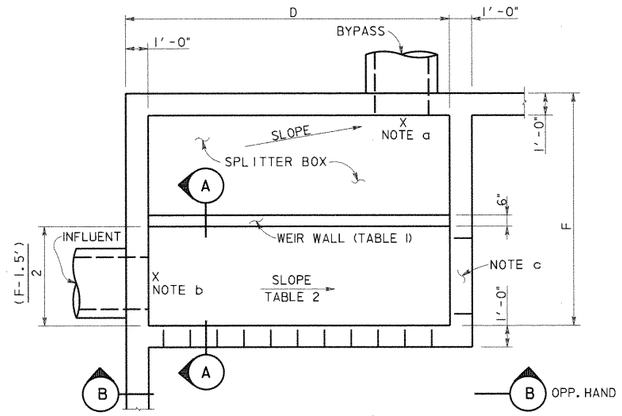

SEE TABLE SHEET I OF II
FOR DIMENSIONS D & F

SPLITTER BOX PLAN (TYPICAL)

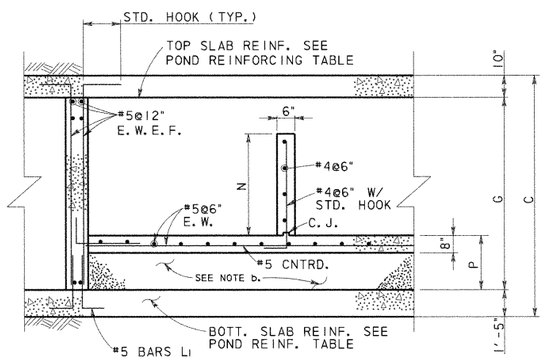

SECTION A

TABLE I BYPASS OUTFALL				
POND	BYPASS LINE ELEVATION	BYPASS WEIR		
		TOP OF WALL ELEV.	N*	P
1A	914.23	917.78	3'-6"	1'-6"
1B	918.44	921.00	2'-6"	2'-6"
1C	918.39	922.75	4'-3"	1'-9"
2A	917.38	920.92	3'-6"	1'-6"
2B	921.92	923.49	1'-6"	3'-6"
2C	923.82	925.90	2'-0"	4'-6"
2D1	920.53	923.63	3'-0"	2'-6"
2D2	916.71	921.85	5'-0"	1'-0"

*N IS MINIMUM DIMENSION, SPLITTER BOX FLOOR SLOPES, HOLD TOP OF WEIR WALL CONSTANT.

TABLE 2 INFLUENT LINE						
POND	INFLUENT ELEV.	SLOPE %	INFLUENT WALL			
			OPENINGS X	M	L	HI
1A	914.28	0.29	4	3'-0"	3'-0"	2'-6"
1B	918.50	0.48	3	2'-9"	3'-0"	1'-6"
1C	918.50	0.85	3	2'-9"	3'-0"	1'-6"
2A	917.42	0.33	3	2'-9"	3'-0"	1'-6"
2B	921.99	0.54	1	0	14'-8"	0'-9"
2C	923.90	0.62	3	2'-9"	3'-0"	1'-0"
2D1	920.63	0.53	3	6'-0"	3'-0"	2'-0"
2D2	916.85	0.78	4	3'-8"	2'-6"	2'-0"

NOTES:

a. SEE TABLE I THIS SHEET FOR OUT FLOW ELEVATION. SLOPE SLAB FROM OVERFLOW WEIR TO OUTFALL.

b. SEE TABLE 2 FOR INFLUENT ELEVATION. TOP OF SPLITTER BOX SLAB TO MATCH INFLOW ELEVATION. AT POND 2D1 THE ELEVATION SHOWN REPRESENTS A 6" DROP FROM THE INFLUENT FLOWLINE. CONTRACTOR MAY USE CEMENT STABILIZED SAND UNDER THE SLAB OR PLACE CONCRETE FOR THE FILL.

c. PROVIDE 3'x .75' OPENING AT BOTTOM OF SPLITTER BOX WALL AT END OF CHANNEL.

STATE OF TEXAS
WILLY R. BURNS
54103
REGISTERED
PROFESSIONAL ENGINEER
4/28/99

NO.	DATE	REVISION	APPROVED

Turner Collie & Braden Inc.
Engineers • Planners • Project Managers

SUTTON — Job No. 62-14004-011

© 1998 Texas Department of Transportation

US 183
WATER QUALITY PONDS
STRUCTURAL DETAILS

SCALE: AS NOTED — SHEET 3 OF 11

Designed	WRB	FED. RD. DIV. NO.	STATE	FEDERAL AID PROJECT NO.				HIGHWAY NO.
Checked		6	TEXAS	NH99(556)				US 183
Drawn	MR	STATE DIST. NO.	COUNTY	CONTROL NO.	SECTION NO.	JOB NO.		SHEET NO.
Checked		14	WILLIAMSON	151	5	072		261c

UGPDT3.DGN

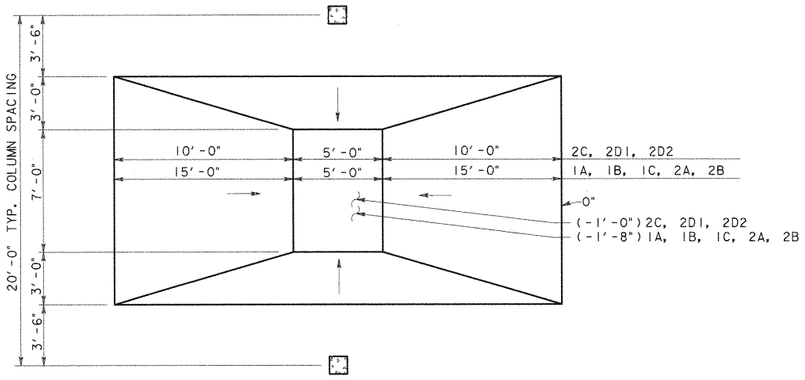

PLAN

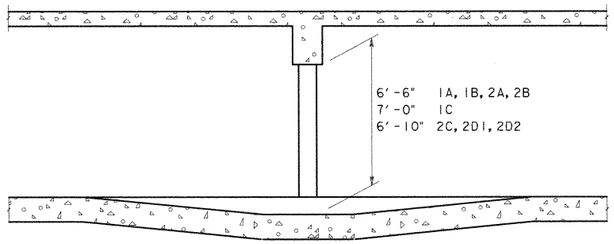

SECTION

REINFORCING LAP SPLICE & EMBEDMENT SCHEDULE						
BAR SIZE	MIN LAP LENGTH		MIN EMBEDMENT LENGTH			
	TOP BARS	OTHER BARS	TOP BARS		OTHER BARS	
			STR.	STD. HOOK	STR.	STD. HOOK
4	24"	20"	17"	9"	12"	7"
5	30"	24"	21"	10"	15"	8"
6	36"	28"	25"	10"	18"	8"
8	58"	41"	42"	15"	30"	12"

PROVIDE ONE CROSS OVER DETAIL FOR E ≤ 80'
PROVIDE TWO CROSS OVER DETAILS FOR E > 80'

CROSS OVER DETAIL
SCALE: 1/4" = 1'-0"

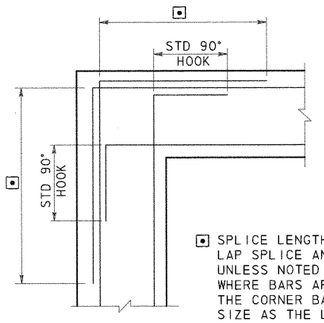

⊡ SPLICE LENGTH SEE REINFORCING LAP SPLICE AND EMBEDMENT TABLES. UNLESS NOTED OTHERWISE ON DWGS WHERE BARS ARE DIFFERENT SIZE THE CORNER BAR SHALL BE SAME SIZE AS THE LARGER BAR

CORNER REINFORCING
FOR WALLS OR GRADE BEAMS

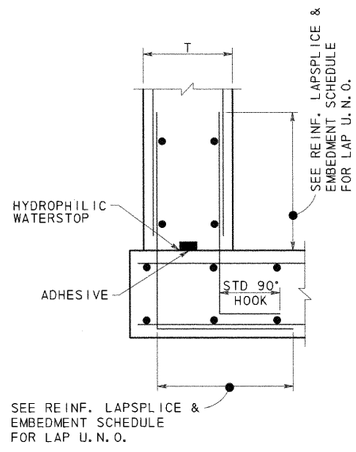

CONSTRUCTION JOINT
BASE OF WALLS

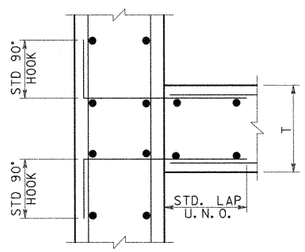

CONSTRUCTION JOINT
WALL INTERSECTIONS

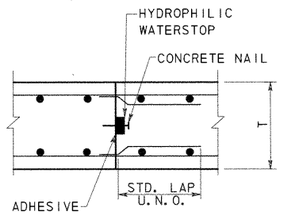

CONSTRUCTION JOINT
SLABS

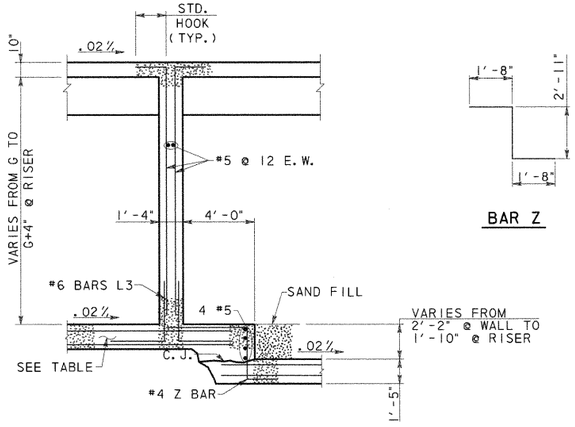

SECTION B

BAR Z

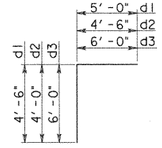

BARS D

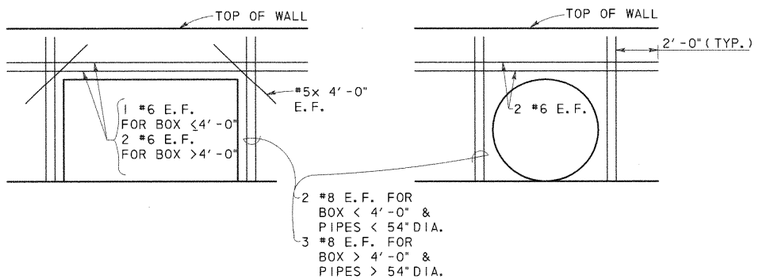

ADDITIONAL REINFORCING @ OPENINGS



NO.	DATE	REVISION	APPROVED

Turner Collie & Braden Inc.
Engineers • Planners • Project Managers

DATE: SUTTON | JOB NO. 62-14004-011 | APPROVED

© 1998 Texas Department of Transportation

US 183
WATER QUALITY PONDS
STRUCTURAL DETAILS

SCALE: AS NOTED | SHEET 4 OF 11

DESIGNED	CHECKED	DRAWN	CHECKED	FED. RD. DIV. NO.	STATE DIST. NO.	STATE	COUNTY	FEDERAL AID PROJECT NO. CONTROL NO.	SECTION NO.	JOB NO.	SHEET NO.	HIGHWAY NO.
WRB		MR		6	14	TEXAS	WILLIAMSON	NH99(556) 151	5	072	261d	US 183

UGPDT4.DGN

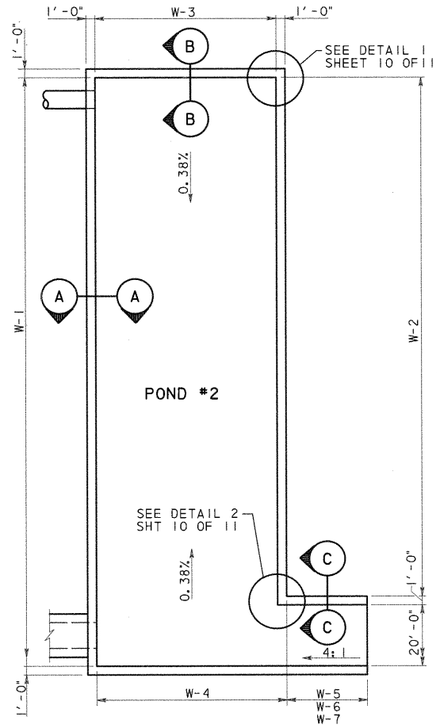

OPEN POND PLAN

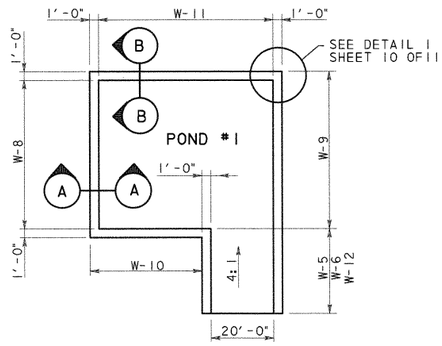

NOTE:

SEE POND LAYOUT SHEETS FOR REQ'D. RIPRAP, GABIONS, INCOMING & OUTGOING LINES ETC.

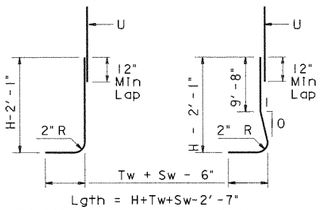

BARS A1

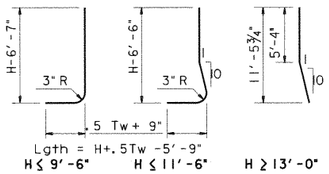

BARS A2

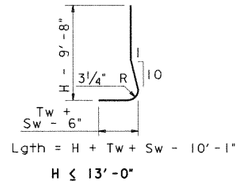

BARS A3

Wall Height "H" (ft)	PROPERTIES WALL DIMENSIONS(IN) Tw	Sw	Hw	Ft	Kw	Max Soil Press klp/ft²	REINFORCING STEEL FOR ONE 32(FT) PANEL A1 ~ 26 #5 @ 15" c-c Lgth	lb	A2 ~ 25 #6 @ 15" c-c Lgth	lb	A3 ~ 25 #7 @ 15" c-c Lgth	lb	B ~ 26 #5 @ 15" c-c Lgth	lb	C Size	No.	Spa	Lgth	lb	D (#5) @ 12" c-c No.	lb	Dowel F @ 12" c-c No.	lb	H (#5) @ 12" c-c No.	lb	T (#5) @ 12" c-c No.	lb	U ~ 26 #5 @ 15" c-c Lgth	lb
7'-0"	18	12	24	12	9	1.21	78	176					72	163	5	26	16	39	88	14	474	9	70	4	135	3	101	104	236
9'-6"	27	12	45	12	9	1.78	123	278	61	192			111	251	8	39	10	58	454	20	677	12	95	5	170	4	135	104	236
11'-6"	29	12	51	12	9	2.05	147	333	83	258	56	240	131	295	8	39	10	62	505	24	814	14	110	6	203	4	135	104	236
13'-0"	38	13	53	12	9	2.30	172	390	105	326	82	343	151	342	8	39	10	74	576	26	880	15	119	6	203	4	134	104	236

Wall	PROPERTIES WALL DIMENSIONS(IN) Tw	Sw	Hw	Ft	Kw	Max Soil Press klp/ft²	REINFORCING STEEL FOR PANELS W-5, W-6 & W-7 (AVG. L = 14.5') A1 ~ 26 #5 @ 15" c-c *Lgth	lb	A2 ~ 25 #6 @ 15" c-c *Lgth	lb	A3 ~ 25 #7 @ 15" c-c *Lgth	lb	B ~ 26 #5 @ 15" c-c Lgth	lb	C Size	No.	Spa	Lgth	lb	D (#5) @ 12" c-c No.	lb	Dowel F @ 12" c-c No.	lb	H (#5) @ 12" c-c No.	lb	T (#5) @ 12" c-c No.	lb	U ~ 26 #5 @ 15" c-c Lgth	lb
W-5	16	12	20	12	0	.88	56	60					52	56	5	12	15	32	64	10	154	9	71	4	61	3	46	104	104
W-6	20	12	31	12	9	1.53	100	104	40	55			92	96	6	12	15	47	141	16	246	12	95	5	77	3	61	104	104
W-7	27	12	39	12	9	1.76	146	154	82	114	56	48	130	120	8	18	10	58	116	24	369	15	119	6	92	4	61	104	104

*AVERAGE LENGTH, ADJUST FOR SLOPE

OPEN POND DIMENSION TABLE

WALL No.	LENGTH	HEIGHT
W-1	262'-0"	11'-0" TO 13'-0"
W-2	242'-0"	11'-0" TO 13'-0"
W-3	73'-0"	11'-0"
W-4	73'-0"	13'-0"
W-5	14'-6"	6'-6" TO 3'-0"
W-6	14'-6"	9'-6" TO 6'-6"
W-7	15'-0"	13'-0" TO 9'-6"
W-8	60'-0"	13'-0"
W-9	60'-0"	13'-0"
W-10	50'-0"	13'-0"
W-11	70'-0"	13'-0"
W-12	14'-0"	6'-6" TO 3'-0"

TOTALS

POND No.	CONCRETE (YD³)*	REINFORCING (LB)*	SQ.** FT.
POND #1	207	29830	3115
POND #2	489	70836	6696

*QUANTITIES FOR CONTRACTOR'S INFORMATION ONLY.

**EXPOSED S.F.

GENERAL NOTES:

1. DESIGNED ACCORDING TO CURRENT AASHTO 1996 STANDARD SPECIFICATIONS.
2. DESIGNED FOR EQUIVALENT SOIL PRESSURE OF 60 PCF.
3. ALL REINFORCING SHALL BE GRADE 60 KSI.
4. ALL CONCRETE SHALL BE CLASS "C".
5. REINFORCING BARS SHALL BE ADJUSTED TO PROVIDE A MINIMUM OF 1½" CLEAR COVER.
6. ALL DIMENSIONS ARE IN FEET AND INCHES AND ALL MASS IS IN POUNDS UNLESS OTHERWISE NOTED.
7. CONSTRUCTION JOINT SHALL BE AT 32 FT. MAX. OC. PROVIDE CONSTRUCTION AT 15' MAX FROM EACH CORNER. CORNER CLOSURES SHALL BE PLACED LAST.
8. PROVIDE AN EXPANSION JOINT AFTER MAXIMUM OF 3 PANELS.
9. SEE SHEET 11 OF 11 FOR EXPANSION JOINT, CONSTRUCTION JOINT DETAILS AND ADDITIONAL NOTES.
10. SEE SHEET 10 OF 11 FOR ADDITIONAL REINFORCEMENT AROUND OPENINGS.

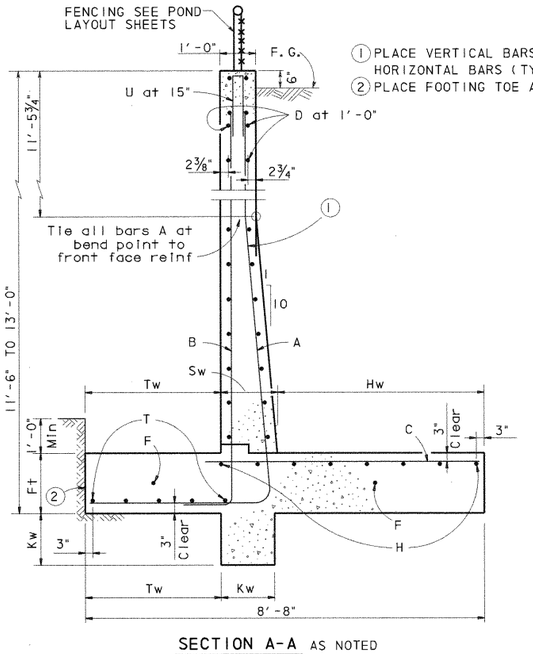

SECTION A-A AS NOTED

① PLACE VERTICAL BARS INSIDE OF HORIZONTAL BARS (TYP. BOTH FACES)
② PLACE FOOTING TOE AGAINST UNDISTURBED SOIL.

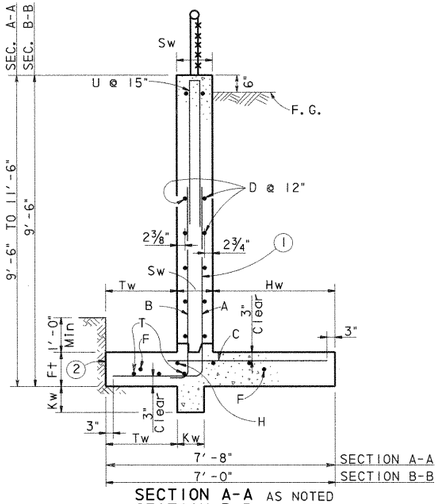

SECTION A-A AS NOTED
SECTION B-B AS NOTED
SCALE: ½" = 1'-0"

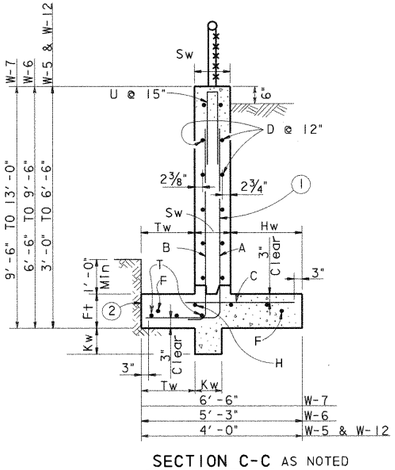

SECTION C-C AS NOTED
SCALE: ½" = 1'-0"

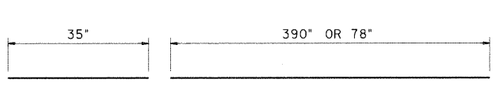

BARS F

BARS D, H, T

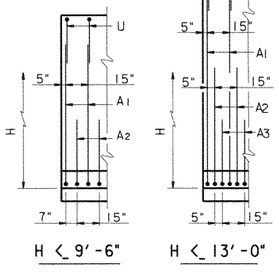

H ≤ 9'-6"

H ≤ 13'-0"

PARTIAL WALL ELEVATION
SHOWING VERTICAL REINFORCING PATTERN IN BACK FACE

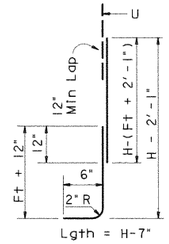

Lgth = H-7"

BARS B

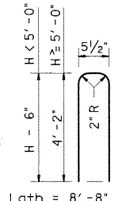

Lgth = 8'-8" for H ≥ 5'-0"

Lgth = 2H - 6½" for H < 5'-0"

BARS U

STATE OF TEXAS
WILLIAM R. BURRIS
44163
REGISTERED PROFESSIONAL ENGINEER
4/28/99

NO.	DATE	REVISION	APPROVED

Turner Collie & Braden Inc.
Engineers • Planners • Project Managers

DIST. SUTTON | JOB No. 62-14004-011 | Approved

© 1998 Texas Department of Transportation

US 183
620 MEDIAN
WATER QUALITY PONDS
STRUCTURAL DETAILS

SCALE: AS NOTED | SHEET 5 OF 11

Designed	WRB	FED. RD. DIV. NO. 6	STATE TEXAS	FEDERAL AID PROJECT NO. NH99(556)	HIGHWAY NO. US 183
Checked					
Drawn	MR	STATE DIST. NO. 14	COUNTY WILLIAMSON	CONTROL NO. 151	SECTION NO. 5	JOB NO. 072	SHEET NO. 261e
Checked					

UGPDT5.DGN

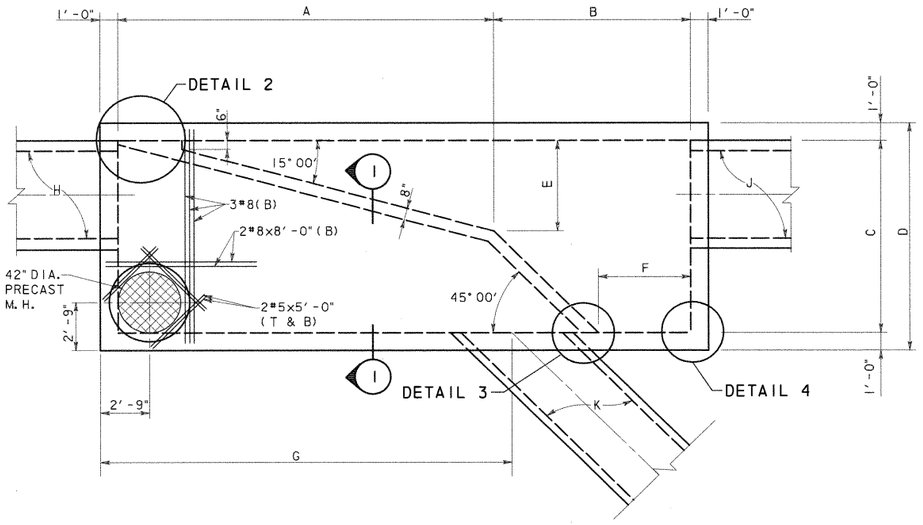

SPLITTER BOX DIMENSION TABLE

BOX LOCATION	A	B	C	D	E	F	G	H	J	K
POND SPRINGS	21'-0"	11'-0"	11'-0"	13'-0"	5'-2"	5'-2"	22'-0"	6x5 RCB	6x5 RCB	4x4 RCB
620 LEFT SIDE	13'-9"	8'-9"	8'-0"	10'-0"	3'-2"	4'-1"	13'-7"	*48" RCP	4x4 RCB	48" RCP

*48" RCP @ 15° SKEW
SEE DRAINAGE DETAIL SHEET.

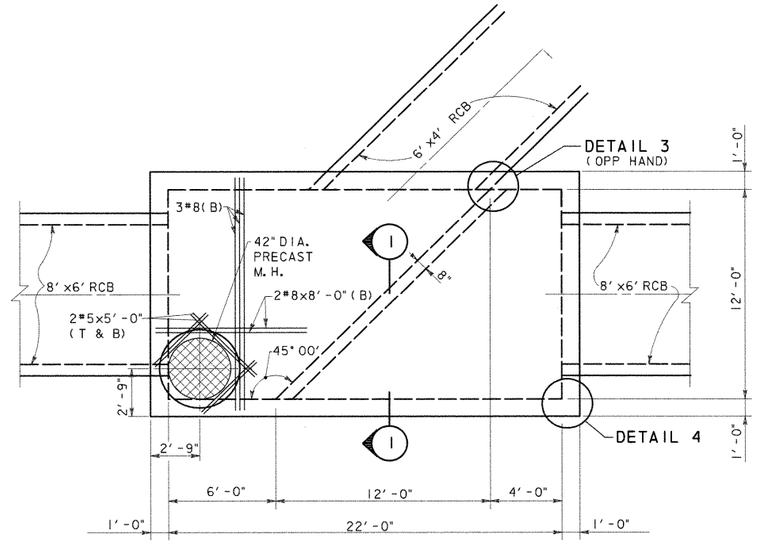

620 RIGHT SIDE
PLAN VIEW
SCALE: 1/4" = 1'-0"

ESTIMATED QUANTITIES			
BOX	CONCRETE (YD^3) *	REINFORCING (LBS) *	STRUCTURAL EXCAVATION (YD)
POND SPRINGS	56.8	7,964	
620 LEFT	32.5	4,096	
620 RIGHT	48.8	5,877	

* QUANTITIES FOR CONTRACTOR'S ESTIMATE ONLY. ALL ITEMS ARE SUBSIDIARY TO THE SPLITTER BOX.

PLAN VIEW
SCALE: 1/4" = 1'-0"

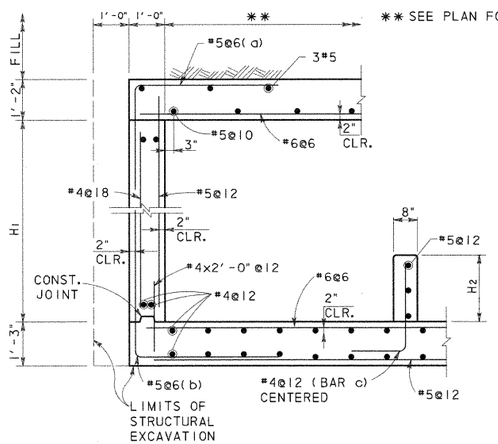

SECTION 1
SCALE: 1/2" = 1'-0"

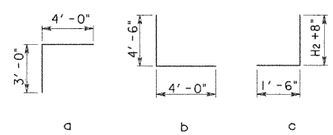

BOX LOCATION	H1	H2
POND SPRINGS	5'-6"	3'-0 1/2"
620 LEFT SIDE	4'-6"	2'-6"
620 RIGHT SIDE	6'-8"	1'-3"

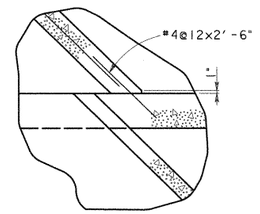

DETAIL 3
SCALE: 1/2" = 1'-0"

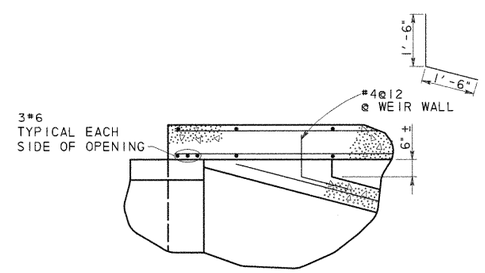

DETAIL 2
SCALE: 1/2" = 1'-0"

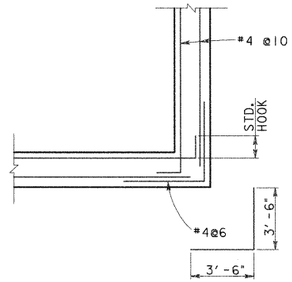

DETAIL 4
SCALE: 1/2" = 1'-0"

GENERAL NOTES:

1. DESIGNED ACCORDING TO CURRENT AASHTO 1996 STANDARD SPECIFICATIONS.
2. DESIGNED FOR HS20 LOADING AND TO THE MAXIMUM FILL HEIGHT SHOWN.
3. ALL REINFORCING SHALL BE GRADE 60 KSI.
4. ALL CONCRETE SHALL BE CLASS "C".
5. ALL DIMENSIONS ARE IN FEET AND INCHES AND ALL MASS IS IN POUNDS UNLESS OTHERWISE NOTED.



NO.	DATE	REVISION	APPROVED

Turner Collie & Braden Inc.
Engineers • Planners • Project Managers

DATE: SUTTON | JOB NO. 62-14004-011 | APPROVED

© 1998 Texas Department of Transportation

US 183
WATER QUALITY PONDS
STRUCTURAL DETAILS

SCALE: AS NOTED | SHEET 6 OF 11

Designed	WRB	FED. RD. DIV. NO.	STATE	FEDERAL AID PROJECT NO.				HIGHWAY NO.
Checked		6	TEXAS	NH99(556)				US 183
Drawn	MR	STATE DIST. NO.	COUNTY	CONTROL NO.	SECTION NO.	JOB NO.		SHEET NO.
Checked		14	WILLIAMSON	151	5	072		261f

UGPDT6.DGN

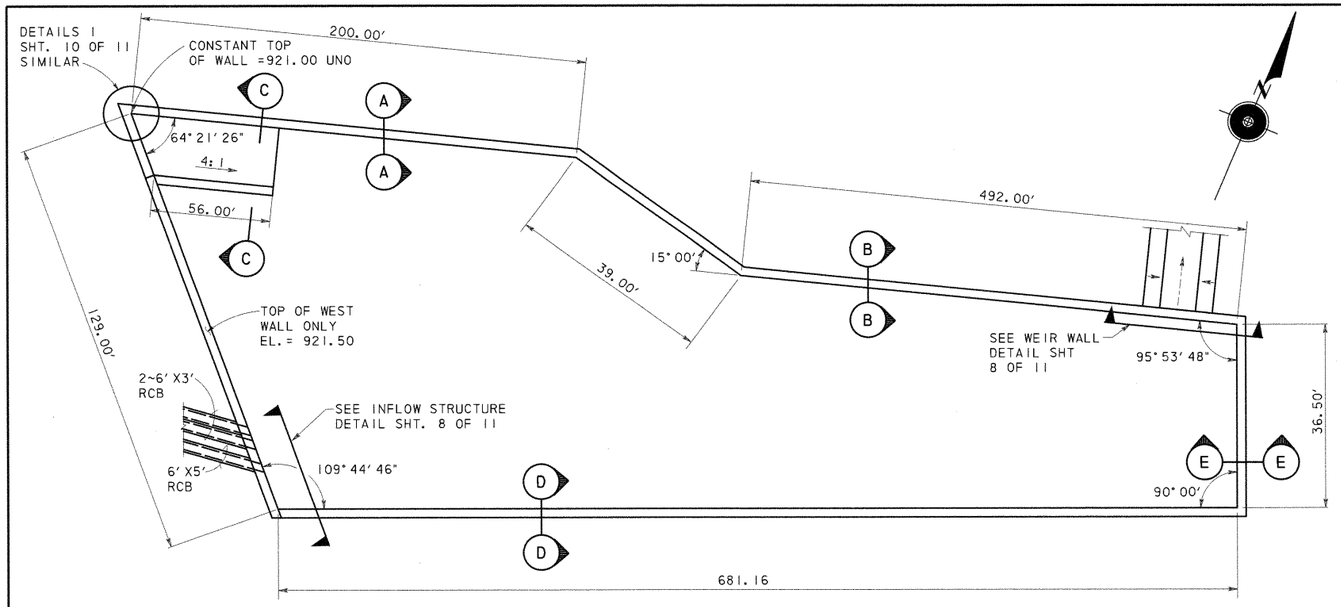

SYSTEM 3 DETENTION POND PLAN

ESTIMATED QUANTITIES (SECTION A)		
CONCRETE (YD^3) *	REINFORCING (LBS) *	** SQ. FT.
2,626	771,900	24,431

* QUANTITIES FOR CONTRACTOR'S ESTIMATE ONLY.

** EXPOSED FACE

*** WALL REINFORCING FOR 32' PANEL (SECT. A)									
A1 ~ 26 #5 @ 15" c-c		A2 ~ 25 #6 @ 15" c-c		A3 ~ 25 #7 @ 15" c-c		A4 ~ 26 #9 @ 15" c-c		A5 ~ 25 #9 @ 15" c-c	
Lgth	lb	Lgth	lb	Lgth	lb	Lgth	lb	Lgth	lb
129	292	145	455	218	928	188	1384	118	837

*** ONE SIDE SHOWN, BARS A BOTH SIDES

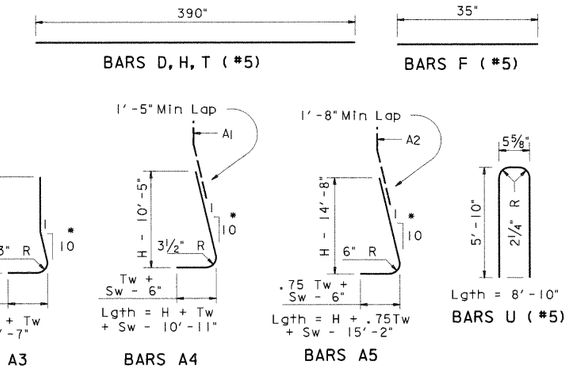

* A BARS ARE STRAIGHT IN FRONT FACE.

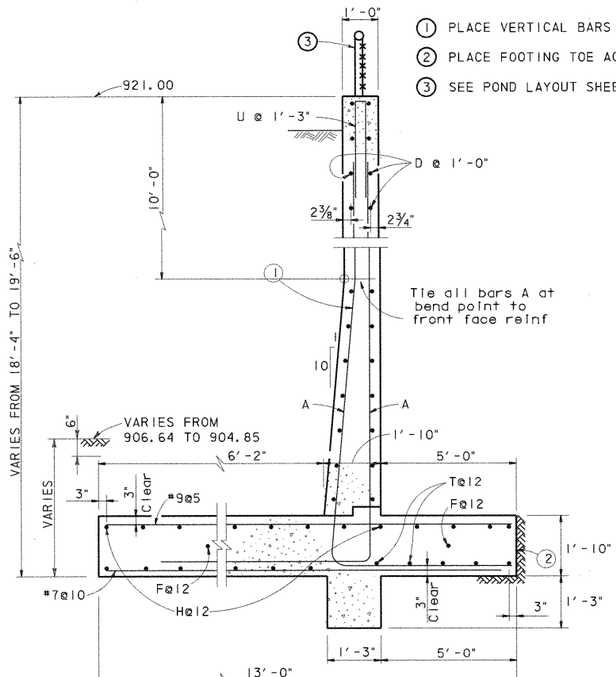

SECTION A-A
SCALE: ½" = 1'-0"

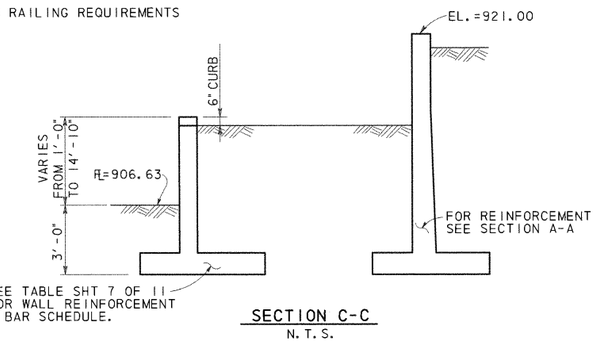

SECTION C-C
N.T.S.

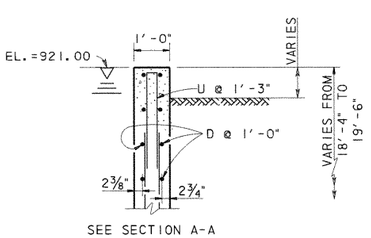

SEE SECTION A-A FOR REST OF DETAIL

SECTION D-D
SCALE: ½" = 1'-0"

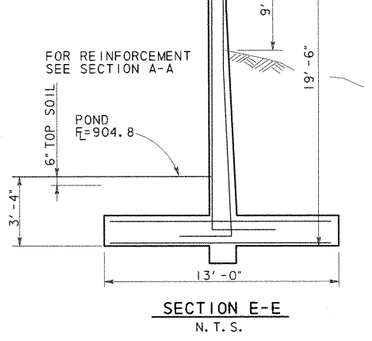

SECTION E-E
N.T.S.

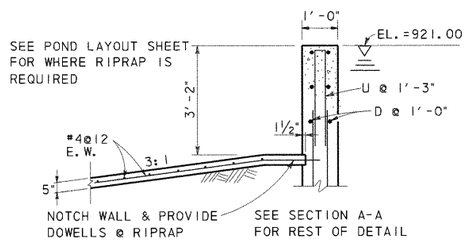

SECTION B-B
SCALE: ½" = 1'-0"

ELEVATION

GENERAL NOTES:

1. DESIGNED ACCORDING TO CURRENT AASHTO 1996 STANDARD SPECIFICATIONS.
2. DESIGNED FOR HS20 LOADING AND EQUIVALENT SOIL PRESSURE OF 60 PCF.
3. ALL REINFORCING SHALL BE GRADE 60 KSI.
4. ALL CONCRETE SHALL BE CLASS "A".
5. REINFORCING BARS SHALL BE ADJUSTED TO PROVIDE A MINIMUM OF 1½" CLEAR COVER.
6. ALL DIMENSIONS ARE IN FEET AND INCHES AND ALL MASS IS IN POUNDS UNLESS OTHERWISE NOTED.
7. CONSTRUCTION JOINT SHALL BE AT 32 FT. MAX. OC. PROVIDE CONSTRUCTION AT 15' MAX FROM EACH CORNER. CORNER CLOSURES SHALL BE PLACED LAST.
8. PROVIDE AN EXPANSION JOINT AFTER MAXIMUM OF 3 PANELS.
9. SEE SHEET 11 OF 11 FOR CONSTRUCTION AND EXPANSION JOINT DETAILS.

STATE OF TEXAS
WALLY R. BURNS
44162
REGISTERED PROFESSIONAL ENGINEER
4/28/99

NO.	DATE	REVISION	APPROVED

Turner Collie & Braden Inc.
Engineers • Planners • Project Managers

SUTTON | Job No. 62-14004-011 | Approved

© 1998 Texas Department of Transportation

US 183
WATER QUALITY PONDS
STRUCTURAL DETAILS

SCALE: AS NOTED | SHEET 7 OF 11

Designed	Checked	Drawn	Checked	FED. RD. DIV. NO.	STATE DIST. NO.	STATE	COUNTY	CONTROL NO.	SECTION NO.	JOB NO.	HIGHWAY NO. / SHEET NO.
WRB		MR		6	14	TEXAS	WILLIAMSON	151	5	072	US 183 / 261g

FEDERAL AID PROJECT NO. NH99(556)

UGPDT7.DGN

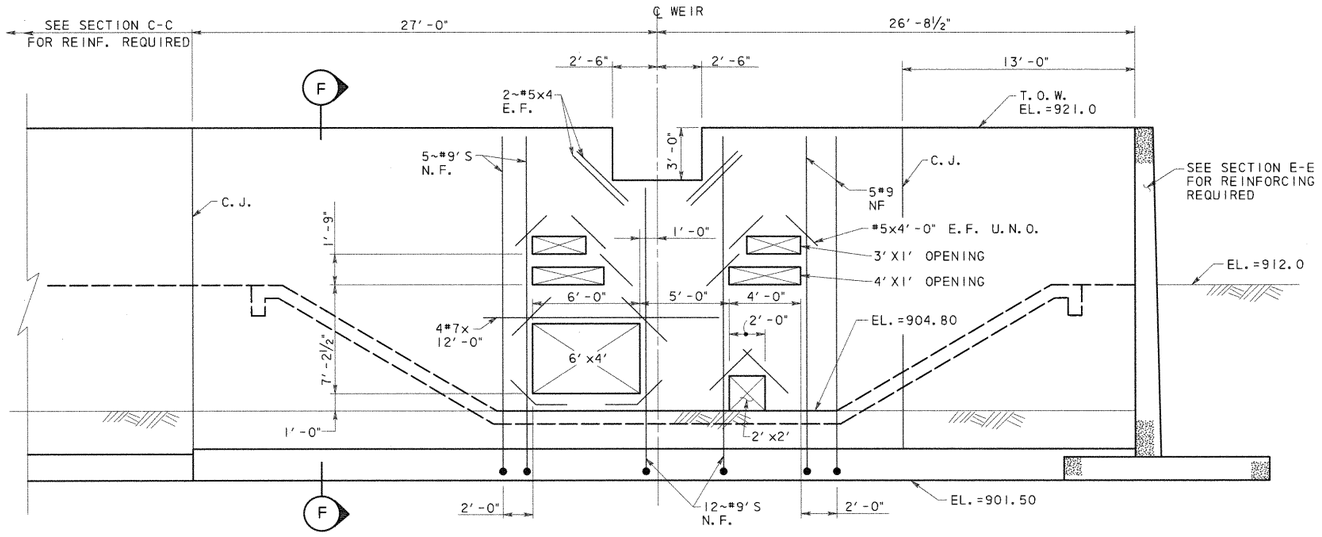

ADDITIONAL REINFORCING SHOWN, SEE SECTION F FOR TYPICAL REINF.

WEIR WALL DETAIL

SCALE: ¼" = 1'-0"

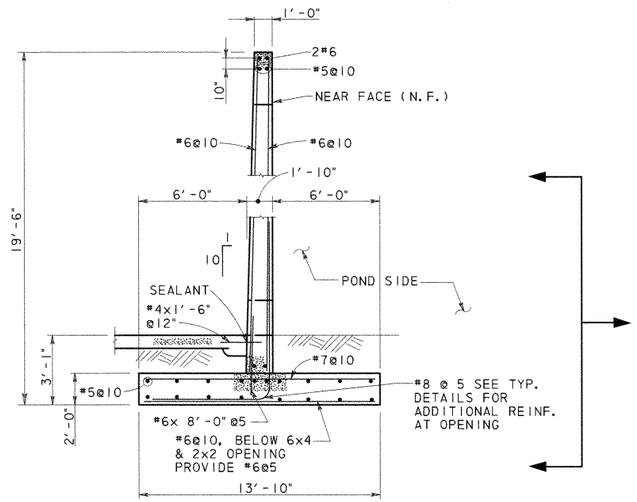

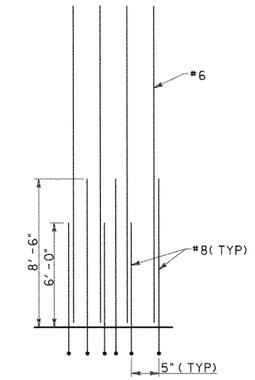

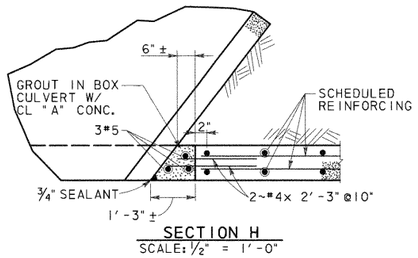

SECTION H

SCALE: ½" = 1'-0"

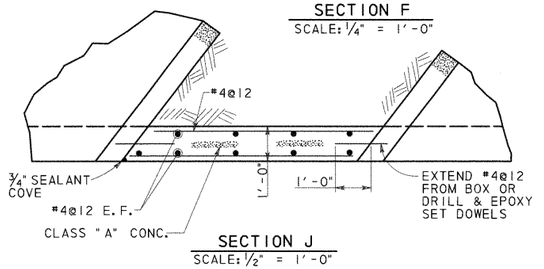

SECTION J

SCALE: ½" = 1'-0"

SECTION F

SCALE: ¼" = 1'-0"

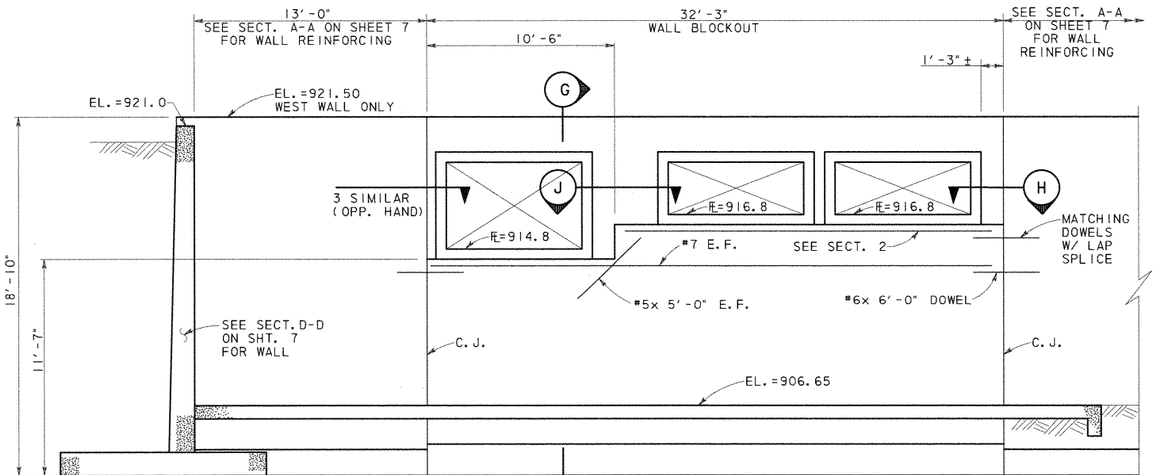

INFLOW STRUCTURE DETAIL

SCALE: ¼" = 1'-0"

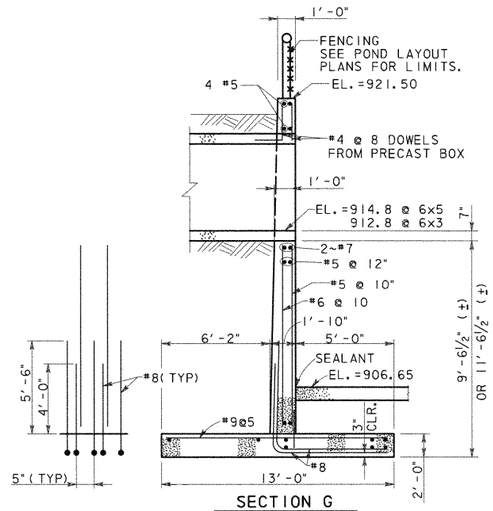

SECTION G

SCALE: ¼" = 1'-0"

STATE OF TEXAS · WALLY R. BURNS · 64262 · REGISTERED PROFESSIONAL ENGINEER

Wally R. Burns 4/28/99

NO.	DATE	REVISION	APPROVED

Turner Collie & Braden Inc.

Engineers • Planners • Project Managers

SUTTON | Job No. 62-14004-011 | Approved

© 1998 Texas Department of Transportation

US 183

WATER QUALITY PONDS STRUCTURAL DETAILS

SCALE: AS NOTED — SHEET 8 OF 11

Designed WRB	Fed. Rd. Div. No. 6	State TEXAS	Federal Aid Project No. NH99(556)	Highway No. US 183
Checked				
Drawn MR	State Dist. No. 14	County WILLIAMSON	Control No. 151	Section No. 5
Checked				Job No. 072

Sheet No. 261h

UGPDT8.DGN

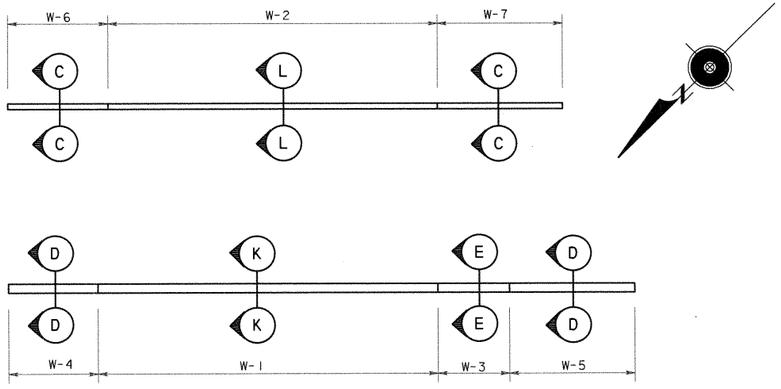

OPEN POND PLAN

Wall Height "H" (ft)	WALL	PROPERTIES: WALL DIMENSIONS (IN) Fw	Tw	Sw	Hw	Ft	Kw	REINFORCING STEEL FOR ONE 32(FT) PANEL ③: A1 ~ 26 #5 @ 15"c-c (④) Lgth	lb	A2 ~ 25 #6 @ 15"c-c (④) Lgth	lb	A3 ~ 25 #7 @ 15"c-c (④⑥) Lgth	lb	A4 ~ 26 #8 @ 15"c-c Lgth	lb	B ~ 26 #5 @ 15"c-c Lgth	lb	C Size	No.	Spa	Lgth	lb	D (#5) @ 12"c-c (⑤) No.	lb	Dowel F (#5) @ 12"c-c No.	lb	H (#5) @ 12"c-c No.	lb	T (#5) @ 12"c-c No.	lb	U ~ 26 #5 @ 15"c-c Lgth	lb
5'-0"	W4, PANEL A W5, PANEL A	60	24	12	24	12	9	63	141									5	26	15	54	122	14	474	9	71	6	202	6	202	104	236
	W6, PANEL A W7, PANEL A	58	20	12	26	12	9	59	133							65	209	5	26	15	42	95					4	134	3	101		
7'-6"	W5, PANEL B	80	34	12	34	12	9	114	258	66	208							8	39	10	74	642	16	542	12	95	8	272	8	272	104	236
9'-0"	W4, PANEL B	94	40	12	40	12	9	139	314	89	277	68	292					8	39	10	88	766	20	677	14	110	9	305	9	305	104	236
	W6, PANEL B W7, PANEL B	88	30	12	46	12	9	129	291	84	261	58	249			124	402	8	39	10	60	522					6	203	4	135		
11'-0"	W5, PANEL C	100	44	13	43	13	9	164	369	110	346	93	394					8	39	10	94	816	24	814	16	119	9	305	9	305	104	236
12'-6"	W6, PANEL C W7, PANEL C	106	38	15	53	15	12	117	265	127	398	109	460	80	458	163	530	9	39	10	72	796	26	880	17	134	7	238	5	170	104	236
14'-0"	W3 W4, PANEL C	122	55	16	51	18	12	117	265	156	487	146	844	117	676			9	39	10	116	1282	30	1016	18	141	12	407	12	407	104	236
15'-6"	W1	132	60	18	54	18	12	117	265	198	615	174	739	144	1063			11	39	10	126	2171	32	1085	20	159	12	407	12	407	104	236
	W2	126	40	18	68	18	12	117	265	168	522	153	650	123	908	202	658	11	39	10	87	1499					8	272	5	170		

ESTIMATE QUANTITIES			
WALL	CONCRETE (YD^3) *	REINFORCING (LB) *	SQ. FT. **
W1, W3, W4, W5	170	41,210	1,275
W2, W6, W7	155	26,497	1,226
TOTAL	325	67,707	2,501

* QUANTITIES FOR CONTRACTOR'S INFORMATION ONLY.

** EXPOSED SURFACE

POND DIMENSION TABLE			
WALL No.	LENGTH	HEIGHT	DESIGN HEIGHT
W-1	95'-0"	15'-6'	15'-6"
W-2	92'-0"	15'-6"	15'-6"
W-3	16'-0"	14'-0"	14'-0"
W-4	25'-0"		
PANEL A	8'-4"	2'-6" TO 6'-10"	5'-0"
PANEL B	8'-4"	6'-10" TO 11'-2"	9'-0"
PANEL C	8'-4"	11'-2" TO 15'-6"	14'-0"
W-5	35'-0"		
PANEL A	11'-8"	2'-6" TO 5'-10"	5'-0"
PANEL B	11'-8"	5'-10" TO 9'-2"	7'-6"
PANEL C	11'-8"	9'-2" TO 12'-6"	11'-0"
W-6	28'-0"		
PANEL A	9'-4"	2'-6" TO 6'-4"	5'-0"
PANEL B	9'-4"	6'-4" TO 10'-2"	9'-0"
PANEL C	9'-4"	10'-2" TO 14'-0"	12'-6"
W-7	35'-0'		
PANEL A	11'-8"	2'-6" TO 6'-4"	5'-0"
PANEL B	11'-8"	6'-4" TO 10'-2"	9'-0"
PANEL C	11'-8"	10'-2" TO 14'-0"	12'-6"

① PLACE VERTICAL BARS INSIDE OF HORIZONTAL BARS (TYP. BOTH FACES)
② PLACE FOOTING TOE AGAINST UNDISTURBED SOIL.
③ ADJUST NUMBER AND LENGH OF BARS A,B,C 7 U FOR WALLS W4, W5, W6 & W7. ADJUST BARS D, H & T FOR LENGTH OF PANEL AND STEEP GRADE OF WALL.
④ DOUBLE A BARS FOR WALLS W1, W3, W4, W5. FOR WALLS > 12'-6" ADJUST BEND OF A BARS ON STRAIGHT SIDE.
⑤ AVERAGE NUMBER OF BARS D SHOWN.
⑥ FOR 15'-6" WALLS USE #9 BARS FOR 15'-6"

GENERAL NOTES:

1. DESIGNED ACCORDING TO CURRENT AASHTO 1996 STANDARD SPECIFICATIONS.
2. DESIGNED FOR EQUIVALENT SOIL PRESSURE OF 60 PCF.
3. ALL REINFORCING SHALL BE GRADE 60 KSI.
4. ALL CONCRETE SHALL BE CLASS "C".
5. REINFORCING BARS SHALL BE ADJUSTED TO PROVIDE A MINIMUM OF 1½" CLEAR COVER.
6. ALL DIMENSIONS ARE IN FEET AND INCHES AND ALL MASS IS IN POUNDS UNLESS OTHERWISE NOTED.
7. CONSTRUCTION JOINT SHALL BE AT 32 FT. MAX. OC. PROVIDE CONSTRUCTION AT 15' MAX FROM EACH CORNER. CORNER CLOSURES SHALL BE PLACED LAST.
8. PROVIDE AN EXPANSION JOINT AFTER MAXIMUM OF 3 PANELS.
9. SEE SHEET 11 OF 11 FOR EXPANSION JOINT, CONSTRUCTION JOINT DETAILS AND ADDITIONAL NOTES.
10. SEE SHEET 10 OF 11 FOR ADDITIONAL REINFORCEMENT AROUND OPENINGS.
11. SEE SHEET 10 OF 11 FOR WALL ELEVATIONS AND BAR DETAILS.

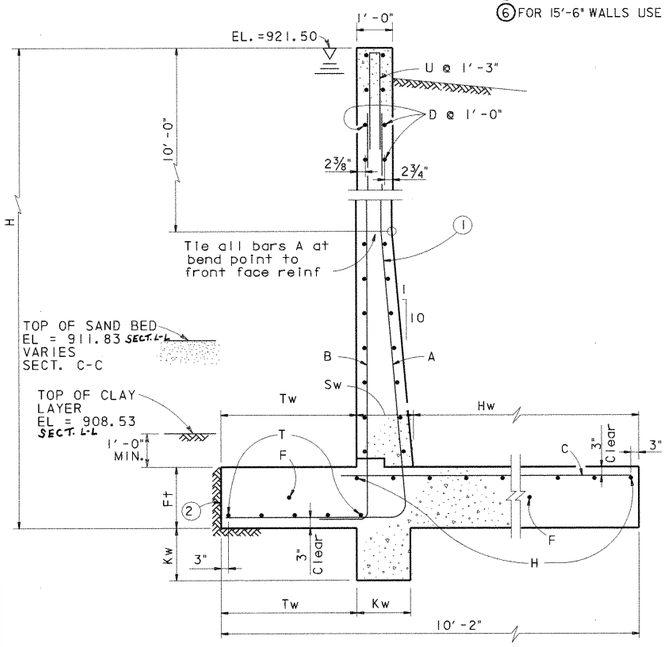

SECTION L-L & SECTION C-C
WALLS W2, W6, & W7
SCALE: ½" = 1'-0"

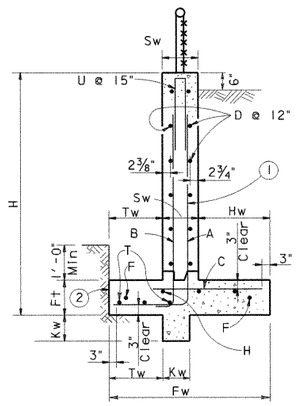

SECTION C-C
WALLS W6, & W7
SCALE: ½" = 1'-0"

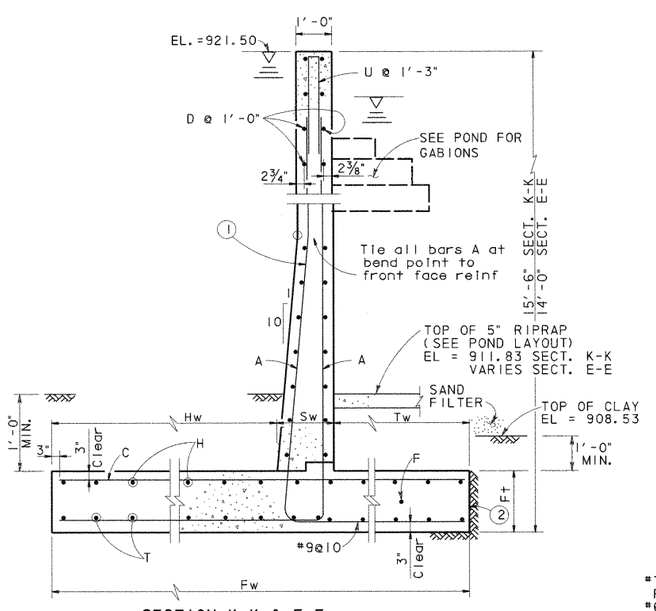

SECTION K-K & E-E
WALLS W1, W3, W4 & W5
SCALE: ½" = 1'-0"

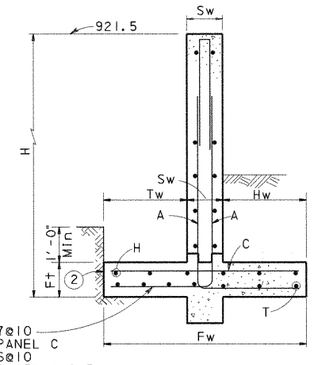

SECTION D-D
WALLS W1, W3, W4 & W5
SCALE: ½" = 1'-0"

STATE OF TEXAS
WALLY R. BURNS
44162
REGISTERED
PROFESSIONAL ENGINEER
4/28/99

NO.	DATE	REVISION	APPROVED

Turner Collie & Braden Inc.
Engineers • Planners • Project Managers

DIST: SUTTON — Job No. 62-14004-011 — Approved

© 1998 Texas Department of Transportation

US 183
POND SPRINGS
WATER QUALITY PONDS
STRUCTURAL DETAILS

SCALE: AS NOTED — SHEET 9 OF 11

Designed	WRB	FED. RD. DIV. NO.	STATE	FEDERAL AID PROJECT NO.				HIGHWAY NO.
Checked		6	TEXAS	NH99(556)				US 183
Drawn	MR	STATE DIST. NO.	COUNTY	CONTROL NO.	SECTION NO.	JOB NO.	SHEET NO.	
Checked		14	WILLIAMSON	151	5	072	2611	

UGPDT9.DGN

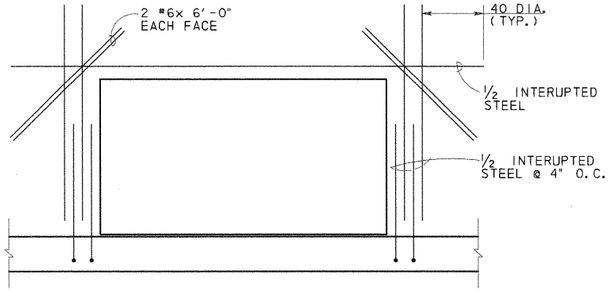

CULVERT OPENINGS

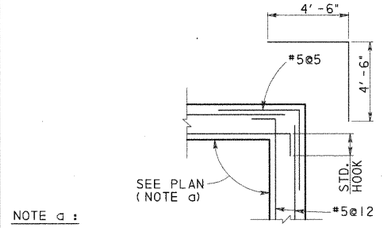

NOTE a :

SEE 620 MEDIAN POND (SHT. 5 OF 11), SYSTEM 3 POND (SHT. 7 OF 11)

DETAIL 1
SCALE: 1/2" = 1'-0"

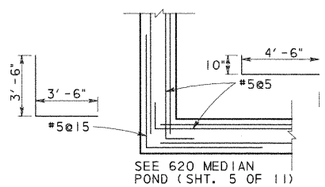

DETAIL 2
SCALE: 1/2" = 1'-0"

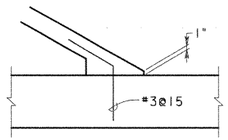

DETAIL 3
SCALE: 3/4" = 1'-0"

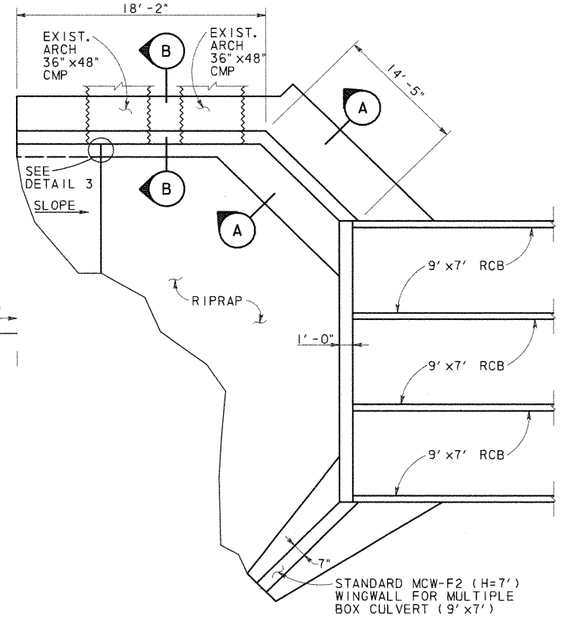

CULVERT @ POND SPRINGS PLAN
N. T. S.

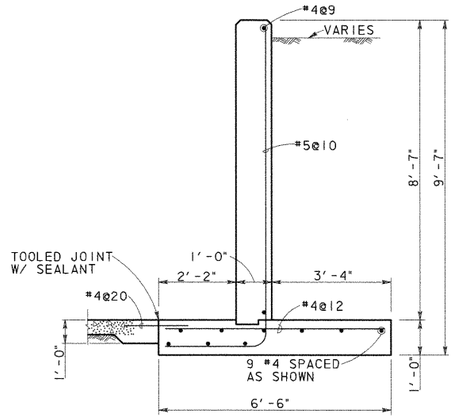

SECTION A-A
SCALE: 1/2" = 1'-0"

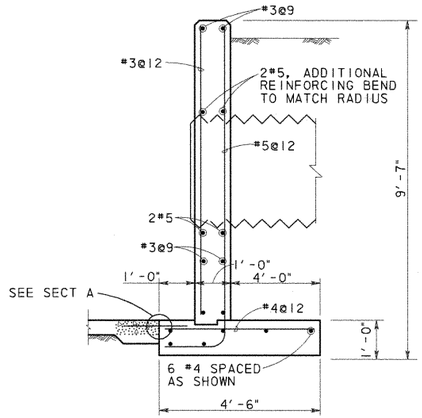

SECTION B-B
SCALE: 1/2" = 1'-0"

POND SPRINGS HEADWALL ESTIMATE QUANTITIES	
CONCRETE (YD^3) *	REINFORCING (LB) *
20.8	672

* QUANTITIES FOR CONTRACTOR'S INFORMATION ONLY. QUANTITIES SHOWN DO NOT INCLUDE THE .5 MCW-F2 WINGWALL OR THE CULVERT CURB.

THE HEADWALL SHALL BE PAID FOR AS MCW-F2(SPL).

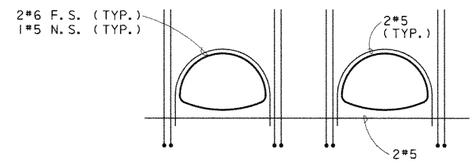

ADDITIONAL REINFORCMENT SHOWN. SEE SECTION B FOR TYPICAL

ELEVATION @ ARCH PIPE
N. T. S.

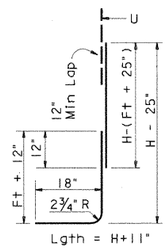

BARS B

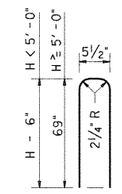

BARS U

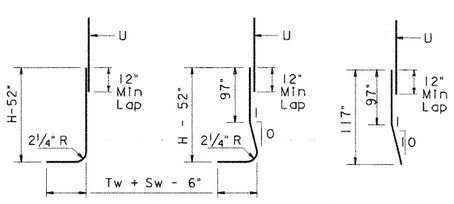

BARS A1

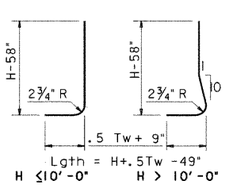

BARS A2

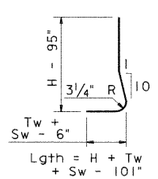

BARS A3

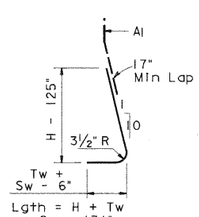

BARS A4

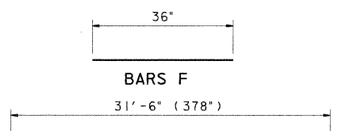

BARS D, H, T

BAR DETAILS POND SPRING

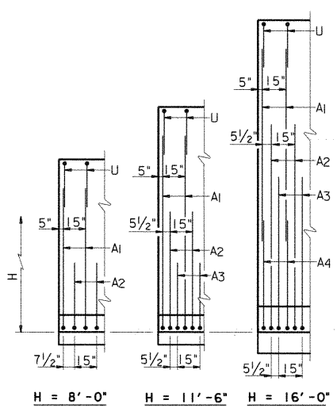

PARTIAL WALL ELEVATIONS
(Showing vertical reinforcing pattern in back face)

STATE OF TEXAS
WILLY R. BURNS
44162
REGISTERED
PROFESSIONAL ENGINEER
6/8/98

NO.	DATE	REVISION	APPROVED

Turner Collie & Braden Inc.
Engineers • Planners • Project Managers

TRANSPORTATION | Job No. 81-07401-024 | Approved

© 1998 Texas Department of Transportation

US 183
MISCELLANEOUS
WATER QUALITY PONDS
STRUCTURAL DETAILS

SCALE: AS NOTED | SHEET 10 OF 11

Designed	WRB	FED. RD. DIV. NO.	STATE	FEDERAL AID PROJECT NO.				HIGHWAY NO.
Checked		6	TEXAS	NH99(556)				US 183
Drawn	MR	STATE DIST. NO.	COUNTY	CONTROL NO.	SECTION NO.	JOB NO.		SHEET NO.
Checked		14	WILLIAMSON	151	5	072		261J

UGPDT10.DGN

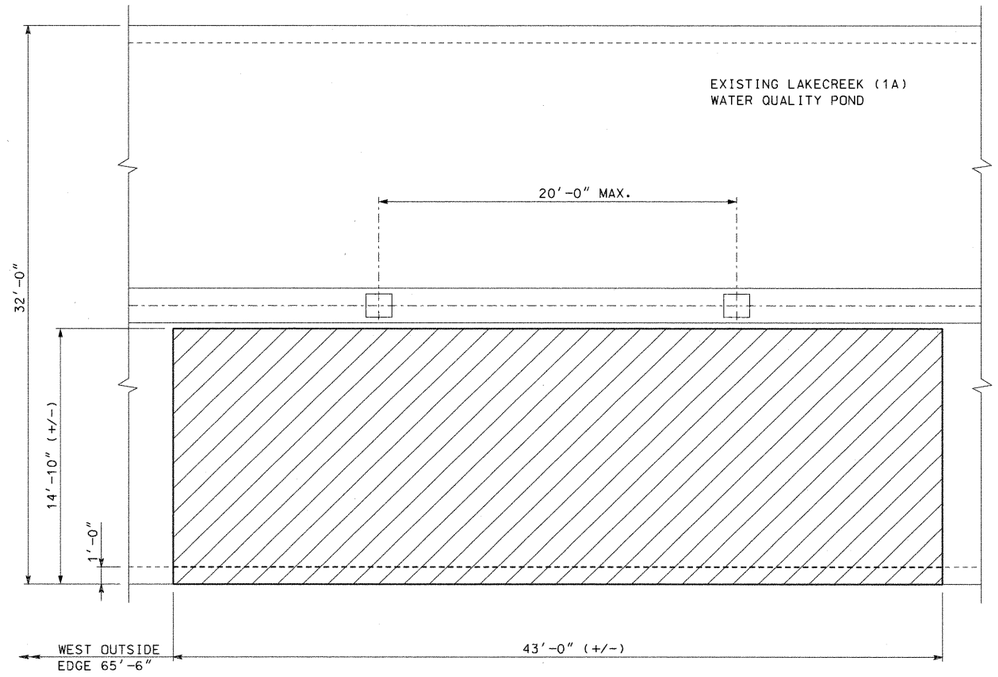

DEMOLITION PLAN
SCALE: 1/4" = 1'-0"

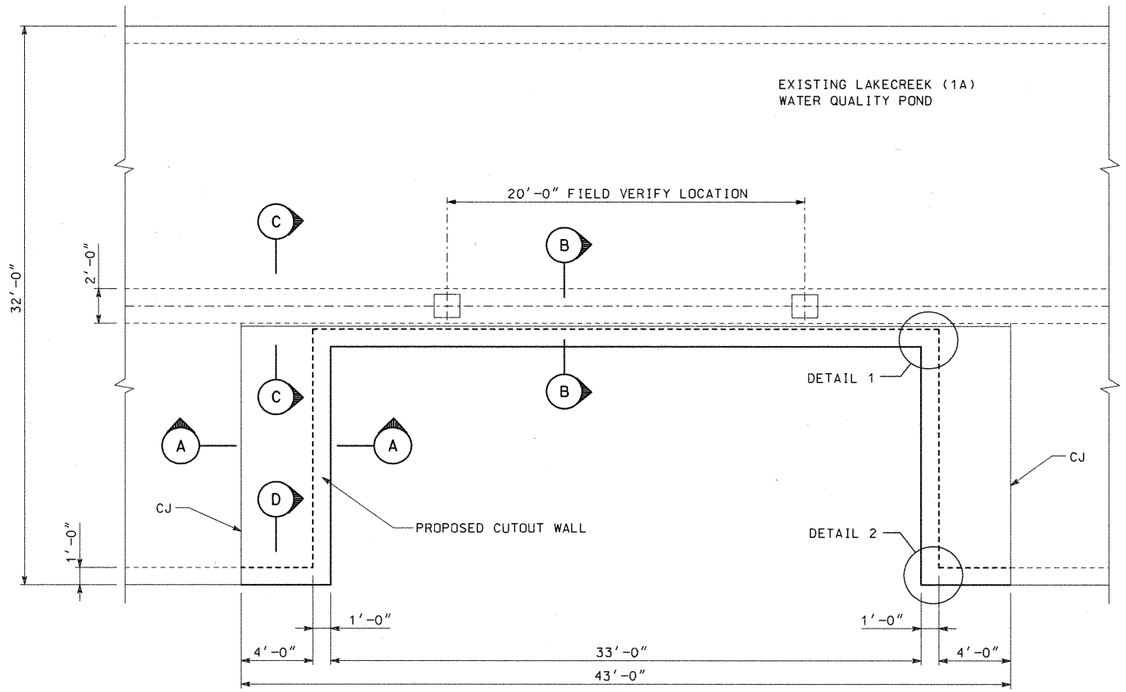

PARTIAL PLAN
SCALE: 1/4" = 1'-0"

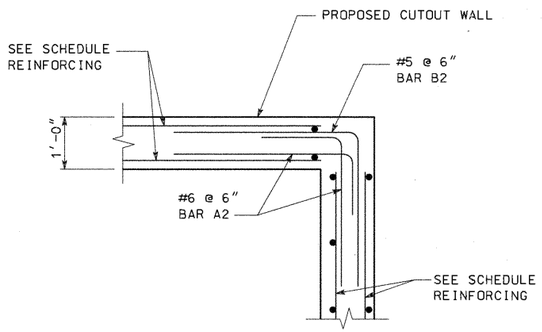

DETAIL 1
SCALE: 3/8" = 1'-0"

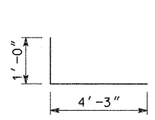

BARS A1 (#6)

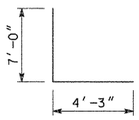

BAR B1 (#6)

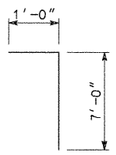

BAR A2 (#6)

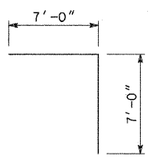

BAR B2 (#5)

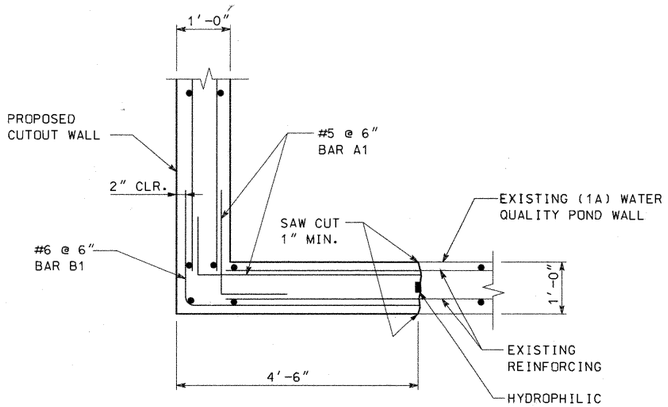

DETAIL 2

NOTES:

1. DESIGN IN ACCORDANCE WITH AASHTO 1996 STANDARD SPECIFICATIONS FOR HS-20 LOADING.
2. ALL CONCRETE SHALL BE CLASS "C".
3. WATERSTOPS SHALL BE HYDROPHILIC WATERSTOPS.

STATE OF TEXAS
WILLY R. BURNS
44162
REGISTERED
PROFESSIONAL ENGINEER
11/21/00

NO.	DATE	REVISION	APPROVED
		Change Order No 10A	

Turner Collie & Braden Inc.
Engineers • Planners • Project Managers

Date		Job No.	Approved
TRANSPORTATION		81-07401-024	

© 1998 Texas Department of Transportation

US 183
LAKECREEK
CUTOUT WALL
STRUCTURAL DETAILS

SHEET 1 OF 2

Designed	WRB	FED. RD. DIV. NO.	STATE	FEDERAL AID PROJECT NO.					HIGHWAY NO.
Checked		6	TEXAS	NH99(556)					US 183
Drawn	JAF	STATE DIST. NO.	COUNTY		CONTROL NO.	SECTION NO.	JOB NO.		SHEET NO.
Checked		14	WILLIAMSON		151	5	072		261K

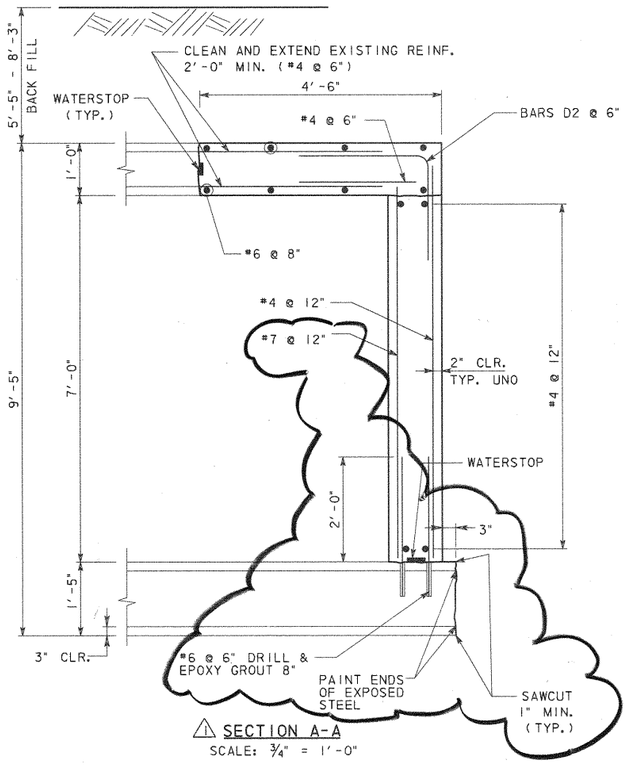

⚠ SECTION A-A
SCALE: ¾" = 1'-0"

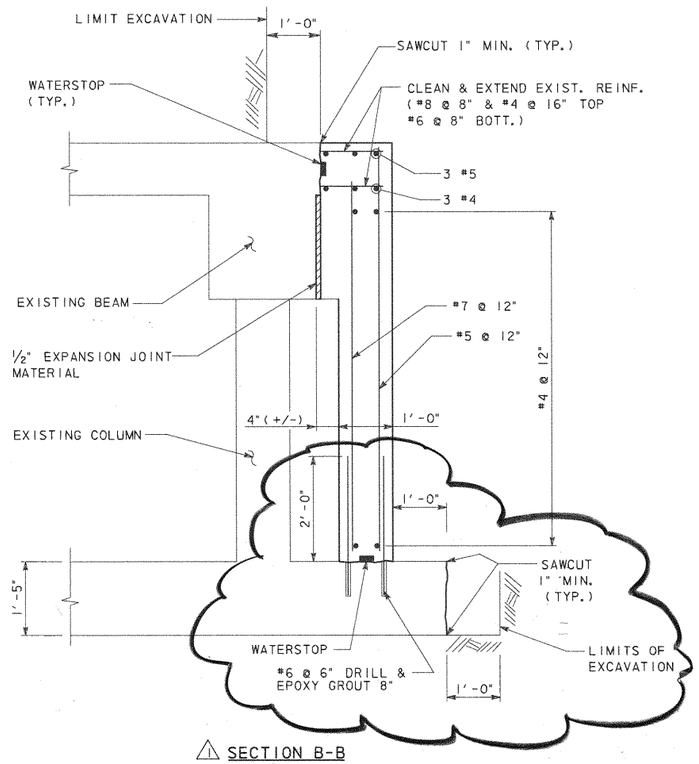

⚠ SECTION B-B
SCALE: ¾" = 1'-0"

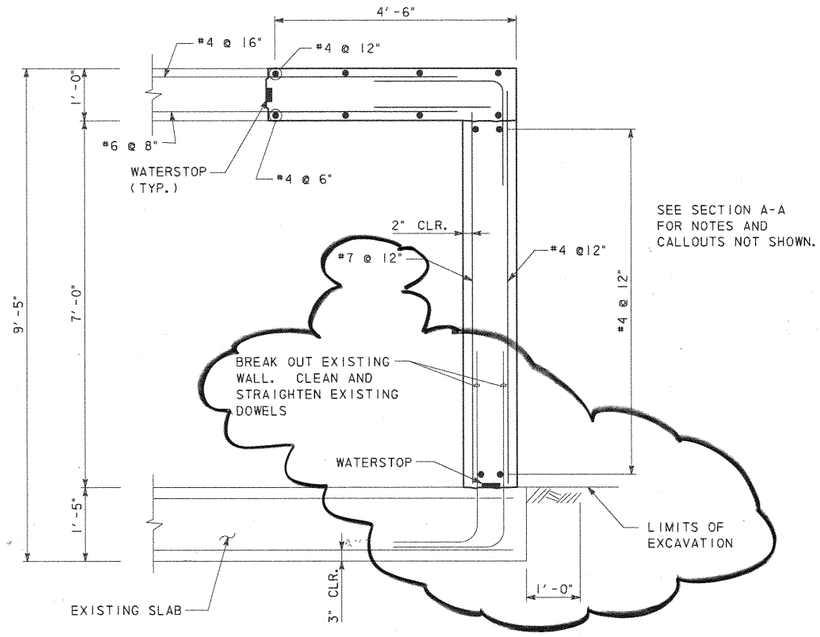

⚠ SECTION D-D
SCALE: ¾" = 1'-0"

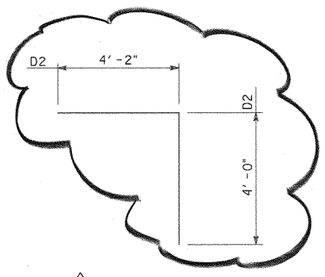

⚠ BARS D (#6)

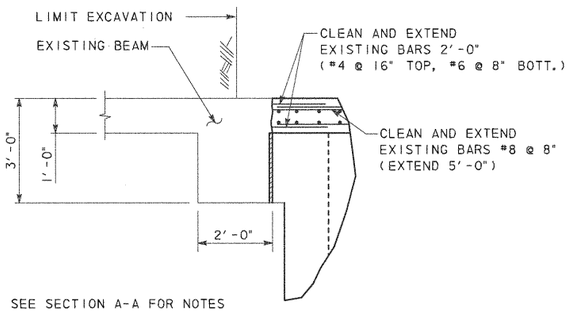

SEE SECTION A-A FOR NOTES AND REINFORCEMENT INFORMATION

SECTION C-C
SCALE: ½" = 1'-0"

DESCRIPTION	CLASS "C" CONC.	EXCAVATION	TEMP. SPL. SHORING	REINF. STEEL	DEMOLITION
	CY	CY	SF	LBS	CY
CUTOUT (NORTH)	22.2	255	789	9610	71.0

STATE OF TEXAS
WALLY R. BURNS
44162
REGISTERED PROFESSIONAL ENGINEER

Wally R Burns
11/13/02

NO.	DATE	REVISION	APPROVED
		CHANGE ORDER 10A	
⚠ 1	JAN 2002	REVISED SLAB CONN.	WRB

Turner Collie & Braden Inc.
Engineers • Planners • Project Managers

TRANSPORTATION | Job No. 81-07401-024

© 1998 Texas Department of Transportation

US 183
LAKECREEK
CUTOUT WALL
STRUCTURAL DETAILS

SHEET 2 OF 2

Designed	WRB	FED. RD. DIV. NO.	STATE	FEDERAL AID PROJECT NO.				HIGHWAY NO.
Checked		6	TEXAS	NH99(556)				US 183
Drawn	JAF	STATE DIST. NO.	COUNTY	CONTROL NO.	SECTION NO.	JOB NO.		SHEET NO.
Checked		14	WILLIAMSON	151	5	072		261 L

0151-05-072 CO 10-A

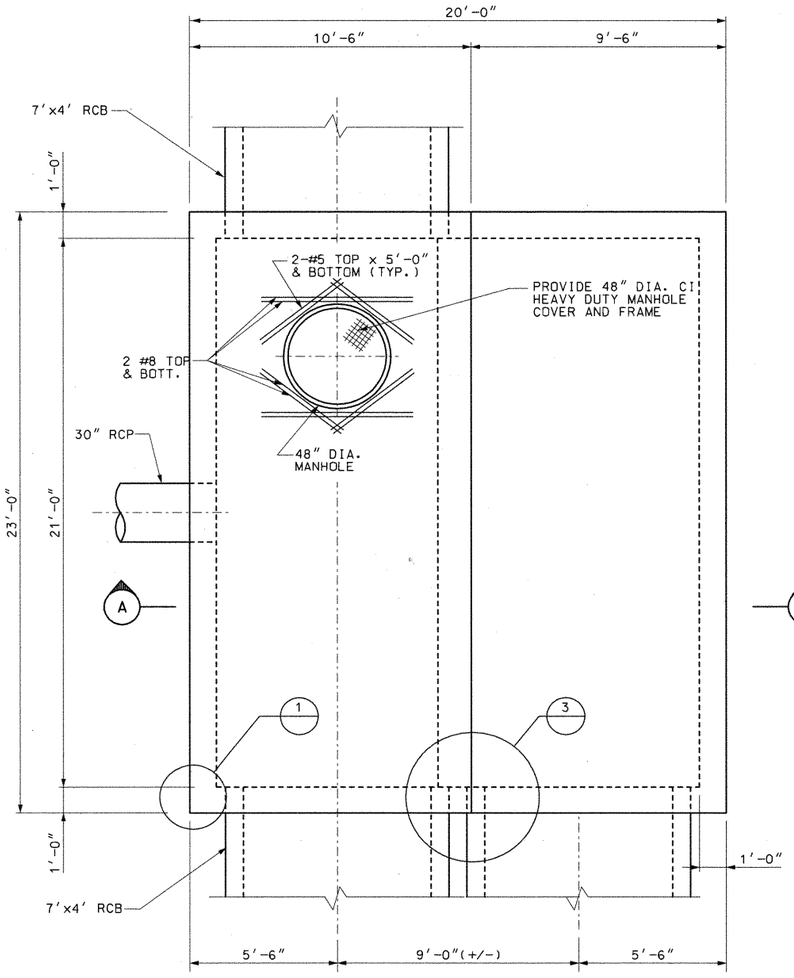

PLAN
$\frac{3}{8}$" = 1'-0"

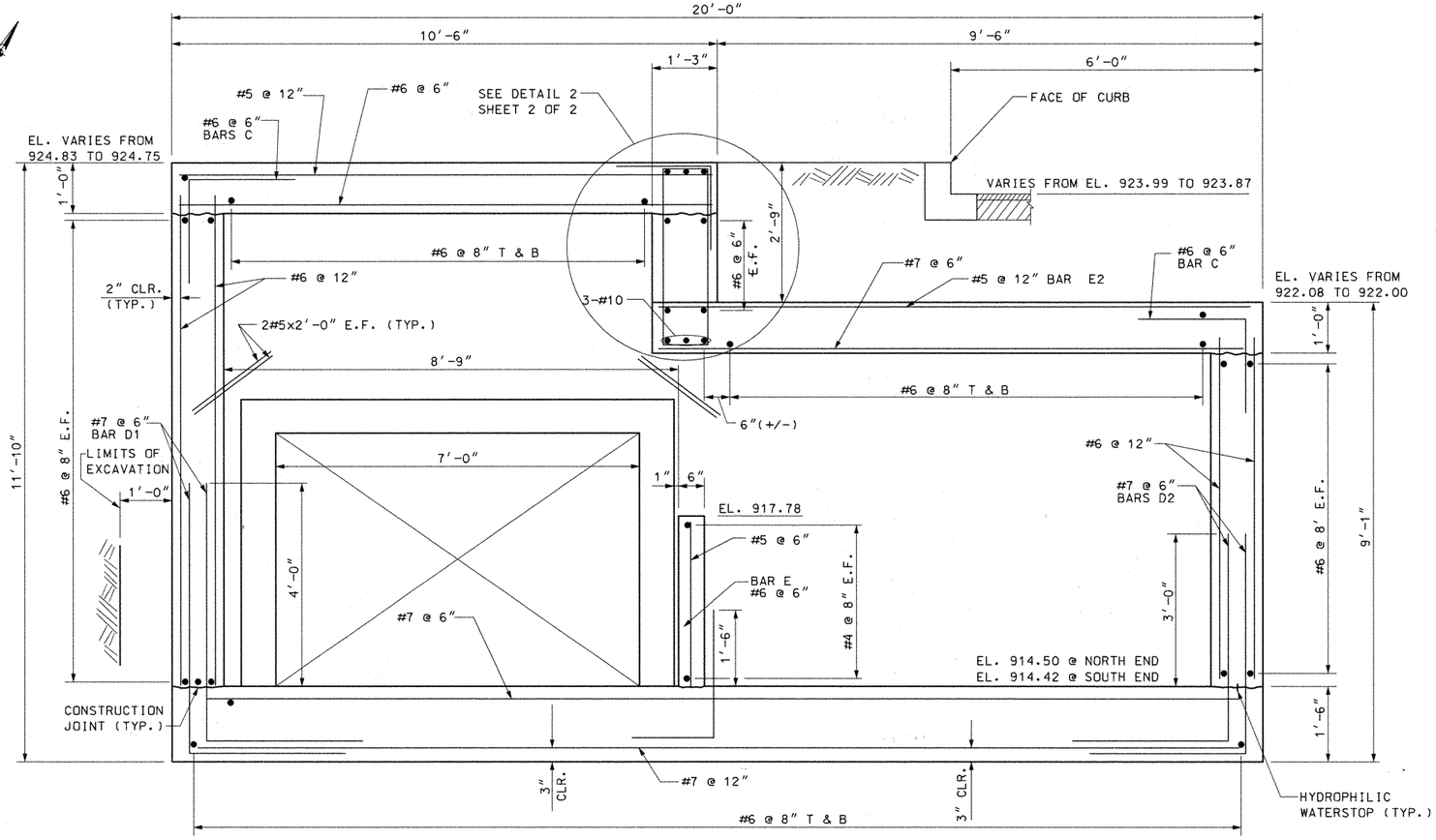

SECTION A-A
$\frac{3}{4}$" = 1'-0"

NOTES:

1. DESIGN IN ACCORDANCE WITH AASHTO 1996 STANDARD SPECIFICATIONS FOR HS-20 LOADING.
2. ALL CONCRETE SHALL BE CLASS "C".
3. SEE HYDRAULIC DETAIL SHEETS FOR FLOW LINES.
4. WATERSTOPS SHALL BE HYDROPHILIC WATERSTOPS.

STATE OF TEXAS
WALLY R. BURNS
44162
REGISTERED PROFESSIONAL ENGINEER
11/21/00

NO.	DATE	REVISION	APPROVED
		Change Order No 10 A	

Turner Collie & Braden Inc.
Engineers • Planners • Project Managers

TRANSPORTATION (Unit) | 83-07401-024 (Job No.) | (Approved)

© 1998 Texas Department of Transportation

US 183
LAKECREEK
WATER QUALITY POND
STRUCTURAL DETAILS

SHEET 1 OF 2

Designed	Proj. No. Div. No.	State	Federal Aid Project No.	Highway No.
WRB	6	TEXAS	NH99(556)	US 183
Checked				
JAF	State Dist. No.	County	Control No. / Section No. / Job No.	Sheet No.
Drawn	14	WILLIAMSON	151 / 5 / 072	261M
Checked				

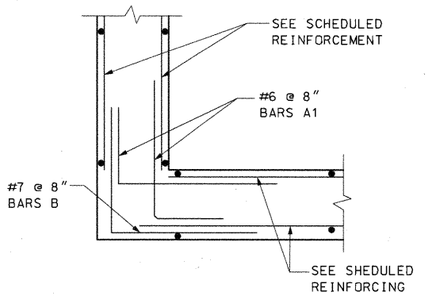

DETAIL 1 (ABOVE EL. 920'-1")
1" = 1'-0"

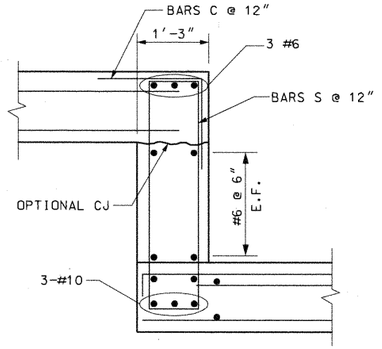

DETAIL 2
1" = 1'-0"

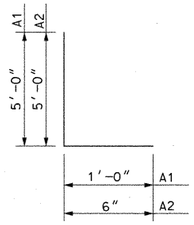

BARS A (#6)

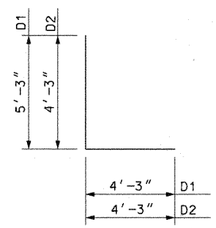

BARS D (#7)

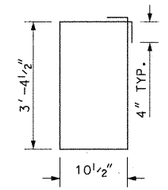

BARS S (#4)

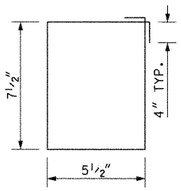

BARS S1 (#3)

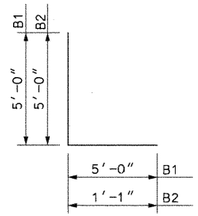

BARS B (#7)

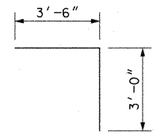

BARS C (#6)

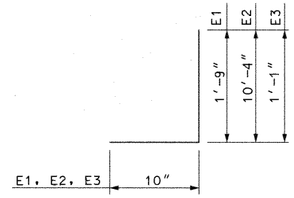

BARS E (#5)

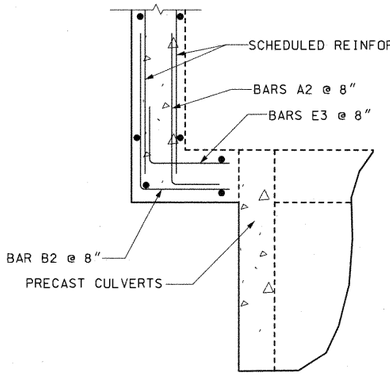

DETAIL 1 (BELOW EL. 920'-1")
1" = 1'-0"

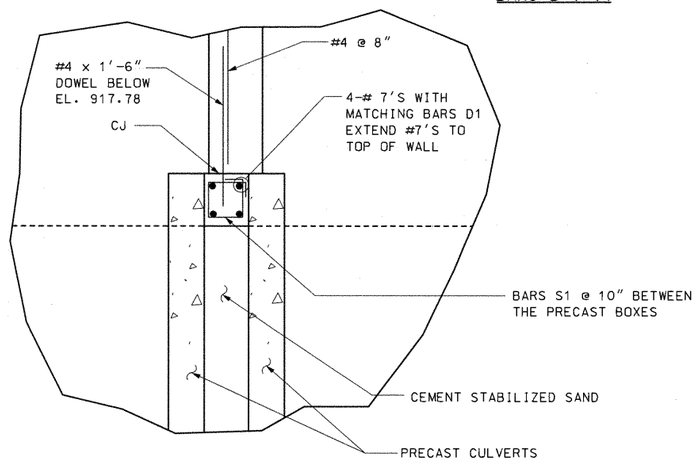

DETAIL 3 (BELOW EL. 920'-1")
1" = 1'-0"

ESTIMATED QUANTITIES *				
DESCRIPTION	CLASS "C" CONC.	EXCAVATION	TEMP SPL SHORING	REINF. STEEL
	CY	CY	SF	LBS
SPLITTER BOX FOR WATER QUALITY POND	72.1	240	1089	23,270

* QUANTITIES FOR CONTRACTOR'S INFORMATION ONLY.
ALL ITEMS ARE SUBSIDIARY TO THE SPLITTER BOX ITEM.

STATE OF TEXAS
WALLY R. BURNS
44162
REGISTERED PROFESSIONAL ENGINEER
11/21/00

NO.	DATE	REVISION	APPROVED
		Change Order No 10A	

Turner Collie & Braden Inc.
Engineers • Planners • Project Managers

UNIT	JOB NO.	Approved
TRANSPORTATION	81-07401-024	

© 1998 Texas Department of Transportation

US 183
LAKECREEK
WATER QUALITY POND
STRUCTURAL DETAILS

SHEET 2 OF 2

Designed	WRB	FED. RD. DIV. NO.	STATE	FEDERAL AID PROJECT NO.				ASSIGNMENT NO.
Checked		6	TEXAS	NH99(555)				US 183
Drawn	JAF	STATE DIST. NO.	COUNTY	CONTROL NO.	SECTION NO.	JOB NO.		SHEET NO.
Checked		14	WILLIAMSON	151	5	072		2&1N

Job 10A
0121-02-055

AF 41904A

Ultimate Drainage Areas North of R.M. 620 Were Used In Storm Sewer And Water Quality Pond Design

R.M. 620

PECAN PARK

LAKE CREEK PARKWAY

HYMEADOW

Q50 = 447.4 cfs
Outfall 1

Pond 1A

Pond 1B

Pond 1C

Outfall 2
Q100 = 412 cfs
Q50 = 385 cfs

Pond 2A

Pond 2B

Pond 2C

Pond 2D1

Pond 2D2

R.M. 620 Median Pond

Q50 = 800 cfs

Q50 = 89.2 cfs

To Drainage Structures (By Others)

MELLOW MEADOWS DRIVE

LAKESTOP BLVD.

Interim Drainage Areas

US 183

R.M. 620

ANDERSON MILL ROAD

CONTRIBUTING AREA TO LAKE CREEK CHANNEL

A_{TOTAL} = 1133 ACRES
Q_{50} = 4100 cfs *
Q_{100} = 4400 cfs *

* THESE FLOWS ARE BASED ON REGIONAL ANALYSIS OF THE ENTIRE CONTRIBUTING AREA AND DO NOT EQUATE TO THE ACCUMULATED THYSYS FLOWS.

Q50 = 200 cfs

NO.	DATE	REVISION	APPROV.
4			
3			
2			
1			

Turner Collie & Braden Inc.
CONSULTING ENGINEERS
TEXAS AUSTIN/DALLAS/HOUSTON/PORT ARTHUR
COLORADO DENVER

Unit: AUSTIN | Job No. 72-07401-022 | Approved

STATE DEPARTMENT OF HIGHWAYS AND PUBLIC TRANSPORTATION

©1998 TxDOT

DRAINAGE AREA MAP

SCALE: 1" = 200'

Designed DAN	FED. NO. DIV. NO.	STATE	FEDERAL AID PROJECT NO.			HIGHWAY NO.
Checked	6	TEXAS	NH 99(556)			U.S. 183
Drawn WWS	STATE DIST. NO.	COUNTY	CONTROL NO.	SECTION NO.	JOB NO.	SHEET NO.
Checked DAN	14	WILLIAMSON	151	05	072	262a

STATE OF TEXAS
Robert W. Barnett
49537
REGISTERED PROFESSIONAL ENGINEER

Robert W. Barnett
5-09-88

A.F. 61904A

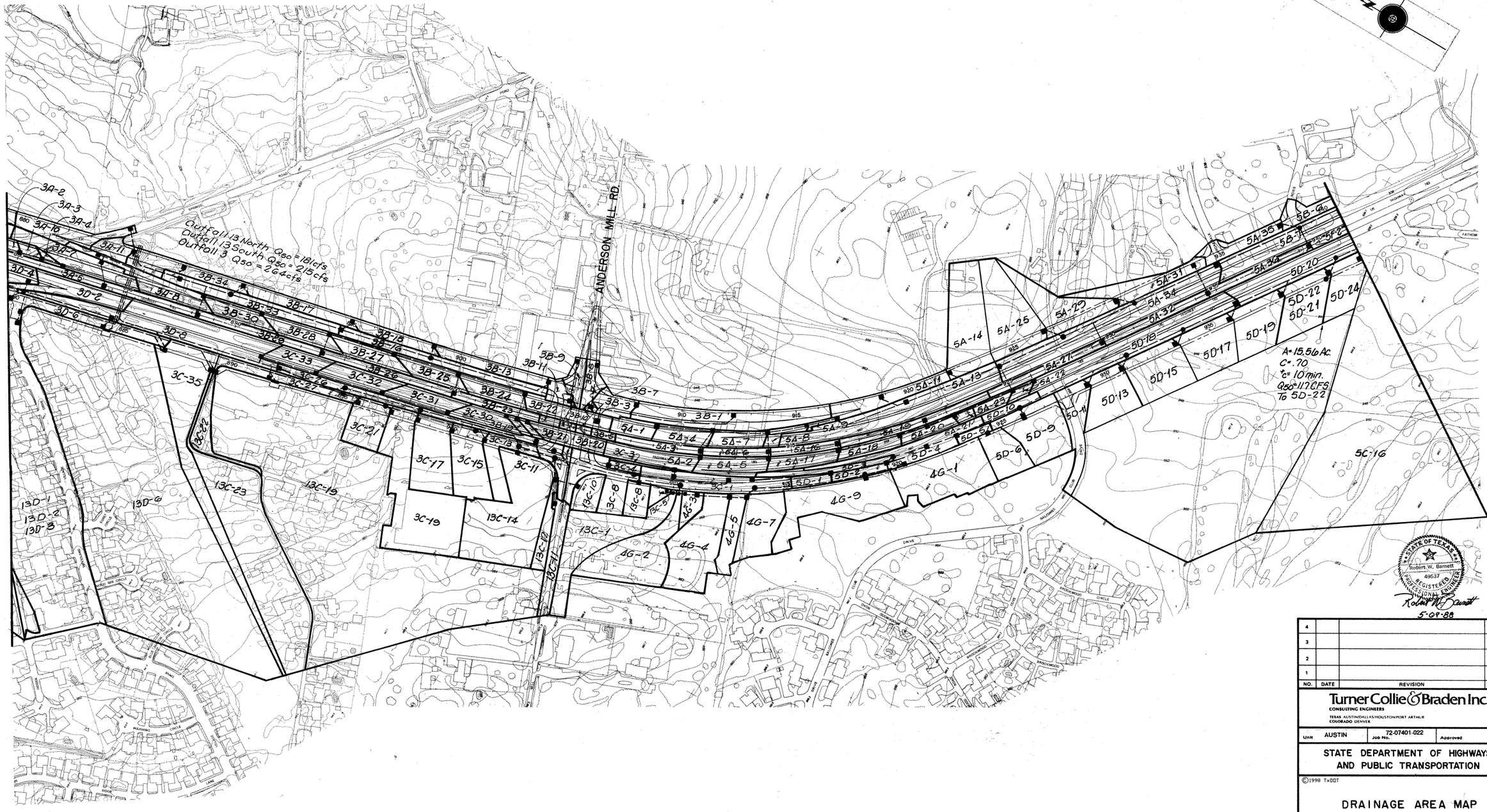

NO.	DATE	REVISION	APPROV.
4			
3			
2			
1			

Turner Collie & Braden Inc.
CONSULTING ENGINEERS
TEXAS AUSTIN/DALLAS/HOUSTON/PORT ARTHUR
COLORADO DENVER

Unit AUSTIN | Job No. 72-07401-022 | Approved

STATE DEPARTMENT OF HIGHWAYS AND PUBLIC TRANSPORTATION

©1998 TxDOT

DRAINAGE AREA MAP

SCALE: 1"=200'

Designed DAN	FED. RD. DIV. NO.	STATE	FEDERAL AID PROJECT NO.			HIGHWAY NO.
Checked	6	TEXAS	NH 99(556)			U.S. 183
Drawn WWS	STATE DIST. NO.	COUNTY	CONTROL NO.	SECTION NO.	JOB NO.	SHEET NO.
Checked DAN	14	WILLIAMSON	151	05	072	202b

A.F. 41804A

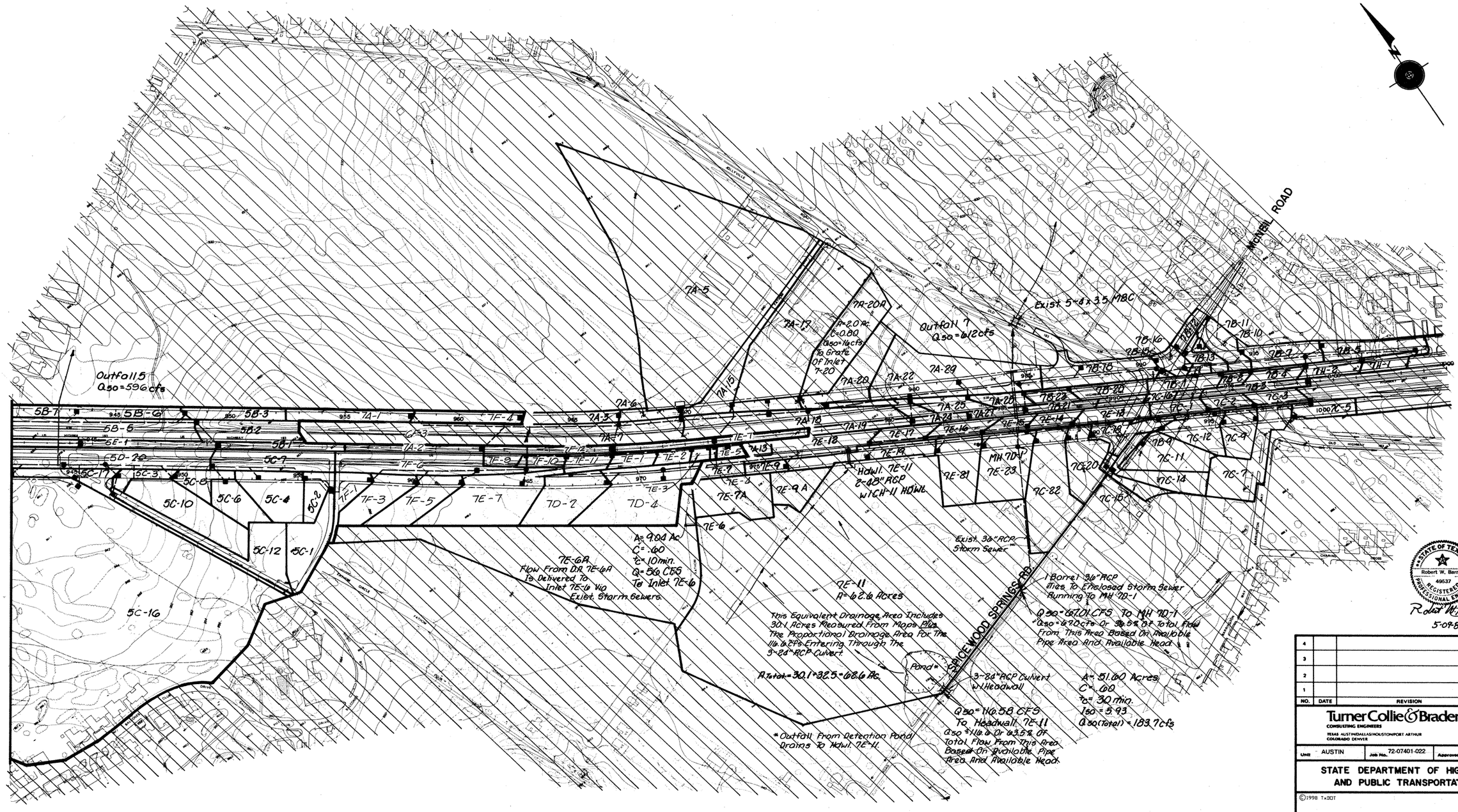
MICHEL ROAD
Outfall 5
Q50=596cfs
Outfall 7
Q50=612cfs
Exist 5-8'x3.5' MBC
7A-5
7A-17
7A-20A
A=2.0 Ac.
C=0.80
Q50=14cfs
To Grate Of Inlet 7-20
7A-15
7A-6
7A-3
7A-7
7A-18
7A-19
7A-20
7A-22
7A-29
7A-25
7A-24
7A-27
7A-26
7A-1
7A-2
7A-13
7F-4
7F-12
7F-11
7F-10
7F-9
7F-8
7F-6
7F-5
7F-3
7F-2
7F-1
7E-1
7E-2
7E-5
7E-7
7E-8
7E-9
7E-9A
7E-9A
7E-6
7E-3
7E-4
7E-7A
7E-10
7E-12
7E-13
7E-14
7E-15
7E-16
7E-17
7E-18
7E-19
7E-11
7E-81
7E-82
7E-23
MH 7D-1
7D-2
7D-4
HDWL 7E-11
2-48" RCP
W/CH-11 HDWL
5B-7
5B-6
5B-5
5B-3
5B-2
5B-1
5E-1
5D-20
5C-17
5C-7
5C-3
5C-8
5C-10
5C-6
5C-4
5C-2
5C-12
5C-1
5C-16
7B-11
7B-10
7B-16
7B-15
7B-13
7B-12
7B-14
7B-18
7B-17
7B-1
7B-2
7B-3
7B-4
7B-5
7B-6
7B-7
7B-8
7B-9
7B-21
7B-22
7B-23
7C-16
7C-1
7C-2
7C-3
1000 7C-5
7C-18
7C-19
7C-20
7C-12
7C-4
7C-11
7C-14
7C-7
7C-82
7C-15
7D-9
7D-11
7D-12
7D-13
7D-14
7D-15
7D-16
7D-17
7D-18
7D-19
7D-20
7D-21
7D-22
7D-23
7D-24
7D-25
7D-26
7D-27
7D-28
7D-29
7D-30
7D-31
7D-32
7D-33
7D-34
7D-35
7D-36
7D-37
7D-38
7D-39
7D-40
7D-41
7D-42
7D-43
7D-44
7D-45
7D-46
7D-47
7D-48
7D-49
7D-50

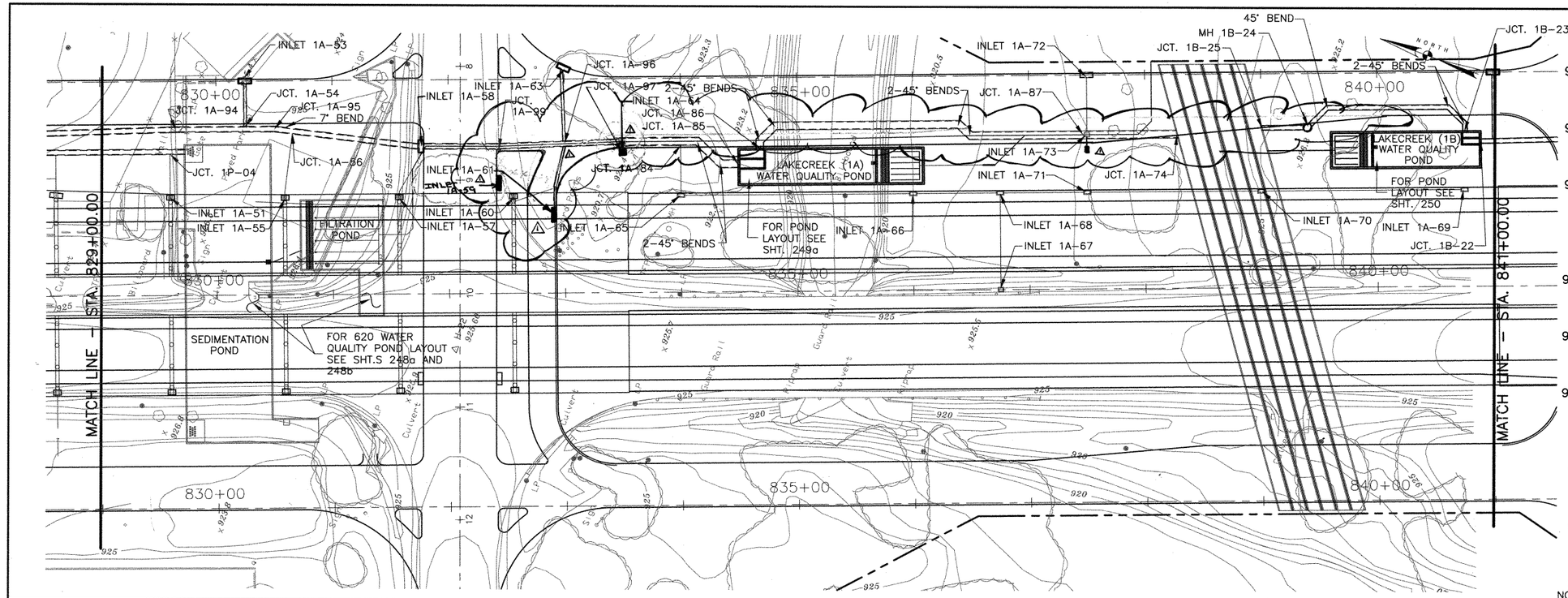
MATCH LINE – STA. 829+00.00
MATCH LINE – STA. 841+00.00
INLET 1A–53
JCT. 1A–54
JCT. 1A–94
JCT. 1A–95
7° BEND
JCT. 1A–56
JCT. 1P–04
INLET 1A–51
INLET 1A–55
INLET 1A–58
INLET 1A–63
JCT. 1A–96
JCT. 1A–97
2–45° BENDS
JCT. 1A–99
INLET 1A–64
JCT. 1A–86
JCT. 1A–85
INLET 1A–61
INLET 1A–59
JCT. 1A–84
INLET 1A–60
INLET 1A–57
INLET 1A–65
FILTRATION POND
SEDIMENTATION POND
FOR 620 WATER QUALITY POND LAYOUT SEE SHT.S 248a AND 248b
LAKECREEK (1A) WATER QUALITY POND
FOR POND LAYOUT SEE SHT. 249a
2–45° BENDS
INLET 1A–66
INLET 1A–72
JCT. 1B–24
JCT. 1B–25
45° BEND
2–45° BENDS
JCT. 1A–87
INLET 1A–73
INLET 1A–71
JCT. 1A–74
INLET 1A–68
INLET 1A–67
LAKECREEK (1B) WATER QUALITY POND
FOR POND LAYOUT SEE SHT. 250
INLET 1A–70
INLET 1A–69
JCT. 1B–22
JCT. 1B–23
830+00
835+00
840+00
NORTH
STA. 829+60 ~ 126.67' LT. ℄
JCT. 1P–04
STA. 829+60.21 ~ 106.42' RT. ℄
STA. 829+60.21 ~ 82.08' LT. ℄
PLUG – TEMPORARY
TIE TO 1A–51
FL 920.65
43' ~ 18" RCP @ 7.47%
FL 917.29
FL 916.04
STA. 830+65.55 ~ 142.24' LT. ℄
JCT. 1A–56
STA. 830+58.71 ~ 107.42' RT. ℄
STA. 830+58.71 ~ 81.08' LT. ℄
PLUG – TEMPORARY
TIE TO 1A–55
FL 920.09
62' ~ 18" RCP @ 2.36%
FL 918.63
FL 916.34
STA. 9+00 ~ 83' ℄ R.M. 620
STA. 832+92.87 ~ 99.33' LT. ℄
INLET C.I. 1A–61
TYPE IIR (10')
T.C. 922.96
STA. 832+55.71 ~ 107.42' RT. ℄
STA. 832+55.71 ~ 81.08' LT. ℄
PLUG – TEMPORARY
TIE TO 1A–60
FL 919.96
FL 919.46
FL 920.10
40 ~ 18" RCP @ 0.33%
Guard Rail
Culvert
Curb Inlet
Headwall
LP
SIDEWALK
x 925.7
x 925.5
x 926.6
x 926.8
x 924.6
x 924.9
925.2
923.3
923.2
920.5
926.3
926.4
926.5
926.6
926.7
926.8
926.9
927.0
927.1
927.2
927.3
927.4
927.5
927.6
927.7
927.8
927.9
928.0
928.1
928.2
928.3
928.4
928.5
928.6
928.7
928.8
928.9
929.0
929.1
929.2
929.3
929.4
929.5
929.6
929.7
929.8
929.9
930.0
930.1
930.2

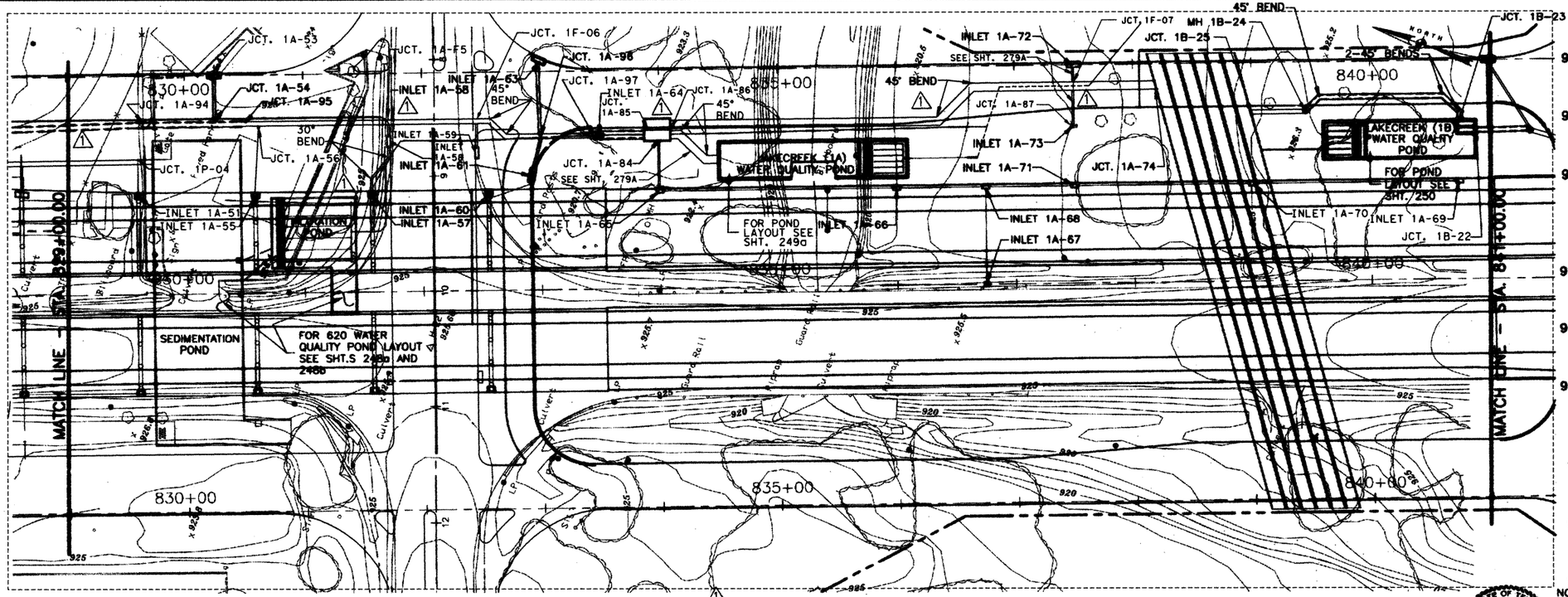

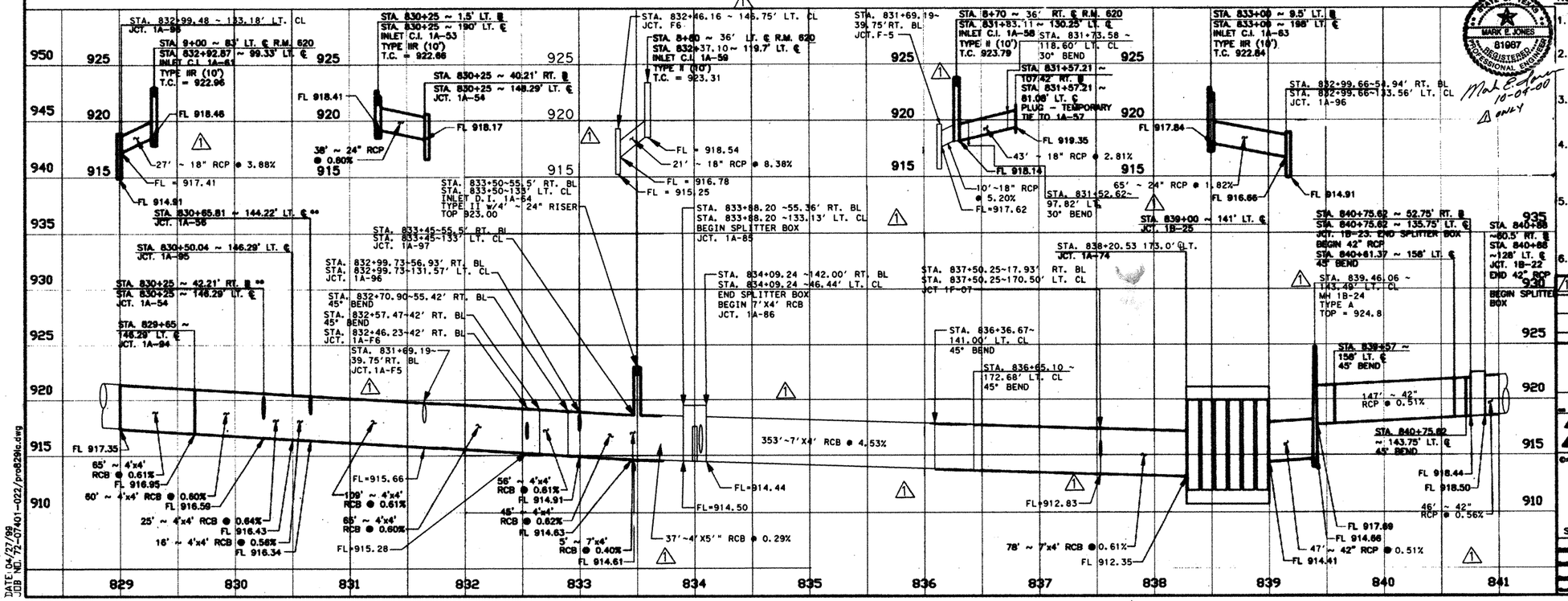

NOTES:

1. SEE MAIN LANE STORM SEWER PROFILES SHEET 316 FOR MAIN LANE DRAINAGE.
2. SWALES AND INLETS IN SEPARATION AREA WILL TYPICALLY BE 6' BEHIND FACE OF CURB UNLESS DIMENSIONED OTHERWISE.
3. FOR INLETS 1A-51, 1A-55, 1A-57, & 1A-60, SEE SCUPPER DETAILS, INTERIOR BENT DETAILS, SHT.S 448 AND 449.
4. LOCATION AND FLOWLINES OF EXIST. PIPE TO BE FIELD VERIFIED BY CONTRACTOR.*
5. ALL BENDS IN BOX CULVERTS ARE CALLED OUT FROM CENTERLINE OF STRUCTURE.
6. ** STATION/OFFSETS CALLED OUT FROM CENTERLINE OF STRUCTURE.

STATE OF TEXAS — MARK E. JONES — 81067 — REGISTERED PROFESSIONAL ENGINEER — Mark E. Jones 10-07-00 — ⚠ ONLY

STATE OF TEXAS — REBECCA A. BILLS — 82587 — REGISTERED PROFESSIONAL ENGINEER — Rebecca A. Bills 5-5-99

	CHANGE ORDER NO. 10
⚠	

Turner Collie & Braden Inc.
ENGINEERS • PLANNERS • PROJECT MANAGERS

AUSTIN — 72-07401-022

Texas Department of Transportation

LEFT STORM SEWER PLAN & PROFILE STA. 829+00 TO STA. 841+00

SCALE: H:1"=50', V:1"=5'

DIST	COUNTY	FEDERAL AID PROJECT NO.	SHEET NO.
AUS	WILLIAMSON	NH 99(556)	275A

DESIGNED	DETAILED	QUANTITIES	CHECKED
RAB	BB	MRE	CDB

HIGHWAY NO.	CONTROL	SECTION	JOB
U.S.183	0151	05	072

DATE: 04/27/00
JOB NO. 72-07401-022/pro829lc.dwg

	ITEM 100	ITEM 110	ITEM 110	ITEM 132	ITEM 132	ITEM 160	ITEM 160	ITEM 164	ITEM 164	ITEM 164	ITEM 168	ITEM 169	ITEM 169	ITEM 247	ITEM 310	ITEM 400	ITEM 400	ITEM 402	ITEM 421	ITEM 423	ITEM 432	ITEM 450	ITEM 450	ITEM 460	ITEM 462	ITEM 462	ITEM 462
	Prep. R.O.W.	EXCAV (CHANNEL)	EXCAV (POND)	EMBANK (TY B)	EMBANK (DC) (TY C) MOD	Furn & Plac Tpsl (Cl 2) (4in)	Furn & Plac Tpsl (Cl 2) (6in)	Cell Fib Mulch Seed	Drill Seed (Temp) (Warm)	Drill Seed (Perm) (Urban) (Clay)	Vegetative Watering	SOIL RET BLNKT (CL1) (TY A)	SOIL RET BLNKT (CL2)(TY G)	Fl Bs (TyD Gr6 Cl 2) (Comp In Plac)	Apsh Mat (MC-30)	Struct Excav (Sewer)	Struct Excav (Culv Large)	TRENCH EXCAV PROTECT	CL C Conc. (misc.)	Pond Wall (Cast-In-Place)	RIPRAP (CONC.) (CL B)	Rail (TY PR)	Rail (TY C4) (S)	CMP (Gal Stl 12in)	Conc Box Culv (2'x4')	Conc Box Culv (4'x4')	Conc Box Culv (6'x4')
	AC	CY	CY	CY	CY	SY	SY	SY	SY	SY	MG	SY	SY	TONS	GAL	CY	CY	LF	CY	SF	CY	LF	LF	LF	LF	LF	LF
620 Median Pond	–	–	7313	–	892	–	2144	–	1072	2144	54	–	–	–	–	4130	–	2165	81.3	9811	5.1	–	1055	35	–	–	468
LakeCreek Pond 1A	–	–	(2053)	–	–	–	–	–	–	–	–	–	–	–	–	107	–	95	–	–	–	–	–	6	–	–	–
LakeCreek Pond 1B	–	–	(1908)	–	–	–	–	–	–	–	–	–	–	–	–	42	–	54	–	–	–	–	–	6	–	–	–
LakeCreek Pond 1C	–	–	(1657)	–	–	–	–	–	–	–	–	–	–	–	–	7	–	10	–	–	–	–	–	6	–	–	–
Hymeadow Pond 2A	–	–	(3048)	–	–	–	–	–	–	–	–	–	–	–	–	115	–	62	–	–	–	–	–	6	–	–	–
Hymeadow Pond 2B	–	–	(1529)	–	–	–	–	–	–	–	–	–	–	–	–	2	–	7	–	–	–	–	–	6	–	–	–
Hymeadow Pond 2C	–	–	(2260)	–	–	–	–	–	–	–	–	–	–	–	–	50	–	34	–	–	–	–	–	6	–	–	–
Hymeadow Pond 2D1	–	–	(3286)	–	–	–	–	–	–	–	–	–	–	–	–	212	–	124	–	–	–	–	–	6	–	–	–
Hymeadow Pond 2D2	–	–	(4381)	–	–	–	–	–	–	–	–	–	–	–	–	1893	–	735	–	–	–	–	–	6	–	–	–
Pond Springs Pond	1.04	93	5300	–	441	–	5056	–	2420	4840	121	1403	–	45	–	1656	–	336	57.8	5002	78	–	–	13	–	44	–
Pond Springs Detention Pond	1.15	1162	22610	308	–	1459	2780	–	3391	6782	279	363	2186	141	50	2056	756	1135	–	24431	280	120	140	0	–	–	–
Woods Pond	7.1	2640	64420	1202	8970	–	34364	437	18275	36550	859	6500	6500	275	–	2016	–	649	–	–	166.5	–	–	75	152	–	–
TOTAL	9.29	3895	99643	1510	10303	1459	44,344	437	25158	50316	1313	8266	8686	461	50	12286	756	5406	139.1	39244	529.6	120	1195	171	152	44	468

	ITEM 462	ITEM 462	ITEM 462	ITEM 462	ITEM 462	ITEM 462	ITEM 464	ITEM 464	ITEM 464	ITEM 464	ITEM 465	ITEM 465	ITEM 465	ITEM 465	ITEM 466	ITEM 466	ITEM 466	ITEM 466	ITEM 466	ITEM 466	ITEM 466	ITEM 467	ITEM 481	ITEM 481	ITEM 481	ITEM 481	ITEM 529	ITEM 530
	Conc Box Culv (4'x4')	Conc Box Culv (6'x4')	Conc Box Culv (6'x5')	Conc Box Culv (7'x4')	Conc Box Culv (8'x4')	Conc Box Culv (8'x6')	RCP SEW (D-LOAD) (18")	RCP SEW (D-LOAD) (24")	RCP SEW (D-LOAD) (36")	RCP SEW (D-LOAD) (48")	MAN H (COMPL) TY A	INLET (COMPL) (DROP) (TY I)	INLET (COMPL) (DROP) (TY IB)	INLET (COMPL) (DROP) (TY II)	CULV HDWLL TY PW-45	CULV HDWLL TY MCW-P-15 MOD	CULV HDWLL TY MCW-P-30 MOD	CULV HDWLL TY MCW-P-45 MOD	CULV HDWLL TY MCW-F1-30	CULV HDWLL TY FW-N	CULV HDWLL TY FW-45	S.E.T. TYII	* P.V.C. PIPE (SCH 40) 4"	* P.V.C. PIPE (SCH 40) 6"	* P.V.C. PIPE (SCH 40) 8"	* P.V.C. PIPE (SCH 40) 12"	* CONC. CURB (TY II) (6 IN)	CONC. DRVWY
	LF	LF	LF	LF	LF	LF	LF	LF	LF	LF	EA	EA	EA	EA	EA	EA	EA	EA	EA	EA	EA	EA	LF	LF	LF	LF	LF	SY
620 Median Pond	–	468	–	–	–	–	1487	–	–	210	–	–	–	–	–	–	–	–	–	–	–	1	324	–	77	–	–	21
LakeCreek Pond 1A	–	–	–	–	–	–	–	–	–	–	–	–	–	–	–	–	–	–	–	–	–	–	144	25	100	–	–	–
LakeCreek Pond 1B	–	–	–	–	–	–	–	–	–	–	–	–	–	–	–	–	–	–	–	–	–	–	114	24	58	–	–	–
LakeCreek Pond 1C	–	–	–	–	–	–	–	–	–	–	–	–	–	–	–	–	–	–	–	–	–	–	120	25	14	–	–	–
Hymeadow Pond 2A	–	–	–	–	–	–	6	–	–	–	1	–	–	–	–	–	–	–	–	–	–	–	138	25	65	–	–	–
Hymeadow Pond 2B	–	–	–	–	–	–	–	–	–	–	–	–	–	–	–	–	–	–	–	–	–	–	63	25	11	–	–	–
Hymeadow Pond 2C	–	–	–	–	–	–	–	–	–	–	–	–	–	–	–	–	–	–	–	–	–	–	156	25	38	–	–	–
Hymeadow Pond 2D1	–	–	–	–	–	–	70	–	–	–	–	–	–	–	–	–	–	–	–	–	–	–	288	25	54	–	–	–
Hymeadow Pond 2D2	–	–	–	–	–	–	735	–	–	–	1	–	–	–	–	–	–	–	–	–	–	–	252	27	5	–	–	–
Pond Springs Pond	44	–	–	–	–	–	–	–	–	–	–	–	–	–	–	–	–	–	–	–	–	–	704	–	357	–	–	42
Pond Springs Detention Pond	–	–	96	–	81	84	–	136	287	563	2	3	1	3	–	2	2	–	–	1	–	–	–	–	–	–	90	30
Woods Pond	–	–	30	175	333	28	66	–	–	–	–	2	–	–	1	–	–	1	1	–	1	6	–	–	–	75	–	37
TOTAL	44	468	126	175	414	112	2364	136	287	773	4	5	1	3	1	2	2	1	1	1	1	7	2303	201	779	75	90	130

	ITEM 531	ITEM 550	ITEM 550	ITEM 550	ITEM 3116	ITEM 3116	ITEM 3116	ITEM 5014	ITEM 5014	ITEM 5014	ITEM 8608
	CONC. WALKWAY (5 IN)	CHAIN LINK FENCE (6FT)	VEH. GATE (DOUBLE) (12FT)	VEH. GATE (DOUBLE) (20FT)	ASPH CONC (TY C) (SURF) (PV 32 MIN)	ASPH CONC. (TY C) 2"	ASPH CONC. (TY C) 1½"	GABIONS (3'X1') (GALV)	GABIONS (3'X3') (GALV)	GABIONS (6'X0.5') (GALV)	SAND FILTER SYSTEM
	SY	LF	EA	EA	TONS	TONS	TONS	CY	CY	CY	EA
620 Median Pond	–	–	–	2	–	–	–	–	20	6.7	1 (60'X64')
LakeCreek Pond 1A	–	–	–	–	–	–	–	6.6	10	–	1 (29'X30')
LakeCreek Pond 1B	–	–	–	–	–	–	–	6.6	10	–	1 (24'X30')
LakeCreek Pond 1C	–	–	–	–	–	–	–	6.6	10	–	1 (25'X30')
Hymeadow Pond 2A	–	–	–	–	–	–	–	6.6	10	–	1 (28'X30')
Hymeadow Pond 2B	–	–	–	–	–	–	–	6.6	10	–	1 (15'X30')
Hymeadow Pond 2C	–	–	–	–	–	–	–	6.6	10	–	1 (29'X30')
Hymeadow Pond 2D1	–	–	–	–	–	–	–	6.6	10	–	1 (30'X37')
Hymeadow Pond 2D2	–	–	–	–	–	–	–	6.6	10	–	1 (30'X47')
Pond Springs Pond	–	1050	2	–	–	8.3	–	–	38	10.3	1 (40'X93')
Pond Springs Detention Pond	46	2060	1	–	12	4.1	7.7	–	–	–	–
Woods Pond	–	2010	1	–	–	56.2	–	–	–	–	–
TOTAL	46	5120	4	2	12	68.6	7.7	52.8	138	17.0	10

NOTES:

( ) INCIDENTAL. FOR CONTRACTOR'S INFORMATION ONLY.

* SUBSIDIARY TO VARIOUS BID ITEMS.

Turner Collie & Braden Inc.
ENGINEERS • PLANNERS • PROJECT MANAGERS

AUSTIN | Job No. 61-99100-012 | File

©1998 TxDOT

US 183
WATER QUALITY AND DETENTION POND SUMMARY SHEET

SCALE: AS NOTED

Designed	FED. RD. DIV. NO.	STATE	FEDERAL AID PROJECT NO.		HIGHWAY NO.
KKY	6	TEXAS	NH 09(556)		US 183
Drawn	STATE DIST. NO.	COUNTY	CONTROL NO.	SECTION NO.	JOB NO.	SHEET NO.
JAM	AUS	WILLIAMSON	0151	05	072	48
Checked						
DLG						

DATE: 04/10/99
JOB No.: 72-07401-022
PATH: t:\ 07401022\drainage\wqptbl2.dgn

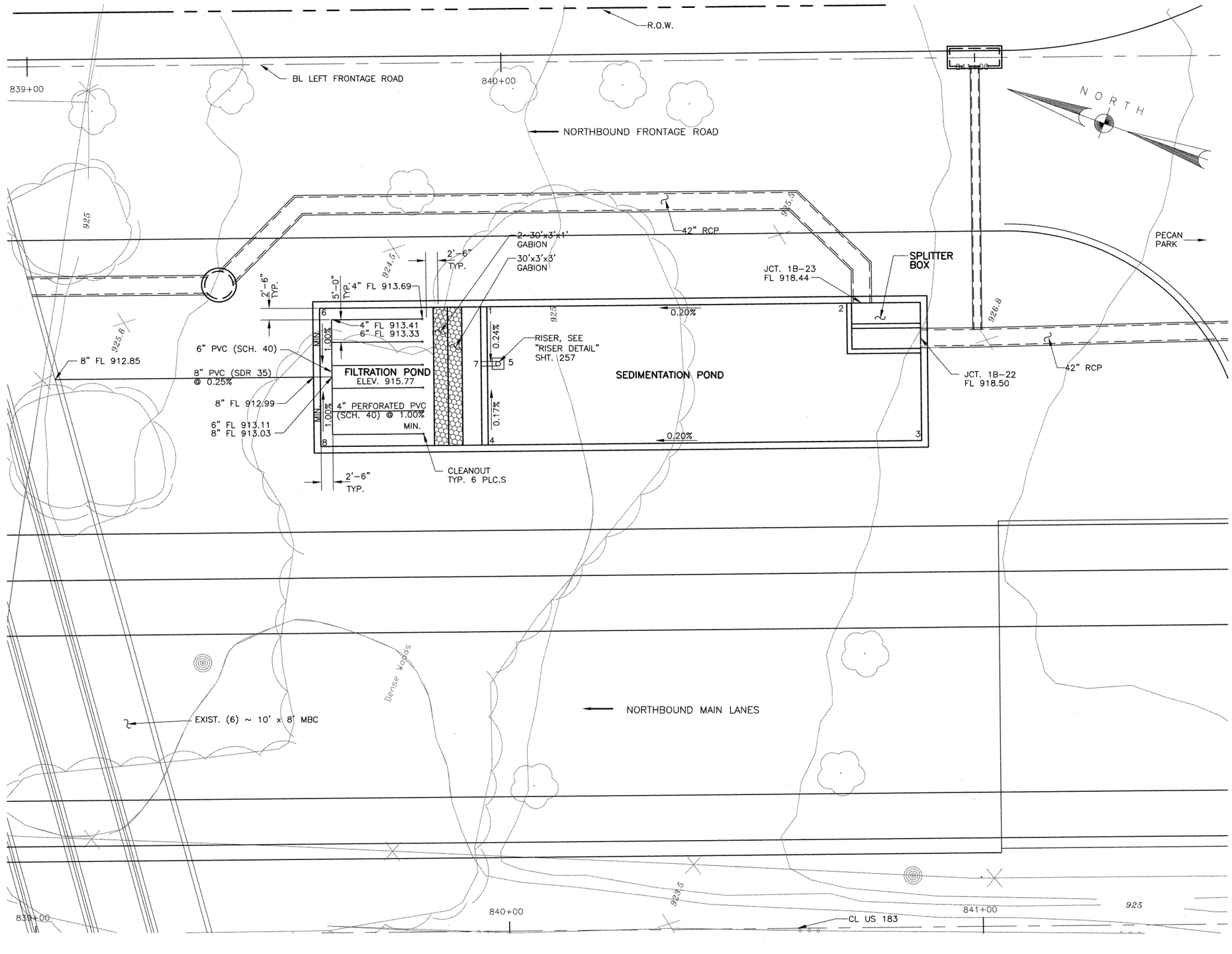

POINT LOCATION TABLE

POINT No.	STATION BL LT. FRT. RD.	OFFSET	ELEV. FL
1	839+96.50	52.75' RT.	915.82
2	840+72.50	52.75' RT.	915.97
3	840+88.00	82.75' RT.	916.00
4	839+96.50	82.75' RT.	915.82
5	839+98.75	65.17' RT.	915.79
6	839+61.17	52.75' RT.	915.77
7	839+95.17	65.17' RT.	915.77
8	839+61.17	82.75' RT.	915.77

NOTE:
FOR CURRENT INFORMATION ABOUT GRAVITY & FORCE MAINS, IN REFERENCE TO CHANGE ORDER #10, CONTACT CITY OF AUSTIN WATER & WASTEWATER DEPT

NOTES:

1. SEE WATER QUALITY POND STRUCTURAL DETAILS SHEETS 261a – 261b FOR POND DIMENSIONS AND REINFORCEMENT.
2. SEE STORM SEWER PROFILE SHEETS FOR FLOWLINES OF RCPs/RCBs AT SPLITTER BOX, SHT. 275.
3. SEE WATER QUALITY POND TYPICAL SECTIONS AND DETAILS SHEET 257 FOR FILTRATION POND DETAILS.

STATE OF TEXAS
REBECCA A. BILLS
82587
LICENSED PROFESSIONAL ENGINEER

Rebecca A. Bills
5-3-99

Turner Collie & Braden Inc.
ENGINEERS • PLANNERS • PROJECT MANAGERS

AUSTIN | Job No. 72-07401-022 | File

Texas Department of Transportation

© 1998 TxDOT

LAKECREEK (1B) UNDERGROUND WATER QUALITY POND LAYOUT

SCALE: 1"=10'

Designed	RAB	FED. RD. DIST. NO.	STATE	FEDERAL AID PROJECT NO.				HIGHWAY NO.
Checked	DLG	6	TEXAS	NH 99(556)				U.S.183
Drawn	GWS	STATE DIST. NO.	COUNTY	CONTROL NO.	SECTION NO.	JOB NO.		SHEET NO.
Checked	DLG	14	WILLIAMSON	0151	05	072		250

DATE: 04/28/99
JOB NO.:72-07401-022/PONDS/HYMD1B.dwg

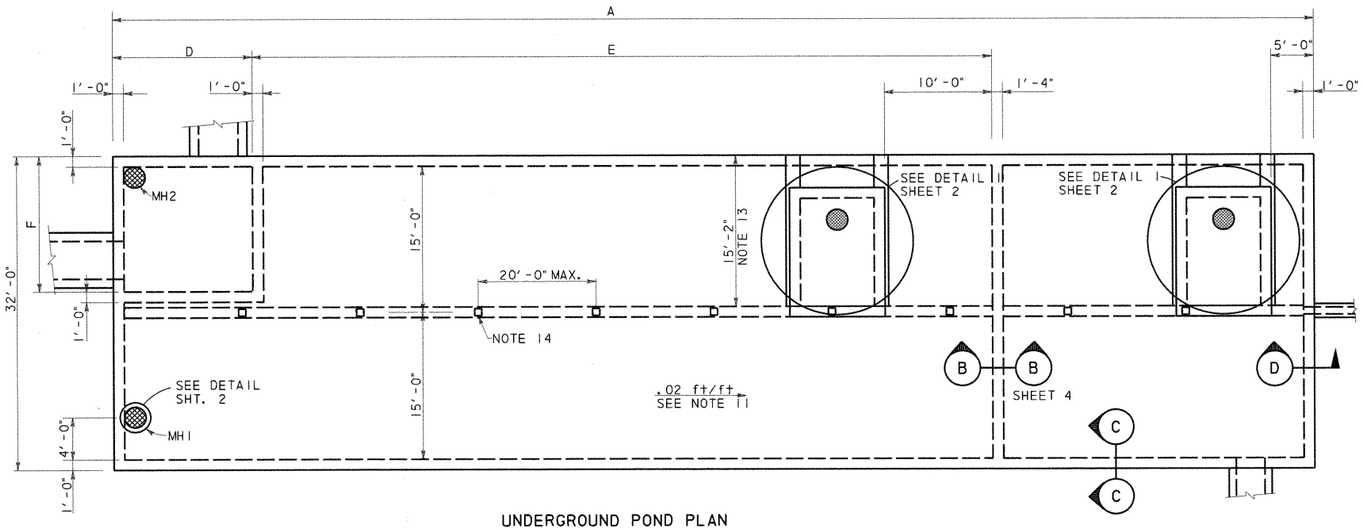

UNDERGROUND POND PLAN

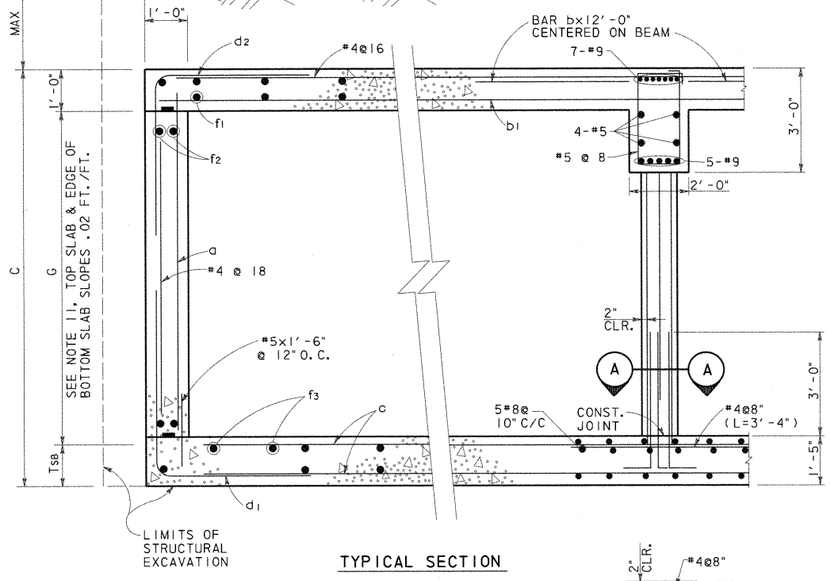

TYPICAL SECTION

SECTION C-C
N. T. S.

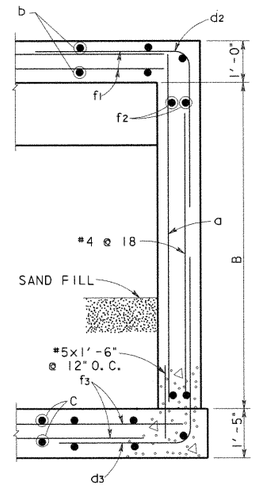

SECTION D-D
N. T. S.

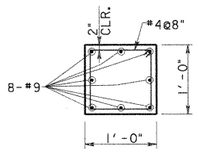

SECTION A-A
SCALE: 1"=1'-0"

UNDERGROUND POND REINFORCING TABLE																		
POND DESIGNATION	BARS a		BARS b		BARS b1		BARS c		BARS d1		BARS d2		BARS d3		BARS f1, f2, f3(#4)			
	SIZE	SPA.	SIZE	SPA.	SIZE	SPA.	SIZE	SPA.	SIZE	SPA.	SIZE	SPA.	SIZE	SPA.	f1 Spa.	f2 Spa.	f3 Spa.	
1A	#6	@12"	#8	@8"	#6	@8"	#8	@10"	#6	@6"	#6	@6"	#6	@6"	@6"	@12"	@7"	
1B	#6	@12"	#8	@8"	#6	@8"	#8	@10"	#6	@6"	#6	@6"	#6	@6"	@6"	@12"	@7"	
1C	#6	@12"	#8	@8"	#6	@8"	#8	@10"	#7	@6"	#6	@6"	#7	@6"	@6"	@12"	@7"	
2A	#6	@12"	#8	@8"	#6	@8"	#8	@10"	#6	@6"	#6	@6"	#6	@6"	@6"	@12"	@7"	
2B	#6	@12"	#8	@8"	#6	@8"	#8	@10"	#6	@6"	#6	@6"	#6	@6"	@6"	@12"	@7"	
2C	#7	@12"	#8	@8"	#6	@8"	#8	@10"	#7	@6"	#6	@6"	#8	@6"	@6"	@12"	@7"	
2D1	#7	@12"	#8	@8"	#6	@8"	#8	@10"	#7	@6"	#6	@6"	#8	@6"	@6"	@12"	@7"	
2D2	#7	@12"	#8	@8"	#6	@8"	#8	@10"	#7	@6"	#6	@6"	#8	@6"	@6"	@12"	@7"	

UNDERGROUND POND DIMENSION TABLE											
POND DESIGNATION	A	B	C	D	E	F	G			MAX FILL	AVERAGE FILL
1A	160'-4"	9'-2"	9'-3"	22'-0"	97'-0"	19'-0"	7'-0"			11'-0"	7'-6"
1B	128'-10"	9'-2"	9'-3"	15'-6"	77'-0"	11'-0"	7'-0"			8'-6"	5'-6"
1C	118'-10"	9'-8"	9'-9"	15'-6"	66'-0"	11'-0"	7'-6"			8'-3"	5'-6"
2A	147'-10"	9'-2"	9'-3"	15'-6"	92'-0"	11'-0"	7'-0"			9'-3"	6'-9"
2B	86'-10"	9'-2"	9'-3"	15'-6"	44'-0"	11'-0"	7'-0"			6'-9"	4'-9"
2C	133'-10"	10'-2"	10'-3"	15'-6"	77'-0"	11'-0"	8'-0"			4'-9"	3'-6"
2D1	181'-4"	10'-2"	10'-3"	22'-0"	110'-0"	13'-0"	8'-0"			11'-10"	7'-3"
2D2	211'-4"	10'-2"	10'-3"	13'-0"	139'-0"	22'-0"	8'-0"			9'-5"	7'-9"

GENERAL NOTES: UNDERGROUND PONDS

1. DESIGNED ACCORDING TO CURRENT AASHTO 1996 STANDARD SPECIFICATIONS.
2. DESIGNED FOR HS20 LOADING AND TO THE MAXIMUM FILL HEIGHT SHOWN.
3. ALL REINFORCING SHALL BE GRADE 60 KSI.
4. ALL CONCRETE SHALL BE CLASS "C".
5. REINFORCING BARS SHALL BE ADJUSTED TO PROVIDE A MINIMUM OF 1½" CLEAR COVER, UNLESS OTHERWISE NOTED.
6. ALL DIMENSIONS ARE IN FEET AND INCHES AND ALL MASS IS IN POUNDS UNLESS OTHERWISE NOTED.
7. SEE POND LAYOUT SHEETS FOR POND ORIENTATION AND LOCATION; PLUS THE ORIENTATION, SIZE AND LOCATION OF INCOMING AND OUTGOING DRAINAGE LINES.
8. WATERSTOPS SHALL BE HYDROPHILIC WATERSTOPS SUCH AS ADEKA MC-2010M.
9. PROVIDE 3" CLEARANCE WHERE CAST AGAINST SOIL.
10. PROVIDE CONSTRUCTION JOINTS IN WALLS AT A MAXIMUM SPACING OF 30 FOOT ON CENTER. MAXIMUM SLAB AREA TO BE PLACED WITHOUT CONSTRUCTION JOINTS IS 3000 SQUARE FEET. SLAB AND WALL CONSTRUCTION JOINTS SHALL ALIGN.
11. SEE POND LAYOUT FOR FLOWLINE. BOTTOM SLAB SHALL PROVIDE A .02 FT/FT SLOPE ALONG THE EDGE OF WALL. PERIMETER WALL HEIGHT (G) SHALL BE CONSTANT.
12. OFF SET RISER TO MISS ROOF SLAB BEAM.
13. AT UNDERGROUND PONDS 2C AND 2D2 THE ACCESS HATCH IS OPPOSITE HAND FROM WHAT IS SHOWN AND IS LOCATED FROM THE OPPOSITE WALL TO AVOID INTERFERENCE WITH THE DRAINAGE DITCH.
14. COLUMN SPACING IS 20.0 FT O.C. MAX. UNLESS NOTED OTHERWISE. THERE WILL BE NO COLUMNS WITHIN THE SPLITTER BOX, WHERE SPLITTER BOX EXTENDS TO THE ROOF BEAM OR BEYOND THE BEAM IS SUPPORTED BY THE SPLITTER BOX WALLS.
15. LAP TOP BARS @ MID SPAN AND BOTTOM BARS @ SUPPORTS.

ESTIMATED QUANTITIES*			
POND DESIGNATION	CONCRETE (CY)	REINFORCING BARS (LBS)	EXCAVATION (CY)
1A	623	144,925	
1B	505	115,855	
1C	476	109,213	
2A	572	131,682	
2B	356	82,752	
2C	536	123,427	
2D1	712	165,990	
2D2	823	191,615	

* QUANTITIES FOR CONTRACTOR'S ESTIMATE ONLY. ALL ITEMS ARE SUBSIDIERY TO THE POND ITEM.

STATE OF TEXAS
WILLY R. BURNS
44162
REGISTERED
ENGINEER
4/2/99

NO. DATE REVISION APPROVED

Turner Collie & Braden Inc.
Engineers • Planners • Project Managers

DATE SUTTON JOB NO. 62-14004-011 ADDENDUM

© 1998 Texas Department of Transportation

US 183

WATER QUALITY PONDS
STRUCTURAL DETAILS

SHEET 1 OF 11

Designed	WRB	FED. RD. DIV. NO.	STATE	FEDERAL AID PROJECT NO.				HIGHWAY NO.
Checked		6	TEXAS	NH99(556)				US 183
Drawn	MR	STATE DIST. NO.	COUNTY	CONTROL NO.	SECTION NO.	JOB NO.		SHEET NO.
Checked		14	WILLIAMSON	151	5	072		261a

UGPDTL1.DGN

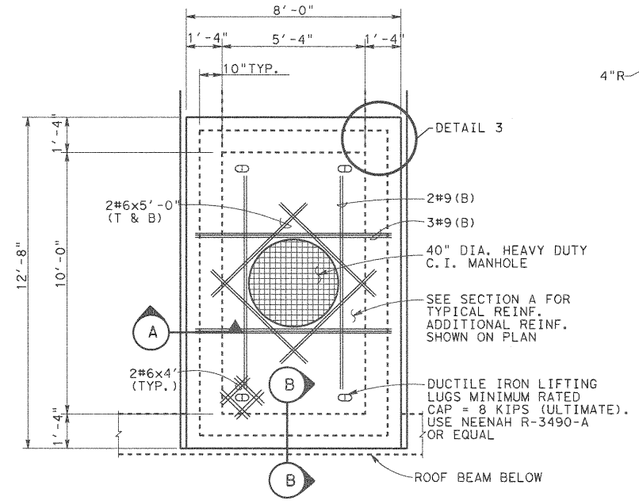

MAINTENANCE ACCESS HATCH

DETAIL 1

SCALE: 3/8" = 1'-0"

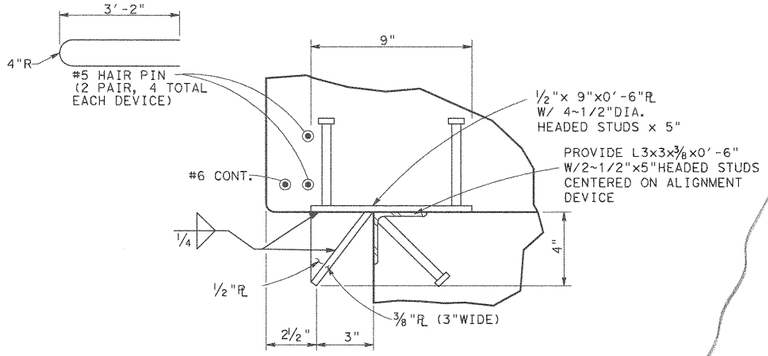

PROVIDE 8 DEVICES (GALV. AFTER FABRICATION) 2 EACH SIDE

DETAIL 2

ALIGNMENT DEVICE

SCALE: 3" = 1'-0"

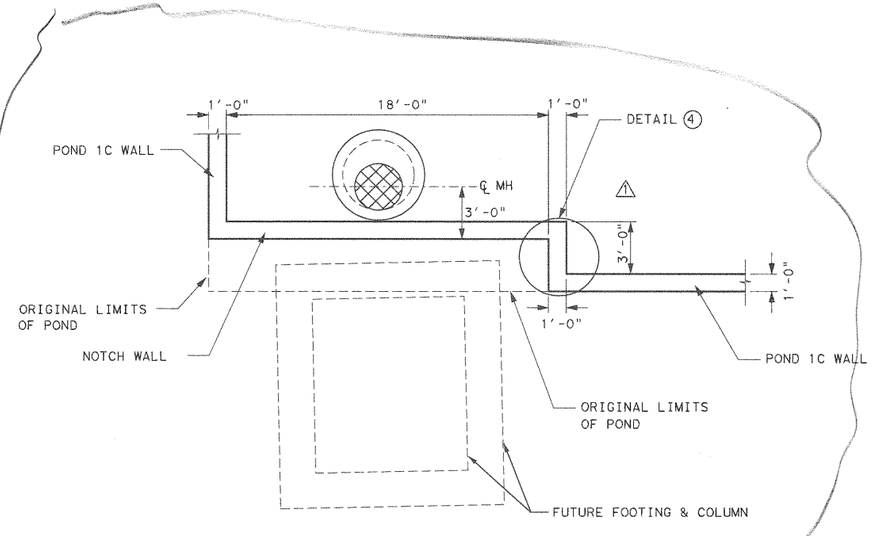

POND 1C MODIFICATION

SCALE: 3" = 1'-0"

SECTION A

SCALE: 1/2" = 1'-0"

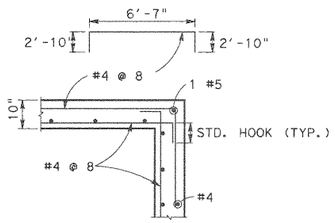

DETAIL 3

HORIZONTAL REINFORCEMENT

SCALE: 1/2" = 1'-0"

ACCESS HATCH		
POND	H1 (±)	ELEV. A
1A	8'-8"	929.20
1B	6'-7"	931.98
1C	6'-7"	931.62
2A	8'-4"	932.04
2B	5'-10"	932.20
2C	4'-10"	933.06
2D1	7'-4"	934.04
2D2	7'-11"	932.50

MANHOLE TABLE		
POND	H2	H3
1A	9'-0"	5'-0"
1B	9'-0"	4'-0"
1C	8'-0"	4'-0"
2A	9'-0"	4'-0"
2B	7'-0"	4'-0"
2C	3'-0"	5'-0"
2D1	10'-0"	4'-0"
2D2	7'-0"	5'-0"

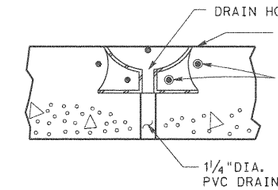

SECTION B

SCALE: 1"= 1'-0"

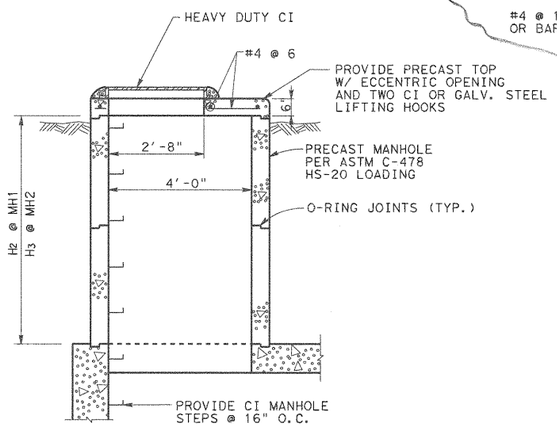

MANHOLE DETAIL

SCALE: 1/2" = 1'-0"

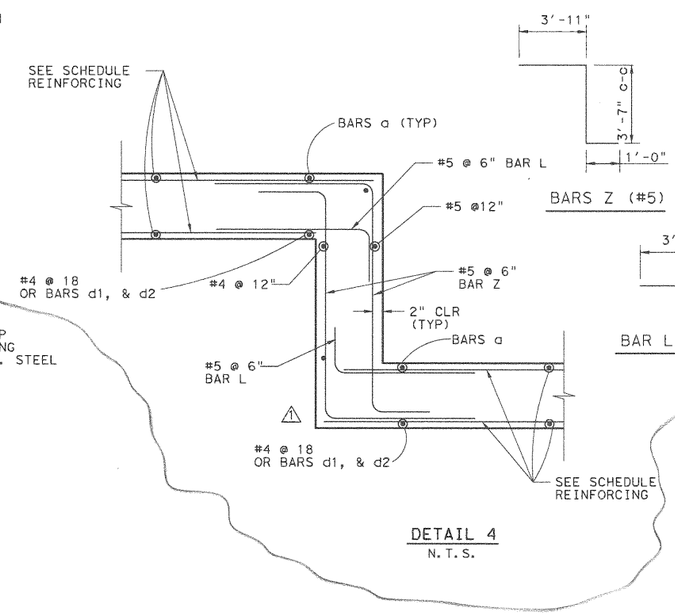

DETAIL 4

N.T.S.

STATE OF TEXAS
WALLY R. BURNS
44162
REGISTERED PROFESSIONAL ENGINEER
Wally R Burns
01/29/01

1	JAN. 26 01	ADD NOTCH	WRB
NO.	DATE	REVISION	APPROVED

Turner Collie & Braden Inc.
Engineers • Planners • Project Managers

TRANSPORTATION | Unit | Job No. 81-07401-024 | Approved

© 1998 Texas Department of Transportation

US 183
WATER QUALITY PONDS
STRUCTURAL DETAILS

SCALE: AS NOTED — SHEET 2 OF 11

Designed	Checked	Drawn	Checked	FED. RD. DIV. NO.	STATE	FEDERAL AID PROJECT NO.				HIGHWAY NO.
WRB		MR		6	TEXAS	NH99(556)				US 183
				STATE DIST. NO.	COUNTY	CONTROL NO.	SECTION NO.	JOB NO.		SHEET NO.
				14	WILLIAMSON	151	5	072		261b

UGPDT2.DGN

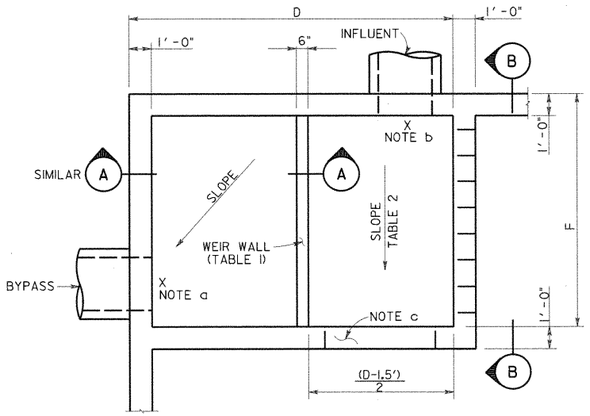

SEE TABLE SHEET I OF II
FOR DIMENSIONS D & F

SPLITTER BOX PLAN (POND 2D2)

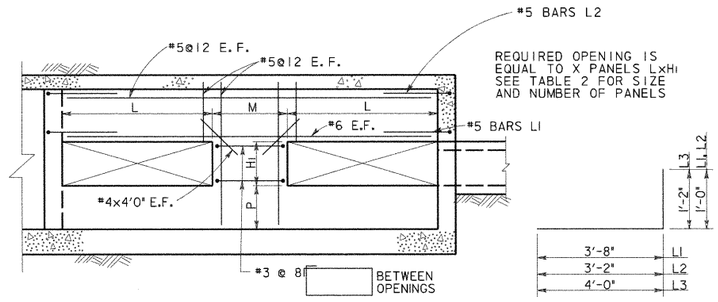

SECTION B

BARS L

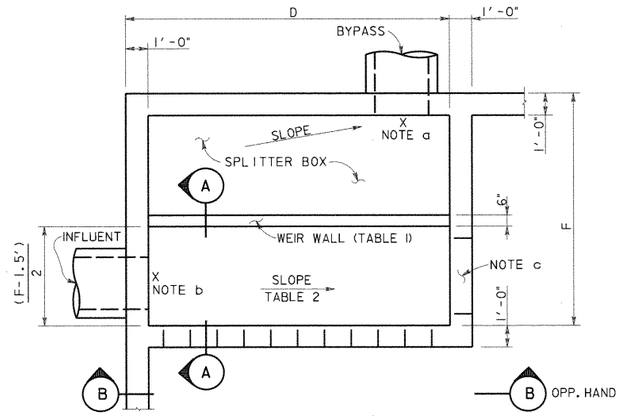

SEE TABLE SHEET I OF II
FOR DIMENSIONS D & F

SPLITTER BOX PLAN (TYPICAL)

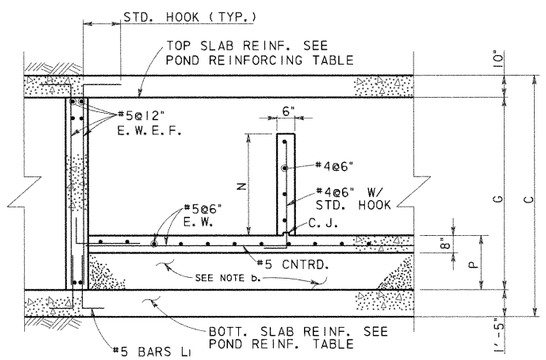

SECTION A

TABLE I BYPASS OUTFALL				
POND	BYPASS LINE ELEVATION	BYPASS WEIR		
		TOP OF WALL ELEV.	N*	P
1A	914.23	917.78	3'-6"	1'-6"
1B	918.44	921.00	2'-6"	2'-6"
1C	918.39	922.75	4'-3"	1'-9"
2A	917.38	920.92	3'-6"	1'-6"
2B	921.92	923.49	1'-6"	3'-6"
2C	923.82	925.90	2'-0"	4'-6"
2D1	920.53	923.63	3'-0"	2'-6"
2D2	916.71	921.85	5'-0"	1'-0"

*N IS MINIMUM DIMENSION, SPLITTER BOX FLOOR SLOPES, HOLD TOP OF WEIR WALL CONSTANT.

TABLE 2 INFLUENT LINE						
POND	INFLUENT ELEV.	SLOPE %	INFLUENT WALL			
			OPENINGS X	M	L	HI
1A	914.28	0.29	4	3'-0"	3'-0"	2'-6"
1B	918.50	0.48	3	2'-9"	3'-0"	1'-6"
1C	918.50	0.85	3	2'-9"	3'-0"	1'-6"
2A	917.42	0.33	3	2'-9"	3'-0"	1'-6"
2B	921.99	0.54	1	0	14'-8"	0'-9"
2C	923.90	0.62	3	2'-9"	3'-0"	1'-0"
2D1	920.63	0.53	3	6'-0"	3'-0"	2'-0"
2D2	916.85	0.78	4	3'-8"	2'-6"	2'-0"

NOTES:

a. SEE TABLE I THIS SHEET FOR OUT FLOW ELEVATION. SLOPE SLAB FROM OVERFLOW WEIR TO OUTFALL.

b. SEE TABLE 2 FOR INFLUENT ELEVATION. TOP OF SPLITTER BOX SLAB TO MATCH INFLOW ELEVATION. AT POND 2D1 THE ELEVATION SHOWN REPRESENTS A 6" DROP FROM THE INFLUENT FLOWLINE. CONTRACTOR MAY USE CEMENT STABILIZED SAND UNDER THE SLAB OR PLACE CONCRETE FOR THE FILL.

c. PROVIDE 3'x .75' OPENING AT BOTTOM OF SPLITTER BOX WALL AT END OF CHANNEL.

STATE OF TEXAS
WILLY R. BURNS
54103
REGISTERED
PROFESSIONAL ENGINEER
4/28/99

NO.	DATE	REVISION	APPROVED

Turner Collie & Braden Inc.
Engineers • Planners • Project Managers

SUTTON — Job No. 62-14004-011

© 1998 Texas Department of Transportation

US 183
WATER QUALITY PONDS
STRUCTURAL DETAILS

SCALE: AS NOTED — SHEET 3 OF 11

Designed	WRB	FED. RD. DIV. NO.	STATE	FEDERAL AID PROJECT NO.				HIGHWAY NO.
Checked		6	TEXAS	NH99(556)				US 183
Drawn	MR	STATE DIST. NO.	COUNTY	CONTROL NO.	SECTION NO.	JOB NO.		SHEET NO.
Checked		14	WILLIAMSON	151	5	072		261c

UGPDT3.DGN

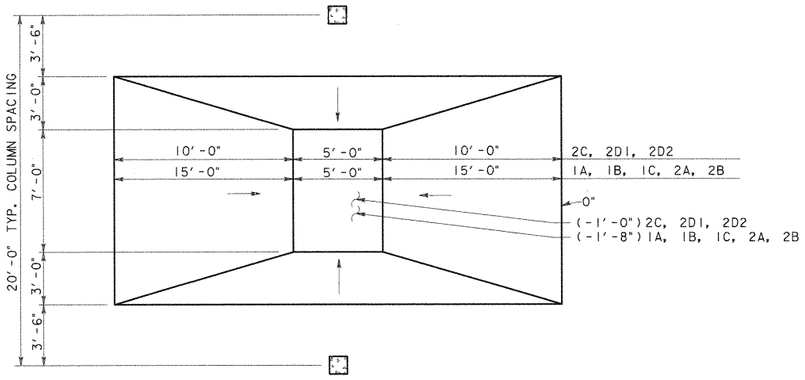

PLAN

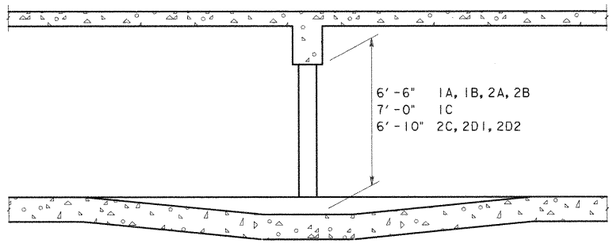

SECTION

REINFORCING LAP SPLICE & EMBEDMENT SCHEDULE						
BAR SIZE	MIN LAP LENGTH		MIN EMBEDMENT LENGTH			
	TOP BARS	OTHER BARS	TOP BARS		OTHER BARS	
			STR.	STD. HOOK	STR.	STD. HOOK
4	24"	20"	17"	9"	12"	7"
5	30"	24"	21"	10"	15"	8"
6	36"	28"	25"	10"	18"	8"
8	58"	41"	42"	15"	30"	12"

PROVIDE ONE CROSS OVER DETAIL FOR E ≤ 80'
PROVIDE TWO CROSS OVER DETAILS FOR E > 80'

CROSS OVER DETAIL
SCALE: 1/4" = 1'-0"

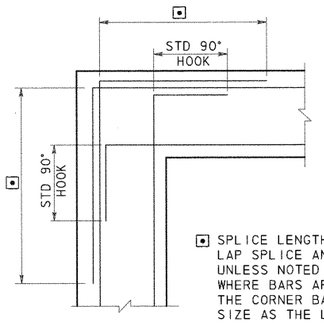

⊡ SPLICE LENGTH SEE REINFORCING LAP SPLICE AND EMBEDMENT TABLES. UNLESS NOTED OTHERWISE ON DWGS WHERE BARS ARE DIFFERENT SIZE THE CORNER BAR SHALL BE SAME SIZE AS THE LARGER BAR

CORNER REINFORCING
FOR WALLS OR GRADE BEAMS

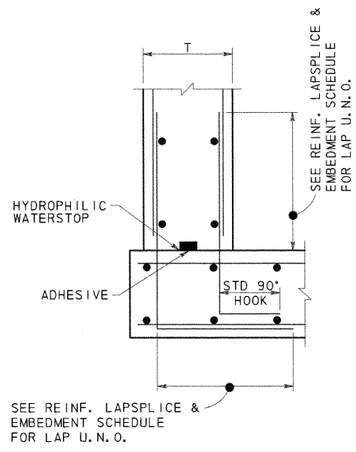

CONSTRUCTION JOINT
BASE OF WALLS

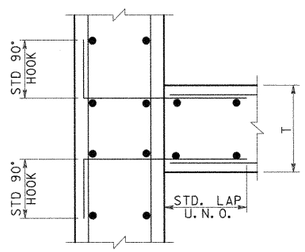

CONSTRUCTION JOINT
WALL INTERSECTIONS

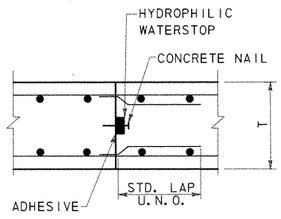

CONSTRUCTION JOINT
SLABS

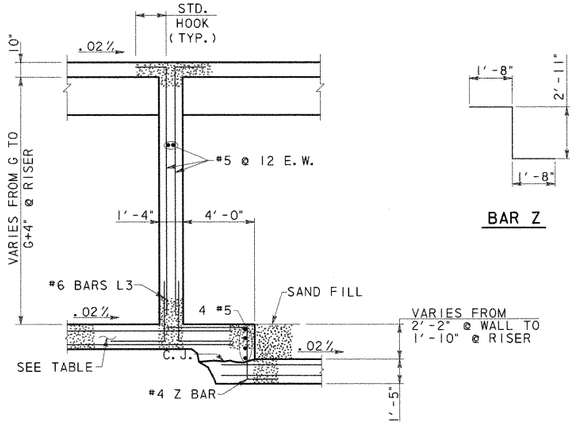

SECTION B

BAR Z

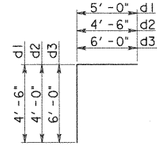

BARS D

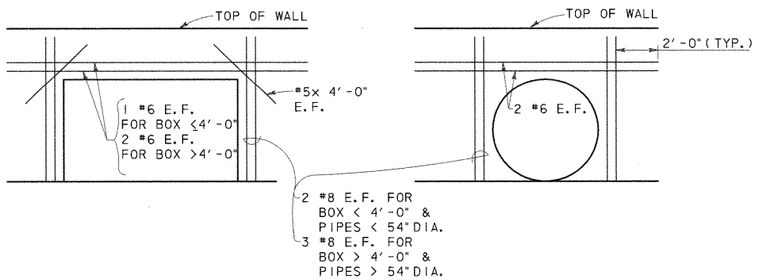

ADDITIONAL REINFORCING @ OPENINGS



NO.	DATE	REVISION	APPROVED

Turner Collie & Braden Inc.
Engineers • Planners • Project Managers

DATE: SUTTON | JOB NO. 62-14004-011 | APPROVED

© 1998 Texas Department of Transportation

US 183
WATER QUALITY PONDS
STRUCTURAL DETAILS

SCALE: AS NOTED | SHEET 4 OF 11

DESIGNED	CHECKED	DRAWN	CHECKED	FED. RD. DIV. NO.	STATE DIST. NO.	STATE	COUNTY	FEDERAL AID PROJECT NO. CONTROL NO.	SECTION NO.	JOB NO.	SHEET NO.	HIGHWAY NO.
WRB		MR		6	14	TEXAS	WILLIAMSON	NH99(556) 151	5	072	261d	US 183

UGPDT4.DGN

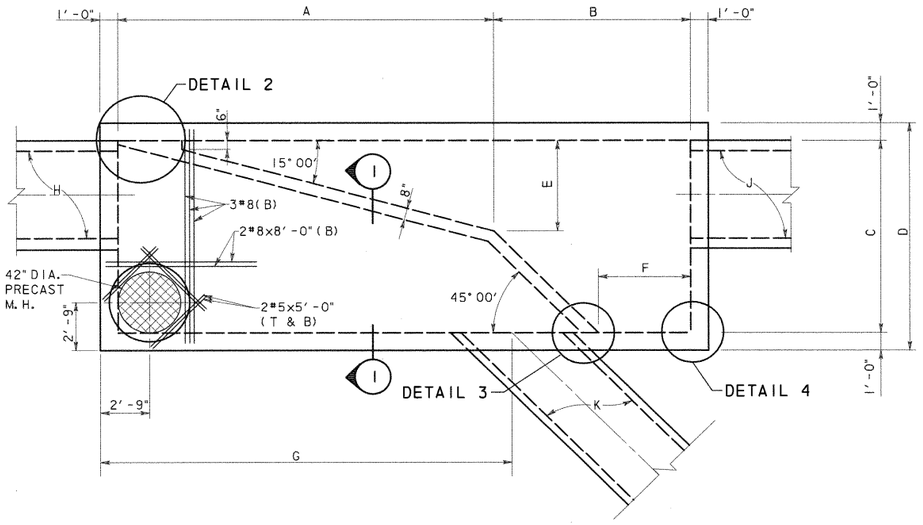

SPLITTER BOX DIMENSION TABLE

BOX LOCATION	A	B	C	D	E	F	G	H	J	K
POND SPRINGS	21'-0"	11'-0"	11'-0"	13'-0"	5'-2"	5'-2"	22'-0"	6x5 RCB	6x5 RCB	4x4 RCB
620 LEFT SIDE	13'-9"	8'-9"	8'-0"	10'-0"	3'-2"	4'-1"	13'-7"	*48" RCP	4x4 RCB	48" RCP

*48" RCP @ 15° SKEW
SEE DRAINAGE DETAIL SHEET.

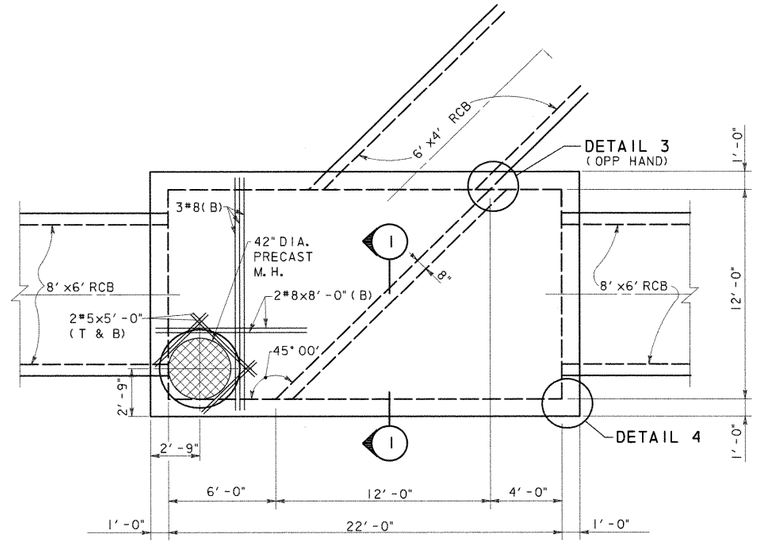

620 RIGHT SIDE
PLAN VIEW
SCALE: 1/4" = 1'-0"

ESTIMATED QUANTITIES			
BOX	CONCRETE (YD^3) *	REINFORCING (LBS) *	STRUCTURAL EXCAVATION (YD)
POND SPRINGS	56.8	7,964	
620 LEFT	32.5	4,096	
620 RIGHT	48.8	5,877	

* QUANTITIES FOR CONTRACTOR'S ESTIMATE ONLY. ALL ITEMS ARE SUBSIDIARY TO THE SPLITTER BOX.

PLAN VIEW
SCALE: 1/4" = 1'-0"

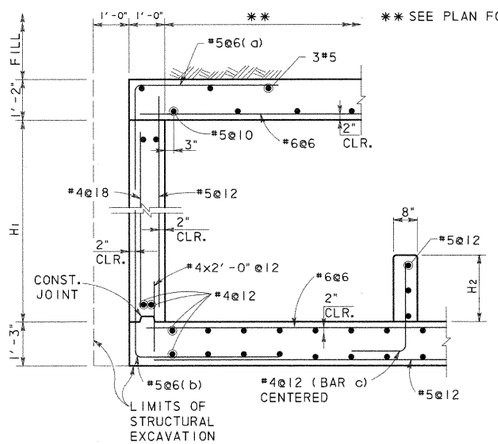

SECTION 1
SCALE: 1/2" = 1'-0"

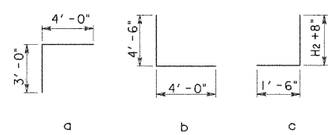

BOX LOCATION	H1	H2
POND SPRINGS	5'-6"	3'-0 1/2"
620 LEFT SIDE	4'-6"	2'-6"
620 RIGHT SIDE	6'-8"	1'-3"

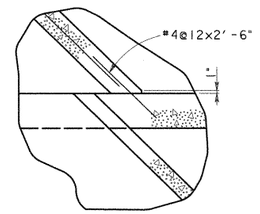

DETAIL 3
SCALE: 1/2" = 1'-0"

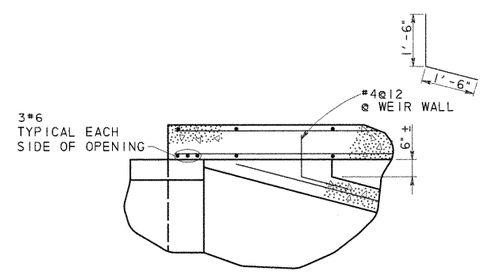

DETAIL 2
SCALE: 1/2" = 1'-0"

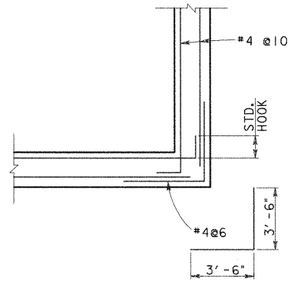

DETAIL 4
SCALE: 1/2" = 1'-0"

GENERAL NOTES:

1. DESIGNED ACCORDING TO CURRENT AASHTO 1996 STANDARD SPECIFICATIONS.
2. DESIGNED FOR HS20 LOADING AND TO THE MAXIMUM FILL HEIGHT SHOWN.
3. ALL REINFORCING SHALL BE GRADE 60 KSI.
4. ALL CONCRETE SHALL BE CLASS "C".
5. ALL DIMENSIONS ARE IN FEET AND INCHES AND ALL MASS IS IN POUNDS UNLESS OTHERWISE NOTED.



NO.	DATE	REVISION	APPROVED

Turner Collie & Braden Inc.
Engineers • Planners • Project Managers

DATE: SUTTON | JOB NO. 62-14004-011 | APPROVED

© 1998 Texas Department of Transportation

US 183
WATER QUALITY PONDS
STRUCTURAL DETAILS

SCALE: AS NOTED | SHEET 6 OF 11

Designed	WRB	FED. RD. DIV. NO.	STATE	FEDERAL AID PROJECT NO.				HIGHWAY NO.
Checked		6	TEXAS	NH99(556)				US 183
Drawn	MR	STATE DIST. NO.	COUNTY	CONTROL NO.	SECTION NO.	JOB NO.		SHEET NO.
Checked		14	WILLIAMSON	151	5	072		261f

UGPDT6.DGN

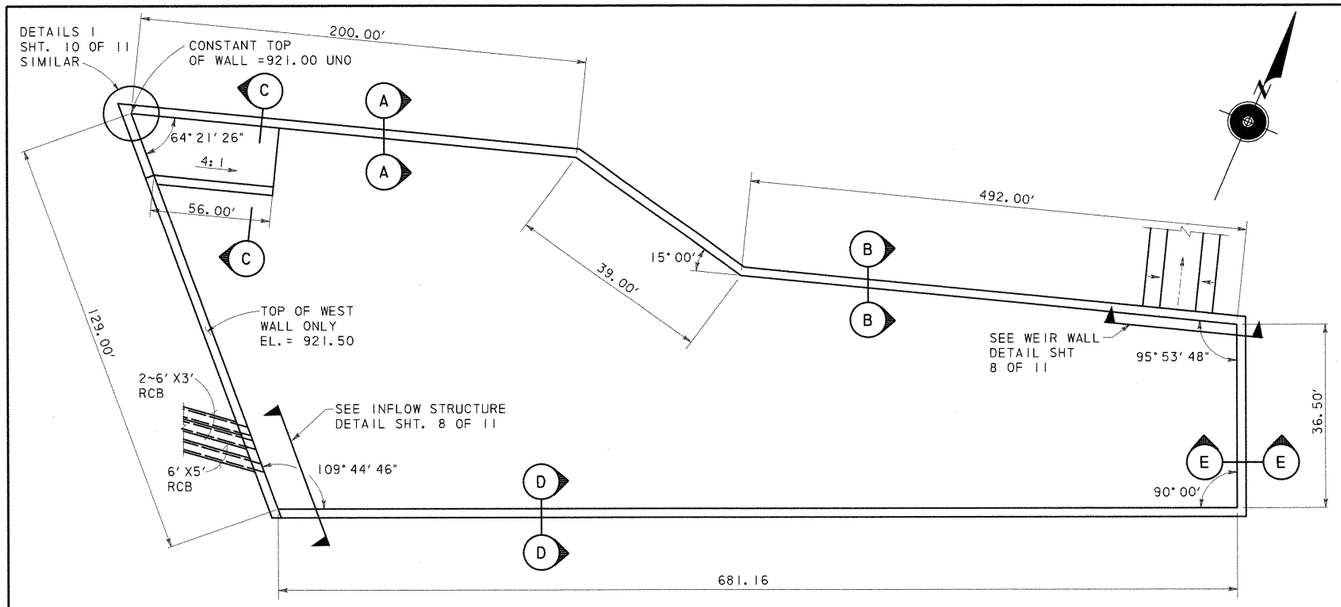

SYSTEM 3 DETENTION POND PLAN

ESTIMATED QUANTITIES (SECTION A)		
CONCRETE (YD^3) *	REINFORCING (LBS) *	** SQ. FT.
2,626	771,900	24,431

* QUANTITIES FOR CONTRACTOR'S ESTIMATE ONLY.

** EXPOSED FACE

*** WALL REINFORCING FOR 32' PANEL (SECT. A)									
A1 ~ 26 #5 @ 15" c-c		A2 ~ 25 #6 @ 15" c-c		A3 ~ 25 #7 @ 15" c-c		A4 ~ 26 #9 @ 15" c-c		A5 ~ 25 #9 @ 15" c-c	
Lgth	lb	Lgth	lb	Lgth	lb	Lgth	lb	Lgth	lb
129	292	145	455	218	928	188	1384	118	837

*** ONE SIDE SHOWN, BARS A BOTH SIDES

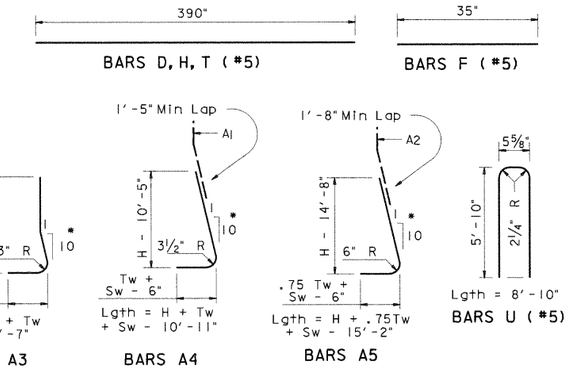

* A BARS ARE STRAIGHT IN FRONT FACE.

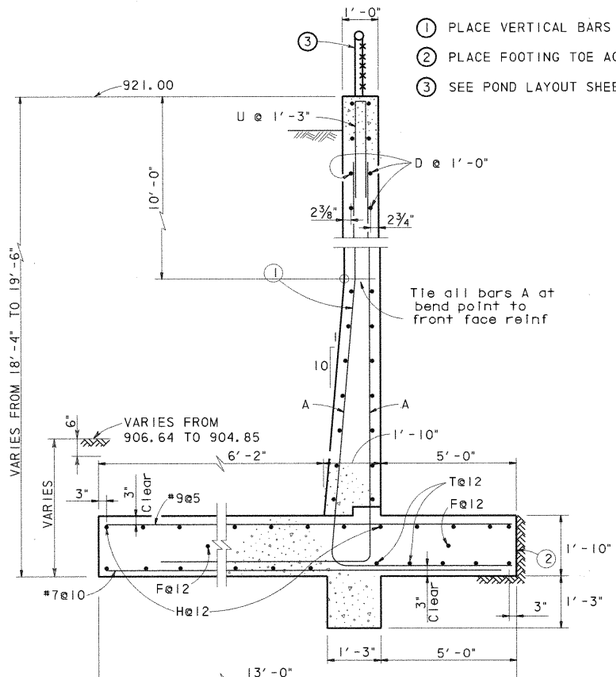

SECTION A-A
SCALE: ½" = 1'-0"

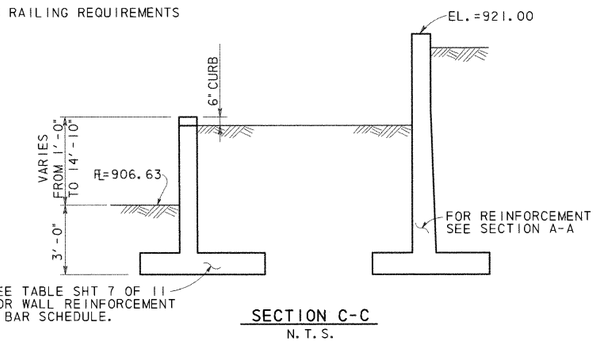

SECTION C-C
N.T.S.

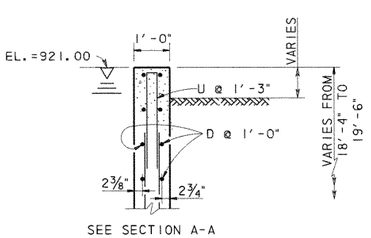

SEE SECTION A-A FOR REST OF DETAIL

SECTION D-D
SCALE: ½" = 1'-0"

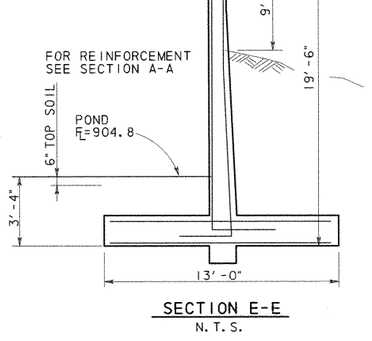

SECTION E-E
N.T.S.

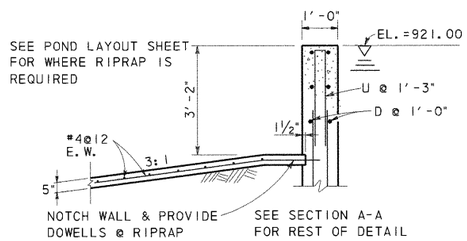

SECTION B-B
SCALE: ½" = 1'-0"

ELEVATION

GENERAL NOTES:

1. DESIGNED ACCORDING TO CURRENT AASHTO 1996 STANDARD SPECIFICATIONS.
2. DESIGNED FOR HS20 LOADING AND EQUIVALENT SOIL PRESSURE OF 60 PCF.
3. ALL REINFORCING SHALL BE GRADE 60 KSI.
4. ALL CONCRETE SHALL BE CLASS "A".
5. REINFORCING BARS SHALL BE ADJUSTED TO PROVIDE A MINIMUM OF 1½" CLEAR COVER.
6. ALL DIMENSIONS ARE IN FEET AND INCHES AND ALL MASS IS IN POUNDS UNLESS OTHERWISE NOTED.
7. CONSTRUCTION JOINT SHALL BE AT 32 FT. MAX. OC. PROVIDE CONSTRUCTION AT 15' MAX FROM EACH CORNER. CORNER CLOSURES SHALL BE PLACED LAST.
8. PROVIDE AN EXPANSION JOINT AFTER MAXIMUM OF 3 PANELS.
9. SEE SHEET 11 OF 11 FOR CONSTRUCTION AND EXPANSION JOINT DETAILS.

STATE OF TEXAS
WALLY R. BURNS
44162
REGISTERED PROFESSIONAL ENGINEER
4/28/99

NO.	DATE	REVISION	APPROVED

Turner Collie & Braden Inc.
Engineers • Planners • Project Managers

SUTTON | Job No. 62-14004-011 | Approved

© 1998 Texas Department of Transportation

US 183
WATER QUALITY PONDS
STRUCTURAL DETAILS

SCALE: AS NOTED | SHEET 7 OF 11

Designed	Checked	Drawn	Checked	FED. RD. DIV. NO.	STATE DIST. NO.	STATE	COUNTY	CONTROL NO.	SECTION NO.	JOB NO.	HIGHWAY NO. / SHEET NO.
WRB		MR		6	14	TEXAS	WILLIAMSON	151	5	072	US 183 / 261g

FEDERAL AID PROJECT NO. NH99(556)

UGPDT7.DGN

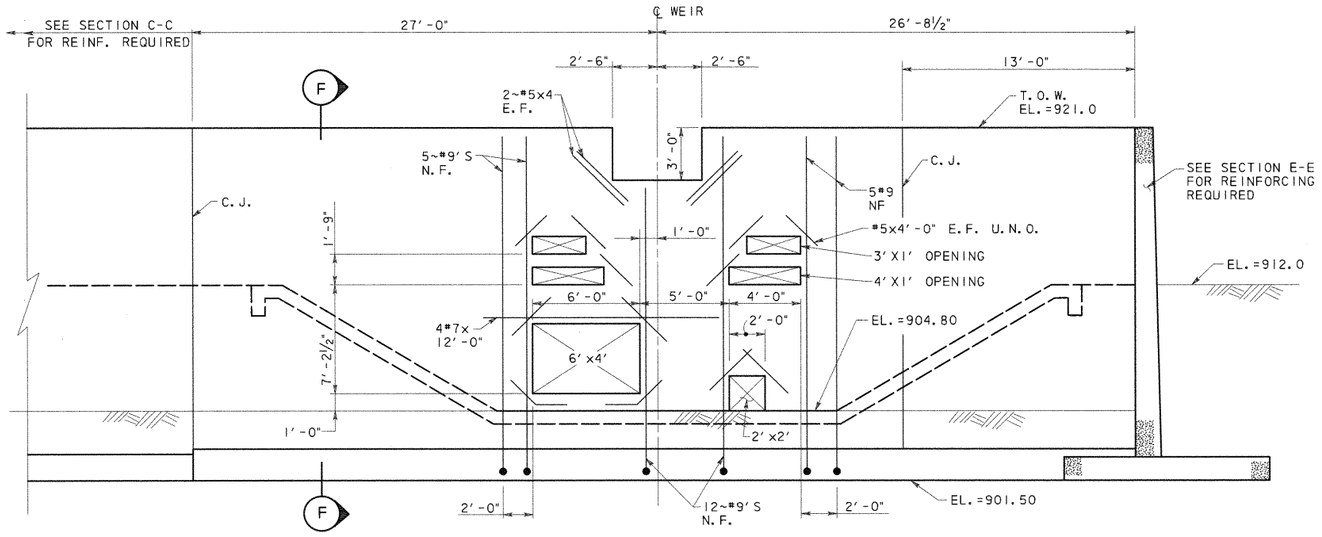

ADDITIONAL REINFORCING SHOWN, SEE SECTION F FOR TYPICAL REINF.

WEIR WALL DETAIL

SCALE: ¼" = 1'-0"

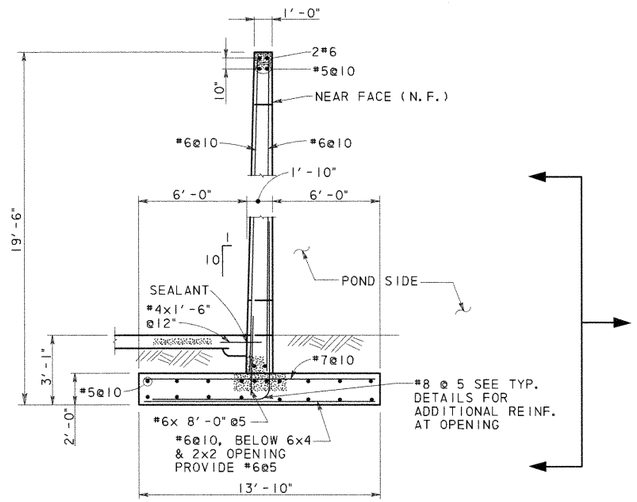

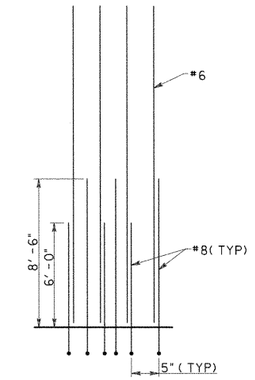

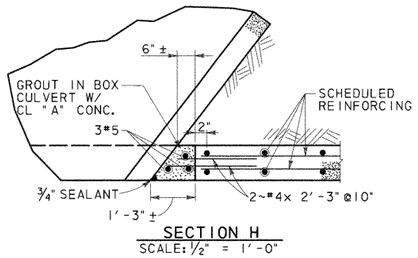

SECTION H

SCALE: ½" = 1'-0"

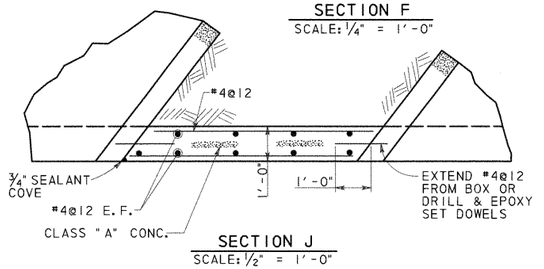

SECTION J

SCALE: ½" = 1'-0"

SECTION F

SCALE: ¼" = 1'-0"

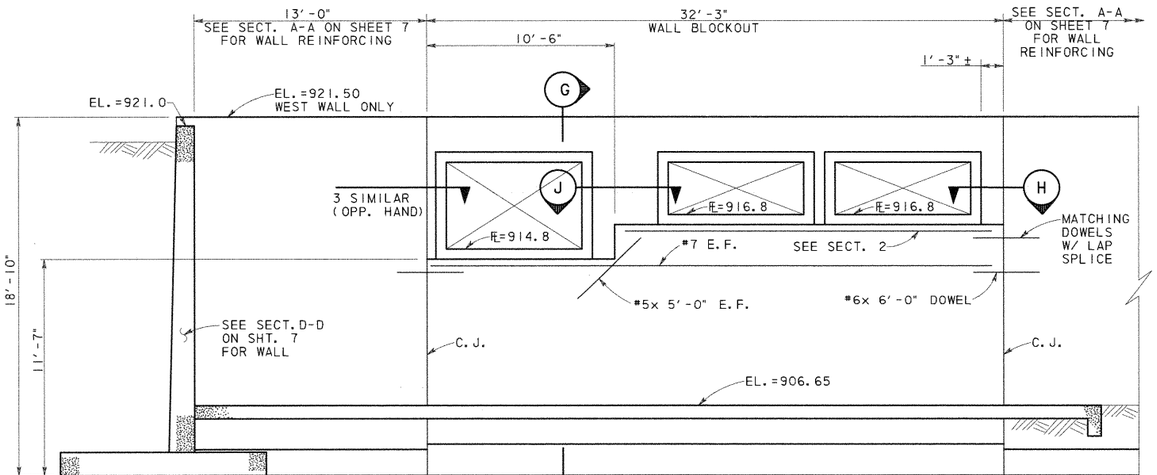

INFLOW STRUCTURE DETAIL

SCALE: ¼" = 1'-0"

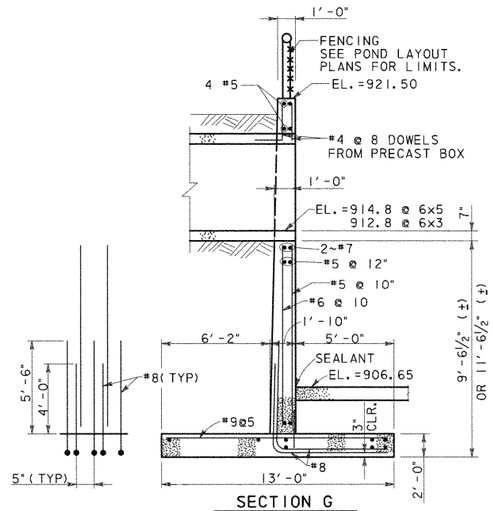

SECTION G

SCALE: ¼" = 1'-0"

STATE OF TEXAS · WALLY R. BURNS · 64262 · REGISTERED PROFESSIONAL ENGINEER

Wally R. Burns 4/28/99

NO.	DATE	REVISION	APPROVED

Turner Collie & Braden Inc.

Engineers • Planners • Project Managers

SUTTON | Job No. 62-14004-011 | Approved

© 1998 Texas Department of Transportation

US 183

WATER QUALITY PONDS STRUCTURAL DETAILS

SCALE: AS NOTED — SHEET 8 OF 11

Designed WRB	Fed. Rd. Div. No. 6	State TEXAS	Federal Aid Project No. NH99(556)	Highway No. US 183
Checked				
Drawn MR	State Dist. No. 14	County WILLIAMSON	Control No. 151	Section No. 5
Checked				Job No. 072

Sheet No. 261h

UGPDT8.DGN

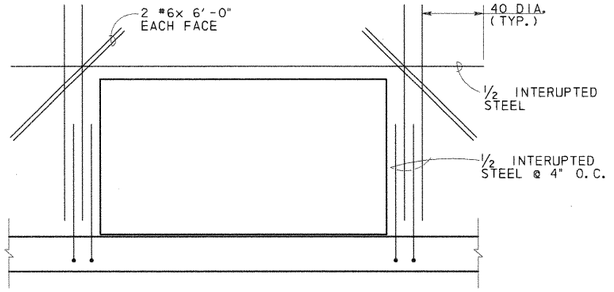

CULVERT OPENINGS

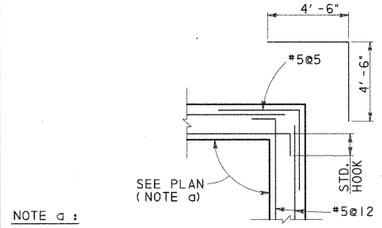

NOTE a :

SEE 620 MEDIAN POND (SHT. 5 OF 11), SYSTEM 3 POND (SHT. 7 OF 11)

DETAIL 1
SCALE: 1/2" = 1'-0"

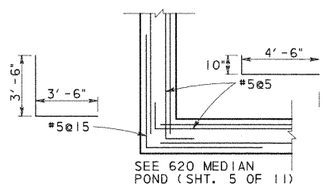

DETAIL 2
SCALE: 1/2" = 1'-0"

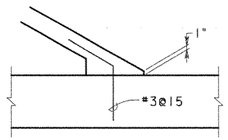

DETAIL 3
SCALE: 3/4" = 1'-0"

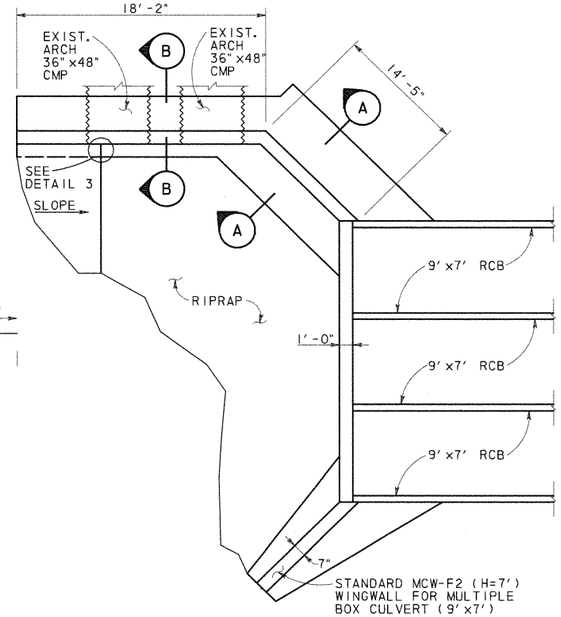

CULVERT @ POND SPRINGS PLAN
N. T. S.

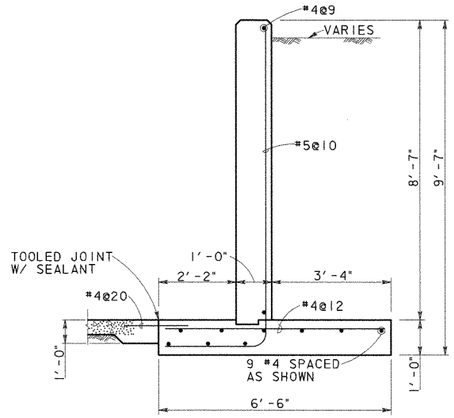

SECTION A-A
SCALE: 1/2" = 1'-0"

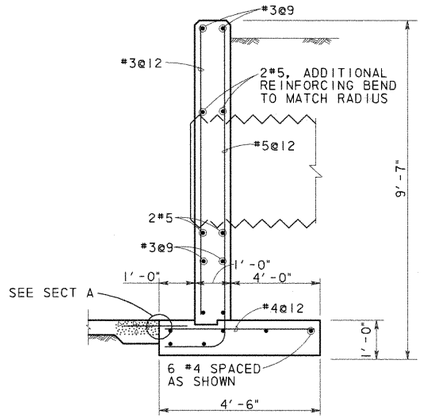

SECTION B-B
SCALE: 1/2" = 1'-0"

POND SPRINGS HEADWALL ESTIMATE QUANTITIES	
CONCRETE (YD^3) *	REINFORCING (LB) *
20.8	672

* QUANTITIES FOR CONTRACTOR'S INFORMATION ONLY. QUANTITIES SHOWN DO NOT INCLUDE THE .5 MCW-F2 WINGWALL OR THE CULVERT CURB.

THE HEADWALL SHALL BE PAID FOR AS MCW-F2(SPL).

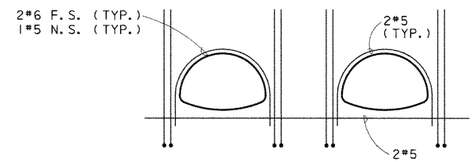

ADDITIONAL REINFORCMENT SHOWN. SEE SECTION B FOR TYPICAL

ELEVATION @ ARCH PIPE
N. T. S.

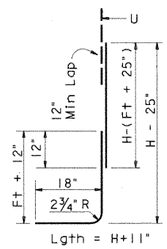

BARS B

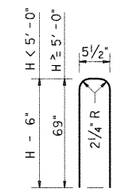

BARS U

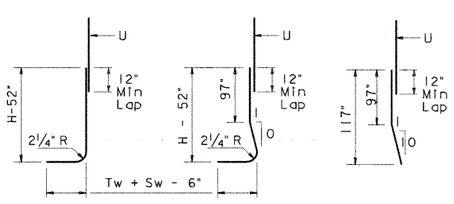

BARS A1

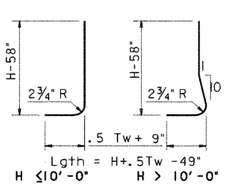

BARS A2

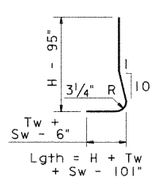

BARS A3

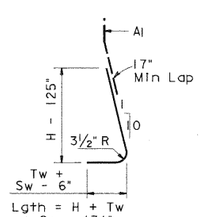

BARS A4

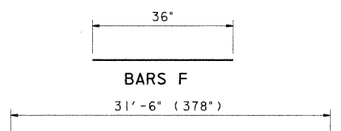

BARS D, H, T

BAR DETAILS POND SPRING

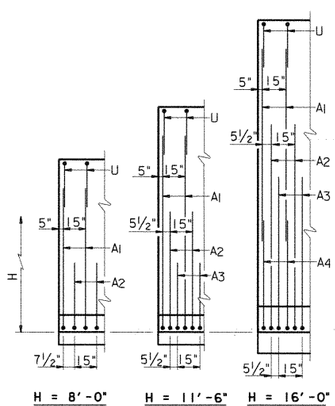

PARTIAL WALL ELEVATIONS
(Showing vertical reinforcing pattern in back face)

STATE OF TEXAS
WILLY R. BURNS
44162
REGISTERED
PROFESSIONAL ENGINEER
6/8/98

NO.	DATE	REVISION	APPROVED

Turner Collie & Braden Inc.
Engineers • Planners • Project Managers

TRANSPORTATION | Job No. 81-07401-024 | Approved

© 1998 Texas Department of Transportation

US 183
MISCELLANEOUS
WATER QUALITY PONDS
STRUCTURAL DETAILS

SCALE: AS NOTED | SHEET 10 OF 11

Designed	WRB	FED. RD. DIV. NO.	STATE	FEDERAL AID PROJECT NO.				HIGHWAY NO.
Checked		6	TEXAS	NH99(556)				US 183
Drawn	MR	STATE DIST. NO.	COUNTY	CONTROL NO.	SECTION NO.	JOB NO.		SHEET NO.
Checked		14	WILLIAMSON	151	5	072		261J

UGPDT10.DGN

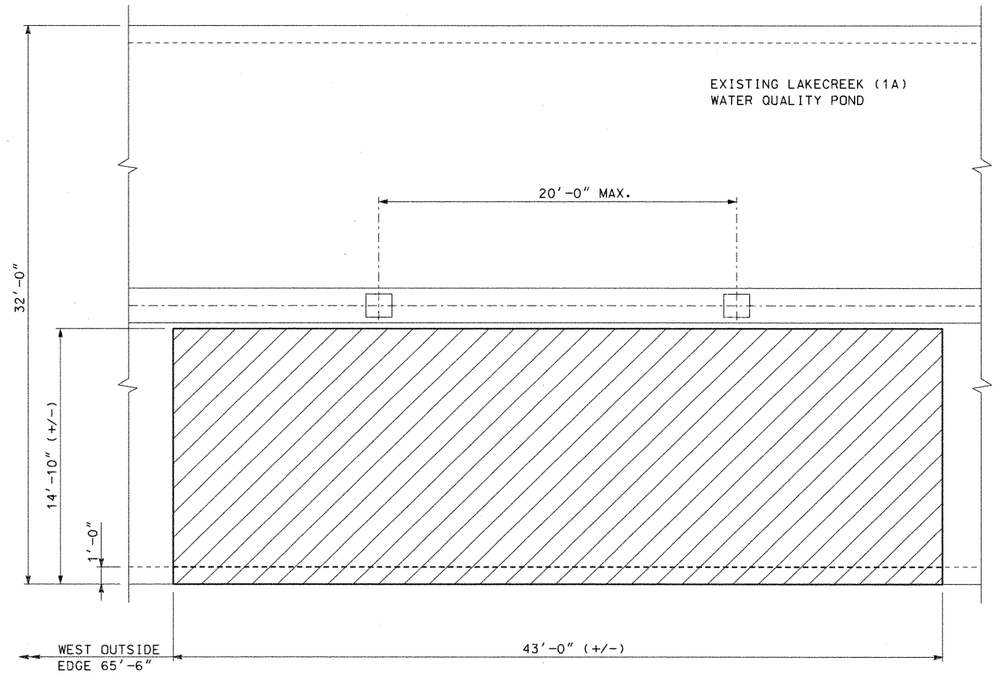

DEMOLITION PLAN
SCALE: 1/4" = 1'-0"

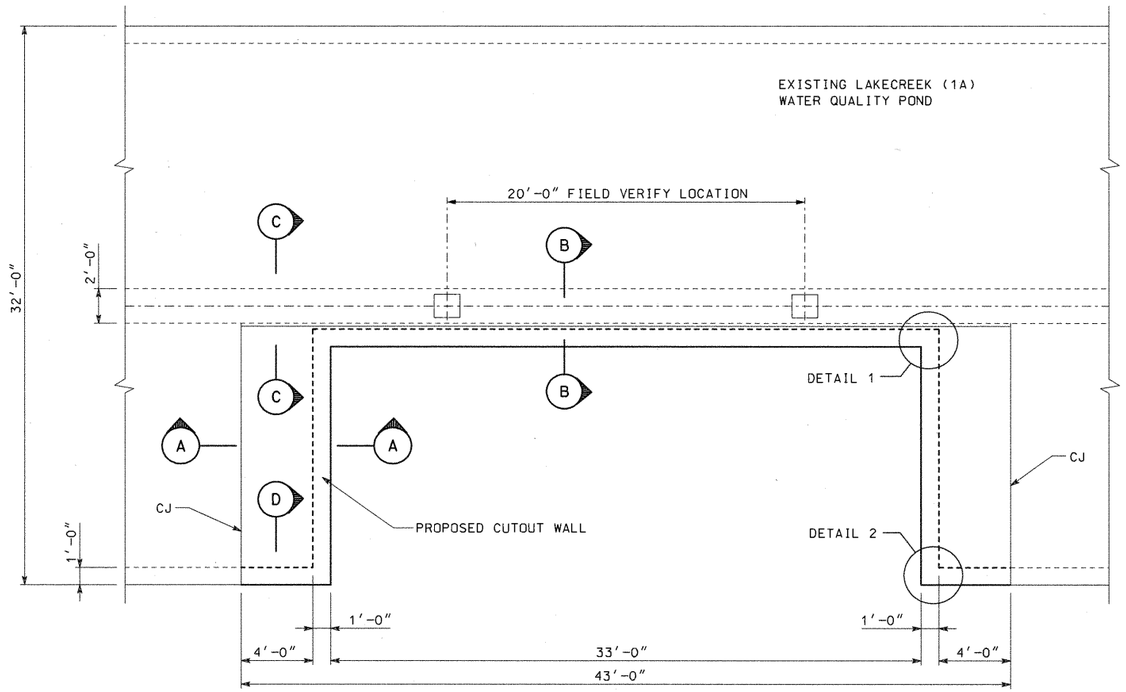

PARTIAL PLAN
SCALE: 1/4" = 1'-0"

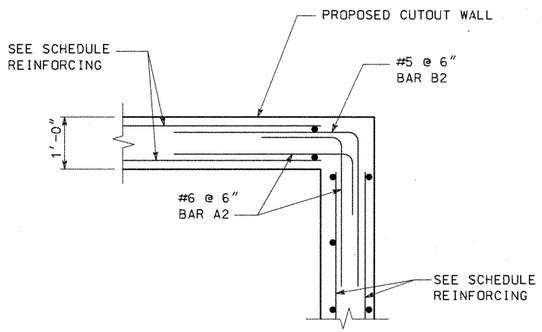

DETAIL 1
SCALE: 3/8" = 1'-0"

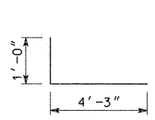

BARS A1 (#6)

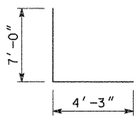

BAR B1 (#6)

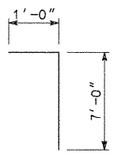

BAR A2 (#6)

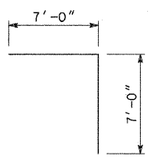

BAR B2 (#5)

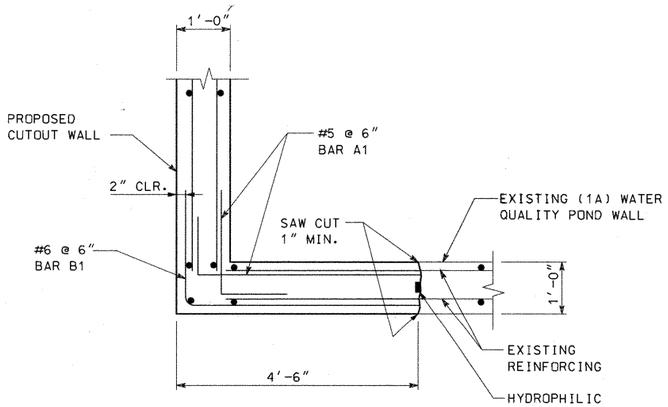

DETAIL 2

NOTES:

1. DESIGN IN ACCORDANCE WITH AASHTO 1996 STANDARD SPECIFICATIONS FOR HS-20 LOADING.
2. ALL CONCRETE SHALL BE CLASS "C".
3. WATERSTOPS SHALL BE HYDROPHILIC WATERSTOPS.

STATE OF TEXAS
WILLY R. BURNS
44162
REGISTERED
PROFESSIONAL ENGINEER
11/21/00

NO.	DATE	REVISION	APPROVED
		Change Order No 10A	

Turner Collie & Braden Inc.
Engineers • Planners • Project Managers

Date		Job No.	Approved
TRANSPORTATION		81-07401-024	

© 1998 Texas Department of Transportation

US 183
LAKECREEK
CUTOUT WALL
STRUCTURAL DETAILS

SHEET 1 OF 2

Designed	WRB	FED. RD. DIV. NO.	STATE	FEDERAL AID PROJECT NO.					HIGHWAY NO.
Checked		6	TEXAS	NH99(556)					US 183
Drawn	JAF	STATE DIST. NO.	COUNTY		CONTROL NO.	SECTION NO.	JOB NO.		SHEET NO.
Checked		14	WILLIAMSON		151	5	072		261K

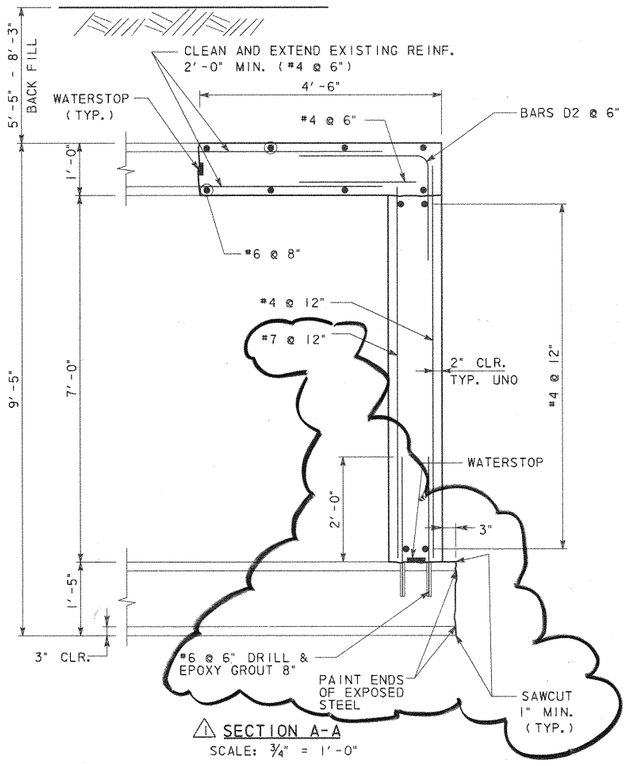

⚠ SECTION A-A
SCALE: ¾" = 1'-0"

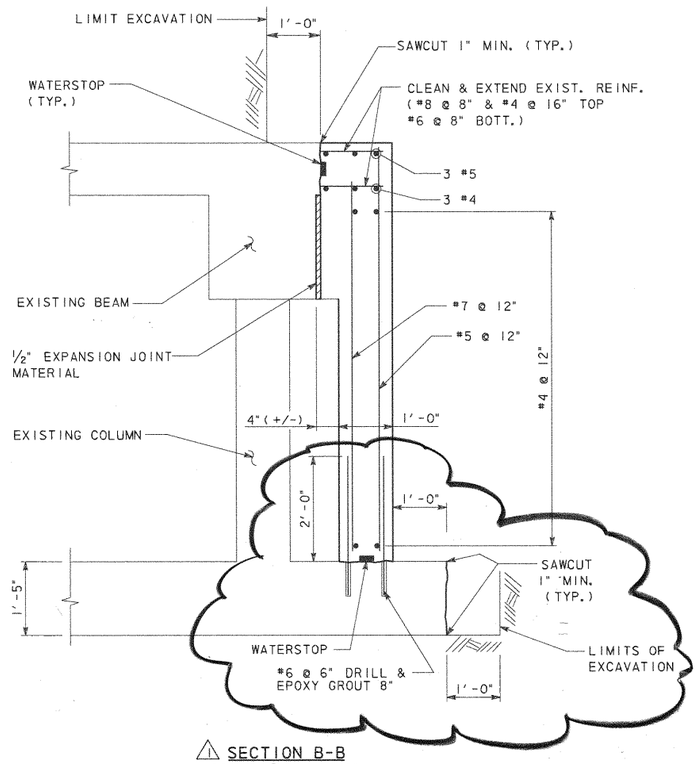

⚠ SECTION B-B
SCALE: ¾" = 1'-0"

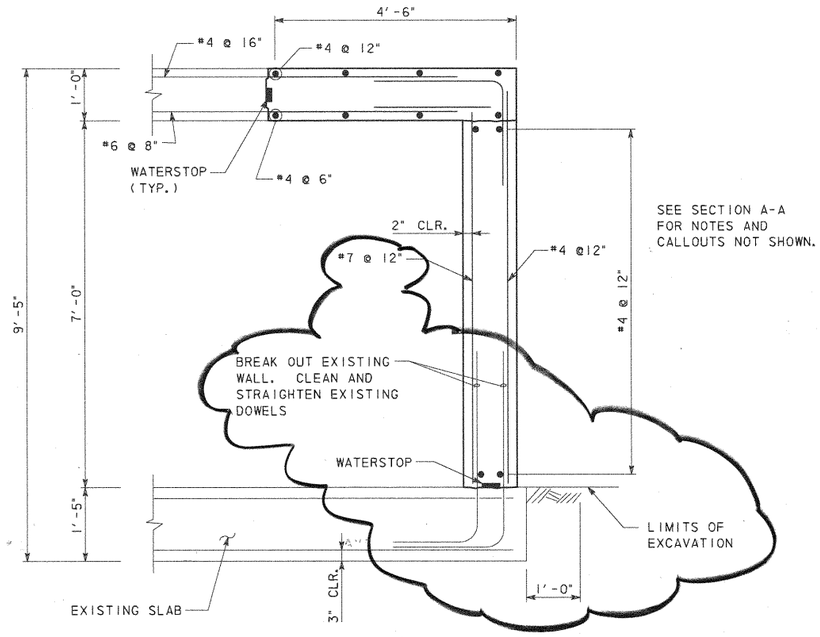

⚠ SECTION D-D
SCALE: ¾" = 1'-0"

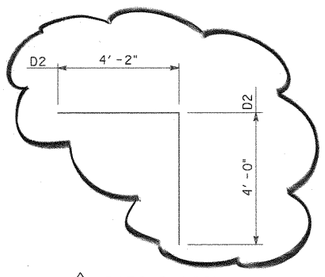

⚠ BARS D (#6)

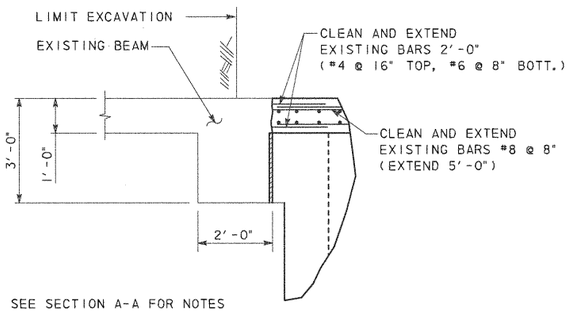

SEE SECTION A-A FOR NOTES AND REINFORCEMENT INFORMATION

SECTION C-C
SCALE: ½" = 1'-0"

DESCRIPTION	CLASS "C" CONC.	EXCAVATION	TEMP. SPL. SHORING	REINF. STEEL	DEMOLITION
	CY	CY	SF	LBS	CY
CUTOUT (NORTH)	22.2	255	789	9610	71.0

STATE OF TEXAS
WALLY R. BURNS
44162
REGISTERED PROFESSIONAL ENGINEER

Wally R Burns
11/13/02

NO.	DATE	REVISION	APPROVED
		CHANGE ORDER 10A	
⚠ 1	JAN 2002	REVISED SLAB CONN.	WRB

Turner Collie & Braden Inc.
Engineers • Planners • Project Managers

TRANSPORTATION | Job No. 81-07401-024

© 1998 Texas Department of Transportation

US 183
LAKECREEK
CUTOUT WALL
STRUCTURAL DETAILS

SHEET 2 OF 2

Designed	WRB	FED. RD. DIV. NO.	STATE	FEDERAL AID PROJECT NO.				HIGHWAY NO.
Checked		6	TEXAS	NH99(556)				US 183
Drawn	JAF	STATE DIST. NO.	COUNTY	CONTROL NO.	SECTION NO.	JOB NO.		SHEET NO.
Checked		14	WILLIAMSON	151	5	072		261 L

0151-05-072 CO 10-A

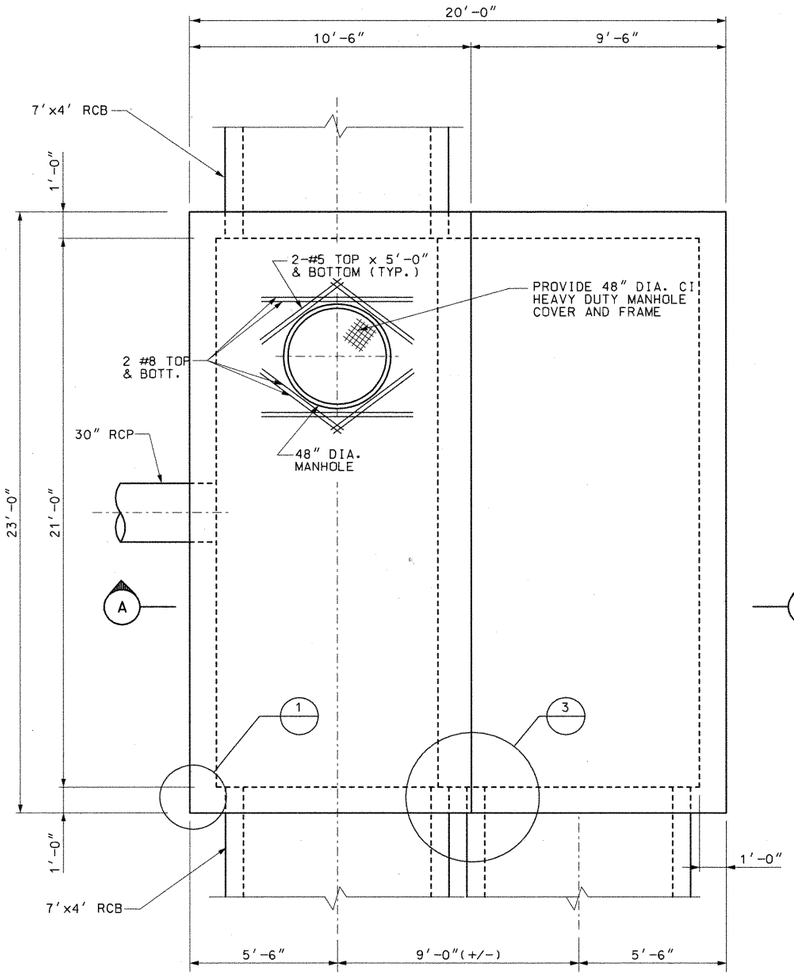

PLAN
$\frac{3}{8}$" = 1'-0"

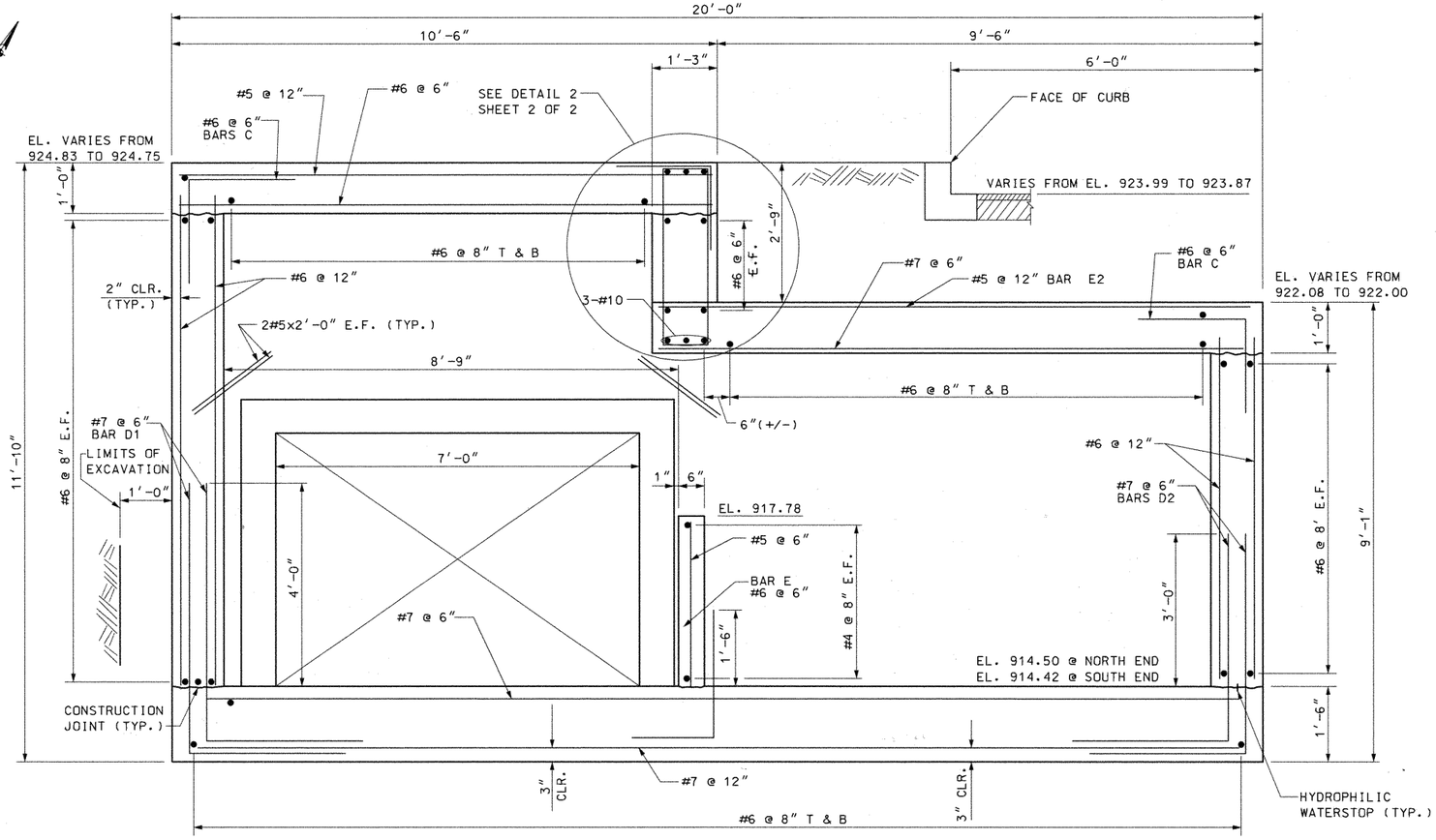

SECTION A-A
$\frac{3}{4}$" = 1'-0"

NOTES:

1. DESIGN IN ACCORDANCE WITH AASHTO 1996 STANDARD SPECIFICATIONS FOR HS-20 LOADING.
2. ALL CONCRETE SHALL BE CLASS "C".
3. SEE HYDRAULIC DETAIL SHEETS FOR FLOW LINES.
4. WATERSTOPS SHALL BE HYDROPHILIC WATERSTOPS.

STATE OF TEXAS
WALLY R. BURNS
44162
REGISTERED PROFESSIONAL ENGINEER
11/21/00

NO.	DATE	REVISION	APPROVED
		Change Order No 10 A	

Turner Collie & Braden Inc.
Engineers • Planners • Project Managers

TRANSPORTATION (Unit) | 83-07401-024 (Job No.) | (Approved)

© 1998 Texas Department of Transportation

US 183
LAKECREEK
WATER QUALITY POND
STRUCTURAL DETAILS

SHEET 1 OF 2

Designed	Proj. No. Div. No.	State	Federal Aid Project No.	Highway No.
WRB	6	TEXAS	NH99(556)	US 183
Checked				
JAF	State Dist. No.	County	Control No. / Section No. / Job No.	Sheet No.
Drawn	14	WILLIAMSON	151 / 5 / 072	261M
Checked				

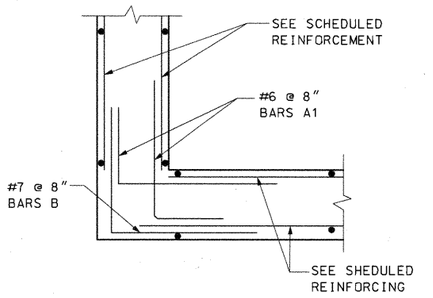

DETAIL 1 (ABOVE EL. 920'-1")
1" = 1'-0"

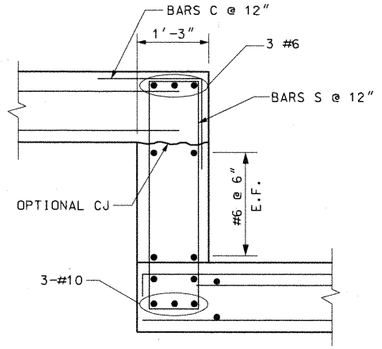

DETAIL 2
1" = 1'-0"

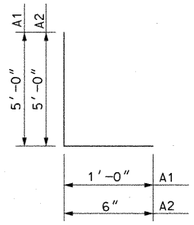

BARS A (#6)

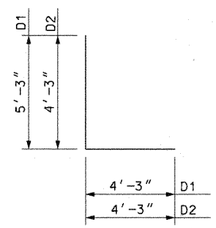

BARS D (#7)

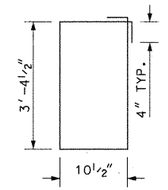

BARS S (#4)

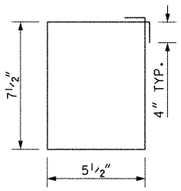

BARS S1 (#3)

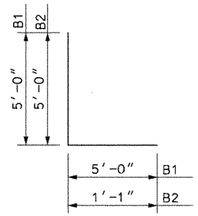

BARS B (#7)

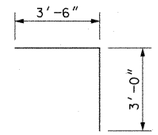

BARS C (#6)

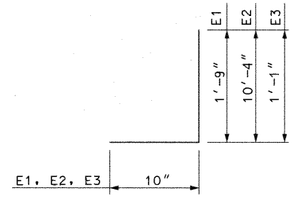

BARS E (#5)

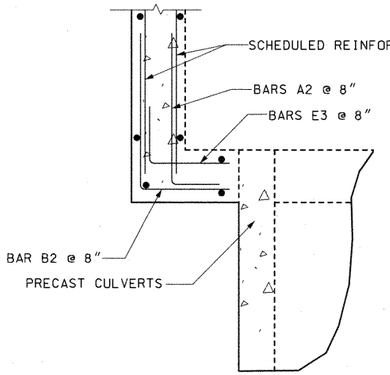

DETAIL 1 (BELOW EL. 920'-1")
1" = 1'-0"

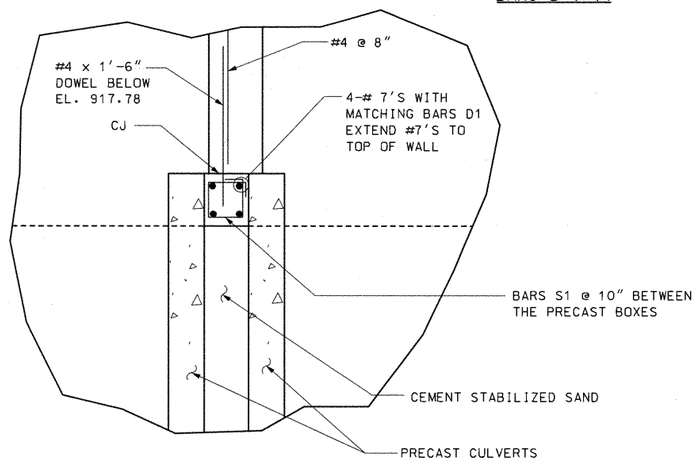

DETAIL 3 (BELOW EL. 920'-1")
1" = 1'-0"

ESTIMATED QUANTITIES *				
DESCRIPTION	CLASS "C" CONC.	EXCAVATION	TEMP SPL SHORING	REINF. STEEL
	CY	CY	SF	LBS
SPLITTER BOX FOR WATER QUALITY POND	72.1	240	1089	23,270

* QUANTITIES FOR CONTRACTOR'S INFORMATION ONLY.
ALL ITEMS ARE SUBSIDIARY TO THE SPLITTER BOX ITEM.

STATE OF TEXAS
WALLY R. BURNS
44162
REGISTERED PROFESSIONAL ENGINEER
11/21/00

NO.	DATE	REVISION	APPROVED
		Change Order No 10A	

Turner Collie & Braden Inc.
Engineers • Planners • Project Managers

UNIT	JOB NO.	Approved
TRANSPORTATION	81-07401-024	

© 1998 Texas Department of Transportation

US 183
LAKECREEK
WATER QUALITY POND
STRUCTURAL DETAILS

SHEET 2 OF 2

Designed	WRB	FED. RD. DIV. NO.	STATE	FEDERAL AID PROJECT NO.				ASSIGNMENT NO.
Checked		6	TEXAS	NH99(555)				US 183
Drawn	JAF	STATE DIST. NO.	COUNTY	CONTROL NO.	SECTION NO.	JOB NO.		SHEET NO.
Checked		14	WILLIAMSON	151	5	072		2&1N

Job 10A
0121-02-055

AF 41904A

Ultimate Drainage Areas North of R.M. 620 Were Used In Storm Sewer And Water Quality Pond Design

R.M. 620

PECAN PARK

LAKE CREEK PARKWAY

HYMEADOW

Q50 = 447.4 cfs
Outfall 1

Pond 1A

Pond 1B

Pond 1C

Outfall 2
Q100 = 412 cfs
Q50 = 385 cfs

Pond 2A

Pond 2B

Pond 2C

Pond 2D1

Pond 2D2

R.M. 620 Median Pond

Q50 = 800 cfs

Q50 = 89.2 cfs

To Drainage Structures (By Others)

MELLOW MEADOWS DRIVE

LAKESTOP BLVD.

Interim Drainage Areas

US 183

R.M. 620

ANDERSON MILL ROAD

CONTRIBUTING AREA TO LAKE CREEK CHANNEL

A_{TOTAL} = 1133 ACRES
Q_{50} = 4100 cfs *
Q_{100} = 4400 cfs *

* THESE FLOWS ARE BASED ON REGIONAL ANALYSIS OF THE ENTIRE CONTRIBUTING AREA AND DO NOT EQUATE TO THE ACCUMULATED THYSYS FLOWS.

Q50 = 200 cfs

NO.	DATE	REVISION	APPROV.
4			
3			
2			
1			

Turner Collie & Braden Inc.
CONSULTING ENGINEERS
TEXAS AUSTIN/DALLAS/HOUSTON/PORT ARTHUR
COLORADO DENVER

Unit: AUSTIN | Job No. 72-07401-022 | Approved

STATE DEPARTMENT OF HIGHWAYS AND PUBLIC TRANSPORTATION

©1998 TxDOT

DRAINAGE AREA MAP

SCALE: 1" = 200'

Designed DAN	FED. NO. DIV. NO.	STATE	FEDERAL AID PROJECT NO.			HIGHWAY NO.
Checked	6	TEXAS	NH 99(556)			U.S. 183
Drawn WWS	STATE DIST. NO.	COUNTY	CONTROL NO.	SECTION NO.	JOB NO.	SHEET NO.
Checked DAN	14	WILLIAMSON	151	05	072	262a

STATE OF TEXAS
Robert W. Barnett
49537
REGISTERED PROFESSIONAL ENGINEER

Robert W. Barnett
5-09-88

A.F. 61904A

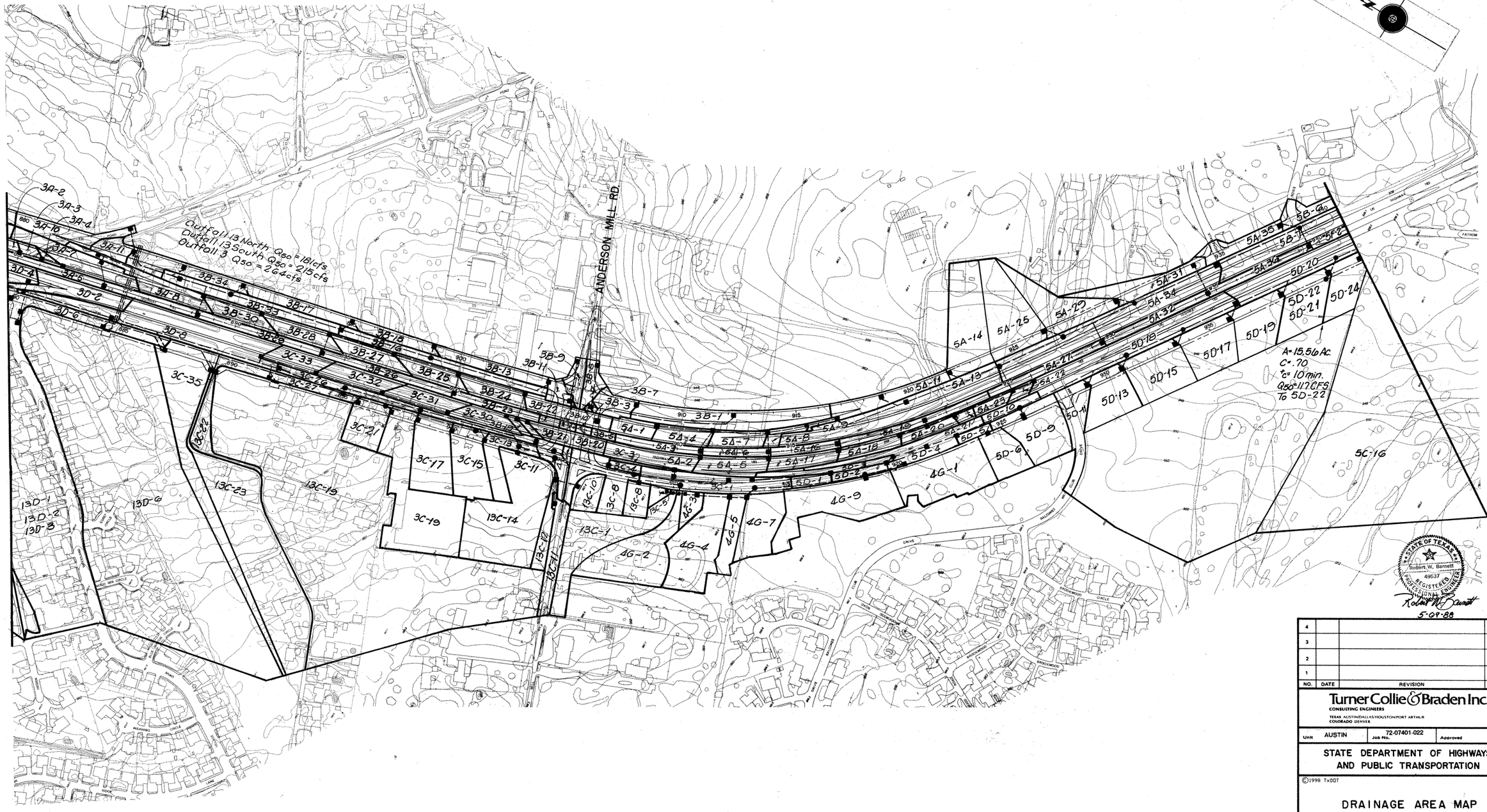

NO.	DATE	REVISION	APPROV.
4			
3			
2			
1			

Turner Collie & Braden Inc.
CONSULTING ENGINEERS
TEXAS AUSTIN/DALLAS/HOUSTON/PORT ARTHUR
COLORADO DENVER

Unit AUSTIN | Job No. 72-07401-022 | Approved

STATE DEPARTMENT OF HIGHWAYS AND PUBLIC TRANSPORTATION

©1998 TxDOT

DRAINAGE AREA MAP

SCALE: 1"=200'

Designed DAN	FED. RD. DIV. NO.	STATE	FEDERAL AID PROJECT NO.			HIGHWAY NO.
Checked	6	TEXAS	NH 99(556)			U.S. 183
Drawn WWS	STATE DIST. NO.	COUNTY	CONTROL NO.	SECTION NO.	JOB NO.	SHEET NO.
Checked DAN	14	WILLIAMSON	151	05	072	202b

A.F. 41804A

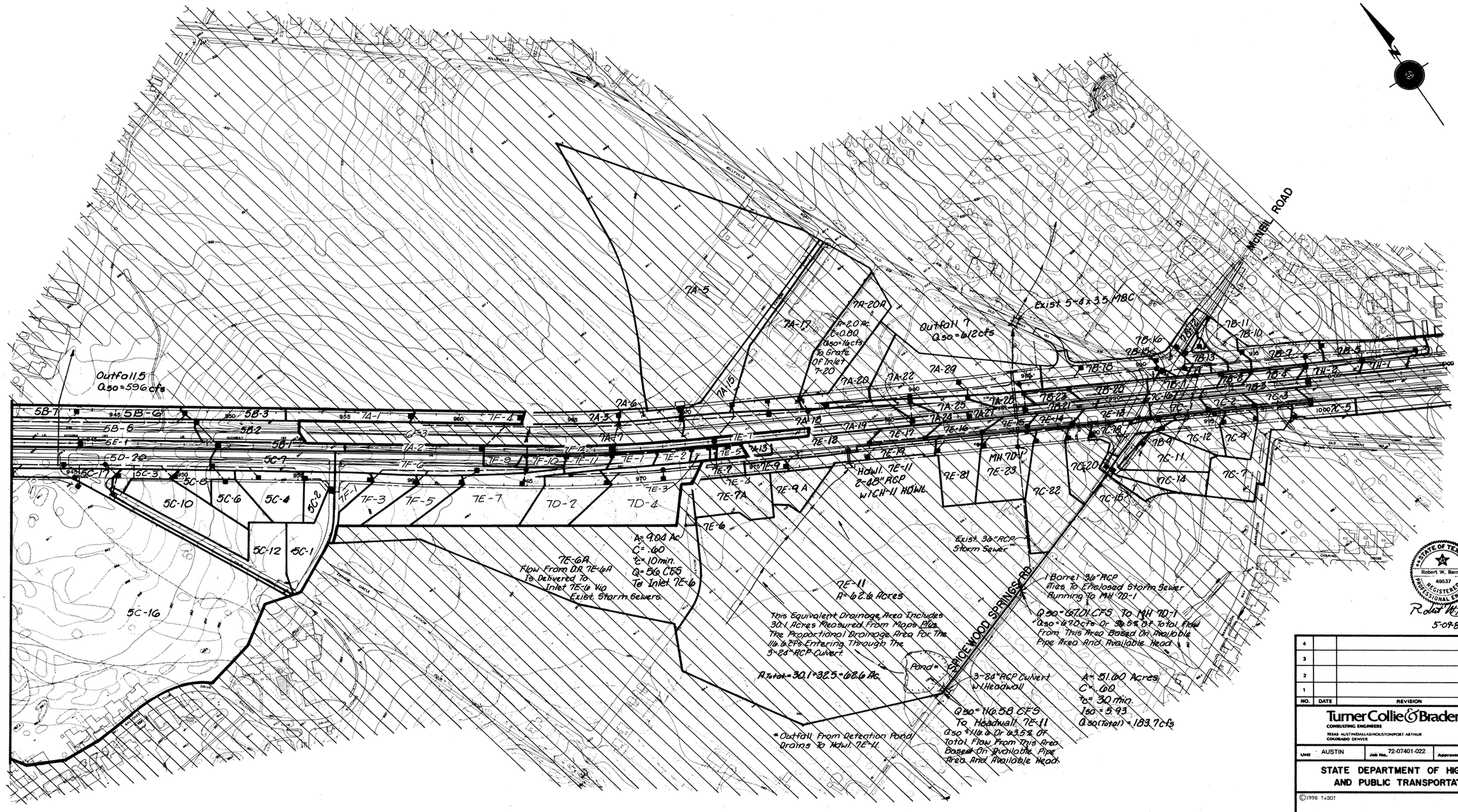
MICHEL ROAD
Outfall 5
Q50=596cfs
Outfall 7
Q50=612cfs
Exist 5-8'x3.5' MBC
7A-5
7A-17
7A-20A
A=2.0 Ac.
C=0.80
Q50=14cfs
To Grate Of Inlet 7-20
7A-15
7A-6
7A-3
7A-7
7A-18
7A-19
7A-20
7A-22
7A-29
7A-25
7A-24
7A-27
7A-26
7A-1
7A-2
7A-13
7F-4
7F-12
7F-11
7F-10
7F-9
7F-8
7F-6
7F-5
7F-3
7F-2
7F-1
7E-1
7E-2
7E-5
7E-7
7E-8
7E-9
7E-9A
7E-9A
7E-6
7E-3
7E-4
7E-7A
7E-10
7E-12
7E-13
7E-14
7E-15
7E-16
7E-17
7E-18
7E-19
7E-11
7E-81
7E-82
7E-23
MH 7D-1
7D-2
7D-4
HDWL 7E-11
2-48" RCP
W/CH-11 HDWL
5B-7
5B-6
5B-5
5B-3
5B-2
5B-1
5E-1
5D-20
5C-17
5C-7
5C-3
5C-8
5C-10
5C-6
5C-4
5C-2
5C-12
5C-1
5C-16
7B-11
7B-10
7B-16
7B-15
7B-13
7B-12
7B-14
7B-18
7B-17
7B-1
7B-2
7B-3
7B-4
7B-5
7B-6
7B-7
7B-8
7B-9
7B-21
7B-22
7B-23
7C-16
7C-1
7C-2
7C-3
1000 7C-5
7C-18
7C-19
7C-20
7C-12
7C-4
7C-11
7C-14
7C-7
7C-82
7C-15
7D-9
7D-11
7D-12
7D-13
7D-14
7D-15
7D-16
7D-17
7D-18
7D-19
7D-20
7D-21
7D-22
7D-23
7D-24
7D-25
7D-26
7D-27
7D-28
7D-29
7D-30
7D-31
7D-32
7D-33
7D-34
7D-35
7D-36
7D-37
7D-38
7D-39
7D-40
7D-41
7D-42
7D-43
7D-44
7D-45
7D-46
7D-47
7D-48
7D-49
7D-50

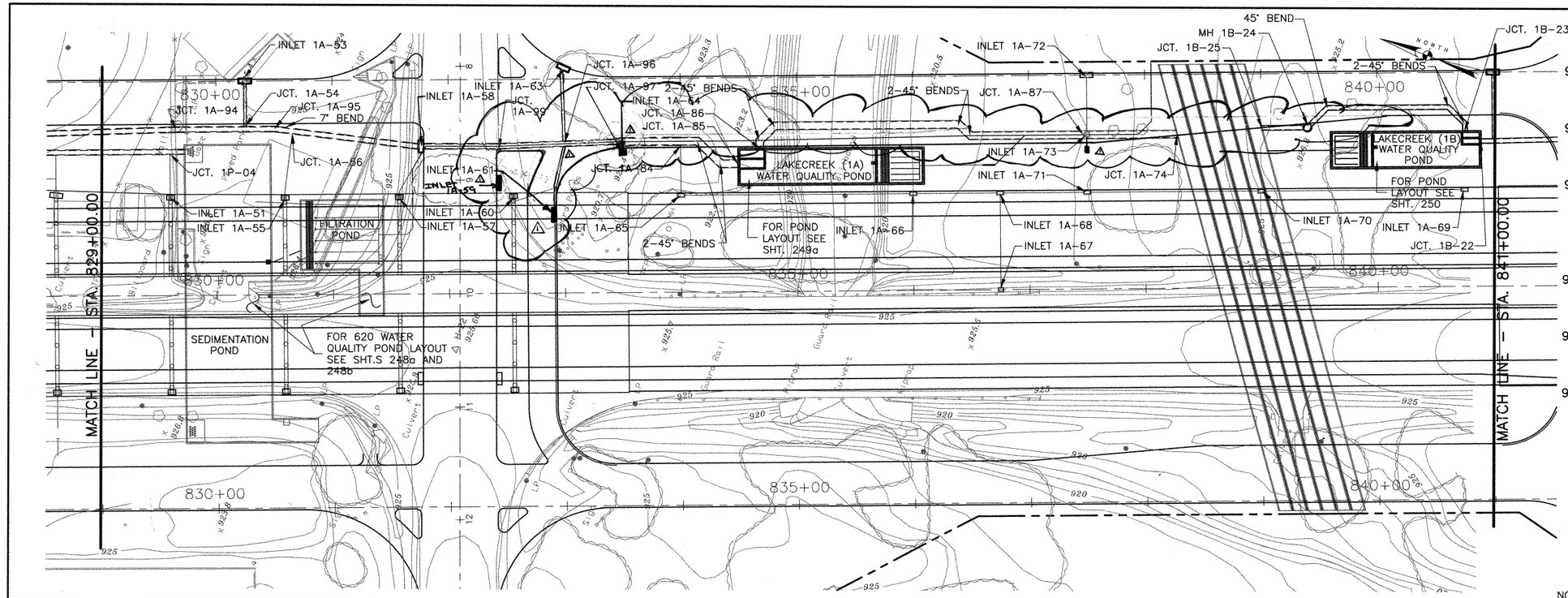
MATCH LINE – STA. 829+00.00
MATCH LINE – STA. 841+00.00
INLET 1A–53
JCT. 1A–54
JCT. 1A–94
JCT. 1A–95
7° BEND
JCT. 1A–56
JCT. 1P–04
INLET 1A–51
INLET 1A–55
INLET 1A–58
INLET 1A–63
JCT. 1A–96
JCT. 1A–97
2–45° BENDS
JCT. 1A–99
INLET 1A–64
JCT. 1A–86
JCT. 1A–85
INLET 1A–61
INLET 1A–59
JCT. 1A–84
INLET 1A–60
INLET 1A–57
INLET 1A–65
FILTRATION POND
SEDIMENTATION POND
FOR 620 WATER QUALITY POND LAYOUT SEE SHT.S 248a AND 248b
LAKECREEK (1A) WATER QUALITY POND
FOR POND LAYOUT SEE SHT. 249a
2–45° BENDS
INLET 1A–66
INLET 1A–72
JCT. 1B–24
JCT. 1B–25
45° BEND
2–45° BENDS
JCT. 1A–87
INLET 1A–73
INLET 1A–71
JCT. 1A–74
INLET 1A–68
INLET 1A–67
LAKECREEK (1B) WATER QUALITY POND
FOR POND LAYOUT SEE SHT. 250
INLET 1A–70
INLET 1A–69
JCT. 1B–22
JCT. 1B–23
830+00
835+00
840+00
NORTH
STA. 829+60 ~ 126.67' LT. ℄
JCT. 1P–04
STA. 829+60.21 ~ 106.42' RT. ℄
STA. 829+60.21 ~ 82.08' LT. ℄
PLUG – TEMPORARY
TIE TO 1A–51
FL 920.65
43' ~ 18" RCP @ 7.47%
FL 917.29
FL 916.04
STA. 830+65.55 ~ 142.24' LT. ℄
JCT. 1A–56
STA. 830+58.71 ~ 107.42' RT. ℄
STA. 830+58.71 ~ 81.08' LT. ℄
PLUG – TEMPORARY
TIE TO 1A–55
FL 920.09
62' ~ 18" RCP @ 2.36%
FL 918.63
FL 916.34
STA. 9+00 ~ 83' ℄ R.M. 620
STA. 832+92.87 ~ 99.33' LT. ℄
INLET C.I. 1A–61
TYPE IIR (10')
T.C. 922.96
STA. 832+55.71 ~ 107.42' RT. ℄
STA. 832+55.71 ~ 81.08' LT. ℄
PLUG – TEMPORARY
TIE TO 1A–60
FL 919.96
FL 919.46
FL 920.10
40 ~ 18" RCP @ 0.33%
Guard Rail
Culvert
Curb Inlet
Headwall
LP
SIDEWALK
x 925.7
x 925.5
x 926.6
x 926.8
x 924.6
x 924.9
925.2
923.3
923.2
920.5
926.3
926.4
926.5
926.6
926.7
926.8
926.9
927.0
927.1
927.2
927.3
927.4
927.5
927.6
927.7
927.8
927.9
928.0
928.1
928.2
928.3
928.4
928.5
928.6
928.7
928.8
928.9
929.0
929.1
929.2
929.3
929.4
929.5
929.6
929.7
929.8
929.9
930.0
930.1
930.2

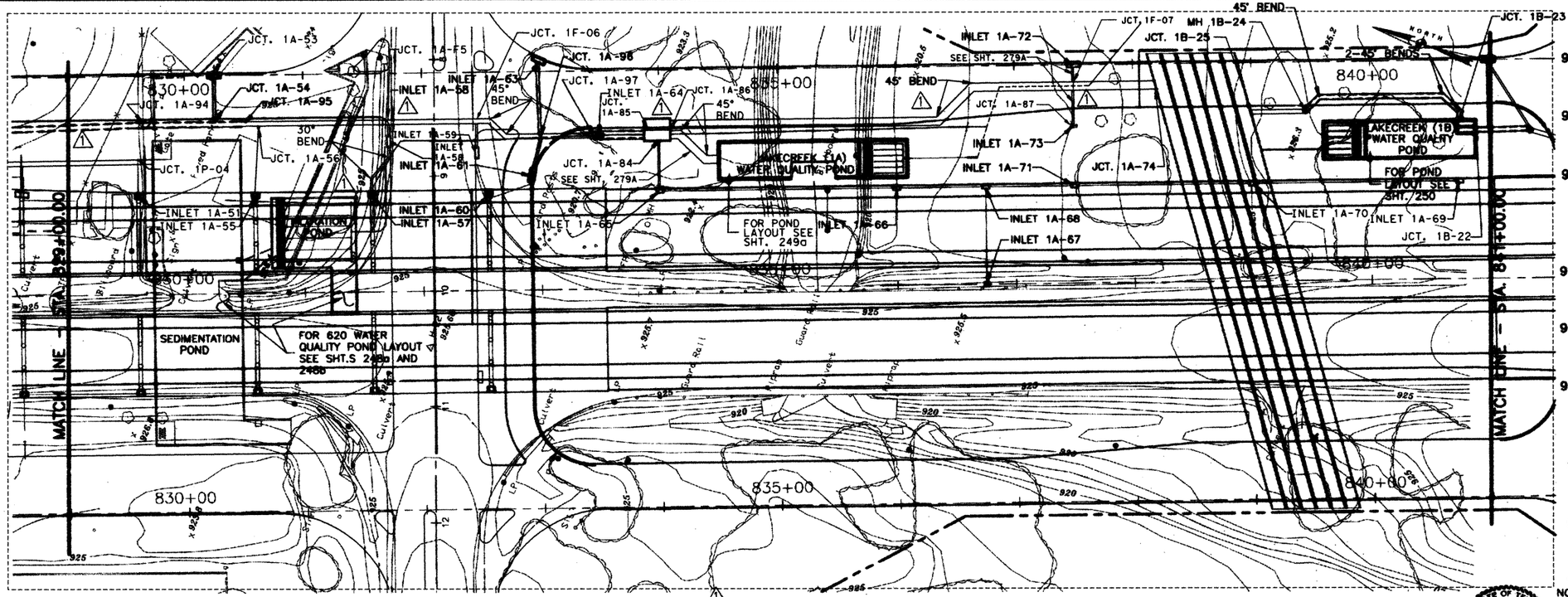

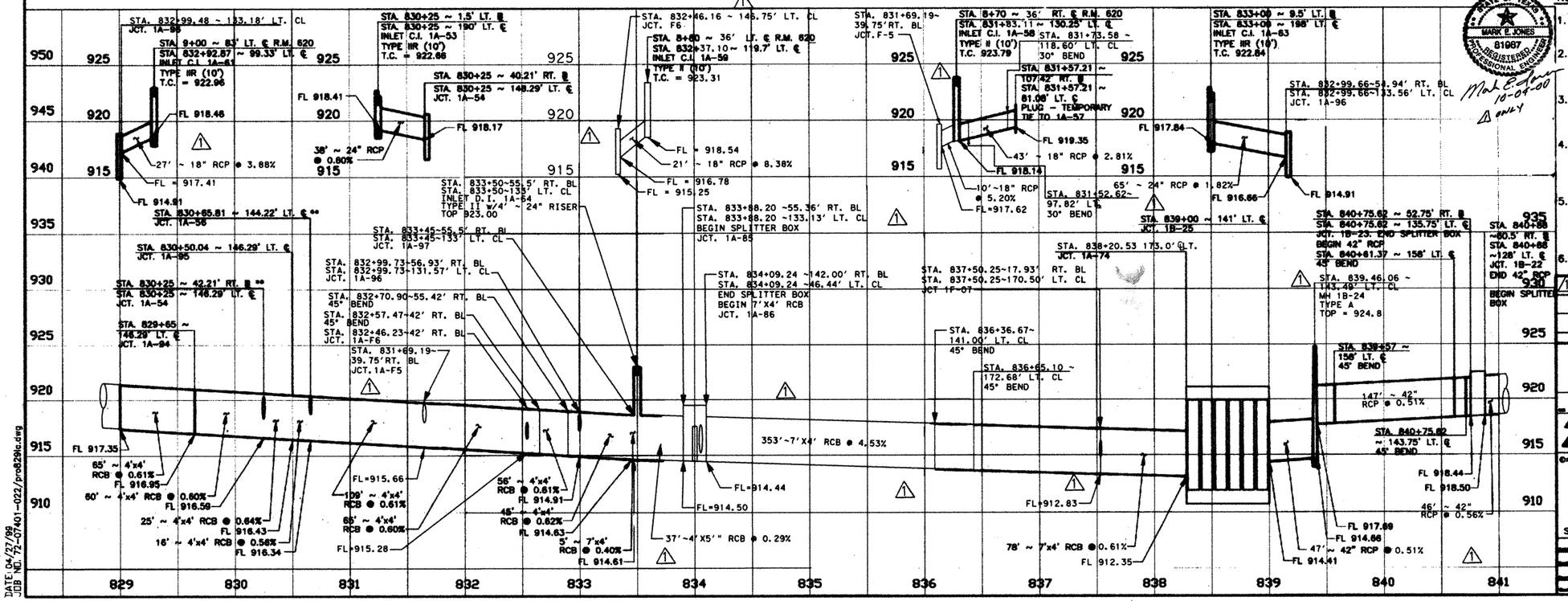

NOTES:

1. SEE MAIN LANE STORM SEWER PROFILES SHEET 316 FOR MAIN LANE DRAINAGE.
2. SWALES AND INLETS IN SEPARATION AREA WILL TYPICALLY BE 6' BEHIND FACE OF CURB UNLESS DIMENSIONED OTHERWISE.
3. FOR INLETS 1A-51, 1A-55, 1A-57, & 1A-60, SEE SCUPPER DETAILS, INTERIOR BENT DETAILS, SHT.S 448 AND 449.
4. LOCATION AND FLOWLINES OF EXIST. PIPE TO BE FIELD VERIFIED BY CONTRACTOR.*
5. ALL BENDS IN BOX CULVERTS ARE CALLED OUT FROM CENTERLINE OF STRUCTURE.
6. ** STATION/OFFSETS CALLED OUT FROM CENTERLINE OF STRUCTURE.

STATE OF TEXAS — MARK E. JONES — 81067 — REGISTERED PROFESSIONAL ENGINEER — Mark E. Jones 10-07-00 — ⚠ ONLY

STATE OF TEXAS — REBECCA A. BILLS — 82587 — REGISTERED PROFESSIONAL ENGINEER — Rebecca A. Bills 5-5-99

	CHANGE ORDER NO. 10
⚠	

Turner Collie & Braden Inc.
ENGINEERS • PLANNERS • PROJECT MANAGERS

AUSTIN — 72-07401-022

Texas Department of Transportation

LEFT STORM SEWER PLAN & PROFILE STA. 829+00 TO STA. 841+00

SCALE: H:1"=50', V:1"=5'

DIST	COUNTY	FEDERAL AID PROJECT NO.	SHEET NO.
AUS	WILLIAMSON	NH 99(556)	275A

DESIGNED	DETAILED	QUANTITIES	CHECKED
RAB	BB	MRE	CDB

HIGHWAY NO.	CONTROL	SECTION	JOB
U.S.183	0151	05	072

DATE: 04/27/00
JOB NO. 72-07401-022/pro829lc.dwg

	ITEM 100	ITEM 110	ITEM 110	ITEM 132	ITEM 132	ITEM 160	ITEM 160	ITEM 164	ITEM 164	ITEM 164	ITEM 168	ITEM 169	ITEM 169	ITEM 247	ITEM 310	ITEM 400	ITEM 400	ITEM 402	ITEM 421	ITEM 423	ITEM 432	ITEM 450	ITEM 450	ITEM 460	ITEM 462	ITEM 462	ITEM 462
	Prep. R.O.W.	EXCAV (CHANNEL)	EXCAV (POND)	EMBANK (TY B)	EMBANK (DC) (TY C) MOD	Furn & Plac Tpsl (Cl 2) (4in)	Furn & Plac Tpsl (Cl 2) (6in)	Cell Fib Mulch Seed	Drill Seed (Temp) (Warm)	Drill Seed (Perm) (Urban) (Clay)	Vegetative Watering	SOIL RET BLNKT (CL1) (TY A)	SOIL RET BLNKT (CL2)(TY G)	Fl Bs (TyD Gr6 Cl 2) (Comp In Plac)	Apsh Mat (MC-30)	Struct Excav (Sewer)	Struct Excav (Culv Large)	TRENCH EXCAV PROTECT	CL C Conc. (misc.)	Pond Wall (Cast-In-Place)	RIPRAP (CONC.) (CL B)	Rail (TY PR)	Rail (TY C4) (S)	CMP (Gal Stl 12in)	Conc Box Culv (2'x4')	Conc Box Culv (4'x4')	Conc Box Culv (6'x4')
	AC	CY	CY	CY	CY	SY	SY	SY	SY	SY	MG	SY	SY	TONS	GAL	CY	CY	LF	CY	SF	CY	LF	LF	LF	LF	LF	LF
620 Median Pond	–	–	7313	–	892	–	2144	–	1072	2144	54	–	–	–	–	4130	–	2165	81.3	9811	5.1	–	1055	35	–	–	468
LakeCreek Pond 1A	–	–	(2053)	–	–	–	–	–	–	–	–	–	–	–	–	107	–	95	–	–	–	–	–	6	–	–	–
LakeCreek Pond 1B	–	–	(1908)	–	–	–	–	–	–	–	–	–	–	–	–	42	–	54	–	–	–	–	–	6	–	–	–
LakeCreek Pond 1C	–	–	(1657)	–	–	–	–	–	–	–	–	–	–	–	–	7	–	10	–	–	–	–	–	6	–	–	–
Hymeadow Pond 2A	–	–	(3048)	–	–	–	–	–	–	–	–	–	–	–	–	115	–	62	–	–	–	–	–	6	–	–	–
Hymeadow Pond 2B	–	–	(1529)	–	–	–	–	–	–	–	–	–	–	–	–	2	–	7	–	–	–	–	–	6	–	–	–
Hymeadow Pond 2C	–	–	(2260)	–	–	–	–	–	–	–	–	–	–	–	–	50	–	34	–	–	–	–	–	6	–	–	–
Hymeadow Pond 2D1	–	–	(3286)	–	–	–	–	–	–	–	–	–	–	–	–	212	–	124	–	–	–	–	–	6	–	–	–
Hymeadow Pond 2D2	–	–	(4381)	–	–	–	–	–	–	–	–	–	–	–	–	1893	–	735	–	–	–	–	–	6	–	–	–
Pond Springs Pond	1.04	93	5300	–	441	–	5056	–	2420	4840	121	1403	–	45	–	1656	–	336	57.8	5002	78	–	–	13	–	44	–
Pond Springs Detention Pond	1.15	1162	22610	308	–	1459	2780	–	3391	6782	279	363	2186	141	50	2056	756	1135	–	24431	280	120	140	0	–	–	–
Woods Pond	7.1	2640	64420	1202	8970	–	34364	437	18275	36550	859	6500	6500	275	–	2016	–	649	–	–	166.5	–	–	75	152	–	–
TOTAL	9.29	3895	99643	1510	10303	1459	44,344	437	25158	50316	1313	8266	8686	461	50	12286	756	5406	139.1	39244	529.6	120	1195	171	152	44	468

	ITEM 462	ITEM 462	ITEM 462	ITEM 462	ITEM 462	ITEM 462	ITEM 464	ITEM 464	ITEM 464	ITEM 464	ITEM 465	ITEM 465	ITEM 465	ITEM 465	ITEM 466	ITEM 466	ITEM 466	ITEM 466	ITEM 466	ITEM 466	ITEM 466	ITEM 467	ITEM 481	ITEM 481	ITEM 481	ITEM 481	ITEM 529	ITEM 530
	Conc Box Culv (4'x4')	Conc Box Culv (6'x4')	Conc Box Culv (6'x5')	Conc Box Culv (7'x4')	Conc Box Culv (8'x4')	Conc Box Culv (8'x6')	RCP SEW (D-LOAD) (18")	RCP SEW (D-LOAD) (24")	RCP SEW (D-LOAD) (36")	RCP SEW (D-LOAD) (48")	MAN H (COMPL) TY A	INLET (COMPL) (DROP) (TY I)	INLET (COMPL) (DROP) (TY IB)	INLET (COMPL) (DROP) (TY II)	CULV HDWLL TY PW-45	CULV HDWLL TY MCW-P-15 MOD	CULV HDWLL TY MCW-P-30 MOD	CULV HDWLL TY MCW-P-45 MOD	CULV HDWLL TY MCW-F1-30	CULV HDWLL TY FW-N	CULV HDWLL TY FW-45	S.E.T. TYII	* P.V.C. PIPE (SCH 40) 4"	* P.V.C. PIPE (SCH 40) 6"	* P.V.C. PIPE (SCH 40) 8"	* P.V.C. PIPE (SCH 40) 12"	* CONC. CURB (TY II) (6 IN)	CONC. DRVWY
	LF	LF	LF	LF	LF	LF	LF	LF	LF	LF	EA	EA	EA	EA	EA	EA	EA	EA	EA	EA	EA	EA	LF	LF	LF	LF	LF	SY
620 Median Pond	–	468	–	–	–	–	1487	–	–	210	–	–	–	–	–	–	–	–	–	–	–	1	324	–	77	–	–	21
LakeCreek Pond 1A	–	–	–	–	–	–	–	–	–	–	–	–	–	–	–	–	–	–	–	–	–	–	144	25	100	–	–	–
LakeCreek Pond 1B	–	–	–	–	–	–	–	–	–	–	–	–	–	–	–	–	–	–	–	–	–	–	114	24	58	–	–	–
LakeCreek Pond 1C	–	–	–	–	–	–	–	–	–	–	–	–	–	–	–	–	–	–	–	–	–	–	120	25	14	–	–	–
Hymeadow Pond 2A	–	–	–	–	–	–	6	–	–	–	1	–	–	–	–	–	–	–	–	–	–	–	138	25	65	–	–	–
Hymeadow Pond 2B	–	–	–	–	–	–	–	–	–	–	–	–	–	–	–	–	–	–	–	–	–	–	63	25	11	–	–	–
Hymeadow Pond 2C	–	–	–	–	–	–	–	–	–	–	–	–	–	–	–	–	–	–	–	–	–	–	156	25	38	–	–	–
Hymeadow Pond 2D1	–	–	–	–	–	–	70	–	–	–	–	–	–	–	–	–	–	–	–	–	–	–	288	25	54	–	–	–
Hymeadow Pond 2D2	–	–	–	–	–	–	735	–	–	–	1	–	–	–	–	–	–	–	–	–	–	–	252	27	5	–	–	–
Pond Springs Pond	44	–	–	–	–	–	–	–	–	–	–	–	–	–	–	–	–	–	–	–	–	–	704	–	357	–	–	42
Pond Springs Detention Pond	–	–	96	–	81	84	–	136	287	563	2	3	1	3	–	2	2	–	–	1	–	–	–	–	–	–	90	30
Woods Pond	–	–	30	175	333	28	66	–	–	–	–	2	–	–	1	–	–	1	1	–	1	6	–	–	–	75	–	37
TOTAL	44	468	126	175	414	112	2364	136	287	773	4	5	1	3	1	2	2	1	1	1	1	7	2303	201	779	75	90	130

	ITEM 531	ITEM 550	ITEM 550	ITEM 550	ITEM 3116	ITEM 3116	ITEM 3116	ITEM 5014	ITEM 5014	ITEM 5014	ITEM 8608
	CONC. WALKWAY (5 IN)	CHAIN LINK FENCE (6FT)	VEH. GATE (DOUBLE) (12FT)	VEH. GATE (DOUBLE) (20FT)	ASPH CONC (TY C) (SURF) (PV 32 MIN)	ASPH CONC. (TY C) 2"	ASPH CONC. (TY C) 1½"	GABIONS (3'X1') (GALV)	GABIONS (3'X3') (GALV)	GABIONS (6'X0.5') (GALV)	SAND FILTER SYSTEM
	SY	LF	EA	EA	TONS	TONS	TONS	CY	CY	CY	EA
620 Median Pond	–	–	–	2	–	–	–	–	20	6.7	1 (60'X64')
LakeCreek Pond 1A	–	–	–	–	–	–	–	6.6	10	–	1 (29'X30')
LakeCreek Pond 1B	–	–	–	–	–	–	–	6.6	10	–	1 (24'X30')
LakeCreek Pond 1C	–	–	–	–	–	–	–	6.6	10	–	1 (25'X30')
Hymeadow Pond 2A	–	–	–	–	–	–	–	6.6	10	–	1 (28'X30')
Hymeadow Pond 2B	–	–	–	–	–	–	–	6.6	10	–	1 (15'X30')
Hymeadow Pond 2C	–	–	–	–	–	–	–	6.6	10	–	1 (29'X30')
Hymeadow Pond 2D1	–	–	–	–	–	–	–	6.6	10	–	1 (30'X37')
Hymeadow Pond 2D2	–	–	–	–	–	–	–	6.6	10	–	1 (30'X47')
Pond Springs Pond	–	1050	2	–	–	8.3	–	–	38	10.3	1 (40'X93')
Pond Springs Detention Pond	46	2060	1	–	12	4.1	7.7	–	–	–	–
Woods Pond	–	2010	1	–	–	56.2	–	–	–	–	–
TOTAL	46	5120	4	2	12	68.6	7.7	52.8	138	17.0	10

NOTES:

( ) INCIDENTAL. FOR CONTRACTOR'S INFORMATION ONLY.

* SUBSIDIARY TO VARIOUS BID ITEMS.

Turner Collie & Braden Inc.
ENGINEERS • PLANNERS • PROJECT MANAGERS

AUSTIN | Job No. 61-99100-012 | File

©1998 TxDOT

US 183
WATER QUALITY AND DETENTION POND SUMMARY SHEET

SCALE: AS NOTED

Designed	FED. RD. DIV. NO.	STATE	FEDERAL AID PROJECT NO.		HIGHWAY NO.
KKY	6	TEXAS	NH 09(556)		US 183
Drawn	STATE DIST. NO.	COUNTY	CONTROL NO.	SECTION NO.	JOB NO.	SHEET NO.
JAM	AUS	WILLIAMSON	0151	05	072	48
Checked						
DLG						

DATE: 04/10/99
JOB No.: 72-07401-022
PATH: t:\ 07401022\drainage\wqptbl2.dgn

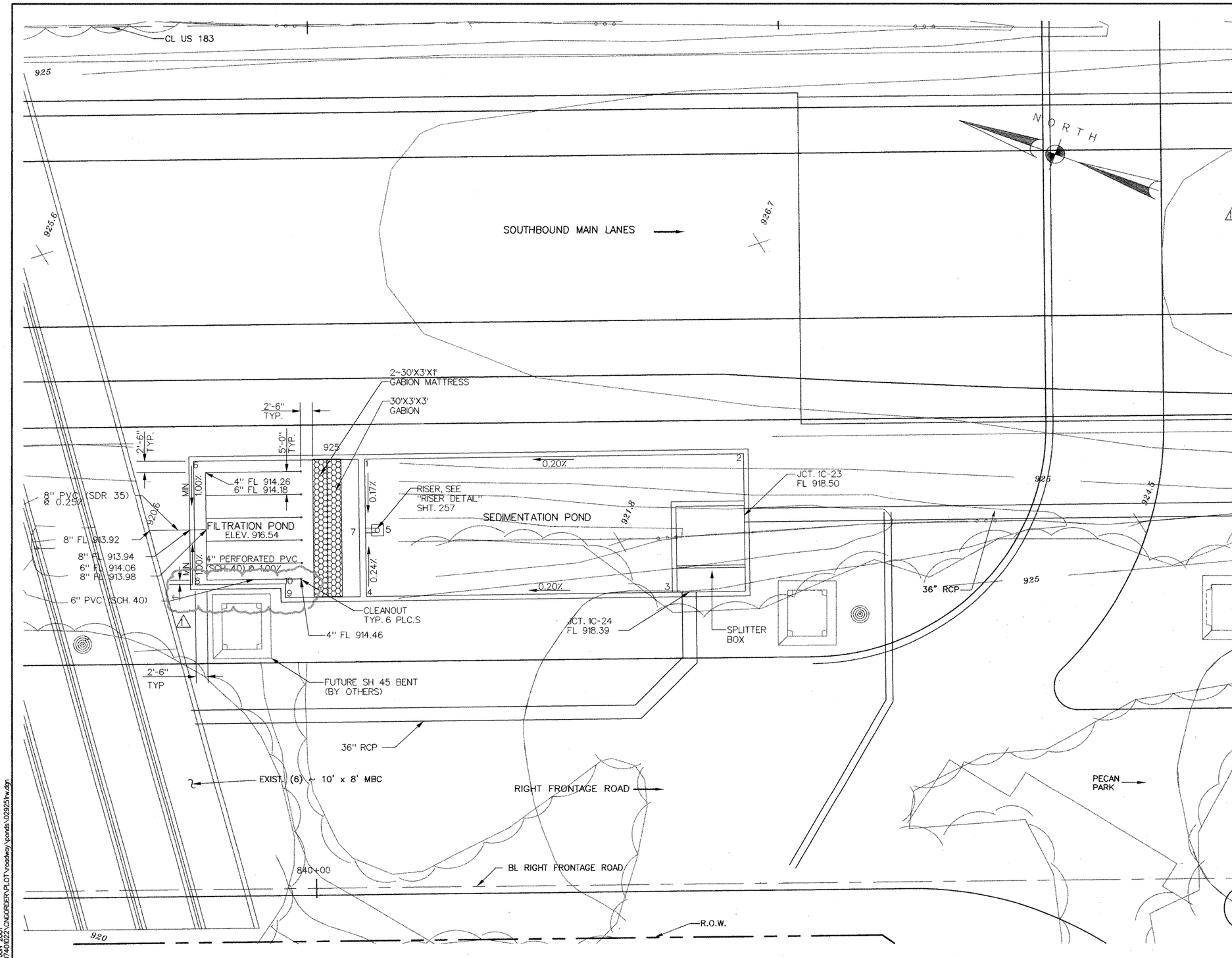

POINT LOCATION TABLE

POINT No.	STATION CL RT. FRT. RD.	OFFSET	ELEV. FL
1	840+11.50	93.75'LT	916.59
2	840+92.00	93.75'LT	916.75
3	840+76.50	63.75'LT	916.72
4	840+11.50	63.75'LT	916.54
5	840+13.75	76.17'LT	916.56
6	839+75.17	93.75'LT	916.54
7	840+10.17	76.17'LT	916.54
8	839+75.17	66.75'LT	916.54
9	839+94.35	63.75'LT	916.54
10	839+94.21	66.79'LT	916.54

NOTE: FOR CURRENT INFORMATION ON GRAVITY & FORCE MAINS IN REFERENCE TO CHANGE ORDER #10, CONTACT CITY OF AUSTIN WATER & WASTEWATER DEPT.

STATE OF TEXAS
DAVID L. GARRETT
76626
REGISTERED PROFESSIONAL ENGINEER

6/22/01
For Revision #1 Only

NOTES:

1. SEE WATER QUALITY POND STRUCTURAL DETAILS SHEETS 261a – 261b FOR POND DIMENSIONS AND REINFORCEMENT.
2. SEE STORM SEWER PROFILE SHEETS 294 FOR FLOWLINES OF RCPs/RCBs AT SPLITTER BOX.
3. SEE WATER QUALITY POND TYPICAL SECTIONS AND DETAILS SHEET 257 FOR FILTRATION POND DETAILS.

STATE OF TEXAS
REBECCA A. BILLS
82587
REGISTERED PROFESSIONAL ENGINEER

Rebecca A. Bills 5-3-99

NO.	DATE	REVISION	APPROV.
4			
3			
2			
1	6/01	CHANGE ORDER 10	

Turner Collie & Braden Inc.
ENGINEERS • PLANNERS • PROJECT MANAGERS

AUSTIN | 72-07401-022

Texas Department of Transportation

© 1999 TxDOT

LAKECREEK (1C)
UNDERGROUND
WATER QUALITY POND LAYOUT

SCALE: 1"=10'

Designed	CH	HSD. NO. DIV. NO.	STATE	FEDERAL AID PROJECT NO.			HIGHWAY NO.
Checked	DLG	6	TEXAS	NH 99(556)			U.S.183
Drawn	RP	STATE DIST. NO.	COUNTY	CONTROL NO.	SECTION NO.	JOB NO.	SHEET NO.
Checked	DLG	14	WILLIAMSON	0151	05	072	251

09:42:04
22 JUN 2001
t:\07401022\CNGORDER\PLOT\roadway\ponds\02925trw.dgn

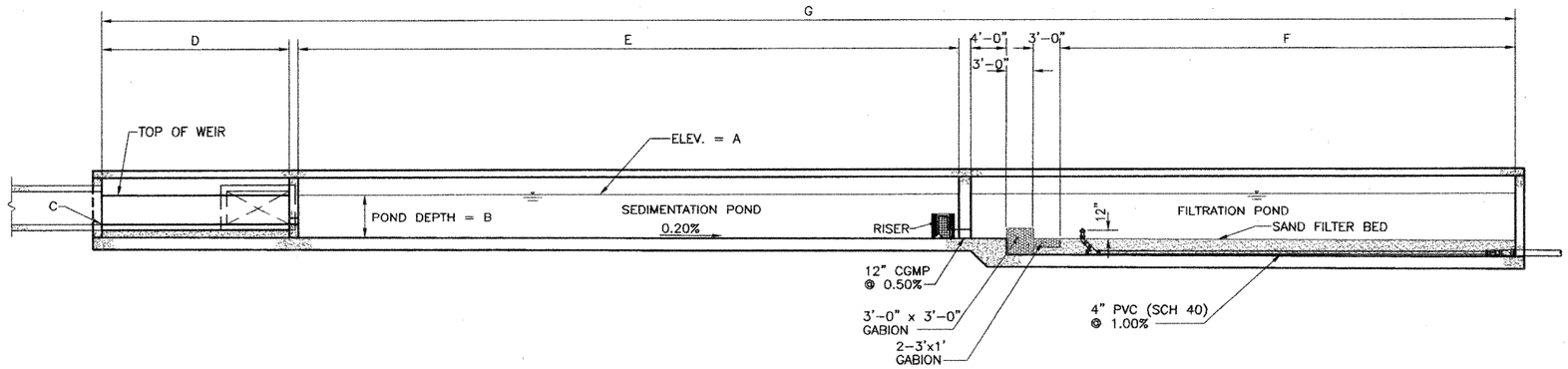

TYPICAL SECTION

SCALE: 1/8" = 1'-0"

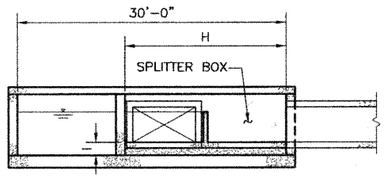

TYPICAL SECTION

SCALE: 1/8" = 1'-0"

POND	A	B	C	D ⚠1	E	F	G	H	I ⚠1	J
1A	917.78	5'-0"	914.28	N/A	96'-0"	29'-0"	158'-4"	18'-0"	N/A	2 3/8"
1B	921.00	5'-0"	918.50	14'-6"	76'-0"	24'-0"	126'-10"	10'-0" ⚠1	2'-6"	2 3/16"
1C	922.75	6'-0"	918.50	14'-6"	65'-0"	25'-0"	116'-10"	18'-0"	1'-9"	2 1/8"
2A	920.92	5'-0"	917.42	14'-6"	91'-0"	28'-0"	145'-10"	10'-0"	1'-6"	2 3/16"
2B	923.49	5'-0"	921.99	14'-6"	43'-0"	15'-0"	84'-10"	10'-0"	3'-6"	1 11/16"
2C	925.90	6'-6"	923.90	14'-6"	76'-0"	31'-0"	133'-10"	10'-0"	4'-6"	1 15/16"
2D1	923.63	5'-6"	920.63	21'-0"	109'-0"	37'-0"	179'-4"	12'-0"	2'-6"	2 5/8"
2D2	921.85	6'-0"	916.85	12'-0"	138'-0"	47'-0"	209'-3"	21'-0"	1'-0"	2 7/8"

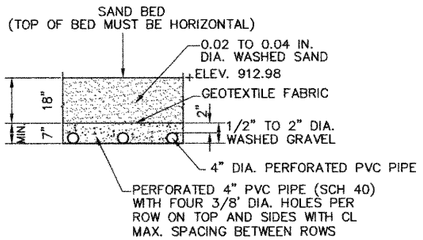

SAND FILTRATION BED SECTION

SCALE: 1/2" = 1'-0"

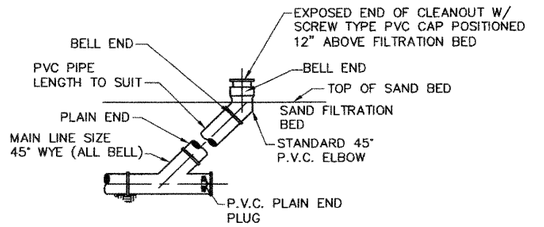

NOTE:
TO BE PLACED ON BEDDING MEETING SPECIFICATION FOR TYPE AND SIZE OF PIPE.

FILTRATION BED CLEAN-OUT

SCALE: 1/2" = 1'-0"

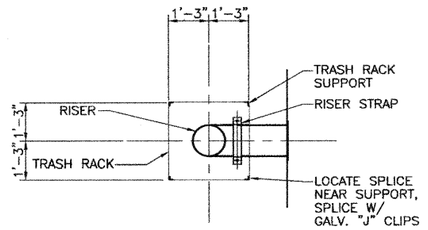

PLAN

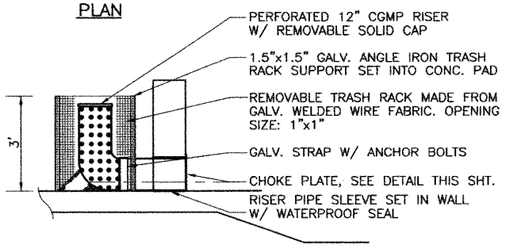

SECTION

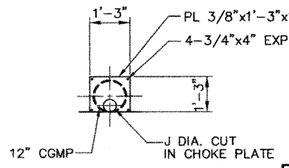

CHOKE PLATE DETAIL

RISER DETAIL

N.T.S.

STATE OF TEXAS
DAVID L. GARRETT
76626
REGISTERED
PROFESSIONAL ENGINEER
6/22/01
For Revision #1 Only

STATE OF TEXAS
REBECCA A. BILLS
82587
REGISTERED
PROFESSIONAL ENGINEER
Rebecca A. Bills
5-3-99

NOTES:

1. SEE WATER QUALITY PONDS STRUCTURAL DETAILS SHEETS 261a – 261d FOR POND DIMENSIONS AND REINFORCEMENT.
2. SEE STORM SEWER PROFILE SHEETS FOR FLOWLINES OF RCPs/RCBs AT SPLITTER BOX.

NO.	DATE	REVISION	APPROV.
4			
3			
2			
⚠1	6/01	CHANGE ORDER 10	

Turner Collie & Braden Inc.
ENGINEERS • PLANNERS • PROJECT MANAGERS

AUSTIN | Job No. 72-07401-022 | File

Texas Department of Transportation

© 1998 TxDOT

UNDERGROUND WATER QUALITY POND TYPICAL SECTIONS AND DETAILS

SCALE: AS NOTED

Designed	CH	FED. RD. DIV. NO.	STATE	FEDERAL AID PROJECT NO.				HIGHWAY NO.
Detailed	DLG	6	TEXAS	NH 99(556)				U.S.183
Checked	RP	STATE DIST. NO.	COUNTY	CONTROL NO.	SECTION NO.	JOB NO.	SHEET NO.	
Quantities	Q.	AUS	WILLIAMSON	0151	05	072	257	

0940103
2001
FILE: C:\07401022\CNGORDER\PLOT\roadway\boards\029257nw.dgn

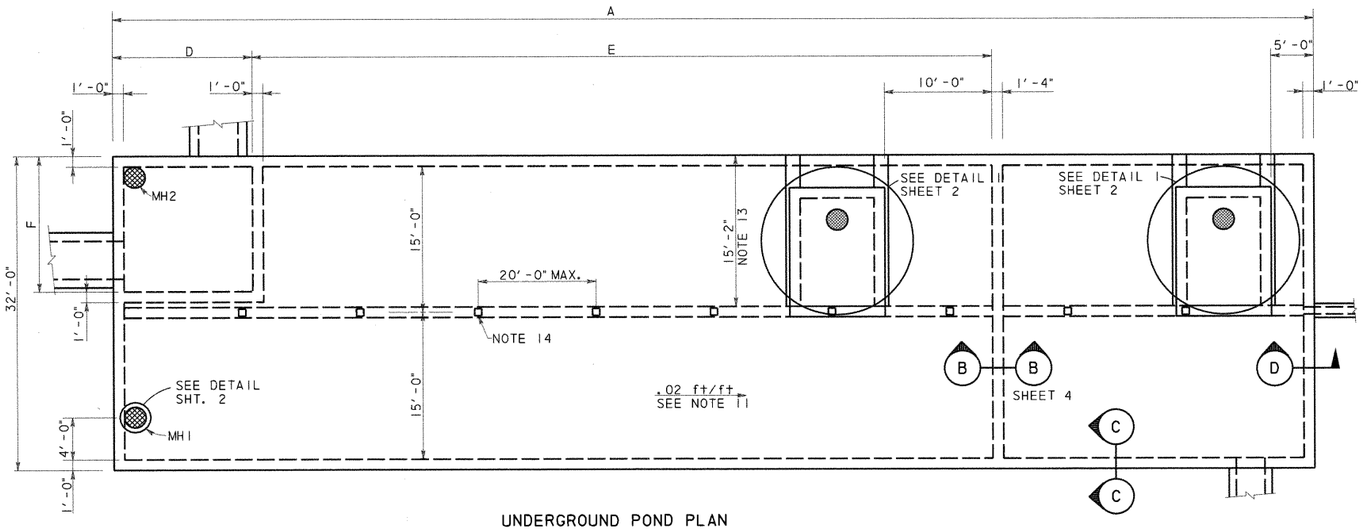

UNDERGROUND POND PLAN

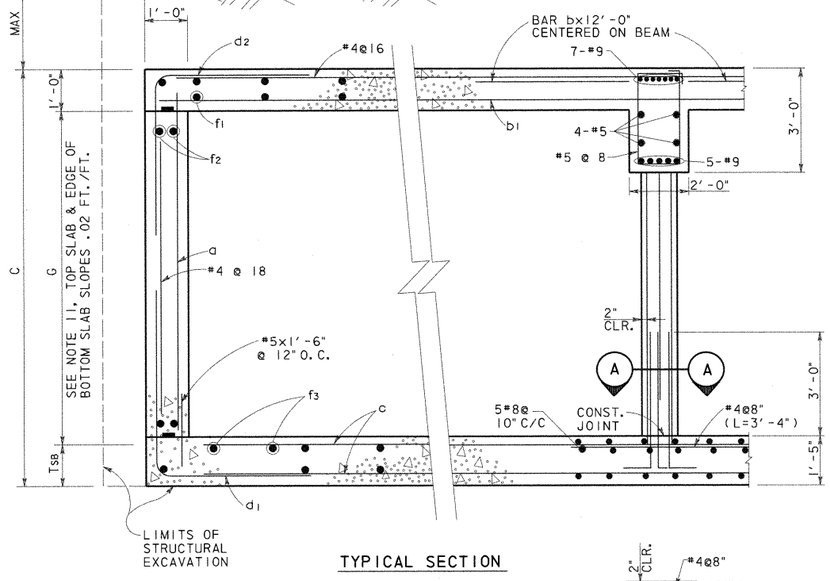

TYPICAL SECTION

SECTION C-C
N. T. S.

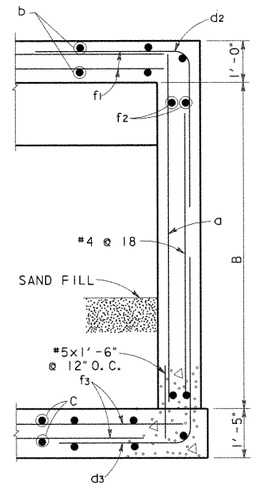

SECTION D-D
N. T. S.

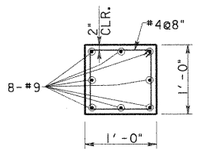

SECTION A-A
SCALE: 1"=1'-0"

UNDERGROUND POND REINFORCING TABLE																		
POND DESIGNATION	BARS a		BARS b		BARS b1		BARS c		BARS d1		BARS d2		BARS d3		BARS f1, f2, f3(#4)			
	SIZE	SPA.	SIZE	SPA.	SIZE	SPA.	SIZE	SPA.	SIZE	SPA.	SIZE	SPA.	SIZE	SPA.	f1 Spa.	f2 Spa.	f3 Spa.	
1A	#6	@12"	#8	@8"	#6	@8"	#8	@10"	#6	@6"	#6	@6"	#6	@6"	@6"	@12"	@7"	
1B	#6	@12"	#8	@8"	#6	@8"	#8	@10"	#6	@6"	#6	@6"	#6	@6"	@6"	@12"	@7"	
1C	#6	@12"	#8	@8"	#6	@8"	#8	@10"	#7	@6"	#6	@6"	#7	@6"	@6"	@12"	@7"	
2A	#6	@12"	#8	@8"	#6	@8"	#8	@10"	#6	@6"	#6	@6"	#6	@6"	@6"	@12"	@7"	
2B	#6	@12"	#8	@8"	#6	@8"	#8	@10"	#6	@6"	#6	@6"	#6	@6"	@6"	@12"	@7"	
2C	#7	@12"	#8	@8"	#6	@8"	#8	@10"	#7	@6"	#6	@6"	#8	@6"	@6"	@12"	@7"	
2D1	#7	@12"	#8	@8"	#6	@8"	#8	@10"	#7	@6"	#6	@6"	#8	@6"	@6"	@12"	@7"	
2D2	#7	@12"	#8	@8"	#6	@8"	#8	@10"	#7	@6"	#6	@6"	#8	@6"	@6"	@12"	@7"	

UNDERGROUND POND DIMENSION TABLE											
POND DESIGNATION	A	B	C	D	E	F	G			MAX FILL	AVERAGE FILL
1A	160'-4"	9'-2"	9'-3"	22'-0"	97'-0"	19'-0"	7'-0"			11'-0"	7'-6"
1B	128'-10"	9'-2"	9'-3"	15'-6"	77'-0"	11'-0"	7'-0"			8'-6"	5'-6"
1C	118'-10"	9'-8"	9'-9"	15'-6"	66'-0"	11'-0"	7'-6"			8'-3"	5'-6"
2A	147'-10"	9'-2"	9'-3"	15'-6"	92'-0"	11'-0"	7'-0"			9'-3"	6'-9"
2B	86'-10"	9'-2"	9'-3"	15'-6"	44'-0"	11'-0"	7'-0"			6'-9"	4'-9"
2C	133'-10"	10'-2"	10'-3"	15'-6"	77'-0"	11'-0"	8'-0"			4'-9"	3'-6"
2D1	181'-4"	10'-2"	10'-3"	22'-0"	110'-0"	13'-0"	8'-0"			11'-10"	7'-3"
2D2	211'-4"	10'-2"	10'-3"	13'-0"	139'-0"	22'-0"	8'-0"			9'-5"	7'-9"

GENERAL NOTES: UNDERGROUND PONDS

1. DESIGNED ACCORDING TO CURRENT AASHTO 1996 STANDARD SPECIFICATIONS.
2. DESIGNED FOR HS20 LOADING AND TO THE MAXIMUM FILL HEIGHT SHOWN.
3. ALL REINFORCING SHALL BE GRADE 60 KSI.
4. ALL CONCRETE SHALL BE CLASS "C".
5. REINFORCING BARS SHALL BE ADJUSTED TO PROVIDE A MINIMUM OF 1½" CLEAR COVER, UNLESS OTHERWISE NOTED.
6. ALL DIMENSIONS ARE IN FEET AND INCHES AND ALL MASS IS IN POUNDS UNLESS OTHERWISE NOTED.
7. SEE POND LAYOUT SHEETS FOR POND ORIENTATION AND LOCATION; PLUS THE ORIENTATION, SIZE AND LOCATION OF INCOMING AND OUTGOING DRAINAGE LINES.
8. WATERSTOPS SHALL BE HYDROPHILIC WATERSTOPS SUCH AS ADEKA MC-2010M.
9. PROVIDE 3" CLEARANCE WHERE CAST AGAINST SOIL.
10. PROVIDE CONSTRUCTION JOINTS IN WALLS AT A MAXIMUM SPACING OF 30 FOOT ON CENTER. MAXIMUM SLAB AREA TO BE PLACED WITHOUT CONSTRUCTION JOINTS IS 3000 SQUARE FEET. SLAB AND WALL CONSTRUCTION JOINTS SHALL ALIGN.
11. SEE POND LAYOUT FOR FLOWLINE. BOTTOM SLAB SHALL PROVIDE A .02 FT/FT SLOPE ALONG THE EDGE OF WALL. PERIMETER WALL HEIGHT (G) SHALL BE CONSTANT.
12. OFF SET RISER TO MISS ROOF SLAB BEAM.
13. AT UNDERGROUND PONDS 2C AND 2D2 THE ACCESS HATCH IS OPPOSITE HAND FROM WHAT IS SHOWN AND IS LOCATED FROM THE OPPOSITE WALL TO AVOID INTERFERENCE WITH THE DRAINAGE DITCH.
14. COLUMN SPACING IS 20.0 FT O.C. MAX. UNLESS NOTED OTHERWISE. THERE WILL BE NO COLUMNS WITHIN THE SPLITTER BOX, WHERE SPLITTER BOX EXTENDS TO THE ROOF BEAM OR BEYOND THE BEAM IS SUPPORTED BY THE SPLITTER BOX WALLS.
15. LAP TOP BARS @ MID SPAN AND BOTTOM BARS @ SUPPORTS.

ESTIMATED QUANTITIES*			
POND DESIGNATION	CONCRETE (CY)	REINFORCING BARS (LBS)	EXCAVATION (CY)
1A	623	144,925	
1B	505	115,855	
1C	476	109,213	
2A	572	131,682	
2B	356	82,752	
2C	536	123,427	
2D1	712	165,990	
2D2	823	191,615	

* QUANTITIES FOR CONTRACTOR'S ESTIMATE ONLY. ALL ITEMS ARE SUBSIDIERY TO THE POND ITEM.

STATE OF TEXAS
WILLY R. BURNS
44162
REGISTERED
ENGINEER
4/2/99

NO. DATE REVISION APPROVED

Turner Collie & Braden Inc.
Engineers • Planners • Project Managers

DATE SUTTON JOB NO. 62-14004-011 ADDENDUM

© 1998 Texas Department of Transportation

US 183

WATER QUALITY PONDS
STRUCTURAL DETAILS

SHEET 1 OF 11

Designed	WRB	FED. RD. DIV. NO.	STATE	FEDERAL AID PROJECT NO.				HIGHWAY NO.
Checked		6	TEXAS	NH99(556)				US 183
Drawn	MR	STATE DIST. NO.	COUNTY	CONTROL NO.	SECTION NO.	JOB NO.		SHEET NO.
Checked		14	WILLIAMSON	151	5	072		261a

UGPDTL1.DGN

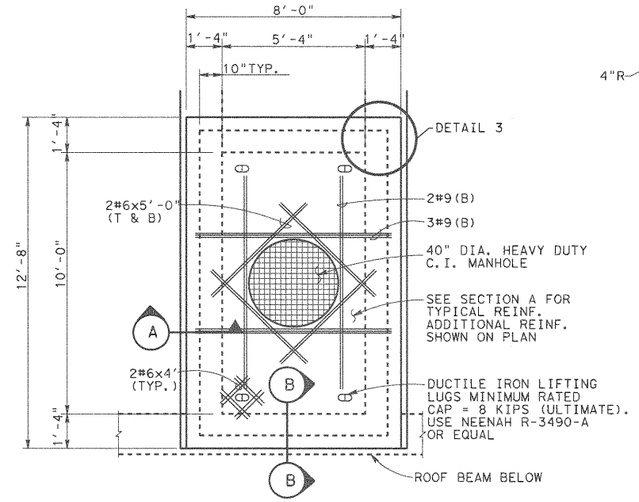

MAINTENANCE ACCESS HATCH

DETAIL 1

SCALE: 3/8" = 1'-0"

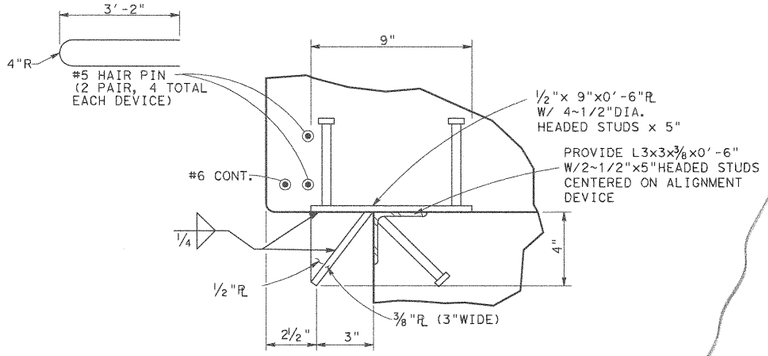

PROVIDE 8 DEVICES (GALV. AFTER FABRICATION) 2 EACH SIDE

DETAIL 2

ALIGNMENT DEVICE

SCALE: 3" = 1'-0"

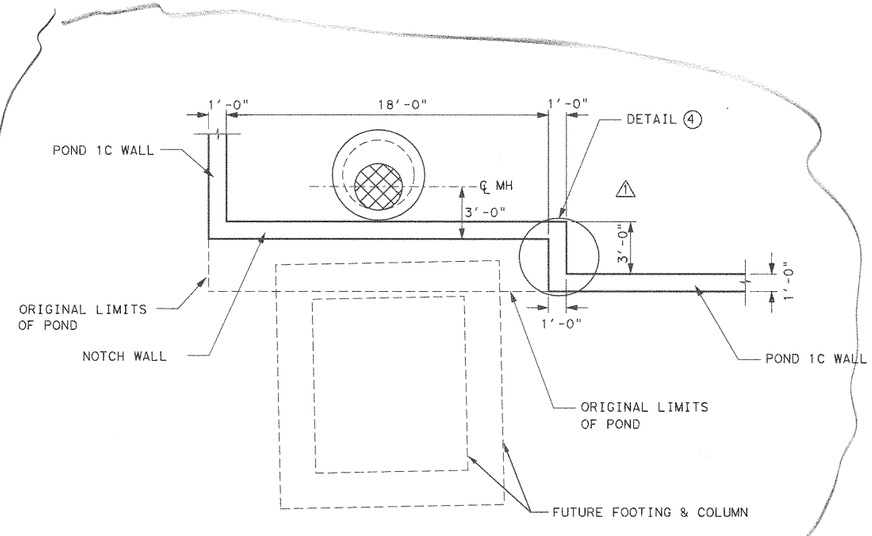

POND 1C MODIFICATION

SCALE: 3" = 1'-0"

SECTION A

SCALE: 1/2" = 1'-0"

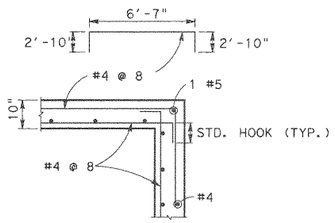

DETAIL 3

HORIZONTAL REINFORCEMENT

SCALE: 1/2" = 1'-0"

ACCESS HATCH		
POND	H1 (±)	ELEV. A
1A	8'-8"	929.20
1B	6'-7"	931.98
1C	6'-7"	931.62
2A	8'-4"	932.04
2B	5'-10"	932.20
2C	4'-10"	933.06
2D1	7'-4"	934.04
2D2	7'-11"	932.50

MANHOLE TABLE		
POND	H2	H3
1A	9'-0"	5'-0"
1B	9'-0"	4'-0"
1C	8'-0"	4'-0"
2A	9'-0"	4'-0"
2B	7'-0"	4'-0"
2C	3'-0"	5'-0"
2D1	10'-0"	4'-0"
2D2	7'-0"	5'-0"

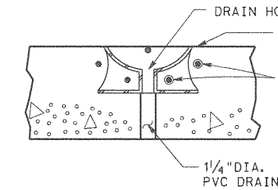

SECTION B

SCALE: 1"= 1'-0"

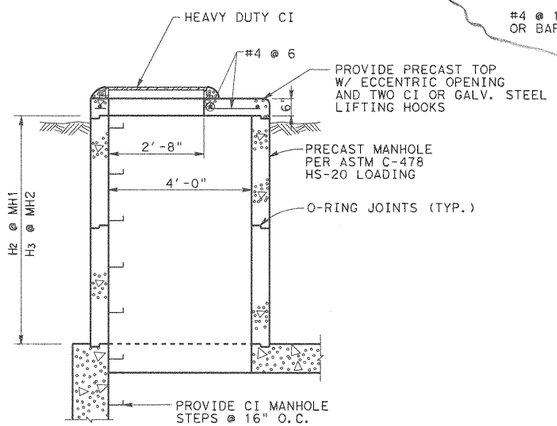

MANHOLE DETAIL

SCALE: 1/2" = 1'-0"

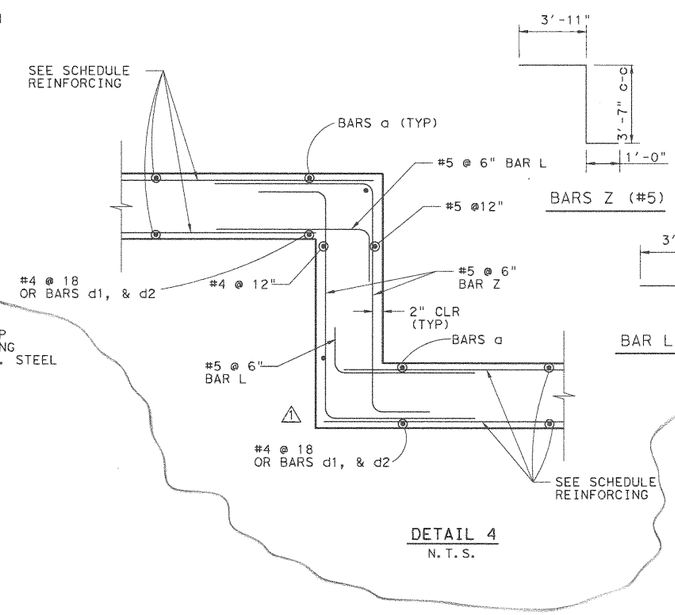

DETAIL 4

N.T.S.

STATE OF TEXAS
WALLY R. BURNS
44162
REGISTERED PROFESSIONAL ENGINEER
Wally R Burns
01/29/01

1	JAN. 26 01	ADD NOTCH	WRB
NO.	DATE	REVISION	APPROVED

Turner Collie & Braden Inc.
Engineers • Planners • Project Managers

TRANSPORTATION | Unit | Job No. 81-07401-024 | Approved

© 1998 Texas Department of Transportation

US 183
WATER QUALITY PONDS
STRUCTURAL DETAILS

SCALE: AS NOTED — SHEET 2 OF 11

Designed	Checked	Drawn	Checked	FED. RD. DIV. NO.	STATE	FEDERAL AID PROJECT NO.				HIGHWAY NO.
WRB		MR		6	TEXAS	NH99(556)				US 183
				STATE DIST. NO.	COUNTY	CONTROL NO.	SECTION NO.	JOB NO.		SHEET NO.
				14	WILLIAMSON	151	5	072		261b

UGPDT2.DGN

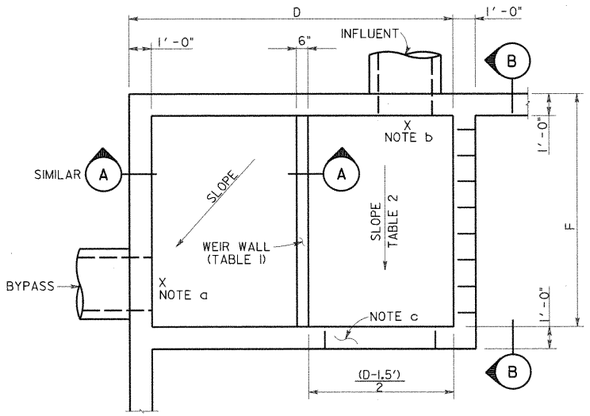

SEE TABLE SHEET I OF II
FOR DIMENSIONS D & F

SPLITTER BOX PLAN (POND 2D2)

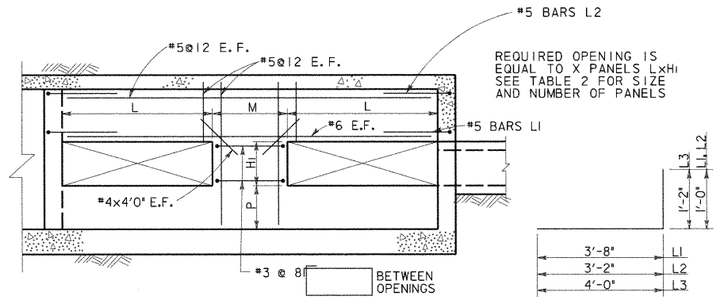

SECTION B

BARS L

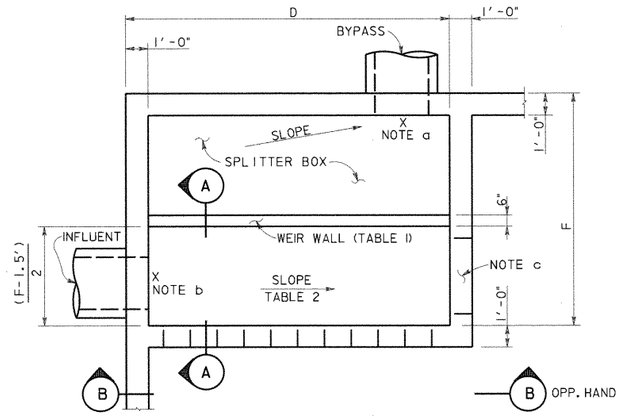

SEE TABLE SHEET I OF II
FOR DIMENSIONS D & F

SPLITTER BOX PLAN (TYPICAL)

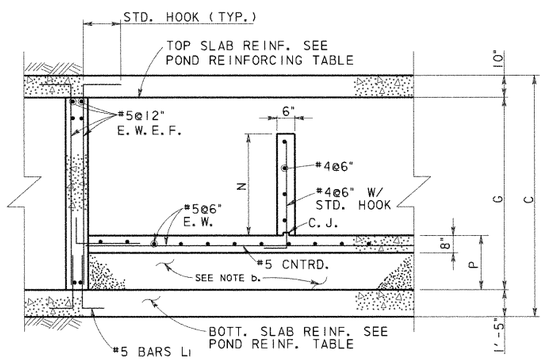

SECTION A

TABLE I BYPASS OUTFALL				
POND	BYPASS LINE ELEVATION	BYPASS WEIR		
		TOP OF WALL ELEV.	N*	P
1A	914.23	917.78	3'-6"	1'-6"
1B	918.44	921.00	2'-6"	2'-6"
1C	918.39	922.75	4'-3"	1'-9"
2A	917.38	920.92	3'-6"	1'-6"
2B	921.92	923.49	1'-6"	3'-6"
2C	923.82	925.90	2'-0"	4'-6"
2D1	920.53	923.63	3'-0"	2'-6"
2D2	916.71	921.85	5'-0"	1'-0"

*N IS MINIMUM DIMENSION, SPLITTER BOX FLOOR SLOPES, HOLD TOP OF WEIR WALL CONSTANT.

TABLE 2 INFLUENT LINE						
POND	INFLUENT ELEV.	SLOPE %	INFLUENT WALL			
			OPENINGS X	M	L	HI
1A	914.28	0.29	4	3'-0"	3'-0"	2'-6"
1B	918.50	0.48	3	2'-9"	3'-0"	1'-6"
1C	918.50	0.85	3	2'-9"	3'-0"	1'-6"
2A	917.42	0.33	3	2'-9"	3'-0"	1'-6"
2B	921.99	0.54	1	0	14'-8"	0'-9"
2C	923.90	0.62	3	2'-9"	3'-0"	1'-0"
2D1	920.63	0.53	3	6'-0"	3'-0"	2'-0"
2D2	916.85	0.78	4	3'-8"	2'-6"	2'-0"

NOTES:

a. SEE TABLE I THIS SHEET FOR OUT FLOW ELEVATION. SLOPE SLAB FROM OVERFLOW WEIR TO OUTFALL.

b. SEE TABLE 2 FOR INFLUENT ELEVATION. TOP OF SPLITTER BOX SLAB TO MATCH INFLOW ELEVATION. AT POND 2D1 THE ELEVATION SHOWN REPRESENTS A 6" DROP FROM THE INFLUENT FLOWLINE. CONTRACTOR MAY USE CEMENT STABILIZED SAND UNDER THE SLAB OR PLACE CONCRETE FOR THE FILL.

c. PROVIDE 3'x .75' OPENING AT BOTTOM OF SPLITTER BOX WALL AT END OF CHANNEL.

STATE OF TEXAS
WILLY R. BURNS
54103
REGISTERED
PROFESSIONAL ENGINEER
4/28/99

NO.	DATE	REVISION	APPROVED

Turner Collie & Braden Inc.
Engineers • Planners • Project Managers

SUTTON — Job No. 62-14004-011

© 1998 Texas Department of Transportation

US 183
WATER QUALITY PONDS
STRUCTURAL DETAILS

SCALE: AS NOTED — SHEET 3 OF 11

Designed	WRB	FED. RD. DIV. NO.	STATE	FEDERAL AID PROJECT NO.				HIGHWAY NO.
Checked		6	TEXAS	NH99(556)				US 183
Drawn	MR	STATE DIST. NO.	COUNTY	CONTROL NO.	SECTION NO.	JOB NO.		SHEET NO.
Checked		14	WILLIAMSON	151	5	072		261c

UGPDT3.DGN

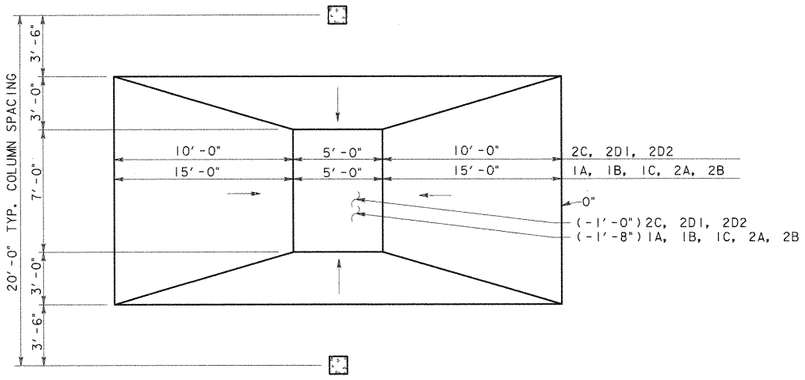

PLAN

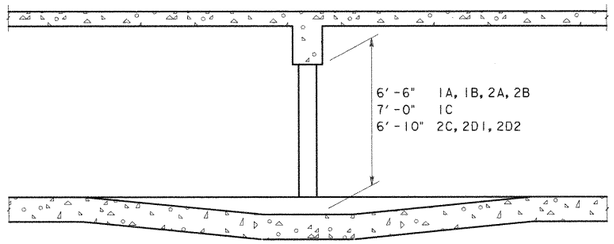

SECTION

REINFORCING LAP SPLICE & EMBEDMENT SCHEDULE						
BAR SIZE	MIN LAP LENGTH		MIN EMBEDMENT LENGTH			
	TOP BARS	OTHER BARS	TOP BARS		OTHER BARS	
			STR.	STD. HOOK	STR.	STD. HOOK
4	24"	20"	17"	9"	12"	7"
5	30"	24"	21"	10"	15"	8"
6	36"	28"	25"	10"	18"	8"
8	58"	41"	42"	15"	30"	12"

PROVIDE ONE CROSS OVER DETAIL FOR E ≤ 80'
PROVIDE TWO CROSS OVER DETAILS FOR E > 80'

CROSS OVER DETAIL
SCALE: 1/4" = 1'-0"

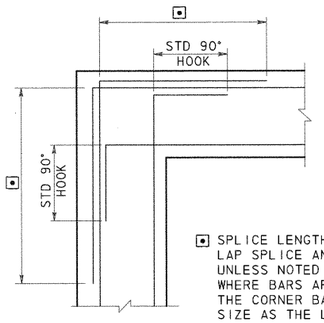

⊡ SPLICE LENGTH SEE REINFORCING LAP SPLICE AND EMBEDMENT TABLES. UNLESS NOTED OTHERWISE ON DWGS WHERE BARS ARE DIFFERENT SIZE THE CORNER BAR SHALL BE SAME SIZE AS THE LARGER BAR

CORNER REINFORCING
FOR WALLS OR GRADE BEAMS

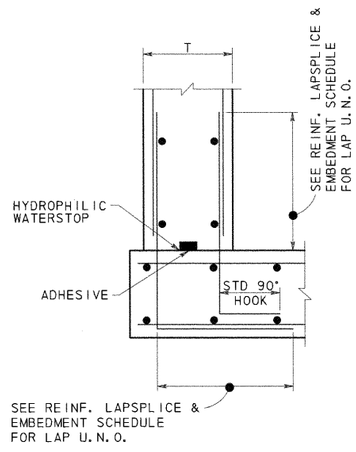

CONSTRUCTION JOINT
BASE OF WALLS

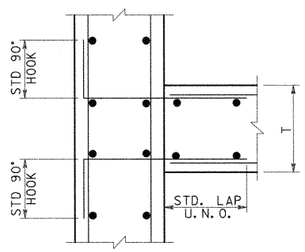

CONSTRUCTION JOINT
WALL INTERSECTIONS

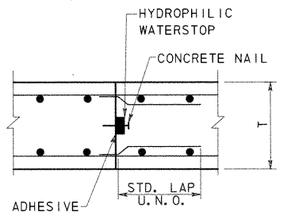

CONSTRUCTION JOINT
SLABS

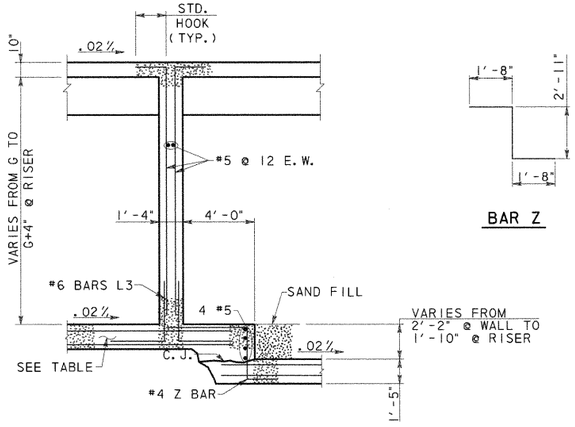

SECTION B

BAR Z

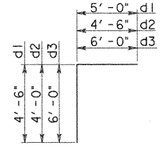

BARS D

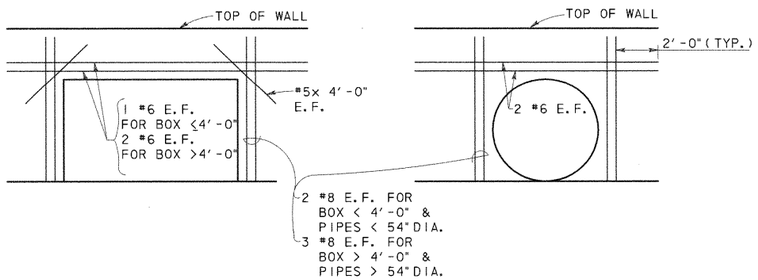

ADDITIONAL REINFORCING @ OPENINGS



NO.	DATE	REVISION	APPROVED

Turner Collie & Braden Inc.
Engineers • Planners • Project Managers

DATE: SUTTON | JOB NO. 62-14004-011 | APPROVED

© 1998 Texas Department of Transportation

US 183
WATER QUALITY PONDS
STRUCTURAL DETAILS

SCALE: AS NOTED | SHEET 4 OF 11

DESIGNED	CHECKED	DRAWN	CHECKED	FED. RD. DIV. NO.	STATE DIST. NO.	STATE	COUNTY	FEDERAL AID PROJECT NO. CONTROL NO.	SECTION NO.	JOB NO.	SHEET NO.	HIGHWAY NO.
WRB		MR		6	14	TEXAS	WILLIAMSON	NH99(556) 151	5	072	261d	US 183

UGPDT4.DGN

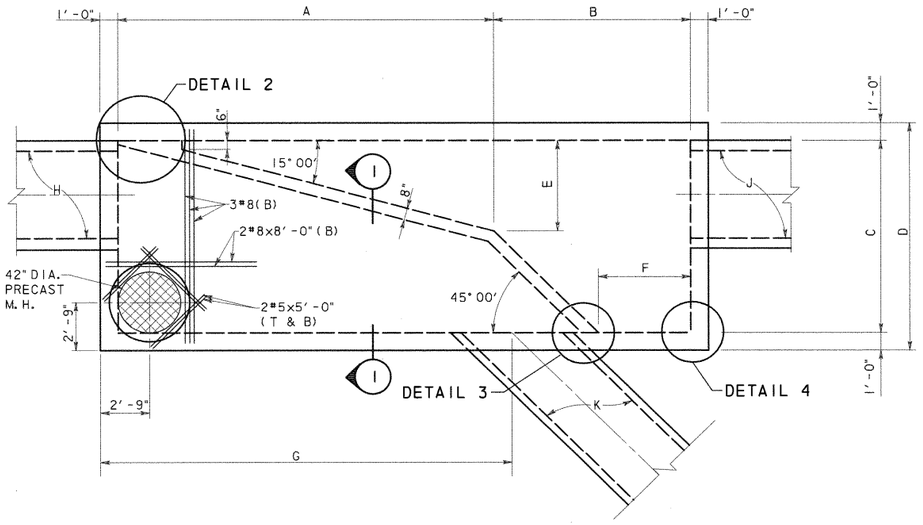

SPLITTER BOX DIMENSION TABLE

BOX LOCATION	A	B	C	D	E	F	G	H	J	K
POND SPRINGS	21'-0"	11'-0"	11'-0"	13'-0"	5'-2"	5'-2"	22'-0"	6x5 RCB	6x5 RCB	4x4 RCB
620 LEFT SIDE	13'-9"	8'-9"	8'-0"	10'-0"	3'-2"	4'-1"	13'-7"	*48" RCP	4x4 RCB	48" RCP

*48" RCP @ 15° SKEW
SEE DRAINAGE DETAIL SHEET.

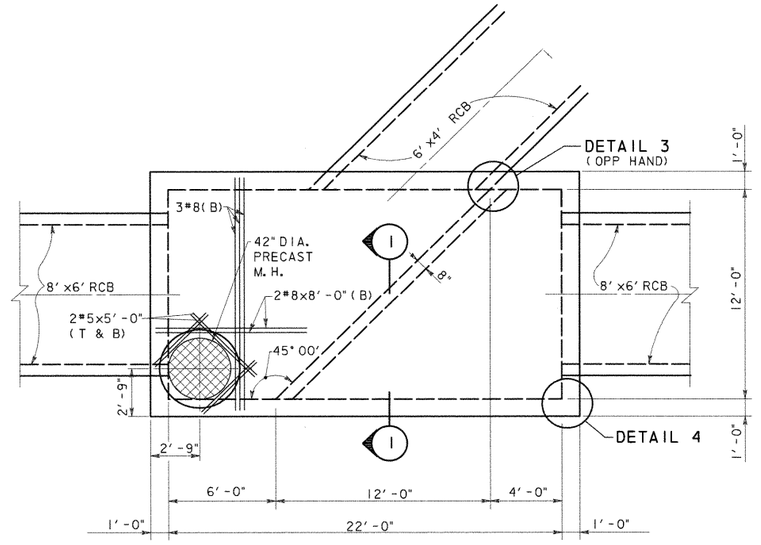

620 RIGHT SIDE
PLAN VIEW
SCALE: 1/4" = 1'-0"

ESTIMATED QUANTITIES			
BOX	CONCRETE (YD^3) *	REINFORCING (LBS) *	STRUCTURAL EXCAVATION (YD)
POND SPRINGS	56.8	7,964	
620 LEFT	32.5	4,096	
620 RIGHT	48.8	5,877	

* QUANTITIES FOR CONTRACTOR'S ESTIMATE ONLY. ALL ITEMS ARE SUBSIDIARY TO THE SPLITTER BOX.

PLAN VIEW
SCALE: 1/4" = 1'-0"

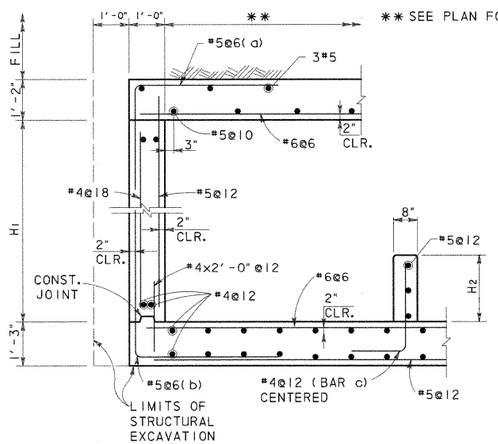

SECTION 1
SCALE: 1/2" = 1'-0"

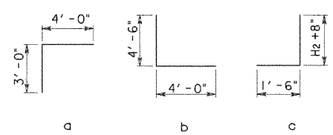

BOX LOCATION	H1	H2
POND SPRINGS	5'-6"	3'-0 1/2"
620 LEFT SIDE	4'-6"	2'-6"
620 RIGHT SIDE	6'-8"	1'-3"

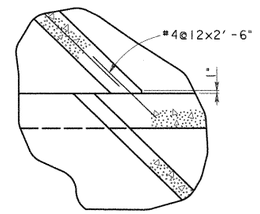

DETAIL 3
SCALE: 1/2" = 1'-0"

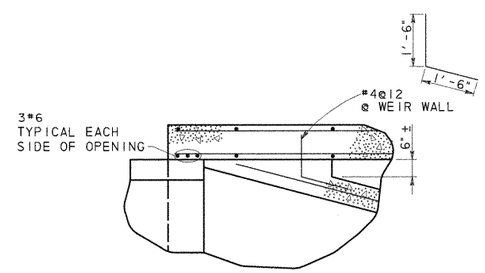

DETAIL 2
SCALE: 1/2" = 1'-0"

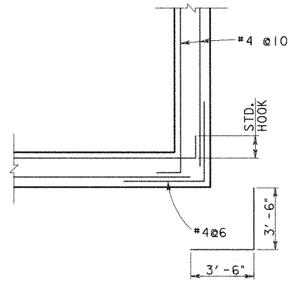

DETAIL 4
SCALE: 1/2" = 1'-0"

GENERAL NOTES:

1. DESIGNED ACCORDING TO CURRENT AASHTO 1996 STANDARD SPECIFICATIONS.
2. DESIGNED FOR HS20 LOADING AND TO THE MAXIMUM FILL HEIGHT SHOWN.
3. ALL REINFORCING SHALL BE GRADE 60 KSI.
4. ALL CONCRETE SHALL BE CLASS "C".
5. ALL DIMENSIONS ARE IN FEET AND INCHES AND ALL MASS IS IN POUNDS UNLESS OTHERWISE NOTED.



NO.	DATE	REVISION	APPROVED

Turner Collie & Braden Inc.
Engineers • Planners • Project Managers

DATE: SUTTON | JOB NO. 62-14004-011 | APPROVED

© 1998 Texas Department of Transportation

US 183
WATER QUALITY PONDS
STRUCTURAL DETAILS

SCALE: AS NOTED | SHEET 6 OF 11

Designed	WRB	FED. RD. DIV. NO.	STATE	FEDERAL AID PROJECT NO.				HIGHWAY NO.
Checked		6	TEXAS	NH99(556)				US 183
Drawn	MR	STATE DIST. NO.	COUNTY	CONTROL NO.	SECTION NO.	JOB NO.		SHEET NO.
Checked		14	WILLIAMSON	151	5	072		261f

UGPDT6.DGN

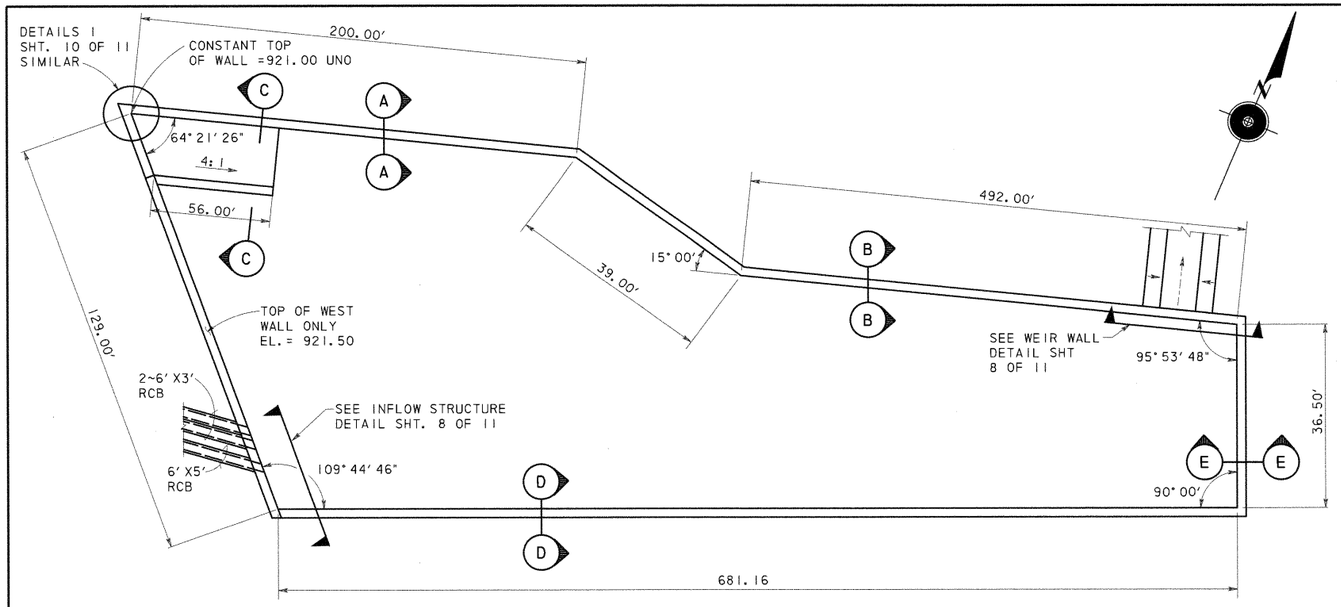

SYSTEM 3 DETENTION POND PLAN

ESTIMATED QUANTITIES (SECTION A)		
CONCRETE (YD^3) *	REINFORCING (LBS) *	** SQ. FT.
2,626	771,900	24,431

* QUANTITIES FOR CONTRACTOR'S ESTIMATE ONLY.

** EXPOSED FACE

*** WALL REINFORCING FOR 32' PANEL (SECT. A)									
A1 ~ 26 #5 @ 15" c-c		A2 ~ 25 #6 @ 15" c-c		A3 ~ 25 #7 @ 15" c-c		A4 ~ 26 #9 @ 15" c-c		A5 ~ 25 #9 @ 15" c-c	
Lgth	lb	Lgth	lb	Lgth	lb	Lgth	lb	Lgth	lb
129	292	145	455	218	928	188	1384	118	837

*** ONE SIDE SHOWN, BARS A BOTH SIDES

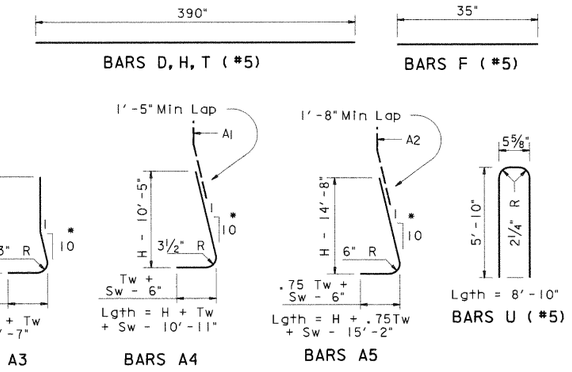

* A BARS ARE STRAIGHT IN FRONT FACE.

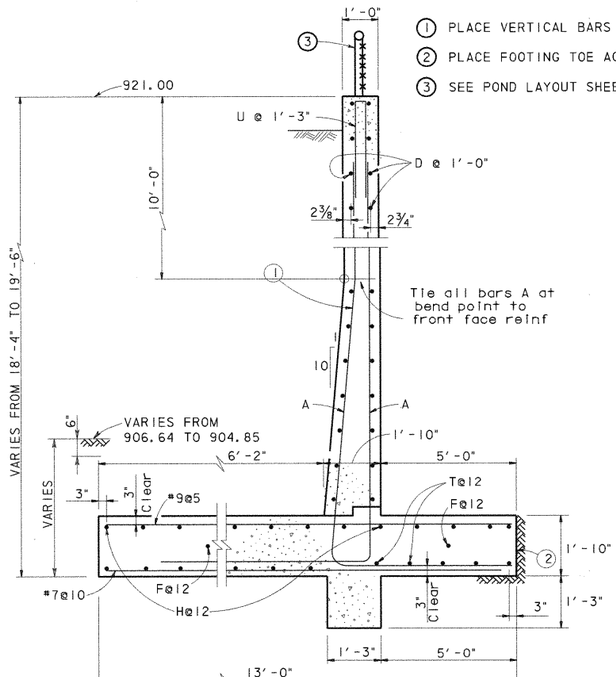

SECTION A-A
SCALE: ½" = 1'-0"

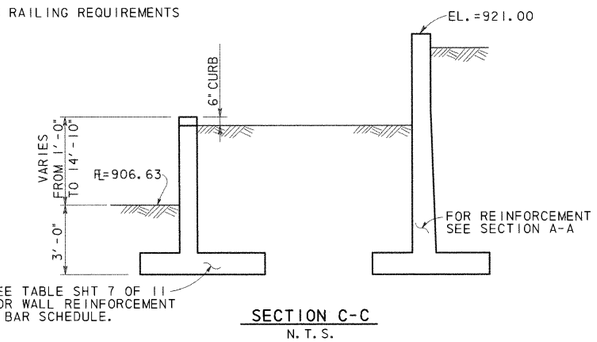

SECTION C-C
N.T.S.

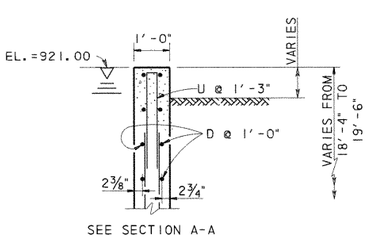

SEE SECTION A-A FOR REST OF DETAIL

SECTION D-D
SCALE: ½" = 1'-0"

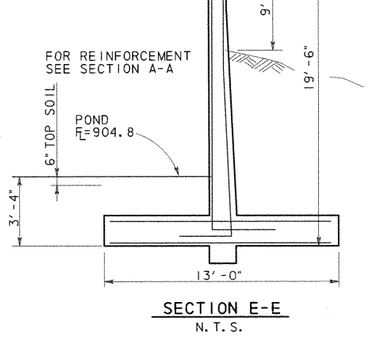

SECTION E-E
N.T.S.

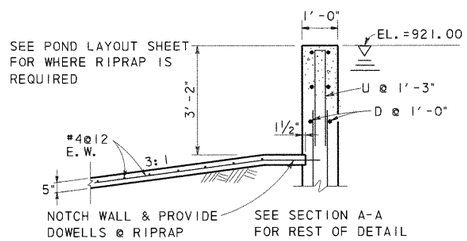

SECTION B-B
SCALE: ½" = 1'-0"

ELEVATION

GENERAL NOTES:

1. DESIGNED ACCORDING TO CURRENT AASHTO 1996 STANDARD SPECIFICATIONS.
2. DESIGNED FOR HS20 LOADING AND EQUIVALENT SOIL PRESSURE OF 60 PCF.
3. ALL REINFORCING SHALL BE GRADE 60 KSI.
4. ALL CONCRETE SHALL BE CLASS "A".
5. REINFORCING BARS SHALL BE ADJUSTED TO PROVIDE A MINIMUM OF 1½" CLEAR COVER.
6. ALL DIMENSIONS ARE IN FEET AND INCHES AND ALL MASS IS IN POUNDS UNLESS OTHERWISE NOTED.
7. CONSTRUCTION JOINT SHALL BE AT 32 FT. MAX. OC. PROVIDE CONSTRUCTION AT 15' MAX FROM EACH CORNER. CORNER CLOSURES SHALL BE PLACED LAST.
8. PROVIDE AN EXPANSION JOINT AFTER MAXIMUM OF 3 PANELS.
9. SEE SHEET 11 OF 11 FOR CONSTRUCTION AND EXPANSION JOINT DETAILS.

STATE OF TEXAS
WALLY R. BURNS
44162
REGISTERED PROFESSIONAL ENGINEER
4/28/99

NO.	DATE	REVISION	APPROVED

Turner Collie & Braden Inc.
Engineers • Planners • Project Managers

SUTTON | Job No. 62-14004-011 | Approved

© 1998 Texas Department of Transportation

US 183
WATER QUALITY PONDS
STRUCTURAL DETAILS

SCALE: AS NOTED | SHEET 7 OF 11

Designed	Checked	Drawn	Checked	FED. RD. DIV. NO.	STATE DIST. NO.	STATE	COUNTY	CONTROL NO.	SECTION NO.	JOB NO.	HIGHWAY NO. / SHEET NO.
WRB		MR		6	14	TEXAS	WILLIAMSON	151	5	072	US 183 / 261g

FEDERAL AID PROJECT NO. NH99(556)

UGPDT7.DGN

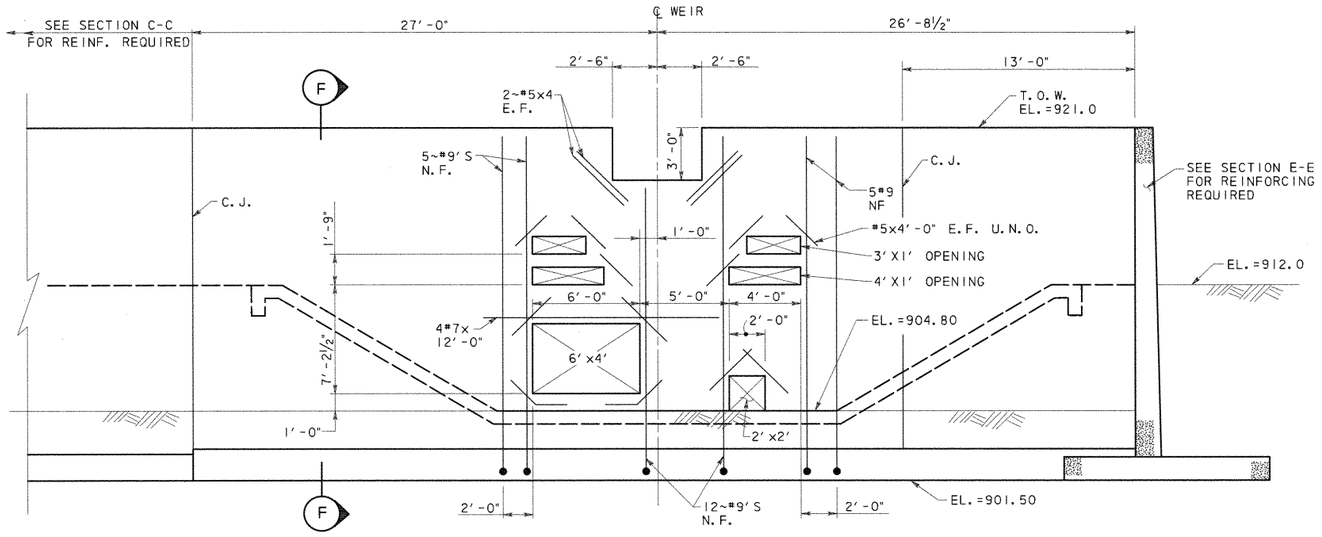

ADDITIONAL REINFORCING SHOWN, SEE SECTION F FOR TYPICAL REINF.

WEIR WALL DETAIL

SCALE: ¼" = 1'-0"

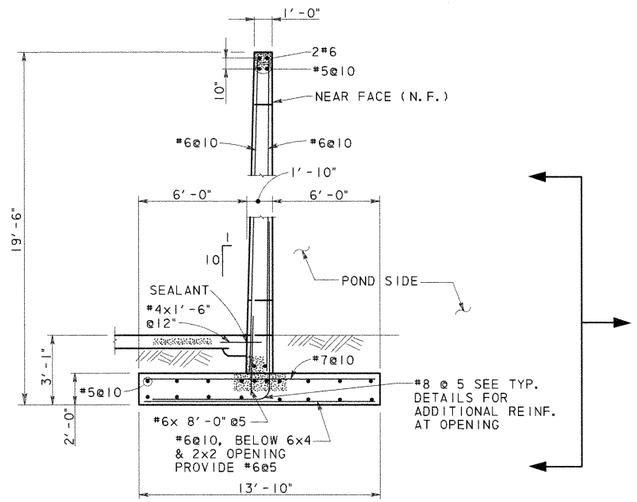

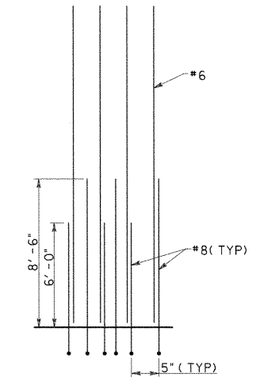

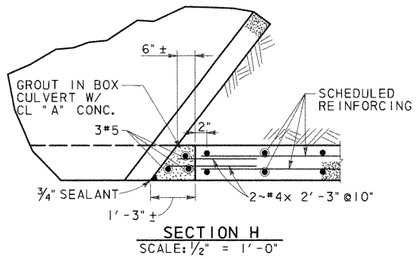

SECTION H

SCALE: ½" = 1'-0"

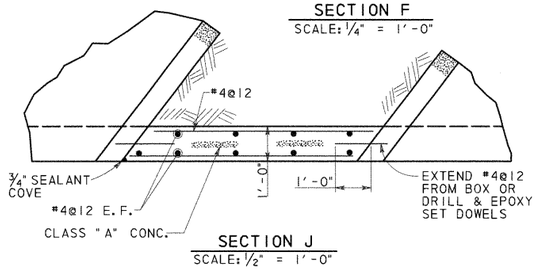

SECTION J

SCALE: ½" = 1'-0"

SECTION F

SCALE: ¼" = 1'-0"

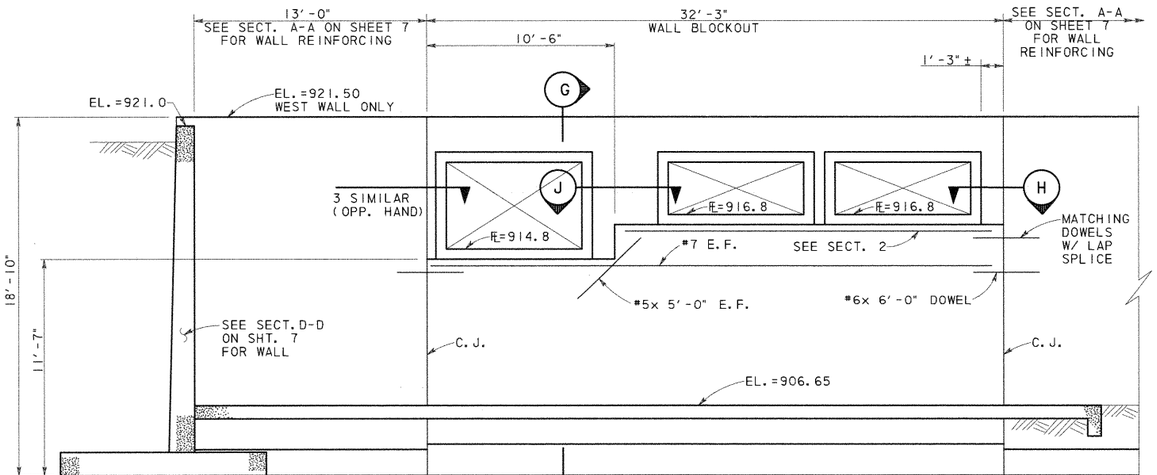

INFLOW STRUCTURE DETAIL

SCALE: ¼" = 1'-0"

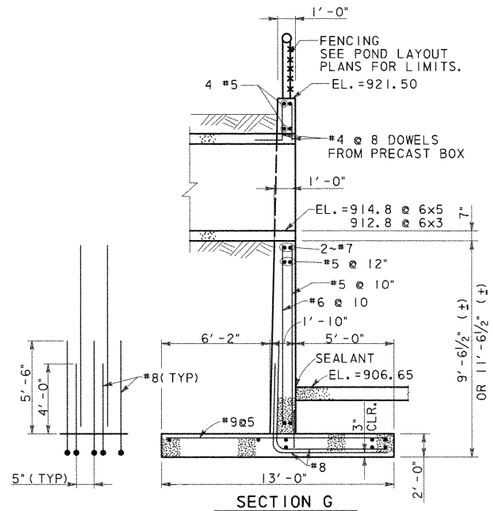

SECTION G

SCALE: ¼" = 1'-0"

STATE OF TEXAS · WALLY R. BURNS · 64262 · REGISTERED PROFESSIONAL ENGINEER

Wally R. Burns 4/28/99

NO.	DATE	REVISION	APPROVED

Turner Collie & Braden Inc.

Engineers • Planners • Project Managers

SUTTON | Job No. 62-14004-011 | Approved

© 1998 Texas Department of Transportation

US 183

WATER QUALITY PONDS STRUCTURAL DETAILS

SCALE: AS NOTED — SHEET 8 OF 11

Designed WRB	Fed. Rd. Div. No. 6	State TEXAS	Federal Aid Project No. NH99(556)	Highway No. US 183
Checked				
Drawn MR	State Dist. No. 14	County WILLIAMSON	Control No. 151	Section No. 5
Checked				Job No. 072

Sheet No. 261h

UGPDT8.DGN

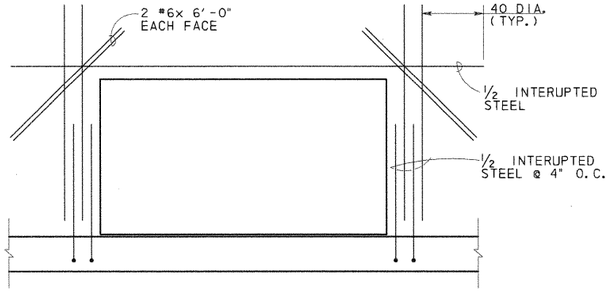

CULVERT OPENINGS

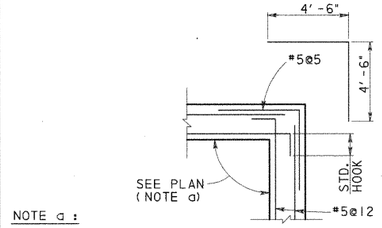

NOTE a :

SEE 620 MEDIAN POND (SHT. 5 OF 11), SYSTEM 3 POND (SHT. 7 OF 11)

DETAIL 1
SCALE: 1/2" = 1'-0"

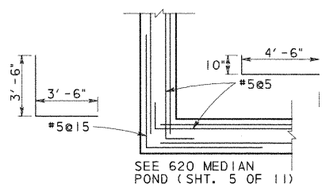

DETAIL 2
SCALE: 1/2" = 1'-0"

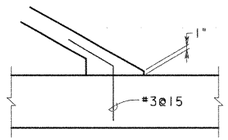

DETAIL 3
SCALE: 3/4" = 1'-0"

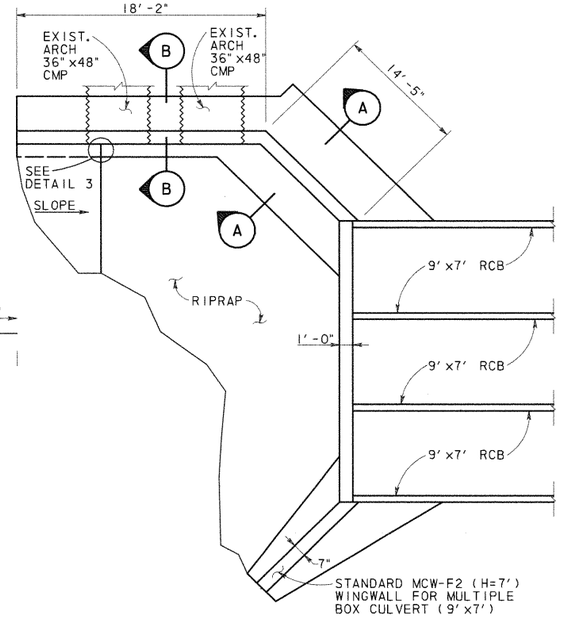

CULVERT @ POND SPRINGS PLAN
N. T. S.

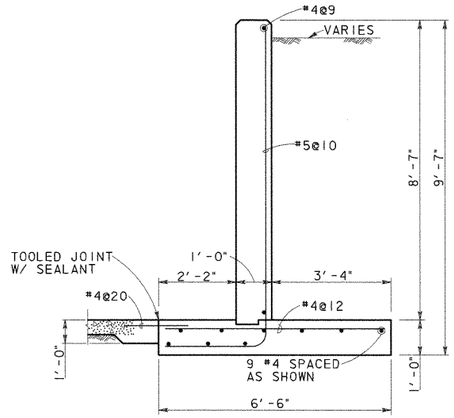

SECTION A-A
SCALE: 1/2" = 1'-0"

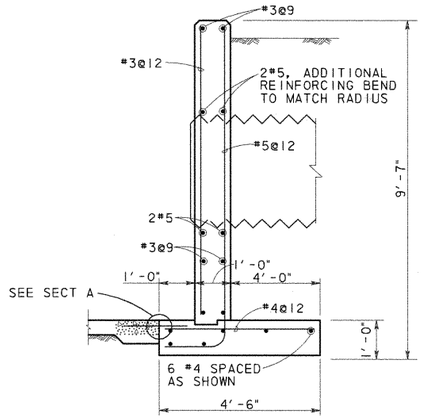

SECTION B-B
SCALE: 1/2" = 1'-0"

POND SPRINGS HEADWALL ESTIMATE QUANTITIES	
CONCRETE (YD^3) *	REINFORCING (LB) *
20.8	672

* QUANTITIES FOR CONTRACTOR'S INFORMATION ONLY. QUANTITIES SHOWN DO NOT INCLUDE THE .5 MCW-F2 WINGWALL OR THE CULVERT CURB.

THE HEADWALL SHALL BE PAID FOR AS MCW-F2(SPL).

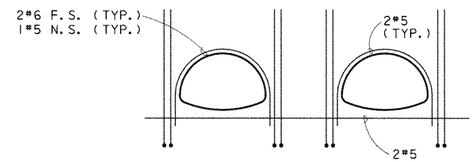

ADDITIONAL REINFORCMENT SHOWN. SEE SECTION B FOR TYPICAL

ELEVATION @ ARCH PIPE
N. T. S.

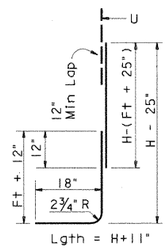

BARS B

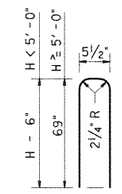

BARS U

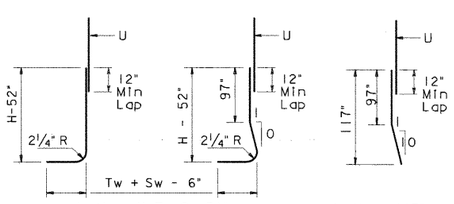

BARS A1

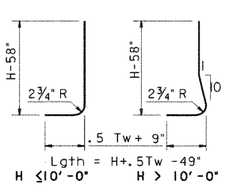

BARS A2

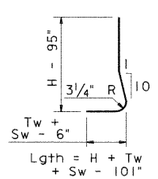

BARS A3

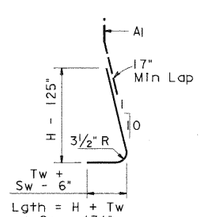

BARS A4

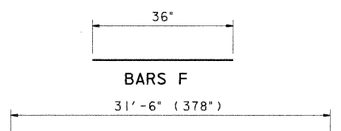

BARS D, H, T

BAR DETAILS POND SPRING

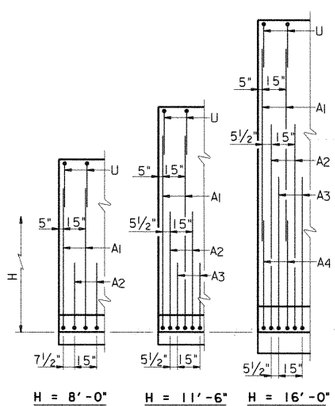

PARTIAL WALL ELEVATIONS
(Showing vertical reinforcing pattern in back face)

STATE OF TEXAS
WILLY R. BURNS
44162
REGISTERED
PROFESSIONAL ENGINEER
6/8/98

NO.	DATE	REVISION	APPROVED

Turner Collie & Braden Inc.
Engineers • Planners • Project Managers

TRANSPORTATION | Job No. 81-07401-024 | Approved

© 1998 Texas Department of Transportation

US 183
MISCELLANEOUS
WATER QUALITY PONDS
STRUCTURAL DETAILS

SCALE: AS NOTED | SHEET 10 OF 11

Designed	WRB	FED. RD. DIV. NO.	STATE	FEDERAL AID PROJECT NO.				HIGHWAY NO.
Checked		6	TEXAS	NH99(556)				US 183
Drawn	MR	STATE DIST. NO.	COUNTY	CONTROL NO.	SECTION NO.	JOB NO.		SHEET NO.
Checked		14	WILLIAMSON	151	5	072		261J

UGPDT10.DGN

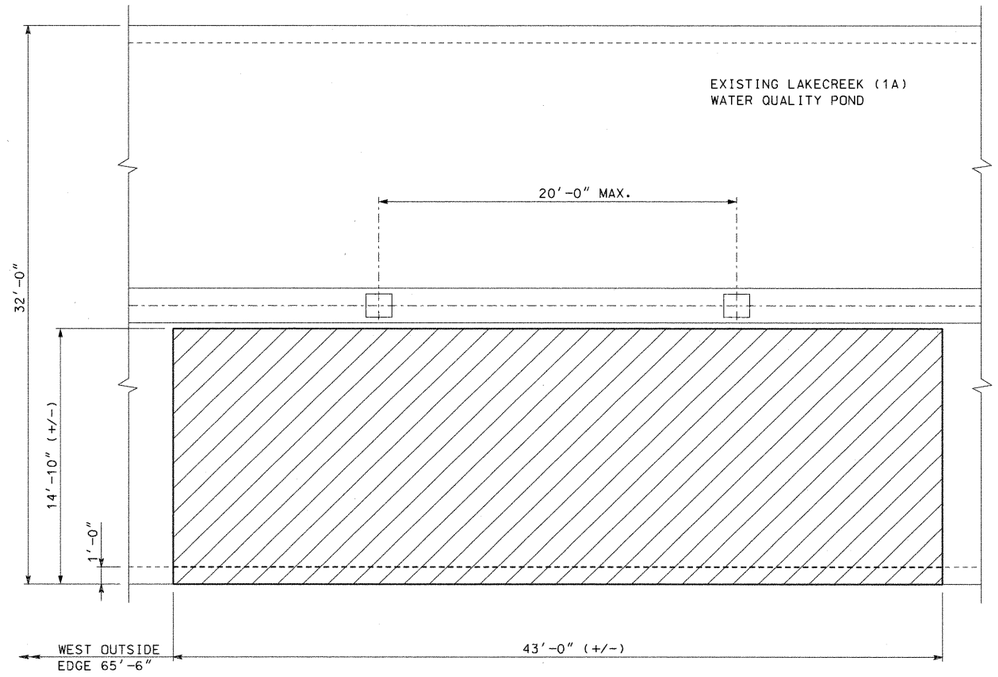

DEMOLITION PLAN
SCALE: 1/4" = 1'-0"

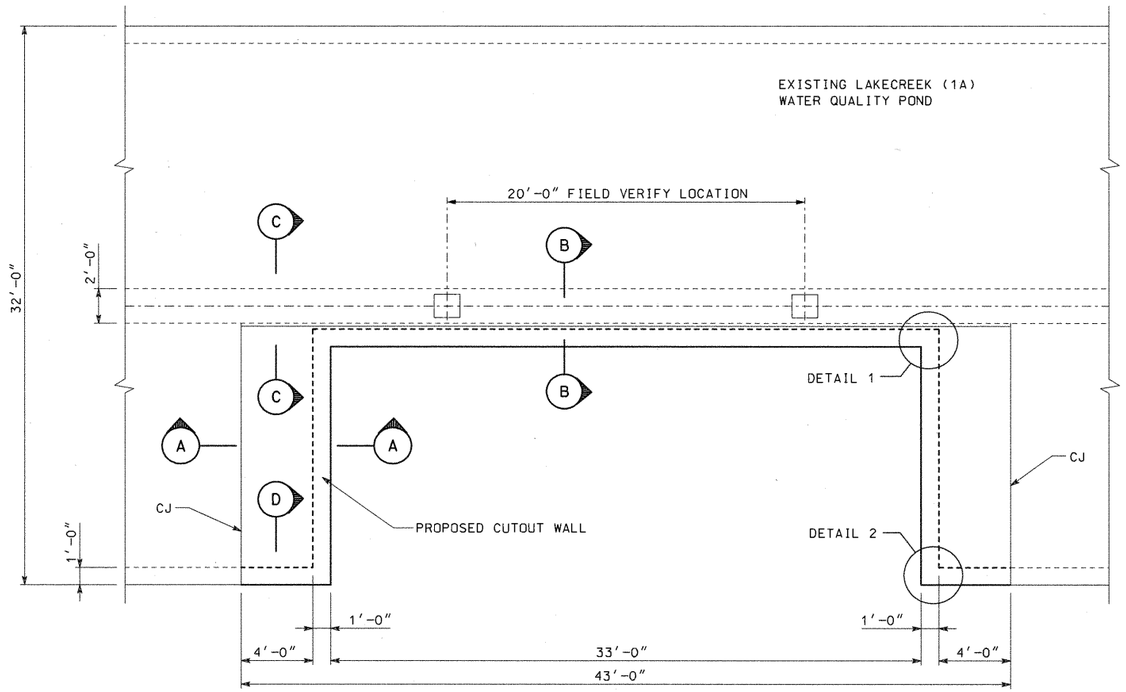

PARTIAL PLAN
SCALE: 1/4" = 1'-0"

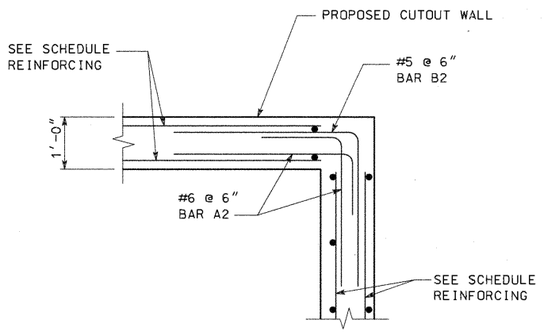

DETAIL 1
SCALE: 3/8" = 1'-0"

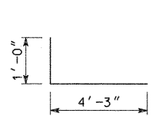

BARS A1 (#6)

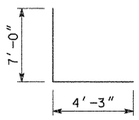

BAR B1 (#6)

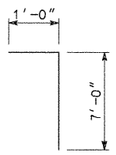

BAR A2 (#6)

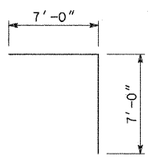

BAR B2 (#5)

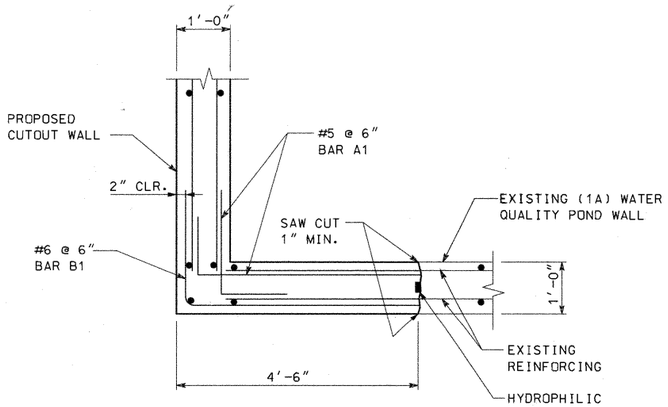

DETAIL 2

NOTES:

1. DESIGN IN ACCORDANCE WITH AASHTO 1996 STANDARD SPECIFICATIONS FOR HS-20 LOADING.
2. ALL CONCRETE SHALL BE CLASS "C".
3. WATERSTOPS SHALL BE HYDROPHILIC WATERSTOPS.

STATE OF TEXAS
WILLY R. BURNS
44162
REGISTERED
PROFESSIONAL ENGINEER
11/21/00

NO.	DATE	REVISION	APPROVED
		Change Order No 10A	

Turner Collie & Braden Inc.
Engineers • Planners • Project Managers

Date		Job No.	Approved
TRANSPORTATION		81-07401-024	

© 1998 Texas Department of Transportation

US 183
LAKECREEK
CUTOUT WALL
STRUCTURAL DETAILS

SHEET 1 OF 2

Designed	WRB	FED. RD. DIV. NO.	STATE	FEDERAL AID PROJECT NO.					HIGHWAY NO.
Checked		6	TEXAS	NH99(556)					US 183
Drawn	JAF	STATE DIST. NO.	COUNTY		CONTROL NO.	SECTION NO.	JOB NO.		SHEET NO.
Checked		14	WILLIAMSON		151	5	072		261K

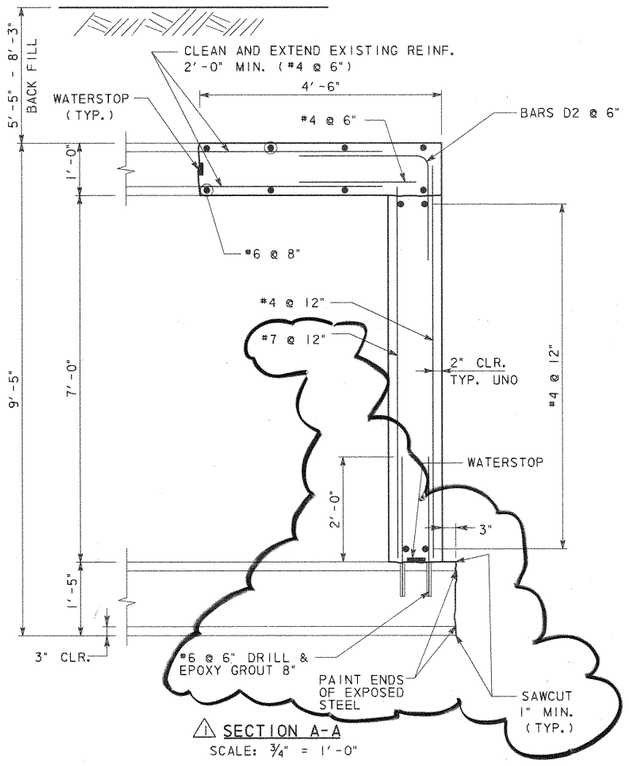

⚠ SECTION A-A
SCALE: ¾" = 1'-0"

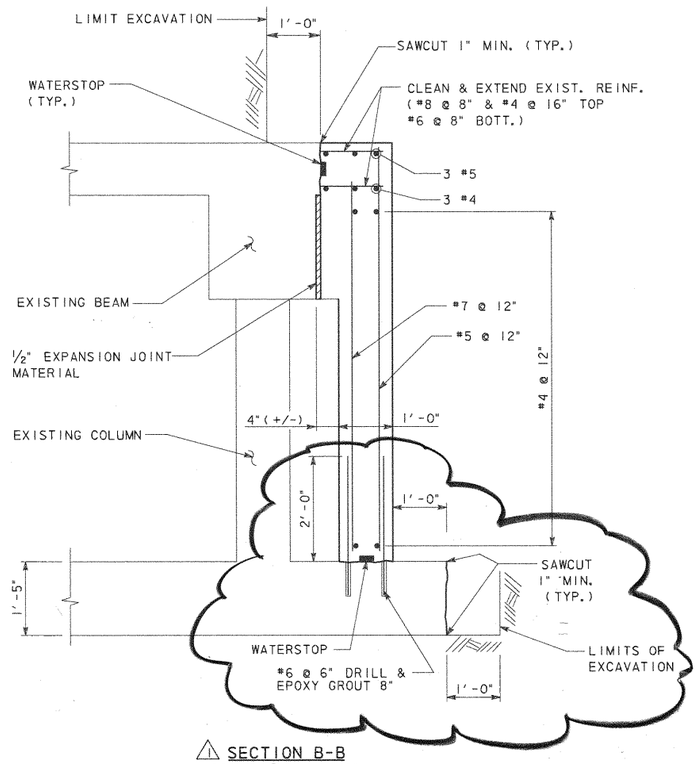

⚠ SECTION B-B
SCALE: ¾" = 1'-0"

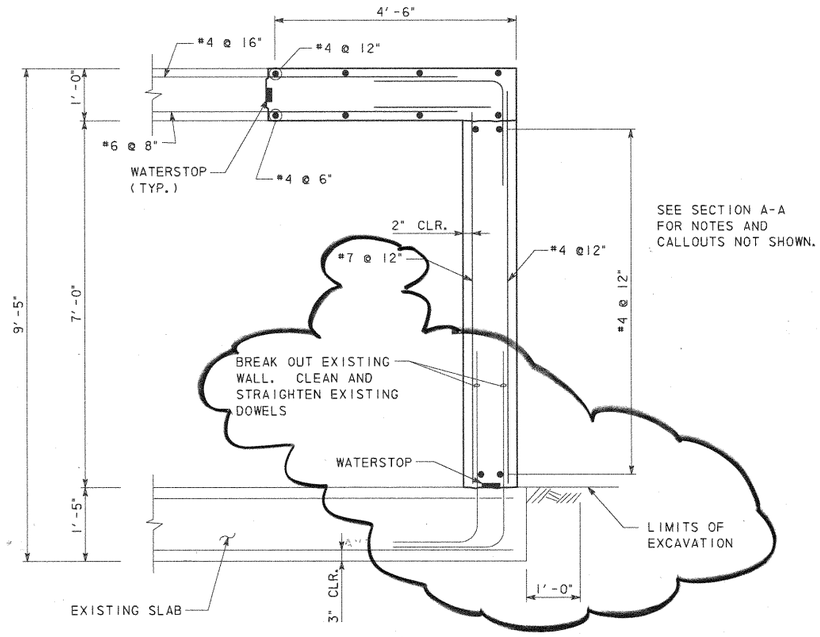

⚠ SECTION D-D
SCALE: ¾" = 1'-0"

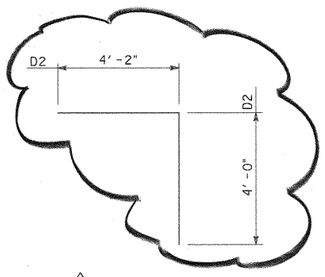

⚠ BARS D (#6)

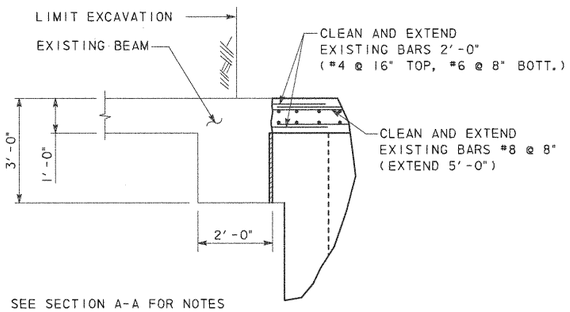

SEE SECTION A-A FOR NOTES AND REINFORCEMENT INFORMATION

SECTION C-C
SCALE: ½" = 1'-0"

DESCRIPTION	CLASS "C" CONC.	EXCAVATION	TEMP. SPL. SHORING	REINF. STEEL	DEMOLITION
	CY	CY	SF	LBS	CY
CUTOUT (NORTH)	22.2	255	789	9610	71.0

STATE OF TEXAS
WALLY R. BURNS
44162
REGISTERED PROFESSIONAL ENGINEER

Wally R Burns
11/13/02

NO.	DATE	REVISION	APPROVED
		CHANGE ORDER 10A	
⚠ 1	JAN 2002	REVISED SLAB CONN.	WRB

Turner Collie & Braden Inc.
Engineers • Planners • Project Managers

TRANSPORTATION | Job No. 81-07401-024

© 1998 Texas Department of Transportation

US 183
LAKECREEK
CUTOUT WALL
STRUCTURAL DETAILS

SHEET 2 OF 2

Designed	WRB	FED. RD. DIV. NO.	STATE	FEDERAL AID PROJECT NO.				HIGHWAY NO.
Checked		6	TEXAS	NH99(556)				US 183
Drawn	JAF	STATE DIST. NO.	COUNTY	CONTROL NO.	SECTION NO.	JOB NO.		SHEET NO.
Checked		14	WILLIAMSON	151	5	072		261 L

0151-05-072 CO 10-A

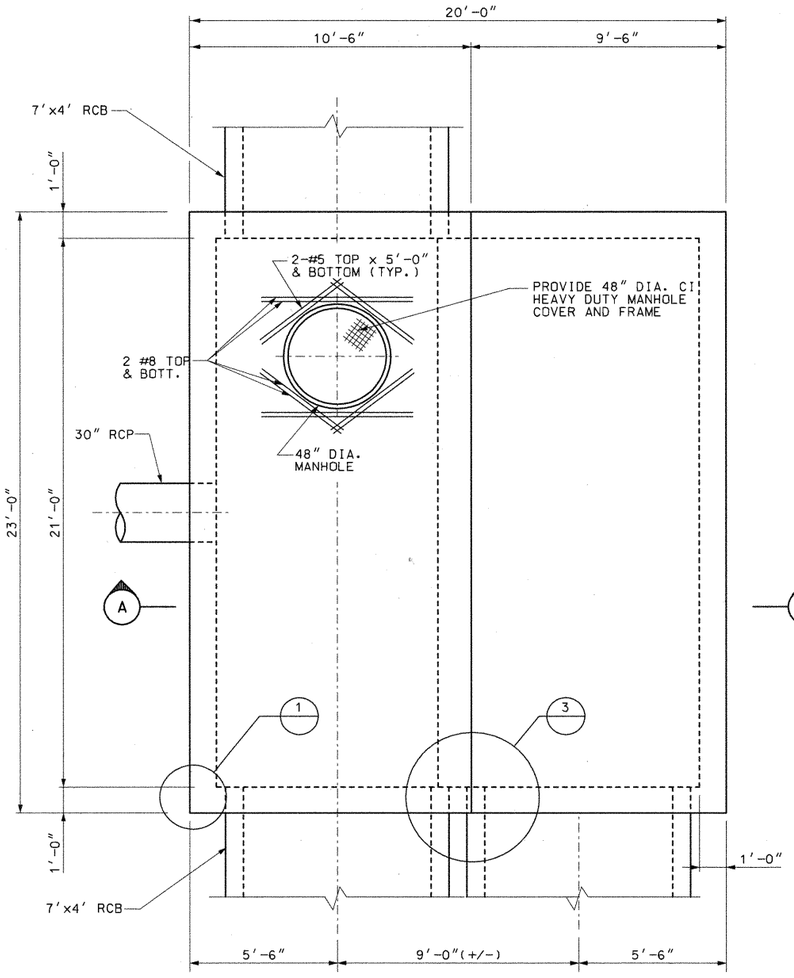

PLAN
$\frac{3}{8}$" = 1'-0"

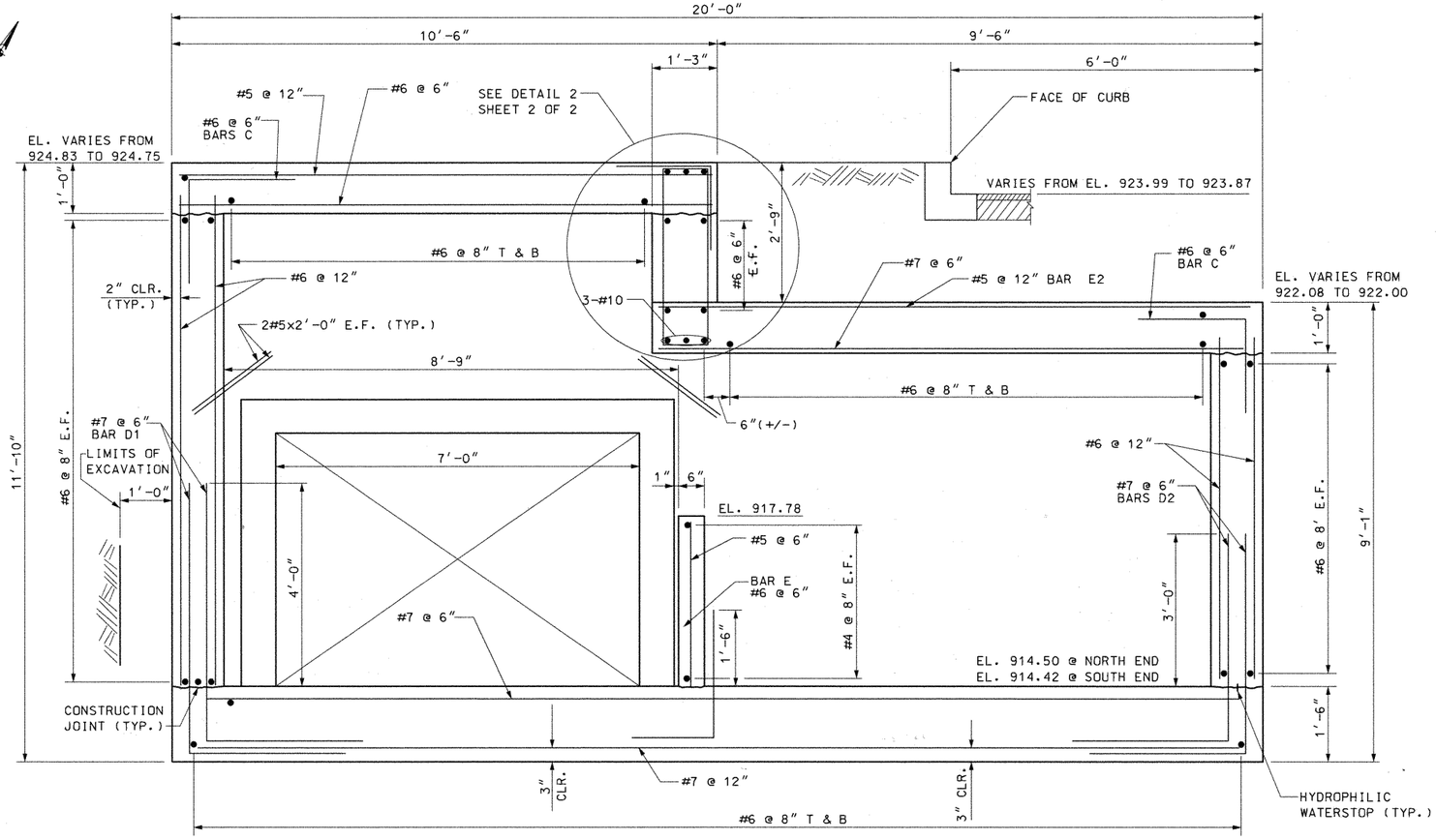

SECTION A-A
$\frac{3}{4}$" = 1'-0"

NOTES:

1. DESIGN IN ACCORDANCE WITH AASHTO 1996 STANDARD SPECIFICATIONS FOR HS-20 LOADING.
2. ALL CONCRETE SHALL BE CLASS "C".
3. SEE HYDRAULIC DETAIL SHEETS FOR FLOW LINES.
4. WATERSTOPS SHALL BE HYDROPHILIC WATERSTOPS.

STATE OF TEXAS
WALLY R. BURNS
44162
REGISTERED PROFESSIONAL ENGINEER
11/21/00

NO.	DATE	REVISION	APPROVED
		Change Order No 10 A	

Turner Collie & Braden Inc.
Engineers • Planners • Project Managers

TRANSPORTATION (Unit) | 83-07401-024 (Job No.) | (Approved)

© 1998 Texas Department of Transportation

US 183
LAKECREEK
WATER QUALITY POND
STRUCTURAL DETAILS

SHEET 1 OF 2

Designed	Proj. No. Div. No.	State	Federal Aid Project No.	Highway No.
WRB	6	TEXAS	NH99(556)	US 183
Checked				
JAF	State Dist. No.	County	Control No. / Section No. / Job No.	Sheet No.
Drawn	14	WILLIAMSON	151 / 5 / 072	261M
Checked				

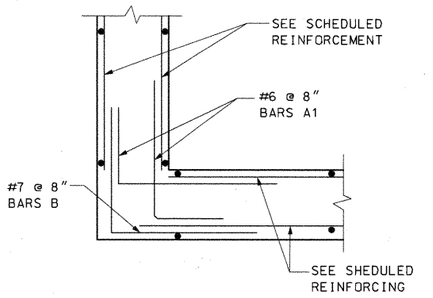

DETAIL 1 (ABOVE EL. 920'-1")
1" = 1'-0"

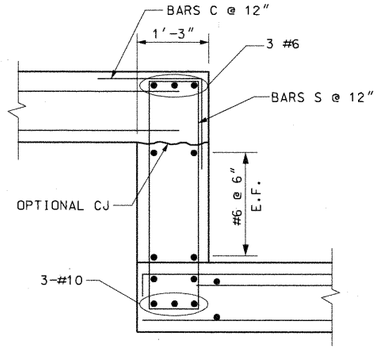

DETAIL 2
1" = 1'-0"

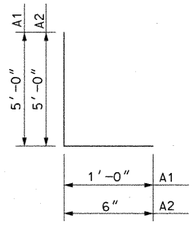

BARS A (#6)

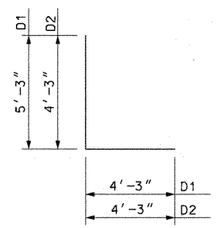

BARS D (#7)

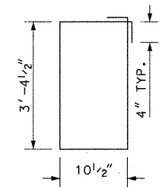

BARS S (#4)

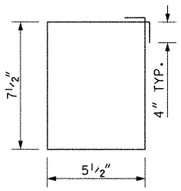

BARS S1 (#3)

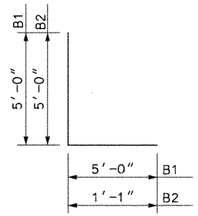

BARS B (#7)

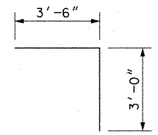

BARS C (#6)

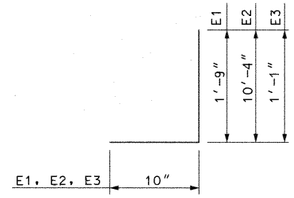

BARS E (#5)

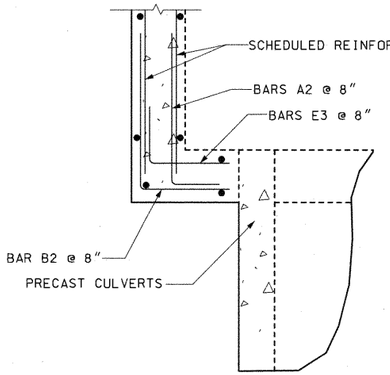

DETAIL 1 (BELOW EL. 920'-1")
1" = 1'-0"

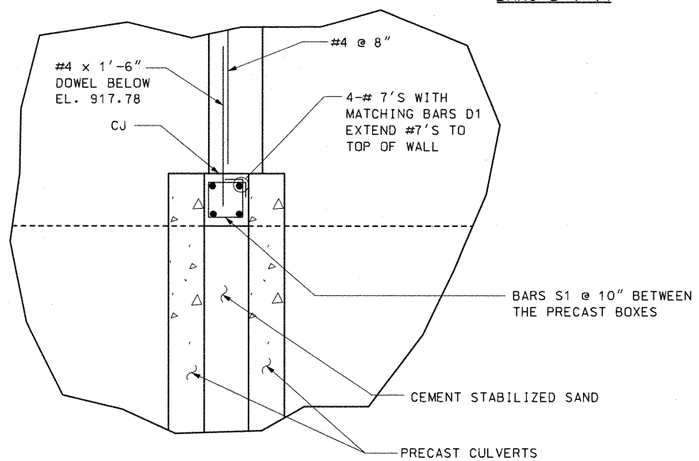

DETAIL 3 (BELOW EL. 920'-1")
1" = 1'-0"

ESTIMATED QUANTITIES *				
DESCRIPTION	CLASS "C" CONC.	EXCAVATION	TEMP SPL SHORING	REINF. STEEL
	CY	CY	SF	LBS
SPLITTER BOX FOR WATER QUALITY POND	72.1	240	1089	23,270

* QUANTITIES FOR CONTRACTOR'S INFORMATION ONLY.
ALL ITEMS ARE SUBSIDIARY TO THE SPLITTER BOX ITEM.

STATE OF TEXAS
WALLY R. BURNS
44162
REGISTERED PROFESSIONAL ENGINEER
11/21/00

NO.	DATE	REVISION	APPROVED
		Change Order No 10A	

Turner Collie & Braden Inc.
Engineers • Planners • Project Managers

UNIT	JOB NO.	Approved
TRANSPORTATION	81-07401-024	

© 1998 Texas Department of Transportation

US 183
LAKECREEK
WATER QUALITY POND
STRUCTURAL DETAILS

SHEET 2 OF 2

Designed	WRB	FED. RD. DIV. NO.	STATE	FEDERAL AID PROJECT NO.				ASSIGNMENT NO.
Checked		6	TEXAS	NH99(555)				US 183
Drawn	JAF	STATE DIST. NO.	COUNTY	CONTROL NO.	SECTION NO.	JOB NO.		SHEET NO.
Checked		14	WILLIAMSON	151	5	072		2&1N

Job 10A
0121-02-055

AF 41904A

Ultimate Drainage Areas North of R.M. 620 Were Used In Storm Sewer And Water Quality Pond Design

R.M. 620

PECAN PARK

LAKE CREEK PARKWAY

HYMEADOW

Q50 = 447.4 cfs
Outfall 1

Pond 1A

Pond 1B

Pond 1C

Outfall 2
Q100 = 412 cfs
Q50 = 385 cfs

Pond 2A

Pond 2B

Pond 2C

Pond 2D1

Pond 2D2

R.M. 620 Median Pond

Q50 = 800 cfs

Q50 = 89.2 cfs

To Drainage Structures (By Others)

MELLOW MEADOWS DRIVE

LAKESTOP BLVD.

Interim Drainage Areas

US 183

R.M. 620

ANDERSON MILL ROAD

CONTRIBUTING AREA TO LAKE CREEK CHANNEL

A_{TOTAL} = 1133 ACRES
Q_{50} = 4100 cfs *
Q_{100} = 4400 cfs *

* THESE FLOWS ARE BASED ON REGIONAL ANALYSIS OF THE ENTIRE CONTRIBUTING AREA AND DO NOT EQUATE TO THE ACCUMULATED THYSYS FLOWS.

Q50 = 200 cfs

NO.	DATE	REVISION	APPROV.
4			
3			
2			
1			

Turner Collie & Braden Inc.
CONSULTING ENGINEERS
TEXAS AUSTIN/DALLAS/HOUSTON/PORT ARTHUR
COLORADO DENVER

Unit: AUSTIN | Job No. 72-07401-022 | Approved

STATE DEPARTMENT OF HIGHWAYS AND PUBLIC TRANSPORTATION

©1998 TxDOT

DRAINAGE AREA MAP

SCALE: 1" = 200'

Designed DAN	FED. NO. DIV. NO.	STATE	FEDERAL AID PROJECT NO.			HIGHWAY NO.
Checked	6	TEXAS	NH 99(556)			U.S. 183
Drawn WWS	STATE DIST. NO.	COUNTY	CONTROL NO.	SECTION NO.	JOB NO.	SHEET NO.
Checked DAN	14	WILLIAMSON	151	05	072	262a

STATE OF TEXAS
Robert W. Barnett
49537
REGISTERED PROFESSIONAL ENGINEER

Robert W. Barnett
5-09-88

A.F. 61904A

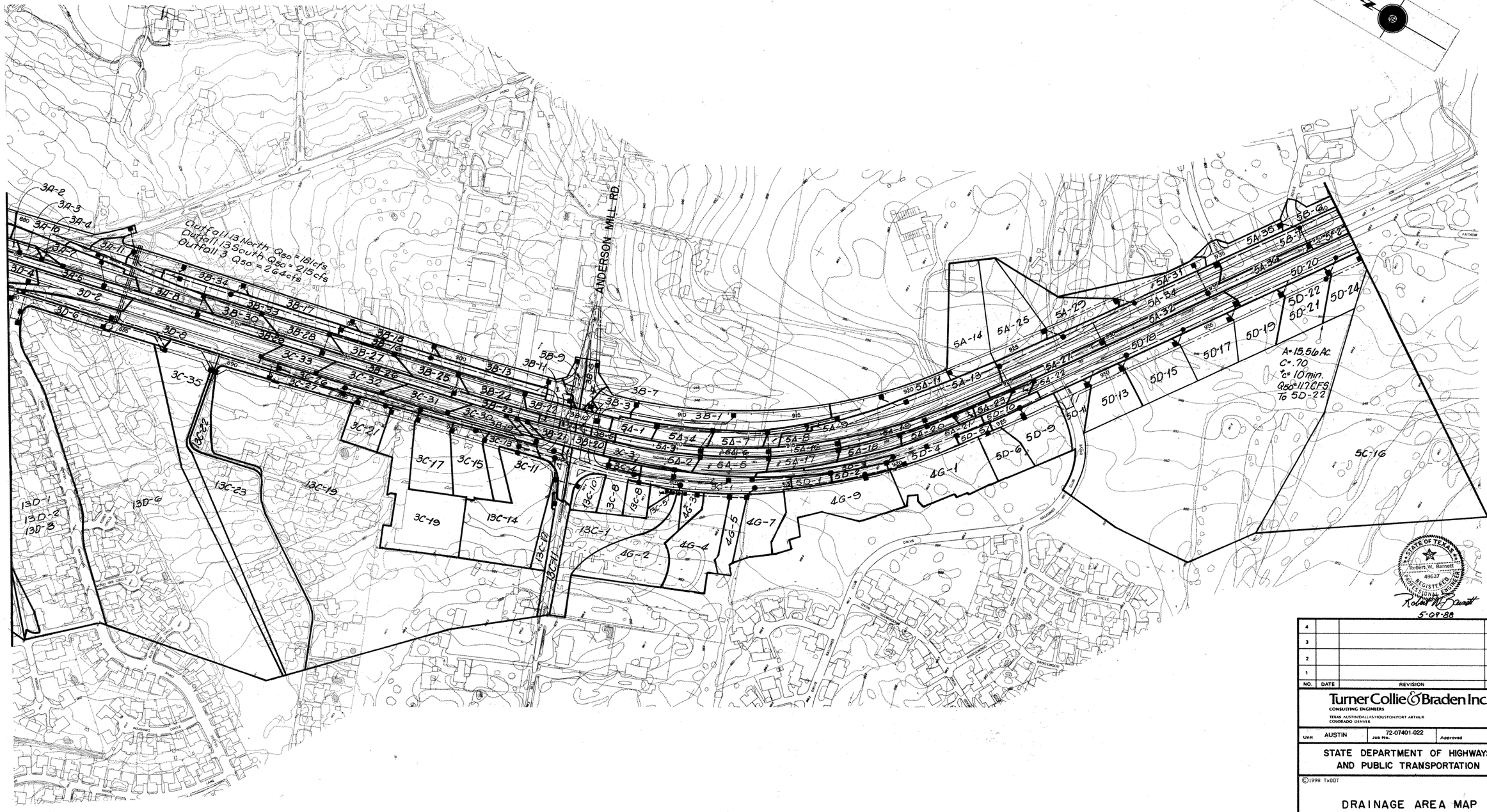

NO.	DATE	REVISION	APPROV.
4			
3			
2			
1			

Turner Collie & Braden Inc.
CONSULTING ENGINEERS
TEXAS AUSTIN/DALLAS/HOUSTON/PORT ARTHUR
COLORADO DENVER

Unit AUSTIN | Job No. 72-07401-022 | Approved

STATE DEPARTMENT OF HIGHWAYS AND PUBLIC TRANSPORTATION

©1998 TxDOT

DRAINAGE AREA MAP

SCALE: 1"=200'

Designed DAN	FED. RD. DIV. NO.	STATE	FEDERAL AID PROJECT NO.			HIGHWAY NO.
Checked	6	TEXAS	NH 99(556)			U.S. 183
Drawn WWS	STATE DIST. NO.	COUNTY	CONTROL NO.	SECTION NO.	JOB NO.	SHEET NO.
Checked DAN	14	WILLIAMSON	151	05	072	202b

A.F. 41804A

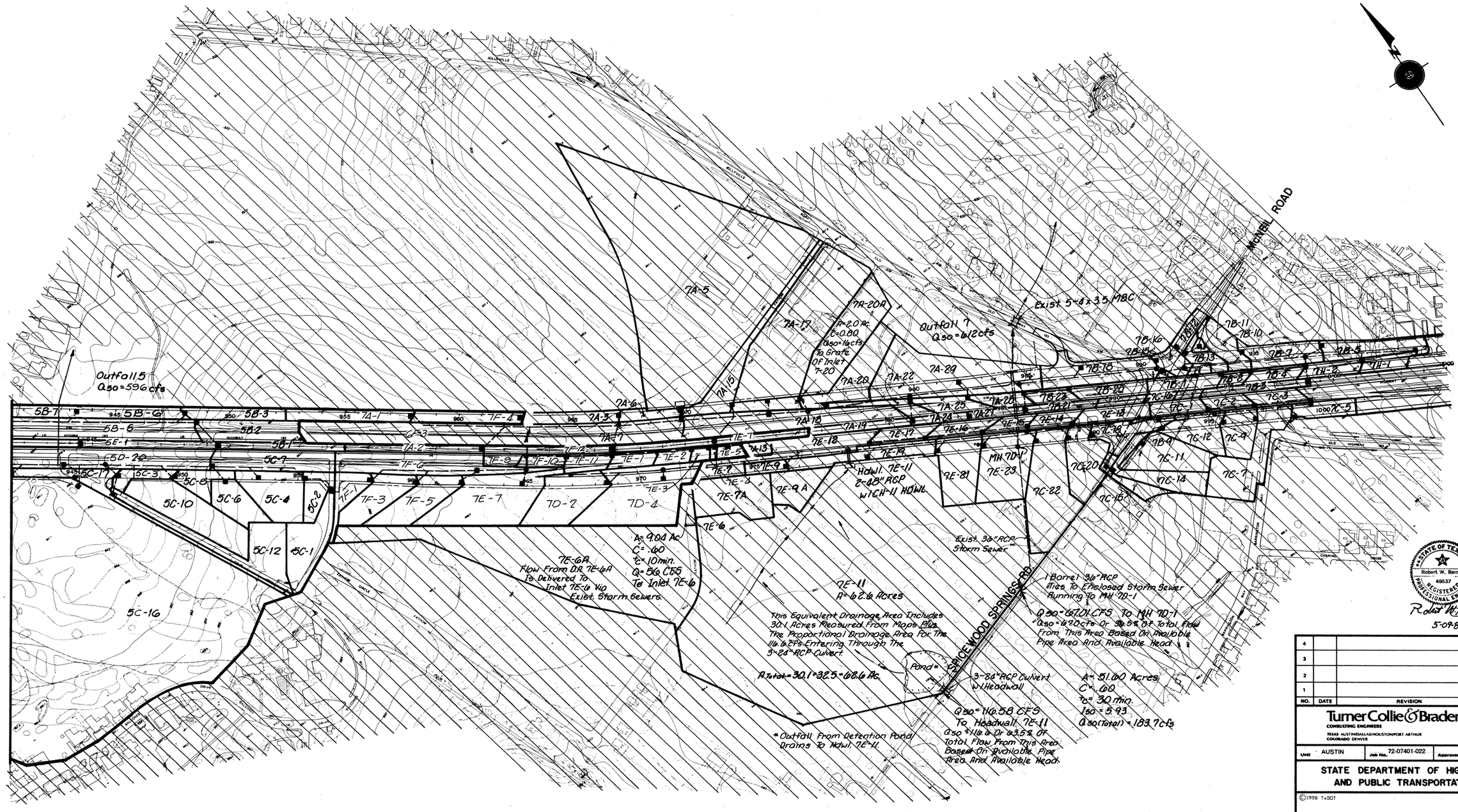
MICHEL ROAD
Outfall 5
Q50=596cfs
Outfall 7
Q50=612cfs
Exist 5-8'x3.5' MBC
7A-5
7A-17
7A-20A
A=2.0 Ac.
C=0.80
Q50=14cfs
To Grate Of Inlet 7-20
7A-15
7A-6
7A-3
7A-7
7A-18
7A-19
7A-20
7A-22
7A-29
7A-25
7A-24
7A-27
7A-26
7A-1
7A-2
7A-13
7F-4
7F-12
7F-11
7F-10
7F-9
7F-8
7F-6
7F-5
7F-3
7F-2
7F-1
7E-1
7E-2
7E-5
7E-7
7E-8
7E-9
7E-9A
7E-9A
7E-6
7E-3
7E-4
7E-7A
7E-10
7E-12
7E-13
7E-14
7E-15
7E-16
7E-17
7E-18
7E-19
7E-11
7E-81
7E-82
7E-23
MH 7D-1
7D-2
7D-4
HDWL 7E-11
2-48" RCP
W/CH-11 HDWL
5B-7
5B-6
5B-5
5B-3
5B-2
5B-1
5E-1
5D-20
5C-17
5C-7
5C-3
5C-8
5C-10
5C-6
5C-4
5C-2
5C-12
5C-1
5C-16
7B-11
7B-10
7B-16
7B-15
7B-13
7B-12
7B-14
7B-18
7B-17
7B-1
7B-2
7B-3
7B-4
7B-5
7B-6
7B-7
7B-8
7B-9
7B-21
7B-22
7B-23
7C-16
7C-1
7C-2
7C-3
1000 7C-5
7C-18
7C-19
7C-20
7C-12
7C-4
7C-11
7C-14
7C-7
7C-82
7C-15
7D-9
7D-11
7D-12
7D-13
7D-14
7D-15
7D-16
7D-17
7D-18
7D-19
7D-20
7D-21
7D-22
7D-23
7D-24
7D-25
7D-26
7D-27
7D-28
7D-29
7D-30
7D-31
7D-32
7D-33
7D-34
7D-35
7D-36
7D-37
7D-38
7D-39
7D-40
7D-41
7D-42
7D-43
7D-44
7D-45
7D-46
7D-47
7D-48
7D-49
7D-50

MATCH LINE - STA. 829+00.00

MATCH LINE - STA. 841+00.00

R.M. 620

830+00 835+00 840+00

RM 620 Median Water Quality Ponds SEE Sht. 248

See Right Storm Sewer P&P Sht. 293 For Profiles

See Sht. 316 For Profile

See Sht. 317 For Profile

Inlet ID-46 Inlet ID-55 Inlet ID-54 Inlet ID-58 Inlet ID-59 Inlet ID-67 Inlet ID-71 Inlet ID-70 Inlet ID-69

Inlet ID-52 Inlet ID-68 Inlet ID-72 Inlet ID-74 Inlet 14-07

Jct. ID-03 Jct. 12-05 Jct. 12-04 Jct. ID-56 Jct. ID-55 Jct. ID-57 Jct. ID-60 Jct. ID-61 Jct. ID-64 Jct. ID-66 Jct. ID-73 Jct. ID-75 Jct. ID-76 Jct. 1C-25 Jct. 1C-24 Jct. 1C-23

Jct. ID-47 Jct. ID-49 Jct. ID-51

Remove Exist. Inlet & 18" RCP & Plug 18" RCP (Incidental)

Remove Existing 6'x4' Box Culv. (Incidental)

Remove Exist. Inlet (Incidental)

Remove Exist. 18" RCP & Plug (Incidental)

See 620 Median Pond Splitter Box Plan & Prof. Sht. 328 for Prof.

Bend 30° Rt.

Bend 5° Rt. Exist. 8'x6' RCB

Bend 45° Lt.

High Point R. 925.57

Exist. Inlet ID-50

Exist. FW-N (Mod.) Wingwall ID-80

Exist. 12'x8' RCB

Exist. Inlet ID-63

Exist. CW 11-A HDWL ID-65

Plug Exist. 36" RCP @ 12'x8' RCB (Incidental)

Exist. MCW-P-15° (Mod.) 1E-2

Exist. MCW-P-15° (Mod.) 1E-1

See Sht. 261 Water Quality Pond 7C

Exist.

Sta. 838+50-60' Lt ℄
Sta. 838+50-128.5' Rt ℄
Inlet D.I. ID-74
Type I
Top = 925.50
Tie Inlet To Exist. 18" RCP
Sta. 838+50-136.5' Rt ℄
Jct. ID-75
Exist. 6'-18" RCP @ 2.25%
Match Exist. R. 919.50±
R. 919.32
R. 913.72

925 920 915 910

Sta. 831+75-84' Rt ℄
Jct. ID-50

Sta. 832+42-84' Rt ℄
Jct. ID-60

Sta. 10+75-31.5' Rt. ℄ RM 620
Sta. 831+77.60-75' Rt. ℄
17'-18" RCP @ 0.42%
Inlet ID-55
Type II
T.C. = 926.15
R. 921.65
R. 921.37
R. 921.56
45'-18" RCP @ .42%

Sta. 10+75-31.5' Lt ℄ RM 620
Sta. 832+40.60-75' Rt ℄
12'-18" RCP @ 0.32%
Inlet ID-58
Type II
T.C. = 925.95
R. 921.45
R. 921.22
R. 921.39
54'-18" RCP @ .32%

Sta. 10+81-67' Lt ℄ RM 620
Sta. 832+55.71-81' Rt ℄
Plug-Temp. Tie To ID-59
R. 921.39
R. 921.70
17'-18" RCP @ 1.85%

Sta. 10+81-52' Rt ℄ RM 620
Sta. 831+57.21-81' Rt ℄
Plug-Temp. Tie To ID-54
R. 921.97
R. 921.56
22'-18" RCP @ 1.86%

Sta. 831+72-145.5' Rt. ℄
Bend 5° Rt.
Sta. 831+75-141.76' Rt. ℄
Jct. ID-57

Sta. 832+43-147.71' Rt. ℄
Jct. ID-61

Sta. 832+95-156' Rt. ℄
Jct. ID-62

Sta. 833+33.60-142.50' Rt. ℄
Bend 30° Rt.

Sta. 835+50-148.50' Rt. ℄
Exist. Jct. ID-64

Sta. 836+00-142.50' Rt. ℄
Exist. Jct. ID-66

Sta. 836+75-136.5' Rt. ℄
Exist. Jct. ID-73

Sta. 838+50-136.5' Rt. ℄
Exist. Jct. ID-75

Sta. 838+80-142.50' Rt. ℄
Bend 45° Lt
Sta. 838+99.35-123.15' Rt. ℄
Jct. ID-76

Sta. 839+74.01-147.5' Rt. ℄
Jct. 1C-25

Sta. 840+64.50-147.5' Rt. ℄
45° Bend

Sta. 840+79.34-124.75' Rt. ℄
Jct. 1C-24
Begin 36" RCP
End Splitter Box

Sta. 840+92-117' Rt. ℄
Jct. 1C-23
End 36" RCP Begin Splitter Box

Sta. 829+75-131.5' Rt. ℄
Jct. ID-49

Sta. 829+60-161.5' Rt. ℄
Jct. ID-47

Sta. 830+11-169.5' Rt. ℄
Jct. ID-51

Sta. 830+59-161.5' Rt. ℄
Jct. ID-53

Sta. 831+50-248.5' Rt. ℄
Exist. Jct. ID-80

Edge Of Shoulder Southbound Main Lane

Identical

Exist. 60'-8'x6' RCB @ .24%

Exist. 111'-8'x6' RCB @ 0.24%

Exist. 15'-8'x6' RCB @ .24%

Exist. 36'-8'x6' RCB @ .24%

Exist. 48'-8'x6' RCB @ .24%

Exist. 68'-8'x6' RCB @ .24%

Exist. 52'-8'x6' RCB @ .24%

Exist. 39'-12'x8' RCB @ .34%

Exist. 171'-12'x8' RCB @ .33%

Exist. 210'-12'x8' RCB @ .34%

50'-12'x8' RCB @ .34%

75'-12'x8' RCB @ .34%

Exist. 175'-12'x8' RCB @ .34%

30'-12'x8' RCB @ .34%

25'-12'x8' RCB @ .34%

127'-36" RCP @ 0.82%

8'-36" RCP @ 0.88%

Top of Curb @ Rt. Frtg. Rd.

Nat Grd. @ R.O.W.

Splitter Box

R. 918.54 R. 918.40 R. 918.36 R. 918.27 R. 918.15 R. 916.16 R. 917.87 R. 917.88 R. 917.72 R. 917.59 R. 915.59 R. 915.46 R. 914.72 R. 914.50 R. 914.31 R. 913.72 R. 913.62 R. 913.54 R. 917.35 R. 918.39 R. 918.50 R. 918.57

829 830 831 832 833 834 835 836 837 838 839 840 841

Notes:
1A. For Inlets ID-46, ID-52, ID-54 & ID-59 See Gutter Details, Interior Bent Sheet. 448 449
1. See Main Lane Storm Sewer Profiles Sht. 317 For Main Lane Drainage.
2. Swales And Inlets In Separation Area Will Typically Be 6' Behind Face Of Curb Unless Dimensioned Otherwise.
3. Contractor To Field Verify Exist. Flow Lines and Locations.
4. All Bends In Box Culverts Are Called Out From Centerline Of Structure. All Box Tie-Ins Are Called Out From Inside Face Of Structure.

NO.	DATE	REVISION	APPROVED
		Change Order #6	

Turner Collie & Braden Inc.
CONSULTING ENGINEERS
TEXAS AUSTIN/DALLAS/HOUSTON/PORT ARTHUR
COLORADO DENVER

AUSTIN | Job No. 72-07401-022 | Approved

STATE DEPARTMENT OF HIGHWAYS AND PUBLIC TRANSPORTATION

© 1986 TxDOT

RIGHT STORM SEWER PLAN & PROFILE STA. 829+00 TO STA. 841+00

SCALE: H:1"=50', V:1"=5'

Designed DAN	FED. RD. DIV. NO. 6	STATE TEXAS	FEDERAL AID PROJECT NO. NH 99(556)	HIGHWAY NO. U.S. 183
Checked EPP				
Drawn WWS	STATE DIST. NO. 14	COUNTY WILLIAMSON	CONTROL NO. 151	SECTION NO. 05
Checked DAN			JOB NO. 072	SHEET NO. 294

STATE OF TEXAS — Robert W. Barnett — 49537 — REGISTERED PROFESSIONAL ENGINEER

Robert W. Barnett 5-09-88

MATCH LINE - STA. 829+00.00

MATCH LINE - STA. 841+00.00

R.M. 620

830+00 835+00 840+00

See Right Storm Sewer P&P Sht. 293 For Profiles

RM 620 Median Water Quality Ponds SEE Sht. 248

See Sht. 316 For Profile

See Sht. 317 For Profile

See Sht. 291 Water Quality Pond 1C

Inlet 14-67

Inlet ID-46 Inlet ID-52 Inlet ID-53 Inlet ID-54 Inlet ID-58 Inlet ID-59 Inlet ID-69 Inlet ID-71 Inlet ID-70 Inlet ID-74

Jct. ID-05 Remove Exist. 18" RCP Plug (Incidental) Jct. ID-56 Jct. 12-04 Jct. 12-05 Jct. ID-57 Jct. ID-60 Remove Exist. 6'x4' Box Culv. (Incidental) Bend 30° Rt. Inlet (Incidental) Jct. ID-64 Exist. ℄ High Point El. 926.57 Jct. ID-66 Jct. ID-67 Jct. ID-68 Jct. ID-75 Bend 45° Lt. Jct. ID-76 Jct. IC-25 45° Bend Jct. IC-24 Jct. IC-23

Jct. ID-67 Jct. ID-69 Jct. ID-51 Exist. Bend 5° Rt. Exist. 8'x6' RCB Plug Exist. 36" RCP @ 12'x8' RCB (Incidental) Exist. 12'x8' RCB

Exist. Inlet ID-50 Exist. FW-N (Mod) Wingwall ID-80 Exist. Inlet ID-63 Exist. CH II-A HDWL ID-65 Sta. 831+75 - 84' Rt.℄ Jct. ID-50

Exist. MCW-P-15° (Mod.) IE-2

Exist. MCW-P-15° (Mod.) IE-1

Sta. 838+42-84' Rt.℄ Jct. ID-60

Sta. 838+50-60' Lt.℄ Sta. 838+50-128.5' Rt.℄ Inlet D.I. ID-74 Type I Top = 925.50 Tie Inlet To Exist. 18" RCP Sta. 838+50-136.5' Rt.℄ Jct. ID-75

Match Exist. ℄ 919.50' Exist. 6'-18" RCP @ 2.25% ℄ 919.32 ℄ 913.72

Sta. 10+75-31.5' Rt.℄ R.M. 620 Sta. 831+77.60-75' Rt.℄ Inlet ID-55 Type II T.C. = 926.15 11'-18" RCP @ 0.42% ℄ 921.65 ℄ 921.37 ℄ 921.56 45'-18" RCP @ .42%

Sta. 10+75-31.5' Rt.℄ R.M. 620 Sta. 832+40.60-75' Rt.℄ Inlet ID-58 Type II T.C. = 925.95 12'-18" RCP @ 0.32% ℄ 921.45 ℄ 921.22 ℄ 921.39 54'-18" RCP @ .32%

Sta. 10+81-47' Lt.℄ R.M. 620 Sta. 832+55.71-81' Rt.℄ Plug-Temp. Tie To ID-59 Identical ℄ 921.39 ℄ 921.70 11'-18" RCP @ 1.85%

Edge Of Shoulder Southbound Main Lane

Identical Sta. 10+81-52' Rt.℄ R.M. 620 Sta. 831+57.21-81' Rt.℄ Plug-Temp. Tie To ID-54 ℄ 921.97 ℄ 921.56 22-18" RCP @ 1.86%

Sta. 831+72-145.5' Rt.℄ Bend 5° Rt. Sta. 831+75-161.76' Rt.℄ Jct. ID-57

Sta. 830+11-169.5' Rt.℄ Jct. ID-51

Sta. 832+43-147.71' Rt.℄ Jct. ID-61

Sta. 832+95-151.0' Rt.℄ Jct. ID-62

Sta. 833+33.60-142.50' Rt.℄ Bend 30° Rt.

Sta. 835+50-148.50' Rt.℄ Exist. Jct. ID-64

Sta. 836+00-142.50' Rt.℄ Exist. Jct. ID-66

Sta. 836+75-136.5' Rt.℄ Exist. Jct. ID-73

Sta. 838+50-136.5' Rt.℄ Exist. Jct. ID-75

Sta. 838+80-142.50' Rt.℄ Bend 45° Lt. Sta. 838+99.35-123.15' Rt.℄ Jct. ID-76

Sta. 839+78.01-147.5' Rt.℄ Jct. IC-25

Sta. 840+70.34-124.75' Rt.℄ Jct. IC-24 Begin 36" RCP End Splitter Box

Sta. 840+92-117' Rt.℄ Jct. IC-23 End 36" RCP Begin Splitter Box

Sta. 830+59-161.5' Rt.℄ Jct. ID-53

Sta. 831+50-248.5' Rt.℄ Exist. Jct. ID-80

Sta. 840+56.55-147.5' Rt.℄ 45° Bend

Top of Curb @ Rt. Frtg. Rd.

Wat. Gnd. @ R.O.W.

Exist. 60'-6'x6' RCB @ .24% ℄ 918.40 ℄ 918.16

Exist. 111'-8'x6' RCB @ 0.21% ℄ 918.15 ℄ 917.87

Exist. 48'-8'x6' RCB @ .24% ℄ 918.27

Exist. 69'-8'x6' RCB @ .24% ℄ 917.88 ℄ 917.59

Exist. 52'-8'x6' RCB @ .24% ℄ 917.72 ℄ 917.59

Exist. 39'-12'x8' RCB @ 0.34% ℄ 915.46

Exist. 216'-12'x8' RCB @ .34% ℄ 914.72

50'-12'x8' RCB @ .34% ℄ 914.50

75'-12'x8' RCB @ .34% ℄ 914.31

Exist. 175'-12'x8' RCB @ .34% ℄ 913.72

30'-12'x8' RCB @ 0.38% ℄ 913.62 ℄ 913.54

127'-36" RCP @ 0.82% ℄ 918.39 ℄ 918.50

Splitter Box 8'-36" RCP @ 0.88% ℄ 918.57 ℄ 917.35

25'-12'x8' RCB @ 0.34%

Notes:

1A. For Inlets ID-46, ID-52, ID-54 & ID-59 See Culvert Details, Interior Bent Sheet 448-449

1. See Main Lane Storm Sewer Profiles Sht. 317 For Main Lane Drainage.
2. Swales And Inlets In Separation Area Will Typically Be 6' Behind Face Of Curb Unless Dimensioned Otherwise.
3. Contractor To Field Verify Exist. Flow Lines and Locations.
4. All Bends In Box Culverts Are Called Out From Centerline Of Structure. All Box Tie-Ins Are Called Out From Inside Face Of Structure.

NO.	DATE	REVISION	APPROVED
1		C.O. 25	

Turner Collie & Braden Inc.
CONSULTING ENGINEERS
TEXAS AUSTIN DALLAS HOUSTON PORT ARTHUR
COLORADO DENVER

Unit: AUSTIN | Job No. 72-07401-022 | Approved

STATE DEPARTMENT OF HIGHWAYS AND PUBLIC TRANSPORTATION

© 1988 TxDOT

RIGHT STORM SEWER
PLAN & PROFILE
STA. 829+00 TO STA. 841+00

SCALE: H:1" = 50', V:1" = 5'

Designed DAN	FED. RD. DIV. NO. 6	STATE TEXAS	FEDERAL AID PROJECT NO. NHF99(556)				HIGHWAY NO. U.S. 183
Checked EPP							
Drawn WWS	STATE DIST. NO. 14	COUNTY WILLIAMSON	CONTROL NO. 151	SECTION NO. 05	JOB NO. 072	SHEET NO. 294	
Checked DAN							

Robert W. Barnett 49537 REGISTERED PROFESSIONAL ENGINEER STATE OF TEXAS
5-09-88

MATCH LINE - STA. 828+00.00

MATCH LINE - STA. 841+00.00

R.M. 620

R.M. 620

INLET 1D-55

INLET 1D-58

JCT. ID-57

JCT. ID-61

See Right Storm Sewer P&P Sht. 29S For Profile

See Sht. 9/6 For Profile

See Sht. 9/7 For Profile

Inlet 1A-67

Inlet 1D-66 Inlet 1D-54 Inlet 1D-69 Inlet 1D-67 Inlet 1D-71 Inlet 1D-70 Inlet 1D-69

Jct. 1B-05 Jct. 1B-04 Inlet 1D-56 Jct. 1D-55 Jct. 1D-58

Remove Exist. Inlet & 18" RCP & Plug 18" RCP (Incidental)

Remove Exist. 18" RCP & Plug (Incidental)

Remove Exist. Inlet (Incidental)

Remove Existing 6'x4' Box Culv. (Incidental)

Plug Exist. 36" RCP @ 18"x8" RCB (Incidental)

See 620 Median Pond Splitter Box Plan & Prof. Sht. 22B for Prof.

Jct. 1D-67 Jct. 1D-69 Jct. 1D-51 Exist. Bend 6° Rt. Exist. 18'x8' RCB Jct. 1D-60 Bend 30° Rt. Jct. 1D-64 Exist. Jct. 1D-66 Jct. 1B-03 Jct. 1D-75 Bend 48° Lt. Jct. 1D-76

Exist. Inlet 1D-50

Exist. Flr-N (Mod.) Wingwall 1D-80

Exist. 12'x8' RCB

Exist. Inlet 1D-63

Exist. C.M.P.-A HDWL 1D-66

Exist. MCW-P-18° (Mod.) 1E-1

Exist. MCW-P-19° (Mod.) 1E-2

Exist.

High Point El. 905.57

Water Quality Pond 1C

See Sht. 2H

Jct. 1C-25 45° Bend Jct. 1C-24

Jct. 1C-23

Sta. 831+68~86' Rt.℄ Jct. 1D-59

Sta. 832+45~89' Rt.℄ Jct. 1D-60

STA 10+75~36' RT CL RM 620
STA 831+73.10~75' RT CL
INLET 1D-55
TYPE II
TC=926.10

STA 10+75~36' RT CL RM 620
STA 832+45.10~75' RT CL
INLET 1D-58
TYPE II
TC=925.87

9'~8" RCP @ 1.0%

9'~18" RCP @ 0.67%

℄ 921.65 ℄ 921.56 54'~18" RCP @ .35%

℄ 921.87 FL=921.45

℄ 921.39 59'~18" RCP @ .29%

FL=921.22

Identical

Sta. 10+81-67' Lt ℄ RM 620 Sta. 832+33.71-81' Rt.℄ Plug-Temp. Tie To 1D-59

Sta. 831+70.50~141.76 RT CL JCT 1D-57 STA 831+72~145.50' RT CL BEND 5° RT.

STA 832+47.50~147.71' RT CL JCT 1D-61

Sta. 831+32.21-81' Rt.℄ Plug-Temp. Tie To 1D-64

Sta. 835+50~146.50' Rt.℄ Exist. Jct. 1D-66

Sta. 836+00~142.50' Rt.℄ Exist. Jct. 1D-66

Sta. 836+75~136.5' Rt.℄ Exist. Jct. 1D-73

Sta. 838+50~136.5' Rt.℄ Exist. Jct. 1D-75

Sta. 838+00~142.50' Rt.℄ Bend 45° Lt Sta. 836+99.35~129.15' Rt.℄ Jct 1D-76

Sta. 839+78.01~147.5' Rt.℄ Jct. 1C-25

Sta. 840+64.50~147.5' Rt.℄ 45° Bend

Sta. 840+70.34~124.75' Rt.℄ Jct. 1C-26 Begin 36" RCP End Splitter Box

Sta. 840+92~117' Rt.℄ Jct. 1C-23 End 36" RCP Bend Splitter Box

Sta. 829+76~141.5' Rt.℄ Jct. 1D-49

Sta. 829+40~141.5' Rt.℄ Jct. 1D-47

Sta. 830+11~142' Rt.℄ Jct. 1D-51

Sta. 830+89~141.5' Rt.℄ Jct. 1D-53

Sta. 831+50~140.5' Rt.℄ Exist. Jct. 1D-60

Sta. 832+95~136' Rt.℄ Jct. 1D-62

Sta. 833+32.60~142.50' Rt.℄ Bend 30° Rt.

Top of Curb @ Rt. Frtg. Rd.

Nat Grd. @ R.O.W.

Splitter Box 8'~36" RCP @ 0.88%

Exist. 60"~8'x6' RCB @ .26% ℄ 918.54 ℄ 918.40 Exist. 15'~8'x6' RCB @ .26% ℄ 918.36 Exist. 36"~8'x6' RCB @ .26%

Exist. 111'~8'x6' RCB @ 0.24% ℄ 918.15 ℄ 918.27

Exist. 60'~8'x6' RCB @ .24% ℄ 918.09 ℄ 917.87 Exist. 171'~12'x8' RCB @ .33% ℄ 918.19

Exist. 52'~8'x6' RCB @ .34% ℄ 917.78 ℄ 917.59

Exist. 39'~12'x8' RCB @ .34% ℄ 915.46

Exist. 216'~12'x8' RCB @ .34% ℄ 914.72

50'~12'x8' RCB @ .34% ℄ 914.96

75'~12'x8' RCB @ .34% ℄ 914.91

Exist. 179'~12'x8' RCB @ .34% ℄ 918.72

30'~12'x8' RCB @ .34% ℄ 918.62

℄ 917.35 127'~36" RCP @ 0.82% ℄ 918.39 ℄ 918.50

℄ 918.57 ℄ 918.58 25'~12'x8' RCB @ .34%

Sta. 836+99.35~129.15' Rt.℄ Jct 1D-76

Sta. 839+78.01~147.5' Rt.℄ Jct. 1C-25

Sta. 840+64.50~147.5' Rt.℄ 45° Bend

Sta. 836+50-60' Lt ℄
Sta. 836+50-128.5' Rt ℄
Inlet D.I. 1D-74
Type I
Top = 926.50
Tie Inlet To Exist. 18" RCP
Sta. 838+50-136.5' Rt ℄
Jct. 1D-75

Match Exist. ℄ 919.50

Exist. G'~18" RCP @ 2.25%

℄ 919.32

℄ 913.72

Notes:
1A. For Inlets 1D-46, 1D-52, 1D-54 & 1D-59 See Curb Gutter Details, Interior Bent Sheet 4 of 449.
1. See Main Lane Storm Sewer Profiles Sht. 9/7 For Main Lane Drainage.
2. Swales And Inlets In Separation Area Will Typically Be 6' Behind Face Of Curb Unless Dimensioned Otherwise.
3. Contractor To Field Verify Exist. Flow Lines and Locations.
4. All Bends In Box Culverts Are Called Out From Centerline Of Structure. All Box Tie-Ins Are Called Out From Inside Face Of Structure.

Edge Of Shoulder Southbound Main Lane

CHANGE ORDER NO. 10

		CHANGE ORDER NO. 10	
NO.	DATE	REVISION	APPROVED

Turner Collie & Braden Inc.
CONSULTING ENGINEERS
8000 AUSTIN/HOUSTON EXPRESS
CONROE, TEXAS
AUSTIN 78749 512

STATE DEPARTMENT OF HIGHWAYS AND PUBLIC TRANSPORTATION

RIGHT STORM SEWER PLAN & PROFILE
STA. 829+00 TO STA. 841+00

SCALE: H:1"=50' V:1"=5'

Design DAN	DIST. NO.	STATE	FEDERAL AID PROJECT NO.			HIGHWAY NO.
Check EPP	5	TEXAS	RDT 82(288)			U.S. 183
Date WWS	STATE DIST. NO.	COUNTY	CONTROL NO.	SECTION NO.	JOB NO.	SHEET NO.
Drawn DAN	14	WILLIAMSON	151	05	072	294A

STATE OF TEXAS MARK E. JONES 81987 REGISTERED PROFESSIONAL ENGINEER
Mark E. Jones 10-03-00
⚠ ONLY

STATE OF TEXAS ROBERT W. BARNETT 68937 REGISTERED PROFESSIONAL ENGINEER
Robert W. Barnett 5-03-00

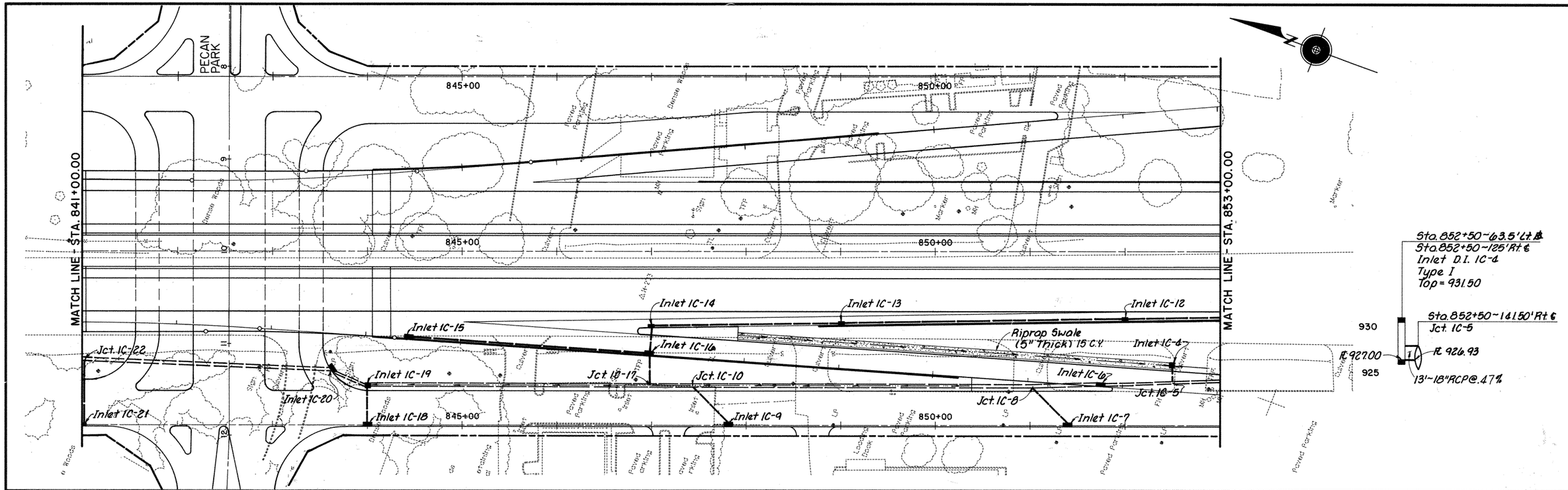

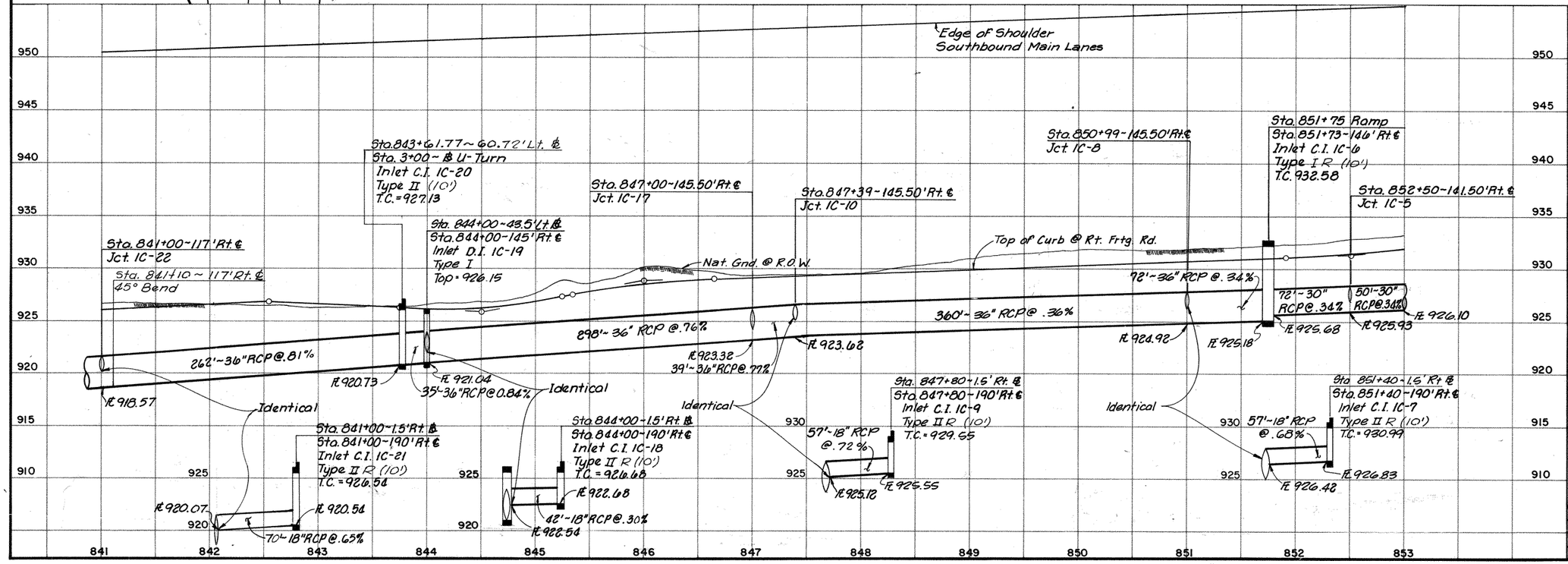

Notes:
1. See Main Lane Storm Sewer Profiles Sht. 317 For Main Lane Drainage.
2. Swales And Inlets In Separation Area Will Typically Be 6' Behind Face Of Curb Unless Dimensioned Otherwise.

STATE OF TEXAS
Robert W. Barnett
49537
REGISTERED PROFESSIONAL ENGINEER
Robert W. Barnett
5-09-88

NO.	DATE	REVISION	APPROVED

Turner Collie & Braden Inc.
CONSULTING ENGINEERS
TEXAS AUSTIN/DALLAS/HOUSTON/PORT ARTHUR
COLORADO DENVER

Unit	Job No.	Approved
AUSTIN	72-07401-022	

STATE DEPARTMENT OF HIGHWAYS AND PUBLIC TRANSPORTATION

© 1988 TxDOT

RIGHT STORM SEWER PLAN & PROFILE STA. 841+00 TO STA. 853+00

SCALE: H:1"= 50', V:1"= 5'

Designed	DAN	FED. RD. DIV. NO.	STATE	FEDERAL AID PROJECT NO.				HIGHWAY NO.
Checked	EPP	6	TEXAS	NH 99(556)				U.S. 183
Drawn	FA	STATE DIST. NO.	COUNTY	CONTROL NO.	SECTION NO.	JOB NO.		SHEET NO.
Checked	WWS	14	WILLIAMSON	151	05	072		295

MATCH LINE - STA. 841+00.00

MATCH LINE - STA. 853+00.00

PECAN PARK

845+00 850+00

Inlet IC-12 Inlet IC-13 Inlet IC-14 Inlet IC-15 Inlet IC-16 Inlet IC-17 Inlet IC-18 Inlet IC-19 Inlet IC-20 Inlet IC-21 Inlet IC-22

Riprap Swale (15" Thick) 16 C.Y.

Jct. IC-5 Jct. IC-6 Jct. IC-7 Jct. IC-8 Jct. IC-10

Inlet IC-4 Inlet IC-7 Inlet IC-9

Sta. 852+50-63.5' Lt. ℄
Sta. 852+50-125' Rt. ℄
Inlet D.I. IC-4
Type I
Top = 931.50

Sta. 852+50-141.50' Rt. ℄
Jct. IC-5
R. 926.93

13'-18" RCP @ .47%

Edge of Shoulder Southbound Main Lanes

Sta. 843+61.77-60.72' Lt. ℄
Sta. 3+00-℄ U-Turn
Inlet C.I. IC-20
Type II (10')
T.C. = 927.13

Sta. 847+00-145.50' Rt. ℄
Jct. IC-17

Sta. 847+39-145.50' Rt. ℄
Jct. IC-10

Sta. 850+99-145.50' Rt. ℄
Jct IC-8

Sta. 851+75 Ramp
Sta. 851+73-146' Rt. ℄
Inlet C.I. IC-6
Type I R (10')
T.C. 932.58

Sta. 852+50-141.50' Rt. ℄
Jct. IC-5

Sta. 841+00-117' Rt. ℄
Jct. IC-22

Sta. 841+10-117' Rt. ℄
45° Bend

Sta. 844+00-43.5' Lt. ℄
Sta. 844+00-145' Rt. ℄
Inlet D.I. IC-19
Type I
Top = 926.15

Nat. Gnd. @ R.O.W.

Top of Curb @ Rt. Frtg. Rd.

262'-36" RCP @ .81%

898'-36" RCP @ .76%

360'-36" RCP @ .36%

72'-36" RCP @ .34%

72'-30" RCP @ .34%

50'-30" RCP @ .34%

Ft 918.57 Ft 920.73 Ft 921.04 Ft 923.32 Ft 923.62 Ft 924.92 Ft 925.18 Ft 925.68 Ft 925.93 Ft 926.10

35'-36" RCP @ 0.84%

39'-36" RCP @ .77%

Identical

Sta. 841+00-1.5' Rt. ℄
Sta. 841+00-190' Rt. ℄
Inlet C.I. IC-21
Type II R (10')
T.C. = 926.54

Ft 920.07 Ft 920.54

70'-18" RCP @ .65%

Sta. 844+00-1.5' Rt. ℄
Sta. 844+00-190' Rt. ℄
Inlet C.I. IC-18
Type II R (10')
T.C. = 926.68

Ft 922.68 Ft 922.54

42'-18" RCP @ .30%

Sta. 847+80-1.5' Rt. ℄
Sta. 847+80-190' Rt. ℄
Inlet C.I. IC-9
Type II R (10')
T.C. = 929.65

57'-18" RCP @ .72%

Ft 925.12 Ft 925.55

Sta. 851+40-1.5' Rt. ℄
Sta. 851+40-190' Rt. ℄
Inlet C.I. IC-7
Type II R (10')
T.C. = 930.99

57'-18" RCP @ .68%

Ft 926.42 Ft 926.83

930 925 920 915 910 950 945 940 935

841 842 843 844 845 846 847 848 849 850 851 852 853

Notes:
1. See Main Lane Storm Sewer Profiles Sht. 317 For Main Lane Drainage.
2. Swales And Inlets In Seperation Area. Will Typically Be 6' Behind Face Of Curb Unless Dimensioned Otherwise.

STATE OF TEXAS
Robert W. Barnett
40537
REGISTERED PROFESSIONAL ENGINEER
Robert W. Barnett
5-09-88

NO.	DATE	REVISION	APPROVED
1		C.O. 25	

Turner Collie & Braden Inc.
CONSULTING ENGINEERS
TEXAS AUSTIN/DALLAS/HOUSTON/PORT ARTHUR
COLORADO DENVER

AUSTIN | 72-07401-022 | Approved

STATE DEPARTMENT OF HIGHWAYS AND PUBLIC TRANSPORTATION

© 1986 TxDOT

RIGHT STORM SEWER
PLAN & PROFILE
STA. 841+00 TO STA. 853+00

SCALE: H:1" = 50', V:1" = 5'

Designed DAN	FED. RD. DIV. NO. 6	STATE TEXAS	FEDERAL AID PROJECT NO. NH-35(556)		HIGHWAY NO. U.S. 183
Checked-E.P.P.					
Drawn FA	STATE DIST. NO. 14	COUNTY WILLIAMSON	CONTROL NO. 151	SECTION NO. 05	JOB NO. 072
Checked WWS					SHEET NO. 295

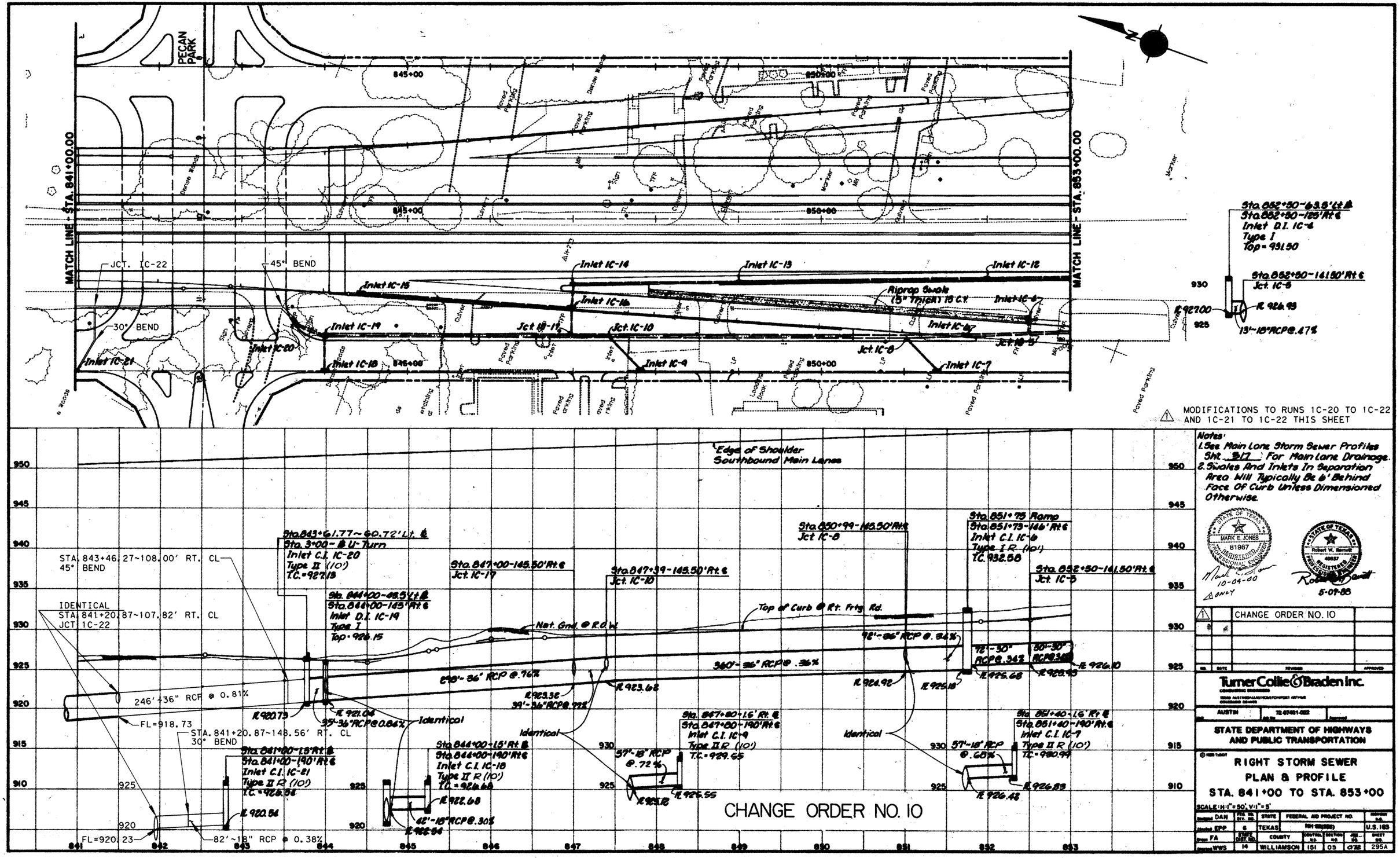

Notes:
1. See Main Lane Storm Sewer Profiles Sht. 317 For Main Lane Drainage.
2. Swales And Inlets In Separation Area Will Typically Be 6' Behind Face Of Curb Unless Dimensioned Otherwise.

STATE OF TEXAS
MARK E. JONES
81987
REGISTERED PROFESSIONAL ENGINEER
10-04-00
ONLY

STATE OF TEXAS
Robert W. Barnett
49837
REGISTERED PROFESSIONAL ENGINEER
5-07-88

NO.	DATE	REVISION	APPROVED
1		CHANGE ORDER NO. 10	

Turner Collie & Braden Inc.
CONSULTING ENGINEERS
TEXAS AUSTIN/DALLAS/HOUSTON/FORT ARTHUR
COLORADO DENVER

AUSTIN | 72-07401-022

STATE DEPARTMENT OF HIGHWAYS AND PUBLIC TRANSPORTATION

© 1985 TUBOT

RIGHT STORM SEWER
PLAN & PROFILE
STA. 841+00 TO STA. 853+00

SCALE: H:1" = 50', V:1" = 5'

Designed DAN	FED. RD. DIV. NO.	STATE	FEDERAL AID PROJECT NO.		HIGHWAY NO.
Checked EPP	6	TEXAS	NH-[illegible]		U.S. 183
Drawn FA	STATE DIST. NO.	COUNTY	CONTROL NO.	SECTION NO.	JOB NO.	SHEET NO.
Checked WWS	14	WILLIAMSON	151	05	072	295A

	ITEM 100	ITEM 110	ITEM 110	ITEM 132	ITEM 132	ITEM 160	ITEM 160	ITEM 164	ITEM 164	ITEM 164	ITEM 168	ITEM 169	ITEM 169	ITEM 247	ITEM 310	ITEM 400	ITEM 400	ITEM 402	ITEM 421	ITEM 423	ITEM 432	ITEM 450	ITEM 450	ITEM 460	ITEM 462	ITEM 462	ITEM 462
	Prep. R.O.W.	EXCAV (CHANNEL)	EXCAV (POND)	EMBANK (TY B)	EMBANK (DC) (TY C) MOD	Furn & Plac Tpsl (Cl 2) (4in)	Furn & Plac Tpsl (Cl 2) (6in)	Cell Fib Mulch Seed	Drill Seed (Temp) (Warm)	Drill Seed (Perm) (Urban) (Clay)	Vegetative Watering	SOIL RET BLNKT (CL1) (TY A)	SOIL RET BLNKT (CL2)(TY G)	Fl Bs (TyD Gr6 Cl 2) (Comp In Plac)	Apsh Mat (MC-30)	Struct Excav (Sewer)	Struct Excav (Culv Large)	TRENCH EXCAV PROTECT	CL C Conc. (misc.)	Pond Wall (Cast-In-Place)	RIPRAP (CONC.) (CL B)	Rail (TY PR)	Rail (TY C4) (S)	CMP (Gal Stl 12in)	Conc Box Culv (2'x4')	Conc Box Culv (4'x4')	Conc Box Culv (6'x4')
	AC	CY	CY	CY	CY	SY	SY	SY	SY	SY	MG	SY	SY	TONS	GAL	CY	CY	LF	CY	SF	CY	LF	LF	LF	LF	LF	LF
620 Median Pond	–	–	7313	–	892	–	2144	–	1072	2144	54	–	–	–	–	4130	–	2165	81.3	9811	5.1	–	1055	35	–	–	468
LakeCreek Pond 1A	–	–	(2053)	–	–	–	–	–	–	–	–	–	–	–	–	107	–	95	–	–	–	–	–	6	–	–	–
LakeCreek Pond 1B	–	–	(1908)	–	–	–	–	–	–	–	–	–	–	–	–	42	–	54	–	–	–	–	–	6	–	–	–
LakeCreek Pond 1C	–	–	(1657)	–	–	–	–	–	–	–	–	–	–	–	–	7	–	10	–	–	–	–	–	6	–	–	–
Hymeadow Pond 2A	–	–	(3048)	–	–	–	–	–	–	–	–	–	–	–	–	115	–	62	–	–	–	–	–	6	–	–	–
Hymeadow Pond 2B	–	–	(1529)	–	–	–	–	–	–	–	–	–	–	–	–	2	–	7	–	–	–	–	–	6	–	–	–
Hymeadow Pond 2C	–	–	(2260)	–	–	–	–	–	–	–	–	–	–	–	–	50	–	34	–	–	–	–	–	6	–	–	–
Hymeadow Pond 2D1	–	–	(3286)	–	–	–	–	–	–	–	–	–	–	–	–	212	–	124	–	–	–	–	–	6	–	–	–
Hymeadow Pond 2D2	–	–	(4381)	–	–	–	–	–	–	–	–	–	–	–	–	1893	–	735	–	–	–	–	–	6	–	–	–
Pond Springs Pond	1.04	93	5300	–	441	–	5056	–	2420	4840	121	1403	–	45	–	1656	–	336	57.8	5002	78	–	–	13	–	44	–
Pond Springs Detention Pond	1.15	1162	22610	308	–	1459	2780	–	3391	6782	279	363	2186	141	50	2056	756	1135	–	24431	280	120	140	0	–	–	–
Woods Pond	7.1	2640	64420	1202	8970	–	34364	437	18275	36550	859	6500	6500	275	–	2016	–	649	–	–	166.5	–	–	75	152	–	–
TOTAL	9.29	3895	99643	1510	10303	1459	44,344	437	25158	50316	1313	8266	8686	461	50	12286	756	5406	139.1	39244	529.6	120	1195	171	152	44	468

	ITEM 462	ITEM 462	ITEM 462	ITEM 462	ITEM 462	ITEM 462	ITEM 464	ITEM 464	ITEM 464	ITEM 464	ITEM 465	ITEM 465	ITEM 465	ITEM 465	ITEM 466	ITEM 466	ITEM 466	ITEM 466	ITEM 466	ITEM 466	ITEM 466	ITEM 467	ITEM 481	ITEM 481	ITEM 481	ITEM 481	ITEM 529	ITEM 530
	Conc Box Culv (4'x4')	Conc Box Culv (6'x4')	Conc Box Culv (6'x5')	Conc Box Culv (7'x4')	Conc Box Culv (8'x4')	Conc Box Culv (8'x6')	RCP SEW (D-LOAD) (18")	RCP SEW (D-LOAD) (24")	RCP SEW (D-LOAD) (36")	RCP SEW (D-LOAD) (48")	MAN H (COMPL) TY A	INLET (COMPL) (DROP) (TY I)	INLET (COMPL) (DROP) (TY IB)	INLET (COMPL) (DROP) (TY II)	CULV HDWLL TY PW-45	CULV HDWLL TY MCW-P-15 MOD	CULV HDWLL TY MCW-P-30 MOD	CULV HDWLL TY MCW-P-45 MOD	CULV HDWLL TY MCW-F1-30	CULV HDWLL TY FW-N	CULV HDWLL TY FW-45	S.E.T. TYII	* P.V.C. PIPE (SCH 40) 4"	* P.V.C. PIPE (SCH 40) 6"	* P.V.C. PIPE (SCH 40) 8"	* P.V.C. PIPE (SCH 40) 12"	* CONC. CURB (TY II) (6 IN)	CONC. DRVWY
	LF	LF	LF	LF	LF	LF	LF	LF	LF	LF	EA	EA	EA	EA	EA	EA	EA	EA	EA	EA	EA	EA	LF	LF	LF	LF	LF	SY
620 Median Pond	–	468	–	–	–	–	1487	–	–	210	–	–	–	–	–	–	–	–	–	–	–	1	324	–	77	–	–	21
LakeCreek Pond 1A	–	–	–	–	–	–	–	–	–	–	–	–	–	–	–	–	–	–	–	–	–	–	144	25	100	–	–	–
LakeCreek Pond 1B	–	–	–	–	–	–	–	–	–	–	–	–	–	–	–	–	–	–	–	–	–	–	114	24	58	–	–	–
LakeCreek Pond 1C	–	–	–	–	–	–	–	–	–	–	–	–	–	–	–	–	–	–	–	–	–	–	120	25	14	–	–	–
Hymeadow Pond 2A	–	–	–	–	–	–	6	–	–	–	1	–	–	–	–	–	–	–	–	–	–	–	138	25	65	–	–	–
Hymeadow Pond 2B	–	–	–	–	–	–	–	–	–	–	–	–	–	–	–	–	–	–	–	–	–	–	63	25	11	–	–	–
Hymeadow Pond 2C	–	–	–	–	–	–	–	–	–	–	–	–	–	–	–	–	–	–	–	–	–	–	156	25	38	–	–	–
Hymeadow Pond 2D1	–	–	–	–	–	–	70	–	–	–	–	–	–	–	–	–	–	–	–	–	–	–	288	25	54	–	–	–
Hymeadow Pond 2D2	–	–	–	–	–	–	735	–	–	–	1	–	–	–	–	–	–	–	–	–	–	–	252	27	5	–	–	–
Pond Springs Pond	44	–	–	–	–	–	–	–	–	–	–	–	–	–	–	–	–	–	–	–	–	–	704	–	357	–	–	42
Pond Springs Detention Pond	–	–	96	–	81	84	–	136	287	563	2	3	1	3	–	2	2	–	–	1	–	–	–	–	–	–	90	30
Woods Pond	–	–	30	175	333	28	66	–	–	–	–	2	–	–	1	–	–	1	1	–	1	6	–	–	–	75	–	37
TOTAL	44	468	126	175	414	112	2364	136	287	773	4	5	1	3	1	2	2	1	1	1	1	7	2303	201	779	75	90	130

	ITEM 531	ITEM 550	ITEM 550	ITEM 550	ITEM 3116	ITEM 3116	ITEM 3116	ITEM 5014	ITEM 5014	ITEM 5014	ITEM 8608
	CONC. WALKWAY (5 IN)	CHAIN LINK FENCE (6FT)	VEH. GATE (DOUBLE) (12FT)	VEH. GATE (DOUBLE) (20FT)	ASPH CONC (TY C) (SURF) (PV 32 MIN)	ASPH CONC. (TY C) 2"	ASPH CONC. (TY C) 1½"	GABIONS (3'X1') (GALV)	GABIONS (3'X3') (GALV)	GABIONS (6'X0.5') (GALV)	SAND FILTER SYSTEM
	SY	LF	EA	EA	TONS	TONS	TONS	CY	CY	CY	EA
620 Median Pond	–	–	–	2	–	–	–	–	20	6.7	1 (60'X64')
LakeCreek Pond 1A	–	–	–	–	–	–	–	6.6	10	–	1 (29'X30')
LakeCreek Pond 1B	–	–	–	–	–	–	–	6.6	10	–	1 (24'X30')
LakeCreek Pond 1C	–	–	–	–	–	–	–	6.6	10	–	1 (25'X30')
Hymeadow Pond 2A	–	–	–	–	–	–	–	6.6	10	–	1 (28'X30')
Hymeadow Pond 2B	–	–	–	–	–	–	–	6.6	10	–	1 (15'X30')
Hymeadow Pond 2C	–	–	–	–	–	–	–	6.6	10	–	1 (29'X30')
Hymeadow Pond 2D1	–	–	–	–	–	–	–	6.6	10	–	1 (30'X37')
Hymeadow Pond 2D2	–	–	–	–	–	–	–	6.6	10	–	1 (30'X47')
Pond Springs Pond	–	1050	2	–	–	8.3	–	–	38	10.3	1 (40'X93')
Pond Springs Detention Pond	46	2060	1	–	12	4.1	7.7	–	–	–	–
Woods Pond	–	2010	1	–	–	56.2	–	–	–	–	–
TOTAL	46	5120	4	2	12	68.6	7.7	52.8	138	17.0	10

NOTES:

( ) INCIDENTAL. FOR CONTRACTOR'S INFORMATION ONLY.

* SUBSIDIARY TO VARIOUS BID ITEMS.

Turner Collie & Braden Inc.
ENGINEERS • PLANNERS • PROJECT MANAGERS

AUSTIN | Job No. 61-99100-012 | File

©1998 TxDOT

US 183
WATER QUALITY AND DETENTION POND SUMMARY SHEET

SCALE: AS NOTED

Designed	FED. RD. DIV. NO.	STATE	FEDERAL AID PROJECT NO.		HIGHWAY NO.
KKY	6	TEXAS	NH 09(556)		US 183
Drawn	STATE DIST. NO.	COUNTY	CONTROL NO.	SECTION NO.	JOB NO.	SHEET NO.
JAM	AUS	WILLIAMSON	0151	05	072	48
Checked						
DLG						

DATE: 04/10/99
JOB No.: 72-07401-022
PATH: t:\ 07401022\drainage\wqptbl2.dgn

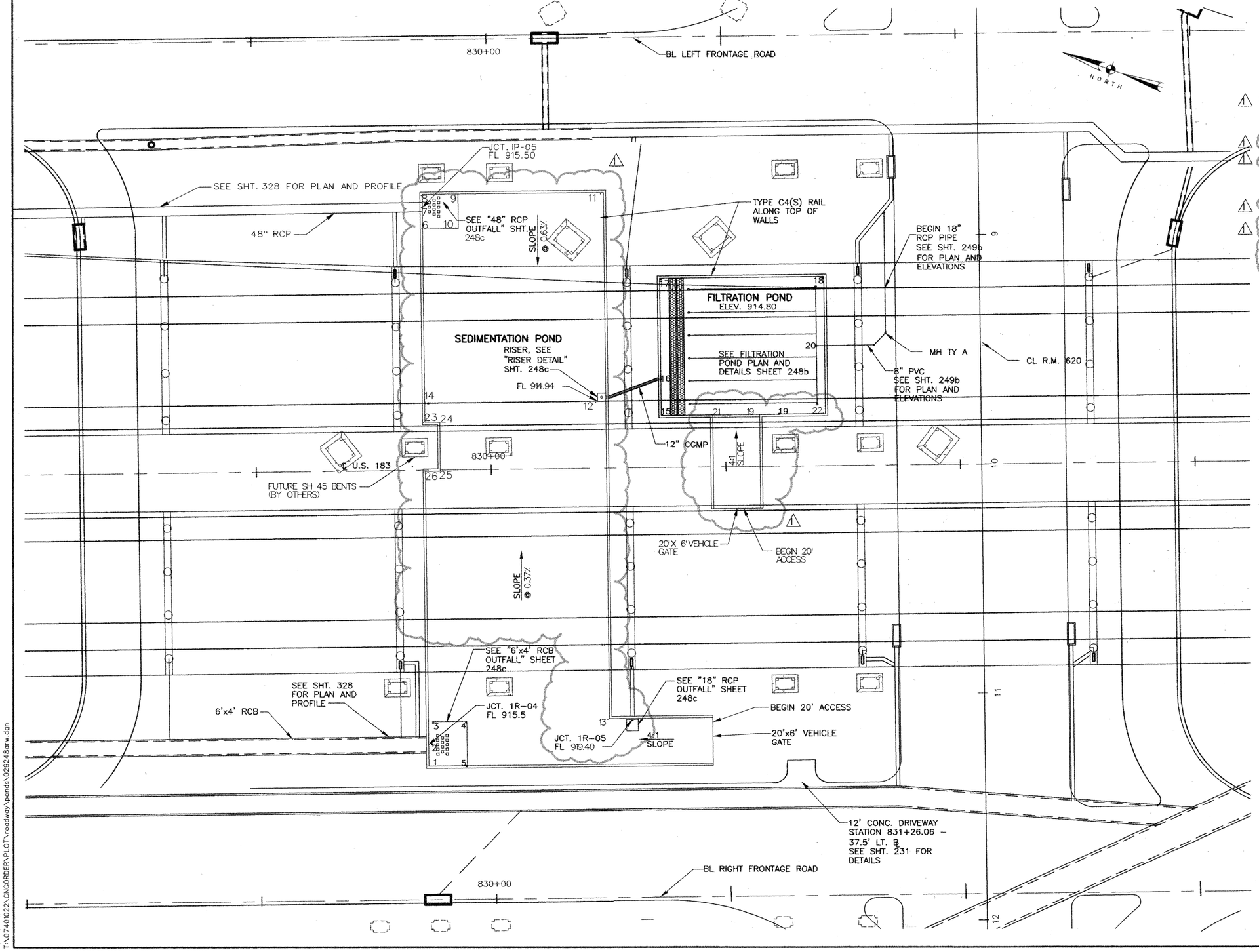

POINT LOCATION TABLE

POINT No.	STATION ℄ US 183	OFFSET	ELEV. ℄
1	829+72.23	129.83' RT.	915.52
2	829+72.23	120.00' RT.	915.50
3			915.48
4			915.44
5			915.49
6			915.46
7	829+72.23	114.69' LT.	915.50
8			915.52
9			915.46
10			915.41
11			915.50
12	830+47.49	30.88' LT.	914.94
13			915.46
14	829+72.23	30.88' LT.	915.54
15	830+72.73	22.58' LT.	914.80
16	830+72.73	38.49' LT.	914.80
17			914.80
18			914.80
19			914.80
20	831+39.23	52.58' LT.	
21	830+94.73	22.58' LT	914.80
22	831+42.73	22.58' LT	914.80
23	829+72.00	20.65' LT	914.97
24	829+78.41	20.65' LT	914.92
25	829+78.41	0.86' RT	915.00
26	829+72.00	0.86' RT	915.05

NOTES:

1. SEE WATER QUALITY PONDS STRUCTURAL DETAILS, SHT. 261e, FOR POND DIMENSIONS AND REINFORCEMENT.

2. FOR CURRENT INFORMATION ABOUT GRAVITY & FORCE MAINS IN REFERENCE TO CHANGE ORDER #10, CONTACT CITY OF AUSTIN WATER & WASTEWATER DEPT.

STATE OF TEXAS — C.D. BILLS — 83877 — LICENSED PROFESSIONAL ENGINEER — 5-3-99

STATE OF TEXAS — DAVID L. GARRETT — 76626 — REGISTERED PROFESSIONAL ENGINEER — 6/22/01 — For Revision #1 Only

NO.	DATE	REVISION	APPROV.
4			
3			
2			
1	6/01	CHANGE ORDER 10	

Turner Collie & Braden Inc.
ENGINEERS • PLANNERS • PROJECT MANAGERS

Unit: AUSTIN | Job No.: 72-07401-022 | File:

Texas Department of Transportation

© 1998 TxDOT

620 MEDIAN
WATER QUALITY POND LAYOUT

SCALE: 1"=20'

Designed	CH	FED. RD. DIV. NO.	STATE	FEDERAL AID PROJECT NO.				HIGHWAY NO.
Detailed	DLG	6	TEXAS	NH 99(558)				U.S.183
Checked	RP	STATE DIST. NO.	COUNTY	CONTROL NO.	SECTION NO.	JOB NO.		SHEET NO.
Quantities	DLG	14	WILLIAMSON	0151	05	072		248a

09-27104
22 JUN 2001
T:\0740102\CNGORDER\PLOT\roadway\ponds\029248arw.dgn

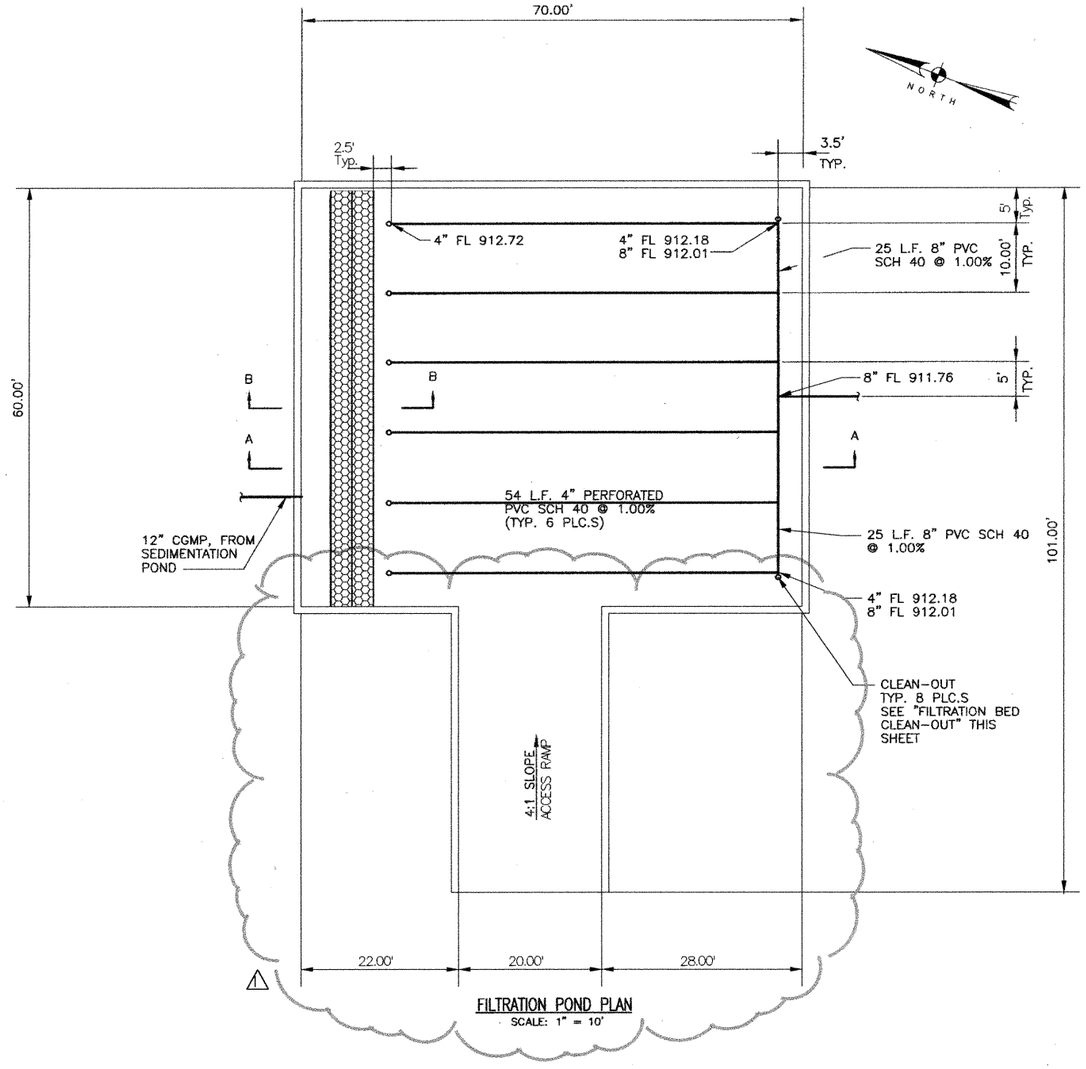

FILTRATION POND PLAN
SCALE: 1" = 10'

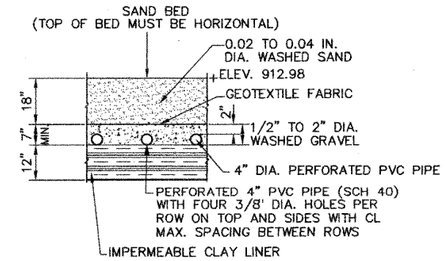

SAND FILTRATION BED SECTION
SCALE: 1/2" = 1'-0"

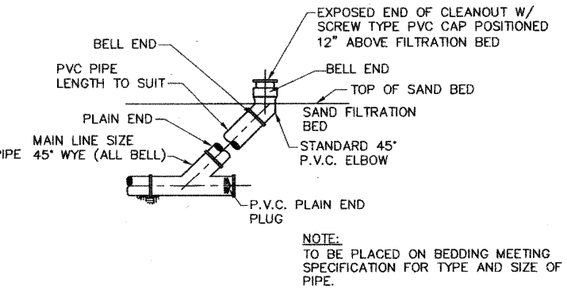

NOTE:
TO BE PLACED ON BEDDING MEETING SPECIFICATION FOR TYPE AND SIZE OF PIPE.

FILTRATION BED CLEAN-OUT
SCALE: 1/2" = 1'-0"

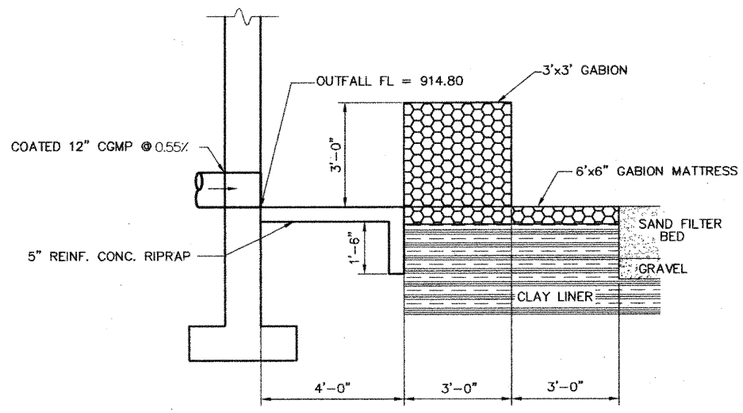

SECTION B-B
SCALE: 1/2" = 1'-0"

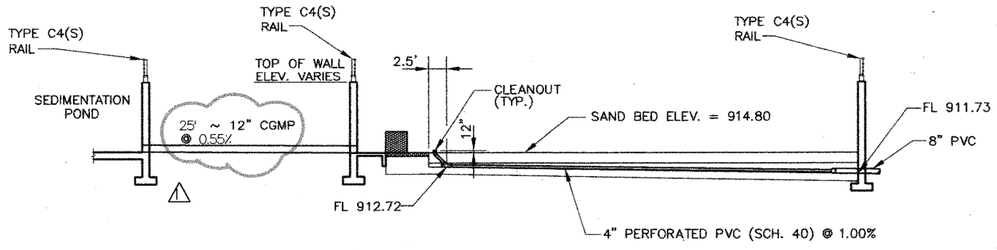

FILTRATION POND SECTION A-A
SCALE: 1" = 10'

NOTE:

1. FOR REINFORCEMENT AND DIMENSIONS SEE WATER QUALITY PONDS STRUCTURAL DETAILS, SHT. 261e.

STATE OF TEXAS C. D. BILLS 83877 LICENSED PROFESSIONAL ENGINEER
5-3-99

STATE OF TEXAS DAVID L. GARRETT 76626 REGISTERED PROFESSIONAL ENGINEER
6/22/01
For Revision #1 only

NO.	DATE	REVISION	APPROV.
4			
3			
2			
1	6/01	CHANGE ORDER 10	

Turner Collie & Braden Inc.
ENGINEERS • PLANNERS • PROJECT MANAGERS

AUSTIN | Job No. 72-07401-022

Texas Department of Transportation

620 MEDIAN
FILTRATION POND
PLAN AND DETAILS

Designed	CH	FED. RD. DIV. NO.	STATE	FEDERAL AID PROJECT NO.			HIGHWAY NO.
Checked	DLG	6	TEXAS	NH 99(556)			U.S.183
Drawn	RP	STATE DIST. NO.	COUNTY	CONTROL NO.	SECTION NO.	JOB NO.	SHEET NO.
Checked	GL	14	WILLIAMSON	0151	05	072	248b

09:30:10
22 JUN 2001
I:\07401022\CNGORDER\PLOT\roadway\ponds\029248brw.dgn

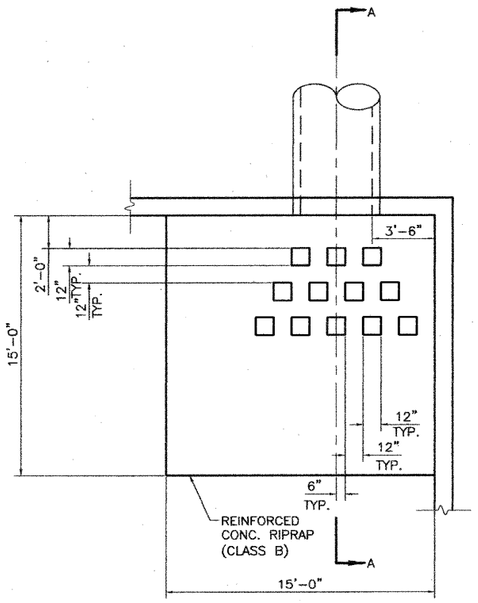

PLAN

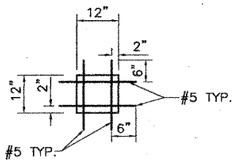

DISSIPATOR REBAR PLAN

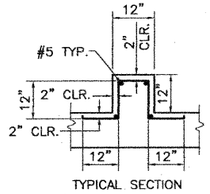

DISSIPATOR DETAIL

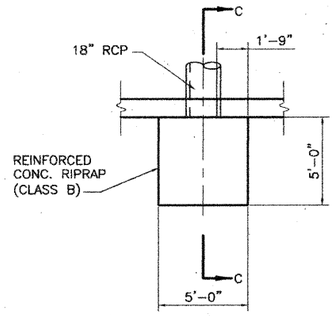

PLAN

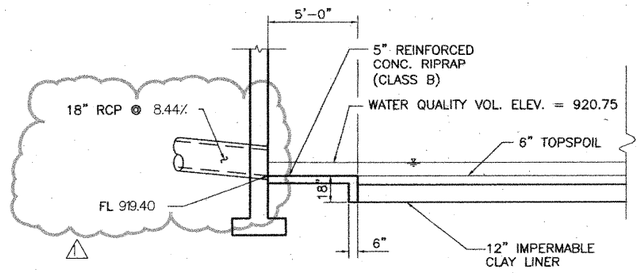

SECTION C–C

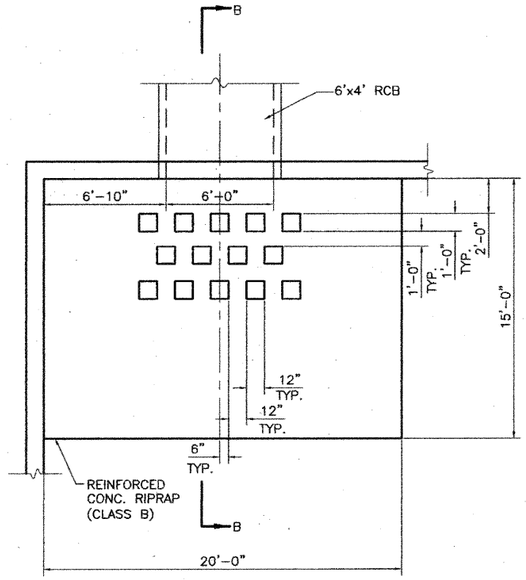

PLAN

18" RCP OUTFALL

SCALE: 1/4" = 1'-0"

NOTES:

1. FOR SPLITTER BOX AND POND WALL REINFORCEMENT SEE WATER QUALITY PONDS STRUCTURAL DETAILS, SHTS. 261f & 261e, RESPECTIVELY.
2. FOR POND LAYOUT SEE SHT 248a.

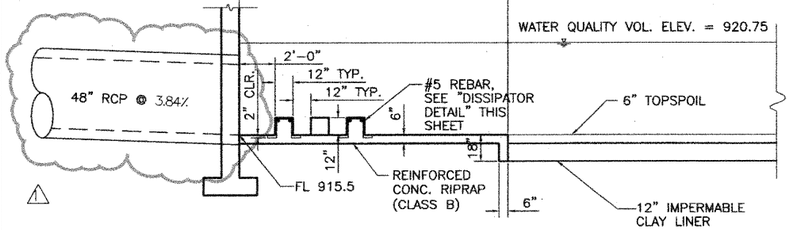

SECTION A–A

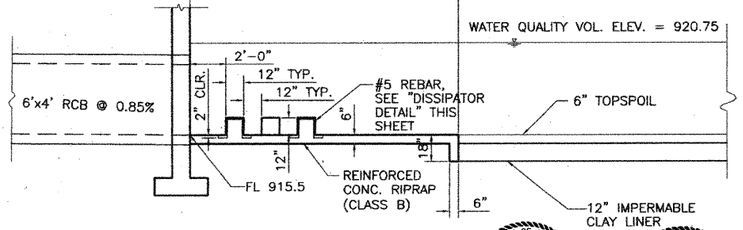

SECTION B–B

48" RCP OUTFALL

SCALE: 1/4" = 1'-0"

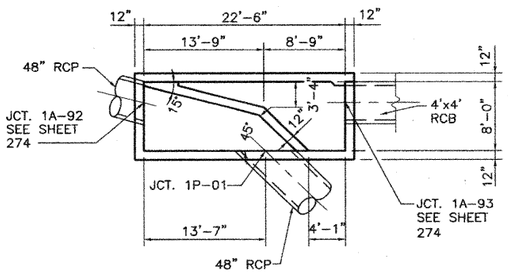

SPLITTER BOX DETAIL
LEFT SIDE

SCALE: 1" = 1/8"

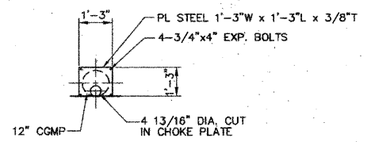

CHOKE PLATE DETAIL

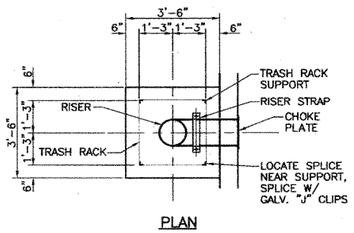

PLAN

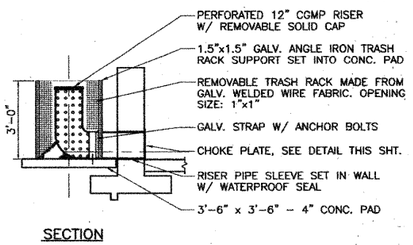

SECTION

RISER DETAIL
N.T.S

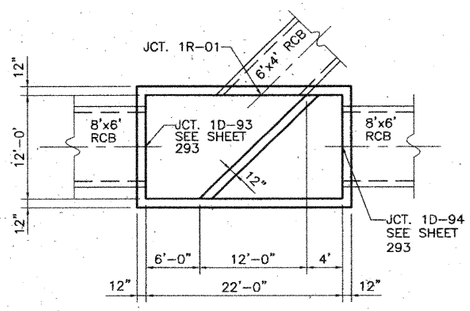

SPLITTER BOX DETAIL
RIGHT SIDE

SCALE: 1" = 1/8"

STATE OF TEXAS — DAVID L. GARRETT — 76626 — REGISTERED PROFESSIONAL ENGINEER — 6/22/01 — For Revision #1 Only

STATE OF TEXAS — C.D. BILLS — 83877 — LICENSED PROFESSIONAL ENGINEER — C.D. Bills 5-3-99

NO.	DATE	REVISION	APPROV.
4			
3			
2			
1	6/01	CHANGE ORDER 10	

Turner Collie & Braden Inc.
ENGINEERS • PLANNERS • PROJECT MANAGERS

AUSTIN — Job No. 72-07401-022

Texas Department of Transportation

© 1998 TxDOT

620 MEDIAN POND DRAINAGE DETAILS

SCALE: AS NOTED

Designed	CDB	Fed. Rd. Div. No.	STATE	FEDERAL AID PROJECT NO.				HIGHWAY NO.
Checked	DLG	6	TEXAS	NH 99(556)				U.S.183
Drawn	GWS	STATE DIST.NO.	COUNTY	CONTROL NO.	SECTION NO.	JOB NO.	SHEET NO.	
Checked	CDB	AUS	WILLIAMSON	0151	05	072	248c	

09-34144
22 JAN 2001
E:\07401022\CNCORDER\PLOT\roadway\ponds\0292480rw.dgn

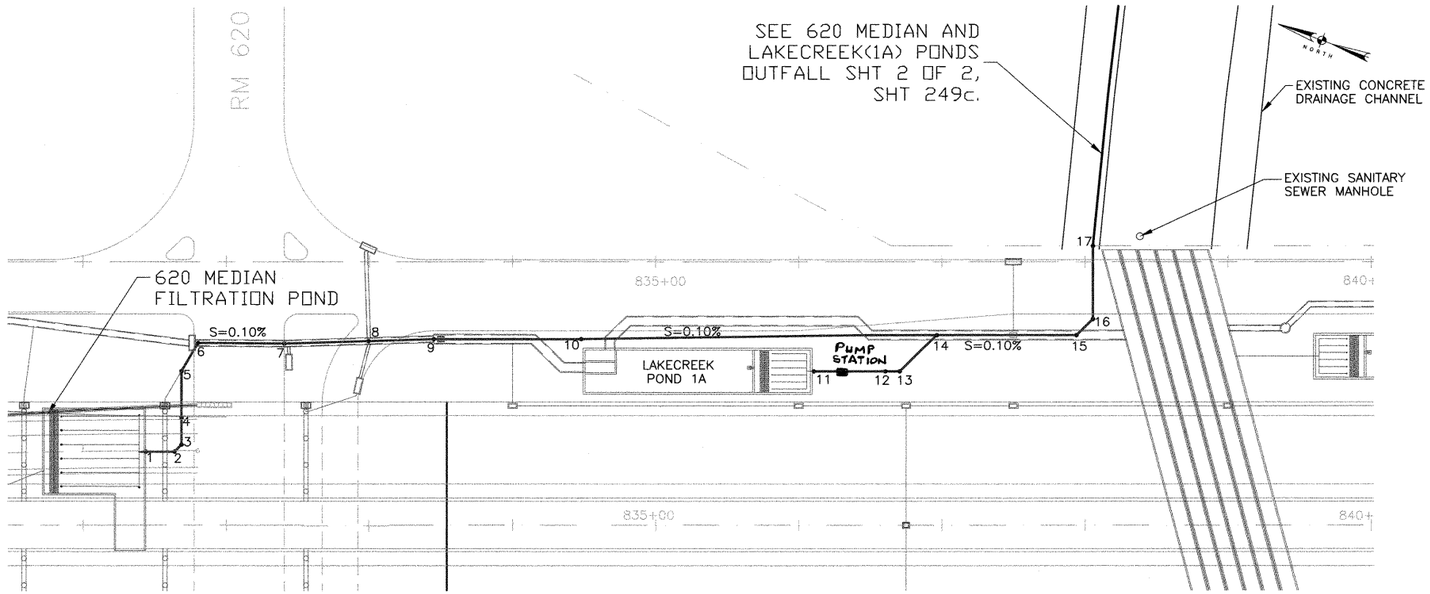

620 MEDIAN AND LAKE CREEK(1A) PONDS OUTFALL

SCALE: 1" = 50'

POINT LOCATION TABLE

POINT No.	STATION BL RT. FRT. RD.	OFFSET	ELEV. FL	PIPE SIZE/TYPE
1	831+43.73	135.92' RT.	911.72	8" PVC
2	831+63.77	135.92' RT.	911.70	8" PVC
3	831+68.73	135.95' RT.	911.69	8" PVC
4	831+68.73	112.51' RT.	911.67	8" PVC IN
	MH TY A TOP 924.1		911.00	18" RCP OUT
5	831+68.73	78.39 RT.	910.96	18" RCP
6	831+80.73	58.26' LT.	910.93	18" RCP
7	832+41.61	58.76' LT.	910.87	18" RCP
8	832+99.73	56.93' LT.	910.81	18" RCP
9	833+45.00	55.50' RT.	910.76	18" RCP
10	834+48.00	52.50' RT.	910.69	18" RCP IN
	MH TY A TOP 924.7		909.81	18" RCP OUT
11	836+10.61	78.50' RT.	909.66	8" PVC
12	836+60.50	78.50' RT.	909.61	8" PVC/18" RCP
13	836+70.50	78.50' RT.	909.60	18" RCP
14	836+96.50	52.50' RT.	909.56	18" RCP
15	837+94.00	52.50' RT.	909.46	18" RCP
16	838+05.56	40.94' RT.	909.44	18" RCP
	MH TY A TOP 922.3			
17	838+05.56	11.50' RT.	909.39	18" RCP

NOTES:

1. SEE SHT 248a FOR 620 MEDIAN FILTRATION POND PLAN.
2. SEE SHT 249a FOR LAKECREEK POND 1A LAYOUT.

PUMP STATION
TOP ELEV = 927.00
BOT. ELEV = 907.58
FE IN = 909.58
FE OUT = 918.50
C.O. #18

STATE OF TEXAS
REBECCA A. BILLS
82567
REGISTERED PROFESSIONAL ENGINEER
Rebecca A. Bills
6-3-99

Turner Collie & Braden Inc.
ENGINEERS • PLANNERS • PROJECT MANAGERS

AUSTIN | 72-07401-022

Texas Department of Transportation

©1998 TxDOT

620 MEDIAN AND LAKECREEK(1A) PONDS OUTFALL

SCALE: AS NOTED | SHT 1 OF 2

Designed	RAB	FED. RD. DIV. NO.	STATE	FEDERAL AID PROJECT NO.				HIGHWAY NO.
Checked	DLG	6	TEXAS	NH 99(556)				U.S.183
Drawn	GWS	STATE DIST. NO.	COUNTY	CONTROL NO.	SECTION NO.	JOB NO.	SHEET NO.	
Checked	DLG	14	WILLIAMSON	0151	05	072	249b	

DATE: 04/27/99
JOB NO. 72-07401-022/pd-out1.dwg

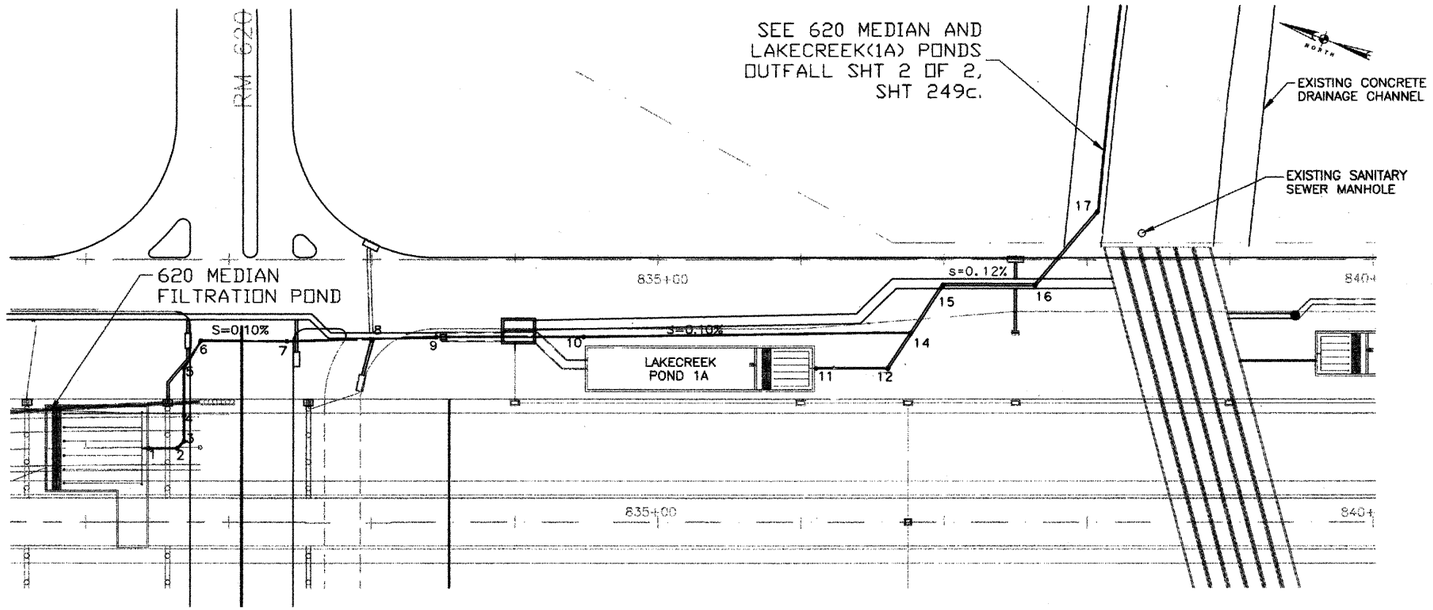

620 MEDIAN AND LAKE CREEK(1A) PONDS OUTFALL

SCALE: 1" = 50'

POINT LOCATION TABLE

POINT No.	STATION BL RT. FRT. RD.	OFFSET	ELEV. FL	PIPE SIZE/TYPE
1	831+43.73	135.92' RT.	911.72	8" PVC
2	831+63.77	135.92' RT.	911.70	8" PVC
3	831+68.73	135.95' RT.	911.69	8" PVC
4	831+68.73	112.51' RT.	911.67	8" PVC IN
	MH TY A TOP 924.1		911.00	18" RCP OUT
5	831+68.73	78.39 RT.	910.96	18" RCP
6	831+80.73	58.26' RT.	910.93	18" RCP
7	832+41.61	58.76' RT.	910.87	18" RCP
8	832+99.73	56.93' RT.	910.81	18" RCP
9	833+45.00	55.50' RT.	910.76	18" RCP
10	834+48.00	52.50' RT.	910.69	18" RCP IN
	MH TY A TOP 924.7		909.81	18" RCP OUT
11	836+10.61	78.50' RT.	909.66	8" PVC
12	836+60.50	78.50' RT.	909.61	8" PVC/18" RCP
~~13~~	~~836+70.50~~	~~78.50' RT.~~	~~909.60~~	~~18" RCP~~
14	836+77.38	52.50' RT.	909.58	18" RCP
	MH TY A TOP = 922.92			
15	836+88.57	17.81' RT.	909.54	18" RCP
16	837+64.00	17.81' RT.	909.47	18" RCP
	~~MH TY A TOP 922.3~~			
17	838+08.33	35.40'LT.	909.36	18" RCP
	MH TY A TOP = 922.78			

NOTES:

1. SEE SHT 248a FOR 620 MEDIAN FILTRATION POND PLAN.
2. SEE SHT 249a FOR LAKECREEK POND 1A LAYOUT.

STATE OF TEXAS MARK E. JONES 81987 REGISTERED PROFESSIONAL ENGINEER

Mark E. Jones 10-04-00 ONLY

STATE OF TEXAS REBECCA A. BILL 82867 REGISTERED PROFESSIONAL ENGINEER

Rebecca A. Bill 6-3-99

1	CHANGE ORDER NO. 10	

Turner Collie & Braden Inc.
ENGINEERS • PLANNERS • PROJECT MANAGERS

AUSTIN | 72-07401-022

Texas Department of Transportation

©1998 TxDOT

620 MEDIAN AND LAKECREEK(1A) PONDS OUTFALL

SCALE: AS NOTED

SHT 1 OF 2

RAB		STATE	FEDERAL AID PROJECT NO.				
DLG	6	TEXAS	NH 99(556)				U.S.183
GWS	STATE DIST.NO.	COUNTY					
DLG	14	WILLIAMSON	0151	05	072	249bA	

CHANGE ORDER NO. 10

DATE: 04/27/99
JOB NO. 72-07401-022/pd-out1.dwg

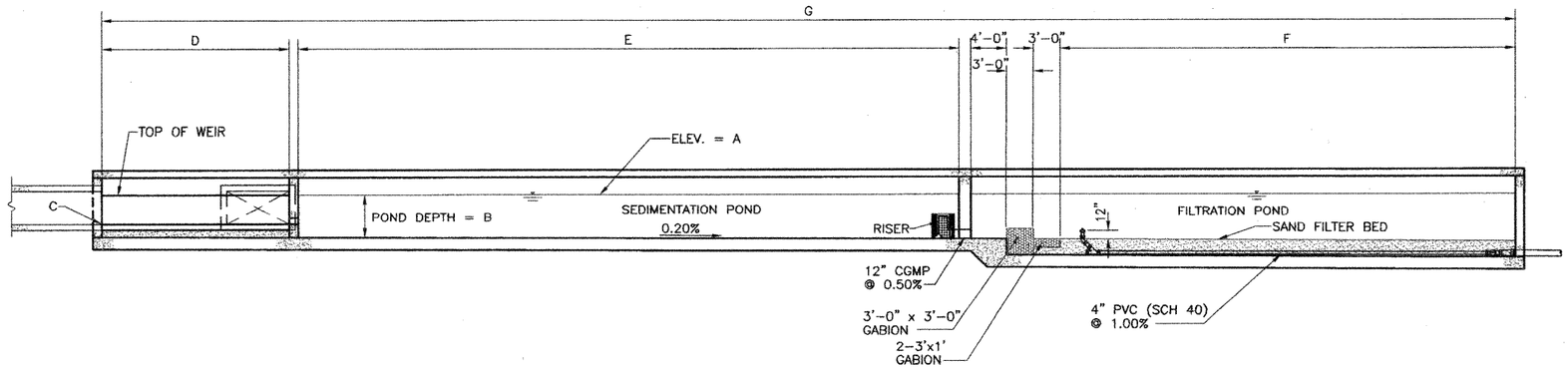

TYPICAL SECTION

SCALE: 1/8" = 1'-0"

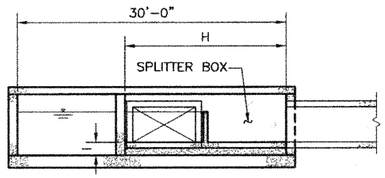

TYPICAL SECTION

SCALE: 1/8" = 1'-0"

POND	A	B	C	D ⚠1	E	F	G	H	I ⚠1	J
1A	917.78	5'-0"	914.28	N/A	96'-0"	29'-0"	158'-4"	18'-0"	N/A	2 3/8"
1B	921.00	5'-0"	918.50	14'-6"	76'-0"	24'-0"	126'-10"	10'-0" ⚠1	2'-6"	2 3/16"
1C	922.75	6'-0"	918.50	14'-6"	65'-0"	25'-0"	116'-10"	18'-0"	1'-9"	2 1/8"
2A	920.92	5'-0"	917.42	14'-6"	91'-0"	28'-0"	145'-10"	10'-0"	1'-6"	2 3/16"
2B	923.49	5'-0"	921.99	14'-6"	43'-0"	15'-0"	84'-10"	10'-0"	3'-6"	1 11/16"
2C	925.90	6'-6"	923.90	14'-6"	76'-0"	31'-0"	133'-10"	10'-0"	4'-6"	1 15/16"
2D1	923.63	5'-6"	920.63	21'-0"	109'-0"	37'-0"	179'-4"	12'-0"	2'-6"	2 5/8"
2D2	921.85	6'-0"	916.85	12'-0"	138'-0"	47'-0"	209'-3"	21'-0"	1'-0"	2 7/8"

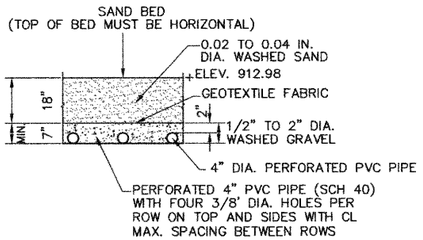

SAND FILTRATION BED SECTION

SCALE: 1/2" = 1'-0"

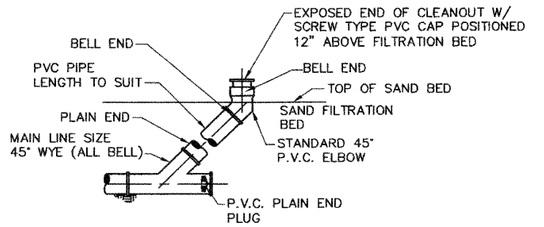

NOTE:
TO BE PLACED ON BEDDING MEETING SPECIFICATION FOR TYPE AND SIZE OF PIPE.

FILTRATION BED CLEAN-OUT

SCALE: 1/2" = 1'-0"

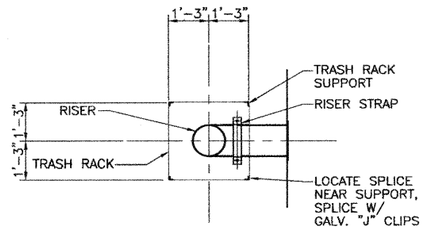

PLAN

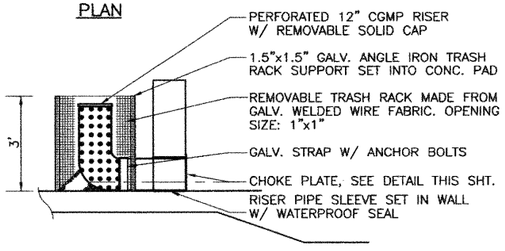

SECTION

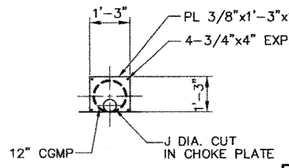

CHOKE PLATE DETAIL

RISER DETAIL

N.T.S.

STATE OF TEXAS
DAVID L. GARRETT
76626
REGISTERED
PROFESSIONAL ENGINEER
6/22/01
For Revision #1 Only

STATE OF TEXAS
REBECCA A. BILLS
82587
REGISTERED
PROFESSIONAL ENGINEER
Rebecca A. Bills
5-3-99

NOTES:

1. SEE WATER QUALITY PONDS STRUCTURAL DETAILS SHEETS 261a – 261d FOR POND DIMENSIONS AND REINFORCEMENT.
2. SEE STORM SEWER PROFILE SHEETS FOR FLOWLINES OF RCPs/RCBs AT SPLITTER BOX.

NO.	DATE	REVISION	APPROV.
4			
3			
2			
⚠1	6/01	CHANGE ORDER 10	

Turner Collie & Braden Inc.
ENGINEERS • PLANNERS • PROJECT MANAGERS

AUSTIN | Job No. 72-07401-022 | File

Texas Department of Transportation

© 1998 TxDOT

UNDERGROUND WATER QUALITY POND TYPICAL SECTIONS AND DETAILS

SCALE: AS NOTED

Designed	CH	FED. RD. DIV. NO.	STATE	FEDERAL AID PROJECT NO.				HIGHWAY NO.
Detailed	DLG	6	TEXAS	NH 99(556)				U.S.183
Checked	RP	STATE DIST. NO.	COUNTY	CONTROL NO.	SECTION NO.	JOB NO.	SHEET NO.	
Quantities	Q.	AUS	WILLIAMSON	0151	05	072	257	

0940103
2001
FILE: C:\07401022\CNGORDER\PLOT\roadway\boards\029257nw.dgn

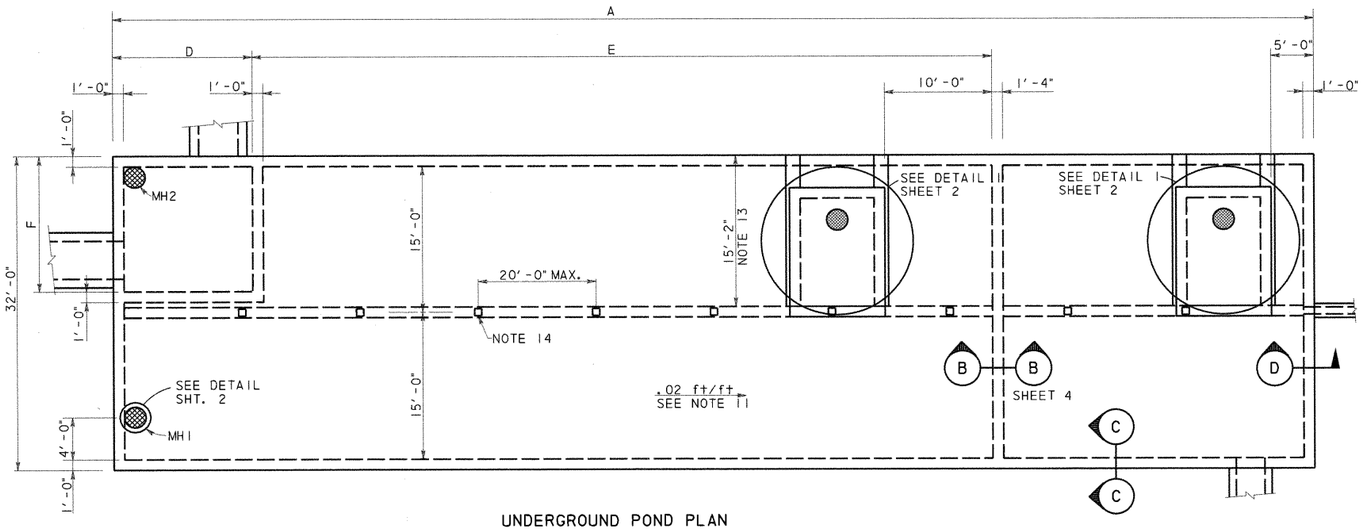

UNDERGROUND POND PLAN

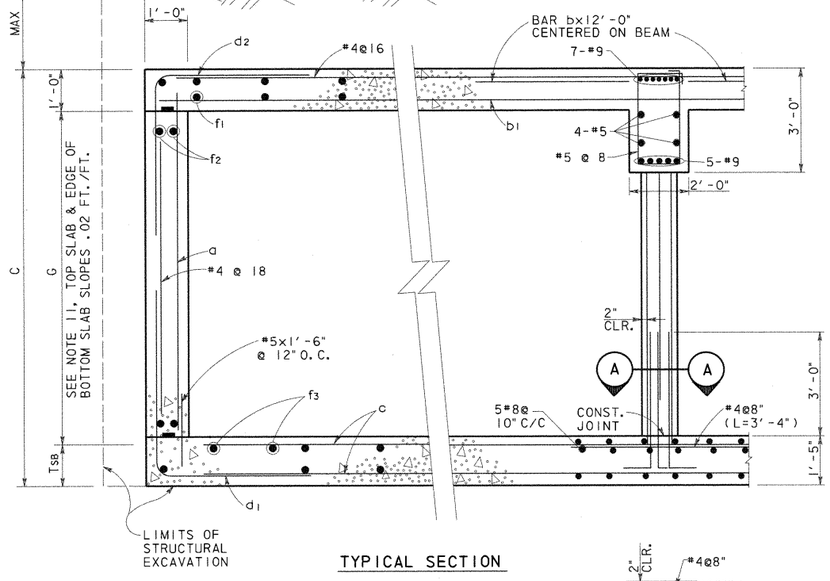

TYPICAL SECTION

SECTION C-C
N. T. S.

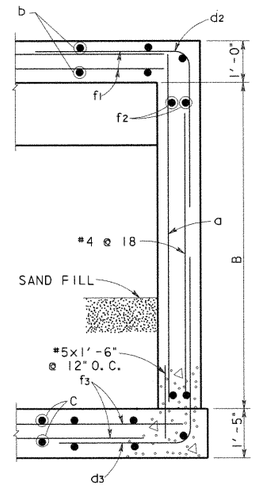

SECTION D-D
N. T. S.

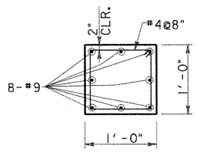

SECTION A-A
SCALE: 1"=1'-0"

UNDERGROUND POND REINFORCING TABLE																		
POND DESIGNATION	BARS a		BARS b		BARS b1		BARS c		BARS d1		BARS d2		BARS d3		BARS f1, f2, f3(#4)			
	SIZE	SPA.	SIZE	SPA.	SIZE	SPA.	SIZE	SPA.	SIZE	SPA.	SIZE	SPA.	SIZE	SPA.	f1 Spa.	f2 Spa.	f3 Spa.	
1A	#6	@12"	#8	@8"	#6	@8"	#8	@10"	#6	@6"	#6	@6"	#6	@6"	@6"	@12"	@7"	
1B	#6	@12"	#8	@8"	#6	@8"	#8	@10"	#6	@6"	#6	@6"	#6	@6"	@6"	@12"	@7"	
1C	#6	@12"	#8	@8"	#6	@8"	#8	@10"	#7	@6"	#6	@6"	#7	@6"	@6"	@12"	@7"	
2A	#6	@12"	#8	@8"	#6	@8"	#8	@10"	#6	@6"	#6	@6"	#6	@6"	@6"	@12"	@7"	
2B	#6	@12"	#8	@8"	#6	@8"	#8	@10"	#6	@6"	#6	@6"	#6	@6"	@6"	@12"	@7"	
2C	#7	@12"	#8	@8"	#6	@8"	#8	@10"	#7	@6"	#6	@6"	#8	@6"	@6"	@12"	@7"	
2D1	#7	@12"	#8	@8"	#6	@8"	#8	@10"	#7	@6"	#6	@6"	#8	@6"	@6"	@12"	@7"	
2D2	#7	@12"	#8	@8"	#6	@8"	#8	@10"	#7	@6"	#6	@6"	#8	@6"	@6"	@12"	@7"	

UNDERGROUND POND DIMENSION TABLE											
POND DESIGNATION	A	B	C	D	E	F	G			MAX FILL	AVERAGE FILL
1A	160'-4"	9'-2"	9'-3"	22'-0"	97'-0"	19'-0"	7'-0"			11'-0"	7'-6"
1B	128'-10"	9'-2"	9'-3"	15'-6"	77'-0"	11'-0"	7'-0"			8'-6"	5'-6"
1C	118'-10"	9'-8"	9'-9"	15'-6"	66'-0"	11'-0"	7'-6"			8'-3"	5'-6"
2A	147'-10"	9'-2"	9'-3"	15'-6"	92'-0"	11'-0"	7'-0"			9'-3"	6'-9"
2B	86'-10"	9'-2"	9'-3"	15'-6"	44'-0"	11'-0"	7'-0"			6'-9"	4'-9"
2C	133'-10"	10'-2"	10'-3"	15'-6"	77'-0"	11'-0"	8'-0"			4'-9"	3'-6"
2D1	181'-4"	10'-2"	10'-3"	22'-0"	110'-0"	13'-0"	8'-0"			11'-10"	7'-3"
2D2	211'-4"	10'-2"	10'-3"	13'-0"	139'-0"	22'-0"	8'-0"			9'-5"	7'-9"

GENERAL NOTES: UNDERGROUND PONDS

1. DESIGNED ACCORDING TO CURRENT AASHTO 1996 STANDARD SPECIFICATIONS.
2. DESIGNED FOR HS20 LOADING AND TO THE MAXIMUM FILL HEIGHT SHOWN.
3. ALL REINFORCING SHALL BE GRADE 60 KSI.
4. ALL CONCRETE SHALL BE CLASS "C".
5. REINFORCING BARS SHALL BE ADJUSTED TO PROVIDE A MINIMUM OF 1½" CLEAR COVER, UNLESS OTHERWISE NOTED.
6. ALL DIMENSIONS ARE IN FEET AND INCHES AND ALL MASS IS IN POUNDS UNLESS OTHERWISE NOTED.
7. SEE POND LAYOUT SHEETS FOR POND ORIENTATION AND LOCATION; PLUS THE ORIENTATION, SIZE AND LOCATION OF INCOMING AND OUTGOING DRAINAGE LINES.
8. WATERSTOPS SHALL BE HYDROPHILIC WATERSTOPS SUCH AS ADEKA MC-2010M.
9. PROVIDE 3" CLEARANCE WHERE CAST AGAINST SOIL.
10. PROVIDE CONSTRUCTION JOINTS IN WALLS AT A MAXIMUM SPACING OF 30 FOOT ON CENTER. MAXIMUM SLAB AREA TO BE PLACED WITHOUT CONSTRUCTION JOINTS IS 3000 SQUARE FEET. SLAB AND WALL CONSTRUCTION JOINTS SHALL ALIGN.
11. SEE POND LAYOUT FOR FLOWLINE. BOTTOM SLAB SHALL PROVIDE A .02 FT/FT SLOPE ALONG THE EDGE OF WALL. PERIMETER WALL HEIGHT (G) SHALL BE CONSTANT.
12. OFF SET RISER TO MISS ROOF SLAB BEAM.
13. AT UNDERGROUND PONDS 2C AND 2D2 THE ACCESS HATCH IS OPPOSITE HAND FROM WHAT IS SHOWN AND IS LOCATED FROM THE OPPOSITE WALL TO AVOID INTERFERENCE WITH THE DRAINAGE DITCH.
14. COLUMN SPACING IS 20.0 FT O.C. MAX. UNLESS NOTED OTHERWISE. THERE WILL BE NO COLUMNS WITHIN THE SPLITTER BOX, WHERE SPLITTER BOX EXTENDS TO THE ROOF BEAM OR BEYOND THE BEAM IS SUPPORTED BY THE SPLITTER BOX WALLS.
15. LAP TOP BARS @ MID SPAN AND BOTTOM BARS @ SUPPORTS.

ESTIMATED QUANTITIES*			
POND DESIGNATION	CONCRETE (CY)	REINFORCING BARS (LBS)	EXCAVATION (CY)
1A	623	144,925	
1B	505	115,855	
1C	476	109,213	
2A	572	131,682	
2B	356	82,752	
2C	536	123,427	
2D1	712	165,990	
2D2	823	191,615	

* QUANTITIES FOR CONTRACTOR'S ESTIMATE ONLY. ALL ITEMS ARE SUBSIDIERY TO THE POND ITEM.

STATE OF TEXAS
WILLY R. BURNS
44162
REGISTERED
ENGINEER
4/2/99

NO. DATE REVISION APPROVED

Turner Collie & Braden Inc.
Engineers • Planners • Project Managers

DATE SUTTON JOB NO. 62-14004-011 ADDENDUM

© 1998 Texas Department of Transportation

US 183

WATER QUALITY PONDS
STRUCTURAL DETAILS

SHEET 1 OF 11

Designed	WRB	FED. RD. DIV. NO.	STATE	FEDERAL AID PROJECT NO.				HIGHWAY NO.
Checked		6	TEXAS	NH99(556)				US 183
Drawn	MR	STATE DIST. NO.	COUNTY	CONTROL NO.	SECTION NO.	JOB NO.		SHEET NO.
Checked		14	WILLIAMSON	151	5	072		261a

UGPDTL1.DGN

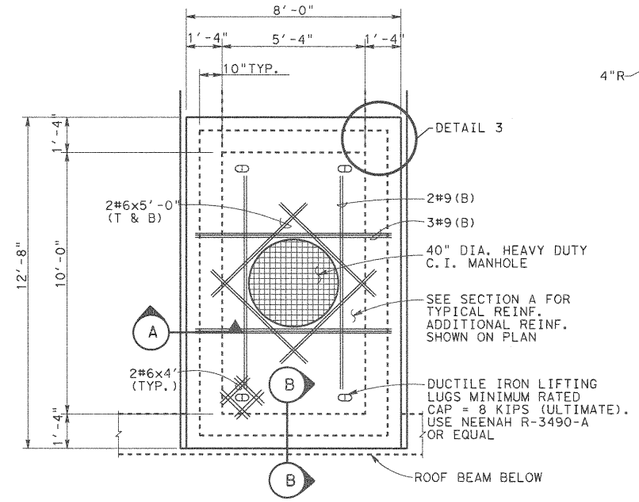

MAINTENANCE ACCESS HATCH

DETAIL 1

SCALE: 3/8" = 1'-0"

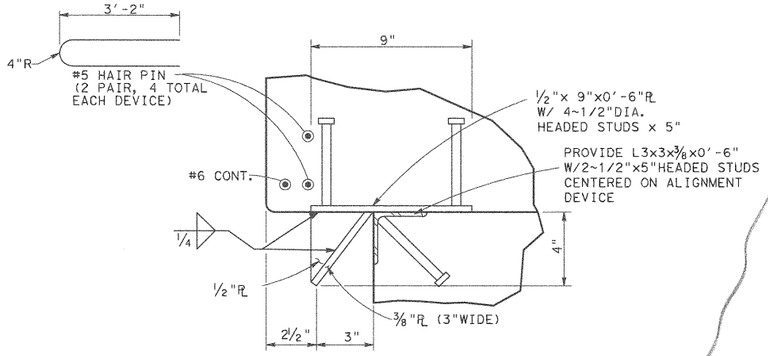

PROVIDE 8 DEVICES (GALV. AFTER FABRICATION) 2 EACH SIDE

DETAIL 2

ALIGNMENT DEVICE

SCALE: 3" = 1'-0"

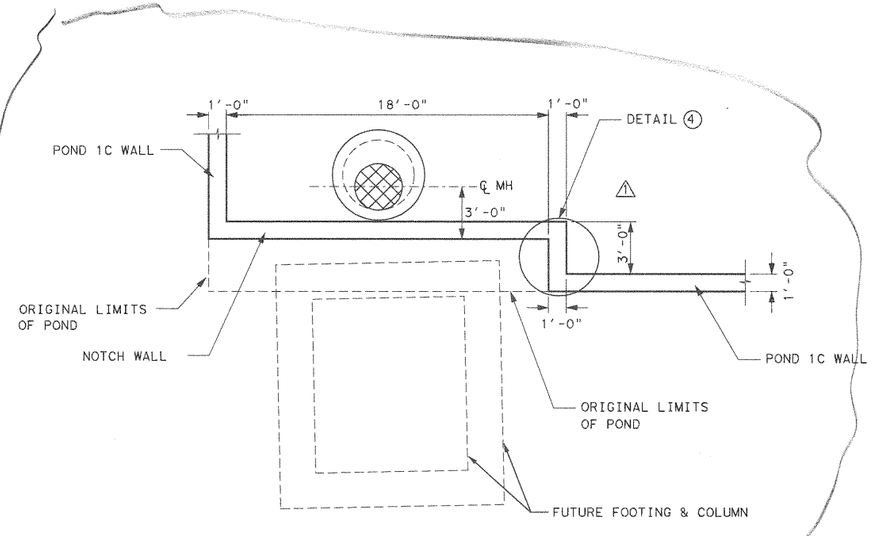

POND 1C MODIFICATION

SCALE: 3" = 1'-0"

SECTION A

SCALE: 1/2" = 1'-0"

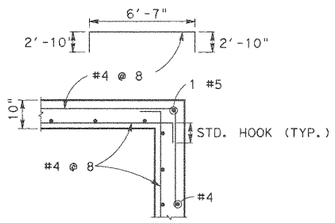

DETAIL 3

HORIZONTAL REINFORCEMENT

SCALE: 1/2" = 1'-0"

ACCESS HATCH		
POND	H1 (±)	ELEV. A
1A	8'-8"	929.20
1B	6'-7"	931.98
1C	6'-7"	931.62
2A	8'-4"	932.04
2B	5'-10"	932.20
2C	4'-10"	933.06
2D1	7'-4"	934.04
2D2	7'-11"	932.50

MANHOLE TABLE		
POND	H2	H3
1A	9'-0"	5'-0"
1B	9'-0"	4'-0"
1C	8'-0"	4'-0"
2A	9'-0"	4'-0"
2B	7'-0"	4'-0"
2C	3'-0"	5'-0"
2D1	10'-0"	4'-0"
2D2	7'-0"	5'-0"

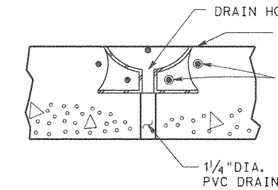

SECTION B

SCALE: 1"= 1'-0"

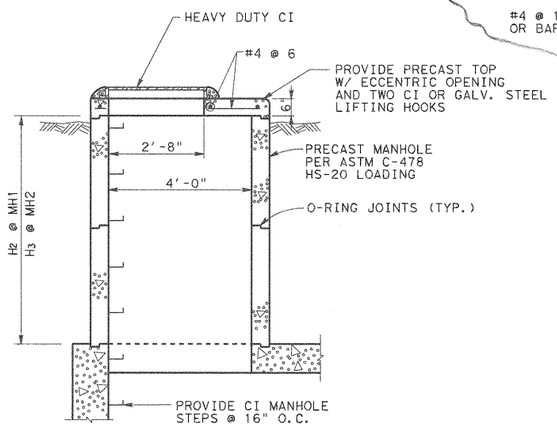

MANHOLE DETAIL

SCALE: 1/2" = 1'-0"

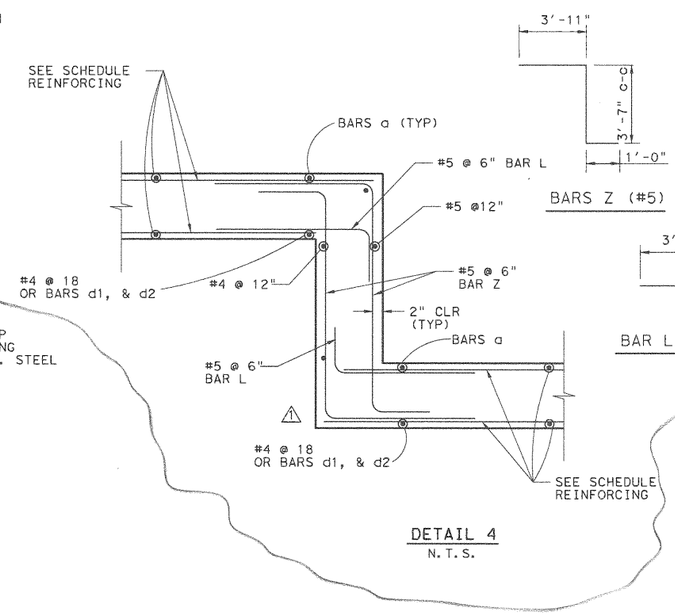

DETAIL 4

N.T.S.

STATE OF TEXAS
WALLY R. BURNS
44162
REGISTERED PROFESSIONAL ENGINEER
Wally R Burns
01/29/01

1	JAN. 26 01	ADD NOTCH	WRB
NO.	DATE	REVISION	APPROVED

Turner Collie & Braden Inc.
Engineers • Planners • Project Managers

TRANSPORTATION | Unit | Job No. 81-07401-024 | Approved

© 1998 Texas Department of Transportation

US 183
WATER QUALITY PONDS
STRUCTURAL DETAILS

SCALE: AS NOTED — SHEET 2 OF 11

Designed	Checked	Drawn	Checked	FED. RD. DIV. NO.	STATE	FEDERAL AID PROJECT NO.				HIGHWAY NO.
WRB		MR		6	TEXAS	NH99(556)				US 183
				STATE DIST. NO.	COUNTY	CONTROL NO.	SECTION NO.	JOB NO.		SHEET NO.
				14	WILLIAMSON	151	5	072		261b

UGPDT2.DGN

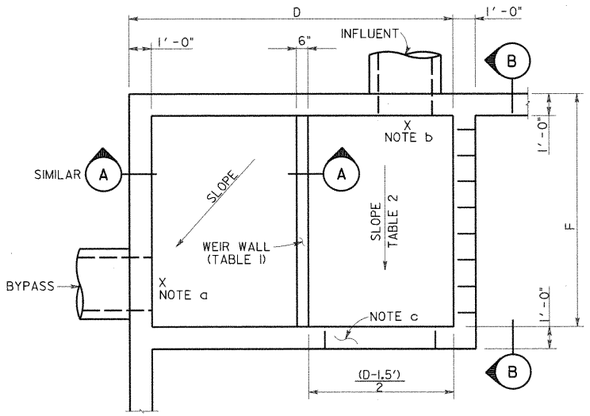

SEE TABLE SHEET I OF II
FOR DIMENSIONS D & F

SPLITTER BOX PLAN (POND 2D2)

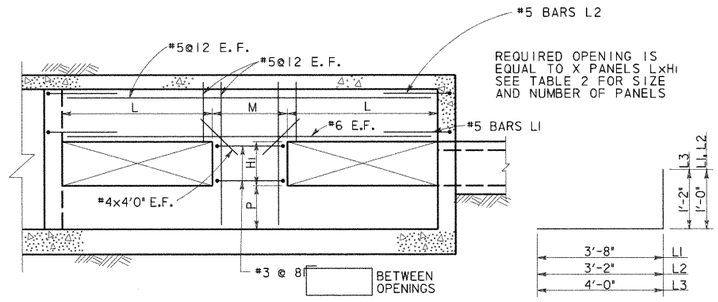

SECTION B

BARS L

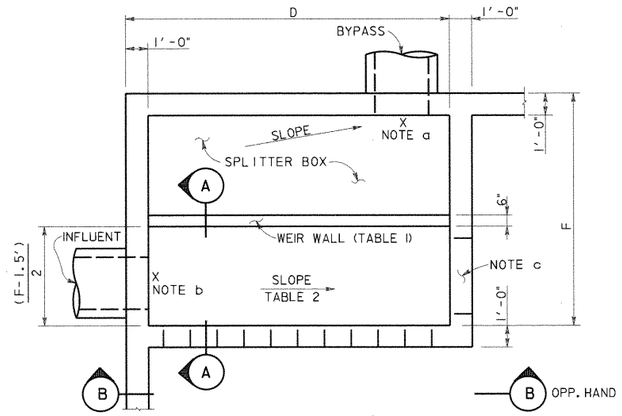

SEE TABLE SHEET I OF II
FOR DIMENSIONS D & F

SPLITTER BOX PLAN (TYPICAL)

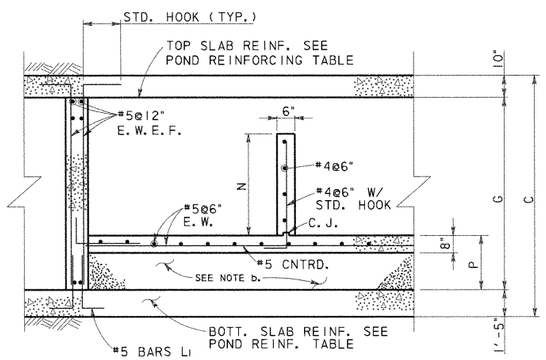

SECTION A

TABLE I BYPASS OUTFALL				
POND	BYPASS LINE ELEVATION	BYPASS WEIR		
		TOP OF WALL ELEV.	N*	P
1A	914.23	917.78	3'-6"	1'-6"
1B	918.44	921.00	2'-6"	2'-6"
1C	918.39	922.75	4'-3"	1'-9"
2A	917.38	920.92	3'-6"	1'-6"
2B	921.92	923.49	1'-6"	3'-6"
2C	923.82	925.90	2'-0"	4'-6"
2D1	920.53	923.63	3'-0"	2'-6"
2D2	916.71	921.85	5'-0"	1'-0"

*N IS MINIMUM DIMENSION, SPLITTER BOX FLOOR SLOPES, HOLD TOP OF WEIR WALL CONSTANT.

TABLE 2 INFLUENT LINE						
POND	INFLUENT ELEV.	SLOPE %	INFLUENT WALL			
			OPENINGS X	M	L	HI
1A	914.28	0.29	4	3'-0"	3'-0"	2'-6"
1B	918.50	0.48	3	2'-9"	3'-0"	1'-6"
1C	918.50	0.85	3	2'-9"	3'-0"	1'-6"
2A	917.42	0.33	3	2'-9"	3'-0"	1'-6"
2B	921.99	0.54	1	0	14'-8"	0'-9"
2C	923.90	0.62	3	2'-9"	3'-0"	1'-0"
2D1	920.63	0.53	3	6'-0"	3'-0"	2'-0"
2D2	916.85	0.78	4	3'-8"	2'-6"	2'-0"

NOTES:

a. SEE TABLE I THIS SHEET FOR OUT FLOW ELEVATION. SLOPE SLAB FROM OVERFLOW WEIR TO OUTFALL.

b. SEE TABLE 2 FOR INFLUENT ELEVATION. TOP OF SPLITTER BOX SLAB TO MATCH INFLOW ELEVATION. AT POND 2D1 THE ELEVATION SHOWN REPRESENTS A 6" DROP FROM THE INFLUENT FLOWLINE. CONTRACTOR MAY USE CEMENT STABILIZED SAND UNDER THE SLAB OR PLACE CONCRETE FOR THE FILL.

c. PROVIDE 3'x .75' OPENING AT BOTTOM OF SPLITTER BOX WALL AT END OF CHANNEL.

STATE OF TEXAS
WILLY R. BURNS
54103
REGISTERED
PROFESSIONAL ENGINEER
4/28/99

NO.	DATE	REVISION	APPROVED

Turner Collie & Braden Inc.
Engineers • Planners • Project Managers

SUTTON — Job No. 62-14004-011

© 1998 Texas Department of Transportation

US 183
WATER QUALITY PONDS
STRUCTURAL DETAILS

SCALE: AS NOTED — SHEET 3 OF 11

Designed	WRB	FED. RD. DIV. NO.	STATE	FEDERAL AID PROJECT NO.				HIGHWAY NO.
Checked		6	TEXAS	NH99(556)				US 183
Drawn	MR	STATE DIST. NO.	COUNTY	CONTROL NO.	SECTION NO.	JOB NO.		SHEET NO.
Checked		14	WILLIAMSON	151	5	072		261c

UGPDT3.DGN

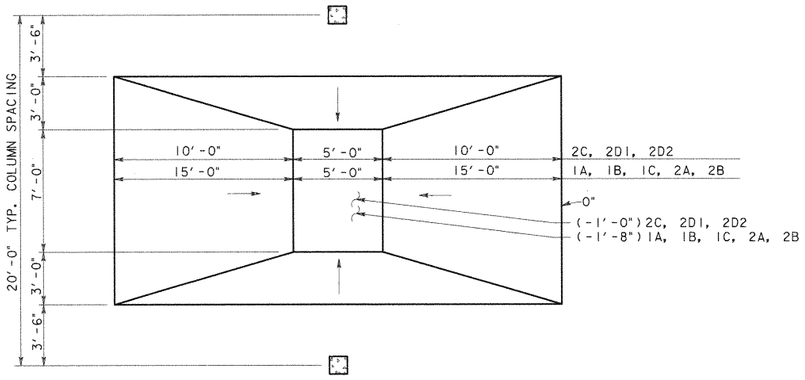

PLAN

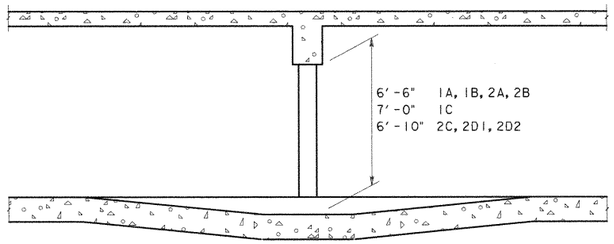

SECTION

REINFORCING LAP SPLICE & EMBEDMENT SCHEDULE						
BAR SIZE	MIN LAP LENGTH		MIN EMBEDMENT LENGTH			
	TOP BARS	OTHER BARS	TOP BARS		OTHER BARS	
			STR.	STD. HOOK	STR.	STD. HOOK
4	24"	20"	17"	9"	12"	7"
5	30"	24"	21"	10"	15"	8"
6	36"	28"	25"	10"	18"	8"
8	58"	41"	42"	15"	30"	12"

PROVIDE ONE CROSS OVER DETAIL FOR E ≤ 80'
PROVIDE TWO CROSS OVER DETAILS FOR E > 80'

CROSS OVER DETAIL
SCALE: 1/4" = 1'-0"

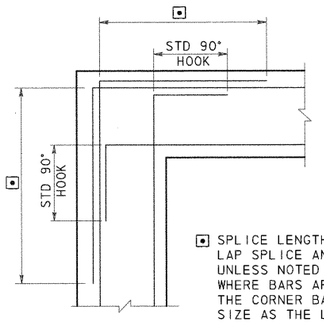

⊡ SPLICE LENGTH SEE REINFORCING LAP SPLICE AND EMBEDMENT TABLES. UNLESS NOTED OTHERWISE ON DWGS WHERE BARS ARE DIFFERENT SIZE THE CORNER BAR SHALL BE SAME SIZE AS THE LARGER BAR

CORNER REINFORCING
FOR WALLS OR GRADE BEAMS

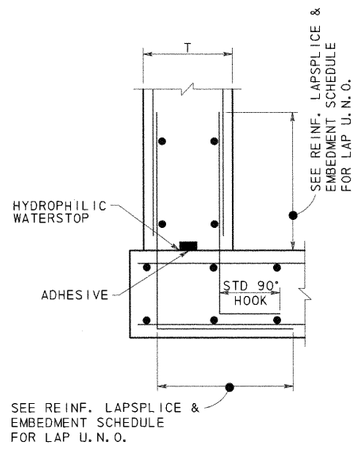

CONSTRUCTION JOINT
BASE OF WALLS

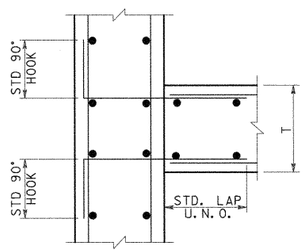

CONSTRUCTION JOINT
WALL INTERSECTIONS

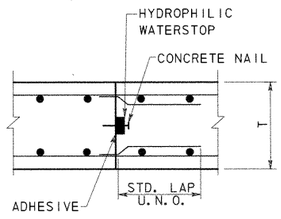

CONSTRUCTION JOINT
SLABS

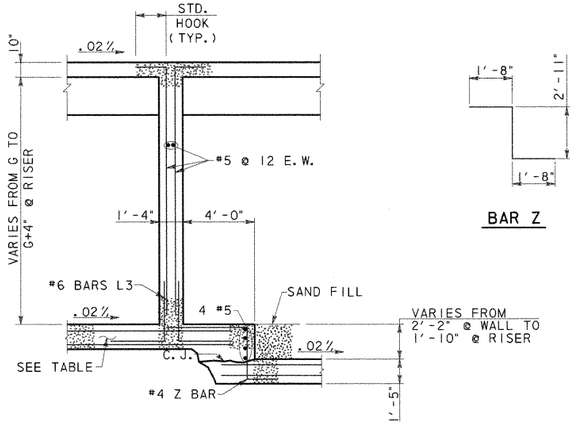

SECTION B

BAR Z

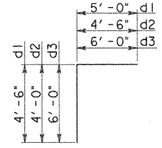

BARS D

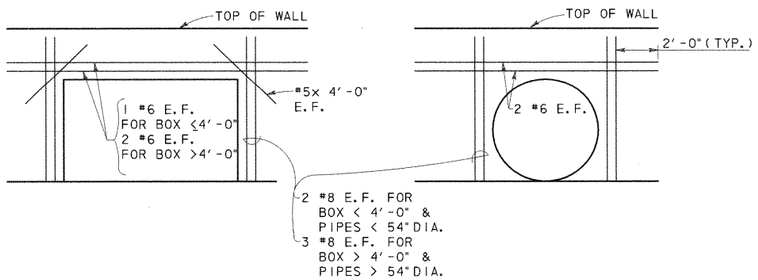

ADDITIONAL REINFORCING @ OPENINGS



NO.	DATE	REVISION	APPROVED

Turner Collie & Braden Inc.
Engineers • Planners • Project Managers

DATE: SUTTON | JOB NO. 62-14004-011 | APPROVED

© 1998 Texas Department of Transportation

US 183
WATER QUALITY PONDS
STRUCTURAL DETAILS

SCALE: AS NOTED | SHEET 4 OF 11

DESIGNED	CHECKED	DRAWN	CHECKED	FED. RD. DIV. NO.	STATE DIST. NO.	STATE	COUNTY	FEDERAL AID PROJECT NO. CONTROL NO.	SECTION NO.	JOB NO.	SHEET NO.	HIGHWAY NO.
WRB		MR		6	14	TEXAS	WILLIAMSON	NH99(556) 151	5	072	261d	US 183

UGPDT4.DGN

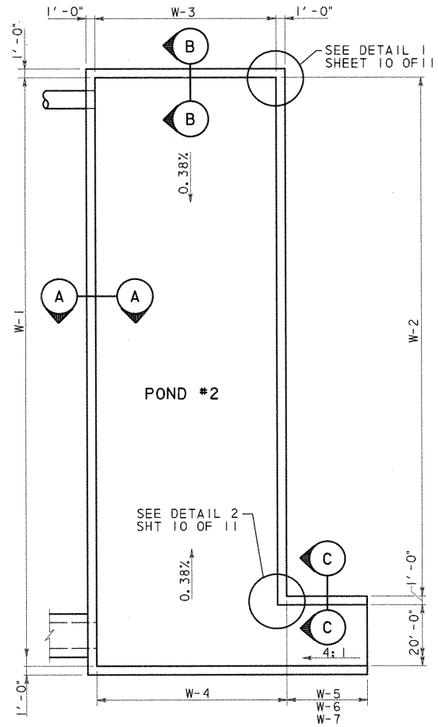

OPEN POND PLAN

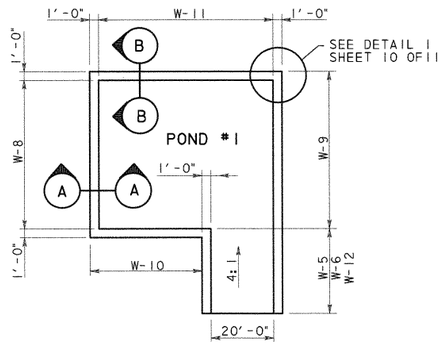

NOTE:

SEE POND LAYOUT SHEETS FOR REQ'D. RIPRAP, GABIONS, INCOMING & OUTGOING LINES ETC.

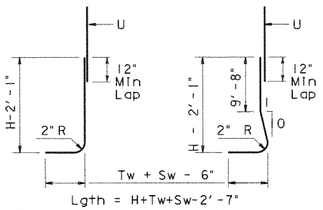

BARS A1

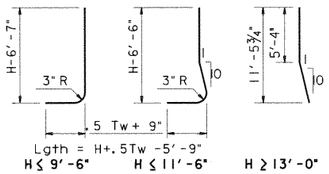

BARS A2

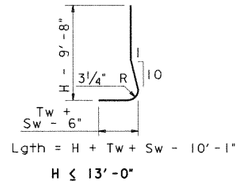

BARS A3

Wall Height "H" (ft)	PROPERTIES WALL DIMENSIONS(IN) Tw	Sw	Hw	Ft	Kw	Max Soil Press klp/ft²	REINFORCING STEEL FOR ONE 32(FT) PANEL A1 ~ 26 #5 @ 15" c-c Lgth	lb	A2 ~ 25 #6 @ 15" c-c Lgth	lb	A3 ~ 25 #7 @ 15" c-c Lgth	lb	B ~ 26 #5 @ 15" c-c Lgth	lb	C Size	No.	Spa	Lgth	lb	D (#5) @ 12" c-c No.	lb	Dowel F @ 12" c-c No.	lb	H (#5) @ 12" c-c No.	lb	T (#5) @ 12" c-c No.	lb	U ~ 26 #5 @ 15" c-c Lgth	lb
7'-0"	18	12	24	12	9	1.21	78	176					72	163	5	26	16	39	88	14	474	9	70	4	135	3	101	104	236
9'-6"	27	12	45	12	9	1.78	123	278	61	192			111	251	8	39	10	58	454	20	677	12	95	5	170	4	135	104	236
11'-6"	29	12	51	12	9	2.05	147	333	83	258	56	240	131	295	8	39	10	62	505	24	814	14	110	6	203	4	135	104	236
13'-0"	38	13	53	12	9	2.30	172	390	105	326	82	343	151	342	8	39	10	74	576	26	880	15	119	6	203	4	134	104	236

Wall	PROPERTIES WALL DIMENSIONS(IN) Tw	Sw	Hw	Ft	Kw	Max Soil Press klp/ft²	REINFORCING STEEL FOR PANELS W-5, W-6 & W-7 (AVG. L = 14.5') A1 ~ 26 #5 @ 15" c-c *Lgth	lb	A2 ~ 25 #6 @ 15" c-c *Lgth	lb	A3 ~ 25 #7 @ 15" c-c *Lgth	lb	B ~ 26 #5 @ 15" c-c Lgth	lb	C Size	No.	Spa	Lgth	lb	D (#5) @ 12" c-c No.	lb	Dowel F @ 12" c-c No.	lb	H (#5) @ 12" c-c No.	lb	T (#5) @ 12" c-c No.	lb	U ~ 26 #5 @ 15" c-c Lgth	lb
W-5	16	12	20	12	0	.88	56	60					52	56	5	12	15	32	64	10	154	9	71	4	61	3	46	104	104
W-6	20	12	31	12	9	1.53	100	104	40	55			92	96	6	12	15	47	141	16	246	12	95	5	77	3	61	104	104
W-7	27	12	39	12	9	1.76	146	154	82	114	56	48	130	120	8	18	10	58	116	24	369	15	119	6	92	4	61	104	104

*AVERAGE LENGTH, ADJUST FOR SLOPE

OPEN POND DIMENSION TABLE

WALL No.	LENGTH	HEIGHT
W-1	262'-0"	11'-0" TO 13'-0"
W-2	242'-0"	11'-0" TO 13'-0"
W-3	73'-0"	11'-0"
W-4	73'-0"	13'-0"
W-5	14'-6"	6'-6" TO 3'-0"
W-6	14'-6"	9'-6" TO 6'-6"
W-7	15'-0"	13'-0" TO 9'-6"
W-8	60'-0"	13'-0"
W-9	60'-0"	13'-0"
W-10	50'-0"	13'-0"
W-11	70'-0"	13'-0"
W-12	14'-0"	6'-6" TO 3'-0"

TOTALS

POND No.	CONCRETE (YD³)*	REINFORCING (LB)*	SQ.** FT.
POND #1	207	29830	3115
POND #2	489	70836	6696

*QUANTITIES FOR CONTRACTOR'S INFORMATION ONLY.

**EXPOSED S.F.

GENERAL NOTES:

1. DESIGNED ACCORDING TO CURRENT AASHTO 1996 STANDARD SPECIFICATIONS.
2. DESIGNED FOR EQUIVALENT SOIL PRESSURE OF 60 PCF.
3. ALL REINFORCING SHALL BE GRADE 60 KSI.
4. ALL CONCRETE SHALL BE CLASS "C".
5. REINFORCING BARS SHALL BE ADJUSTED TO PROVIDE A MINIMUM OF 1½" CLEAR COVER.
6. ALL DIMENSIONS ARE IN FEET AND INCHES AND ALL MASS IS IN POUNDS UNLESS OTHERWISE NOTED.
7. CONSTRUCTION JOINT SHALL BE AT 32 FT. MAX. OC. PROVIDE CONSTRUCTION AT 15' MAX FROM EACH CORNER. CORNER CLOSURES SHALL BE PLACED LAST.
8. PROVIDE AN EXPANSION JOINT AFTER MAXIMUM OF 3 PANELS.
9. SEE SHEET 11 OF 11 FOR EXPANSION JOINT, CONSTRUCTION JOINT DETAILS AND ADDITIONAL NOTES.
10. SEE SHEET 10 OF 11 FOR ADDITIONAL REINFORCEMENT AROUND OPENINGS.

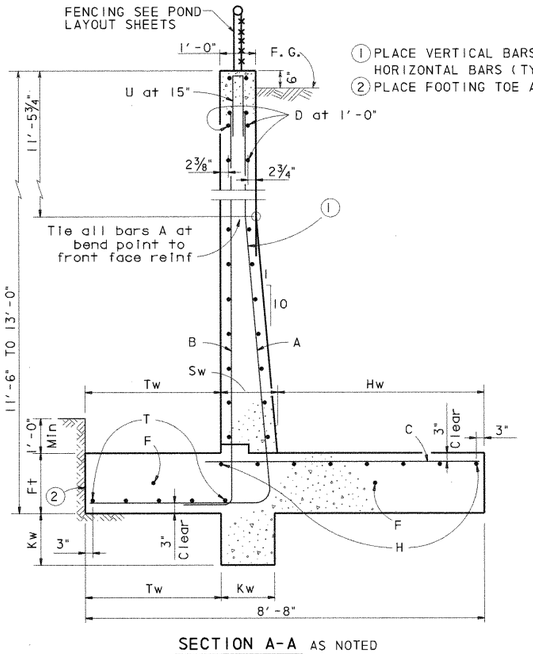

SECTION A-A AS NOTED

① PLACE VERTICAL BARS INSIDE OF HORIZONTAL BARS (TYP. BOTH FACES)
② PLACE FOOTING TOE AGAINST UNDISTURBED SOIL.

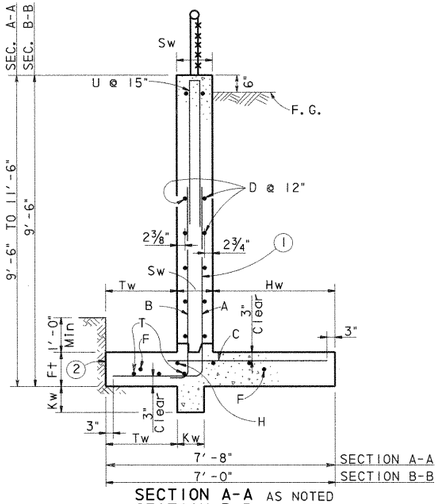

SECTION A-A AS NOTED
SECTION B-B AS NOTED
SCALE: ½" = 1'-0"

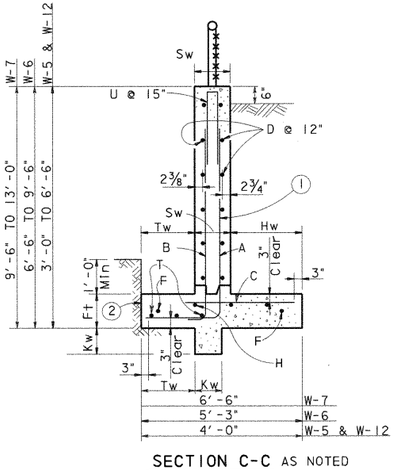

SECTION C-C AS NOTED
SCALE: ½" = 1'-0"

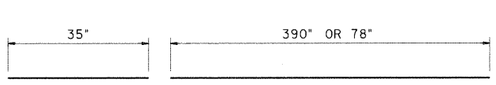

BARS F

BARS D, H, T

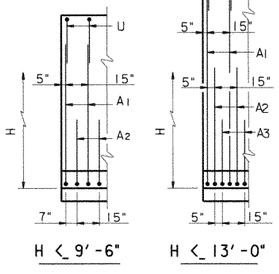

H ≤ 9'-6"

H ≤ 13'-0"

PARTIAL WALL ELEVATION
SHOWING VERTICAL REINFORCING PATTERN IN BACK FACE

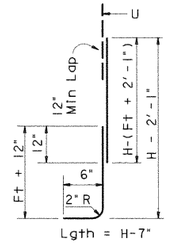

Lgth = H-7"

BARS B

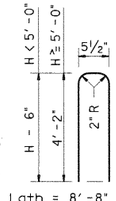

Lgth = 8'-8" for H ≥ 5'-0"

Lgth = 2H - 6½" for H < 5'-0"

BARS U

STATE OF TEXAS
WILLIAM R. BURRIS
44163
REGISTERED PROFESSIONAL ENGINEER
4/28/99

NO.	DATE	REVISION	APPROVED

Turner Collie & Braden Inc.
Engineers • Planners • Project Managers

DIST. SUTTON | JOB No. 62-14004-011 | Approved

© 1998 Texas Department of Transportation

US 183
620 MEDIAN
WATER QUALITY PONDS
STRUCTURAL DETAILS

SCALE: AS NOTED | SHEET 5 OF 11

Designed	WRB	FED. RD. DIV. NO. 6	STATE TEXAS	FEDERAL AID PROJECT NO. NH99(556)	HIGHWAY NO. US 183
Checked					
Drawn	MR	STATE DIST. NO. 14	COUNTY WILLIAMSON	CONTROL NO. 151	SECTION NO. 5	JOB NO. 072	SHEET NO. 261e
Checked					

UGPDT5.DGN

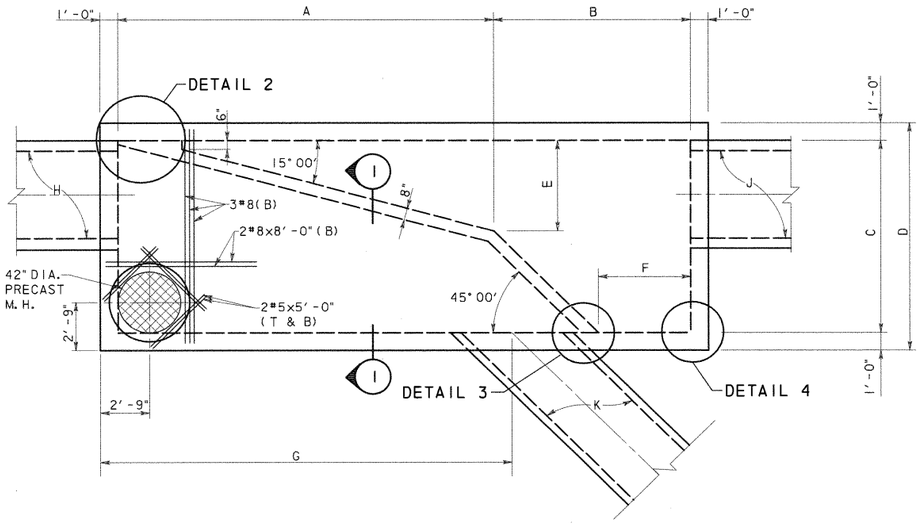

SPLITTER BOX DIMENSION TABLE

BOX LOCATION	A	B	C	D	E	F	G	H	J	K
POND SPRINGS	21'-0"	11'-0"	11'-0"	13'-0"	5'-2"	5'-2"	22'-0"	6x5 RCB	6x5 RCB	4x4 RCB
620 LEFT SIDE	13'-9"	8'-9"	8'-0"	10'-0"	3'-2"	4'-1"	13'-7"	*48" RCP	4x4 RCB	48" RCP

*48" RCP @ 15° SKEW
SEE DRAINAGE DETAIL SHEET.

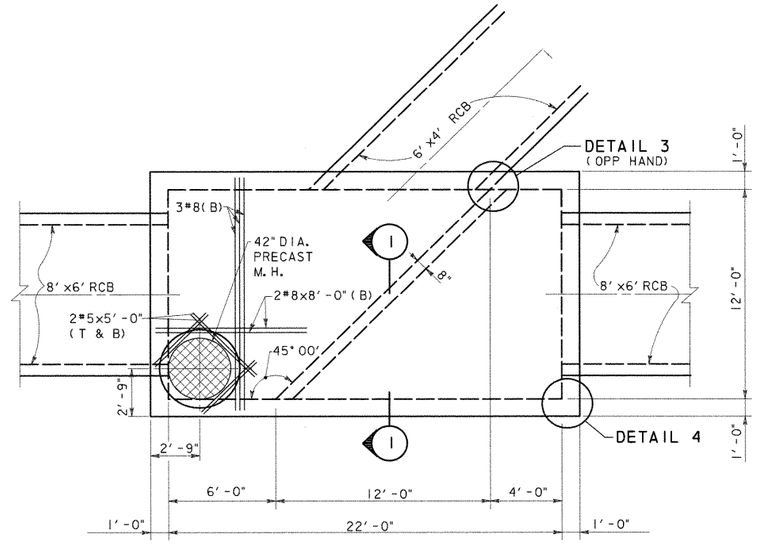

620 RIGHT SIDE
PLAN VIEW
SCALE: 1/4" = 1'-0"

ESTIMATED QUANTITIES			
BOX	CONCRETE (YD^3) *	REINFORCING (LBS) *	STRUCTURAL EXCAVATION (YD)
POND SPRINGS	56.8	7,964	
620 LEFT	32.5	4,096	
620 RIGHT	48.8	5,877	

* QUANTITIES FOR CONTRACTOR'S ESTIMATE ONLY. ALL ITEMS ARE SUBSIDIARY TO THE SPLITTER BOX.

PLAN VIEW
SCALE: 1/4" = 1'-0"

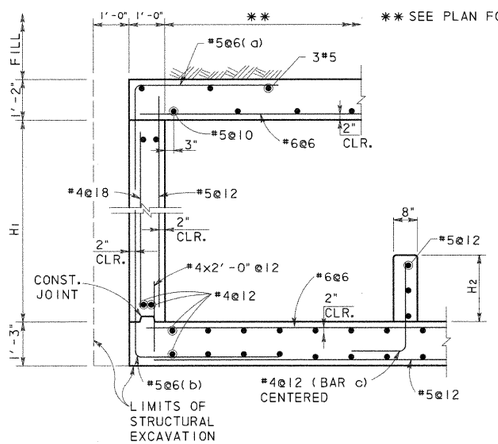

SECTION 1
SCALE: 1/2" = 1'-0"

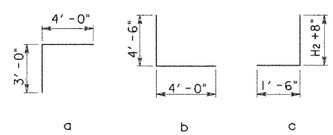

BOX LOCATION	H1	H2
POND SPRINGS	5'-6"	3'-0 1/2"
620 LEFT SIDE	4'-6"	2'-6"
620 RIGHT SIDE	6'-8"	1'-3"

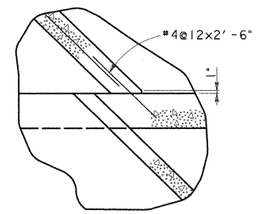

DETAIL 3
SCALE: 1/2" = 1'-0"

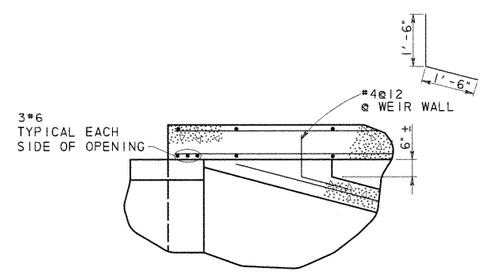

DETAIL 2
SCALE: 1/2" = 1'-0"

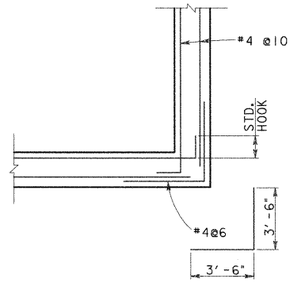

DETAIL 4
SCALE: 1/2" = 1'-0"

GENERAL NOTES:

1. DESIGNED ACCORDING TO CURRENT AASHTO 1996 STANDARD SPECIFICATIONS.
2. DESIGNED FOR HS20 LOADING AND TO THE MAXIMUM FILL HEIGHT SHOWN.
3. ALL REINFORCING SHALL BE GRADE 60 KSI.
4. ALL CONCRETE SHALL BE CLASS "C".
5. ALL DIMENSIONS ARE IN FEET AND INCHES AND ALL MASS IS IN POUNDS UNLESS OTHERWISE NOTED.



NO.	DATE	REVISION	APPROVED

Turner Collie & Braden Inc.
Engineers • Planners • Project Managers

DATE: SUTTON | JOB NO. 62-14004-011 | APPROVED

© 1998 Texas Department of Transportation

US 183
WATER QUALITY PONDS
STRUCTURAL DETAILS

SCALE: AS NOTED | SHEET 6 OF 11

Designed	WRB	FED. RD. DIV. NO.	STATE	FEDERAL AID PROJECT NO.				HIGHWAY NO.
Checked		6	TEXAS	NH99(556)				US 183
Drawn	MR	STATE DIST. NO.	COUNTY	CONTROL NO.	SECTION NO.	JOB NO.		SHEET NO.
Checked		14	WILLIAMSON	151	5	072		261f

UGPDT6.DGN

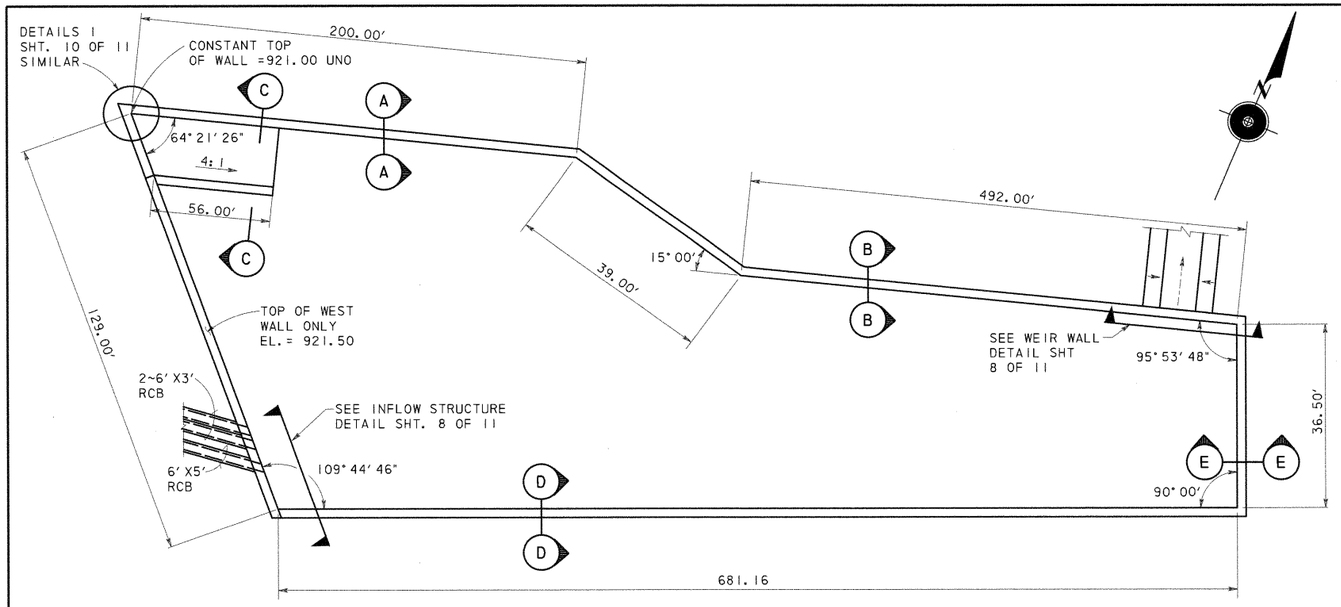

SYSTEM 3 DETENTION POND PLAN

ESTIMATED QUANTITIES (SECTION A)		
CONCRETE (YD^3) *	REINFORCING (LBS) *	** SQ. FT.
2,626	771,900	24,431

* QUANTITIES FOR CONTRACTOR'S ESTIMATE ONLY.

** EXPOSED FACE

*** WALL REINFORCING FOR 32' PANEL (SECT. A)									
A1 ~ 26 #5 @ 15" c-c		A2 ~ 25 #6 @ 15" c-c		A3 ~ 25 #7 @ 15" c-c		A4 ~ 26 #9 @ 15" c-c		A5 ~ 25 #9 @ 15" c-c	
Lgth	lb	Lgth	lb	Lgth	lb	Lgth	lb	Lgth	lb
129	292	145	455	218	928	188	1384	118	837

*** ONE SIDE SHOWN, BARS A BOTH SIDES

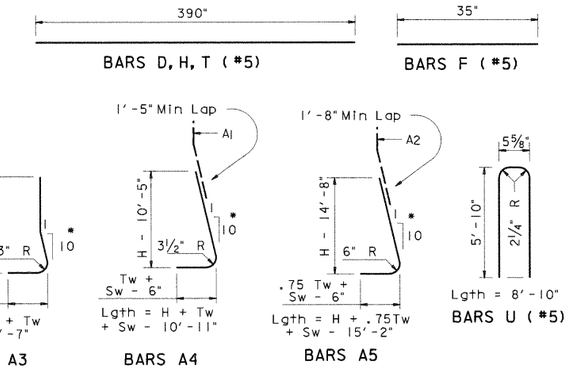

* A BARS ARE STRAIGHT IN FRONT FACE.

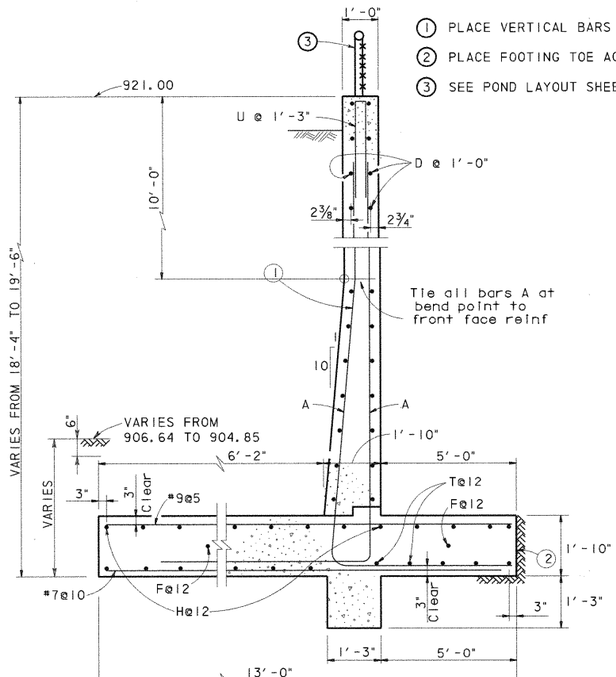

SECTION A-A
SCALE: ½" = 1'-0"

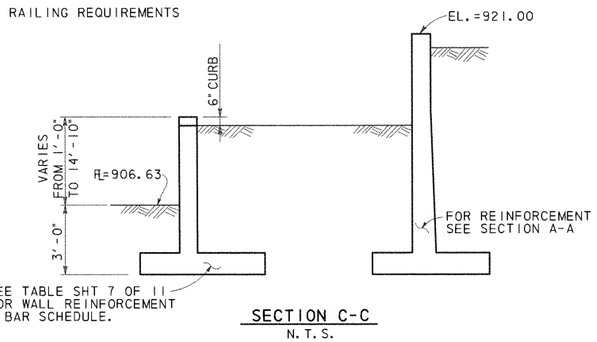

SECTION C-C
N.T.S.

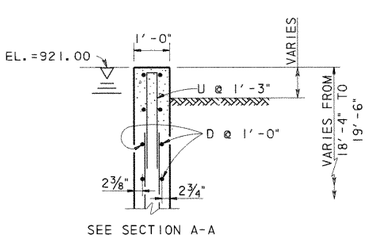

SEE SECTION A-A FOR REST OF DETAIL

SECTION D-D
SCALE: ½" = 1'-0"

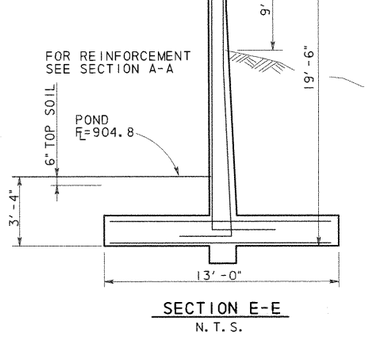

SECTION E-E
N.T.S.

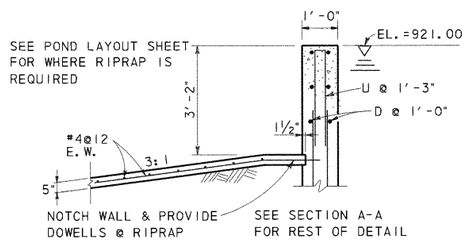

SECTION B-B
SCALE: ½" = 1'-0"

ELEVATION

GENERAL NOTES:

1. DESIGNED ACCORDING TO CURRENT AASHTO 1996 STANDARD SPECIFICATIONS.
2. DESIGNED FOR HS20 LOADING AND EQUIVALENT SOIL PRESSURE OF 60 PCF.
3. ALL REINFORCING SHALL BE GRADE 60 KSI.
4. ALL CONCRETE SHALL BE CLASS "A".
5. REINFORCING BARS SHALL BE ADJUSTED TO PROVIDE A MINIMUM OF 1½" CLEAR COVER.
6. ALL DIMENSIONS ARE IN FEET AND INCHES AND ALL MASS IS IN POUNDS UNLESS OTHERWISE NOTED.
7. CONSTRUCTION JOINT SHALL BE AT 32 FT. MAX. OC. PROVIDE CONSTRUCTION AT 15' MAX FROM EACH CORNER. CORNER CLOSURES SHALL BE PLACED LAST.
8. PROVIDE AN EXPANSION JOINT AFTER MAXIMUM OF 3 PANELS.
9. SEE SHEET 11 OF 11 FOR CONSTRUCTION AND EXPANSION JOINT DETAILS.

STATE OF TEXAS
WALLY R. BURNS
44162
REGISTERED PROFESSIONAL ENGINEER
4/28/99

NO.	DATE	REVISION	APPROVED

Turner Collie & Braden Inc.
Engineers • Planners • Project Managers

SUTTON | Job No. 62-14004-011 | Approved

© 1998 Texas Department of Transportation

US 183
WATER QUALITY PONDS
STRUCTURAL DETAILS

SCALE: AS NOTED | SHEET 7 OF 11

Designed	Checked	Drawn	Checked	FED. RD. DIV. NO.	STATE DIST. NO.	STATE	COUNTY	CONTROL NO.	SECTION NO.	JOB NO.	HIGHWAY NO. / SHEET NO.
WRB		MR		6	14	TEXAS	WILLIAMSON	151	5	072	US 183 / 261g

FEDERAL AID PROJECT NO. NH99(556)

UGPDT7.DGN

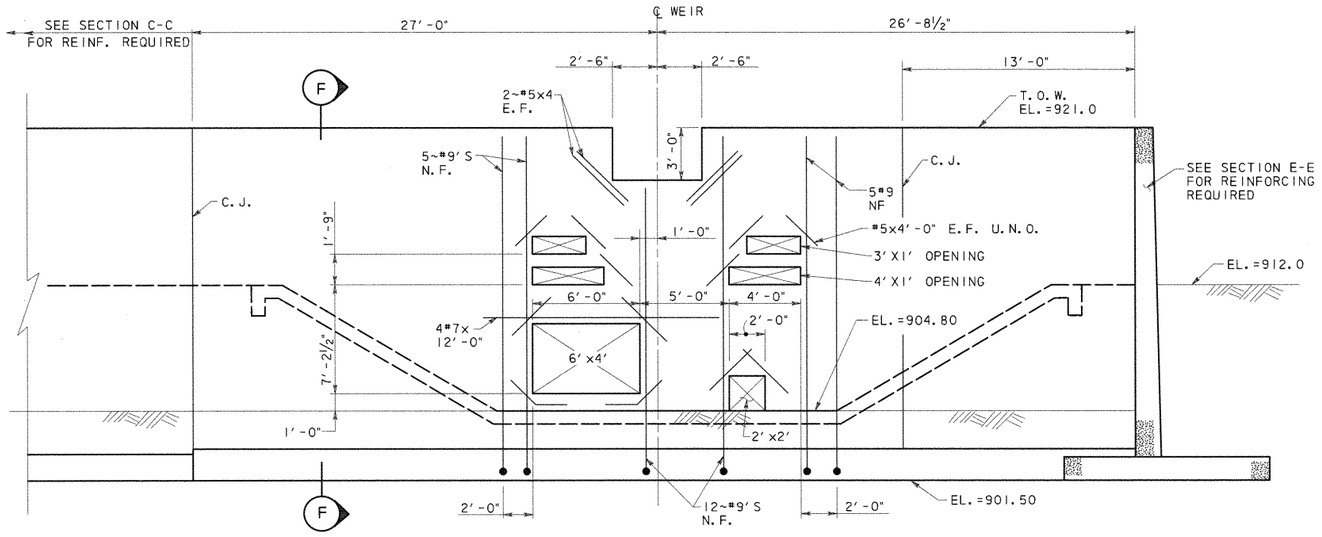

ADDITIONAL REINFORCING SHOWN, SEE SECTION F FOR TYPICAL REINF.

WEIR WALL DETAIL

SCALE: ¼" = 1'-0"

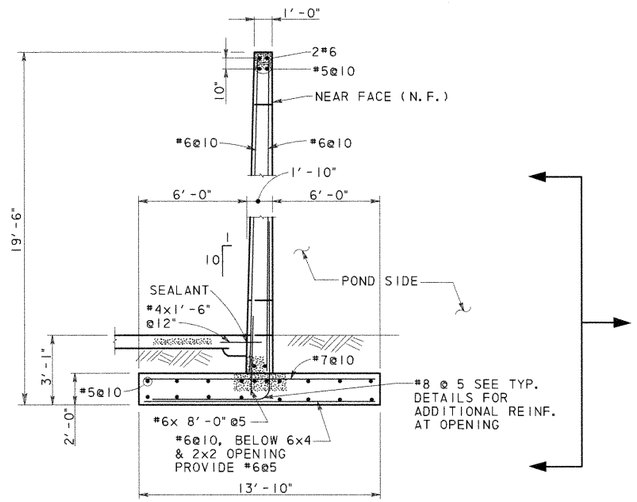

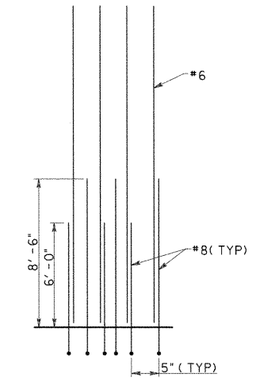

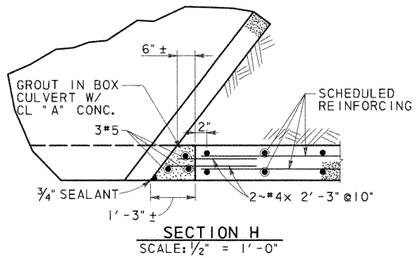

SECTION H

SCALE: ½" = 1'-0"

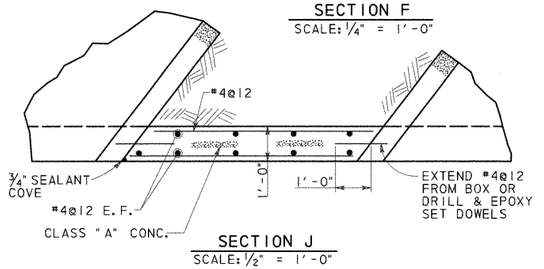

SECTION J

SCALE: ½" = 1'-0"

SECTION F

SCALE: ¼" = 1'-0"

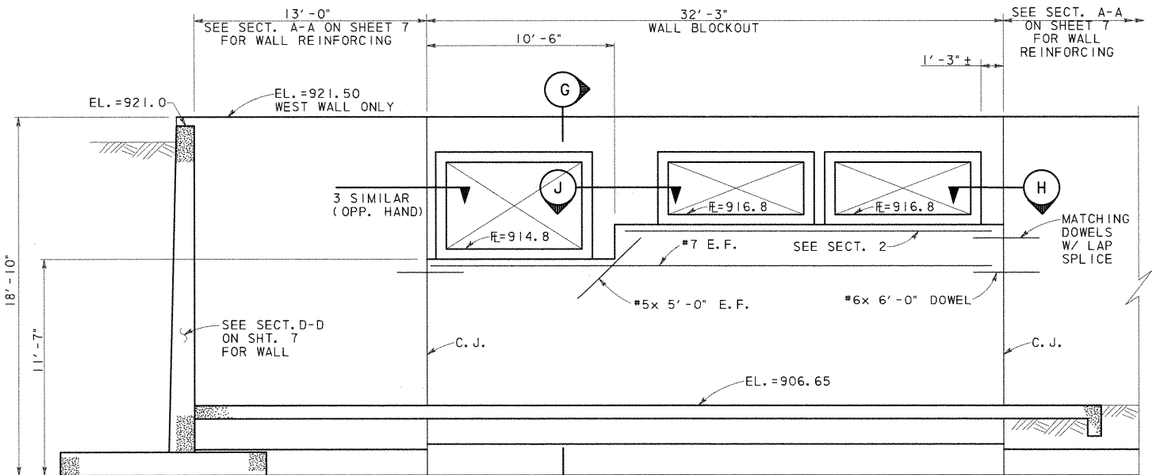

INFLOW STRUCTURE DETAIL

SCALE: ¼" = 1'-0"

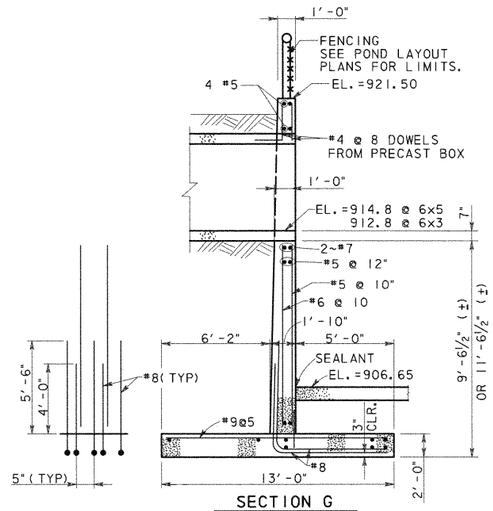

SECTION G

SCALE: ¼" = 1'-0"

STATE OF TEXAS · WALLY R. BURNS · 64262 · REGISTERED PROFESSIONAL ENGINEER

Wally R. Burns 4/28/99

NO.	DATE	REVISION	APPROVED

Turner Collie & Braden Inc.

Engineers • Planners • Project Managers

SUTTON | Job No. 62-14004-011 | Approved

© 1998 Texas Department of Transportation

US 183

WATER QUALITY PONDS STRUCTURAL DETAILS

SCALE: AS NOTED — SHEET 8 OF 11

Designed WRB	Fed. Rd. Div. No. 6	State TEXAS	Federal Aid Project No. NH99(556)	Highway No. US 183
Checked				
Drawn MR	State Dist. No. 14	County WILLIAMSON	Control No. 151	Section No. 5
Checked				Job No. 072

Sheet No. 261h

UGPDT8.DGN

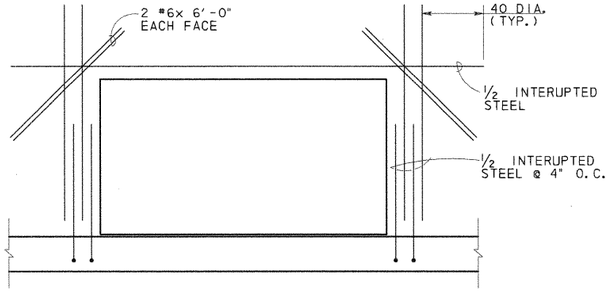

CULVERT OPENINGS

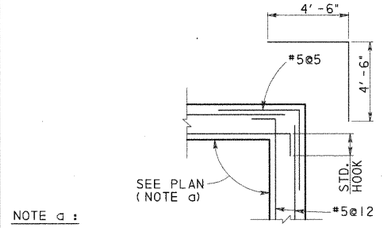

NOTE a :

SEE 620 MEDIAN POND (SHT. 5 OF 11), SYSTEM 3 POND (SHT. 7 OF 11)

DETAIL 1
SCALE: 1/2" = 1'-0"

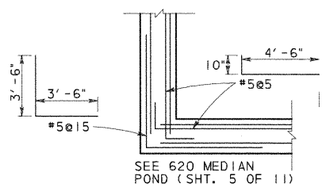

DETAIL 2
SCALE: 1/2" = 1'-0"

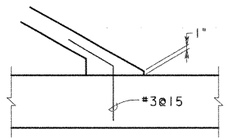

DETAIL 3
SCALE: 3/4" = 1'-0"

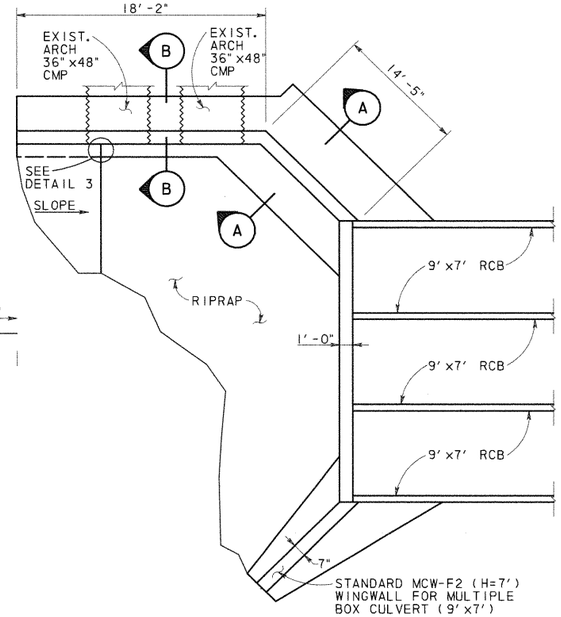

CULVERT @ POND SPRINGS PLAN
N. T. S.

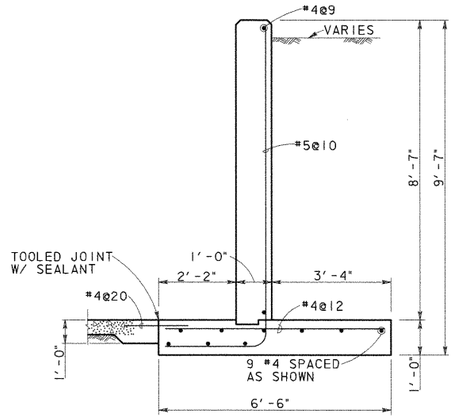

SECTION A-A
SCALE: 1/2" = 1'-0"

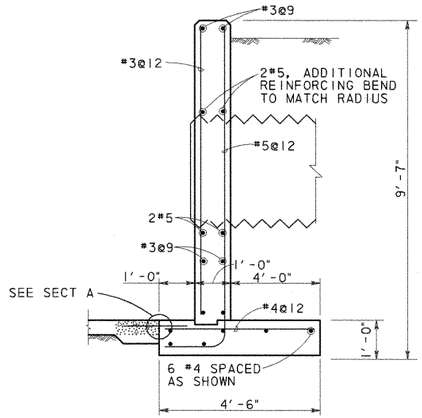

SECTION B-B
SCALE: 1/2" = 1'-0"

POND SPRINGS HEADWALL ESTIMATE QUANTITIES	
CONCRETE (YD^3) *	REINFORCING (LB) *
20.8	672

* QUANTITIES FOR CONTRACTOR'S INFORMATION ONLY. QUANTITIES SHOWN DO NOT INCLUDE THE .5 MCW-F2 WINGWALL OR THE CULVERT CURB.

THE HEADWALL SHALL BE PAID FOR AS MCW-F2(SPL).

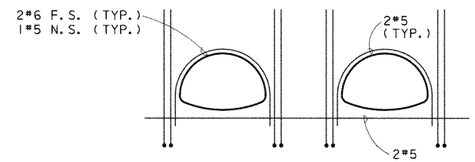

ADDITIONAL REINFORCMENT SHOWN. SEE SECTION B FOR TYPICAL

ELEVATION @ ARCH PIPE
N. T. S.

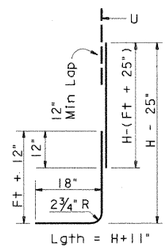

BARS B

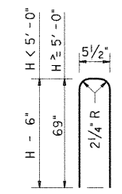

BARS U

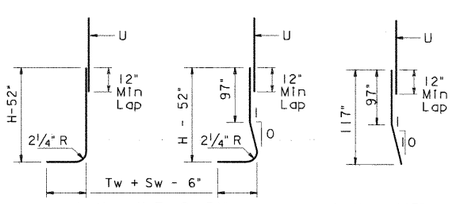

BARS A1

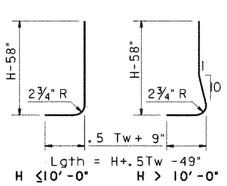

BARS A2

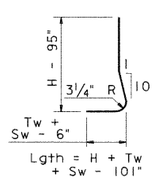

BARS A3

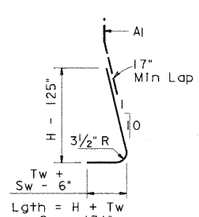

BARS A4

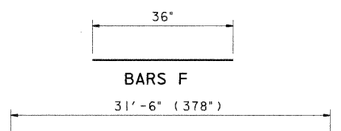

BARS D, H, T

BAR DETAILS POND SPRING

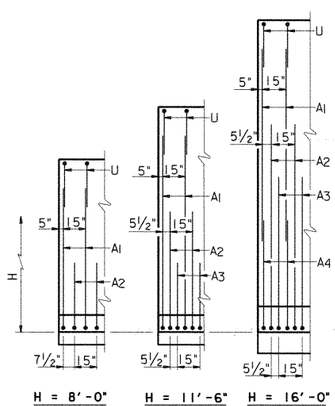

PARTIAL WALL ELEVATIONS
(Showing vertical reinforcing pattern in back face)

STATE OF TEXAS
WILLY R. BURNS
44162
REGISTERED
PROFESSIONAL ENGINEER
6/8/98

NO.	DATE	REVISION	APPROVED

Turner Collie & Braden Inc.
Engineers • Planners • Project Managers

TRANSPORTATION | Job No. 81-07401-024 | Approved

© 1998 Texas Department of Transportation

US 183
MISCELLANEOUS
WATER QUALITY PONDS
STRUCTURAL DETAILS

SCALE: AS NOTED | SHEET 10 OF 11

Designed	WRB	FED. RD. DIV. NO.	STATE	FEDERAL AID PROJECT NO.				HIGHWAY NO.
Checked		6	TEXAS	NH99(556)				US 183
Drawn	MR	STATE DIST. NO.	COUNTY	CONTROL NO.	SECTION NO.	JOB NO.		SHEET NO.
Checked		14	WILLIAMSON	151	5	072		261J

UGPDT10.DGN

AF 41904A

Ultimate Drainage Areas North of R.M. 620 Were Used In Storm Sewer And Water Quality Pond Design

R.M. 620

PECAN PARK

LAKE CREEK PARKWAY

HYMEADOW

Q50 = 447.4 cfs
Outfall 1

Pond 1A

Pond 1B

Pond 1C

Outfall 2
Q100 = 412 cfs
Q50 = 385 cfs

Pond 2A

Pond 2B

Pond 2C

Pond 2D1

Pond 2D2

R.M. 620 Median Pond

Q50 = 800 cfs

Q50 = 89.2 cfs

To Drainage Structures (By Others)

MELLOW MEADOWS DRIVE

LAKESTOP BLVD.

Interim Drainage Areas

US 183

R.M. 620

ANDERSON MILL ROAD

CONTRIBUTING AREA TO LAKE CREEK CHANNEL

A_{TOTAL} = 1133 ACRES
Q_{50} = 4100 cfs *
Q_{100} = 4400 cfs *

* THESE FLOWS ARE BASED ON REGIONAL ANALYSIS OF THE ENTIRE CONTRIBUTING AREA AND DO NOT EQUATE TO THE ACCUMULATED THYSYS FLOWS.

Q50 = 200 cfs

NO.	DATE	REVISION	APPROV.
4			
3			
2			
1			

Turner Collie & Braden Inc.
CONSULTING ENGINEERS
TEXAS AUSTIN/DALLAS/HOUSTON/PORT ARTHUR
COLORADO DENVER

Unit: AUSTIN | Job No. 72-07401-022 | Approved

STATE DEPARTMENT OF HIGHWAYS AND PUBLIC TRANSPORTATION

©1998 TxDOT

DRAINAGE AREA MAP

SCALE: 1" = 200'

Designed DAN	FED. NO. DIV. NO.	STATE	FEDERAL AID PROJECT NO.			HIGHWAY NO.
Checked	6	TEXAS	NH 99(556)			U.S. 183
Drawn WWS	STATE DIST. NO.	COUNTY	CONTROL NO.	SECTION NO.	JOB NO.	SHEET NO.
Checked DAN	14	WILLIAMSON	151	05	072	262a

STATE OF TEXAS
Robert W. Barnett
49537
REGISTERED PROFESSIONAL ENGINEER

Robert W. Barnett
5-09-88

A.F. 61904A

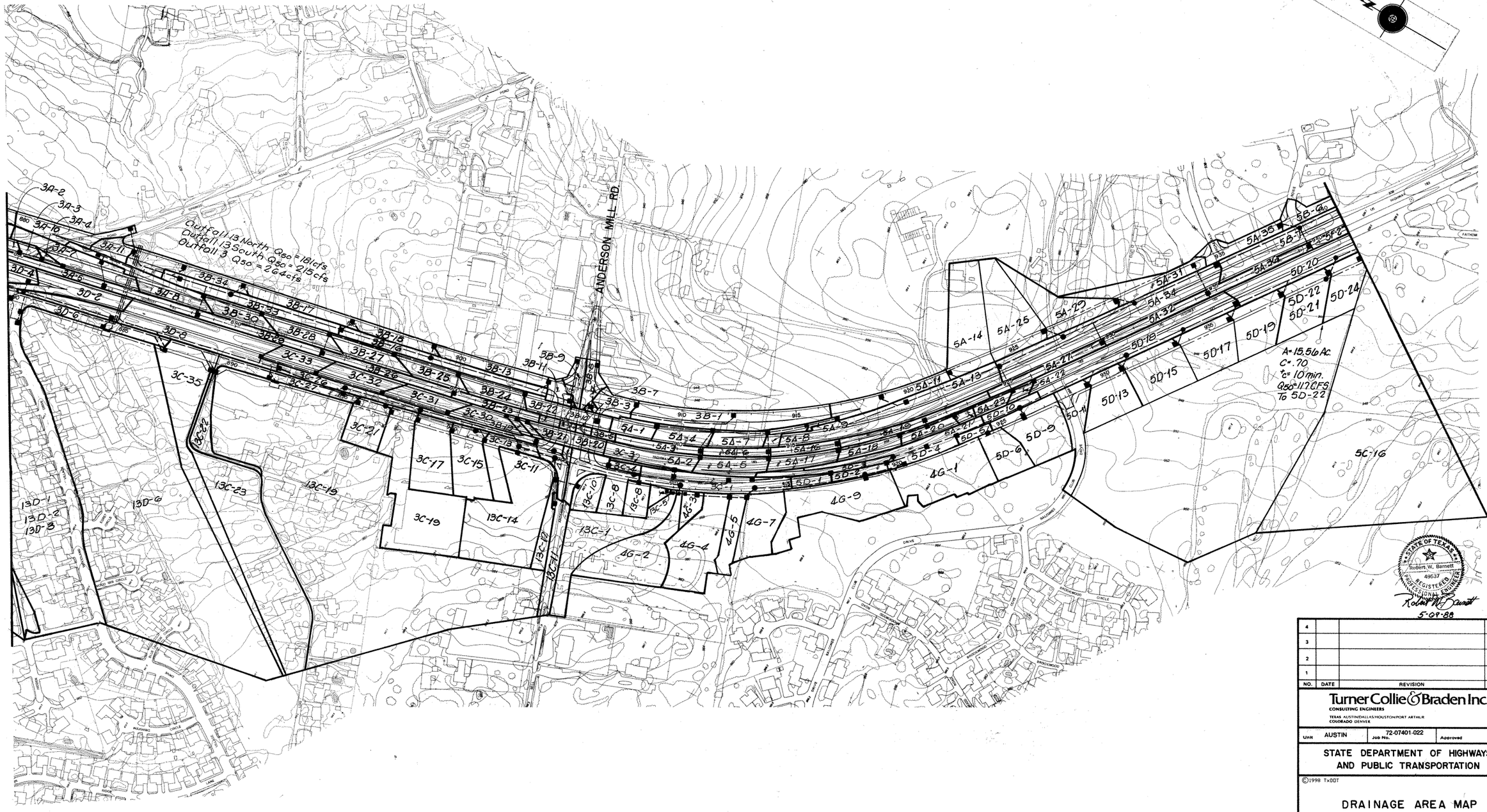

NO.	DATE	REVISION	APPROV.
4			
3			
2			
1			

Turner Collie & Braden Inc.
CONSULTING ENGINEERS
TEXAS AUSTIN/DALLAS/HOUSTON/PORT ARTHUR
COLORADO DENVER

Unit AUSTIN | Job No. 72-07401-022 | Approved

STATE DEPARTMENT OF HIGHWAYS AND PUBLIC TRANSPORTATION

©1998 TxDOT

DRAINAGE AREA MAP

SCALE: 1"=200'

Designed DAN	FED. RD. DIV. NO.	STATE	FEDERAL AID PROJECT NO.			HIGHWAY NO.
Checked	6	TEXAS	NH 99(556)			U.S. 183
Drawn WWS	STATE DIST. NO.	COUNTY	CONTROL NO.	SECTION NO.	JOB NO.	SHEET NO.
Checked DAN	14	WILLIAMSON	151	05	072	202b

A.F. 41804A

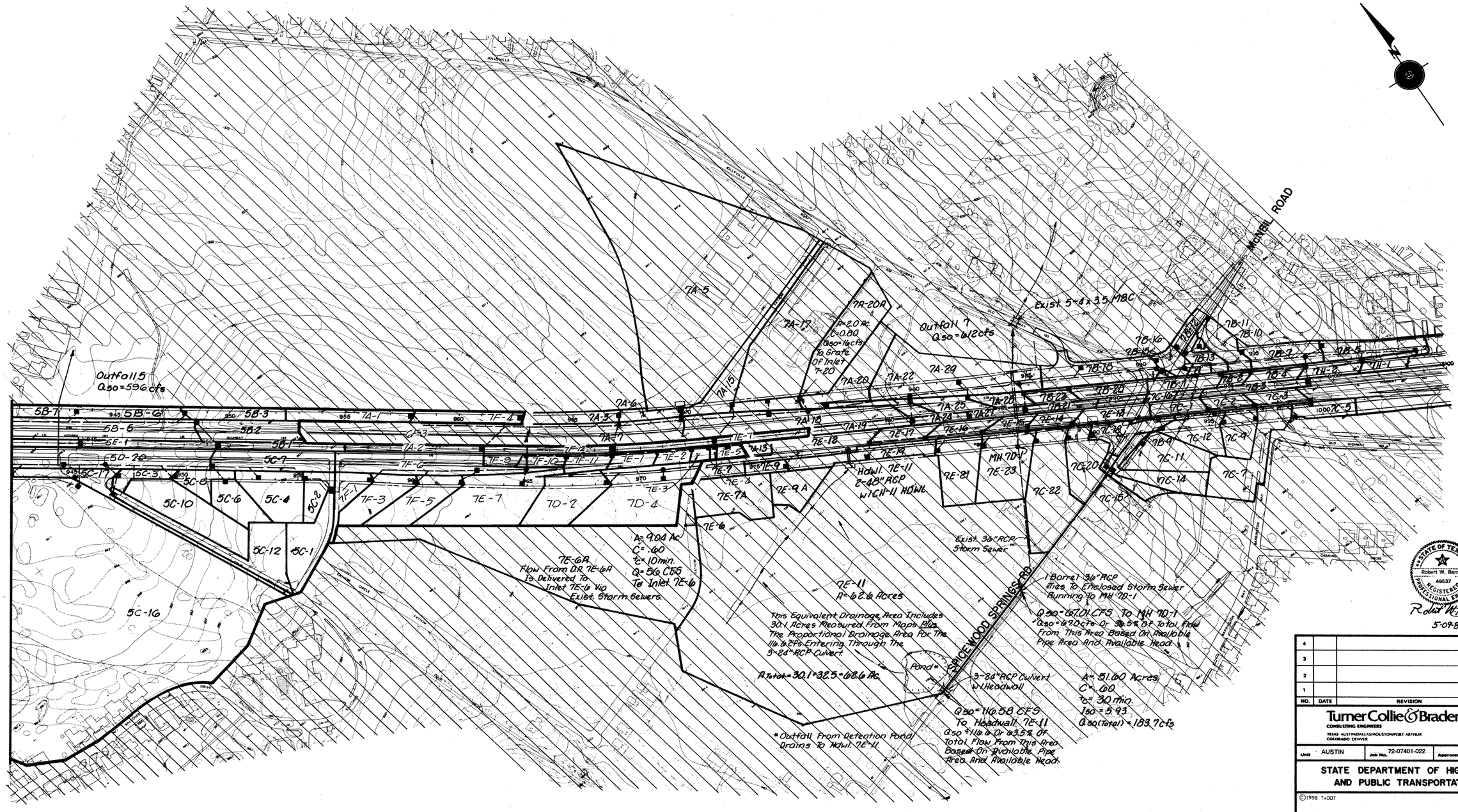
MICHEL ROAD
Outfall 5
Q50=596cfs
Outfall 7
Q50=612cfs
Exist 5-8'x3.5' MBC
7A-5
7A-17
7A-20A
A=2.0 Ac.
C=0.80
Q50=14cfs
To Grate Of Inlet 7-20
7A-15
7A-6
7A-3
7A-7
7A-18
7A-19
7A-20
7A-22
7A-29
7A-25
7A-24
7A-27
7A-26
7A-1
7A-2
7A-13
7F-4
7F-12
7F-11
7F-10
7F-9
7F-8
7F-6
7F-5
7F-3
7F-2
7F-1
7E-1
7E-2
7E-5
7E-7
7E-8
7E-9
7E-9A
7E-9A
7E-6
7E-3
7E-4
7E-7A
7E-10
7E-12
7E-13
7E-14
7E-15
7E-16
7E-17
7E-18
7E-19
7E-11
7E-81
7E-82
7E-23
MH 7D-1
7D-2
7D-4
HDWL 7E-11
2-48" RCP
W/CH-11 HDWL
5B-7
5B-6
5B-5
5B-3
5B-2
5B-1
5E-1
5D-20
5C-17
5C-7
5C-3
5C-8
5C-10
5C-6
5C-4
5C-2
5C-12
5C-1
5C-16
7B-11
7B-10
7B-16
7B-15
7B-13
7B-12
7B-14
7B-18
7B-17
7B-1
7B-2
7B-3
7B-4
7B-5
7B-6
7B-7
7B-8
7B-9
7B-21
7B-22
7B-23
7C-16
7C-1
7C-2
7C-3
1000 7C-5
7C-18
7C-19
7C-20
7C-12
7C-4
7C-11
7C-14
7C-7
7C-82
7C-15
7D-9
7D-11
7D-12
7D-13
7D-14
7D-15
7D-16
7D-17
7D-18
7D-19
7D-20
7D-21
7D-22
7D-23
7D-24
7D-25
7D-26
7D-27
7D-28
7D-29
7D-30
7D-31
7D-32
7D-33
7D-34
7D-35
7D-36
7D-37
7D-38
7D-39
7D-40
7D-41
7D-42
7D-43
7D-44
7D-45
7D-46
7D-47
7D-48
7D-49
7D-50

```
$ 620LT-10.DAT (T: * 183SEC1*THYSYS*SYS1*)
$ U.S. 183 SECT. 1 SYSTEM 1 ANALYSIS FOR NORTHEAST QUADRANT
$ INLETS ENTERING TRUNKLINE TO WQP
$
$ 10 YR FREQUENCY
SEWER               ANALYSIS  RUNOFF    INLET              FREQUENCY= 10YR
COEF DESC A=PVMT    B=COMM    C=COM     D=RES     E=GRASS
$           A    B    C    D    E
RAT COEF   .90  .80  .75  .60  .40      MIN TC =   10.0WILLIAMSON
$
DA A 47   0.14                          L 200V2.0
DA A 48   0.07                          L 100V2.0
DA A 51   0.10                          L 130V2.0
$
JUNC A 46 TYPE=JUNCT
JUNC A 92 TYPE=JUNCT
JUNC P 01 TYPE=JUNCT
JUNC P 02 TYPE=JUNCT
JUNC A 47 TYPE=CSAG  11.0      40.0          .015  .33  3.3 10.0
JUNC A 48 TYPE=GSAG                                     6.0      8.19
JUNC A 49 TYPE=JUNCT
JUNC A 51 TYPE=GSAG                                     6.0      8.19
JUNC P 03 TYPE=JUNCT
JUNC P 04 TYPE=JUNCT
JUNC P 05 TYPE=JUNCT
$
$                      CRITICAL
$                        ELEV
$         ADDITIONAL RUNOFF        GRATE     APPR GRADE  APPR FLOW
$          DA    C    Tc           LENGTH      LT   RT  LT   RT
$          Ac       Min.     Ft.      Ft.         %    %   % OF CFS
$
$
SJUN A 47                923.53             0.44 0.44 90.0 10.0
$
OUTLET STATIONING       0.00 T.W. ELEV  920.75    P 05
DSGN  01  A 46 A 92 US 922.33 DS 922.25   13        83.8 012
DSGN  02  A 92 P 01 US 922.25 DS 922.17 13.6            012          BOX
DSGN  03  P 01 P 02 US 922.17 DS 921.39   99            012
DSGN  04  A 47 A 49 US 922.53 DS 921.14   36            012
DSGN  05  A 48 A 49 US 922.18 DS 921.39   18            012
DSGN  06  A 49 P 02 US 921.39 DS 920.39   23            012
DSGN  07  P 02 P 03 US 921.39 DS 920.75   81            012
DSGN  08  A 51 P 04 US 922.15 DS 918.79   45            012
DSGN  09  P 03 P 04 US 920.75 DS 920.04   17            012
DSGN  10  P 04 P 05 US 920.04 DS 919.50   13            012
$
ANAL  01  A 46 A 92     1    48   48
ANAL  02  A 92 P 01     1     4    4
ANAL  03  P 01 P 02     1    48   48
ANAL  04  A 47 A 49     1    18   18
ANAL  05  A 48 A 49     1    24   24
ANAL  06  A 49 P 02     1    24   24
ANAL  07  P 02 P 03     1    48   48
ANAL  08  A 51 P 04     1    18   18
ANAL  09  P 03 P 04     1    48   48
ANAL  10  P 04 P 05     1    48   48
ENDATA
```

SEWER

RUNOFF CALCULATIONS

RAINFALL FREQUENCY = 10 YR.

SURFACE DESCRIPTION OF RATIONAL COEFFICIENTS

A	B	C	D	E	F
PVMT	COMM	COM	RES	GRASS	
.9000	.8000	.7500	.6000	.4000	.0000

MINIMUM TIME OF CONCENTRATION = 10.0 MINUTES

E = .777 B = 77. D = 8.5

INLET RUNOFF CALCULATIONS

I.D.	AREA	"CA"	"TC"	INTENSITY	BASEFLOW	TOTAL FLOW
A47	.14	.13	1.67	7.98	.00	1.01
A48	.07	.06	.83	7.98	.00	.50
A51	.10	.09	1.08	7.98	.00	.72

SEWER

INLET ANALYSIS

INLET I.D.	TYPE	FLOW (CFS)	INLET CAPACITY (CFS)	CARRYOVER (CFS)	CARRYOVER ASSIGNMENT INLET I.D.	CALCULATED POND WIDTH (FT)	ACTUAL LENGTH (FT)	MINIMUM COMPUTED LENGTH REQUIRED (FT)	ACTUAL AREA (SQ FT)	MINIMUM AREA REQUIRED (SQ FT)	ACTUAL HEAD (FT)
A47	CSAG	1.01	14.53	.00	---	.00	10.0	.7	.00	.00	.10
ANALYSIS OF APPROACHES TO SAG INLET A 47: RIGHT APPROACH - FLOW = .1, PONDING WIDTH = 3.02											
					LEFT APPROACH - FLOW =			.9, PONDING WIDTH = 6.88			
A48	GSAG	.50	16.27	.00	---	.00	.0	.0	8.19	.25	.00
A51	GSAG	.72	16.27	.00	---	.00	.0	.0	8.19	.36	.00

DATE: 04/10/99
JOB No.: 72-07401-022
PATH: t:\ 07401022\drainage\ 183dd189.dgn

STATE OF TEXAS
C.D. BILLS
83877
LICENSED PROFESSIONAL ENGINEER
5-3-99

Turner Collie & Braden Inc.
ENGINEERS • PLANNERS • PROJECT MANAGERS

AUSTIN | 72-07401-022

Texas Department of Transportation

©1998 TxDOT

US 183
620 MEDIAN POND
DRAINAGE DATA
SYSTEM 1 A & P - 10 YR
SCALE: AS NOTED

Designed	KKY	FED. RD. DIV. NO.	STATE	FEDERAL AID PROJECT NO.				HIGHWAY NO.
Checked	DLG	6	TEXAS	NH 99(556)				U.S.183
Drawn	JAM	STATE DIST. NO.	COUNTY		CONTROL NO.	SECTION NO.	JOB NO.	SHEET NO.
Checked	DLG	AUS	WILLIAMSON		0151	05	072	270a

```
$ LT10MOD.DAT (T:J01022\CNGORDER\THYSYS\620LT)
$ U.S. 183 SECT. 1 SYSTEM 1 ANALYSIS FOR NORTHEAST QUADRANT
$ INLETS ENTERING TRUNKLINE TO WQP
$
$*********************************************************************
$ ORIGINAL FILE (620LT-10.DAT) MODIFIED ON 08*\00 TO REFLECT CHANGE
$ ORDER
$
$ MODIFICATIONS TO ANALYZE SYSTEM IN RUNOFF AND INLET MODE ONLY
$*********************************************************************
$
$ 10 YR FREQUENCY
SEWER                    ANALYSIS  RUNOFF    INLET              FREQUENCY= 10YR
COEF DESC A=PVMT    B=COMM    C=COM     D=RES     E=GRASS
$          A    B    C    D    E
RAT COEF   .90  .80  .75  .60  .40     MIN TC =   10.0WILLIAMSON
$
DA A 47   0.14                         L 200V2.0
DA A 48   0.07                         L 100V2.0
DA A 51   0.10                         L 130V2.0
$
JUNC A 46 TYPE=JUNCT
JUNC A 92 TYPE=JUNCT
JUNC P 01 TYPE=JUNCT
JUNC P 02 TYPE=JUNCT
JUNC A 47 TYPE=CSAG  11.0      40.0          .015  .33  3.3 10.0
JUNC A 48 TYPE=GSAG                                 6.0      8.19
SEW0075-- INADEQUATE INFO OF JUNC CARD FOR ANALYSIS OF GUTTER APPROACH TO SAG INLET- PLEASE PROVIDE APPROACH INFO
JUNC A 49 TYPE=JUNCT
JUNC A 51 TYPE=GSAG                                 6.0      8.19
SEW0075-- INADEQUATE INFO OF JUNC CARD FOR ANALYSIS OF GUTTER APPROACH TO SAG INLET- PLEASE PROVIDE APPROACH INFO
JUNC P 03 TYPE=JUNCT
JUNC P 04 TYPE=JUNCT
JUNC P 05 TYPE=JUNCT
$
$                       CRITICAL
$                        ELEV
$          ADDITIONAL RUNOFF        GRATE     APPR GRADE  APPR FLOW
$           DA    C    Tc          LENGTH       LT   RT  LT   RT
$           Ac       Min.     Ft.     Ft.         %    %   % OF CFS
$
$
$
```

SEWER

INLET ANALYSIS

INLET I.D.	TYPE	FLOW (CFS)	INLET CAPACITY (CFS)	CARRYOVER (CFS)	CARRYOVER ASSIGNMENT INLET I.D.	CALCULATED POND WIDTH (FT)	ACTUAL LENGTH (FT)	MINIMUM COMPUTED LENGTH REQUIRED (FT)	ACTUAL AREA (SQ FT)	MINIMUM AREA REQUIRED (SQ FT)	ACTUAL HEAD (FT)
A47	CSAG	1.01	14.53	.00	---	.00	10.0	.7	.00	.00	.10
A48	GSAG	.50	16.27	.00	---	.00	.0	.0	8.19	.25	.00
A51	GSAG	.72	16.27	.00	---	.00	.0	.0	8.19	.36	.00

SEWER

RUNOFF CALCULATIONS

RAINFALL FREQUENCY = 10 YR.

SURFACE DESCRIPTION OF RATIONAL COEFFICIENTS

A	B	C	D	E	F
PVMT	COMM	COM	RES	GRASS	
.9000	.8000	.7500	.6000	.4000	.0000

MINIMUM TIME OF CONCENTRATION = 10.0 MINUTES

E = .777 B = 77. D = 8.5

INLET RUNOFF CALCULATIONS

I.D.	AREA	"CA"	"TC"	INTENSITY	BASEFLOW	TOTAL FLOW
A47	.14	.13	1.67	7.98	.00	1.01
A48	.07	.06	.83	7.98	.00	.50
A51	.10	.09	1.08	7.98	.00	.72

STATE OF TEXAS
MARK E. JONES
81987
REGISTERED
PROFESSIONAL ENGINEER
10-03-00
Δ ONLY

1 CHANGE ORDER
MODIFICATIONS TO ANALYZE SYSTEM IN
RUNOFF AND INLET MODE ONLY

CHANGE ORDER NO. 10

Turner Collie & Braden Inc.
Engineers • Planners • Project Managers

Texas Department of Transportation
© 2000 by TxDOT
TEXAS TURNPIKE AUTHORITY DIVISION

US 183
620 MEDIAN POND
DRAINAGE DATA
SYSTEM 1A & P - 10 YR

DESIGNED:	FED. RD DIV. No.	STATE	FEDERAL AID PROJECT No.			HIGHWAY No.	
CHECKED:	6	TX	NH 99(556)			U.S. 183	
DRAWN:	STATE DISTRICT	COUNTY	CONTROL No.	SECTION No.	JOB No.	SHEET No.	
CHECKED:	AUS	WILLIAMSON	0151	05	072	270aA	

```
$ 620LT-50.DAT (T:*183sec1*THYSYS*SYS1*)
$ U.S. 183 SECT. 1 SYSTEM 1 ANALYSIS FOR NORTHEAST QUADRANT
$ INLETS ENTERING TRUNKLINE TO WQP
$
$ 50 YR FREQUENCY
SEWER                ANALYSIS  RUNOFF              SEWER     FREQUENCY= 50YR
COEF DESC A=PVMT    B=COMM    C=COM     D=RES     E=GRASS
$            A    B    C    D    E
RAT COEF   .90  .80  .75  .60  .40      MIN TC =   10.0WILLIAMSON
$
DA A 47   0.14                          L 200V2.0
DA A 48   0.07                          L 100V2.0
DA A 51   0.10                          L 130V2.0
$
JUNC A 46 TYPE=JUNCT
JUNC A 92 TYPE=JUNCT
JUNC P 01 TYPE=JUNCT
JUNC P 02 TYPE=JUNCT
JUNC A 47 TYPE=CSAG  11.0      40.0          .015  .33  3.3 10.0
JUNC A 48 TYPE=GSAG                                    6.0      8.19
JUNC A 49 TYPE=JUNCT
JUNC A 51 TYPE=GSAG                                    6.0      8.19
JUNC P 03 TYPE=JUNCT
JUNC P 04 TYPE=JUNCT
JUNC P 05 TYPE=JUNCT
$
$                         CRITICAL
$                           ELEV
$         ADDITIONAL RUNOFF          GRATE     APPR GRADE  APPR FLOW
$          DA    C    Tc            LENGTH       LT   RT  LT   RT
$          Ac        Min.     Ft.      Ft.          %    %  % OF CFS
$
$
SJUN A 47                  923.53              0.44 0.44 90.0 10.0
$
OUTLET STATIONING        0.00 T.W. ELEV  920.75    P 05
DSGN  01   A 46 A 92 US 922.33 DS 922.25   13        98.5 012
DSGN  02   A 92 P 01 US 922.25 DS 922.17 13.6             012          BOX
DSGN  03   P 01 P 02 US 922.17 DS 921.39   99            012
DSGN  04   A 47 A 49 US 922.53 DS 921.14   36            012
DSGN  05   A 48 A 49 US 922.18 DS 921.39   18            012
DSGN  06   A 49 P 02 US 921.39 DS 920.39   23            012
DSGN  07   P 02 P 03 US 921.39 DS 920.75   81            012
DSGN  08   A 51 P 04 US 922.15 DS 918.79   45            012
DSGN  09   P 03 P 04 US 920.75 DS 920.04   17            012
DSGN  10   P 04 P 05 US 920.04 DS 919.50   13            012
$
ANAL  01   A 46 A 92      1   48   48
ANAL  02   A 92 P 01      1    4    4
ANAL  03   P 01 P 02      1   48   48
ANAL  04   A 47 A 49      1   18   18
ANAL  05   A 48 A 49      1   24   24
ANAL  06   A 49 P 02      1   24   24
ANAL  07   P 02 P 03      1   48   48
ANAL  08   A 51 P 04      1   18   18
ANAL  09   P 03 P 04      1   48   48
ANAL  10   P 04 P 05      1   48   48
ENDATA
```

SEWER

RUNOFF CALCULATIONS

RAINFALL FREQUENCY = 50 YR.

SURFACE DESCRIPTION OF RATIONAL COEFFICIENTS

A	B	C	D	E	F
PVMT	COMM	COM	RES	GRASS	
.9000	.8000	.7500	.6000	.4000	.0000

MINIMUM TIME OF CONCENTRATION = 10.0 MINUTES

E = .751 B = 92. D = 8.5

INLET RUNOFF CALCULATIONS

I.D.	AREA	"CA"	"TC"	INTENSITY	BASEFLOW	TOTAL FLOW
A47	.14	.13	1.67	10.28	.00	1.30
A48	.07	.06	.83	10.28	.00	.65
A51	.10	.09	1.08	10.28	.00	.93

SEWER

CUMULATIVE RUNOFF CALCULATIONS FOR PIPE RUNS

RUN	U.S. I.D.	D.S. I.D.	"CA"	"TC"	AREA	CUMULATIVE "CA"	CUMULATIVE "TC"	SUPPLY Q	INTENSITY	FLOW
01	A46	A92	.00	.00	.00	.00	10.00	98.50	10.28	98.50
02	A92	P 1	.00	.00	.00	.00	10.00	98.50	10.28	98.50
03	P 1	P 2	.00	.00	.00	.00	10.00	98.50	10.28	98.50
04	A47	A49	.13	1.67	.14	.13	10.00	.00	10.28	1.30
05	A48	A49	.06	.83	.07	.06	10.00	.00	10.28	.65
06	A49	P 2	.00	.00	.00	.19	10.00	.00	10.28	1.94
07	P 2	P 3	.00	.00	.00	.19	10.00	98.50	10.28	100.44
08	A51	P 4	.09	1.08	.10	.09	10.00	.00	10.28	.93
09	P 3	P 4	.00	.00	.00	.19	10.00	98.50	10.28	100.44
10	P 4	P 5	.00	.00	.00	.28	10.00	98.50	10.28	101.37

SEWER

SEWER ANALYSIS

CONFIGURATION DATA

RUN	U.S. ID	D.S. ID	U.S. F.L. ELEV	D.S. F.L. ELEV	LENGTH FEET	SLOPE	BBLS	RISE	SPAN	SHAPE
01	A46	A92	918.33	918.25	13	.00616	1	48	48	CIRC
02	A92	P 1	918.25	918.17	13	.00588	1	4	4	BOX
03	P 1	P 2	918.17	917.39	99	.00788	1	48	48	CIRC
04	A47	A49	921.03	919.64	36	.03861	1	18	18	CIRC
05	A48	A49	920.18	919.39	18	.04389	1	24	24	CIRC
06	A49	P 2	919.39	918.39	23	.04348	1	24	24	CIRC
07	P 2	P 3	917.39	916.75	81	.00790	1	48	48	CIRC
08	A51	P 4	920.65	917.29	45	.07467	1	18	18	CIRC
09	P 3	P 4	916.75	916.04	17	.04177	1	48	48	CIRC
10	P 4	P 5	916.04	915.50	13	.04154	1	48	48	CIRC

STATE OF TEXAS
C.D. BILLS
83877
LICENSED
PROFESSIONAL ENGINEER
C.D. Bills 2-3-99

Turner Collie & Braden Inc.
ENGINEERS • PLANNERS • PROJECT MANAGERS

UNIT: AUSTIN | JOB No.: 72-07401-022 | File:

Texas Department of Transportation

©1998 THDOT

US 183
620 MEDIAN POND
DRAINAGE DATA
SYSTEM 1 A & P - 50 YR
SCALE: AS NOTED

Designed	KKY	FED. RD. DIV. NO.	STATE	FEDERAL AID PROJECT NO.			ACCOUNT NO.
Checked	DLG	6	TEXAS	NH 99(556)			U.S.183
Drawn	JAM	STATE DIST. NO.	COUNTY	CONTROL NO.	SECTION NO.	JOB NO.	SHEET NO.
Checked	DLG	AUS	WILLIAMSON	0151	05	072	270b

DATE: 04/10/99
JOB No.: 72-07401-022
PATH: t:\ 07401022\drainage\ 183ddt90.dgn

```
$ 620LTMOD.DAT (T:\07401022\CNGORDER\THYSYS\620LT)
$ U.S. 183 SECT. 1 SYSTEM 1 ANALYSIS FOR NORTHEAST QUADRANT
$ INLETS ENTERING TRUNKLINE TO WQP
$
$*****************************************************************
$ ORIGINAL FILE (620LT-50.DAT) MODIFIED ON 08\23\00 TO REFLECT CHANGE
$ ORDER
$
$ MODIFICATIONS TO ORIGINAL RUNS 3 THRU 10 (MEJ)
$*****************************************************************
$
$ 50 YR FREQUENCY
SEWER                ANALYSIS  RUNOFF              SEWER     FREQUENCY= 50YR
COEF DESC A=PVMT    B=COMM    C=COM     D=RES     E=GRASS
$              A     B     C     D     E
RAT COEF    .90  .80  .75  .60  .40      MIN TC =   10.0WILLIAMSON
$
DA A 47   0.14                           L 200V2.0
DA A 48   0.07                           L 100V2.0
DA A 51   0.10                           L 130V2.0
$
JUNC A 46 TYPE=JUNCT
JUNC A 92 TYPE=JUNCT
JUNC P 01 TYPE=JUNCT
JUNC P 02 TYPE=JUNCT
JUNC A 47 TYPE=CSAG  11.0      40.0          .015  .33  3.3 10.0
JUNC A 48 TYPE=GSAG                                  6.0      8.19
SEW0075-- INADEQUATE INFO OF JUNC CARD FOR ANALYSIS OF GUTTER APPROACH TO SAG INLET- PLEASE PROVIDE APPROACH INFO
JUNC A 49 TYPE=JUNCT
JUNC A 51 TYPE=GSAG                                  6.0      8.19
SEW0075-- INADEQUATE INFO OF JUNC CARD FOR ANALYSIS OF GUTTER APPROACH TO SAG INLET- PLEASE PROVIDE APPROACH INFO
JUNC P 03 TYPE=JUNCT
JUNC P 04 TYPE=JUNCT
JUNC P 05 TYPE=JUNCT
$
$                       CRITICAL
$                         ELEV
$          ADDITIONAL RUNOFF        GRATE     APPR GRADE  APPR FLOW
$           DA    C     Tc         LENGTH       LT   RT  LT   RT
$           Ac        Min.     Ft.      Ft.        %    %   % OF CFS
$
$
SJUN A 47                923.53             0.44 0.44 90.0 10.0
$
OUTLET STATIONING        0.00 T.W. ELEV  920.75     P 05
DSGN  01   A 46 A 92 US 922.33 DS 922.25   13        98.5 012
DSGN  02   A 92 P 01 US 922.25 DS 922.17 13.6            012          BOX
DSGN  03   P 01 A 49 US 922.17 DS 921.63   68           012
DSGN  04   A 47 A 49 US 922.53 DS 920.38    8           012
DSGN  05   A 48 P 02 US 921.43 DS 920.14   23           012
DSGN  06   A 49 P 02 US 921.63 DS 921.35   35           012
DSGN  07   P 02 P 03 US 921.35 DS 920.70   81           012
DSGN  08   A 51 P 04 US 922.15 DS 918.79   28           012
DSGN  09   P 03 P 04 US 920.70 DS 920.00   17           012
DSGN  10   P 04 P 05 US 920.00 DS 919.50   13           012
$
ANAL  01   A 46 A 92     1    48    48
ANAL  02   A 92 P 01     1     4     4
ANAL  03   P 01 A 49     1    48    48
ANAL  04   A 47 A 49     1    18    18
ANAL  05   A 48 P 02     1    18    18
ANAL  06   A 49 P 02     1    48    48
ANAL  07   P 02 P 03     1    48    48
ANAL  08   A 51 P 04     1    18    18
ANAL  09   P 03 P 04     1    48    48
ANAL  10   P 04 P 05     1    48    48
```

SEWER

RUNOFF CALCULATIONS

RAINFALL FREQUENCY = 50 YR.

SURFACE DESCRIPTION OF RATIONAL COEFFICIENTS

A	B	C	D	E	F
PVMT	COMM	COM	RES	GRASS	
.9000	.8000	.7500	.6000	.4000	.0000

MINIMUM TIME OF CONCENTRATION = 10.0 MINUTES

E = .751 B = 92. D = 8.5

INLET RUNOFF CALCULATIONS

I.D.	AREA	"CA"	"TC"	INTENSITY	BASEFLOW	TOTAL FLOW
A47	.14	.13	1.67	10.28	.00	1.30
A48	.07	.06	.83	10.28	.00	.65
A51	.10	.09	1.08	10.28	.00	.93

SEWER

CUMULATIVE RUNOFF CALCULATIONS FOR PIPE RUNS

RUN	U.S. I.D.	D.S. I.D.	"CA"	"TC"	AREA	CUMULATIVE "CA"	CUMULATIVE "TC"	SUPPLY Q	INTENSITY	FLOW
01	A46	A92	.00	.00	.00	.00	10.00	98.50	10.28	98.50
02	A92	P 1	.00	.00	.00	.00	10.00	98.50	10.28	98.50
03	P 1	A49	.00	.00	.00	.00	10.00	98.50	10.28	98.50
04	A47	A49	.13	1.67	.14	.13	10.00	.00	10.28	1.30
05	A48	P 2	.06	.83	.07	.06	10.00	.00	10.28	.65
06	A49	P 2	.00	.00	.00	.13	10.00	98.50	10.28	99.80
07	P 2	P 3	.00	.00	.00	.19	10.00	98.50	10.28	100.44
08	A51	P 4	.09	1.08	.10	.09	10.00	.00	10.28	.93
09	P 3	P 4	.00	.00	.00	.19	10.00	98.50	10.28	100.44
10	P 4	P 5	.00	.00	.00	.28	10.00	98.50	10.28	101.37

SEWER

SEWER ANALYSIS

CONFIGURATION DATA

RUN	U.S. ID	D.S. ID	U.S. F.L. ELEV	D.S. F.L. ELEV	LENGTH FEET	SLOPE	BBLS	RISE	SPAN	SHAPE
01	A46	A92	918.33	918.25	13	.00616	1	48	48	CIRC
02	A92	P 1	918.25	918.17	13	.00588	1	4	4	BOX
03	P 1	A49	918.17	917.63	68	.00794	1	48	48	CIRC
04	A47	A49	921.03	918.88	8	.26875	1	18	18	CIRC
05	A48	P 2	919.93	918.64	23	.05609	1	18	18	CIRC
06	A49	P 2	917.63	917.35	35	.00800	1	48	48	CIRC
07	P 2	P 3	917.35	916.70	81	.00802	1	48	48	CIRC
08	A51	P 4	920.65	917.29	28	.12000	1	18	18	CIRC
09	P 3	P 4	916.70	916.00	17	.04118	1	48	48	CIRC
10	P 4	P 5	916.00	915.50	13	.03846	1	48	48	CIRC

HYDRAULIC DATA

RUN	U.S. ID	D.S. ID	'N'	JUNC LOSS	FLOW	U.S. HEAD	D.S. HEAD	HYDR. GRAD	DEPTH	VELOC.	PIPE CAPAC.
ENTRANCE CONTROLS. TOTAL HEAD AT UPSTREAM END FOR RUN NO. 01 IS 5.21											
01	A46	A92	.012	.00	98.50	923.54	921.66	.00401	.68	8.6*	122.1
02	A92	P 1	.012	.00	98.50	921.66	921.63	.00247	2.44*	6.2**	152.0
03	P 1	A49	.012	.00	98.50	921.63	921.36	.00401	.62	8.1*	138.7
ENTRANCE CONTROLS. TOTAL HEAD AT UPSTREAM END FOR RUN NO. 04 IS .60											
04	A47	A49	.012	.00	1.30	921.63	921.36	.00013	.10	.7**	59.0
05	A48	P 2	.012	.00	.65	921.21	921.21	.00003	.11	.4**	26.9
06	A49	P 2	.012	.00	99.80	921.36	921.21	.00411	.63	8.0*	139.2
07	P 2	P 3	.012	.00	100.44	921.21	920.88	.00417	.63	8.0**	139.4
ENTRANCE CONTROLS. TOTAL HEAD AT UPSTREAM END FOR RUN NO. 08 IS .51											
08	A51	P 4	.012	.00	.93	921.16	920.81	.00007	.11	.5**	39.4
09	P 3	P 4	.012	.00	100.44	920.88	920.81	.00417	.39	8.0**	315.8
10	P 4	P 5	.012	.00	101.37	920.81	920.75	.00424	.40	8.1**	305.2

0* BOX DEPTHS IN FEET

SEW0069--**PIPE FLOWING FULL DUE TO DOWNSTREAM CONTROL, NOT INSUFFICIENT CAPACITY- VELOCITY IS BASED ON FULL FLOW.
JUNCTION LOSSES MAY NEED TO BE CONSIDERED AT SUBMERGED JUNCTIONS

SEW0071--*PIPE FLOW DEPTH > NORMAL DEPTH DUE TO DOWNSTREAM CONTROL, NOT INSUFFICIENT CAPACITY- VELOCITY IS BASED ON ELEVATION OF HYDRAULIC GRADE LINE AT DOWNSTREAM ELEVATION.
JUNCTION LOSSES MAY NEED TO BE CONSIDERED AT SUBMERGED JUNCTIONS

STATE OF TEXAS
MARK E. JONES
81987
REGISTERED
PROFESSIONAL ENGINEER
10-05-00
A ONLY

CHANGE ORDER NO. 10

1 CHANGE ORDER
MODIFICATIONS TO ORIGINAL RUNS 3 THRU 10

Turner Collie & Braden Inc.
Engineers • Planners • Project Managers

Texas Department of Transportation

© 2000 by TxDOT

TEXAS TURNPIKE AUTHORITY DIVISION

US 183
620 MEDIAN POND
DRAINAGE DATA
SYSTEM 1A & P - 50 YR

DESIGNED:	FED. RD DIV. No.	STATE	FEDERAL AID PROJECT No.			HIGHWAY No.	
CHECKED:	6	TX	NH 99(556)			U.S. 183	
DRAWN:	STATE DISTRICT	COUNTY	CONTROL No.	SECTION No.	JOB No.	SHEET No.	
CHECKED:	AUS	WILLIAMSON	0151	05	072	270DA	

HYDRAULIC DATA

RUN	U.S. ID	D.S. ID	'N'	JUNC LOSS	FLOW	U.S. HEAD	D.S. HEAD	HYDR. GRAD	DEPTH	VELOC.	PIPE CAPAC.
ENTRANCE CONTROLS. TOTAL HEAD AT UPSTREAM END FOR RUN NO. 01 IS 5.21											
01	A46	A92	.012	.00	98.50	923.54	921.64	.00401	.68	8.7*	122.1
02	A92	P 1	.012	.00	98.50	921.64	921.61	.00247	2.44*	6.2**	152.0
03	P 1	P 2	.012	.00	98.50	921.61	921.21	.00401	.62	8.0*	138.1
ENTRANCE CONTROLS. TOTAL HEAD AT UPSTREAM END FOR RUN NO. 04 IS .60											
04	A47	A49	.012	.00	1.30	921.63	921.22	.00013	.16	.7**	22.4
05	A48	A49	.012	.00	.65	921.22	921.22	.00001	.08	.2*	51.3
06	A49	P 2	.012	.00	1.94	921.22	921.21	.00006	.13	.6**	51.1
07	P 2	P 3	.012	.00	100.44	921.21	920.88	.00417	.63	8.0**	138.3
ENTRANCE CONTROLS. TOTAL HEAD AT UPSTREAM END FOR RUN NO. 08 IS .51											
08	A51	P 4	.012	.00	.93	921.16	920.81	.00007	.12	.5**	31.1
09	P 3	P 4	.012	.00	100.44	920.88	920.81	.00417	.39	8.0**	318.0
10	P 4	P 5	.012	.00	101.37	920.81	920.75	.00424	.39	8.1**	317.1

0* BOX DEPTHS IN FEET

SEW0069--**PIPE FLOWING FULL DUE TO DOWNSTREAM CONTROL, NOT INSUFFICIENT CAPACITY- VELOCITY IS BASED ON FULL FLOW.
JUNCTION LOSSES MAY NEED TO BE CONSIDERED AT SUBMERGED JUNCTIONS

SEW0071--*PIPE FLOW DEPTH ℄ NORMAL DEPTH DUE TO DOWNSTREAM CONTROL, NOT INSUFFICIENT CAPACITY- VELOCITY IS BASED ON ELEVATION OF HYDRAULIC GRADE LINE AT DOWNSTREAM ELEVATION.
JUNCTION LOSSES MAY NEED TO BE CONSIDERED AT SUBMERGED JUNCTIONS

DATE: 04/10/99
JOB No.: 72-07401-022
PATH: I:\ 07401022\drainage\ 183ddt91.dgn

STATE OF TEXAS
C.D. BILLS
83877
LICENSED
PROFESSIONAL ENGINEER
C.D. Bills
5-3-99

Turner Collie & Braden Inc.
ENGINEERS • PLANNERS • PROJECT MANAGERS

AUSTIN | 72-07401-022

Texas Department of Transportation

©1998 TxDOT

US 183
620 MEDIAN POND
DRAINAGE DATA
SYSTEM 1 A & P - 50 YR
SCALE: AS NOTED

Designed	KKY	FED. RD. DIV. NO.	STATE	FEDERAL AID PROJECT NO.				SHEET NO.
Checked	DLG	6	TEXAS	NH 99(556)				U.S.183
Drawn	JAM	STATE DIST. NO.	COUNTY		CONTROL SEC.	SECTION NO.	JOB NO.	SHEET NO.
Checked	DLG	AUS	WILLIAMSON		0151	05	072	270c

```
$ 620RT-10.DAT
$ U.S. 183 SECT. 1 SYSTEM 1 ANALYSIS FOR NORTHWEST QUADRANT
$ INLETS ENTERING TRUNKLINE TO WQP
$ RIGHT OF CENTERLINE
$ 10 YR FREQUENCY CHECK FOR INLETS D 44 AND D 46
SEWER              ANALYSIS  RUNOFF    INLET              FREQUENCY= 10YR
COEF DESC A=PVMT    B=COMM    C=COM     D=RES     E=GRASS
$          A    B    C    D    E
RAT COEF   .90  .80  .75  .60  .40      MIN TC =   10.0WILLIAMSON
$
DA D 44     29                          L 200V1.5
DA D 46     15                          L 165V1.5
$
JUNC D 93 TYPE=JUNCT
JUNC R 01 TYPE=JUNCT
JUNC R 02 TYPE=JUNCT
JUNC D 44 TYPE=GSAG                                        6.0      8.19
JUNC R 03 TYPE=JUNCT
JUNC D 46 TYPE=GSAG                                        6.0      8.19
JUNC R 04 TYPE=JUNCT
$
$                        CRITICAL
$                           ELEV
$         ADDITIONAL RUNOFF         GRATE     APPR GRADE  APPR FLOW
$          DA    C    Tc           LENGTH       LT   RT  LT   RT
$          Ac       Min.     Ft.      Ft.        %    %   % OF CFS
$
$
$
OUTLET STATIONING        0.00 T.W. ELEV  920.75    R 04
$ 125 cfs is the approximate water quality flow
DSGN  02  D 93 R 01 US 925.51 DS 925.48 12.9       125. 012          BOX
DSGN  03  R 01 R 02 US 923.48 DS 920.45  357            012          BOX
DSGN  04  D 44 R 02 US 923.75 DS 920.24   36            012
DSGN  05  R 02 R 03 US 920.45 DS 919.61   99            012          BOX
DSGN  06  D 46 R 03 US 923.00 DS 919.40   36            012
DSGN  07  R 03 R 04 US 919.61 DS 919.50   13            012          BOX
$
ANAL  02  D 93 R 01     1    6    8
ANAL  03  R 01 R 02     1    4    6
ANAL  04  D 44 R 02     1   18   18
ANAL  05  R 02 R 03     1    4    6
ANAL  06  D 46 R 03     1   18   18
ANAL  07  R 03 R 04     1    4    6
ENDATA
```

SEWER

RUNOFF CALCULATIONS

RAINFALL FREQUENCY = 10 YR.

SURFACE DESCRIPTION OF RATIONAL COEFFICIENTS

A	B	C	D	E	F
PVMT	COMM	COM	RES	GRASS	
.9000	.8000	.7500	.6000	.4000	.0000

MINIMUM TIME OF CONCENTRATION = 10.0 MINUTES

E = .777 B = 77. D = 8.5

INLET RUNOFF CALCULATIONS

I.D.	AREA	"CA"	"TC"	INTENSITY	BASEFLOW	TOTAL FLOW
D44	.29	.26	2.22	7.98	.00	2.08
D46	.15	.14	1.83	7.98	.00	1.08

SEWER

INLET ANALYSIS

INLET I.D.	TYPE	FLOW (CFS)	INLET CAPACITY (CFS)	CARRYOVER (CFS)	CARRYOVER ASSIGNMENT INLET I.D.	CALCULATED POND WIDTH (FT)	ACTUAL LENGTH (FT)	MINIMUM COMPUTED LENGTH REQUIRED (FT)	ACTUAL AREA (SQ FT)	MINIMUM AREA REQUIRED (SQ FT)	ACTUAL HEAD (FT)
D44	GSAG	2.08	16.27	.00	---	.00	.0	.0	8.19	1.05	.01
D46	GSAG	1.08	16.27	.00	---	.00	.0	.0	8.19	.54	.00

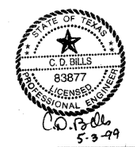

Turner Collie & Braden Inc.
ENGINEERS • PLANNERS • PROJECT MANAGERS

UNIT	JOB NO.	FILE
AUSTIN	72-07401-022	

Texas Department of Transportation

©1998 THDOT

US 183
620 MEDIAN POND
DRAINAGE DATA
SYSTEM 1 D & R – 10 YR

SCALE: AS NOTED

Designed	KKY	FED. RD. DIST. NO.	STATE	FEDERAL AID PROJECT NO.				HIGHWAY NO.
Checked	DLG	6	TEXAS	NH 99(556)				U.S.183
Drawn	JAM	STATE DIST. NO.	COUNTY	CONTROL NO.	SECTION NO.	JOB NO.		SHEET NO.
Checked	DLG	AUS	WILLIAMSON	0151	05	072		270d

DATE: 04/10/99
JOB No.: 72-07401-022
PATH: t:\ 07401022\drainage\ 183dd192.dgn

```
$ 10MOD.DAT (T:J01022\CNGORDER\THYSYS\620RT)
$ U.S. 183 SECT. 1 SYSTEM 1 ANALYSIS FOR NORTHWEST QUADRANT
$ INLETS ENTERING TRUNKLINE TO WQP
$
$*********************************************************************
$ ORIGINAL FILE (620RT-10.DAT) MODIFIED ON 08*\00 TO REFLECT CHANGE
$ ORDER
$
$ MODIFICATIONS TO ANALYZE SYSTEM IN RUNOFF AND INLET MODE ONLY
$*********************************************************************
$
$ RIGHT OF CENTERLINE
SEWER              ANALYSIS  RUNOFF    INLET              FREQUENCY= 10YR
COEF DESC A=PVMT    B=COMM    C=COM     D=RES     E=GRASS
$            A    B    C    D    E
RAT COEF    .90  .80  .75  .60  .40      MIN TC =   10.0WILLIAMSON
$
DA D 44     29                          L 200V1.5
DA D 46     15                          L 165V1.5
$
JUNC D 93 TYPE=JUNCT
JUNC R 01 TYPE=JUNCT
JUNC R 02 TYPE=JUNCT
JUNC D 44 TYPE=GSAG                                        6.0      8.19
SEW0075-- INADEQUATE INFO OF JUNC CARD FOR ANALYSIS OF GUTTER APPROACH TO SAG INLET- PLEASE PROVIDE APPROACH INFO
JUNC R 03 TYPE=JUNCT
JUNC D 46 TYPE=GSAG                                        6.0      8.19
SEW0075-- INADEQUATE INFO OF JUNC CARD FOR ANALYSIS OF GUTTER APPROACH TO SAG INLET- PLEASE PROVIDE APPROACH INFO
JUNC R 04 TYPE=JUNCT
JUNC F 08 TYPE=JUNCT
$
$                       CRITICAL
$                         ELEV
$         ADDITIONAL RUNOFF        GRATE     APPR GRADE  APPR FLOW
$          DA    C    Tc          LENGTH      LT   RT  LT   RT
$          Ac       Min.     Ft.      Ft.        %    %   % OF CFS
$
$
$
```

SEWER

RUNOFF CALCULATIONS

RAINFALL FREQUENCY = 10 YR.

SURFACE DESCRIPTION OF RATIONAL COEFFICIENTS

A	B	C	D	E	F
PVMT	COMM	COM	RES	GRASS	
.9000	.8000	.7500	.6000	.4000	.0000

MINIMUM TIME OF CONCENTRATION = 10.0 MINUTES

E = .777 B = 77. D = 8.5

INLET RUNOFF CALCULATIONS

I.D.	AREA	"CA"	"TC"	INTENSITY	BASEFLOW	TOTAL FLOW
D44	.29	.26	2.22	7.98	.00	2.08
D46	.15	.14	1.83	7.98	.00	1.08

SEWER

INLET ANALYSIS

INLET I.D.	TYPE	FLOW (CFS)	INLET CAPACITY (CFS)	CARRYOVER (CFS)	CARRYOVER ASSIGNMENT INLET I.D.	CALCULATED POND WIDTH (FT)	ACTUAL LENGTH (FT)	MINIMUM COMPUTED LENGTH REQUIRED (FT)	ACTUAL AREA (SQ FT)	MINIMUM AREA REQUIRED (SQ FT)	ACTUAL HEAD (FT)
D44	GSAG	2.08	16.27	.00	---	.00	.0	.0	8.19	1.05	.01
D46	GSAG	1.08	16.27	.00	---	.00	.0	.0	8.19	.54	.00

CHANGE ORDER NO. 10

STATE OF TEXAS
MARK E. JONES
81967
REGISTERED
PROFESSIONAL ENGINEER
10-03-00
A ONLY

⚠1 CHANGE ORDER
MODIFICATIONS TO ANALYZE SYSTEM IN RUNOFF AND INLET MODE ONLY

Turner Collie & Braden Inc.
Engineers • Planners • Project Managers

Texas Department of Transportation
© 2000 by TxDOT
TEXAS TURNPIKE AUTHORITY DIVISION

US 183
620 MEDIAN POND
DRAINAGE DATA
SYSTEM 1D & R - 10 YR

DESIGNED:	FED. RD DIV. No.	STATE	FEDERAL AID PROJECT No.			HIGHWAY No.	
CHECKED:	6	TX	NH 99(556)			U.S. 183	
DRAWN:	STATE DISTRICT	COUNTY	CONTROL No.	SECTION No.	JOB No.	SHEET No.	
CHECKED:	AUS	WILLIAMSON	0151	05	072	270dA	

```
$ 62ORT-50.DAT
$ U.S. 183 SECT. 1 SYSTEM 1 ANALYSIS FOR NORTHWEST QUADRANT
$ INLETS ENTERING TRUNKLINE TO WQP
$ RIGHT OF CENTERLINE
$ 50 YR FREQUENCY CHECK FOR INLETS D 44 AND D 46
SEWER              ANALYSIS  RUNOFF            SEWER     FREQUENCY= 50YR
COEF DESC A=PVMT   B=COMM    C=COM     D=RES    E=GRASS
$          A    B    C    D    E
RAT COEF   .90  .80  .75  .60  .40     MIN TC =   10.0WILLIAMSON
$
DA D 44     29                         L 200V1.5
DA D 46     15                         L 165V1.5
$
JUNC D 93 TYPE=JUNCT
JUNC R 01 TYPE=JUNCT
JUNC R 02 TYPE=JUNCT
JUNC D 44 TYPE=GSAG                                      6.0      8.19
JUNC R 03 TYPE=JUNCT
JUNC D 46 TYPE=GSAG                                      6.0      8.19
JUNC R 04 TYPE=JUNCT
$
$                      CRITICAL
$                        ELEV
$         ADDITIONAL RUNOFF        GRATE     APPR GRADE  APPR FLOW
$          DA   C    Tc           LENGTH      LT   RT  LT   RT
$          Ac       Min.     Ft.     Ft.        %    %  % OF CFS
$
$
$
OUTLET STATIONING        0.00 T.W. ELEV  920.75    R 04
$ 125 cfs is the approximate water quality flow
DSGN  02  D 93 R 01 US 925.51 DS 925.48 12.9       125. 012          BOX
DSGN  03  R 01 R 02 US 923.48 DS 920.45  357            012          BOX
DSGN  04  D 44 R 02 US 923.75 DS 920.24   36            012
DSGN  05  R 02 R 03 US 920.45 DS 919.61   99            012          BOX
DSGN  06  D 46 R 03 US 923.00 DS 919.40   36            012
DSGN  07  R 03 R 04 US 919.61 DS 919.50   13            012          BOX
$
ANAL  02  D 93 R 01     1    6    8
ANAL  03  R 01 R 02     1    4    6
ANAL  04  D 44 R 02     1   18   18
ANAL  05  R 02 R 03     1    4    6
ANAL  06  D 46 R 03     1   18   18
ANAL  07  R 03 R 04     1    4    6
ENDATA
```

SEWER

RUNOFF CALCULATIONS

RAINFALL FREQUENCY = 50 YR.

SURFACE DESCRIPTION OF RATIONAL COEFFICIENTS

A	B	C	D	E	F
PVMT	COMM	COM	RES	GRASS	
.9000	.8000	.7500	.6000	.4000	.0000

MINIMUM TIME OF CONCENTRATION = 10.0 MINUTES

E = .751 B = 92. D = 8.5

INLET RUNOFF CALCULATIONS

I.D.	AREA	"CA"	"TC"	INTENSITY	BASEFLOW	TOTAL FLOW
D44	.29	.26	2.22	10.28	.00	2.68
D46	.15	.14	1.83	10.28	.00	1.39

SEWER

CUMULATIVE RUNOFF CALCULATIONS FOR PIPE RUNS

RUN	U.S. I.D.	D.S. I.D.	"CA"	"TC"	AREA	CUMULATIVE "CA"	CUMULATIVE "TC"	SUPPLY Q	INTENSITY	FLOW
02	D93	R 1	.00	.00	.00	.00	10.00	125.00	10.28	125.00
03	R 1	R 2	.00	.00	.00	.00	10.00	125.00	10.28	125.00
04	D44	R 2	.26	2.22	.29	.26	10.00	.00	10.28	2.68
05	R 2	R 3	.00	.00	.00	.26	10.00	125.00	10.28	127.68
06	D46	R 3	.14	1.83	.15	.14	10.00	.00	10.28	1.39
07	R 3	R 4	.00	.00	.00	.40	10.00	125.00	10.28	129.07

SEWER

SEWER ANALYSIS

CONFIGURATION DATA

RUN	U.S. ID	D.S. ID	U.S. F.L. ELEV	D.S. F.L. ELEV	LENGTH FEET	SLOPE	BBLS	RISE	SPAN	SHAPE
02	D93	R 1	919.51	919.48	12	.00233	1	6	8	BOX
03	R 1	R 2	919.48	916.45	357	.00849	1	4	6	BOX
04	D44	R 2	922.25	918.74	36	.09750	1	18	18	CIRC
05	R 2	R 3	916.45	915.61	99	.00849	1	4	6	BOX
06	D46	R 3	921.50	917.90	36	.10000	1	18	18	CIRC
07	R 3	R 4	915.61	915.50	13	.00846	1	4	6	BOX

HYDRAULIC DATA

RUN	U.S. ID	D.S. ID	'N'	JUNC LOSS	FLOW	U.S. HEAD	D.S. HEAD	HYDR. GRAD	DEPTH	VELOC.	PIPE CAPAC.
02	D93	R 1	.012	.00	125.00	921.62	921.59	.00022	2.11*	7.4	410.8
03	R 1	R 2	.012	.00	125.00	921.41	920.91	.00139	1.72*	5.2**	309.2
ENTRANCE CONTROLS. TOTAL HEAD AT UPSTREAM END FOR RUN NO. 04 IS .89											
04	D44	R 2	.012	.00	2.68	923.14	920.91	.00056	.19	1.5**	35.5
05	R 2	R 3	.012	.00	127.68	920.91	920.77	.00145	1.75*	5.3**	309.1
ENTRANCE CONTROLS. TOTAL HEAD AT UPSTREAM END FOR RUN NO. 06 IS .62											
06	D46	R 3	.012	.00	1.39	922.12	920.77	.00015	.13	.8**	36.0
07	R 3	R 4	.012	.00	129.07	920.77	920.75	.00148	1.76*	5.4**	308.7

0* BOX DEPTHS IN FEET

SEW0069---**PIPE FLOWING FULL DUE TO DOWNSTREAM CONTROL, NOT INSUFFICIENT CAPACITY- VELOCITY IS BASED ON FULL FLOW.
JUNCTION LOSSES MAY NEED TO BE CONSIDERED AT SUBMERGED JUNCTIONS

STATE OF TEXAS C.D. BILLS 83877 LICENSED PROFESSIONAL ENGINEER
C.D. Bills
5-3-99

DATE: 04/10/99
JOB No.: 72-07401-022
PATH: t:\ 07401022\drainage\ 183ddt93.dgn

Turner Collie & Braden Inc.
ENGINEERS • PLANNERS • PROJECT MANAGERS

Unit	Job No.	File
AUSTIN	72-07401-022	

Texas Department of Transportation

©1998 TxDOT

US 183
620 MEDIAN POND
DRAINAGE DATA
SYSTEM 1 D & R – 50 YR
SCALE: AS NOTED

Designed	KKY	FED. RD. DIV. NO.	STATE	FEDERAL AID PROJECT NO.			HIGHWAY NO.
Checked	DLG	6	TEXAS	NH 99(556)			U.S.183
Drawn	JAM	STATE DIST. NO.	COUNTY	CONTROL NO.	SECTION NO.	JOB NO.	SHEET NO.
Checked	DLG	AUS	WILLIAMSON	0151	05	072	27De

```
$ 620RTMOD.DAT (T:\07401022\CNGORDER\THYSYS\620RT)
$ U.S. 183 SECT. 1 SYSTEM 1 ANALYSIS FOR NORTHWEST QUADRANT
$ INLETS ENTERING TRUNKLINE TO WQP
$
$*****************************************************************
$ ORIGINAL FILE (620RT-50.DAT) MODIFIED ON 08\23\00 TO REFLECT CHANGE
$ ORDER
$
$ MODIFICATIONS TO ORIGINAL RUNS 2 AND 3
$*****************************************************************
$
$ RIGHT OF CENTERLINE
$ 50 YR FREQUENCY CHECK FOR INLETS D 44 AND D 46
SEWER                ANALYSIS  RUNOFF          SEWER     FREQUENCY= 50YR
COEF DESC A=PVMT     B=COMM    C=COM     D=RES     E=GRASS
$          A    B    C    D    E
RAT COEF   .90  .80  .75  .60  .40      MIN TC =   10.0WILLIAMSON
$
DA D 44     29                          L 200V1.5
DA D 46     15                          L 165V1.5
$
JUNC D 93 TYPE=JUNCT
JUNC R 01 TYPE=JUNCT
JUNC R 02 TYPE=JUNCT
JUNC D 44 TYPE=GSAG                                    6.0      8.19
SEW0075-- INADEQUATE INFO OF JUNC CARD FOR ANALYSIS OF GUTTER APPROACH TO SAG INLET- PLEASE PROVIDE APPROACH INFO
JUNC R 03 TYPE=JUNCT
JUNC D 46 TYPE=GSAG                                    6.0      8.19
SEW0075-- INADEQUATE INFO OF JUNC CARD FOR ANALYSIS OF GUTTER APPROACH TO SAG INLET- PLEASE PROVIDE APPROACH INFO
JUNC R 04 TYPE=JUNCT
JUNC F 08 TYPE=JUNCT
$
$                         CRITICAL
$                           ELEV
$          ADDITIONAL RUNOFF          GRATE      APPR GRADE  APPR FLOW
$           DA    C    Tc             LENGTH       LT   RT  LT   RT
$           Ac        Min.      Ft.      Ft.         %    %   % OF CFS
$
$
$
OUTLET STATIONING        0.00 T.W. ELEV  920.75    R 04
$ 125 cfs is the approximate water quality flow
DSGN  02  D 93 R 01 US 925.32 DS 925.26 12.9       125. 012          BOX
DSGN  03  R 01 F 08 US 923.28 DS 922.56   35           012          BOX
DSGN  3A  F 08 R 02 US 922.56 DS 920.45  248           012          BOX
DSGN  04  D 44 R 02 US 923.75 DS 920.24   23           012
DSGN  05  R 02 R 03 US 920.45 DS 919.55  106           012          BOX
DSGN  06  D 46 R 03 US 923.75 DS 919.40   22           012
DSGN  07  R 03 R 04 US 919.55 DS 919.50    5           012          BOX
$
ANAL  02  D 93 R 01      1    6    8
ANAL  03  R 01 F 08      1    4    6
ANAL  3A  F 08 R 02      1    4    6
ANAL  04  D 44 R 02      1   18   18
ANAL  05  R 02 R 03      1    4    6
ANAL  06  D 46 R 03      1   18   18
ANAL  07  R 03 R 04      1    4    6
```

SEWER

RUNOFF CALCULATIONS

RAINFALL FREQUENCY = 50 YR.

SURFACE DESCRIPTION OF RATIONAL COEFFICIENTS

A	B	C	D	E	F
PVMT	COMM	COM	RES	GRASS	
.9000	.8000	.7500	.6000	.4000	.0000

MINIMUM TIME OF CONCENTRATION = 10.0 MINUTES

E = .751 B = 92. D = 8.5

INLET RUNOFF CALCULATIONS

I.D.	AREA	"CA"	"TC"	INTENSITY	BASEFLOW	TOTAL FLOW
D44	.29	.26	2.22	10.28	.00	2.68
D46	.15	.14	1.83	10.28	.00	1.39

SEWER

CUMULATIVE RUNOFF CALCULATIONS FOR PIPE RUNS

RUN	U.S. I.D.	D.S. I.D.	"CA"	"TC"	AREA	CUMULATIVE "CA"	CUMULATIVE "TC"	SUPPLY Q	INTENSITY	FLOW
02	D93	R 1	.00	.00	.00	.00	10.00	125.00	10.28	125.00
03	R 1	F 8	.00	.00	.00	.00	10.00	125.00	10.28	125.00
3A	F 8	R 2	.00	.00	.00	.00	10.00	125.00	10.28	125.00
04	D44	R 2	.26	2.22	.29	.26	10.00	.00	10.28	2.68
05	R 2	R 3	.00	.00	.00	.26	10.00	125.00	10.28	127.68
06	D46	R 3	.14	1.83	.15	.14	10.00	.00	10.28	1.39
07	R 3	R 4	.00	.00	.00	.40	10.00	125.00	10.28	129.07

SEWER

SEWER ANALYSIS

CONFIGURATION DATA

RUN	U.S. ID	D.S. ID	U.S. F.L. ELEV	D.S. F.L. ELEV	LENGTH FEET	SLOPE	BBLS	RISE	SPAN	SHAPE
02	D93	R 1	919.32	919.26	12	.00465	1	6	8	BOX
03	R 1	F 8	919.28	918.56	35	.02057	1	4	6	BOX
3A	F 8	R 2	918.56	916.45	248	.00851	1	4	6	BOX
04	D44	R 2	922.25	918.74	23	.15261	1	18	18	CIRC
05	R 2	R 3	916.45	915.55	106	.00849	1	4	6	BOX
06	D46	R 3	922.25	917.90	22	.19773	1	18	18	CIRC
07	R 3	R 4	915.55	915.50	5	.01000	1	4	6	BOX

HYDRAULIC DATA

RUN	U.S. ID	D.S. ID	'N'	JUNC LOSS	FLOW	U.S. HEAD	D.S. HEAD	HYDR. GRAD	DEPTH	VELOC.	PIPE CAPAC.
ENTRANCE CONTROLS. TOTAL HEAD AT UPSTREAM END FOR RUN NO. 02 IS 3.02											
02	D93	R 1	.012	.00	125.00	922.34	921.30	.00022	1.66*	2.6**	580.6
03	R 1	F 8	.012	.00	125.00	921.30	921.25	.00139	1.27*	5.2**	481.4
3A	F 8	R 2	.012	.00	125.00	921.25	920.91	.00139	1.72*	5.2**	309.6
ENTRANCE CONTROLS. TOTAL HEAD AT UPSTREAM END FOR RUN NO. 04 IS .89											
04	D44	R 2	.012	.00	2.68	923.14	920.91	.00056	.17	1.5**	44.5
05	R 2	R 3	.012	.00	127.68	920.91	920.76	.00145	1.75*	5.3**	309.3
ENTRANCE CONTROLS. TOTAL HEAD AT UPSTREAM END FOR RUN NO. 06 IS .62											
06	D46	R 3	.012	.00	1.39	922.87	920.76	.00015	.11	.8**	50.6
07	R 3	R 4	.012	.00	129.07	920.76	920.75	.00148	1.66*	5.4**	335.6

0* BOX DEPTHS IN FEET

SEW0069--**PIPE FLOWING FULL DUE TO DOWNSTREAM CONTROL, NOT INSUFFICIENT CAPACITY- VELOCITY IS BASED ON FULL FLOW.
JUNCTION LOSSES MAY NEED TO BE CONSIDERED AT SUBMERGED JUNCTIONS

STATE OF TEXAS
MARK E. JONES
81987
REGISTERED
PROFESSIONAL ENGINEER
10-03-00
A ONLY

⚠ CHANGE ORDER
MODIFICATIONS TO ORIGINAL RUNS 2 AND 3

CHANGE ORDER NO. 10

Turner Collie & Braden Inc.
Engineers • Planners • Project Managers

Texas Department of Transportation
© 2000 by TxDOT
TEXAS TURNPIKE AUTHORITY DIVISION

US 183
620 MEDIAN POND
DRAINAGE DATA
SYSTEM 1D & R - 50 YR

DESIGNED:	FED. RD DIV. No.	STATE	FEDERAL AID PROJECT No.			HIGHWAY No.	
CHECKED:	6	TX	NH 99(556)			U.S. 183	
DRAWN:	STATE DISTRICT	COUNTY	CONTROL No.	SECTION No.	JOB No.	SHEET No.	
CHECKED:	AUS	WILLIAMSON	0151	05	072	270eA	

10-02-00

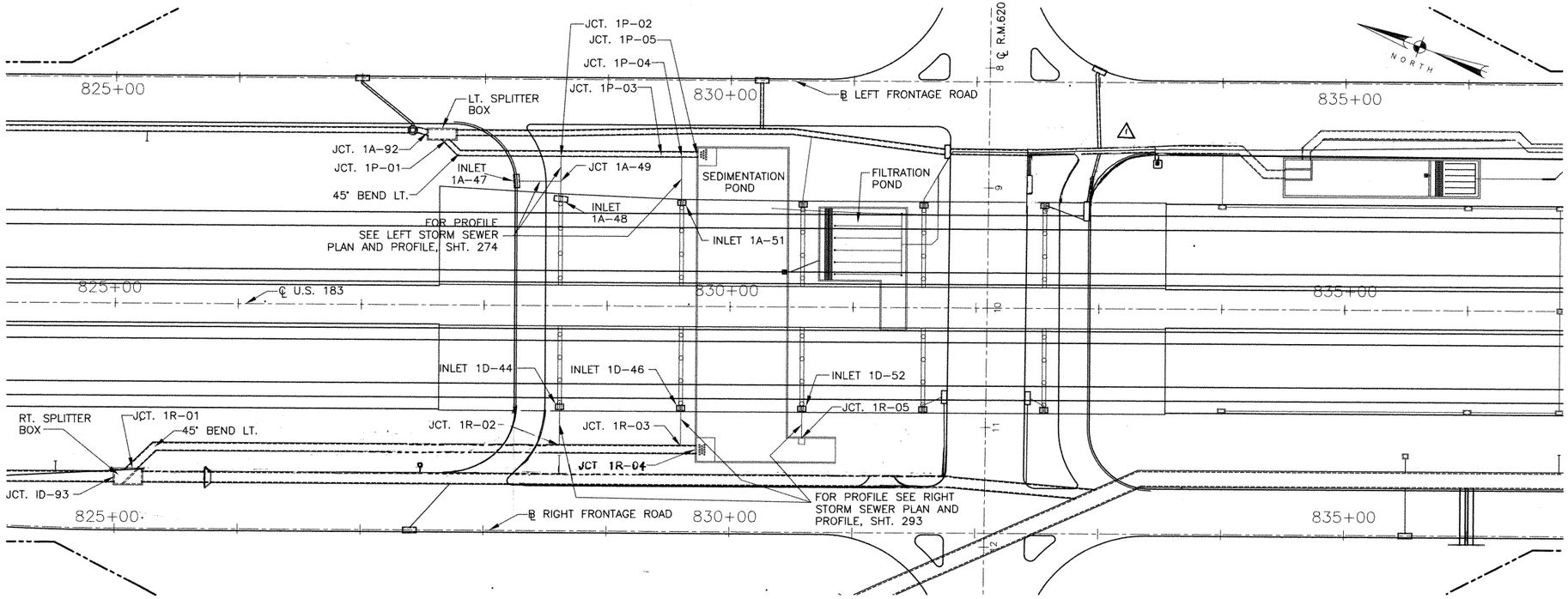

CHANGE ORDER NO. 16

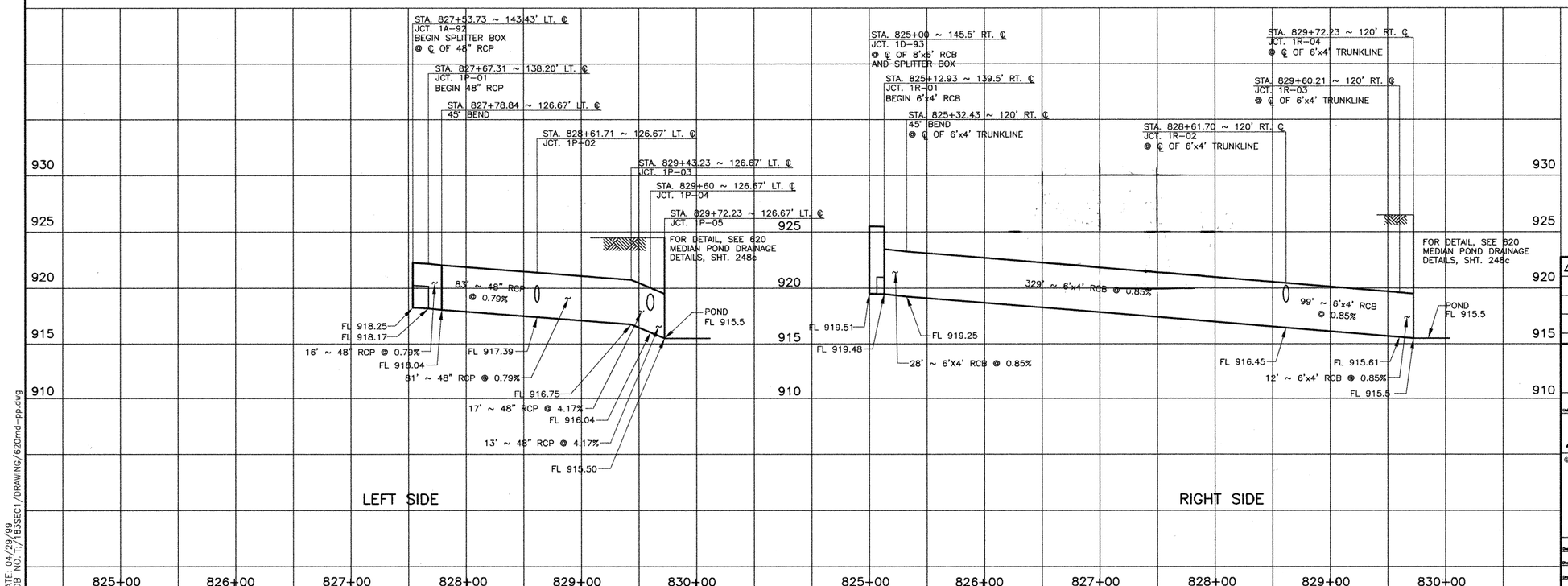

C. O. Bills 5-5-99
STATE OF TEXAS
C. O. BILLS
83877
LICENSED PROFESSIONAL ENGINEER

⚠	CO #16	LEFT TURN BAY NB FRONT RD	

Turner Collie & Braden Inc.
ENGINEERS • PLANNERS • PROJECT MANAGERS

Unit	Job No.	File
AUSTIN	72-07401-022	

Texas Department of Transportation

© 1998 TxDOT

620 MEDIAN POND SPLITTER BOX PLAN AND PROFILE

SCALE:H:1"=50', V:1"=5'

Designed	CDB	FED. RD. DIV. NO.	STATE	FEDERAL AID PROJECT NO.				HIGHWAY NO.
Checked	DLG	6	TEXAS	NH 99(556)				U.S.183
Drawn	GWS	STATE DIST. NO.	COUNTY	CONTROL NO.	SECTION NO.	JOB NO.		SHEET NO.
Checked	DLG	AUS	WILLIAMSON	0151	05	072		328

DATE: 04/29/99
JOB NO. TJ1835EC1/DRAWING/620md-pp.dwg

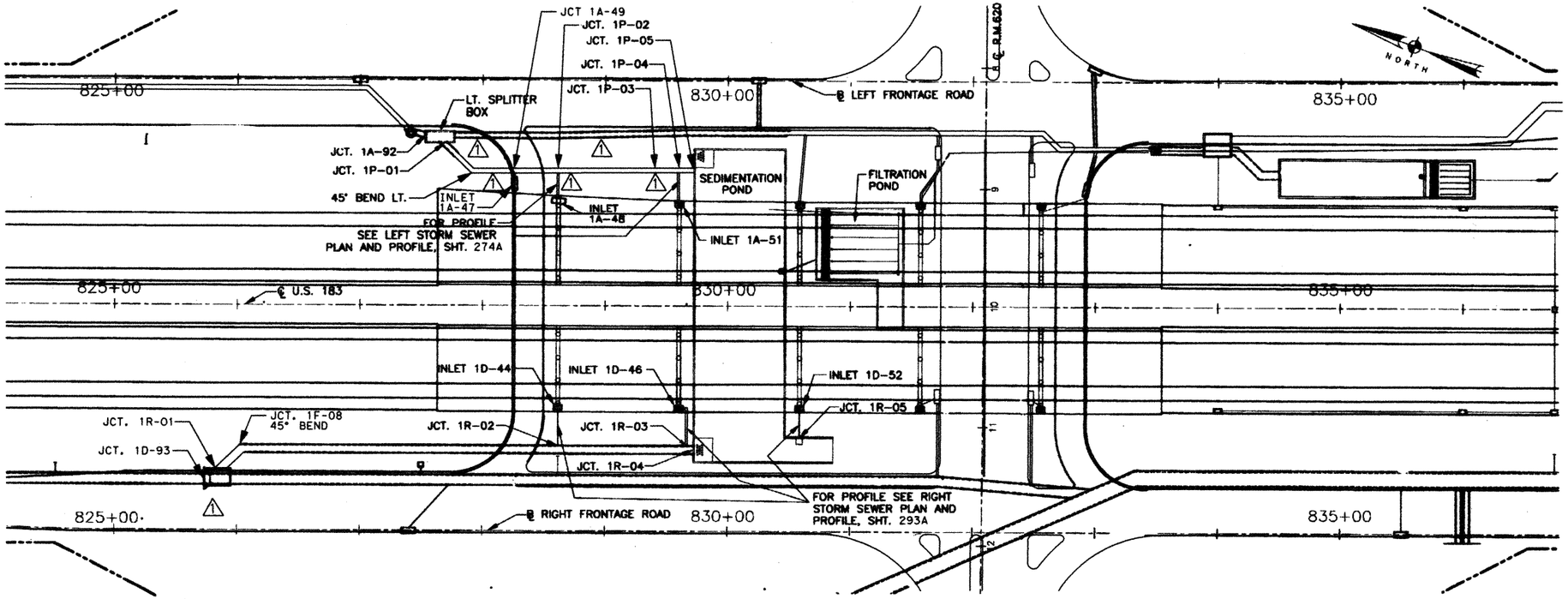

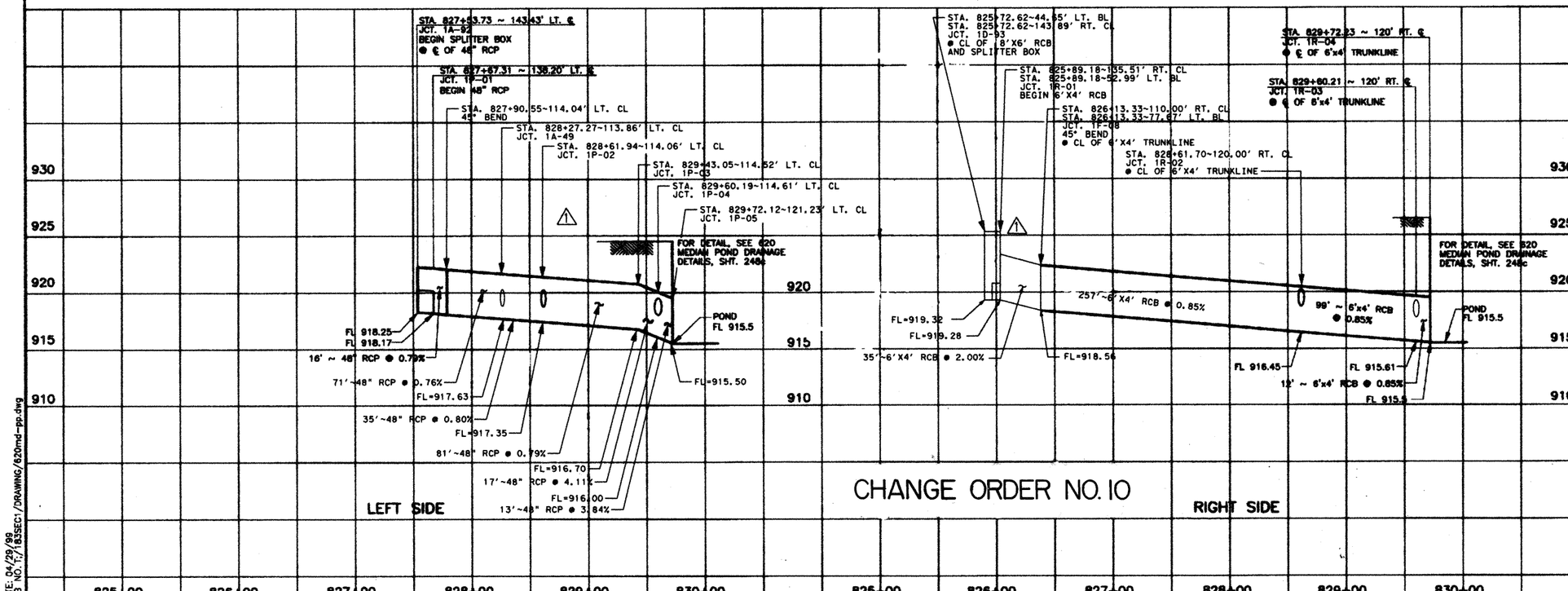

1. FOR STORM SEWER PROFILE 1A-47 TO 1A-49, SEE SHEET 274 A.
2. FOR STORM SEWER PROFILE 1D-46 TO 1R-03, SEE SHEET 293 A.
3. FOR INLETS 1A-44, 1A-46, 1A-51 AND 1A-52, SEE SCUPPER DETAILS, INTERIOR BENT DETAILS, SHEETS 448 AND 449.

STATE OF TEXAS MARK E. JONES 81987 REGISTERED PROFESSIONAL ENGINEER

Mark E. Jones 10-03-00 △ ONLY

C.D. Bills 5-3-99

STATE OF TEXAS C.D. BILLS 83877 LICENSED PROFESSIONAL ENGINEER

1	CHANGE ORDER NO. 10

Turner Collie & Braden Inc.
ENGINEERS • PLANNERS • PROJECT MANAGERS

AUSTIN | 72-07401-022

Texas Department of Transportation

620 MEDIAN POND
SPLITTER BOX
PLAN AND PROFILE

SCALE: H:1"=50', V:1"=5'

CDB			FEDERAL AID PROJECT NO.			
DLG	6	TEXAS	NH 99(556)			U.S.183
GWS		COUNTY				
DLG	AUS	WILLIAMSON	0151	05	072	328A

DATE: 04/29/99
JOB NO. T:/183SEC1/DRAWING/620md-pp.dwg

BASIN B

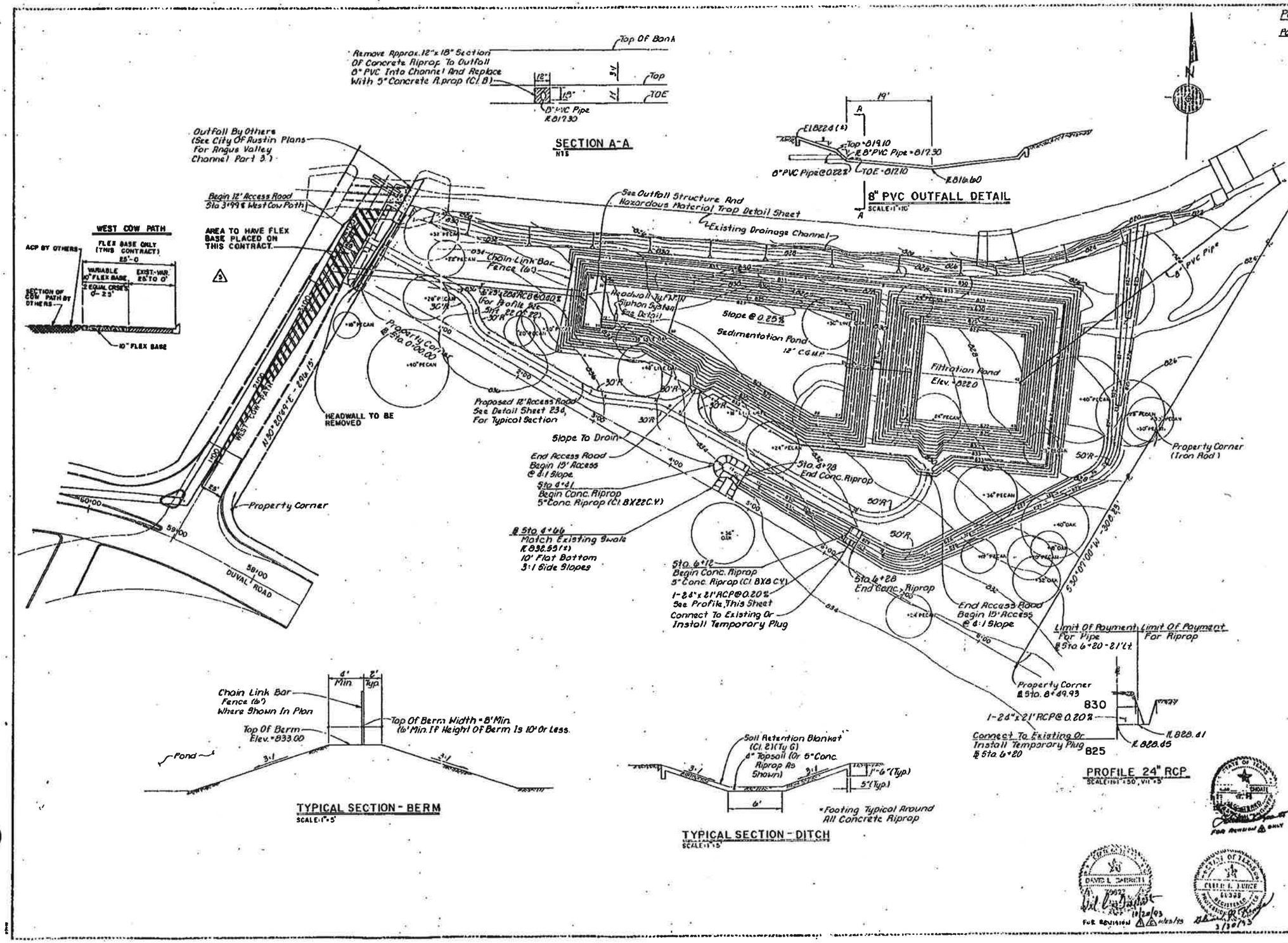

Point Location Table

Point No	Station	Offset	Elevation
	Access Road		
1	0+00	50'	834.3
2	0+95	60'	834.8
3	1+21	38'	834.8
4	1+48	25'	834.8
5	2+00	25'	836.8
6	2+96	295'	836.8
7	3+30	525'	835.8
8	3+45	54'	835.3
9	3+81	56'	834.8
10	4+08	56'	833.8
11	4+54	137'	829.0
	Drainage Ditch		
12	4+66	89'	830.30
13	4+98	29'	830.0
14	5+59	30'	829.0
15	6+59	31'	828.0
16	4+66	20'	832.35
17	6+99	53'	
18	7+31	100'	827.0
19	7+80	182'	826.0
20	8+13	225'	
21	8+23	246'	825.0
22	8+17	271'	
23	7+99	310'	824.0
24	7+57	402'	823.0
	Sedimentation Pond		
25	4+66	252'	823.0
26	5+12	197'	E 822.39
27	5+39	143'	823.0
28	5+10	130'	823.0
29	(Not Used)		
30	3+22	130'	823.0
31	2+98	127'	824.0
32	2+88.5	105'	824.0
33	2+93	96'	827.8
34	2+95	68'	827.8
35	2+14.5	118'	E 816.16
36	2+10	148'	827.8
37	2+29	150'	827.8
38	2+32	141'	824.0
39	3+11	152'	823.0
	Filtration Pond		
40	5+57	278'	822.0
41	6+69	328'	822.0
42	6+92	273'	E 818.16
43	7+19	230'	822.0
44	6+02	179'	822.0
45	5+80	227'	822.0
46	8+26.5	467'	E 817.34
47	0+12 (±)	630.0' (±)	E 817.30

FIELD CHANGE NO. 13

5	11/04	ADDED WEST COW PATH PAVEMENT STRUCTURE	
2	11/03	Extended RCB To Angus Valley Channel	
1	07/03	Added Elev. 24" RCP Riprap Details, Regraded Ditch, Deleted 30" RCP	
NO.	DATE	REVISION	APPROVED

Turner Collie & Braden Inc.
CONSULTING ENGINEERS
AUSTIN, HOUSTON, CORPUS CHRISTI, ARTHUR
COLORADO OFFICE

STATE DEPARTMENT OF HIGHWAYS AND PUBLIC TRANSPORTATION

WATER QUALITY POND LAYOUT

SCALE: 1"=50'

Designed DLG	DES. NO. DIV. NO.	STATE	FEDERAL AID PROJECT NO.				NUMBER NO.
Drawn AGH	6	TEXAS	F 1068 (32)				U.S. 183
Traced WWS	CHECK DATE NO.	COUNTY	CONTROL NO.	SECTION NO.	JOB NO.		SHEET NO.
Checked DLG	15	TRAVIS	0151	06	080		233A1

DANIEL L. DARRITT 79027 LICENSED PROFESSIONAL ENGINEER STATE OF TEXAS
FOR REVISION 10/20/03
CHARLES L. JUNGE 64328 REGISTERED PROFESSIONAL ENGINEER STATE OF TEXAS
3/30/05

SEDIMENTATION/FILTRATION CALCULATIONS

CONTRIBUTING DRAINAGE AREA:

US 183	=	55.68 AC
ADJACENT DEVELOPMENT	=	27.30 AC
TOTAL ACRES	=	82.98 AC

CAPTURE VOLUME:

CAPTURE VOLUME = 0.5"

WATER QUALITY VOLUME:

W.Q.V. = (82.98) (43,560) (.50)/12 = 150,555 C.F.

FILTRATION AREA:

A_f min = AD N/18 AD = 82.98 N = .50/12 = .0417 Ft.
= 82.98 x 0.0417/18
= 8,364 SF

SEDIMENTION AREA:

A_s min = AD N/10
= 82.98 x 0.0417/10
= 15,056 SF

SUMMARY	REQUIRED	PROVIDED
W.Q.V.	150,555 CF	152,830 CF
FITRATION AREA	8364 SF	8865 SF
SEDIMENTATION AREA	15,056 SF	15,703 SF
HAZARDOUS MATERIAL TRAP VOLUME	1337 CF	1337 CF

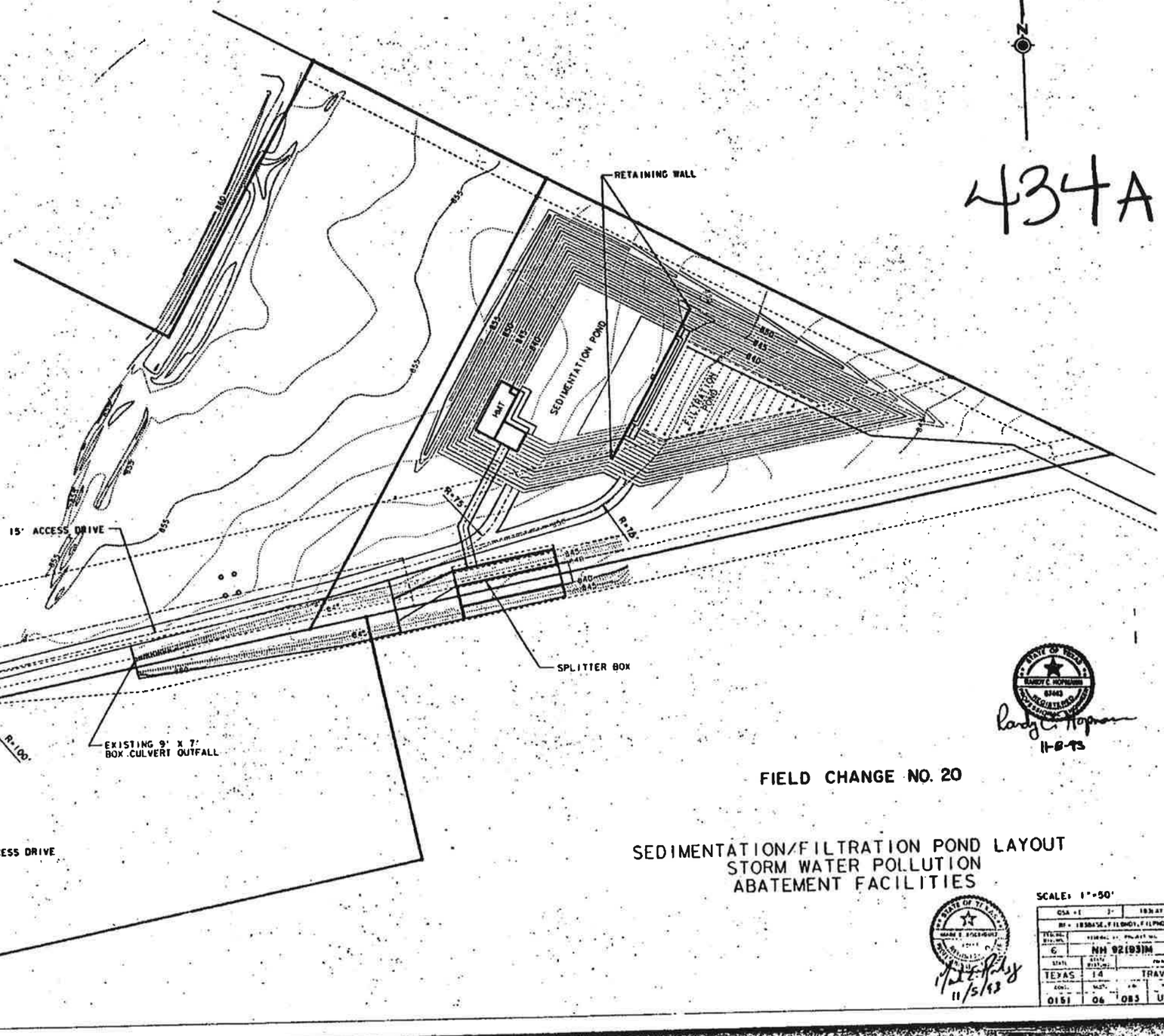

434A

HARDY C. HOPKINS 67443 REGISTERED PROFESSIONAL ENGINEER
11-8-93

FIELD CHANGE NO. 20

SEDIMENTATION/FILTRATION POND LAYOUT
STORM WATER POLLUTION
ABATEMENT FACILITIES

SCALE: 1"=50'

MARK E. HOGGARD 67443 REGISTERED PROFESSIONAL ENGINEER
11/5/93

STATE	DISTRICT	FEDERAL AID PROJECT NO.	SHEET NO.
TEXAS	14	NH 92(93)IM	434A
CONTROL	SECT.	JOB	HIGHWAY NO.
0151	06	083	US 183

DGN: E:\71\10\183LAY.DGN
DT: 23-OCT-1993

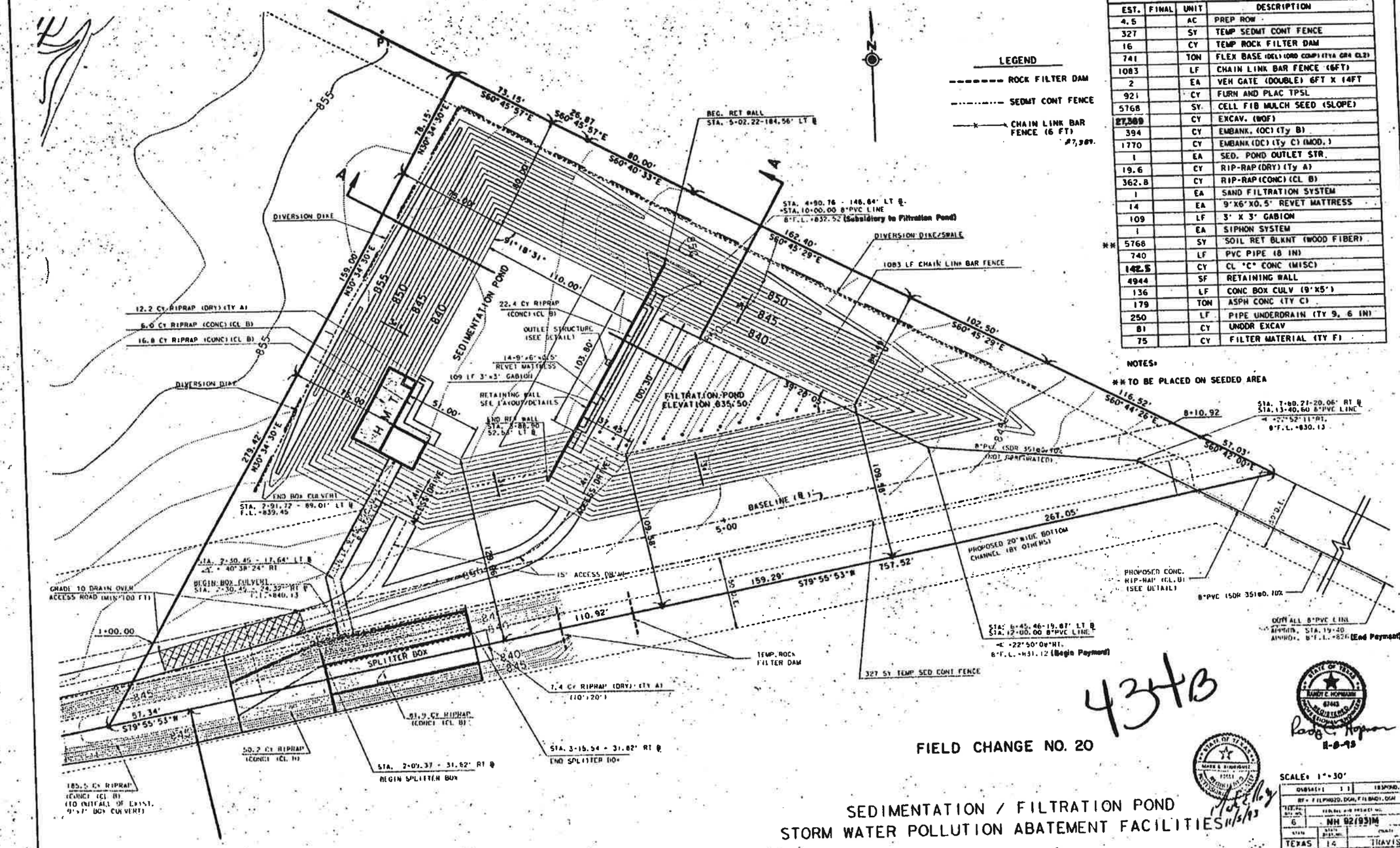

TABLE OF ESTIMATED QUANTITES			
EST.	FINAL	UNIT	DESCRIPTION
4.5		AC	PREP ROW
327		SY	TEMP SEDMT CONT FENCE
16		CY	TEMP ROCK FILTER DAM
741		TON	FLEX BASE (DEL) (ORD COMP) (TY A GR 4 CL 2)
1083		LF	CHAIN LINK BAR FENCE (6FT)
2		EA	VEH GATE (DOUBLE) 6FT X 14FT
921		CY	FURN AND PLAC TPSL
5768		SY	CELL FIB MULCH SEED (SLOPE)
27,389		CY	EXCAV. (ROF)
394		CY	EMBANK. (OC) (Ty B)
1770		CY	EMBANK (DC) (Ty C) (MOD.)
1		EA	SED. POND OUTLET STR.
19.6		CY	RIP-RAP (DRY) (Ty A)
362.8		CY	RIP-RAP (CONC) (CL B)
1		EA	SAND FILTRATION SYSTEM
14		EA	9'X6'X0.5' REVET MATTRESS
109		LF	3' X 3' GABION
1		EA	SIPHON SYSTEM
** 5768		SY	SOIL RET BLKNT (WOOD FIBER)
740		LF	PVC PIPE (8 IN)
142.5		CY	CL "C" CONC (MISC)
4944		SF	RETAINING WALL
136		LF	CONC BOX CULV (9'X5')
179		TON	ASPH CONC (TY C)
250		LF	PIPE UNDERDRAIN (TY 9, 6 IN)
81		CY	UNDCR EXCAV
75		CY	FILTER MATERIAL (TY F)

NOTES:

** TO BE PLACED ON SEEDED AREA

4343

FIELD CHANGE NO. 20

SEDIMENTATION / FILTRATION POND
STORM WATER POLLUTION ABATEMENT FACILITIES

SCALE: 1"=30'

DIST.	COUNTY		
6	NH 92(93)M		4340
STATE	STATE PROJ. NO.		
TEXAS	14	TRAVIS	
SHEET	SEC.	JOB	SHEET NO.
01			

STATE OF TEXAS — RANDY E. HOPMANN — 67443 — REGISTERED — PROFESSIONAL ENGINEER

11-8-93

STATE OF TEXAS — MARK S. RINDFLEISCH — 72331 — REGISTERED — PROFESSIONAL ENGINEER

11/5/93

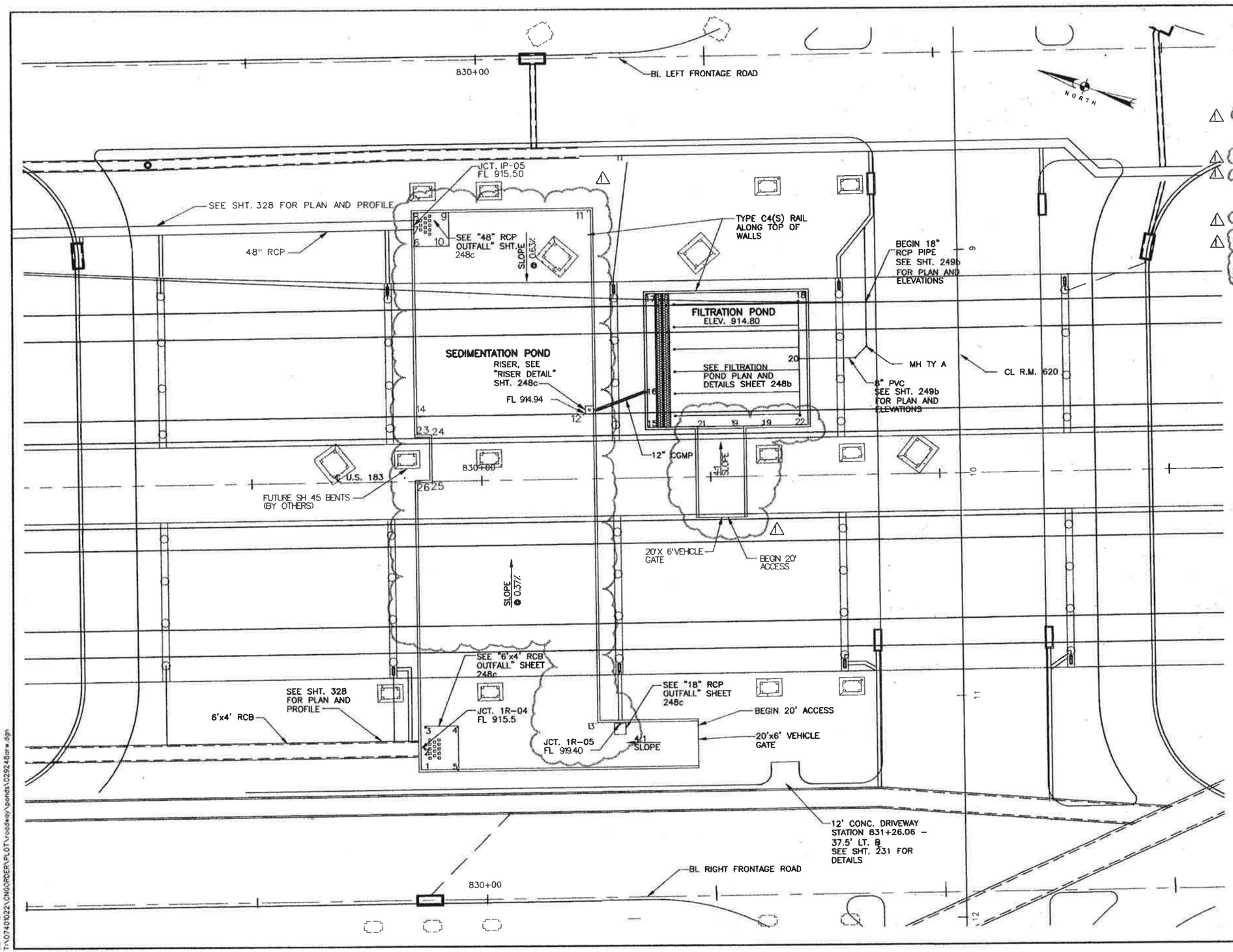

POINT LOCATION TABLE

POINT No.	STATION ℄ US 183	OFFSET	ELEV. ℄
1	829+72.23	129.83' RT.	915.52
2	829+72.23	120.00' RT.	915.50
3			915.48
4			915.44
5			915.49
6			915.46
7	829+72.23	114.69' LT.	915.50
8			915.52
9			915.46
10			915.41
11			915.50
12	830+47.49	30.88' LT.	914.94
13			915.48
14	829+72.23	30.88' LT.	915.54
15	830+72.73	22.58' LT.	914.80
16	830+72.73	38.49' LT.	914.80
17			914.80
18			914.80
19			914.80
20	831+39.23	62.58' LT.	
21	830+94.73	22.58'LT	914.80
22	831+42.73	22.58'LT	914.80
23	829+72.00	20.65'LT	914.97
24	829+78.41	20.65'LT	914.92
25	829+78.41	0.86'RT	915.00
26	829+72.00	0.86'RT	915.05

NOTES:

1. SEE WATER QUALITY PONDS STRUCTURAL DETAILS, SHT. 261e, FOR POND DIMENSIONS AND REINFORCEMENT.
2. For current information about gravity & force mains in reference to change order #10, contact City of Austin Water & Wastewater Dept.

STATE OF TEXAS C.D. BILLS 83877 LICENSED PROFESSIONAL ENGINEER
C.D. Bills 5-3-99

STATE OF TEXAS DAVID L. GARRETT 76626 REGISTERED PROFESSIONAL ENGINEER
6/22/01
For Revision #1 Only

NO.	DATE	REVISION	APPROV.
4			
3			
2			
1	6/01	CHANGE ORDER 10	

Turner Collie & Braden Inc.
ENGINEERS • PLANNERS • PROJECT MANAGERS

AUSTIN | 72-07401-022

Texas Department of Transportation

620 MEDIAN
WATER QUALITY POND LAYOUT

SCALE: 1"=20'

CH						
DLG	6	TEXAS	NH 99(556)			U.S.183
RP	STATE DIST. NO.	COUNTY				
DLG	14	WILLIAMSON	0151	05	072	248c

09:27:04
22 JUN 2001
T:\07401022\CNGORDER\PLOT\roadway\ponds\029248crw.dgn

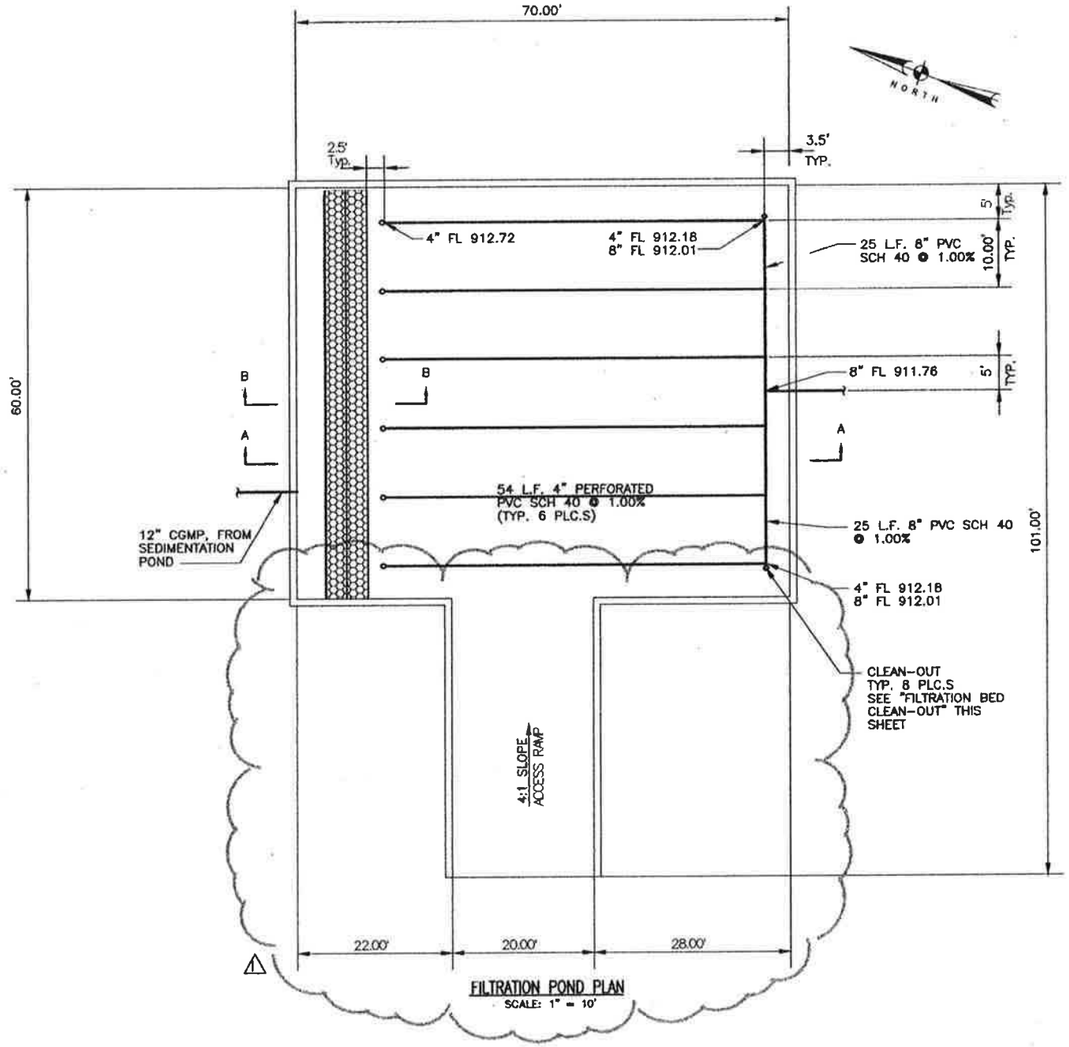

FILTRATION POND PLAN
SCALE: 1" = 10'

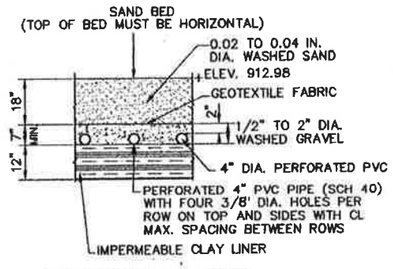

SAND FILTRATION BED SECTION
SCALE: 1/2" = 1'-0"

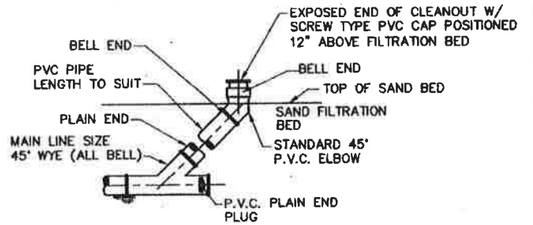

NOTE:
TO BE PLACED ON BEDDING MEETING SPECIFICATION FOR TYPE AND SIZE OF PIPE.

FILTRATION BED CLEAN-OUT
SCALE: 1/2" = 1'-0"

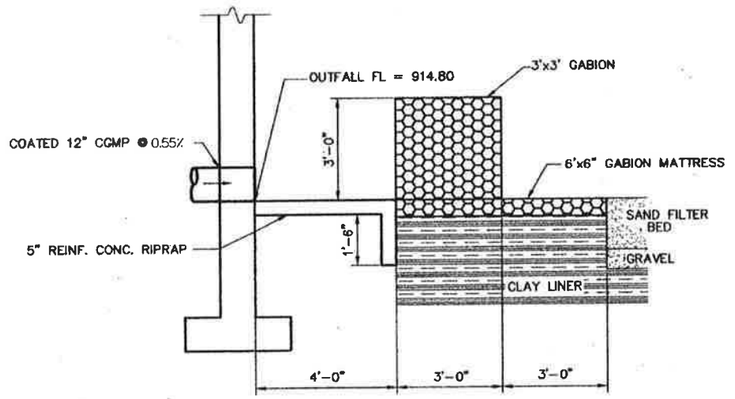

SECTION B-B
SCALE: 1/2" = 1'-0"

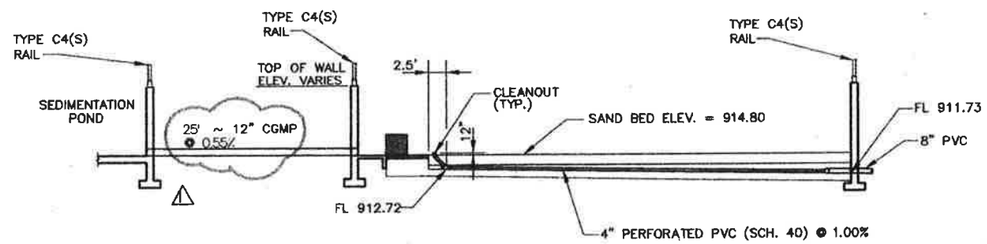

FILTRATION POND SECTION A-A
SCALE: 1" = 10'

NOTE:

1. FOR REINFORCEMENT AND DIMENSIONS SEE WATER QUALITY PONDS STRUCTURAL DETAILS, SHT. 261e.

STATE OF TEXAS
C. D. BILLS
83877
LICENSED PROFESSIONAL ENGINEER
5-3-99

STATE OF TEXAS
DAVID L. GARRETT
76626
REGISTERED PROFESSIONAL ENGINEER
6/22/01
For Revision #1 only

NO.	DATE	REVISION	APPROV.
4			
3			
2			
1	6/01	CHANGE ORDER 10	

Turner Collie & Braden Inc.
ENGINEERS • PLANNERS • PROJECT MANAGERS

AUSTIN | 72-07401-022

Texas Department of Transportation

620 MEDIAN
FILTRATION POND
PLAN AND DETAILS

CH		STATE	FEDERAL AID PROJECT NO.			
DLG	6	TEXAS	NH 99(556)			U.S.183
RP	STATE DIST. NO.	COUNTY				
GL	14	WILLIAMSON	0151	05	072	248b

09:30:10
22 JUN 2001
I:\07401022\CNGORDER\PLOT\roadway\ponds\029248brw.dgn

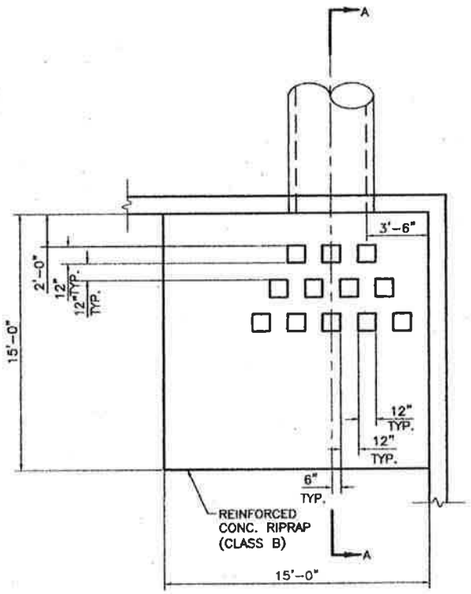

PLAN

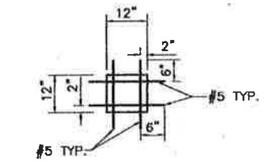

DISSIPATOR REBAR PLAN

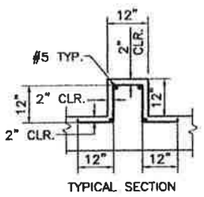

TYPICAL SECTION

DISSIPATOR DETAIL

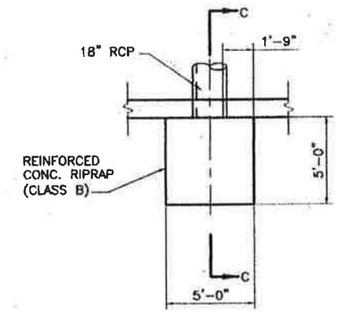

PLAN

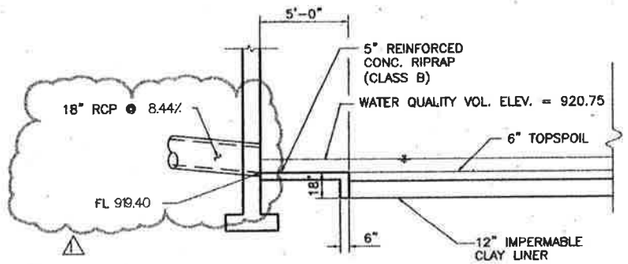

SECTION C-C

18" RCP OUTFALL

SCALE: 1/4" = 1'-0"

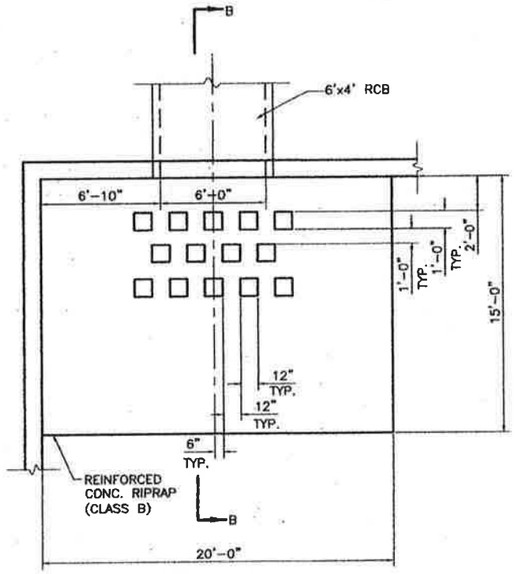

PLAN

6'x4' RCB OUTFALL

SCALE: 1/4" = 1'-0"

NOTES:

1. FOR SPLITTER BOX AND POND WALL REINFORCEMENT SEE WATER QUALITY PONDS STRUCTURAL DETAILS, SHTS. 261f & 261e, RESPECTIVELY.
2. FOR POND LAYOUT SEE SHT 248a.

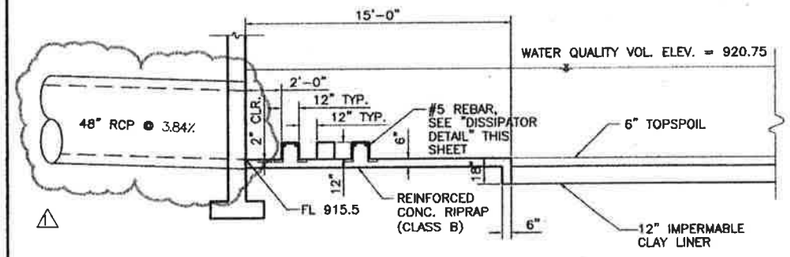

SECTION A-A

48" RCP OUTFALL

SCALE: 1/4" = 1'-0"

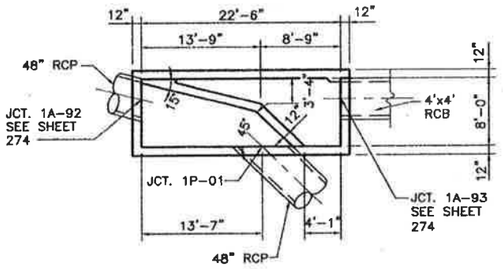

SPLITTER BOX DETAIL
LEFT SIDE

SCALE: 1" = 1/8"

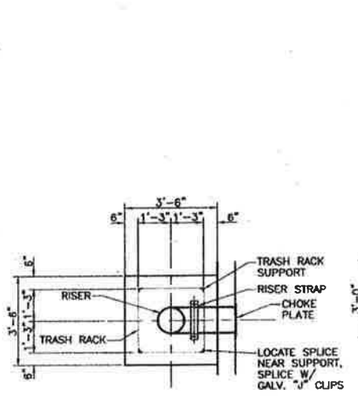

PLAN

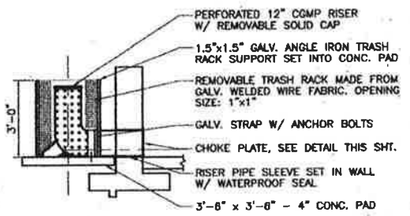

SECTION

RISER DETAIL
N.T.S

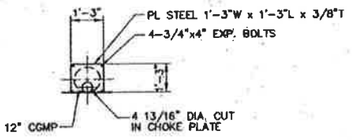

CHOKE PLATE DETAIL

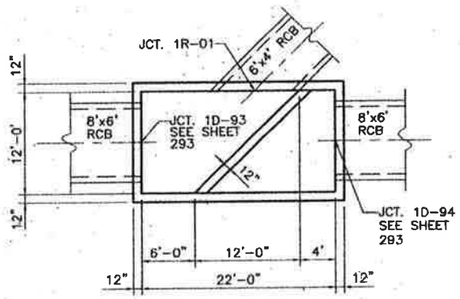

SPLITTER BOX DETAIL
RIGHT SIDE

SCALE: 1" = 1/8"

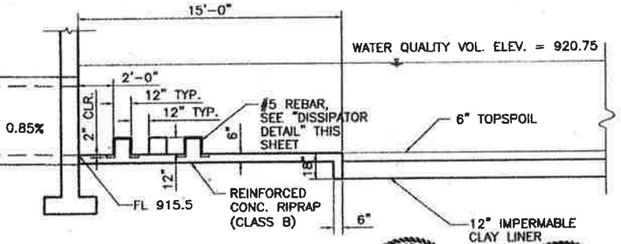

SECTION B-B

6'x4' RCB OUTFALL

SCALE: 1/4" = 1'-0"

STATE OF TEXAS — DAVID L. GARRETT — 76526 — REGISTERED PROFESSIONAL ENGINEER

STATE OF TEXAS — C.O. BILLS — 83877 — LICENSED PROFESSIONAL ENGINEER

For Revision #1 Only 6/22/01 C.O. Bills 5-3-99

NO.	DATE	REVISION	APPROV.
4			
3			
2			
1	6/01	CHANGE ORDER 10	

Turner Collie & Braden Inc.
ENGINEERS • PLANNERS • PROJECT MANAGERS

AUSTIN | 72-07401-022

Texas Department of Transportation

620 MEDIAN POND DRAINAGE DETAILS

SCALE: AS NOTED

Checked	CDB		WORK	FEDERAL AID PROJECT NO.				
Checked	DLG	6	TEXAS	NH 99(556)				U.S. 183
Date	DWG	STATE DIST. NO.	COUNTY					
Checked	CDB	AUS	WILLIAMSON	0151	05	072		248c

08:34:44
22 JUN 2001
f:\07401022\CNCORDER\PLOT\roadway\ponds\0292485rw.dgn

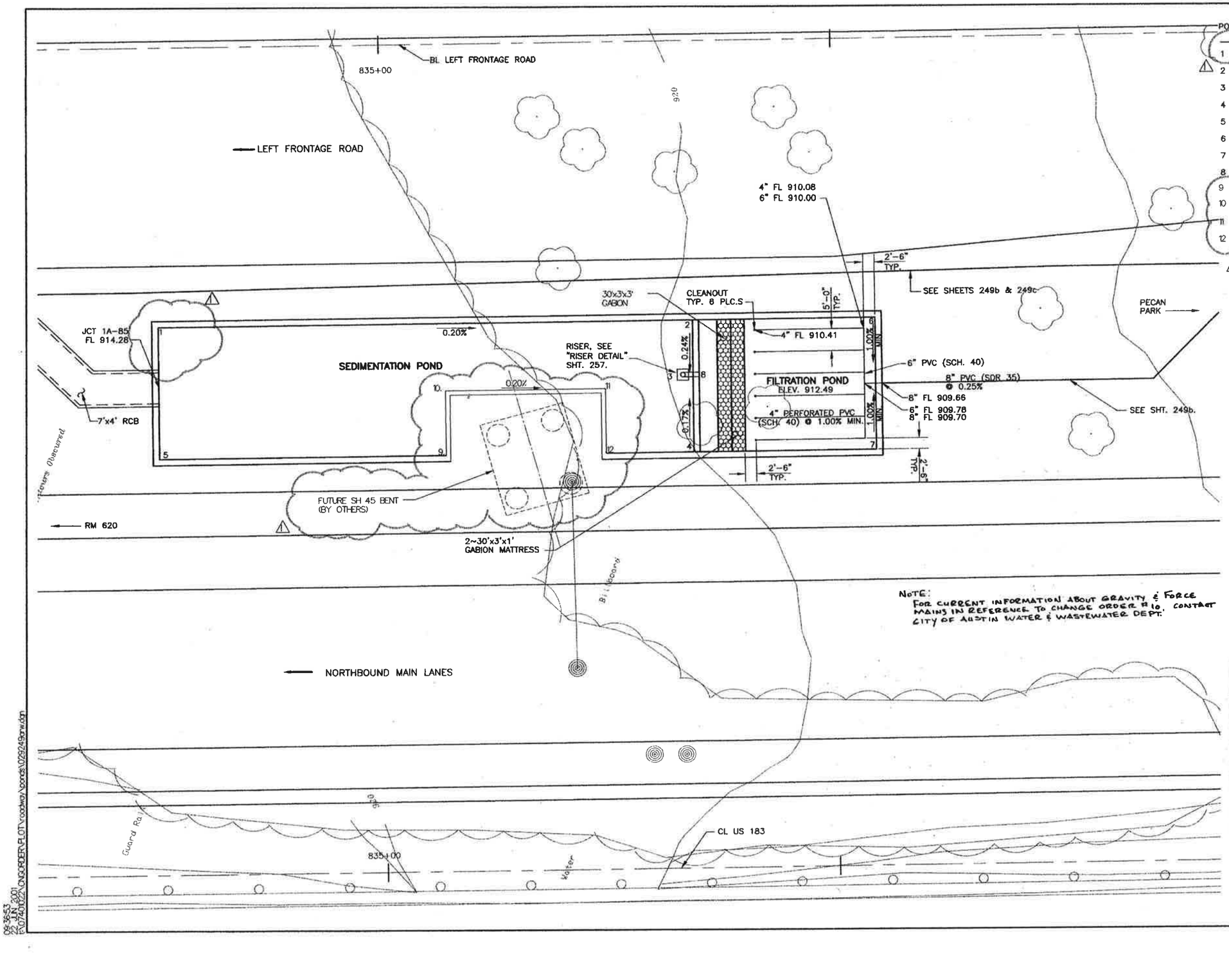

NOTE:
FOR CURRENT INFORMATION ABOUT GRAVITY & FORCE MAINS IN REFERENCE TO CHANGE ORDER #10, CONTACT CITY OF AUSTIN WATER & WASTEWATER DEPT.

POINT LOCATION TABLE

POINT No.	STATION BL LT. FRT. RD.	OFFSET	ELEV. FL
1	834+50.75	63.50' RT.	912.78
2	835+68.75	63.50' RT.	912.54
3	835+66.50	75.92' RT.	912.51
4	835+68.75	93.50' RT.	912.54
5	834+50.75	93.50' RT.	912.78
6	836+09.08	63.50' RT.	912.49
7	836+09.08	93.50' RT.	912.49
8	835+70.08	75.92' RT.	912.49
9	835+13.94	93.50'RT	
10	835+13.94	78.80'RT	
11	835+49.38	78.80'RT	
12	835+49.38	93.50'RT	

STATE OF TEXAS REBECCA A. BILLS 82587 REGISTERED PROFESSIONAL ENGINEER

Rebecca A. Bills
5-3-99

NOTES:

1. SEE WATER QUALITY POND STRUCTURAL DETAILS SHEETS 261a–261d FOR POND DIMENSIONS AND REINFORCEMENT.
2. SEE STORM SEWER PROFILE SHEET 275 FOR FLOWLINES OF RCPs/RCBs AT SPLITTER BOX.
3. SEE WATER QUALITY POND TYPICAL SECTION AND DETAILS SHEET 257 FOR FILTRATION POND DETAILS.

STATE OF TEXAS DAVID L. GARRETT 76626 REGISTERED PROFESSIONAL ENGINEER

6/22/01
For Revision #1 Only

NO.	DATE	REVISION	APPROV.
4			
3			
2			
1	6/01	CHANGE ORDER 10	

Turner Collie & Braden Inc.
ENGINEERS • PLANNERS • PROJECT MANAGERS

AUSTIN | 72-07401-022

Texas Department of Transportation

LAKECREEK (1A) UNDERGROUND WATER QUALITY POND LAYOUT

SCALE: 1"=10'

CH		SCOTT	FEDERAL AID PROJECT NO.			
GL	8	TEXAS	NH 99(556)			U.S.183
RP	STATE DIST.NO.	COUNTY				
DLG	14	WILLIAMSON	0151	05	072	249a

09-36-53
22 JUN 2001
F:\07401022\CNGORDER\PLOT\roadway\ponds\029249arw.dgn

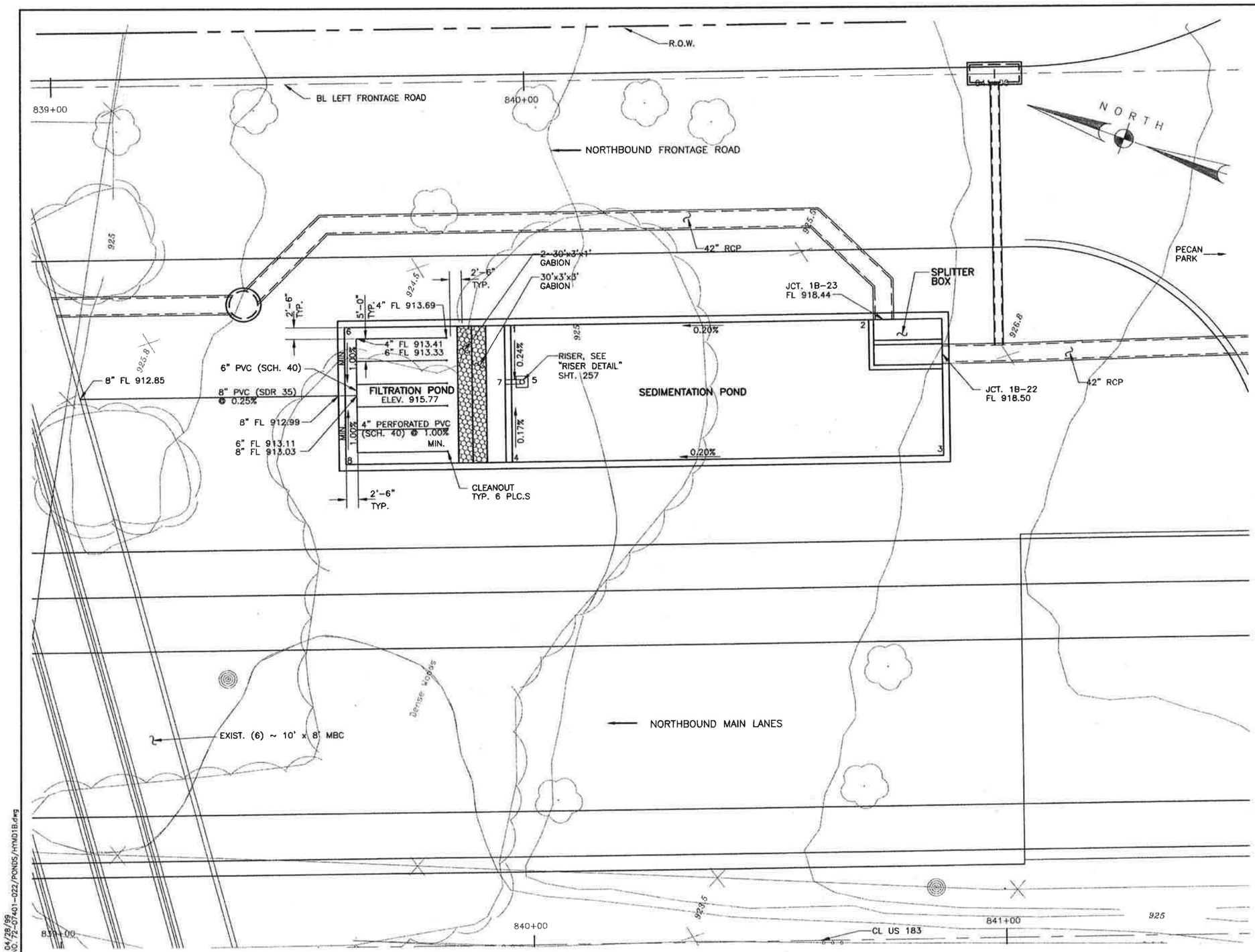

POINT LOCATION TABLE

POINT No.	STATION BL LT. FRT. RD.	OFFSET	ELEV. FL
1	839+96.50	52.75' RT.	915.82
2	840+72.50	52.75' RT.	915.97
3	840+88.00	82.75' RT.	916.00
4	839+96.50	82.75' RT.	915.82
5	839+98.75	65.17' RT.	915.79
6	839+61.17	52.75' RT.	915.77
7	839+95.17	65.17' RT.	915.77
8	839+61.17	82.75' RT.	915.77

NOTE:
FOR CURRENT INFORMATION ABOUT GRAVITY & FORCE MAINS, IN REFERENCE TO CHANGE ORDER # 10, CONTACT CITY OF AUSTIN WATER & WASTEWATER DEPT

NOTES:

1. SEE WATER QUALITY POND STRUCTURAL DETAILS SHEETS 261a – 261b FOR POND DIMENSIONS AND REINFORCEMENT.
2. SEE STORM SEWER PROFILE SHEETS FOR FLOWLINES OF RCPs/RCBs AT SPLITTER BOX, SHT. 275.
3. SEE WATER QUALITY POND TYPICAL SECTIONS AND DETAILS SHEET 257 FOR FILTRATION POND DETAILS.

STATE OF TEXAS
REBECCA A. BELL
82587
LICENSED PROFESSIONAL ENGINEER
Rebecca A. Bell
5-8-99

Turner Collie & Braden Inc.
ENGINEERS • PLANNERS • PROJECT MANAGERS

AUSTIN | 72-07401-022

Texas Department of Transportation

LAKECREEK (1B) UNDERGROUND WATER QUALITY POND LAYOUT

SCALE: 1"=10'

Designed	RAB		STATE	FEDERAL AID PROJECT NO.			
Detailed	DLO		TEXAS	NH 99(556)			U.S.183
Checked	GWS	STATE DIST.NO.	COUNTY				
Drawn	DLO	14	WILLIAMSON	0151	05	072	250
Checked	DLO						

DATE: 04/28/99
JOB NO. 72-07401-022/PONDS/HYMD1B.dwg

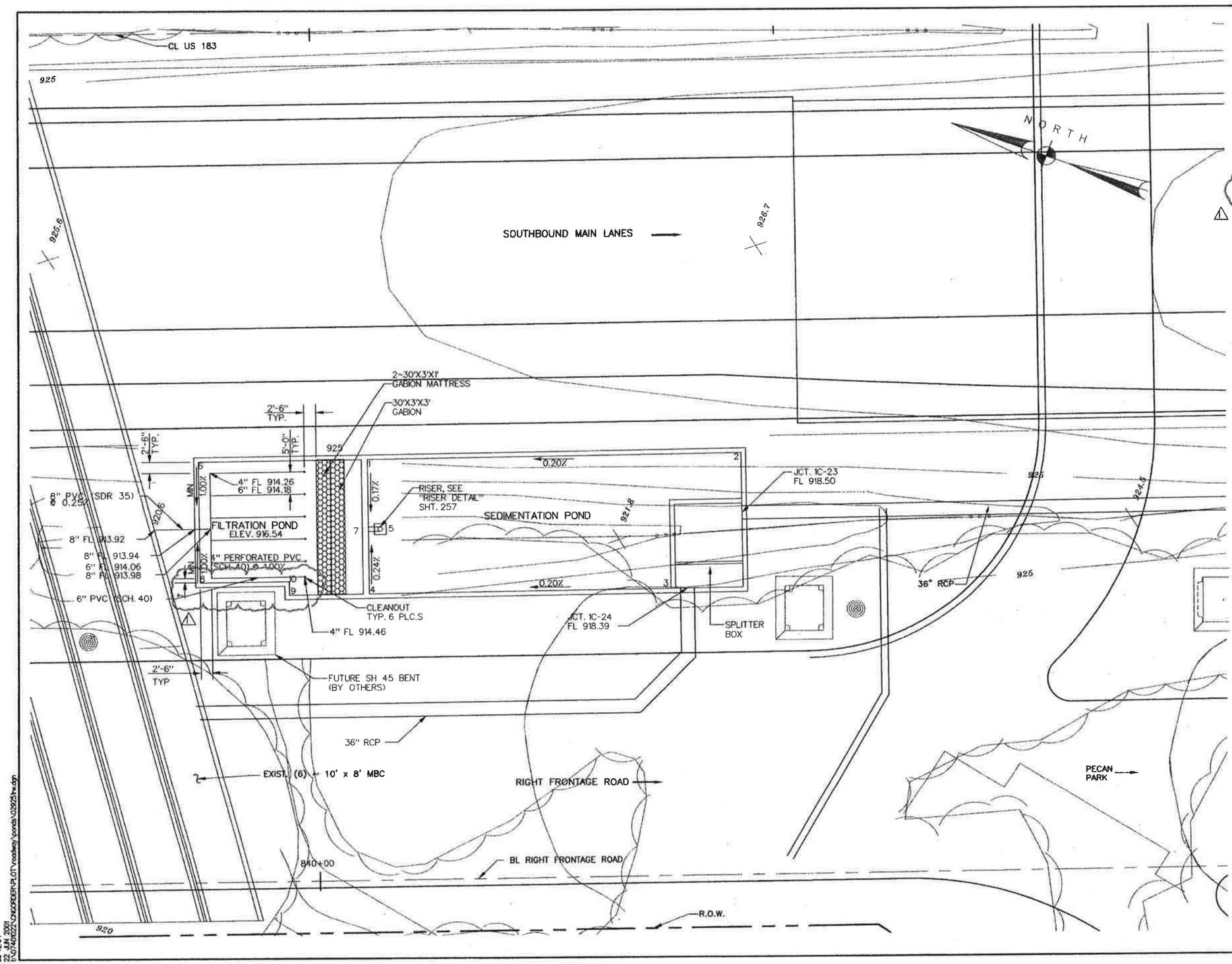

POINT LOCATION TABLE

POINT No.	STATION CL RT. FRT. RD.	OFFSET	ELEV. FL
1	840+11.50	93.75'LT	916.59
2	840+92.00	93.75'LT	916.75
3	840+76.50	63.75'LT	916.72
4	840+11.50	63.75'LT	916.54
5	840+13.75	76.17'LT	916.56
6	839+75.17	93.75'LT	916.54
7	840+10.17	76.17'LT	916.54
8	839+75.17	66.75'LT	916.54
9	839+94.35	63.75'LT	916.54
10	839+94.21	66.79'LT	916.54

NOTE: FOR CURRENT INFORMATION ON GRAVITY & FORCE MAINS IN REFERENCE TO CHANGE ORDER #10, CONTACT CITY OF AUSTIN WATER & WASTEWATER DEPT.

STATE OF TEXAS
DAVID L. GARRETT
76626
REGISTERED PROFESSIONAL ENGINEER

6/22/01
For Revision #1 Only

NOTES:

1. SEE WATER QUALITY POND STRUCTURAL DETAILS SHEETS 261a – 261b FOR POND DIMENSIONS AND REINFORCEMENT.
2. SEE STORM SEWER PROFILE SHEETS 294 FOR FLOWLINES OF RCPs/RCBs AT SPLITTER BOX.
3. SEE WATER QUALITY POND TYPICAL SECTIONS AND DETAILS SHEET 257 FOR FILTRATION POND DETAILS.

STATE OF TEXAS
REBECCA A. HILLS
82587
REGISTERED PROFESSIONAL ENGINEER

6-3-01

NO.	DATE	REVISION	APPROV
4			
3			
2			
1	6/01	CHANGE ORDER 10	

Turner Collie & Braden Inc.
ENGINEERS • PLANNERS • PROJECT MANAGERS

AUSTIN | 72-07401-022

Texas Department of Transportation

LAKECREEK (1C) UNDERGROUND WATER QUALITY POND LAYOUT

SCALE: 1"=10'

CH	DLG	8	TEXAS	NH 99(556)			U.S.183
RP	DLG	14	WILLIAMSON	0181	05	072	251

094504
RZ_M1001
P:\07401022\CNGORDER\PLOT\roadway\conds\02923fm.dgn

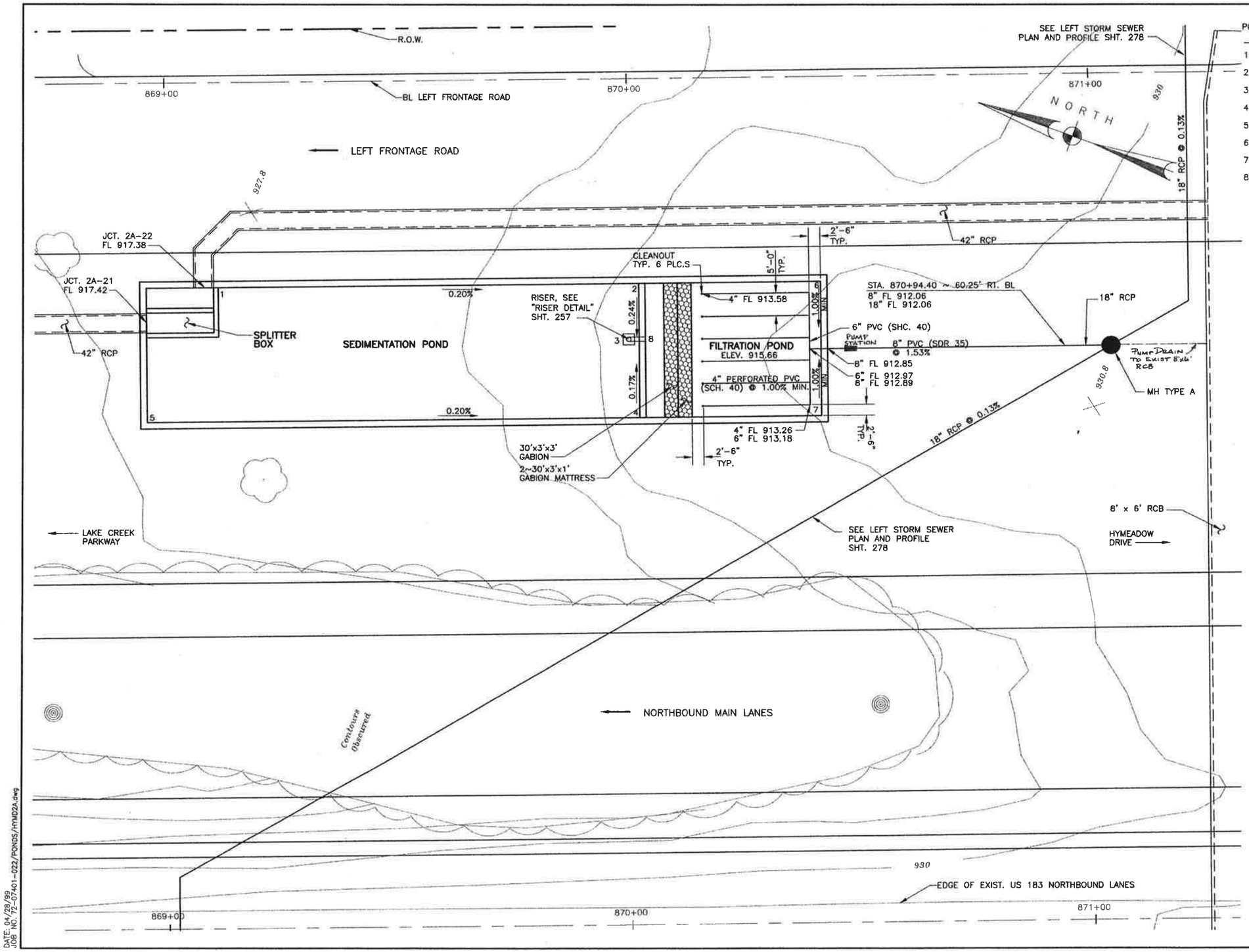

DATE: 04/28/99
JOB NO. 72-07401-022/PONDS/HYMD2A.dwg

POINT LOCATION TABLE

POINT No.	STATION BL LT. FRT. RD.	OFFSET	ELEV. FL
1	869+11.25	45.25' RT.	915.89
2	870+02.25	45.25' RT.	915.71
3	870+00.00	57.67' RT.	915.68
4	870+02.25	75.25' RT.	915.71
5	868+95.75	75.25' RT.	915.92
6	870+41.58	45.25' RT.	915.66
7	870+41.58	75.25' RT.	915.66
8	870+03.58	57.67' RT.	915.66

NOTE:
FOR CURRENT INFORMATION ON GRAVITY & FORCE MAINS IN REFERENCE TO CHANGE ORDER #10, CONTACT CITY OF AUSTIN WATER & WASTEWATER DEPT.

PUMP STATION
TOP ELEV = 932.24
BOT. ELEV = 910.06
FL IN = 912.06
FL OUT = 919.12
C.O. #18

NOTES:

1. SEE WATER QUALITY POND STRUCTURAL DETAILS SHEETS 261a – 261d FOR POND DIMENSIONS AND REINFORCEMENT.
2. SEE STORM SEWER PROFILE SHEET 279 FOR FLOWLINES OF RCPs/RCBs AT SPLITTER BOX.
3. SEE WATER QUALITY POND TYPICAL SECTIONS AND DETAILS, SHEET 257 FOR FILTRATION POND DETAILS.

STATE OF TEXAS
REBECCA A. BILLS
82587
REGISTERED PROFESSIONAL ENGINEER

Rebecca A. Bills
5-3-99

Turner Collie & Braden Inc.
ENGINEERS • PLANNERS • PROJECT MANAGERS

AUSTIN | 72-07401-022

Texas Department of Transportation

HYMEADOW (2A) UNDERGROUND WATER QUALITY POND LAYOUT

SCALE: 1"=10'

Designed	RAB		STATE	FEDERAL AID PROJECT NO.			
Detailed	CDB	6	TEXAS	NH 99(556)			U.S.183
Checked	GWS	STATE DIST.NO.	COUNTY				
Quantities	DLO	14	WILLIAMSON	0151	05	072	252

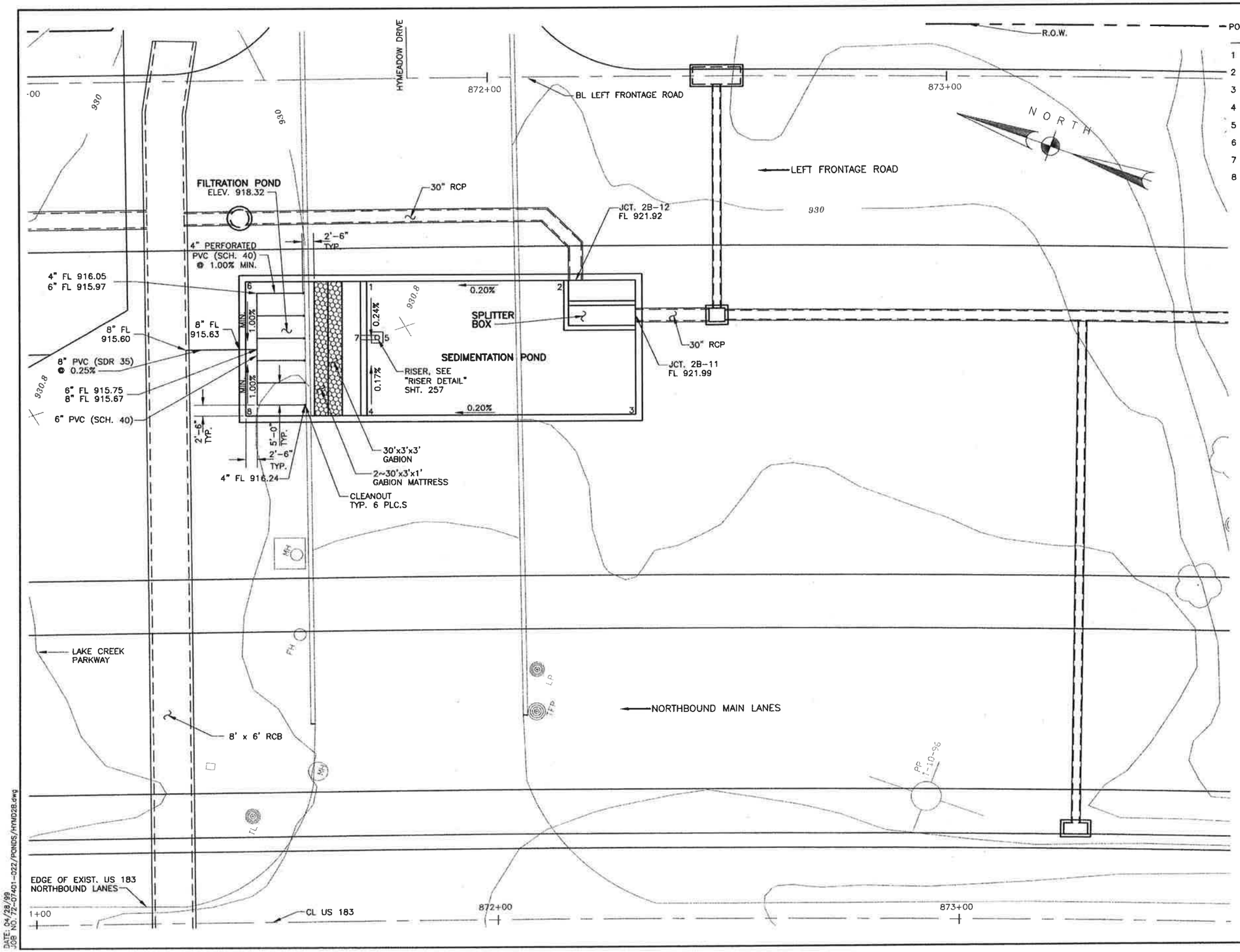

POINT LOCATION TABLE

POINT No.	STATION BL LT. FRT. RD.	OFFSET	ELEV. FL
1	871+73.10	44.96' RT.	918.37
2	872+16.43	45.23' RT.	918.46
3	872+32.05	75.25' RT.	918.49
4	871+72.80	74.96' RT.	918.37
5	871+75.24	57.40' RT.	918.34
6	871+46.72	44.68' RT.	918.32
7	871+71.62	57.36' RT.	918.32
8	871+46.40	74.67' RT.	918.32

NOTE:
FOR CURRENT INFORMATION ON GRAVITY & FORCE MAINS IN REFERENCE TO CHANGE ORDER #10, CONTACT CITY OF AUSTIN WATER & WASTEWATER DEPT.

NOTES:

1. SEE WATER QUALITY POND STRUCTURAL DETAILS SHEETS 261a – 261d FOR POND DIMENSIONS AND REINFORCEMENT.
2. SEE STORM SEWER PROFILE SHEETS 279 FOR FLOWLINES OF RCPs/RCBs AT SPLITTER BOX.
3. SEE WATER QUALITY POND TYPICAL SECTIONS AND DETAILS, SHEET 257 FOR FILTRATION POND DETAILS.

STATE OF TEXAS
REBECCA A. BILLS
82587
REGISTERED
PROFESSIONAL ENGINEER
Rebecca A. Bills
5-3-99

Turner Collie & Braden Inc.
ENGINEERS • PLANNERS • PROJECT MANAGERS

AUSTIN | 72-07401-022

Texas Department of Transportation

HYMEADOW (2B) UNDERGROUND WATER QUALITY POND LAYOUT

SCALE: 1"=10'

Designed	RAB		STATE	FEDERAL AID PROJECT NO.				SHEET NO.
Checked	CDB	6	TEXAS	NH 98(556)				U.S.183
Drawn	GWS	STATE DIST.NO.	COUNTY	CONTROL NO.	SECTION NO.	JOB NO.		SHEET NO.
Checked	DLG	14	WILLIAMSON	0151	05	072		253

DATE: 04/28/99
JOB NO. 72-07401-022/PONDS/HYMD2B.dwg

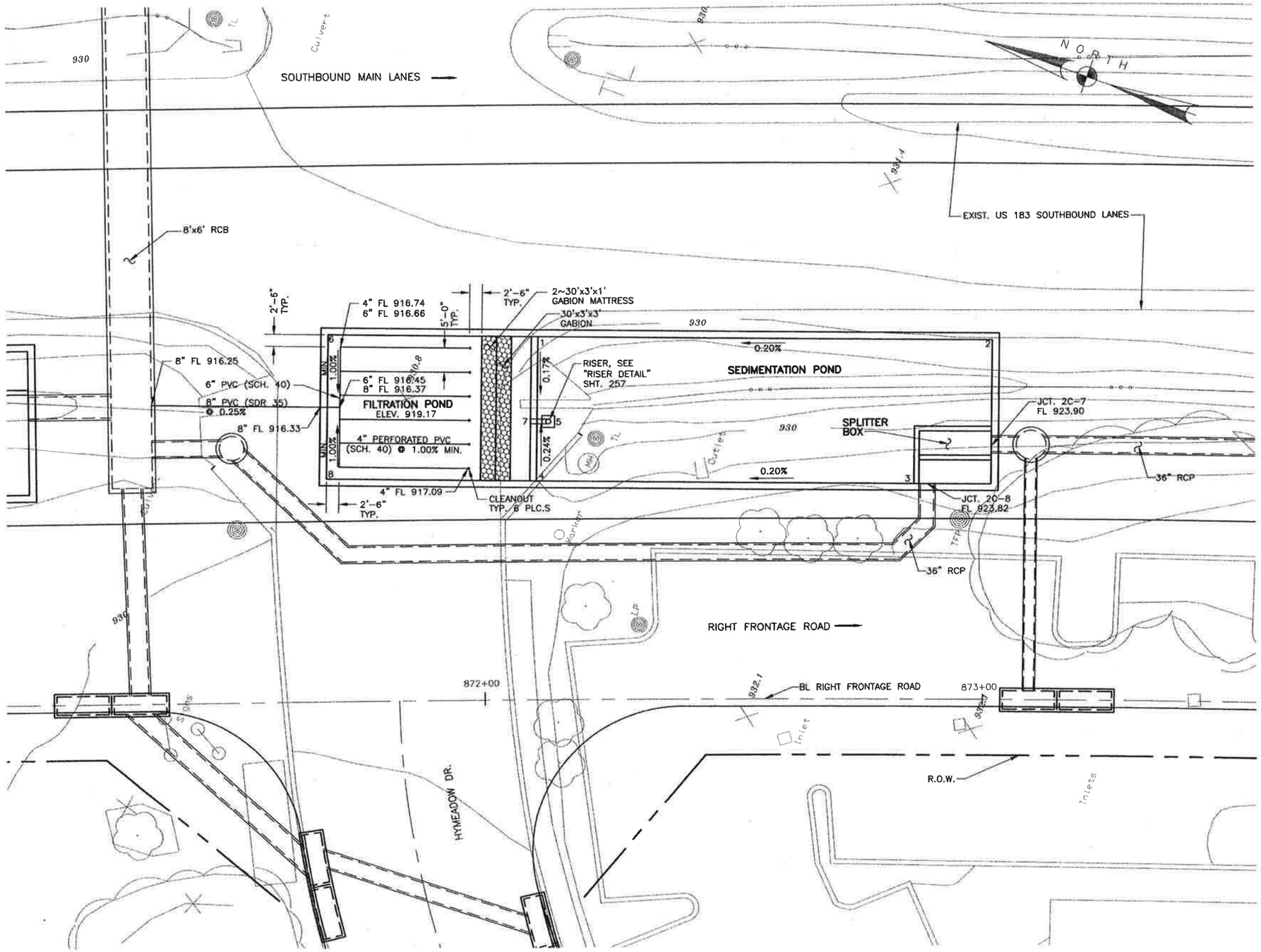

POINT LOCATION TABLE

POINT No.	STATION BL RT. FRT. RD.	OFFSET	ELEV. FL
1	872+11.06	75.49' LT.	919.22
2	873+01.34	74.73' LT.	919.40
3	872+85.95	45.76' LT.	919.37
4	872+10.57	45.49' LT.	919.22
5	872+13.00	57.87' LT.	919.19
6	871+69.31	76.34' LT.	919.17
7	872+09.46	57.93' LT.	919.17
8	871+68.59	46.35' LT.	919.17

NOTE:
FOR CURRENT INFORMATION ON GRAVITY & FORCE MAINS IN REFERENCE TO CHANGE ORDER #10, CONTACT CITY OF AUSTIN WATER & WASTEWATER DEPT.

NOTES:

1. SEE WATER QUALITY POND STRUCTURAL DETAILS SHEETS 261a – 261d FOR POND DIMENSIONS AND REINFORCEMENT.
2. SEE STORM SEWER PROFILE SHEETS 298 FOR FLOWLINES OF RCPs/RCBs AT SPLITTER BOX.
3. SEE WATER QUALITY POND TYPICAL SECTIONS AND DETAILS, SHEET 257 FOR FILTRATION POND DETAILS.

STATE OF TEXAS
REBECCA A. BILL
92557
REGISTERED PROFESSIONAL ENGINEER

Rebecca A. Bill
5-3-99

Turner Collie & Braden Inc.
ENGINEERS • PLANNERS • PROJECT MANAGERS

AUSTIN | 72-07401-022

Texas Department of Transportation

HYMEADOW (2C) UNDERGROUND WATER QUALITY POND LAYOUT

SCALE: 1"=10'

RAB		STATE	FEDERAL AID PROJECT NO.				
CDB		TEXAS	NH 99(556)				U.S.183
CWS	STATE DIST. NO.	COUNTY	CONTROL NO.	SECTION NO.	JOB NO.	SHEET NO.	
DLG	14	WILLIAMSON	0151	05	072		254

DATE: 04/28/99
JOB NO. 72-07401-022/PONDS/HYMD2C.dwg

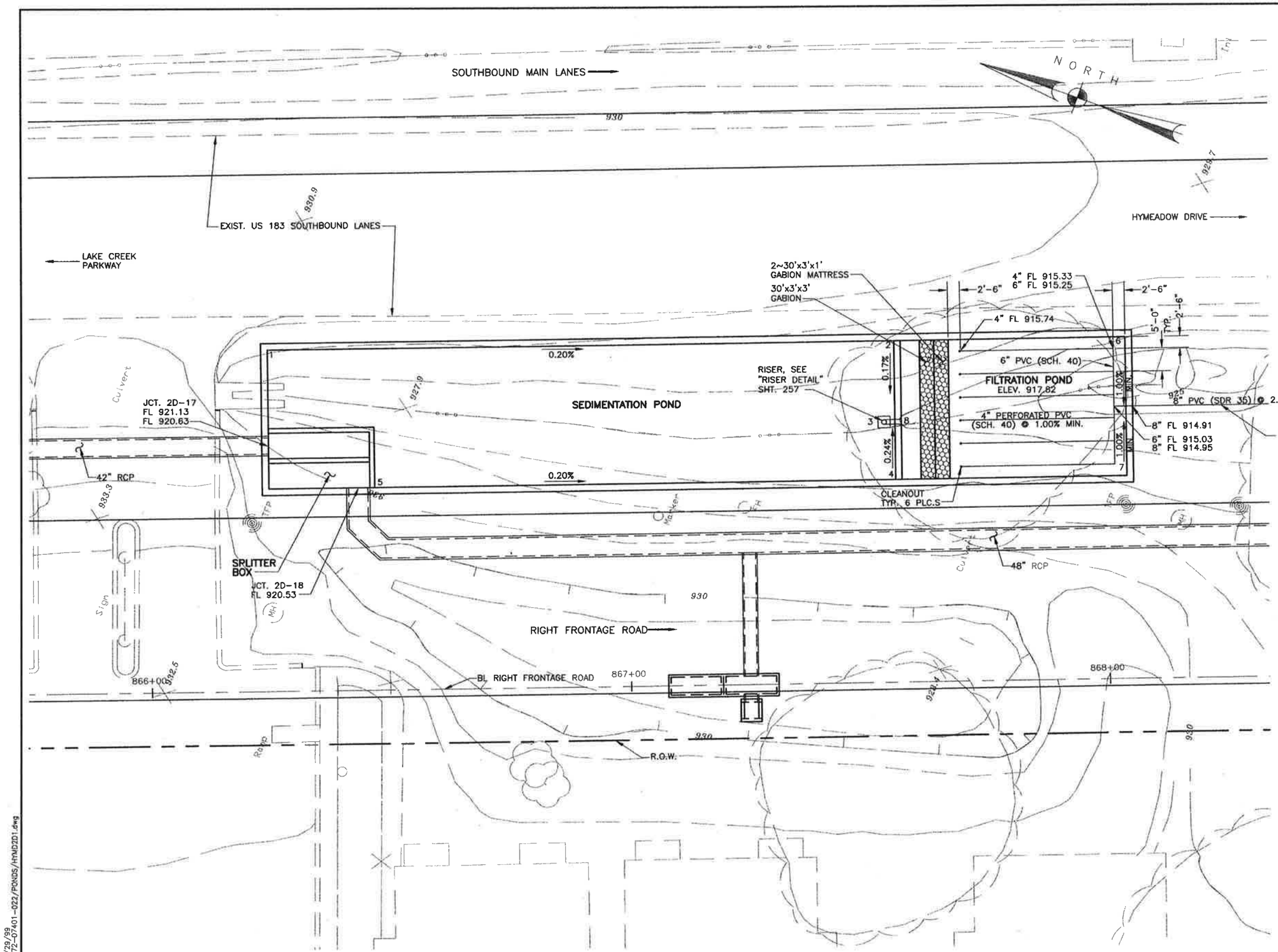

POINT LOCATION TABLE

POINT No.	STATION BL RT. FRT. RD.	OFFSET	ELEV. FL
1	866+24.75	73.75' LT.	918.13
2	867+55.75	73.75' LT.	917.87
3	867+53.50	56.17' LT.	917.84
4	867+55.75	43.75' LT.	917.87
5	866+46.75	43.75' LT.	918.07
6	868+04.08	73.75' LT.	917.82
7	868+04.08	43.75' LT.	917.82
8	867+57.08	56.17' LT.	917.82

NOTE:
FOR CURRENT INFORMATION ABOUT GRAVITY & FORCE MAINS IN REFERENCE TO CHANGE ORDER #10, CONTACT CITY OF AUSTIN WATER & WASTEWATER DEPT

NOTES:

1. SEE WATER QUALITY POND STRUCTURAL DETAILS SHEETS 261a – 261d FOR POND DIMENSIONS AND REINFORCEMENT.
2. SEE STORM SEWER PROFILE SHEETS 298 FOR FLOWLINES OF RCPs/RCBs AT SPLITTER BOX.
3. SEE WATER QUALITY POND TYPICAL SECTIONS AND DETAILS, SHEET 257 FOR FILTRATION POND DETAILS.

STATE OF TEXAS
REBECCA A. BILLS
82587
REGISTERED PROFESSIONAL ENGINEER

Rebecca A. Bills 5-3-99

Turner Collie & Braden Inc.
ENGINEERS • PLANNERS • PROJECT MANAGERS

AUSTIN | 72-07401-022

Texas Department of Transportation

© 1999 TxDOT

HYMEADOW (2D1) UNDERGROUND WATER QUALITY POND LAYOUT

SCALE: 1"=10'

Designed	RAB		STATE	FEDERAL AID PROJECT NO.			SHEET NO.
Drawn	CDB	6	TEXAS	NH 99(556)			U.S.183
Checked	GWS	STATE DIST. NO.	COUNTY	CONTROL NO.	SECTION NO.	JOB NO.	SHEET NO.
Quantities	DLD	14	WILLIAMSON	0151	05	072	255

DATE: 04/29/99
JOB NO. 72-07401-022/PONDS/HYMD2D1.dwg

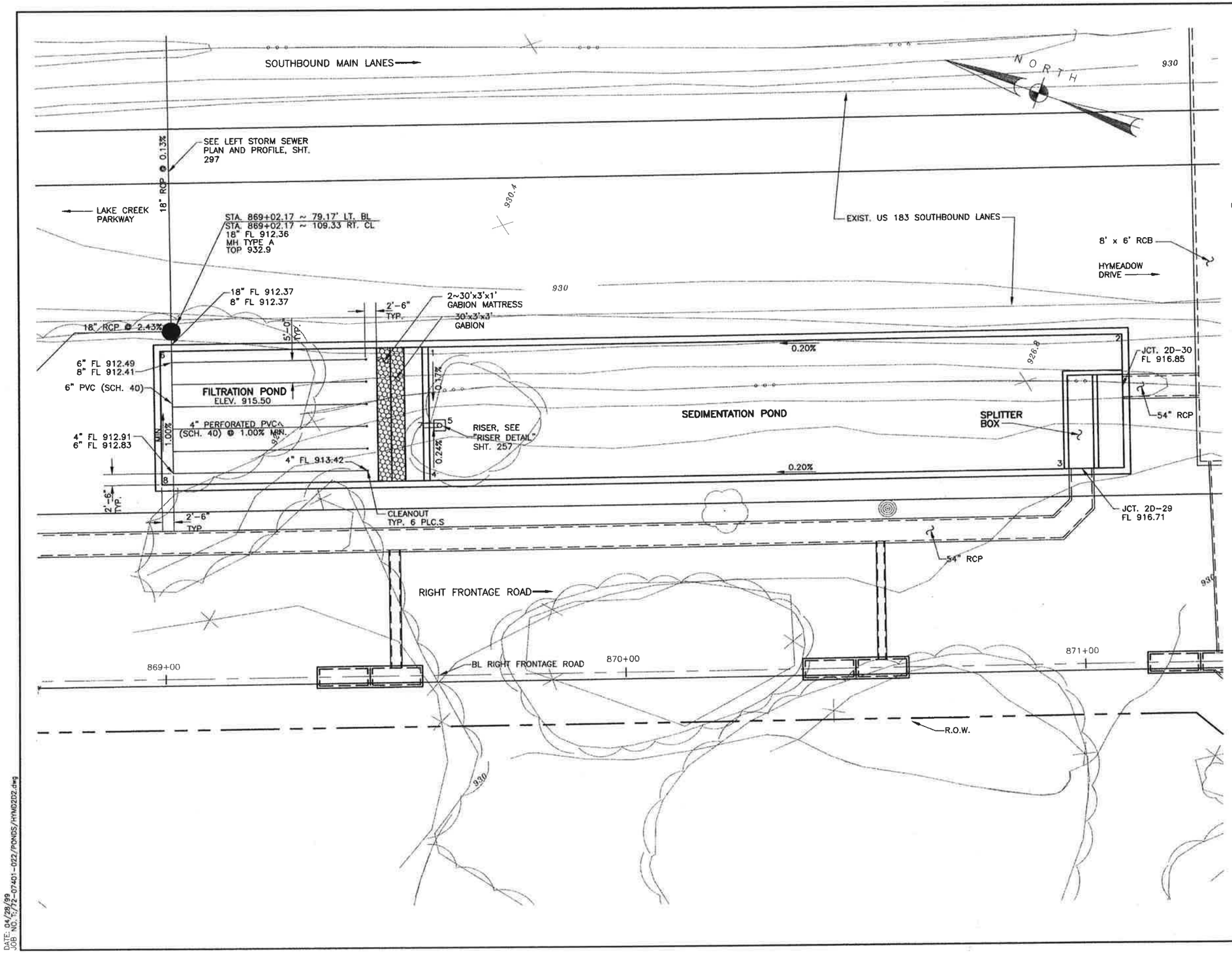

POINT LOCATION TABLE

POINT No.	STATION BL RT. FRT. RD.	OFFSET	ELEV. FL
1	869+58.00	73.75' LT.	915.55
2	871+09.01	73.75' LT.	915.85
3	870+96.00	43.75' LT.	915.82
4	869+58.00	43.75' LT.	915.55
5	869+60.25	56.17' LT.	915.52
6	868+99.67	73.75' LT.	915.50
7	869+46.67	56.17' LT.	915.50
8	868+99.67	43.75' LT.	915.50

NOTE:
FOR CURRENT INFORMATION ABOUT GRAVITY & FORCE MAINS IN REFERENCE TO CHANGE ORDER #10, CONTACT CITY OF AUSTIN WATER & WASTEWATER DEPT.

NOTES:

1. SEE WATER QUALITY POND STRUCTURAL DETAILS SHEETS 261a – 261d FOR POND DIMENSIONS AND REINFORCEMENT.
2. SEE STORM SEWER PROFILE SHEET 298 FOR FLOWLINES OF RCPs/RCBs AT SPLITTER BOX.
3. SEE WATER QUALITY POND TYPICAL SECTIONS AND DETAILS, SHEET 257 FOR FILTRATION POND DETAILS.

STATE OF TEXAS
REBECCA A. BILLS
82587
REGISTERED PROFESSIONAL ENGINEER
Rebecca A. Bills
5-5-99

Turner Collie & Braden Inc.
ENGINEERS • PLANNERS • PROJECT MANAGERS

AUSTIN | 72-07401-022

Texas Department of Transportation

HYMEADOW (2D2)
WATER QUALITY POND LAYOUT

SCALE: 1"=10'

RAB		STATE	FEDERAL AID PROJECT NO.				
CDB	6	TEXAS	NH 99(556)				U.S.183
GWS	STATE DIST. NO.	COUNTY					
DLC	14	WILLIAMSON	0151	05	072		256

DATE: 04/28/99
JOB NO.: 72-07401-022/PONDS/HYMD2D2.dwg

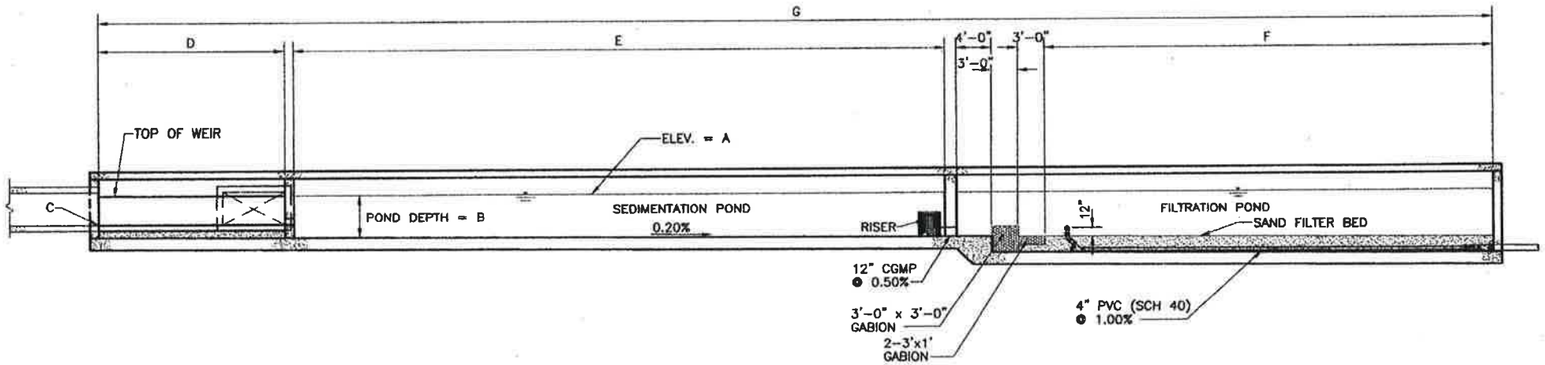

TYPICAL SECTION
SCALE: 1/8" = 1'-0"

POND	A	B	C	D ⚠1	E	F	G	H	I ⚠1	J
1A	917.78	5'-0"	914.28	N/A	96'-0"	29'-0"	158'-4"	18'-0"	N/A	2 3/8"
1B	921.00	5'-0"	918.50	14'-6"	76'-0"	24'-0"	126'-10"	10'-0" ⚠1	2'-6"	2 3/16"
1C	922.75	6'-0"	918.50	14'-6"	65'-0"	25'-0"	116'-10"	8'-9"	1'-9"	2 1/8"
2A	920.92	5'-0"	917.42	14'-6"	91'-0"	28'-0"	145'-10"	10'-0"	1'-6"	2 3/16"
2B	923.49	5'-0"	921.99	14'-6"	43'-0"	15'-0"	84'-10"	10'-0"	3'-6"	1 11/16"
2C	925.90	6'-6"	923.90	14'-6"	76'-0"	31'-0"	133'-10"	10'-0"	4'-6"	1 15/16"
2D1	923.63	5'-6"	920.63	21'-0"	109'-0"	37'-0"	179'-4"	12'-0"	2'-6"	2 5/8"
2D2	921.85	6'-0"	916.85	12'-0"	138'-0"	47'-0"	209'-3"	21'-0"	1'-0"	2 7/8"

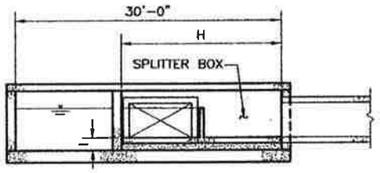

TYPICAL SECTION
SCALE: 1/8" = 1'-0"

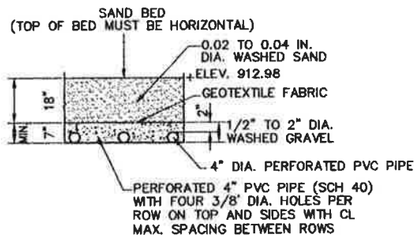

SAND FILTRATION BED SECTION
SCALE: 1/2" = 1'-0"

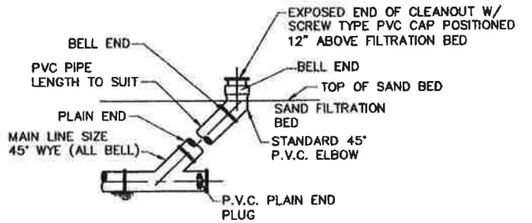

NOTE:
TO BE PLACED ON BEDDING MEETING SPECIFICATION FOR TYPE AND SIZE OF PIPE.

FILTRATION BED CLEAN-OUT
SCALE: 1/2" = 1'-0"

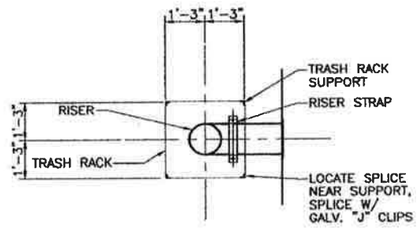

PLAN

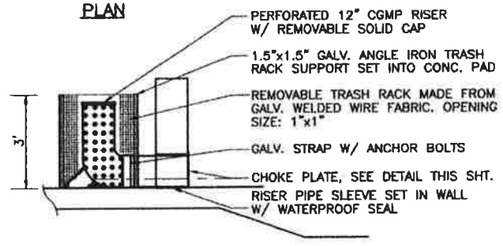

SECTION

RISER DETAIL
N.T.S.

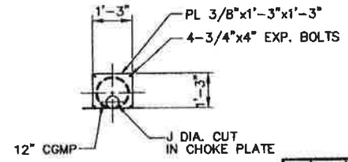

CHOKE PLATE DETAIL

STATE OF TEXAS
DAVID L. GARRETT
76626
REGISTERED PROFESSIONAL ENGINEER
6/22/01
For Revision #1 Only

STATE OF TEXAS
REBECCA A. BILLS
82587
REGISTERED PROFESSIONAL ENGINEER
Rebecca A. Bills
5-3-99

NOTES:

1. SEE WATER QUALITY PONDS STRUCTURAL DETAILS SHEETS 261a – 261d FOR POND DIMENSIONS AND REINFORCEMENT.
2. SEE STORM SEWER PROFILE SHEETS FOR FLOWLINES OF RCPs/RCBs AT SPLITTER BOX.

NO.	DATE	REVISION	APPROV.
4			
3			
2			
⚠1	6/01	CHANGE ORDER 10	

Turner Collie & Braden Inc.
ENGINEERS • PLANNERS • PROJECT MANAGERS

AUSTIN — Job No. 72-07401-022

Texas Department of Transportation

UNDERGROUND WATER QUALITY POND TYPICAL SECTIONS AND DETAILS

SCALE: AS NOTED

CH			FEDERAL AID PROJECT NO.				
DLG	6	TEXAS	NH 90(558)				U.S.183
RP	STATE DIST. NO.	COUNTY					
GL	AUS	WILLIAMSON	0151	05	072	257	

09-4013
22-JAN-2001
K:\07401022\MICROPER-PLOT\roadway\sorts\092257rw.dgn

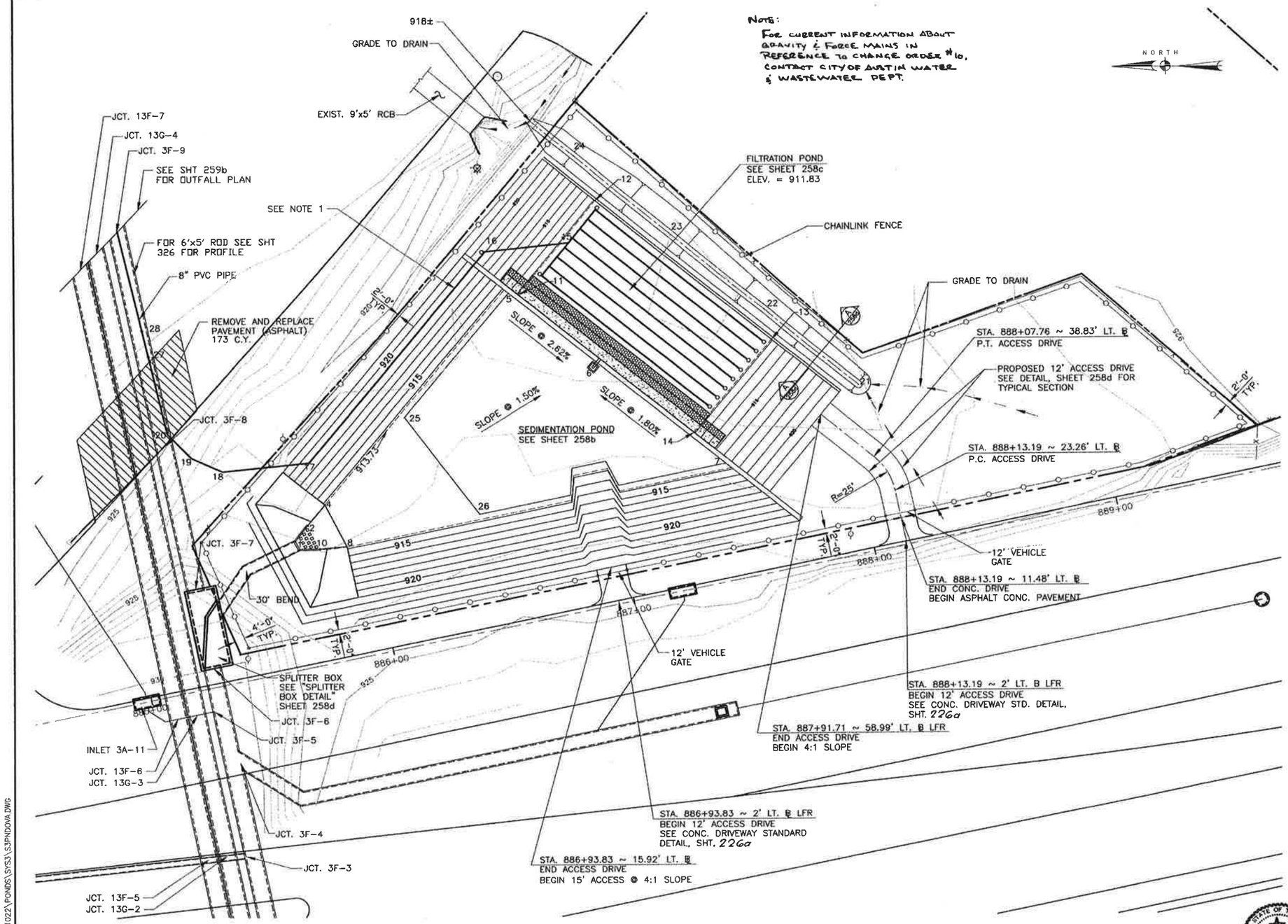

WATER QUALITY POND LAYOUT
SCALE: 1" = 20'

POINT LOCATION TABLE

POINT No.	STATION BL LT. FRT. RD.	OFFSET	ELEV. FL
SEDIMENTATION POND			
1	885+71.12	51.50' LT.	915.78
2	885+76.97	58.87' LT.	913.73
3	NOT USED		
4	885+85.48	65.75' LT.	913.67
5	886+76.65	137.14' LT.	913.00
6	887+04.05	99.54' LT.	911.84
7	887+48.23	48.95' LT.	913.00
8	885+90.56	46.85' LT.	913.67
9	NOT USED		
10	885+79.88	48.05' LT.	913.73
25	886+24.04	94.44' LT.	913.00
26	886+36.27	48.89' LT.	913.00
FILTRATION POND			
11	886+80.42	135.68' LT.	911.83
12	887+19.24	167.19' LT.	911.83
13	887+77.84	94.98' LT.	911.83
14	887+39.02	63.47' LT.	911.83
8in. PVC OUTFALL PIPE			
15	887+05.28	152.64' LT.	908.53
16	886+74.02	158.39' LT.	908.14
17	885+82.78	84.34' LT.	906.79
18	885+47.97	87.97' LT.	906.39
19	885+36.63	96.18' LT.	906.21
20	885+29.31	108.11' LT.	906.06
27	885+28.28	145.77' LT.	905.66
28	885+28.01	155.77' LT.	905.55
DRAINAGE DITCH			
21	898+07.92	69.82' LT.	920.00
22	897+76.81	108.94' LT.	919.75
23	897+45.69	148.08' LT.	919.50
24	897+14.56	187.23' LT.	919.25

NOTES:

1. CLEANOUTS SHALL BE PROVIDED EVERY 300 FT. AND AT BENDS.
2. PAVEMENT STRUCTURE SHALL BE DETERMINED BY ENGINEER.

STATE OF TEXAS
C. D. BILLS
83877
LICENSED PROFESSIONAL ENGINEER
5/11/99

Turner Collie & Braden Inc.
ENGINEERS • PLANNERS • PROJECT MANAGERS

AUSTIN | 72-07401-022

Texas Department of Transportation

POND SPRINGS
WATER QUALITY POND
LAYOUT

KKY/CDB		STATE	FEDERAL AID PROJECT NO.				
CDB	8	TEXAS	NH 99(056)				U.S.183
GWS	STATE DIST. NO.	COUNTY					
CDB	14	WILLIAMSON	0151	05	072		258a

DATE: 05/11/99
DB NO.: T:\72\07401022\PONDS\SYS3\S3PWDOVA.DWG

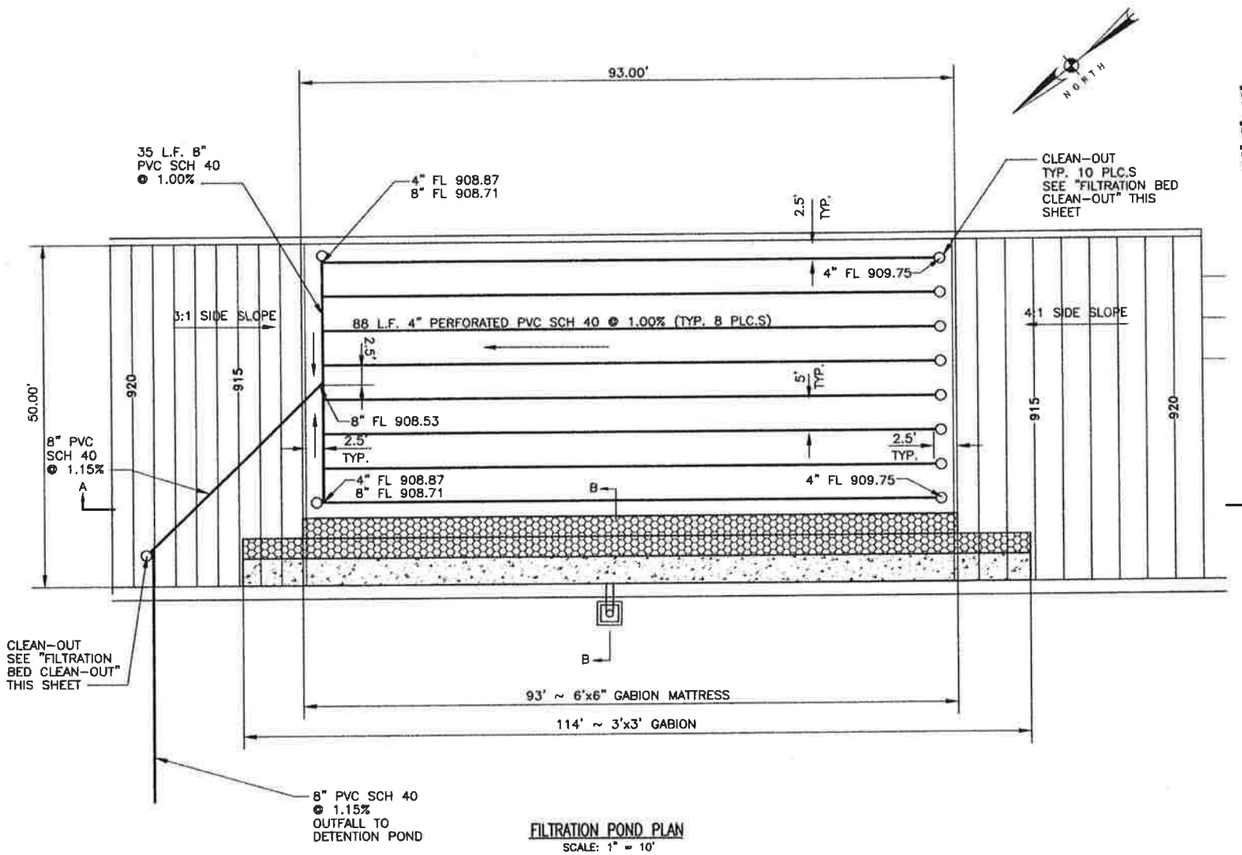

FILTRATION POND PLAN
SCALE: 1" = 10'

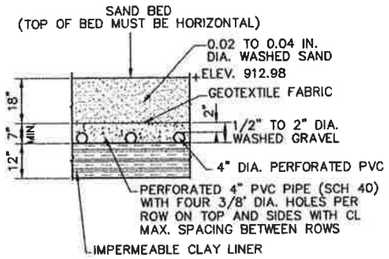

SAND FILTRATION BED SECTION
SCALE: 1/2" = 1'-0"

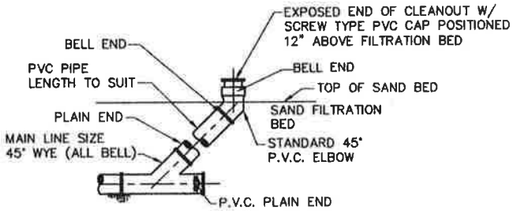

NOTE:
TO BE PLACED ON BEDDING MEETING SPECIFICATION FOR TYPE AND SIZE OF PIPE.

FILTRATION BED CLEAN-OUT
SCALE: 1/2" = 1'-0"

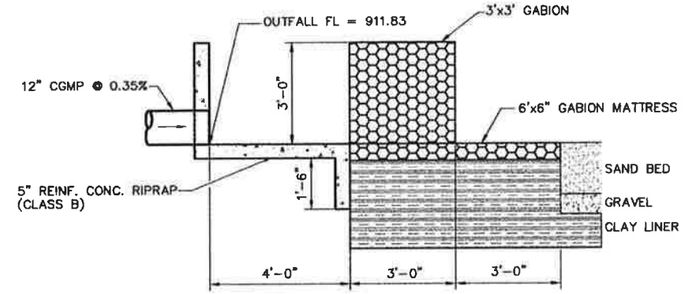

SECTION B-B
SCALE: 1/2" = 1'-0"

NOTES:
1.SEE WATER QUALITY PONDS STRUCTURAL DETAILS, SHT. 261i, FOR WALL DIMENSIONS AND REINFORCEMENT.

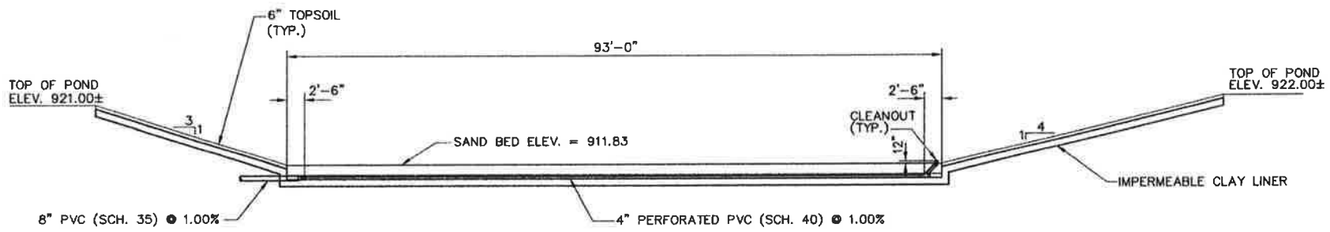

FILTRATION POND SECTION A-A
SCALE: 1" = 10'

STATE OF TEXAS
C. D. BILLS
83877
LICENSED
PROFESSIONAL ENGINEER
5-3-99

Turner Collie & Braden Inc.
ENGINEERS • PLANNERS • PROJECT MANAGERS

AUSTIN | 72-07401-022

Texas Department of Transportation

POND SPRINGS
FILTRATION POND
PLAN AND DETAILS

Checked: KKY/CDB	DIST.	STATE	FEDERAL AID PROJECT NO.				SHEET NO.
Checked: CDB	6	TEXAS	NH 99(556)				U.S.183
Drawn: GWS	STATE DIST. NO.	COUNTY	CONTROL NO.	SECTION NO.	JOB NO.		SHEET NO.
Checked: CDB	14	WILLIAMSON	0151	05	072		258c

DATE: 04/28/99
JOB NO.: Y:\07401022\PONDS\SYS31\S3PNDFIL.DWG

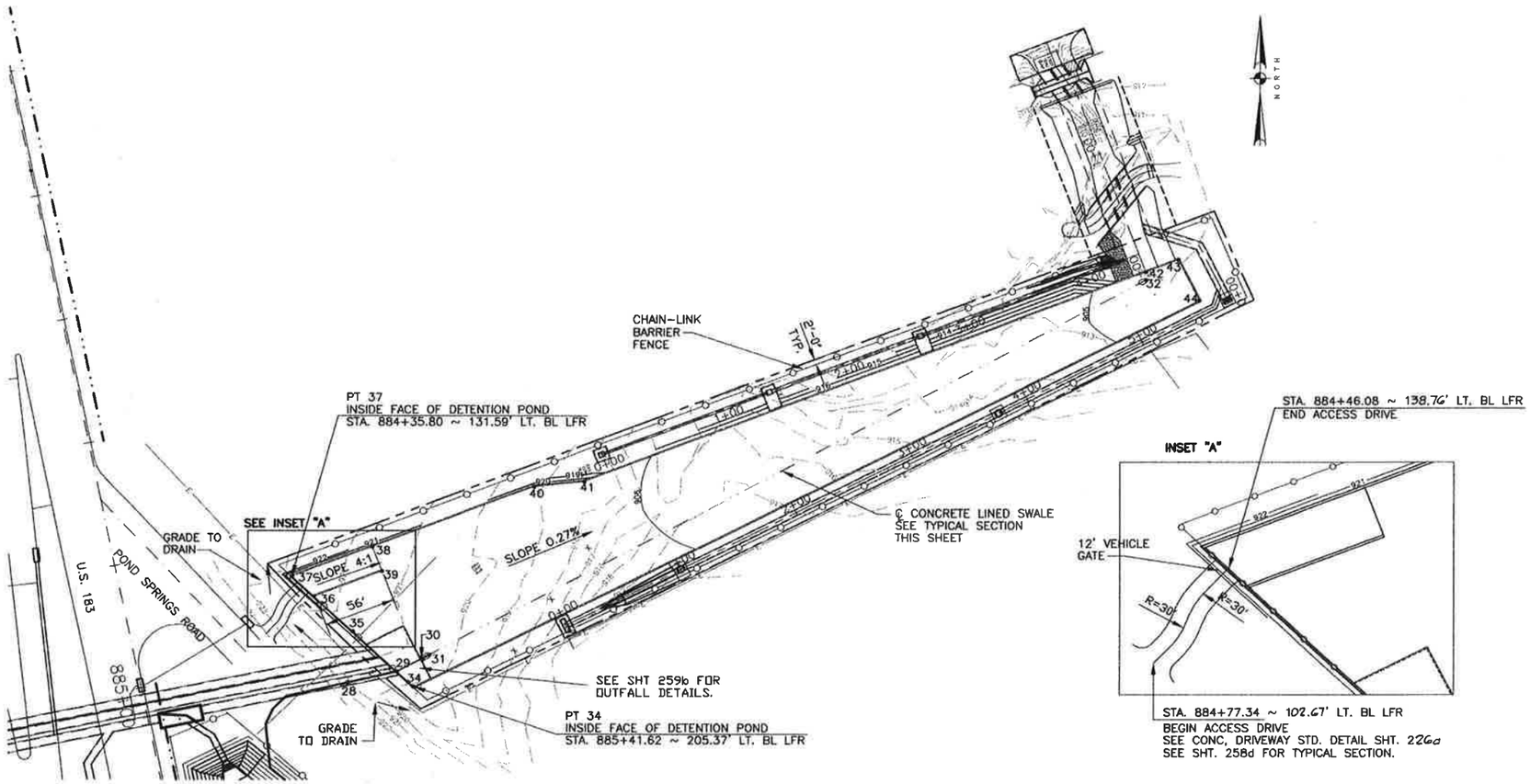

PLAN
SCALE: 1"=50'

POINT LOCATION TABLE

POINT No.	NORTH.	EAST.	ELEV. FL.
	8" PVC OUTFALL PIPE		
28	295,643.89	2,801,465.30	905.55
29	295,652.98	2,801,503.61	905.48
	CONCRETE-LINED SWALE		
30	295,662.98	2,801,522.15	905.44
31	295,666.34	2,801,528.38	905.43
32	295,965.42	2,802,082.86	904.80
	DETENTION POND		
34	295,640.69	2,801,516.64	906.67
35	295,684.96	2,801,469.73	906.65
36	296,713.23	2,801,439.76	906.76
37	295,729.22	2,801,422.81	921.50
38	295,752.92	2,801,484.50	906.62
39	295,733.32	2,801,492.03	906.62
40	295,800.96	2,801,609.50	906.26
41	295,805.05	2,801,648.29	906.15
42	295,971.95	2,802,082.61	904.80
43	295,981.53	2,802,107.55	904.85
44	295,949.06	2,802,124.03	904.89

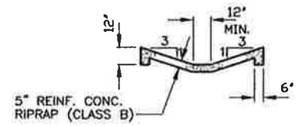

TYPICAL SECTION
CONCRETE LINED SWALE
NOT TO SCALE

NOTES:
1.SEE WATER QUALITY PONDS STRUCTURAL DETAILS, SHTS 261g-261i, FOR CONC. RETAINING WALL DETAILS.

STATE OF TEXAS
C. D. BILLS
83877
LICENSED
PROFESSIONAL ENGINEER
C.D. Bills
5-3-99

NOTE:
FOR CURRENT INFORMATION ABOUT GRAVITY & FORCE MAINS IN REFERENCE TO CHANGE ORDER #10, CONTACT CITY OF AUSTIN WATER & WASTEWATER DEPT.

Turner Collie & Braden Inc.
ENGINEERS • PLANNERS • PROJECT MANAGERS

AUSTIN | 72-07401-022

Texas Department of Transportation

POND SPRINGS
DETENTION POND

SCALE: AS NOTED

Designed	CDB	STATE	FEDERAL AID PROJECT NO.				
Drawn	RAB	TEXAS	NH 98(558)				U.S.183
Checked	GWS	STATE DIST.NO.	COUNTY				
Quantities	DLG	14	WILLIAMSON	0151	05	072	259a

DATE 04/28/99
JOB NO. 1:\72-07401-022\Ponds\sys3\det-pond.dwg

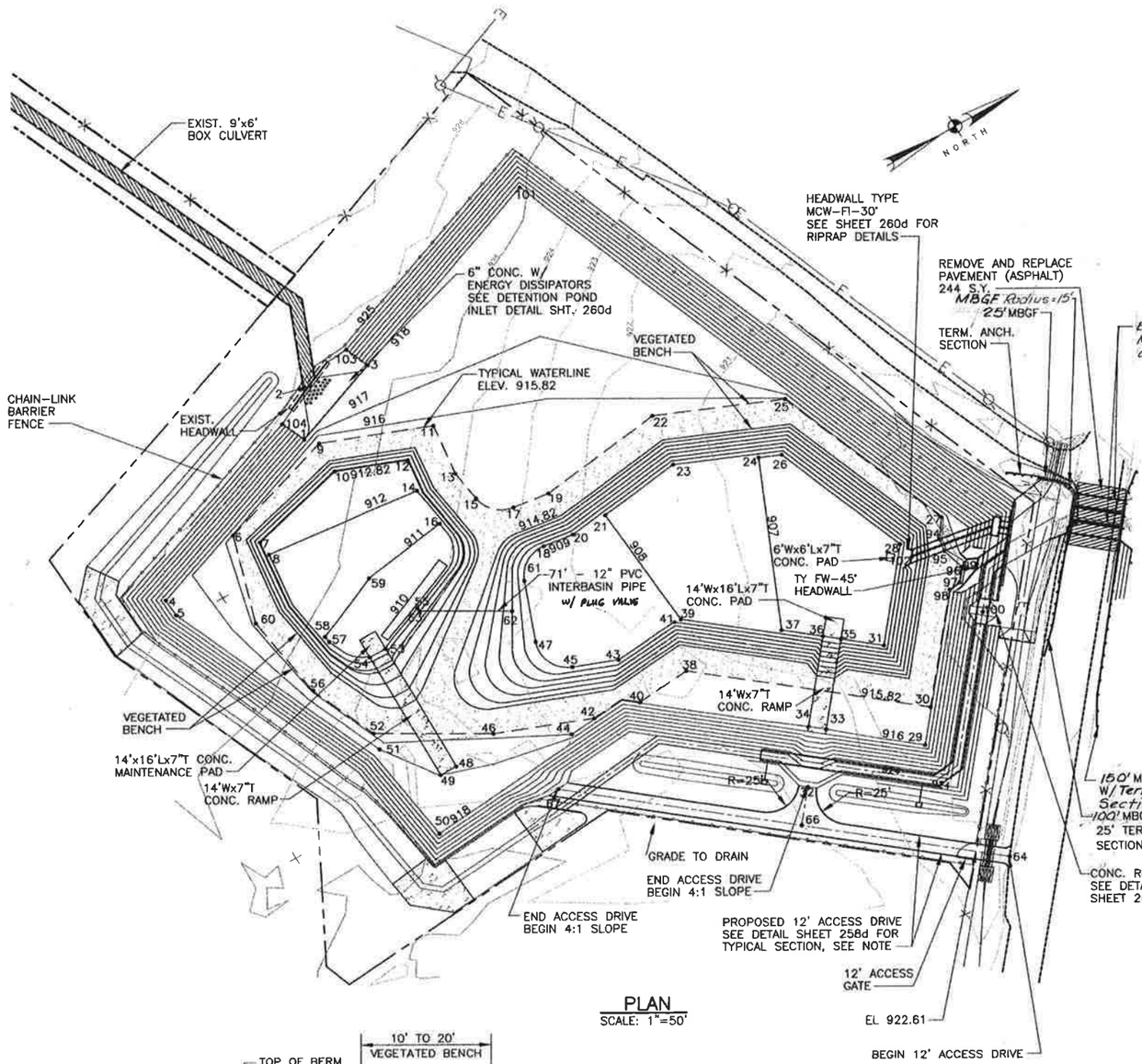

PLAN
SCALE: 1"=50'

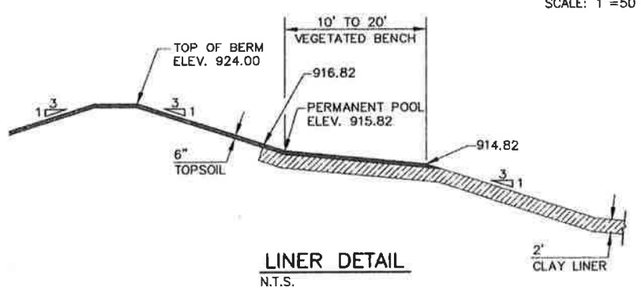

LINER DETAIL
N.T.S.

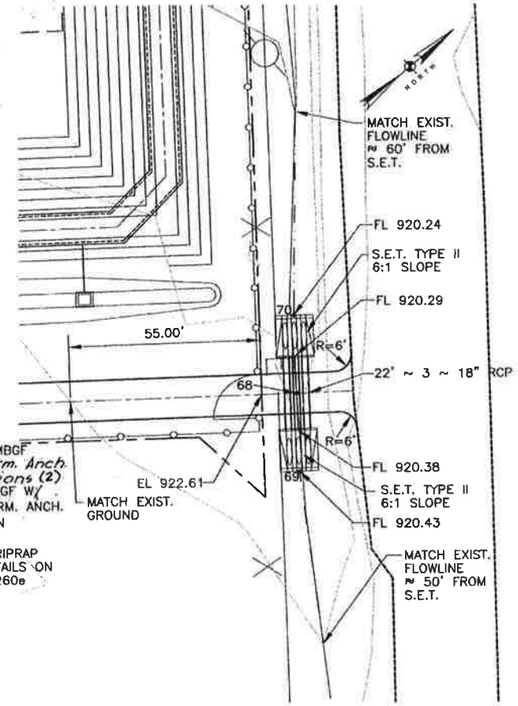

PLAN - DRIVE CULVERTS
SCALE: 1"=20'

NOTES:

1. FINISHED GRADE OF ACCESS ROAD SHALL ALLOW DRAINAGE FLOW ACROSS ROAD TO DITCH.
2. SEE SHT. 260d FOR REINFORCEMENT DETAIL FOR CONC. RAMP AND CONC. MAINTENANCE PADS.
3. PAVEMENT STRUCTURE SHALL BE DETERMINED BY ENGINEER.

STATE OF TEXAS · C.D. MILLS · 83877 · LICENSED PROFESSIONAL ENGINEER
5/14/99

DATE: 05/11/99
JOB NO. T.../183SEC1/DRAWING/es5-wdpd.dwg

POINT LOCATION TABLE

POINT No.	N	E	
POND - CONT.			
94	291999.90	2805691.36	915.82
95	291998.30	2805701.40	915.82
96	292003.62	2805719.24	915.82
97	291995.73	2805728.96	915.82
98	291986.45	2805730.09	915.82
99	292014.50	2805723.04	917.60
100	291999.26	2805758.01	922.00
101	291859.57	2805287.42	918.00
102	291973.96	2805692.37	908.55
103	291679.71	2805330.05	925.00
104	291607.56	2805356.11	925.00
ACCESS DRIVEWAY			
64	291918.66	2805938.19	
66	291792.44	2805835.78	
67	291644.71	2805715.92	
CL ~ 3 ~ 18" RCP			
68	291906.19	2805928.07	
69	291891.70	2805945.93	
70	291920.68	2805910.21	

POINT LOCATION TABLE

POINT No.	N	E	ELEV.
POND			
1	291620.18	2805373.99	
2	291641.04	2805340.74	
3	291685.34	2805373.99	
4	291459.30	2805431.98	918.00
5	291460.02	2805446.37	918.00
6	291530.18	2805413.33	915.82
7	291545.49	2805428.79	912.82
8	291546.68	2805440.64	912.00
9	291624.37	2805383.73	915.82
10	291623.28	2805409.05	912.82
11	291707.25	2805415.85	915.82
12	291676.58	2805429.70	912.82
13	291702.75	2805457.37	915.82
14	291670.40	2805454.05	912.00
15	291706.61	2805482.24	915.82
16	291672.23	2805485.45	911.00
17	291727.86	2805503.17	91582
18	291732.79	2805541.68	909.00
19	291757.22	2805507.27	915.82
20	291756.93	2805545.05	909.00
21	291786.33	2805544.44	908.00
22	291857.77	2805494.82	915.82
23	291851.98	2805536.31	908.00
24	291911.53	2805564.77	907.00
25	291952.51	2805534.92	915.82
26	291928.08	2805571.77	907.00
27	292009.89	2805676.94	915.82
28	291971.58	2805679.44	907.00
29	291907.28	2805828.52	916.00
30	291926.28	2805804.25	915.82
31	291919.91	2805743.12	907.00
32	291811.97	2805811.71	923.00
33	291847.65	2805778.84	916.00
34	291836.78	2805770.02	916.00
35	291893.81	2805721.95	907.00
36	291882.94	2805713.12	907.00
37	291857.48	2805692.47	907.00
38	291777.78	2805683.77	915.82
39	291795.11	2805645.72	908.00
40	291734.38	2805687.53	915.82
41	291789.63	2805645.14	909.00
42	291697.27	2805680.71	915.82
43	291737.02	2805649.70	909.00
44	291675.83	2805683.11	916.00
45	291703.26	2805636.61	909.00
46	291623.61	2805652.16	915.82
47	291688.80	2805604.76	909.00
48	291585.71	2805660.34	916.84
49	291571.71	2805660.27	917.00
50	291547.50	2805700.25	918.00
51	291535.86	2805621.53	918.00
52	291544.15	2805605.58	915.82
53	291586.26	2805551.26	911.00
54	291572.26	2805551.19	911.00
55	291623.58	2805535.18	911.00
56	291520.84	2805552.77	915.82
57	291551.34	2805524.60	911.00
58	291550.56	2805519.51	911.00
59	291603.63	2805496.09	911.00
60	291510.03	2805483.08	915.82
61	291705.84	2805557.90	909.00
62	291685.60	2805574.14	911.00
63	291623.99	2805538.25	912.00

Turner Collie & Braden Inc.
ENGINEERS • PLANNERS • PROJECT MANAGERS

AUSTIN	72-07401-022	

Texas Department of Transportation

WOODS POND
WATER QUALITY AND
DETENTION POND
PLAN AND DETAILS

Designed	RAB		STATE	FEDERAL AID PROJECT NO.			
Drawn	KKY	6	TEXAS	NH 99(556)			U.S.183
Checked	GWS		STATE DIST./DIV.	COUNTY			
Approved	CDB	AUS	WILLIAMSON	0151	05	072	260b

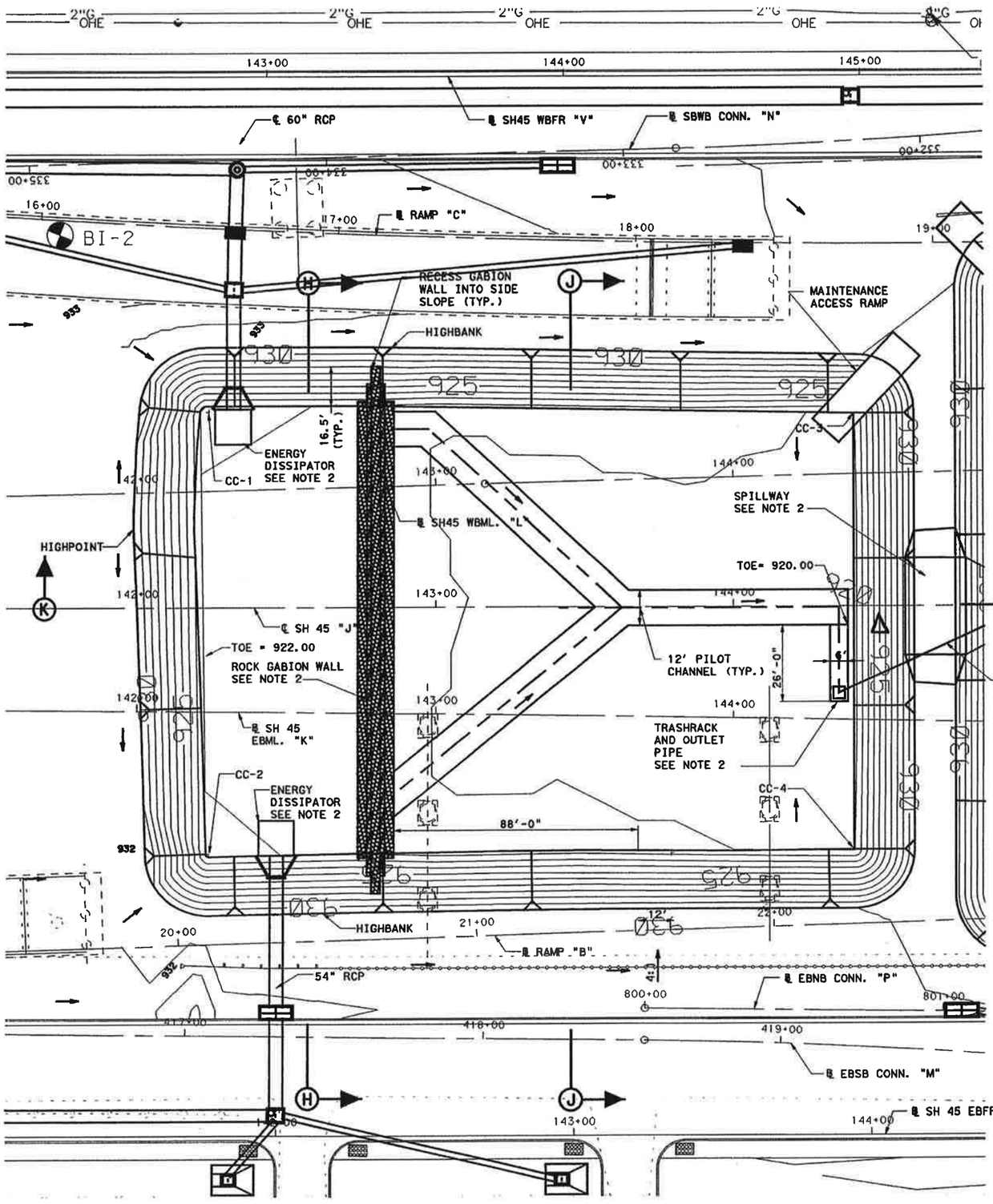

CALCULATIONS							
DRAINAGE AREA (ACRES)	EXISTING IMPERVIOUS COVER %	PROPOSED IMPERVIOUS COVER %	UNCAPTURED AREA (ACRES)	CAPTURED AREA (ACRES)	CAPTURED VOLUME (In.)	BASE VOLUME (Cu. Ft.)	PROVIDED VOLUME (Cu. Ft.)
55.70	42.8	86.5	0.00	55.70	1.38	271,528	325,834

CC-1
X= 3,094,792.2095
Y= 10,144,119.0867

CC-2
X= 3,094,846.6959
Y= 10,143,978.2012

CC-3
X= 3,094,994.9615
Y= 10,144,196.4276

CC-4
X= 3,095,048.7265
Y= 10,144,057.4076

NOTES:

1. FOR SECTIONS SEE SHEET "WATER QUALITY POND SECTIONS".

2. FOR DETAILS SEE "WATER QUALITY POND DETAILS" SHEETS.

STATE OF TEXAS
ANTHONY J. SCHNEIDER
71848
LICENSED
PROFESSIONAL ENGINEER

8/15/03

WATER QUALITY POND LAYOUT

LINE B AND LINE C POND

SH 45 / US 183 INTERCHANGE

SCALE:
1" = 40'

HNTB ARCHITECTS ENGINEERS PLANNERS
The HNTB Companies

Texas Department of Transportation
© 2003 TEXAS TURNPIKE AUTHORITY DIVISION

DRAWING PREPARED BY:			HNTB CORPORATION	
SHEET 1 OF 5			45d10805.dgn	
FED. RD. DIV. NO.	FEDERAL AID PROJECT NO.			SHEET NO.
6	MD 2002 (243)			659
DSGN: XZ	STATE	DIST.	COUNTY	
CHK DSGN: AJS	TEXAS	14	WILLIAMSON	
DWN: TJC	CONT.	SECT.	JOB	HIGHWAY NO.
CHK DWG: AJS	0683	01	069	SH 45

Revised 8/29/03

Scale: 40.000003:1.000000
Plotted on: 15-AUG-2003 08:07
Pen Table: I:\Jobs\32058\techprod\rdwy\plots\32058drng.pen
Design Filename: I:\Jobs\32058\Techprod\Rdwy\Dwg\Ph81\Drng\45d10805.dgn

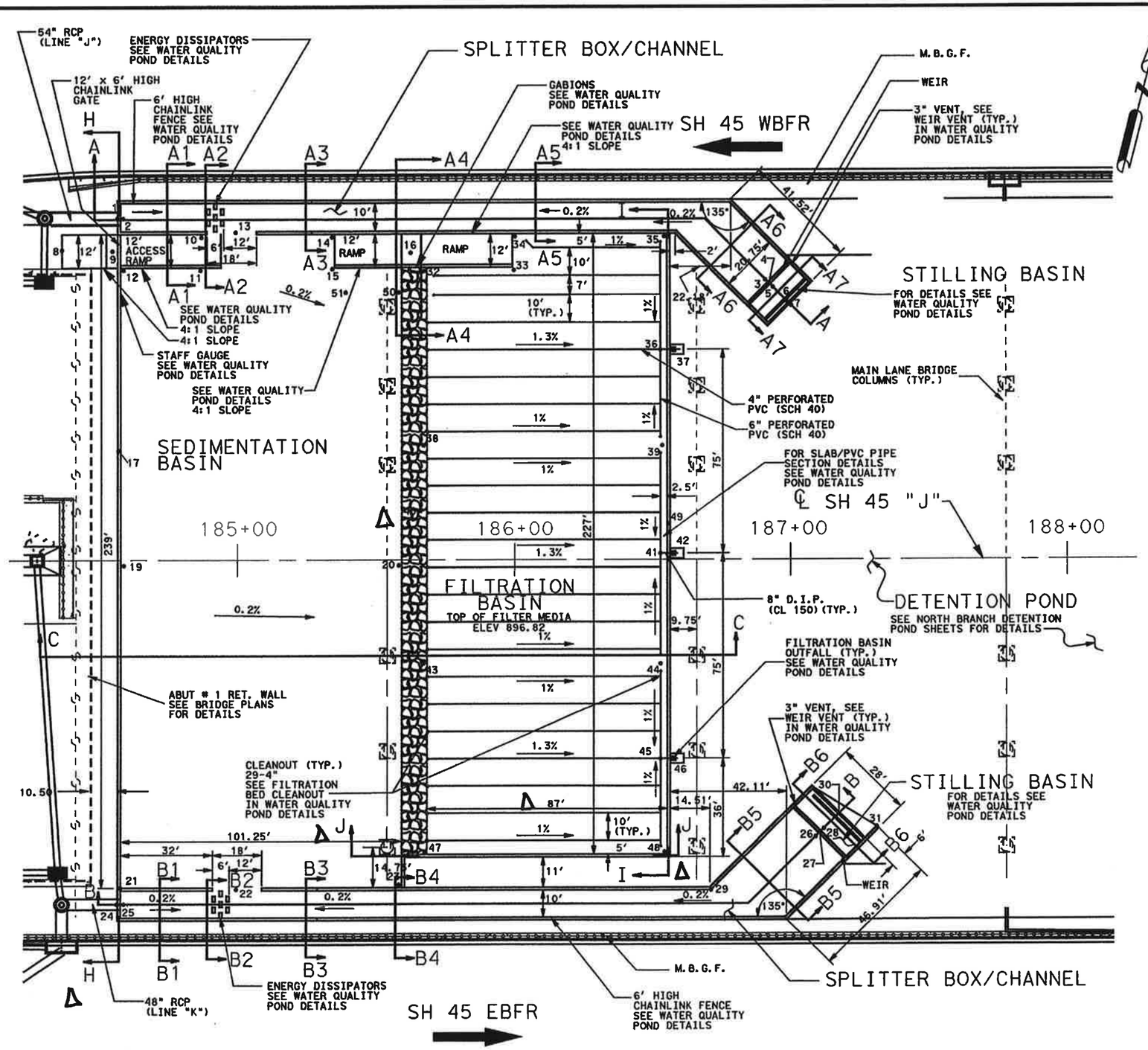

WATER QUALITY POND
DESIGN WATER ELEVATION = 901.38

NOTES:

1. WATER QUALITY POND FULL WATER LEVEL ELEVATION: 901.32'
2. WATER QUALITY POND 20% SEDIMENTATION ELEVATION: 897.72'
3. SEE WATER QUALITY POND DETAILS FOR POND AND CONCRETE DETAILS.

	ELEV.	STATION	OFFSET
1	900.00	184+56.94	124.74 LT
2	897.03	184+58.96	124.73 LT
3	897.35	186+91.49	102.10 LT
4	901.38	186+92.28	101.34 LT
5	895.10	186+92.92	100.63 LT
6	895.00	186+98.84	94.85 LT
7	894.98	187+00.00	93.39 LT
8	902.00	184+36.95	113.64 LT
9	906.00	184+55.33	113.56 LT
10	896.98	184+86.93	118.24 LT
11	896.98	184+86.63	106.29 LT
12	897.03	184+59.08	106.31 LT
13	896.96	184+97.54	119.72 LT
14	896.89	185+34.34	118.21 LT
15	896.87	185+34.35	106.78 LT
16	902.82	185+62.54	112.62 LT
17	906.00	184+57.47	40.41 LT
19	897.12	184+59.09	1.93 RT
20	896.82	185+58.21	1.93 RT
21	897.32	184+59.00	118.65 RT
22	897.30	184+99.55	120.31 RT
23	896.82	185+58.21	118.66 RT
24	900.00	184+56.74	125.70 RT
25	897.38	184+59.13	125.76 RT
26	897.73	187+09.40	100.75 RT
27	901.38	187+10.30	100.05 RT
28	895.10	187+11.00	99.38 RT
29	906.00	186+71.36	121.17 RT
30	895.00	187+16.85	93.50 RT
31	895.00	187+30.42	97.81 RT
32	894.82	185+67.25	105.93 LT
33	894.41	185+99.77	106.27 LT
34	894.51	186+00.21	118.24 LT
35	893.97	186+54.24	118.29 LT
36	893.55	186+52.76	77.25 LT
37	893.50	186+57.76	77.25 LT
38	894.82	185+67.10	42.26 LT
39	893.93	186+53.45	42.13 LT
40	906.00	185+65.88	17.99 LT
41	893.55	186+52.75	2.25 LT
42	893.50	186+57.75	2.25 LT
43	894.82	185+67.06	37.78 RT
44	893.93	186+52.78	37.94 RT
45	893.55	186+52.76	72.75 RT
46	893.50	186+57.76	72.75 RT
47	894.82	185+67.45	106.70 RT
48	893.93	186+54.26	106.72 RT
49	906.00	186+55.83	13.12 LT
50	896.82	185+58.21	98.30 LT
51	896.86	185+39.82	98.33 LT

STATE OF TEXAS
ANTHONY J. SCHNEIDER
71848
LICENSED PROFESSIONAL ENGINEER
8/19/03

Revised 8/29/03

NORTH BRANCH WATER QUALITY POND WEST

PLAN

STA 184+65 TO STA 187+70

SH 45 / US 183 INTERCHANGE

SCALE: PLAN 1"=40'

HNTB ARCHITECTS ENGINEERS PLANNERS
The HNTB Companies

Texas Department of Transportation
© 2003 TEXAS TURNPIKE AUTHORITY DIVISION

DRAWING PREPARED BY:			HNTB CORPORATION	
SHEET 1 OF 14			45WQPL01.DGN	
FED. RD. DIV. NO.	FEDERAL AID PROJECT NO.			SHEET NO.
6				664
DSGN AJS	STATE	DIST.	COUNTY	
CHK. DSGN AJS	TEXAS	14	WILLIAMSON	
DWN KZK	CONT.	SECT.	JOB	HIGHWAY NO.
CHK. DWN CAD	0683	01	069	SH 45

Scale: 40.000000:1.000000
Plotted on: 19-AUG-2003 17:19
Pen Table: I:\Jobs\32058\techprod\rdwy\plots\32058drng.pen
Design Filename: I:\Jobs\32058\Techprod\Rdwy\Dwg\Phs1\Drng\Houston(8-19-03)\45wqp101.dgn

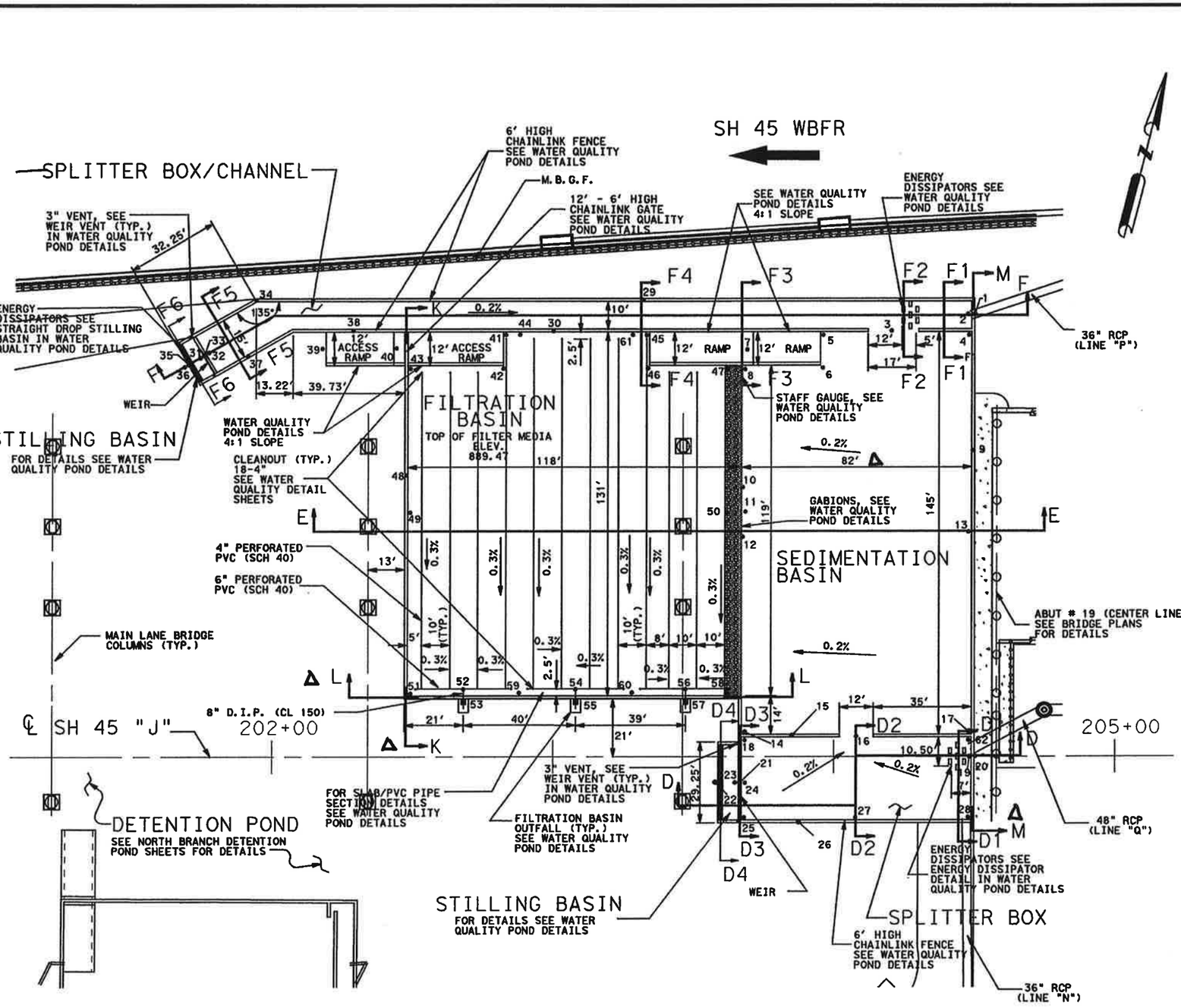

	ELEV.	STATION	OFFSET
1	890.20	204+50.20	159.52 LT
2	889.88	204+47.65	159.39 LT
3	889.83	204+21.28	153.34 LT
4	889.87	204+48.03	151.95 LT
5	889.79	203+96.02	151.95 LT
6	889.77	203+95.94	140.19 LT
7	896.00	203+68.89	146.76 LT
8	889.68	203+68.17	139.74 LT
9	896.00	204+49.40	110.27 LT
10	889.68	203+68.64	98.77 LT
11	889.68	203+68.29	88.11 LT
12	889.68	203+68.45	77.32 LT
13	889.82	204+47.85	80.78 LT
14	889.68	203+68.16	9.01 LT
15	896.00	203+85.03	7.71 LT
16	889.84	204+07.67	7.39 LT
17	889.92	204+47.92	9.15 LT
18	889.92	203+68.15	5.97 LT
19	889.92	204+48.15	0.37 LT
20	889.99	204+50.34	0.37 LT
21	892.34	203+66.48	9.35 RT
22	887.10	203+58.74	9.35 RT
23	887.20	203+65.99	9.35 RT
24	889.93	203+68.45	9.35 RT
25	889.94	203+68.01	21.96 RT
26	896.00	203+87.52	23.60 RT
27	889.90	204+07.82	21.98 RT
28	889.94	204+47.92	21.86 RT
29	896.00	203+31.90	164.28 LT
30	896.00	202+95.85	153.53 LT
31	889.10	201+77.28	144.36 LT
32	890.32	201+78.78	145.35 LT
33	892.34	201+77.89	144.75 LT
34	896.00	201+64.41	164.47 LT
35	889.00	201+72.36	141.40 LT
36	889.00	201+71.54	141.30 LT
37	896.00	201+64.94	143.44 LT
38	896.00	201+85.77	143.28 LT
39	890.00	202+17.79	147.15 LT
40	896.00	202+35.75	143.69 LT
41	887.66	202+82.96	152.03 LT
42	887.62	202+82.09	140.00 LT
43	887.63	202+19.03	139.92 LT
44	887.66	202+88.02	152.12 LT
45	887.66	203+33.07	151.95 LT
46	887.62	203.33.53	140.04 LT
47	887.62	203+61	139.89 LT
48	896.00	202+47.56	103.72 LT
49	887.47	202+48.97	87.84 LT
50	887.47	203+61	87.96 LT
51	887.27	202+49.16	23.03 LT
52	887.22	202+68.00	24.50 LT
53	887.20	202+68.00	19.50 LT
54	887.22	203+08.00	24.50 LT
55	887.20	203+08.00	19.50 LT
56	887.22	203+47.00	24.50 LT
57	887.20	203+47.00	19.50 LT
58	887.27	203+61	23.03 LT
59	887.27	202+87.86	23.17 LT
60	887.27	203+28.01	23.25 LT
61	887.66	203+28.08	152.04 LT
62	889.92	204+47.98	5.98 LT

NOTES:

1. WATER QUALITY POND FULL WATER LEVEL ELEVATION: 891.97'
2. WATER QUALITY POND 20% SEDIMENTATION ELEVATION: 889.97'
3. 0.75' x 3' x 3' REVET MATTRESS PLACED ON TOP OF FILTER MEDIA AT DRAINAGE DOWNSPOUT
4. SEE WATER QUALITY POND DETAILS FOR POND AND CONCRETE DETAILS.

ANTHONY J. SCHNEIDER 71848 LICENSED PROFESSIONAL ENGINEER STATE OF TEXAS
8/19/03

WATER QUALITY POND
DESIGN WATER ELEVATION = 892.34

Revised 8/29/03

NORTH BRANCH
WATER QUALITY POND EAST
PLAN
STA 201+60 TO STA 204+60

SH 45 / US 183 INTERCHANGE

SCALE: PLAN 1"=40'

HNTB ARCHITECTS ENGINEERS PLANNERS
The HNTB Companies

Texas Department of Transportation
© 2003 TEXAS TURNPIKE AUTHORITY DIVISION

DRAWING PREPARED BY:			HNTB CORPORATION		
SHEET 5 OF 14			45WQPL02.DGN		
FED. RD. DIST. NO.	FEDERAL AID PROJECT NO.				SHEET NO.
6					668
DSN: AJS	STATE	DIST.	COUNTY		
CHK: MDM	TEXAS	14	WILLIAMSON		
DWN: KZK	CONT.	SECT.	JOB	HIGHWAY NO.	
CHK: CAD	0683	01	069	SH 45	

Scale: 40.000000:1.000000
Plotted on: 19-AUG-2003 17:17
Pen Table: I:\Jobs\32058\techprod\rdwy\plots\32058drng.pen
Design Filename: I:\Jobs\32058\TechProd\Rdwy\Dwg\Phs1\Drng\Houston(8-19-03)\45wqp102.dgn

Scale: 40.000000:1.000000
Plotted on: 31-JUL-2003 09:23

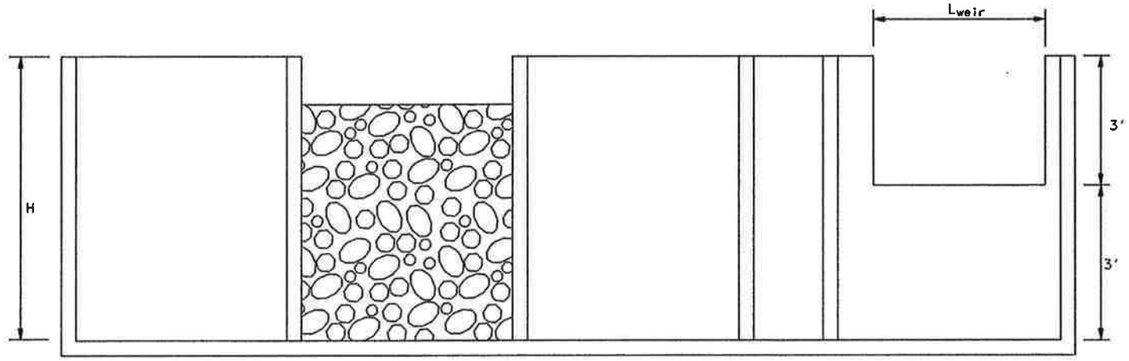

SECTION A-A

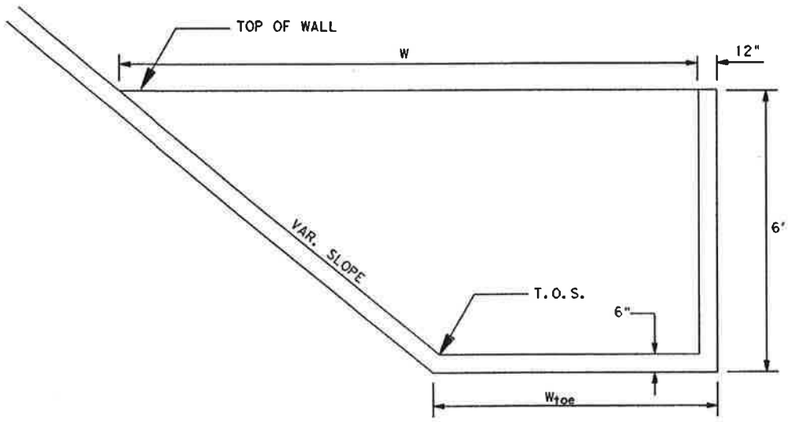

SECTION B-B

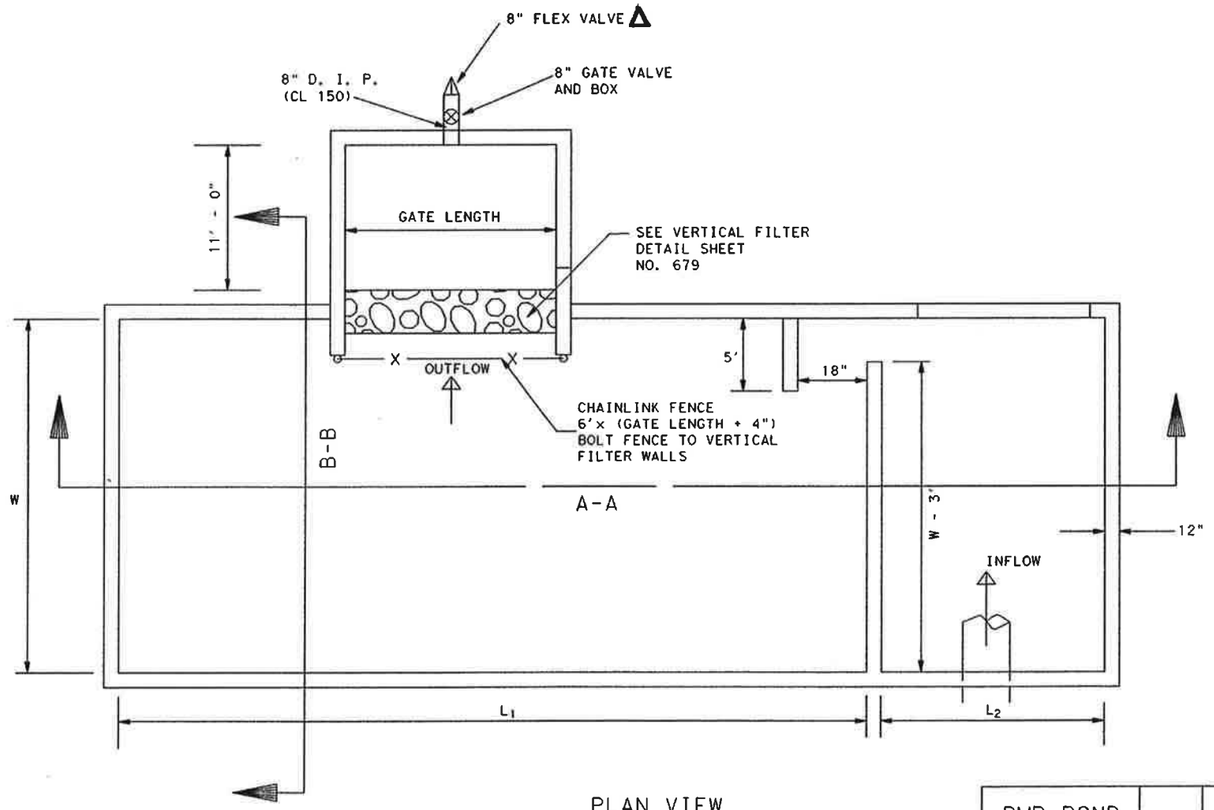

PLAN VIEW

NOTE:

REFER TO SHEET NO. 672 FOR REINFORCEMENT DETAIL.

VERTICAL FILTER SHALL BE PLACED AT THE FARTHEST DISTANCE FROM THE STORM SEWER INFLOW PIPE.

REFER TO DRAINAGE PLAN PROFILE SHEETS FOR RAMP PLACEMENT.

GRADE BOTTOM SLAB TO DRAIN @ VERTICAL FILTER.

BMP PONDS SUMMARY

BMP POND NUMBER	L1	L2	L WEIR	WIDTH (W)	(W) TOE	BOTTOM ELEV. (FT)	GATE LENGTH (FT)
E	30	6	5	27	15	920	8
F	98	6	5	24	12	919	8
G	72	6	5	22	10	918	8
L	96	6	5	55	31	888.5	10
M	96	6	5	61	37	888	10

Note: Volume = Runoff Area x (0.5/12) c.f.

Revised 8/29/03

STATE OF TEXAS
ANTHONY J. SCHNEIDER
71846
LICENSED
PROFESSIONAL ENGINEER
7/30/03

BMP POND DETAIL 1

SH 45 / US 183 INTERCHANGE

N.T.S.

HNTB ARCHITECTS ENGINEERS PLANNERS
The HNTB Companies

Texas Department of Transportation
© 2003 TEXAS TURNPIKE AUTHORITY DIVISION

DRAWING PREPARED BY:	HNTB CORPORATION			
SHEET 1 OF 3	BMPDETAIL1.DGN			
FED. AID DIV. NO.	FEDERAL AID PROJECT NO.			SHEET NO.
6	MO 2002 (243)			678
DSN: BDH	STATE	DIST.	COUNTY	
CHK: AJS	TEXAS	14	WILLIAMSON	
DWN: BDH	CONT.	SECT.	JOB	HIGHWAY NO.
CHK: JEG	0683	01	069	SH 45

Pen Table: I:\Jobs\32058\Techprod\rdwy\plots\32058drng.pen
Design Filename: I:\Jobs\32058\Techprod\Rdwy\Dwg\Phe1\Drng\bmpdetail1.dgn

Scale: 40.000003:1.000000
Plotted on: 30-JUL-2003 16:22

Pen Table: I:\Jobs\32058\Techprod\Draw\Plote\32058dgnp.pen
Design Filename: I:\Jobs\32058\Techprod\Rdwy\Dwg\Phe1\Dmg\45d10801.dgn

SEE SHEET
CROSS CULVERT LAYOUT
WBFR STA 146+36.32

6' X 5' BOX

℄ SBWB CONN. "N"

℄ RAMP "C"

R=24'

HIGHBANK 20' TYP.

MAINTENANCE ACCESS RAMPS

HIGHBANK

℄ SH45 WBFR. "V"

LINE E

℄ NBWB CONN. "O"

2- 10'x6' BOX CULVERTS TO BE REMOVED

BMP POND "E"
SEE DETAIL SHEETS 678-680

CC
X=3,095,034.1234
Y=10,144,255.9621

X= 3,095,108.7298
Y= 10,144,287.1427
FL = 919.80

℄ SH45 WBML. "L"

SPILLWAY
(5" CL B CONC RIPRAP)
SEE NOTE 2

℄ SH 45 "J"

0.31%

X= 3,095,073.0631
Y= 10,144,155.2758
6" ℄ = 919.50

Δ 12' PILOT CHANNEL
(5" CL B CONC. RIPRAP)

℄ PILOT CHANNEL

BRIDGE COLUMN (TYP.)

℄ SH 45 EBML. "K"

CC
X=3,095,107.9868
Y=10,144,064.9737

℄ RAMP "B"

Δ 5" CL B CONC. RIPRAP
SIDE SLOPE (TYP.)

R=22'

℄ EBNB CONN. "P"

20' TYP.

HIGH BANK

℄ EBSB CONN. "M"

℄ SH 45 EBFR "W"

LINE F

MATCH LINE STA 148+50 "J"

NOTES:

1. FOR SECTIONS SEE DETENTION POND SECTIONS, MAIN POND.

2. FOR SPILLWAY DETAIL SEE WATER QUALITY POND DETAILS SHEETS.

ANTHONY J. SCHNEIDER
71846
LICENSED
PROFESSIONAL ENGINEER
STATE OF TEXAS
7/30/03

Revised 8/29/03

DETENTION POND LAYOUT

MAIN POND

SH 45 / US 183 INTERCHANGE

SCALE:
1" = 40'

HNTB ARCHITECTS ENGINEERS PLANNERS
The HNTB Companies

Texas Department of Transportation
© 2003 TEXAS TURNPIKE AUTHORITY DIVISION

DRAWING PREPARED BY:			HNTB CORPORATION		
SHEET 1 OF 12			45d10801.dgn		
FED. RD. DIV. NO.	FEDERAL AID PROJECT NO.			SHEET NO.	
6	MG 2002 (243)			681	
DSGN: MRH	STATE	DIST.	COUNTY		
CHK DSGN: BCS	TEXAS	14	WILLIAMSON		
DWN: HFW	CONT.	SECT.	JOB	HIGHWAY NO.	
CHK DWG: JME	0683	01	069	SH 45	

Scale: 40.000003:1.000000
Plotted on: 30-JUL-2003 16:22

Pen Tables: I:\Jobs\32058\techprod\rdwy\plots\32058drng.pen
Design Filename: I:\Jobs\32058\Techprod\Rdwy\Dwg\Phs1\Drng\45d10802.dgn

MATCH LINE STA 148+50 "J"

℄ SH 45 WBFR "V"

EQUALIZATION PIPE
TO NORTH POND
SEE CROSS CULVERT LAYOUT
WBFR STA 151+11.12

℄ US183
WEST TURN AROUND
"AM"

℄ US 183
SBFR "AG"

℄ RAMP, "B"

HIGHBANK

5" CL B CONC. RIPRAP
SIDE SLOPE (TYP.)

X=3,095,553.1490
Y=10,144,450.8170
E=919.00

CC
X=3,095,594.3268
Y=10,144,418.2196

BMP POND "G"
SEE DETAIL SHEETS 678-680

PI
X=3,095,637.2258
Y=10,144,370.0064
E=917.09

12' PILOT CHANNEL
(6" CL B CONC. RIPRAP)

0.31%

℄ PILOT CHANNEL

X=3,095,665.5127
Y=10,144,346.4824
E=917.00

CC
X=3,095,636.2329
Y=10,144,312.4511

BMP POND "F"
SEE DETAIL SHEETS 678-680

18" RCP E = 921.13

BRIDGE COLUMN (TYP.)

X=3,095,649.4345
Y=10,144,272.6795
E=918.00

805+00 - 25 L/F OF 18" RCP

HIGHBANK

℄ SH 45 EBFR "W"

SEE CROSS CULVERT
EXTENSION LAYOUT,
POND OUTLET

EQUALIZATION PIPE
TO SOUTH POND
SEE CROSS CULVERT
LAYOUT EBFR
STA 150+30.00

℄ EBNB CONN. "R"

℄ SH 45 "J"

℄ NBNB CONN. "Q"

℄ SH 45 EBML "K"

℄ SH 45 WBML "L"

Revised 8/29/03

NOTE:
FOR SECTIONS SEE DETENTION POND SECTIONS, MAIN POND.

STATE OF TEXAS
ANTHONY J. SCHNEIDER
71848
LICENSED
PROFESSIONAL ENGINEER
7/30/03

DETENTION POND LAYOUT

MAIN POND

SH 45 / US 183 INTERCHANGE

SCALE:
1" = 40'

HNTB ARCHITECTS ENGINEERS PLANNERS
The HNTB Companies

Texas Department of Transportation
© 2003 TEXAS TURNPIKE AUTHORITY DIVISION

DRAWING PREPARED BY:			HNTB CORPORATION		
SHEET 2 OF 12			45d10802.dgn		
FED. RD. DIV. NO.		FEDERAL AID PROJECT NO.			SHEET NO.
6		MG 2002 (243)			682
DSN: MRH	STATE	DIST.	COUNTY		
CHK DSN: BCS	TEXAS	14	WILLIAMSON		
DWG: HFW	CONT.	SECT.	JOB	HIGHWAY NO.	
CHK DWG: JME	0683	01	069	SH 45	

Scale: 40.000003:1.000000
Plotted on: 15-AUG-2003 10:40

Pen Table: I:\Jobs\32058\Techprod\rdwy\plots\32058drng.pen
Design Filename: I:\Jobs\32058\Techprod\Rdwy\Dwg\Phase1\Drng\45d10803.dgn

COORDINATE POINTS FOR NORTH DETENTION POND LAYOUT

1	N=10144737.78 E=3095506.14	7	N=10144791.78 E=3095517.62	13	N=10144704.13 E=3095566.67	19	N=10144670.45 E=3095553.38	25	N=10144518.74 E=3095403.69	31	N=10144602.71 E=3095427.32	37	N=10144690.84 E=3095438.09
2	N=10144715.29 E=3095494.08	8	N=10144809.57 E=3095535.17	14	N=10144696.83 E=3095549.95	20	N=10144567.37 E=3095521.69	26	N=10144532.64 E=3095389.56	32	N=10144610.40 E=3095412.81	38	N=10144715.68 E=3095432.31
3	N=10144712.86 E=3095536.12	9	N=10144791.34 E=3095552.16	15	N=10144676.33 E=3095533.31	21	N=10144558.57 E=3095491.76	27	N=10144547.95 E=3095378.67	33	N=10144637.54 E=3095397.35	39	N=10144746.32 E=3095447.46
4	N=10144754.86 E=3095539.17	10	N=10144774.75 E=3095556.11	16	N=10144650.91 E=3095540.45	22	N=10144539.36 E=3095467.18	28	N=10144561.44 E=3095391.74	34	N=10144663.08 E=3095415.32	40	N=10144735.14 E=3095462.03
5	N=10144770.59 E=3095525.77	11	N=10144763.00 E=3095568.47	17	N=10144617.91 E=3095571.29	23	N=10144510.19 E=3095441.69	29	N=10144564.47 E=3095419.96	35	N=10144667.55 E=3095426.12	41	N=10144756.19 E=3095493.32
6	N=10144780.49 E=3095519.89	12	N=10144732.99 E=3095586.20	18	N=10144588.61 E=3095577.10	24	N=10144503.15 E=3095420.14	30	N=10144580.87 E=3095437.78	36	N=10144676.99 E=3095436.38		

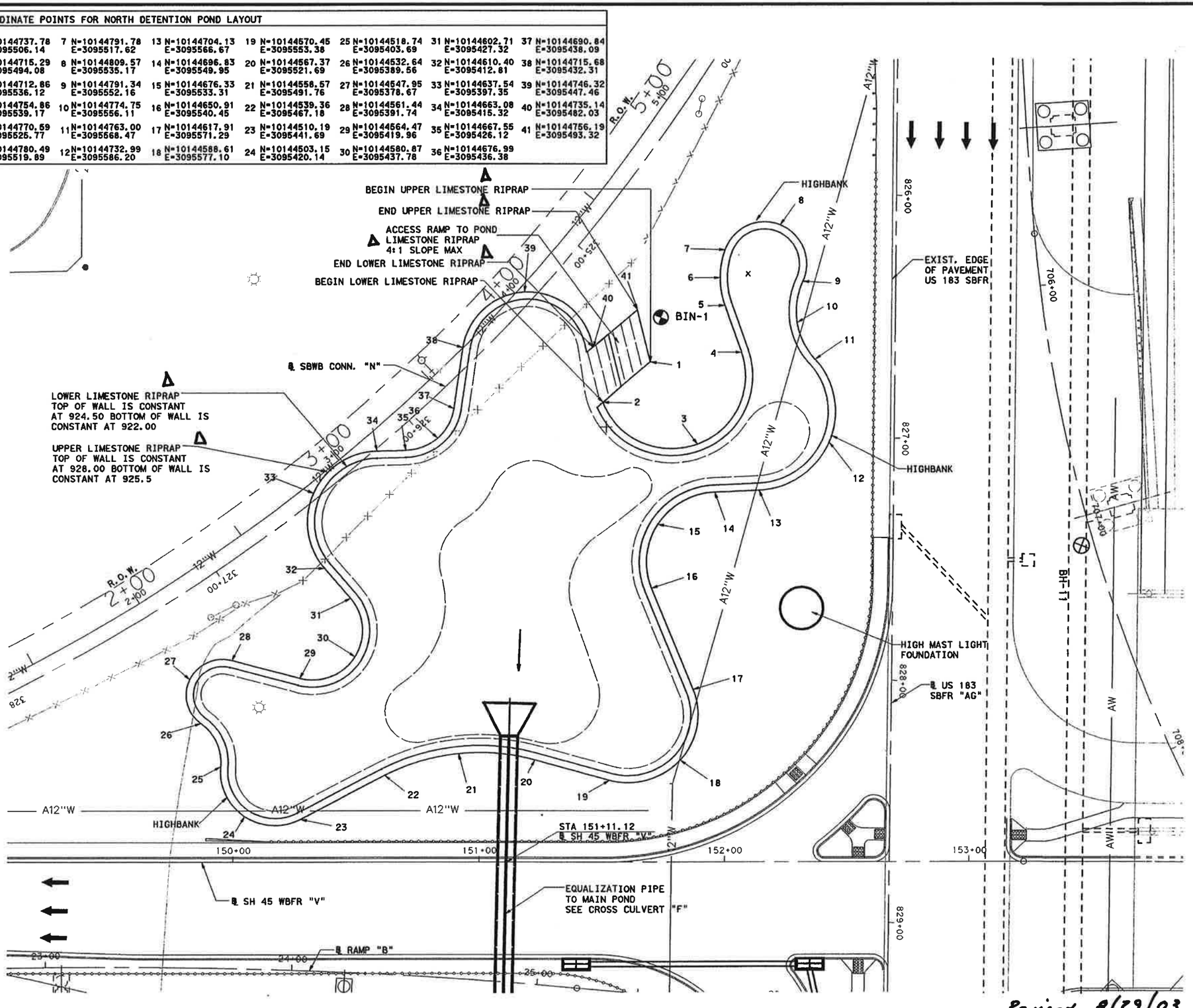

NOTES:

1. CONTRACTOR TO PROVIDE A 3:1 SLOPE FROM BOTTOM OF UPPER ▲ LIMESTONE RIPRAP TO TOP OF LOWER ▲ LIMESTONE RIPRAP.
2. SEE POND DETAIL SHEETS FOR ▲ LIMESTONE RIPRAP CROSS SECTION.

STATE OF TEXAS
ANTHONY J. SCHNEIDER
71848
LICENSED PROFESSIONAL ENGINEER
8/15/03

DETENTION POND LAYOUT

NORTH POND

SH 45 / US 183 INTERCHANGE

SCALE:
1" = 40'

HNTB ARCHITECTS ENGINEERS PLANNERS
The HNTB Companies

Texas Department of Transportation
© 2003 TEXAS TURNPIKE AUTHORITY DIVISION

DRAWING PREPARED BY:	HNTB CORPORATION				
SHEET 3 OF 12	45d10803.dgn				
FED. DIV. NO.	FEDERAL AID PROJECT NO.			SHEET NO.	
6	MG 2002 (243)			683	
DSN. CLS	STATE	DIST.	COUNTY		
CHK. BN	TEXAS	14	WILLIAMSON		
DWN. HKA	CONT.	SECT.	JOB	HIGHWAY NO.	
CHK. AJS	0683	01	069	SH 45	

Revised 8/29/03

Scale: 40.000003:1.000000
Plotted on: 15-AUG-2003 10:40

Pen Table: I:\jobs\32058\techprod\rdwy\plots\32058dmng.pen
Design Filename: I:\jobs\32058\Techprod\Rdwy\Dwg\Phs1\Drng\45d10804.dgn

COORDINATE POINTS FOR SOUTH DETENTION POND LAYOUT													
42	N=10144010.79 E=3095806.40	48	N=10144044.99 E=3095746.33	54	N=10143993.96 E=3095691.76	60	N=10144131.42 E=3095650.53	66	N=10144115.85 E=3095763.82	72	N=10144064.91 E=3095839.55
43	N=10144021.89 E=3095793.22	49	N=10144051.95 E=3095740.92	55	N=10144013.63 E=3095654.15	61	N=10144148.75 E=3095673.08	67	N=10144101.51 E=3095768.24	73	N=10144044.26 E=3095827.71
44	N=10144018.23 E=3095780.56	50	N=10144065.30 E=3095734.51	56	N=10144046.66 E=3095635.86	62	N=10144160.90 E=3095700.21	68	N=10144078.79 E=3095766.57	74	N=10144036.24 E=3095807.24
45	N=10144026.57 E=3095770.36	51	N=10144074.02 E=3095710.38	57	N=10144067.62 E=3095604.45	63	N=10144143.54 E=3095724.33	69	N=10144058.95 E=3095777.13	75	N=10144026.08 E=3095819.29
46	N=10144035.56 E=3095763.87	52	N=10144050.05 E=3095701.21	58	N=10144106.67 E=3095584.60	64	N=10144130.11 E=3095735.04	70	N=10144059.91 E=3095799.58		
47	N=10144040.86 E=3095754.13	53	N=10144032.88 E=3095708.70	59	N=10144129.20 E=3095622.17	65	N=10144123.39 E=3095750.85	71	N=10144071.80 E=3095816.77		

NOTES:

1. CONTRACTOR TO PROVIDE A 3:1 SLOPE FROM BOTTOM OF UPPER Δ LIMESTONE RIPRAP TO TOP OF LOWER Δ LIMESTONE RIPRAP.
2. SEE POND DETAIL SHEETS FOR Δ LIMESTONE RIPRAP CROSS SECTION AND TREE PROTECTION.

ANTHONY J. SCHNEIDER 71848 LICENSED PROFESSIONAL ENGINEER STATE OF TEXAS

8/13/03

DETENTION POND LAYOUT

SOUTH POND

SH 45 / US 183 INTERCHANGE

SCALE: 1" = 40'

HNTB ARCHITECTS ENGINEERS PLANNERS
The HNTB Companies

Texas Department of Transportation
© 2003 TEXAS TURNPIKE AUTHORITY DIVISION

DRAWING PREPARED BY:			HNTB CORPORATION	
SHEET 4 OF 12			45d10804.dgn	
FED. RD. DIV. NO.	FEDERAL AID PROJECT NO.			SHEET NO.
6	MO 2002 (243)			684
DGN: CLS	STATE	DIST.	COUNTY	
CHK. DGN: BN	TEXAS	14	WILLIAMSON	
DWN: HKA	CONT.	SECT.	JOB	HIGHWAY NO.
CHK. DWN: AJS	0683	01	069	SH 45

Revised 8/29/03

	ITEM 100	ITEM 110	ITEM 110	ITEM 132	ITEM 132	ITEM 160	ITEM 160	ITEM 164	ITEM 164	ITEM 164	ITEM 168	ITEM 169	ITEM 169	ITEM 247	ITEM 310	ITEM 400	ITEM 400	ITEM 402	ITEM 421	ITEM 423	ITEM 432	ITEM 450	ITEM 450	ITEM 460	ITEM 462	ITEM 462	ITEM 462
	Prep. R.O.W.	EXCAV (CHANNEL)	EXCAV (POND)	EMBANK (TY B)	EMBANK (DC) (TY C) MOD	Furn & Plac Tpsl (Cl 2) (4in)	Furn & Plac Tpsl (Cl 2) (6in)	Cell Fib Mulch Seed	Drill Seed (Temp) (Warm)	Drill Seed (Perm) (Urban) (Clay)	Vegetative Watering	SOIL RET BLNKT (CL1) (TY A)	SOIL RET BLNKT (CL2)(TY G)	Fl Bs (TyD Gr6 Cl 2) (Comp In Plac)	Apsh Mat (MC-30)	Struct Excav (Sewer)	Struct Excav (Culv Large)	TRENCH EXCAV PROTECT	CL C Conc. (misc.)	Pond Wall (Cast-In-Place)	RIPRAP (CONC.) (CL B)	Rail (TY PR)	Rail (TY C4) (S)	CMP (Gal Stl 12in)	Conc Box Culv (2'x4')	Conc Box Culv (4'x4')	Conc Box Culv (6'x4')
	AC	CY	CY	CY	CY	SY	SY	SY	SY	SY	MG	SY	SY	TONS	GAL	CY	CY	LF	CY	SF	CY	LF	LF	LF	LF	LF	LF
620 Median Pond	–	–	7313	–	892	–	2144	–	1072	2144	54	–	–	–	–	4130	–	2165	81.3	9811	5.1	–	1055	35	–	–	468
LakeCreek Pond 1A	–	–	(2053)	–	–	–	–	–	–	–	–	–	–	–	–	107	–	95	–	–	–	–	–	6	–	–	–
LakeCreek Pond 1B	–	–	(1908)	–	–	–	–	–	–	–	–	–	–	–	–	42	–	54	–	–	–	–	–	6	–	–	–
LakeCreek Pond 1C	–	–	(1657)	–	–	–	–	–	–	–	–	–	–	–	–	7	–	10	–	–	–	–	–	6	–	–	–
Hymeadow Pond 2A	–	–	(3048)	–	–	–	–	–	–	–	–	–	–	–	–	115	–	62	–	–	–	–	–	6	–	–	–
Hymeadow Pond 2B	–	–	(1529)	–	–	–	–	–	–	–	–	–	–	–	–	2	–	7	–	–	–	–	–	6	–	–	–
Hymeadow Pond 2C	–	–	(2260)	–	–	–	–	–	–	–	–	–	–	–	–	50	–	34	–	–	–	–	–	6	–	–	–
Hymeadow Pond 2D1	–	–	(3286)	–	–	–	–	–	–	–	–	–	–	–	–	212	–	124	–	–	–	–	–	6	–	–	–
Hymeadow Pond 2D2	–	–	(4381)	–	–	–	–	–	–	–	–	–	–	–	–	1893	–	735	–	–	–	–	–	6	–	–	–
Pond Springs Pond	1.04	93	5300	–	441	–	5056	–	2420	4840	121	1403	–	45	–	1656	–	336	57.8	5002	78	–	–	13	–	44	–
Pond Springs Detention Pond	1.15	1162	22610	308	–	1459	2780	–	3391	6782	279	363	2186	141	50	2056	756	1135	–	24431	280	120	140	0	–	–	–
Woods Pond	7.1	2640	64420	1202	8970	–	34364	437	18275	36550	859	6500	6500	275	–	2016	–	649	–	–	166.5	–	–	75	152	–	–
TOTAL	9.29	3895	99643	1510	10303	1459	44,344	437	25158	50316	1313	8266	8686	461	50	12286	756	5406	139.1	39244	529.6	120	1195	171	152	44	468

	ITEM 462	ITEM 462	ITEM 462	ITEM 462	ITEM 462	ITEM 462	ITEM 464	ITEM 464	ITEM 464	ITEM 464	ITEM 465	ITEM 465	ITEM 465	ITEM 465	ITEM 466	ITEM 466	ITEM 466	ITEM 466	ITEM 466	ITEM 466	ITEM 466	ITEM 467	ITEM 481	ITEM 481	ITEM 481	ITEM 481	ITEM 529	ITEM 530
	Conc Box Culv (4'x4')	Conc Box Culv (6'x4')	Conc Box Culv (6'x5')	Conc Box Culv (7'x4')	Conc Box Culv (8'x4')	Conc Box Culv (8'x6')	RCP SEW (D-LOAD) (18")	RCP SEW (D-LOAD) (24")	RCP SEW (D-LOAD) (36")	RCP SEW (D-LOAD) (48")	MAN H (COMPL) TY A	INLET (COMPL) (DROP) (TY I)	INLET (COMPL) (DROP) (TY IB)	INLET (COMPL) (DROP) (TY II)	CULV HDWLL TY PW-45	CULV HDWLL TY MCW-P-15 MOD	CULV HDWLL TY MCW-P-30 MOD	CULV HDWLL TY MCW-P-45 MOD	CULV HDWLL TY MCW-F1-30	CULV HDWLL TY FW-N	CULV HDWLL TY FW-45	S.E.T. TYII	* P.V.C. PIPE (SCH 40) 4"	* P.V.C. PIPE (SCH 40) 6"	* P.V.C. PIPE (SCH 40) 8"	* P.V.C. PIPE (SCH 40) 12"	* CONC. CURB (TY II) (6 IN)	CONC. DRVWY
	LF	LF	LF	LF	LF	LF	LF	LF	LF	LF	EA	EA	EA	EA	EA	EA	EA	EA	EA	EA	EA	EA	LF	LF	LF	LF	LF	SY
620 Median Pond	–	468	–	–	–	–	1487	–	–	210	–	–	–	–	–	–	–	–	–	–	–	1	324	–	77	–	–	21
LakeCreek Pond 1A	–	–	–	–	–	–	–	–	–	–	–	–	–	–	–	–	–	–	–	–	–	–	144	25	100	–	–	–
LakeCreek Pond 1B	–	–	–	–	–	–	–	–	–	–	–	–	–	–	–	–	–	–	–	–	–	–	114	24	58	–	–	–
LakeCreek Pond 1C	–	–	–	–	–	–	–	–	–	–	–	–	–	–	–	–	–	–	–	–	–	–	120	25	14	–	–	–
Hymeadow Pond 2A	–	–	–	–	–	–	6	–	–	–	1	–	–	–	–	–	–	–	–	–	–	–	138	25	65	–	–	–
Hymeadow Pond 2B	–	–	–	–	–	–	–	–	–	–	–	–	–	–	–	–	–	–	–	–	–	–	63	25	11	–	–	–
Hymeadow Pond 2C	–	–	–	–	–	–	–	–	–	–	–	–	–	–	–	–	–	–	–	–	–	–	156	25	38	–	–	–
Hymeadow Pond 2D1	–	–	–	–	–	–	70	–	–	–	–	–	–	–	–	–	–	–	–	–	–	–	288	25	54	–	–	–
Hymeadow Pond 2D2	–	–	–	–	–	–	735	–	–	–	1	–	–	–	–	–	–	–	–	–	–	–	252	27	5	–	–	–
Pond Springs Pond	44	–	–	–	–	–	–	–	–	–	–	–	–	–	–	–	–	–	–	–	–	–	704	–	357	–	–	42
Pond Springs Detention Pond	–	–	96	–	81	84	–	136	287	563	2	3	1	3	–	2	2	–	–	1	–	–	–	–	–	–	90	30
Woods Pond	–	–	30	175	333	28	66	–	–	–	–	2	–	–	1	–	–	1	1	–	1	6	–	–	–	75	–	37
TOTAL	44	468	126	175	414	112	2364	136	287	773	4	5	1	3	1	2	2	1	1	1	1	7	2303	201	779	75	90	130

	ITEM 531	ITEM 550	ITEM 550	ITEM 550	ITEM 3116	ITEM 3116	ITEM 3116	ITEM 5014	ITEM 5014	ITEM 5014	ITEM 8608
	CONC. WALKWAY (5 IN)	CHAIN LINK FENCE (6FT)	VEH. GATE (DOUBLE) (12FT)	VEH. GATE (DOUBLE) (20FT)	ASPH CONC (TY C) (SURF) (PV 32 MIN)	ASPH CONC. (TY C) 2"	ASPH CONC. (TY C) 1½"	GABIONS (3'X1') (GALV)	GABIONS (3'X3') (GALV)	GABIONS (6'X0.5') (GALV)	SAND FILTER SYSTEM
	SY	LF	EA	EA	TONS	TONS	TONS	CY	CY	CY	EA
620 Median Pond	–	–	–	2	–	–	–	–	20	6.7	1 (60'X64')
LakeCreek Pond 1A	–	–	–	–	–	–	–	6.6	10	–	1 (29'X30')
LakeCreek Pond 1B	–	–	–	–	–	–	–	6.6	10	–	1 (24'X30')
LakeCreek Pond 1C	–	–	–	–	–	–	–	6.6	10	–	1 (25'X30')
Hymeadow Pond 2A	–	–	–	–	–	–	–	6.6	10	–	1 (28'X30')
Hymeadow Pond 2B	–	–	–	–	–	–	–	6.6	10	–	1 (15'X30')
Hymeadow Pond 2C	–	–	–	–	–	–	–	6.6	10	–	1 (29'X30')
Hymeadow Pond 2D1	–	–	–	–	–	–	–	6.6	10	–	1 (30'X37')
Hymeadow Pond 2D2	–	–	–	–	–	–	–	6.6	10	–	1 (30'X47')
Pond Springs Pond	–	1050	2	–	–	8.3	–	–	38	10.3	1 (40'X93')
Pond Springs Detention Pond	46	2060	1	–	12	4.1	7.7	–	–	–	–
Woods Pond	–	2010	1	–	–	56.2	–	–	–	–	–
TOTAL	46	5120	4	2	12	68.6	7.7	52.8	138	17.0	10

NOTES:

( ) INCIDENTAL. FOR CONTRACTOR'S INFORMATION ONLY.

* SUBSIDIARY TO VARIOUS BID ITEMS.

Turner Collie & Braden Inc.
ENGINEERS • PLANNERS • PROJECT MANAGERS

AUSTIN | Job No. 61-99100-012 | File

©1998 TxDOT

US 183
WATER QUALITY AND DETENTION POND SUMMARY SHEET

SCALE: AS NOTED

Designed	FED. RD. DIV. NO.	STATE	FEDERAL AID PROJECT NO.		HIGHWAY NO.
KKY	6	TEXAS	NH 09(556)		US 183
Drawn	STATE DIST. NO.	COUNTY	CONTROL NO.	SECTION NO.	JOB NO.	SHEET NO.
JAM	AUS	WILLIAMSON	0151	05	072	48
Checked						
DLG						

DATE: 04/10/99
JOB No.: 72-07401-022
PATH: t:\ 07401022\drainage\wqptbl2.dgn

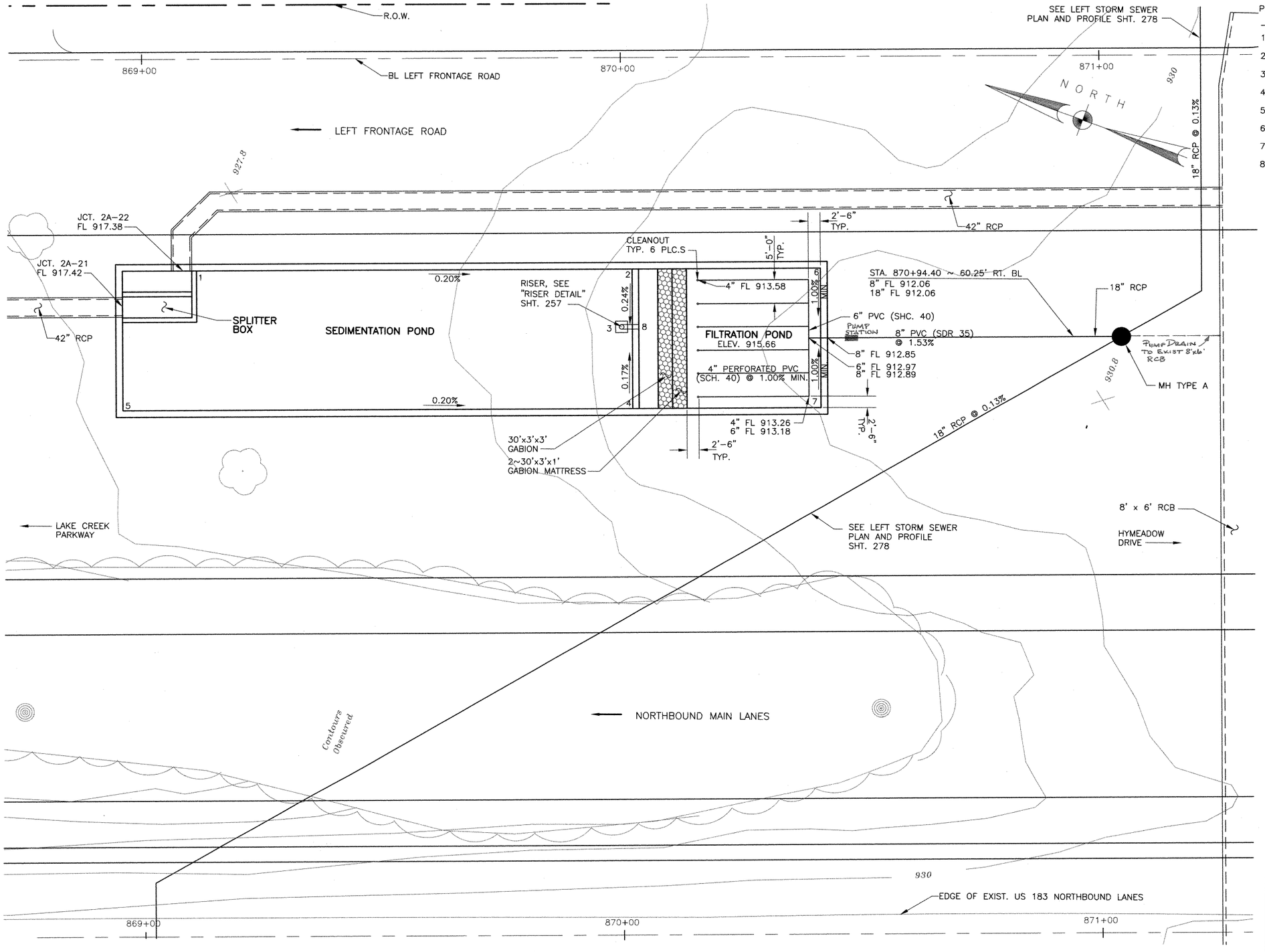

DATE: 04/28/99
JOB NO. 72-07401-022/PONDS/HYMD2A.dwg

POINT LOCATION TABLE

POINT No.	STATION BL LT. FRT. RD.	OFFSET	ELEV. FL
1	869+11.25	45.25' RT.	915.89
2	870+02.25	45.25' RT.	915.71
3	870+00.00	57.67' RT.	915.68
4	870+02.25	75.25' RT.	915.71
5	868+95.75	75.25' RT.	915.92
6	870+41.58	45.25' RT.	915.66
7	870+41.58	75.25' RT.	915.66
8	870+03.58	57.67' RT.	915.66

NOTE:
FOR CURRENT INFORMATION ON GRAVITY & FORCE MAINS IN REFERENCE TO CHANGE ORDER #10, CONTACT CITY OF AUSTIN WATER & WASTEWATER DEPT.

PUMP STATION
TOP ELEV = 932.24
BOT. ELEV = 910.06
FL IN = 912.06
FL OUT = 919.12
C.O. #18

NOTES:

1. SEE WATER QUALITY POND STRUCTURAL DETAILS SHEETS 261a – 261d FOR POND DIMENSIONS AND REINFORCEMENT.
2. SEE STORM SEWER PROFILE SHEET 279 FOR FLOWLINES OF RCPs/RCBs AT SPLITTER BOX.
3. SEE WATER QUALITY POND TYPICAL SECTIONS AND DETAILS, SHEET 257 FOR FILTRATION POND DETAILS.

STATE OF TEXAS
REBECCA A. BILLS
82587
REGISTERED PROFESSIONAL ENGINEER
Rebecca A. Bills
5-3-99

Turner Collie & Braden Inc.
ENGINEERS • PLANNERS • PROJECT MANAGERS

AUSTIN | Job No. 72-07401-022

Texas Department of Transportation

© 1998 TxDOT

HYMEADOW (2A) UNDERGROUND WATER QUALITY POND LAYOUT

SCALE: 1"=10'

Designed	RAB	FED. RD. DIV. NO.	STATE	FEDERAL AID PROJECT NO.				HIGHWAY NO.
Checked	CDB	6	TEXAS	NH 99(556)				U.S.183
Drawn	GWS	STATE DIST. NO.	COUNTY	CONTROL NO.	SECTION NO.	JOB NO.		SHEET NO.
Checked	DLG	14	WILLIAMSON	0151	05	072		252

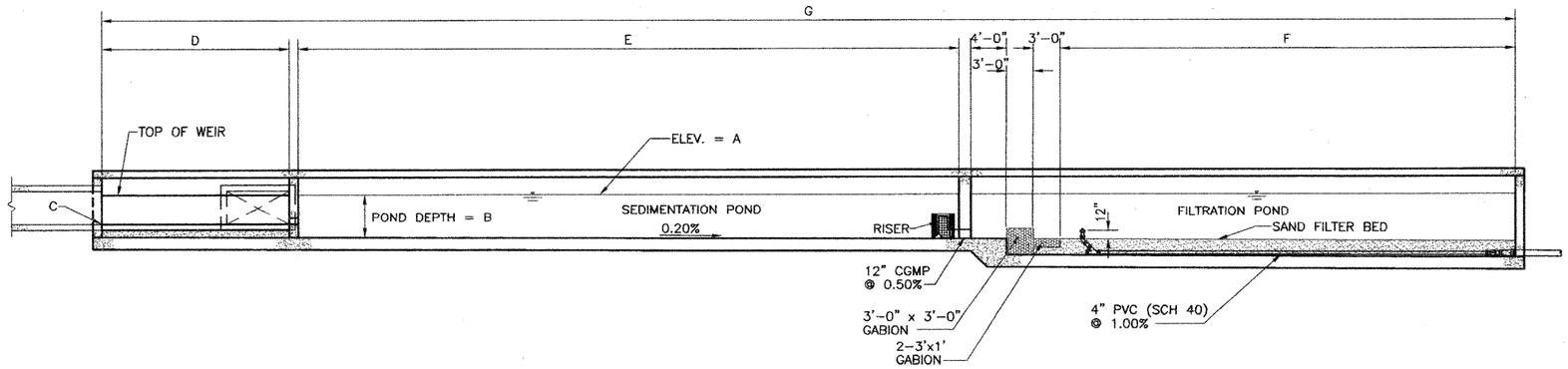

TYPICAL SECTION

SCALE: 1/8" = 1'-0"

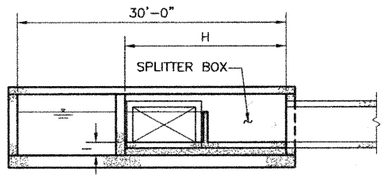

TYPICAL SECTION

SCALE: 1/8" = 1'-0"

POND	A	B	C	D ⚠1	E	F	G	H	I ⚠1	J
1A	917.78	5'-0"	914.28	N/A	96'-0"	29'-0"	158'-4"	18'-0"	N/A	2 3/8"
1B	921.00	5'-0"	918.50	14'-6"	76'-0"	24'-0"	126'-10"	10'-0" ⚠1	2'-6"	2 3/16"
1C	922.75	6'-0"	918.50	14'-6"	65'-0"	25'-0"	116'-10"	18'-0"	1'-9"	2 1/8"
2A	920.92	5'-0"	917.42	14'-6"	91'-0"	28'-0"	145'-10"	10'-0"	1'-6"	2 3/16"
2B	923.49	5'-0"	921.99	14'-6"	43'-0"	15'-0"	84'-10"	10'-0"	3'-6"	1 11/16"
2C	925.90	6'-6"	923.90	14'-6"	76'-0"	31'-0"	133'-10"	10'-0"	4'-6"	1 15/16"
2D1	923.63	5'-6"	920.63	21'-0"	109'-0"	37'-0"	179'-4"	12'-0"	2'-6"	2 5/8"
2D2	921.85	6'-0"	916.85	12'-0"	138'-0"	47'-0"	209'-3"	21'-0"	1'-0"	2 7/8"

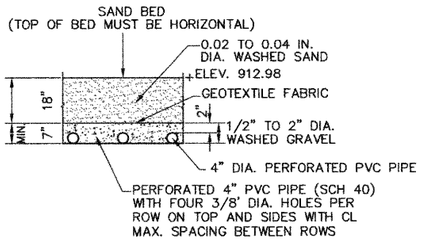

SAND FILTRATION BED SECTION

SCALE: 1/2" = 1'-0"

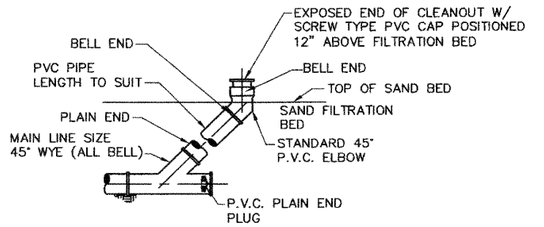

NOTE:
TO BE PLACED ON BEDDING MEETING SPECIFICATION FOR TYPE AND SIZE OF PIPE.

FILTRATION BED CLEAN-OUT

SCALE: 1/2" = 1'-0"

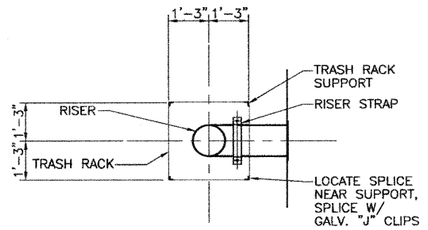

PLAN

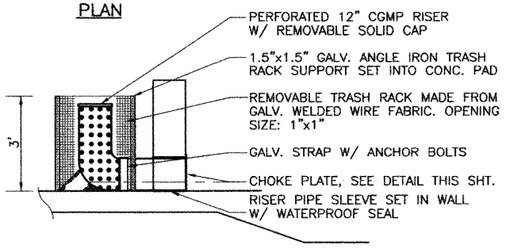

SECTION

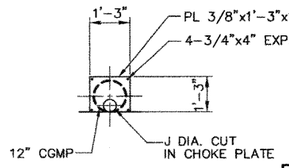

CHOKE PLATE DETAIL

RISER DETAIL

N.T.S.

STATE OF TEXAS
DAVID L. GARRETT
76626
REGISTERED
PROFESSIONAL ENGINEER
6/22/01
For Revision #1 Only

STATE OF TEXAS
REBECCA A. BILLS
82587
REGISTERED
PROFESSIONAL ENGINEER
Rebecca A. Bills
5-3-99

NOTES:

1. SEE WATER QUALITY PONDS STRUCTURAL DETAILS SHEETS 261a – 261d FOR POND DIMENSIONS AND REINFORCEMENT.
2. SEE STORM SEWER PROFILE SHEETS FOR FLOWLINES OF RCPs/RCBs AT SPLITTER BOX.

NO.	DATE	REVISION	APPROV.
4			
3			
2			
⚠1	6/01	CHANGE ORDER 10	

Turner Collie & Braden Inc.
ENGINEERS • PLANNERS • PROJECT MANAGERS

AUSTIN | Job No. 72-07401-022 | File

Texas Department of Transportation

© 1998 TxDOT

UNDERGROUND WATER QUALITY POND TYPICAL SECTIONS AND DETAILS

SCALE: AS NOTED

Designed	CH	FED. RD. DIV. NO.	STATE	FEDERAL AID PROJECT NO.				HIGHWAY NO.
Detailed	DLG	6	TEXAS	NH 99(556)				U.S.183
Checked	RP	STATE DIST. NO.	COUNTY	CONTROL NO.	SECTION NO.	JOB NO.	SHEET NO.	
Quantities	Q.	AUS	WILLIAMSON	0151	05	072	257	

0940103
2001
FILE: C:\07401022\CNGORDER\PLOT\roadway\boards\029257nw.dgn

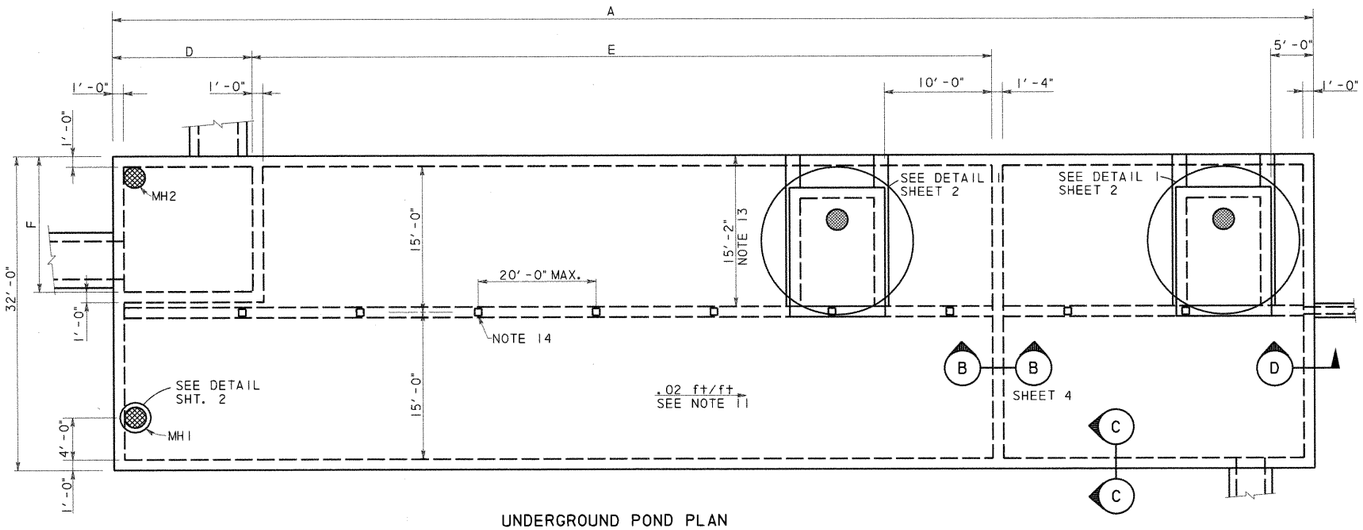

UNDERGROUND POND PLAN

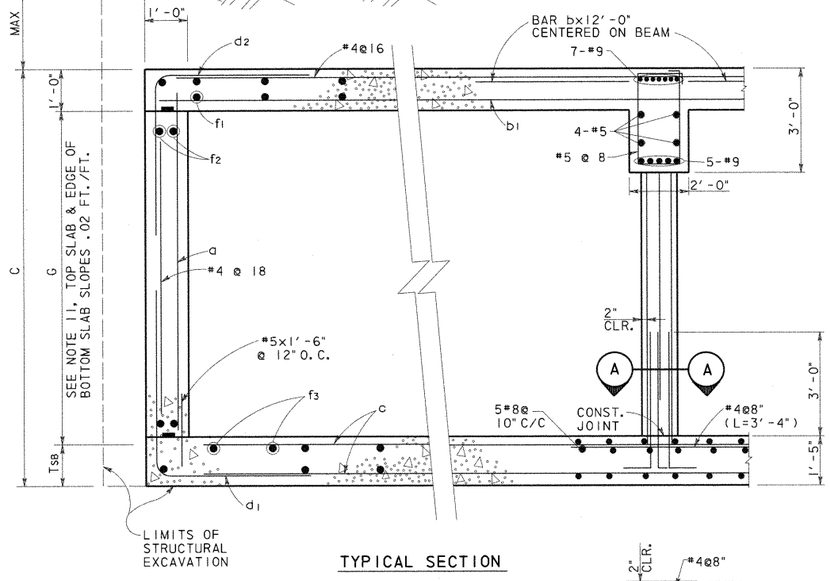

TYPICAL SECTION

SECTION C-C
N. T. S.

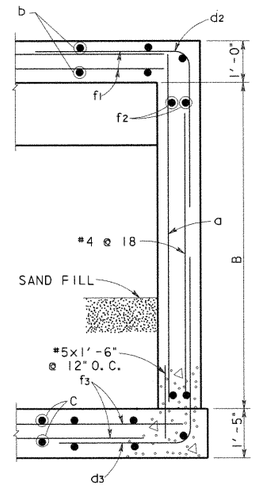

SECTION D-D
N. T. S.

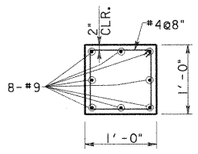

SECTION A-A
SCALE: 1"=1'-0"

UNDERGROUND POND REINFORCING TABLE																		
POND DESIGNATION	BARS a		BARS b		BARS b1		BARS c		BARS d1		BARS d2		BARS d3		BARS f1, f2, f3(#4)			
	SIZE	SPA.	SIZE	SPA.	SIZE	SPA.	SIZE	SPA.	SIZE	SPA.	SIZE	SPA.	SIZE	SPA.	f1 Spa.	f2 Spa.	f3 Spa.	
1A	#6	@12"	#8	@8"	#6	@8"	#8	@10"	#6	@6"	#6	@6"	#6	@6"	@6"	@12"	@7"	
1B	#6	@12"	#8	@8"	#6	@8"	#8	@10"	#6	@6"	#6	@6"	#6	@6"	@6"	@12"	@7"	
1C	#6	@12"	#8	@8"	#6	@8"	#8	@10"	#7	@6"	#6	@6"	#7	@6"	@6"	@12"	@7"	
2A	#6	@12"	#8	@8"	#6	@8"	#8	@10"	#6	@6"	#6	@6"	#6	@6"	@6"	@12"	@7"	
2B	#6	@12"	#8	@8"	#6	@8"	#8	@10"	#6	@6"	#6	@6"	#6	@6"	@6"	@12"	@7"	
2C	#7	@12"	#8	@8"	#6	@8"	#8	@10"	#7	@6"	#6	@6"	#8	@6"	@6"	@12"	@7"	
2D1	#7	@12"	#8	@8"	#6	@8"	#8	@10"	#7	@6"	#6	@6"	#8	@6"	@6"	@12"	@7"	
2D2	#7	@12"	#8	@8"	#6	@8"	#8	@10"	#7	@6"	#6	@6"	#8	@6"	@6"	@12"	@7"	

UNDERGROUND POND DIMENSION TABLE											
POND DESIGNATION	A	B	C	D	E	F	G			MAX FILL	AVERAGE FILL
1A	160'-4"	9'-2"	9'-3"	22'-0"	97'-0"	19'-0"	7'-0"			11'-0"	7'-6"
1B	128'-10"	9'-2"	9'-3"	15'-6"	77'-0"	11'-0"	7'-0"			8'-6"	5'-6"
1C	118'-10"	9'-8"	9'-9"	15'-6"	66'-0"	11'-0"	7'-6"			8'-3"	5'-6"
2A	147'-10"	9'-2"	9'-3"	15'-6"	92'-0"	11'-0"	7'-0"			9'-3"	6'-9"
2B	86'-10"	9'-2"	9'-3"	15'-6"	44'-0"	11'-0"	7'-0"			6'-9"	4'-9"
2C	133'-10"	10'-2"	10'-3"	15'-6"	77'-0"	11'-0"	8'-0"			4'-9"	3'-6"
2D1	181'-4"	10'-2"	10'-3"	22'-0"	110'-0"	13'-0"	8'-0"			11'-10"	7'-3"
2D2	211'-4"	10'-2"	10'-3"	13'-0"	139'-0"	22'-0"	8'-0"			9'-5"	7'-9"

GENERAL NOTES: UNDERGROUND PONDS

1. DESIGNED ACCORDING TO CURRENT AASHTO 1996 STANDARD SPECIFICATIONS.
2. DESIGNED FOR HS20 LOADING AND TO THE MAXIMUM FILL HEIGHT SHOWN.
3. ALL REINFORCING SHALL BE GRADE 60 KSI.
4. ALL CONCRETE SHALL BE CLASS "C".
5. REINFORCING BARS SHALL BE ADJUSTED TO PROVIDE A MINIMUM OF 1½" CLEAR COVER, UNLESS OTHERWISE NOTED.
6. ALL DIMENSIONS ARE IN FEET AND INCHES AND ALL MASS IS IN POUNDS UNLESS OTHERWISE NOTED.
7. SEE POND LAYOUT SHEETS FOR POND ORIENTATION AND LOCATION; PLUS THE ORIENTATION, SIZE AND LOCATION OF INCOMING AND OUTGOING DRAINAGE LINES.
8. WATERSTOPS SHALL BE HYDROPHILIC WATERSTOPS SUCH AS ADEKA MC-2010M.
9. PROVIDE 3" CLEARANCE WHERE CAST AGAINST SOIL.
10. PROVIDE CONSTRUCTION JOINTS IN WALLS AT A MAXIMUM SPACING OF 30 FOOT ON CENTER. MAXIMUM SLAB AREA TO BE PLACED WITHOUT CONSTRUCTION JOINTS IS 3000 SQUARE FEET. SLAB AND WALL CONSTRUCTION JOINTS SHALL ALIGN.
11. SEE POND LAYOUT FOR FLOWLINE. BOTTOM SLAB SHALL PROVIDE A .02 FT/FT SLOPE ALONG THE EDGE OF WALL. PERIMETER WALL HEIGHT (G) SHALL BE CONSTANT.
12. OFF SET RISER TO MISS ROOF SLAB BEAM.
13. AT UNDERGROUND PONDS 2C AND 2D2 THE ACCESS HATCH IS OPPOSITE HAND FROM WHAT IS SHOWN AND IS LOCATED FROM THE OPPOSITE WALL TO AVOID INTERFERENCE WITH THE DRAINAGE DITCH.
14. COLUMN SPACING IS 20.0 FT O.C. MAX. UNLESS NOTED OTHERWISE. THERE WILL BE NO COLUMNS WITHIN THE SPLITTER BOX, WHERE SPLITTER BOX EXTENDS TO THE ROOF BEAM OR BEYOND THE BEAM IS SUPPORTED BY THE SPLITTER BOX WALLS.
15. LAP TOP BARS @ MID SPAN AND BOTTOM BARS @ SUPPORTS.

ESTIMATED QUANTITIES*			
POND DESIGNATION	CONCRETE (CY)	REINFORCING BARS (LBS)	EXCAVATION (CY)
1A	623	144,925	
1B	505	115,855	
1C	476	109,213	
2A	572	131,682	
2B	356	82,752	
2C	536	123,427	
2D1	712	165,990	
2D2	823	191,615	

* QUANTITIES FOR CONTRACTOR'S ESTIMATE ONLY. ALL ITEMS ARE SUBSIDIERY TO THE POND ITEM.

STATE OF TEXAS
WILLY R. BURNS
44162
REGISTERED
ENGINEER
4/2/99

NO. DATE REVISION APPROVED

Turner Collie & Braden Inc.
Engineers • Planners • Project Managers

DATE SUTTON JOB NO. 62-14004-011 ADDENDUM

© 1998 Texas Department of Transportation

US 183

WATER QUALITY PONDS
STRUCTURAL DETAILS

SHEET 1 OF 11

Designed	WRB	FED. RD. DIV. NO.	STATE	FEDERAL AID PROJECT NO.				HIGHWAY NO.
Checked		6	TEXAS	NH99(556)				US 183
Drawn	MR	STATE DIST. NO.	COUNTY	CONTROL NO.	SECTION NO.	JOB NO.		SHEET NO.
Checked		14	WILLIAMSON	151	5	072		261a

UGPDTL1.DGN

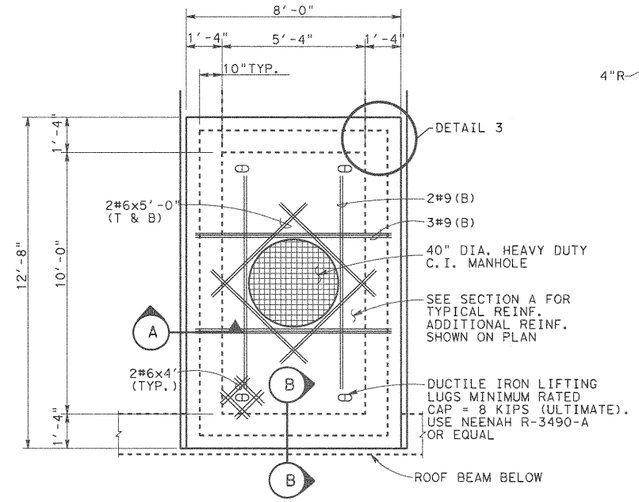

MAINTENANCE ACCESS HATCH

DETAIL 1

SCALE: 3/8" = 1'-0"

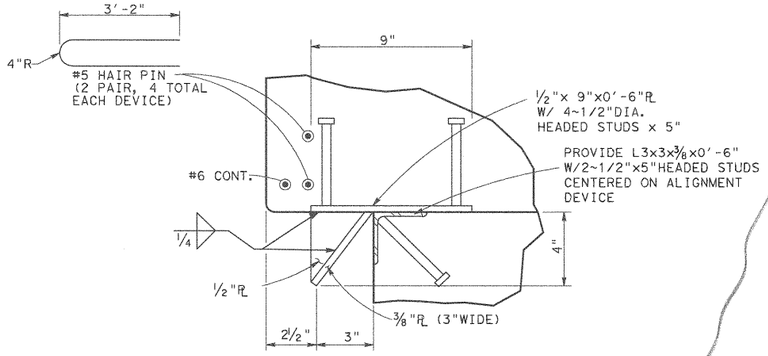

PROVIDE 8 DEVICES (GALV. AFTER FABRICATION) 2 EACH SIDE

DETAIL 2

ALIGNMENT DEVICE

SCALE: 3" = 1'-0"

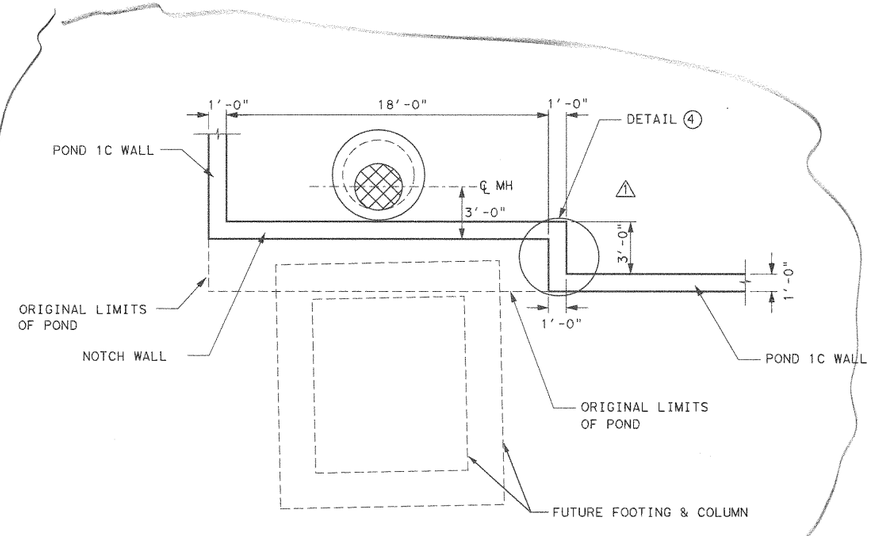

POND 1C MODIFICATION

SCALE: 3" = 1'-0"

SECTION A

SCALE: 1/2" = 1'-0"

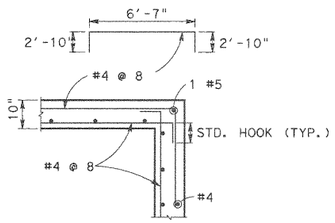

DETAIL 3

HORIZONTAL REINFORCEMENT

SCALE: 1/2" = 1'-0"

ACCESS HATCH		
POND	H1 (±)	ELEV. A
1A	8'-8"	929.20
1B	6'-7"	931.98
1C	6'-7"	931.62
2A	8'-4"	932.04
2B	5'-10"	932.20
2C	4'-10"	933.06
2D1	7'-4"	934.04
2D2	7'-11"	932.50

MANHOLE TABLE		
POND	H2	H3
1A	9'-0"	5'-0"
1B	9'-0"	4'-0"
1C	8'-0"	4'-0"
2A	9'-0"	4'-0"
2B	7'-0"	4'-0"
2C	3'-0"	5'-0"
2D1	10'-0"	4'-0"
2D2	7'-0"	5'-0"

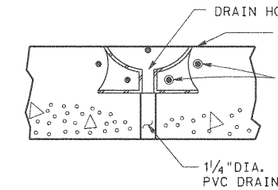

SECTION B

SCALE: 1"= 1'-0"

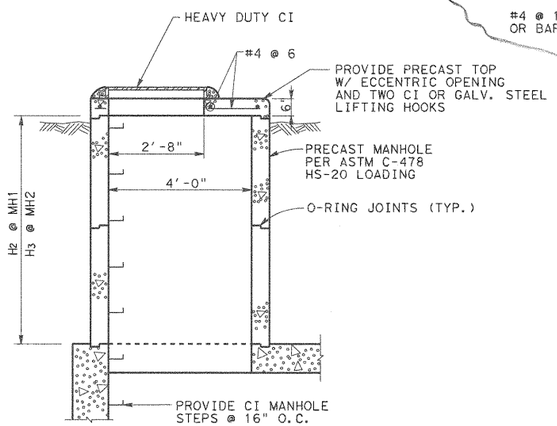

MANHOLE DETAIL

SCALE: 1/2" = 1'-0"

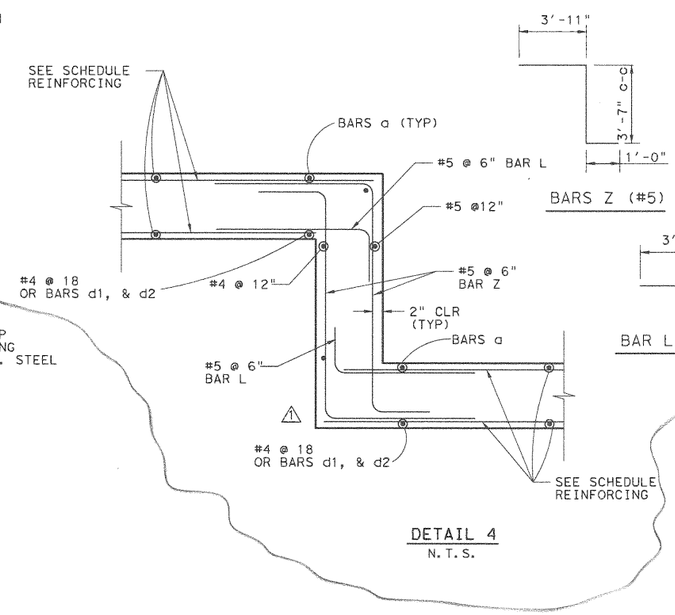

DETAIL 4

N.T.S.

STATE OF TEXAS
WALLY R. BURNS
44162
REGISTERED PROFESSIONAL ENGINEER
Wally R Burns
01/29/01

1	JAN. 26 01	ADD NOTCH	WRB
NO.	DATE	REVISION	APPROVED

Turner Collie & Braden Inc.
Engineers • Planners • Project Managers

TRANSPORTATION | Unit | Job No. 81-07401-024 | Approved

© 1998 Texas Department of Transportation

US 183
WATER QUALITY PONDS
STRUCTURAL DETAILS

SCALE: AS NOTED — SHEET 2 OF 11

Designed	Checked	Drawn	Checked	FED. RD. DIV. NO.	STATE	FEDERAL AID PROJECT NO.				HIGHWAY NO.
WRB		MR		6	TEXAS	NH99(556)				US 183
				STATE DIST. NO.	COUNTY	CONTROL NO.	SECTION NO.	JOB NO.		SHEET NO.
				14	WILLIAMSON	151	5	072		261b

UGPDT2.DGN

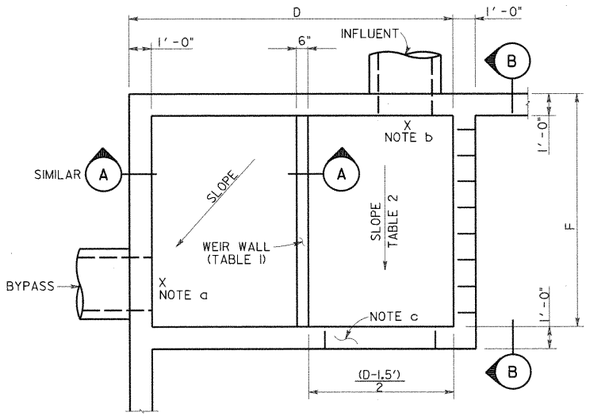

SEE TABLE SHEET I OF II
FOR DIMENSIONS D & F

SPLITTER BOX PLAN (POND 2D2)

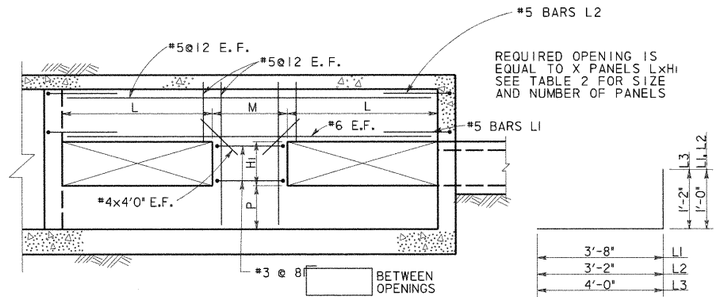

SECTION B

BARS L

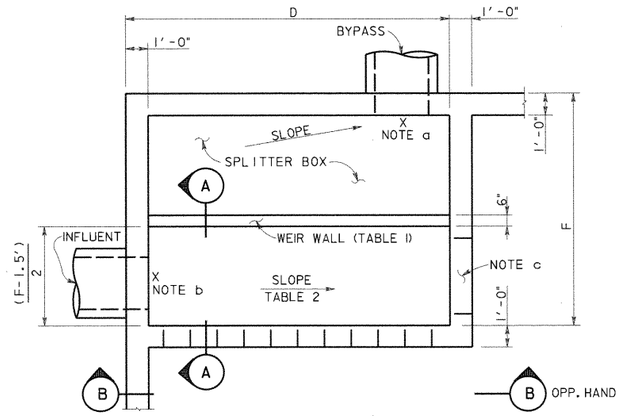

SEE TABLE SHEET I OF II
FOR DIMENSIONS D & F

SPLITTER BOX PLAN (TYPICAL)

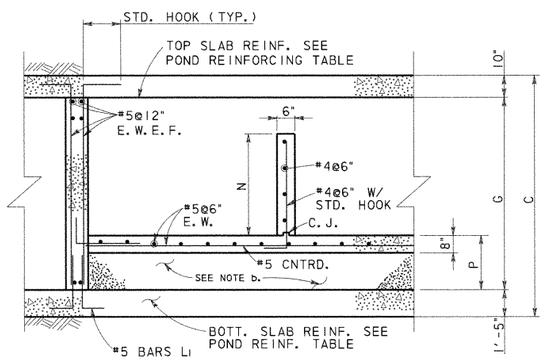

SECTION A

TABLE I BYPASS OUTFALL				
POND	BYPASS LINE ELEVATION	BYPASS WEIR		
		TOP OF WALL ELEV.	N*	P
1A	914.23	917.78	3'-6"	1'-6"
1B	918.44	921.00	2'-6"	2'-6"
1C	918.39	922.75	4'-3"	1'-9"
2A	917.38	920.92	3'-6"	1'-6"
2B	921.92	923.49	1'-6"	3'-6"
2C	923.82	925.90	2'-0"	4'-6"
2D1	920.53	923.63	3'-0"	2'-6"
2D2	916.71	921.85	5'-0"	1'-0"

*N IS MINIMUM DIMENSION, SPLITTER BOX FLOOR SLOPES, HOLD TOP OF WEIR WALL CONSTANT.

TABLE 2 INFLUENT LINE						
POND	INFLUENT ELEV.	SLOPE %	INFLUENT WALL			
			OPENINGS X	M	L	HI
1A	914.28	0.29	4	3'-0"	3'-0"	2'-6"
1B	918.50	0.48	3	2'-9"	3'-0"	1'-6"
1C	918.50	0.85	3	2'-9"	3'-0"	1'-6"
2A	917.42	0.33	3	2'-9"	3'-0"	1'-6"
2B	921.99	0.54	1	0	14'-8"	0'-9"
2C	923.90	0.62	3	2'-9"	3'-0"	1'-0"
2D1	920.63	0.53	3	6'-0"	3'-0"	2'-0"
2D2	916.85	0.78	4	3'-8"	2'-6"	2'-0"

NOTES:

a. SEE TABLE I THIS SHEET FOR OUT FLOW ELEVATION. SLOPE SLAB FROM OVERFLOW WEIR TO OUTFALL.

b. SEE TABLE 2 FOR INFLUENT ELEVATION. TOP OF SPLITTER BOX SLAB TO MATCH INFLOW ELEVATION. AT POND 2D1 THE ELEVATION SHOWN REPRESENTS A 6" DROP FROM THE INFLUENT FLOWLINE. CONTRACTOR MAY USE CEMENT STABILIZED SAND UNDER THE SLAB OR PLACE CONCRETE FOR THE FILL.

c. PROVIDE 3'x .75' OPENING AT BOTTOM OF SPLITTER BOX WALL AT END OF CHANNEL.

STATE OF TEXAS
WILLY R. BURNS
54103
REGISTERED
PROFESSIONAL ENGINEER
4/28/99

NO.	DATE	REVISION	APPROVED

Turner Collie & Braden Inc.
Engineers • Planners • Project Managers

SUTTON — Job No. 62-14004-011

© 1998 Texas Department of Transportation

US 183
WATER QUALITY PONDS
STRUCTURAL DETAILS

SCALE: AS NOTED — SHEET 3 OF 11

Designed	WRB	FED. RD. DIV. NO.	STATE	FEDERAL AID PROJECT NO.				HIGHWAY NO.
Checked		6	TEXAS	NH99(556)				US 183
Drawn	MR	STATE DIST. NO.	COUNTY	CONTROL NO.	SECTION NO.	JOB NO.		SHEET NO.
Checked		14	WILLIAMSON	151	5	072		261c

UGPDT3.DGN

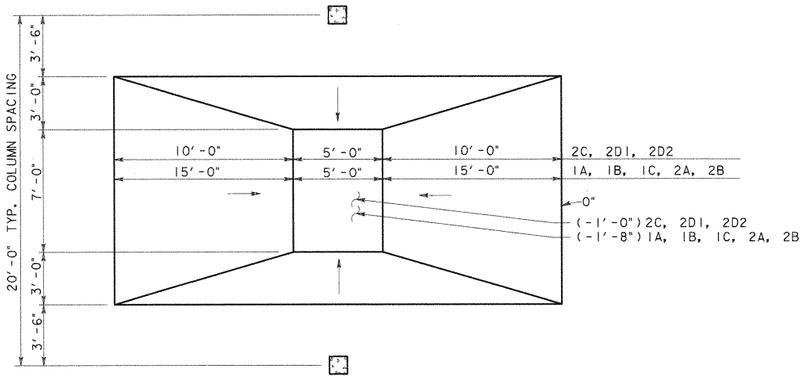

PLAN

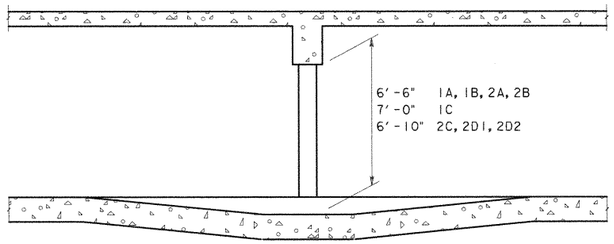

SECTION

REINFORCING LAP SPLICE & EMBEDMENT SCHEDULE						
BAR SIZE	MIN LAP LENGTH		MIN EMBEDMENT LENGTH			
	TOP BARS	OTHER BARS	TOP BARS		OTHER BARS	
			STR.	STD. HOOK	STR.	STD. HOOK
4	24"	20"	17"	9"	12"	7"
5	30"	24"	21"	10"	15"	8"
6	36"	28"	25"	10"	18"	8"
8	58"	41"	42"	15"	30"	12"

PROVIDE ONE CROSS OVER DETAIL FOR E ≤ 80'
PROVIDE TWO CROSS OVER DETAILS FOR E > 80'

CROSS OVER DETAIL
SCALE: 1/4" = 1'-0"

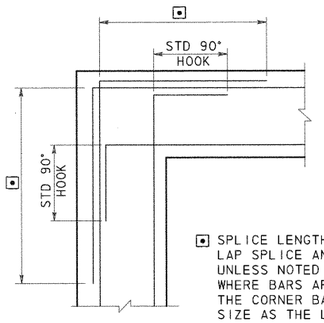

⊡ SPLICE LENGTH SEE REINFORCING LAP SPLICE AND EMBEDMENT TABLES. UNLESS NOTED OTHERWISE ON DWGS WHERE BARS ARE DIFFERENT SIZE THE CORNER BAR SHALL BE SAME SIZE AS THE LARGER BAR

CORNER REINFORCING
FOR WALLS OR GRADE BEAMS

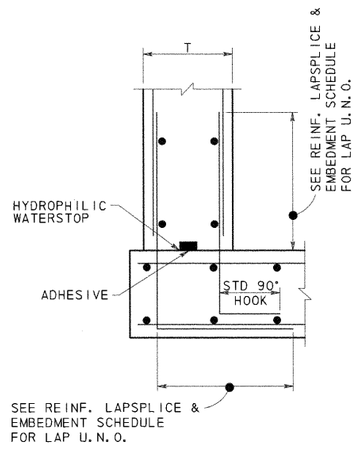

CONSTRUCTION JOINT
BASE OF WALLS

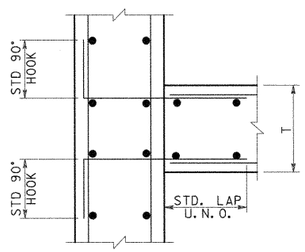

CONSTRUCTION JOINT
WALL INTERSECTIONS

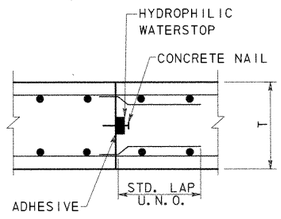

CONSTRUCTION JOINT
SLABS

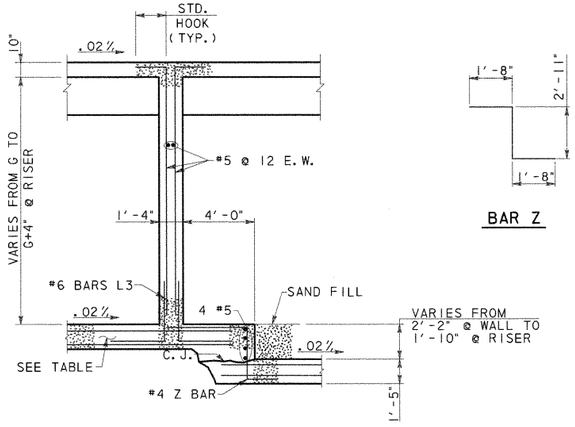

SECTION B

BAR Z

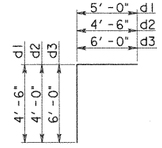

BARS D

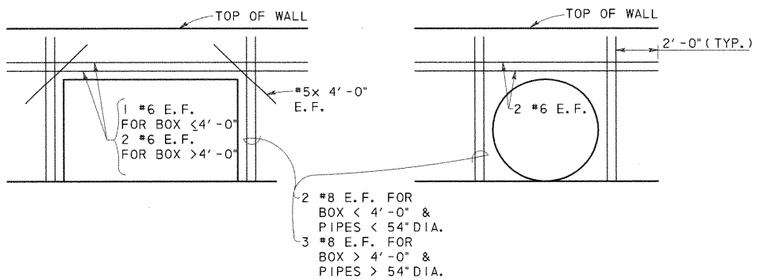

ADDITIONAL REINFORCING @ OPENINGS



NO.	DATE	REVISION	APPROVED

Turner Collie & Braden Inc.
Engineers • Planners • Project Managers

DATE: SUTTON | JOB NO. 62-14004-011 | APPROVED

© 1998 Texas Department of Transportation

US 183
WATER QUALITY PONDS
STRUCTURAL DETAILS

SCALE: AS NOTED | SHEET 4 OF 11

DESIGNED	CHECKED	DRAWN	CHECKED	FED. RD. DIV. NO.	STATE DIST. NO.	STATE	COUNTY	FEDERAL AID PROJECT NO. CONTROL NO.	SECTION NO.	JOB NO.	SHEET NO.	HIGHWAY NO.
WRB		MR		6	14	TEXAS	WILLIAMSON	NH99(556) 151	5	072	261d	US 183

UGPDT4.DGN

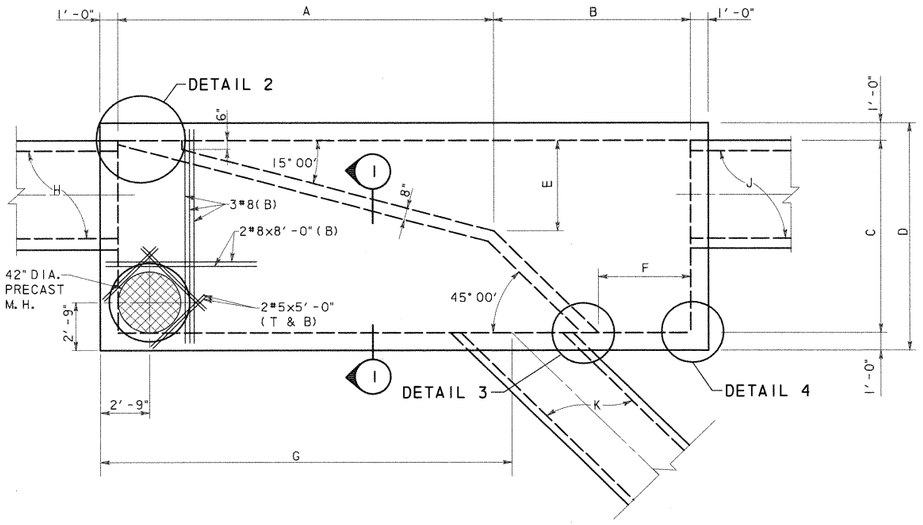

SPLITTER BOX DIMENSION TABLE

BOX LOCATION	A	B	C	D	E	F	G	H	J	K
POND SPRINGS	21'-0"	11'-0"	11'-0"	13'-0"	5'-2"	5'-2"	22'-0"	6x5 RCB	6x5 RCB	4x4 RCB
620 LEFT SIDE	13'-9"	8'-9"	8'-0"	10'-0"	3'-2"	4'-1"	13'-7"	*48" RCP	4x4 RCB	48" RCP

*48" RCP @ 15° SKEW
SEE DRAINAGE DETAIL SHEET.

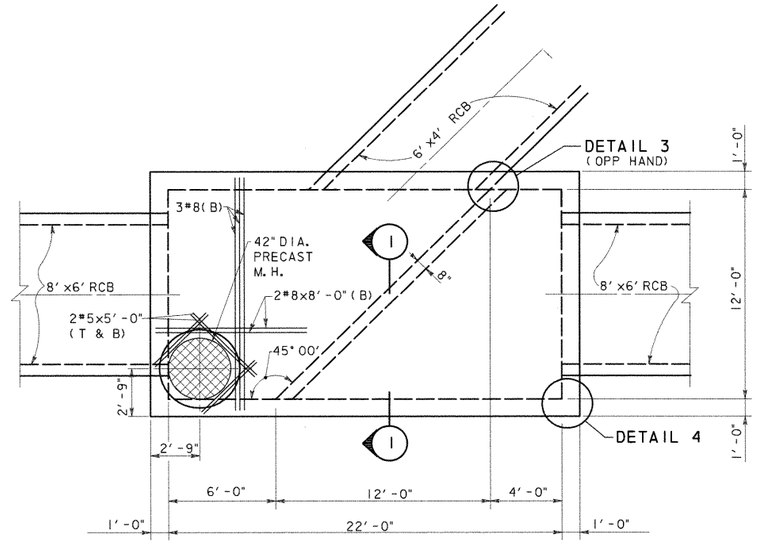

620 RIGHT SIDE
PLAN VIEW
SCALE: 1/4" = 1'-0"

ESTIMATED QUANTITIES			
BOX	CONCRETE (YD^3) *	REINFORCING (LBS) *	STRUCTURAL EXCAVATION (YD)
POND SPRINGS	56.8	7,964	
620 LEFT	32.5	4,096	
620 RIGHT	48.8	5,877	

* QUANTITIES FOR CONTRACTOR'S ESTIMATE ONLY. ALL ITEMS ARE SUBSIDIARY TO THE SPLITTER BOX.

PLAN VIEW
SCALE: 1/4" = 1'-0"

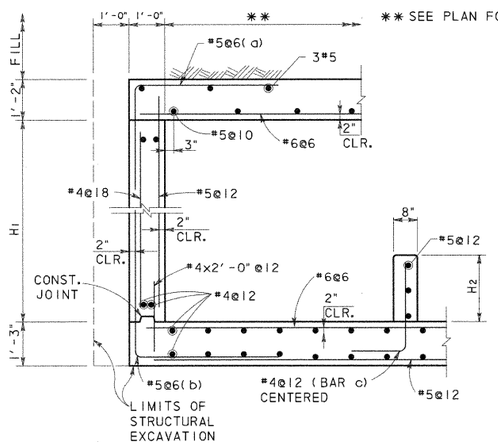

SECTION 1
SCALE: 1/2" = 1'-0"

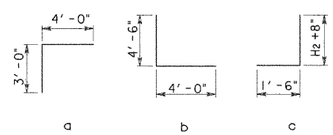

BOX LOCATION	H1	H2
POND SPRINGS	5'-6"	3'-0 1/2"
620 LEFT SIDE	4'-6"	2'-6"
620 RIGHT SIDE	6'-8"	1'-3"

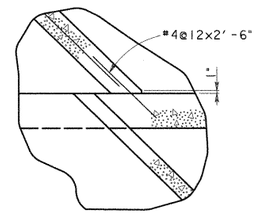

DETAIL 3
SCALE: 1/2" = 1'-0"

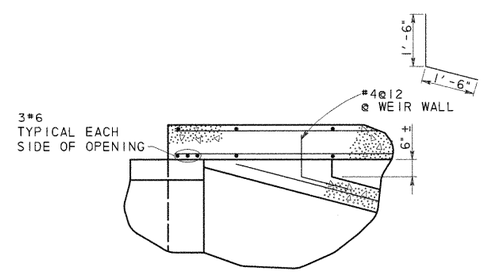

DETAIL 2
SCALE: 1/2" = 1'-0"

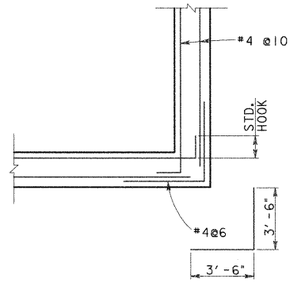

DETAIL 4
SCALE: 1/2" = 1'-0"

GENERAL NOTES:

1. DESIGNED ACCORDING TO CURRENT AASHTO 1996 STANDARD SPECIFICATIONS.
2. DESIGNED FOR HS20 LOADING AND TO THE MAXIMUM FILL HEIGHT SHOWN.
3. ALL REINFORCING SHALL BE GRADE 60 KSI.
4. ALL CONCRETE SHALL BE CLASS "C".
5. ALL DIMENSIONS ARE IN FEET AND INCHES AND ALL MASS IS IN POUNDS UNLESS OTHERWISE NOTED.



NO.	DATE	REVISION	APPROVED

Turner Collie & Braden Inc.
Engineers • Planners • Project Managers

DATE: SUTTON | JOB NO. 62-14004-011 | APPROVED

© 1998 Texas Department of Transportation

US 183
WATER QUALITY PONDS
STRUCTURAL DETAILS

SCALE: AS NOTED | SHEET 6 OF 11

Designed	WRB	FED. RD. DIV. NO.	STATE	FEDERAL AID PROJECT NO.				HIGHWAY NO.
Checked		6	TEXAS	NH99(556)				US 183
Drawn	MR	STATE DIST. NO.	COUNTY	CONTROL NO.	SECTION NO.	JOB NO.		SHEET NO.
Checked		14	WILLIAMSON	151	5	072		261f

UGPDT6.DGN

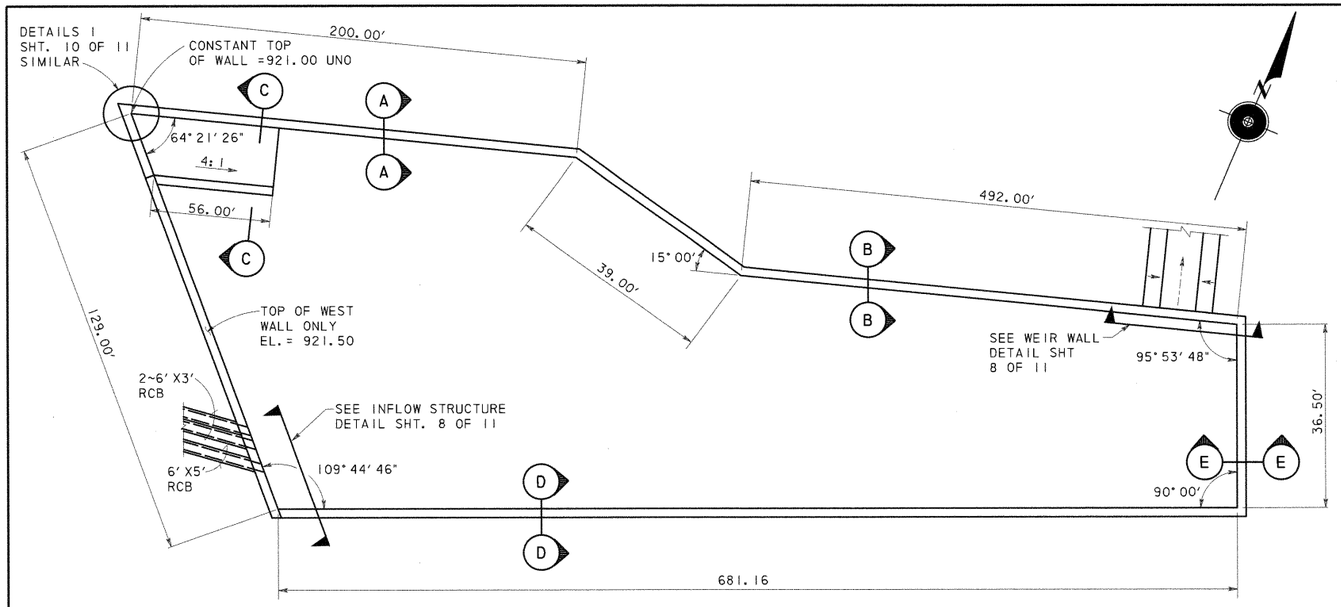

SYSTEM 3 DETENTION POND PLAN

ESTIMATED QUANTITIES (SECTION A)		
CONCRETE (YD^3) *	REINFORCING (LBS) *	** SQ. FT.
2,626	771,900	24,431

* QUANTITIES FOR CONTRACTOR'S ESTIMATE ONLY.

** EXPOSED FACE

*** WALL REINFORCING FOR 32' PANEL (SECT. A)									
A1 ~ 26 #5 @ 15" c-c		A2 ~ 25 #6 @ 15" c-c		A3 ~ 25 #7 @ 15" c-c		A4 ~ 26 #9 @ 15" c-c		A5 ~ 25 #9 @ 15" c-c	
Lgth	lb	Lgth	lb	Lgth	lb	Lgth	lb	Lgth	lb
129	292	145	455	218	928	188	1384	118	837

*** ONE SIDE SHOWN, BARS A BOTH SIDES

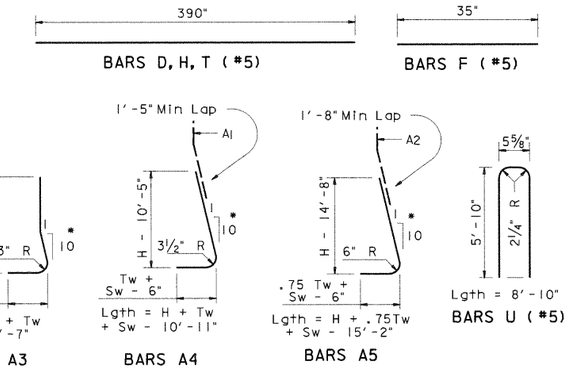

* A BARS ARE STRAIGHT IN FRONT FACE.

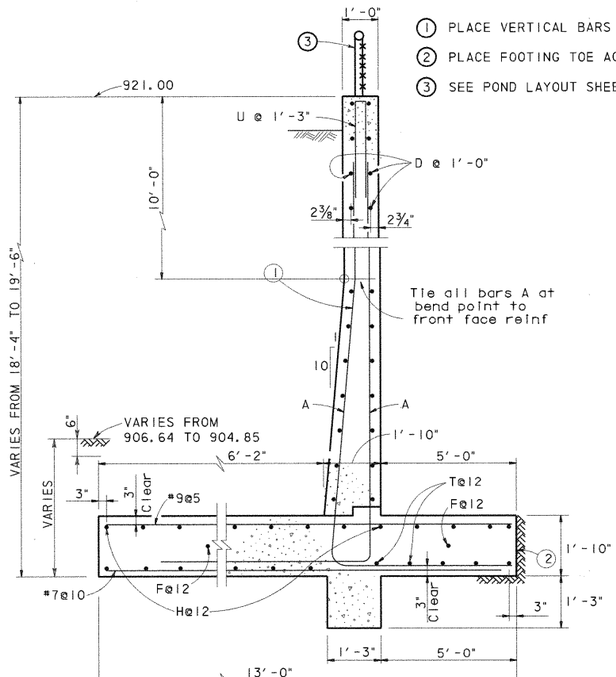

SECTION A-A
SCALE: ½" = 1'-0"

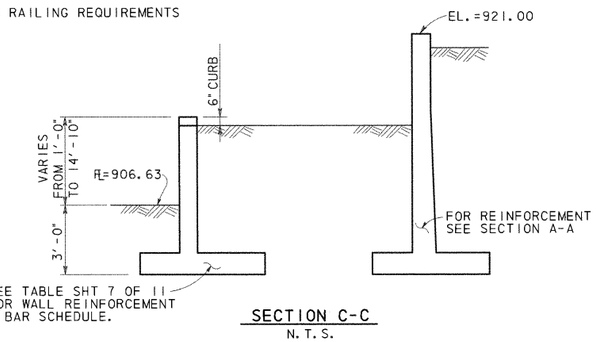

SECTION C-C
N.T.S.

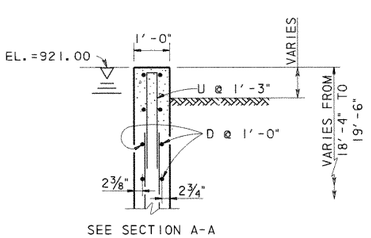

SEE SECTION A-A FOR REST OF DETAIL

SECTION D-D
SCALE: ½" = 1'-0"

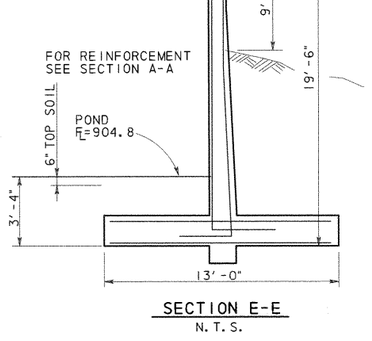

SECTION E-E
N.T.S.

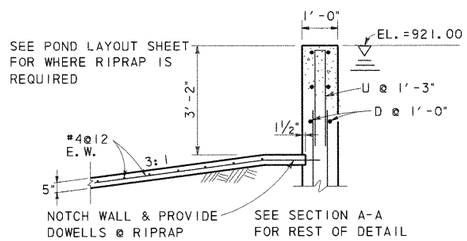

SECTION B-B
SCALE: ½" = 1'-0"

ELEVATION

GENERAL NOTES:

1. DESIGNED ACCORDING TO CURRENT AASHTO 1996 STANDARD SPECIFICATIONS.
2. DESIGNED FOR HS20 LOADING AND EQUIVALENT SOIL PRESSURE OF 60 PCF.
3. ALL REINFORCING SHALL BE GRADE 60 KSI.
4. ALL CONCRETE SHALL BE CLASS "A".
5. REINFORCING BARS SHALL BE ADJUSTED TO PROVIDE A MINIMUM OF 1½" CLEAR COVER.
6. ALL DIMENSIONS ARE IN FEET AND INCHES AND ALL MASS IS IN POUNDS UNLESS OTHERWISE NOTED.
7. CONSTRUCTION JOINT SHALL BE AT 32 FT. MAX. OC. PROVIDE CONSTRUCTION AT 15' MAX FROM EACH CORNER. CORNER CLOSURES SHALL BE PLACED LAST.
8. PROVIDE AN EXPANSION JOINT AFTER MAXIMUM OF 3 PANELS.
9. SEE SHEET 11 OF 11 FOR CONSTRUCTION AND EXPANSION JOINT DETAILS.

STATE OF TEXAS
WALLY R. BURNS
44162
REGISTERED PROFESSIONAL ENGINEER
4/28/99

NO.	DATE	REVISION	APPROVED

Turner Collie & Braden Inc.
Engineers • Planners • Project Managers

SUTTON | Job No. 62-14004-011 | Approved

© 1998 Texas Department of Transportation

US 183
WATER QUALITY PONDS
STRUCTURAL DETAILS

SCALE: AS NOTED | SHEET 7 OF 11

Designed	Checked	Drawn	Checked	FED. RD. DIV. NO.	STATE DIST. NO.	STATE	COUNTY	CONTROL NO.	SECTION NO.	JOB NO.	HIGHWAY NO. / SHEET NO.
WRB		MR		6	14	TEXAS	WILLIAMSON	151	5	072	US 183 / 261g

FEDERAL AID PROJECT NO. NH99(556)

UGPDT7.DGN

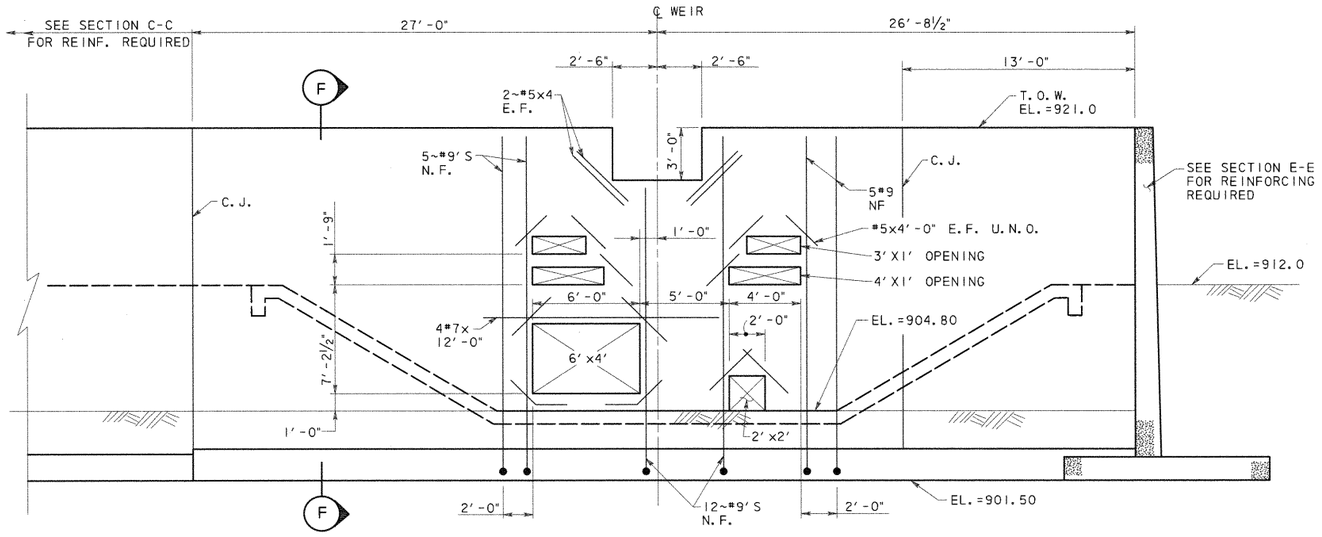

ADDITIONAL REINFORCING SHOWN, SEE SECTION F FOR TYPICAL REINF.

WEIR WALL DETAIL

SCALE: ¼" = 1'-0"

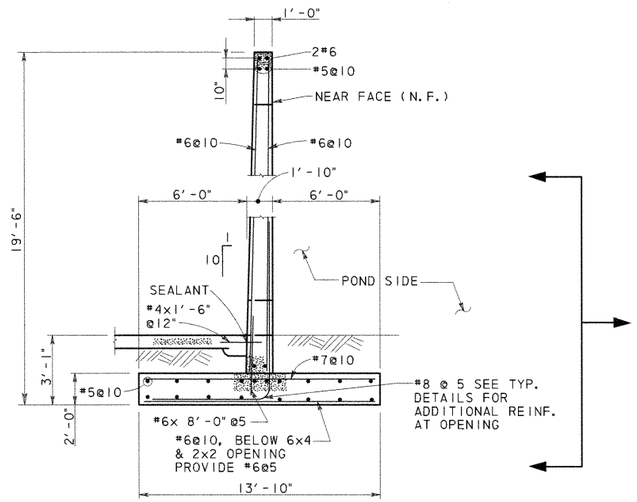

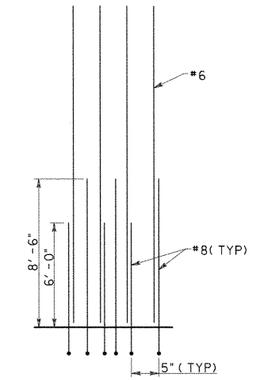

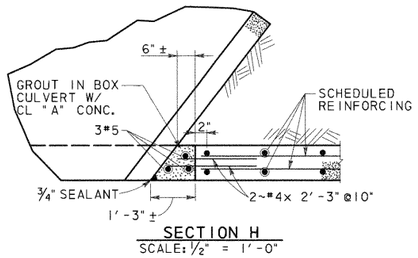

SECTION H

SCALE: ½" = 1'-0"

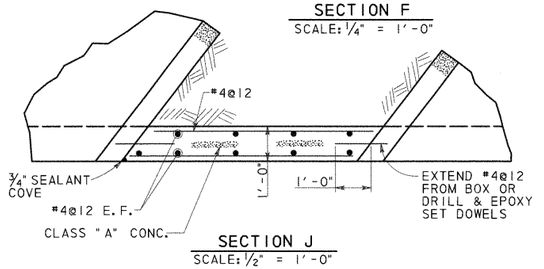

SECTION J

SCALE: ½" = 1'-0"

SECTION F

SCALE: ¼" = 1'-0"

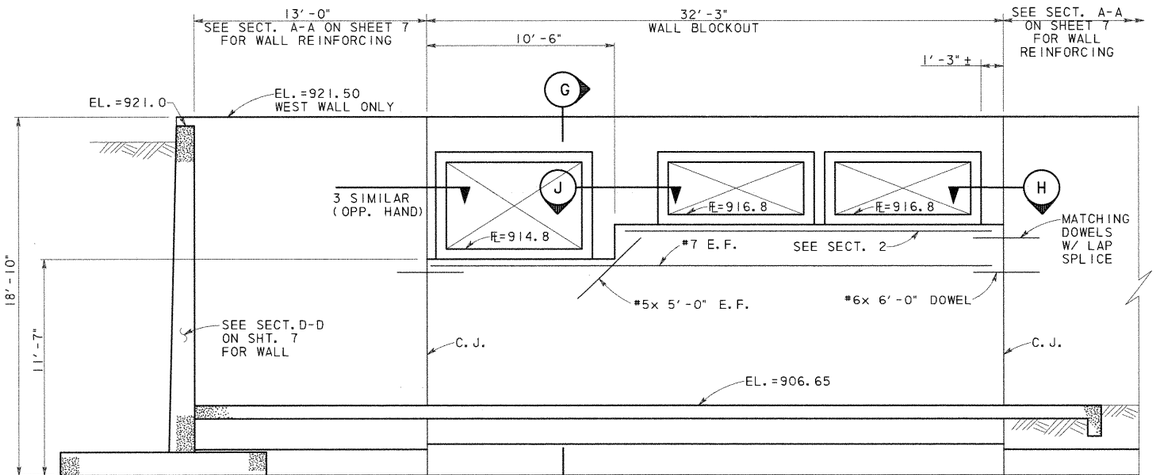

INFLOW STRUCTURE DETAIL

SCALE: ¼" = 1'-0"

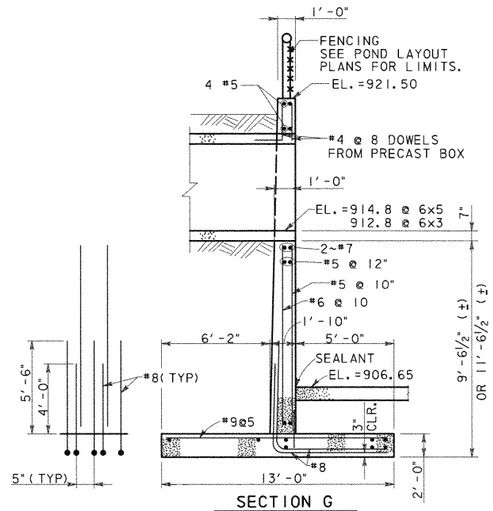

SECTION G

SCALE: ¼" = 1'-0"

STATE OF TEXAS · WALLY R. BURNS · 64262 · REGISTERED PROFESSIONAL ENGINEER

Wally R. Burns 4/28/99

NO.	DATE	REVISION	APPROVED

Turner Collie & Braden Inc.

Engineers • Planners • Project Managers

SUTTON | Job No. 62-14004-011 | Approved

© 1998 Texas Department of Transportation

US 183

WATER QUALITY PONDS STRUCTURAL DETAILS

SCALE: AS NOTED — SHEET 8 OF 11

Designed WRB	Fed. Rd. Div. No. 6	State TEXAS	Federal Aid Project No. NH99(556)	Highway No. US 183
Checked				
Drawn MR	State Dist. No. 14	County WILLIAMSON	Control No. 151	Section No. 5
Checked				Job No. 072

Sheet No. 261h

UGPDT8.DGN

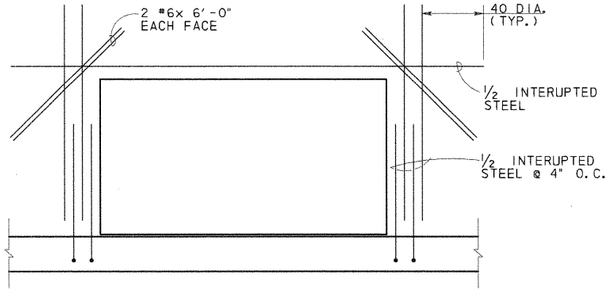

CULVERT OPENINGS

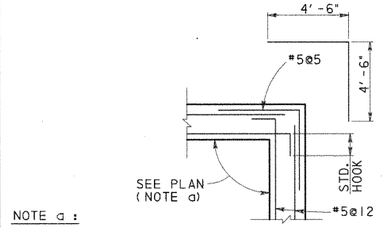

NOTE a :

SEE 620 MEDIAN POND (SHT. 5 OF 11), SYSTEM 3 POND (SHT. 7 OF 11)

DETAIL 1
SCALE: 1/2" = 1'-0"

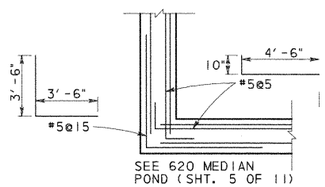

DETAIL 2
SCALE: 1/2" = 1'-0"

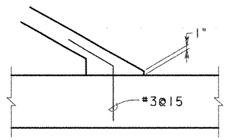

DETAIL 3
SCALE: 3/4" = 1'-0"

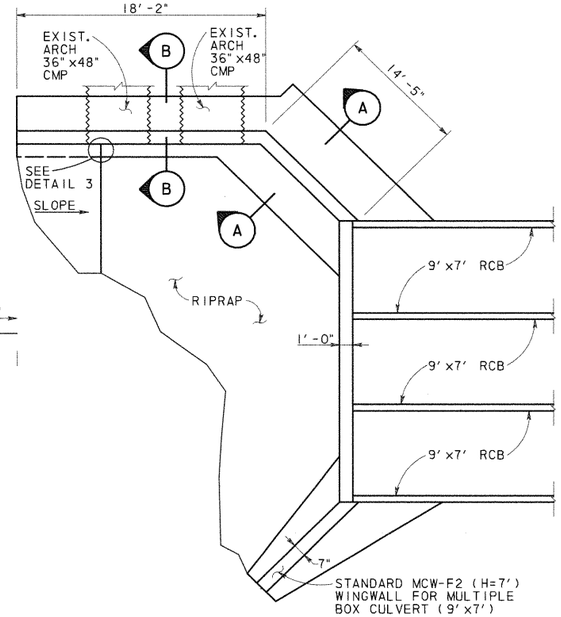

CULVERT @ POND SPRINGS PLAN
N. T. S.

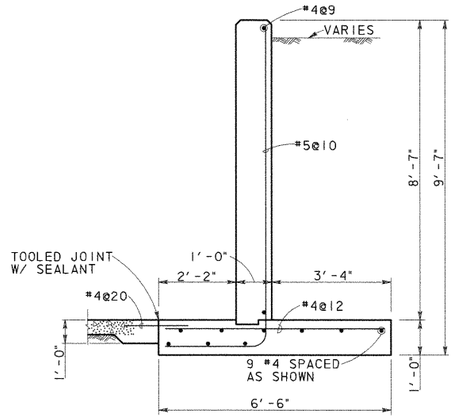

SECTION A-A
SCALE: 1/2" = 1'-0"

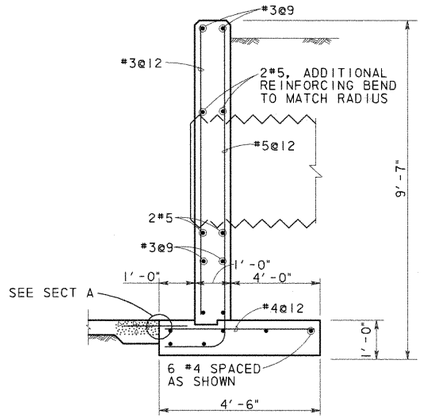

SECTION B-B
SCALE: 1/2" = 1'-0"

POND SPRINGS HEADWALL ESTIMATE QUANTITIES	
CONCRETE (YD^3) *	REINFORCING (LB) *
20.8	672

* QUANTITIES FOR CONTRACTOR'S INFORMATION ONLY. QUANTITIES SHOWN DO NOT INCLUDE THE .5 MCW-F2 WINGWALL OR THE CULVERT CURB.

THE HEADWALL SHALL BE PAID FOR AS MCW-F2(SPL).

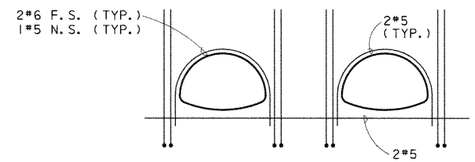

ADDITIONAL REINFORCMENT SHOWN. SEE SECTION B FOR TYPICAL

ELEVATION @ ARCH PIPE
N. T. S.

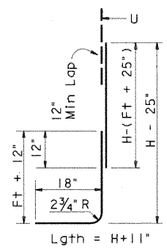

BARS B

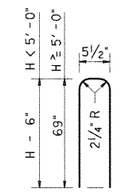

BARS U

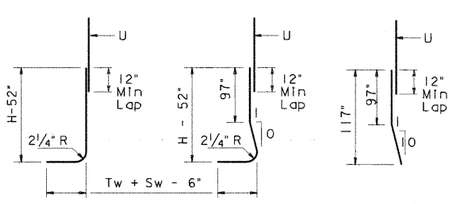

BARS A1

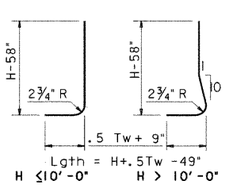

BARS A2

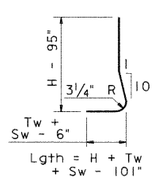

BARS A3

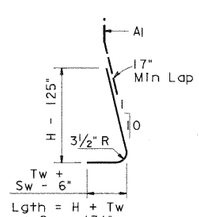

BARS A4

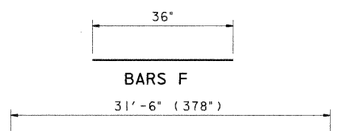

BARS D, H, T

BAR DETAILS POND SPRING

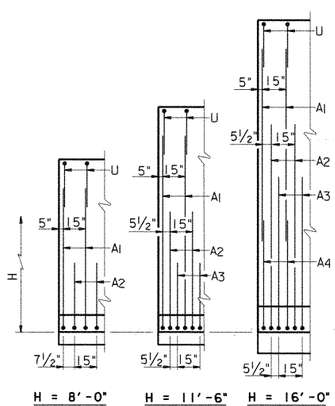

PARTIAL WALL ELEVATIONS
(Showing vertical reinforcing pattern in back face)

STATE OF TEXAS
WILLY R. BURNS
44162
REGISTERED
PROFESSIONAL ENGINEER
6/8/98

NO.	DATE	REVISION	APPROVED

Turner Collie & Braden Inc.
Engineers • Planners • Project Managers

TRANSPORTATION | Job No. 81-07401-024 | Approved

© 1998 Texas Department of Transportation

US 183
MISCELLANEOUS
WATER QUALITY PONDS
STRUCTURAL DETAILS

SCALE: AS NOTED | SHEET 10 OF 11

Designed	WRB	FED. RD. DIV. NO.	STATE	FEDERAL AID PROJECT NO.				HIGHWAY NO.
Checked		6	TEXAS	NH99(556)				US 183
Drawn	MR	STATE DIST. NO.	COUNTY	CONTROL NO.	SECTION NO.	JOB NO.		SHEET NO.
Checked		14	WILLIAMSON	151	5	072		261J

UGPDT10.DGN

AF 41904A

Ultimate Drainage Areas North of R.M. 620 Were Used In Storm Sewer And Water Quality Pond Design

R.M. 620

PECAN PARK

LAKE CREEK PARKWAY

HYMEADOW

Q50 = 447.4 cfs
Outfall 1

Pond 1A

Pond 1B

Pond 1C

Outfall 2
Q100 = 412 cfs
Q50 = 385 cfs

Pond 2A

Pond 2B

Pond 2C

Pond 2D1

Pond 2D2

R.M. 620 Median Pond

Q50 = 800 cfs

Q50 = 89.2 cfs

To Drainage Structures (By Others)

MELLOW MEADOWS DRIVE

LAKESTOP BLVD.

Interim Drainage Areas

US 183

R.M. 620

ANDERSON MILL ROAD

CONTRIBUTING AREA TO LAKE CREEK CHANNEL

A_{TOTAL} = 1133 ACRES
Q_{50} = 4100 cfs *
Q_{100} = 4400 cfs *

* THESE FLOWS ARE BASED ON REGIONAL ANALYSIS OF THE ENTIRE CONTRIBUTING AREA AND DO NOT EQUATE TO THE ACCUMULATED THYSYS FLOWS.

Q50 = 200 cfs

NO.	DATE	REVISION	APPROV.
4			
3			
2			
1			

Turner Collie & Braden Inc.
CONSULTING ENGINEERS
TEXAS AUSTIN/DALLAS/HOUSTON/PORT ARTHUR
COLORADO DENVER

Unit: AUSTIN | Job No. 72-07401-022 | Approved

STATE DEPARTMENT OF HIGHWAYS AND PUBLIC TRANSPORTATION

©1998 TxDOT

DRAINAGE AREA MAP

SCALE: 1" = 200'

Designed DAN	FED. NO. DIV. NO.	STATE	FEDERAL AID PROJECT NO.			HIGHWAY NO.
Checked	6	TEXAS	NH 99(556)			U.S. 183
Drawn WWS	STATE DIST. NO.	COUNTY	CONTROL NO.	SECTION NO.	JOB NO.	SHEET NO.
Checked DAN	14	WILLIAMSON	151	05	072	262a

STATE OF TEXAS
Robert W. Barnett
49537
REGISTERED PROFESSIONAL ENGINEER

Robert W. Barnett
5-09-88

A.F. 61904A

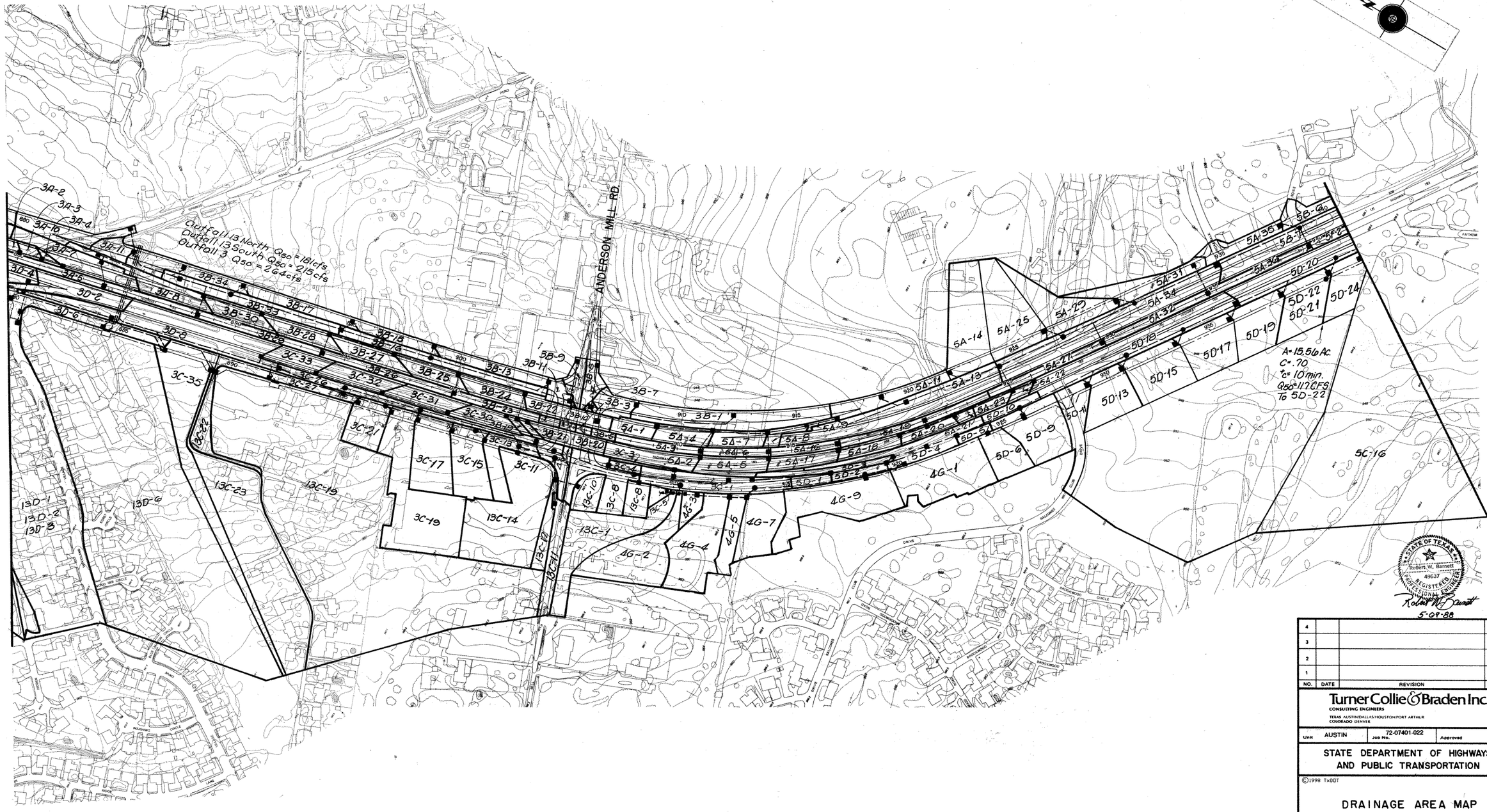

NO.	DATE	REVISION	APPROV.
4			
3			
2			
1			

Turner Collie & Braden Inc.
CONSULTING ENGINEERS
TEXAS AUSTIN/DALLAS/HOUSTON/PORT ARTHUR
COLORADO DENVER

Unit AUSTIN | Job No. 72-07401-022 | Approved

STATE DEPARTMENT OF HIGHWAYS AND PUBLIC TRANSPORTATION

©1998 TxDOT

DRAINAGE AREA MAP

SCALE: 1"=200'

Designed DAN	FED. RD. DIV. NO.	STATE	FEDERAL AID PROJECT NO.			HIGHWAY NO.
Checked	6	TEXAS	NH 99(556)			U.S. 183
Drawn WWS	STATE DIST. NO.	COUNTY	CONTROL NO.	SECTION NO.	JOB NO.	SHEET NO.
Checked DAN	14	WILLIAMSON	151	05	072	202b

A.F. 41804A

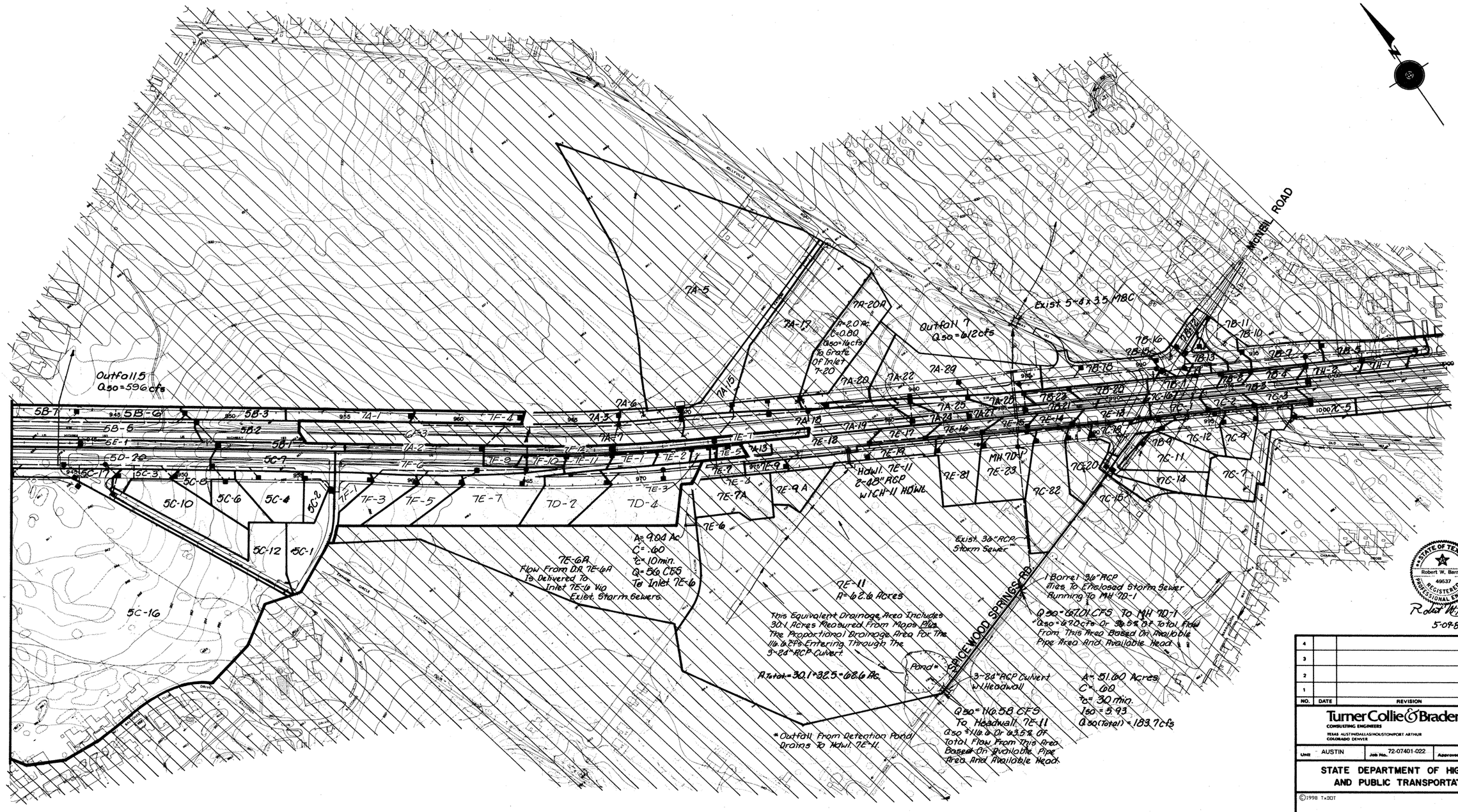
MICHEL ROAD
Outfall 5
Q50=596cfs
Outfall 7
Q50=612cfs
Exist 5-8'x3.5' MBC
7A-5
7A-17
7A-20A
A=2.0 Ac.
C=0.80
Q50=14cfs
To Grate Of Inlet 7-20
7A-15
7A-6
7A-3
7A-7
7A-18
7A-19
7A-20
7A-22
7A-29
7A-25
7A-24
7A-27
7A-26
7A-1
7A-2
7A-13
7F-4
7F-12
7F-11
7F-10
7F-9
7F-8
7F-6
7F-5
7F-3
7F-2
7F-1
7E-1
7E-2
7E-5
7E-7
7E-8
7E-9
7E-9A
7E-9A
7E-6
7E-3
7E-4
7E-7A
7E-10
7E-12
7E-13
7E-14
7E-15
7E-16
7E-17
7E-18
7E-19
7E-11
7E-81
7E-82
7E-23
MH 7D-1
7D-2
7D-4
HDWL 7E-11
2-48" RCP
W/CH-11 HDWL
5B-7
5B-6
5B-5
5B-3
5B-2
5B-1
5E-1
5D-20
5C-17
5C-7
5C-3
5C-8
5C-10
5C-6
5C-4
5C-2
5C-12
5C-1
5C-16
7B-11
7B-10
7B-16
7B-15
7B-13
7B-12
7B-14
7B-18
7B-17
7B-1
7B-2
7B-3
7B-4
7B-5
7B-6
7B-7
7B-8
7B-9
7B-21
7B-22
7B-23
7C-16
7C-1
7C-2
7C-3
1000 7C-5
7C-18
7C-19
7C-20
7C-12
7C-4
7C-11
7C-14
7C-7
7C-82
7C-15
7D-9
7D-11
7D-12
7D-13
7D-14
7D-15
7D-16
7D-17
7D-18
7D-19
7D-20
7D-21
7D-22
7D-23
7D-24
7D-25
7D-26
7D-27
7D-28
7D-29
7D-30
7D-31
7D-32
7D-33
7D-34
7D-35
7D-36
7D-37
7D-38
7D-39
7D-40
7D-41
7D-42
7D-43
7D-44
7D-45
7D-46
7D-47
7D-48
7D-49
7D-50

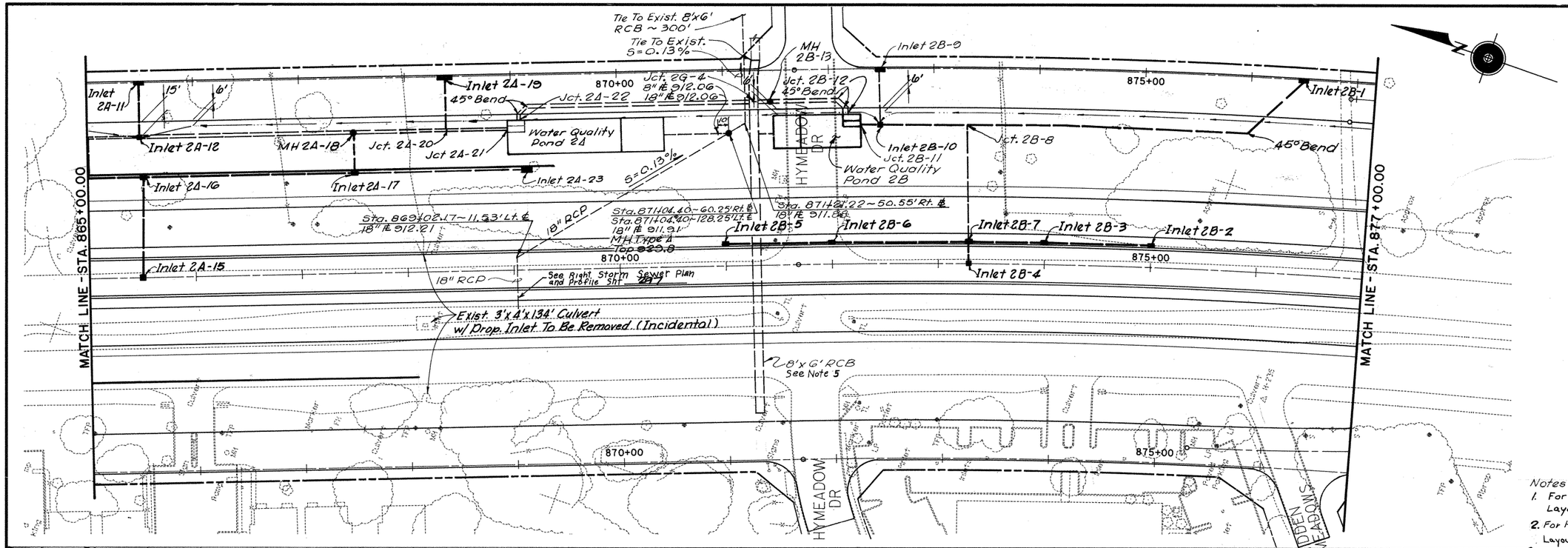

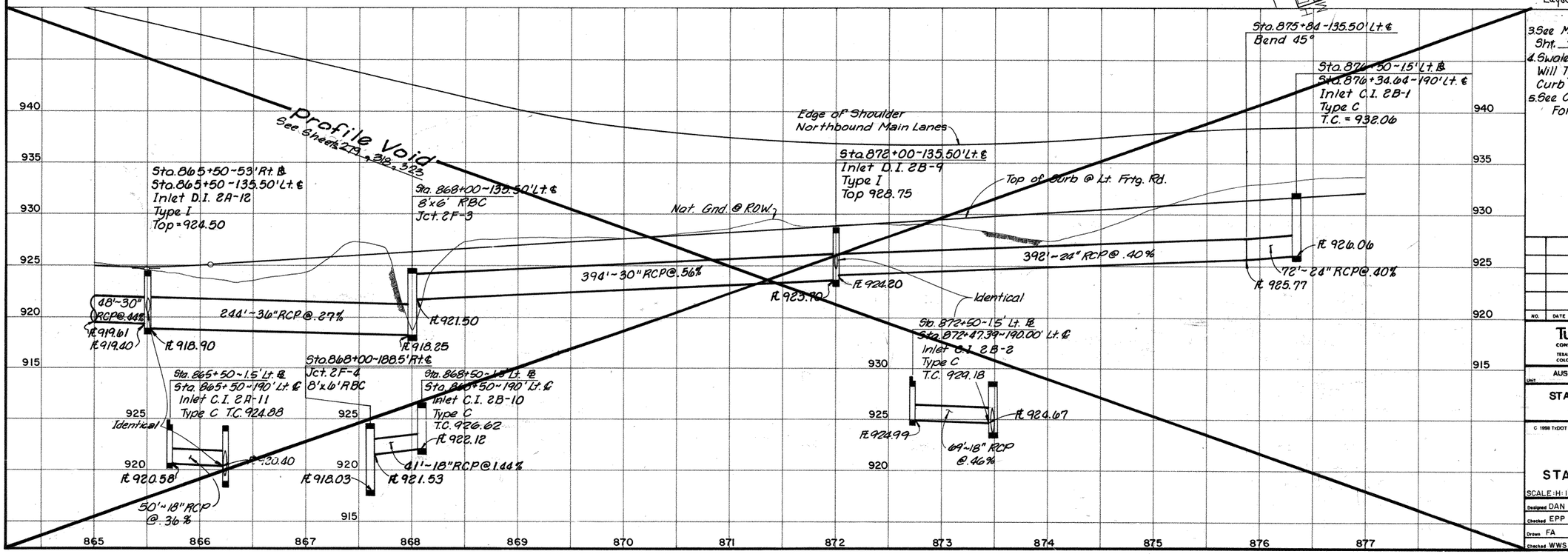

3. See Main Lane Storm Sewer Profiles Sht. 218 For Main Lane Drainage.
4. Swales And Inlets In Separation Area Will Typically Be 6' Behind Face Of Curb Unless Dimensioned Otherwise.
5. See Cross Culvert Profiles Sht. 322 For Additional Information.

Robert W. Barnett
5-09-88

NO.	DATE	REVISION	APPROVED

Turner Collie & Braden Inc.
CONSULTING ENGINEERS
TEXAS AUSTIN/DALLAS/HOUSTON/PORT ARTHUR
COLORADO DENVER

Unit	Job No.	Approved
AUSTIN	72-07401-022	

STATE DEPARTMENT OF HIGHWAYS AND PUBLIC TRANSPORTATION

© 1998 TxDOT

LEFT STORM SEWER PLAN & PROFILE STA. 865+00 TO STA. 877+00

SCALE: H: 1" = 50' V: 1" = 5'

Designed DAN	FED. RD. DIV. NO.	STATE	FEDERAL AID PROJECT NO.				HIGHWAY NO.
Checked EPP	6	TEXAS	NH 99(556)				U.S. 183
Drawn FA	STATE DIST. NO.	COUNTY	CONTROL NO.	SECTION NO.	JOB NO.		SHEET NO.
Checked WWS	14	WILLIAMSON	151	05	072		217

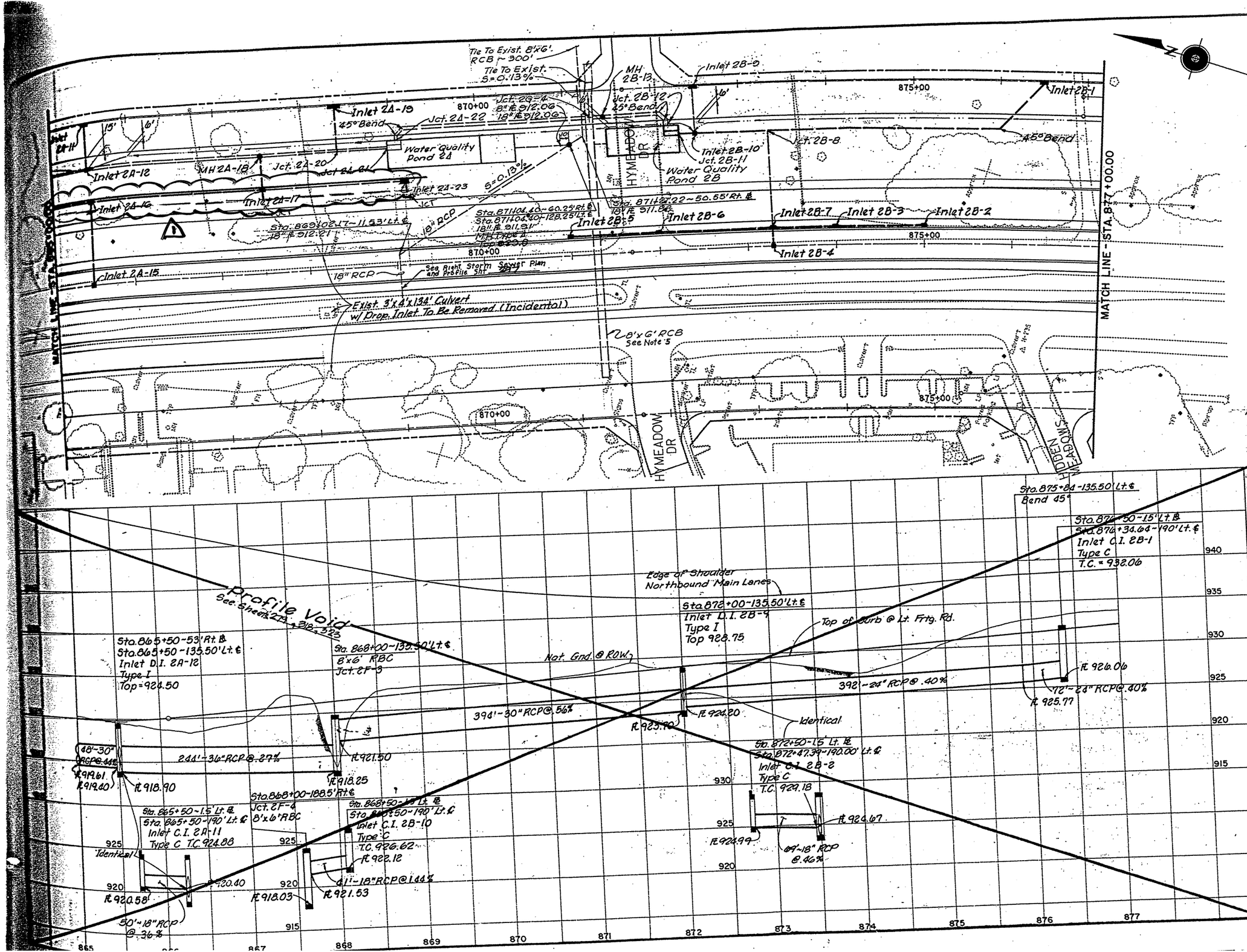

Notes:
1. For Hymeadow (2A) Water Quality Pond Layout See Sht. 252
2. For Hymeadow (2B) Water Quality Pond Layout See Sht. 253
3. See Main Lane Storm Sewer Profiles Sht. 318 For Main Lane Drainage.
4. Swales And Inlets In Separation Area Will Typically Be 6' Behind Face Of Curb Unless Dimensioned Otherwise.
5. See Cross Culvert Profiles Sht. 323 For Additional Information.

STATE OF TEXAS
Robert W. Barnett
49537
REGISTERED PROFESSIONAL ENGINEER
Robert W. Barnett
5-09-88

NO.	DATE	REVISION	APPROVED
1		C-o. 25	

Turner Collie & Braden Inc.
CONSULTING ENGINEERS
TEXAS AUSTIN/DALLAS/HOUSTON/PORT ARTHUR
COLORADO DENVER

AUSTIN | Job No. 72-07401-022 | Approved

STATE DEPARTMENT OF HIGHWAYS AND PUBLIC TRANSPORTATION

C 1996 TxDOT

LEFT STORM SEWER PLAN & PROFILE
STA. 865+00 TO STA. 877+00

SCALE: H: 1"=50' V: 1"=5'

Designed DAN	FED. RD. DIV. NO.	STATE	FEDERAL AID PROJECT NO.				HIGHWAY NO.
Checked EPP	6	TEXAS	NH-99(556)				U.S. 183
Drawn FA	STATE DIST. NO.	COUNTY	CONTROL NO.	SECTION NO.	JOB NO.		SHEET NO.
Checked W.W.S	14	WILLIAMSON	151	05	072		278

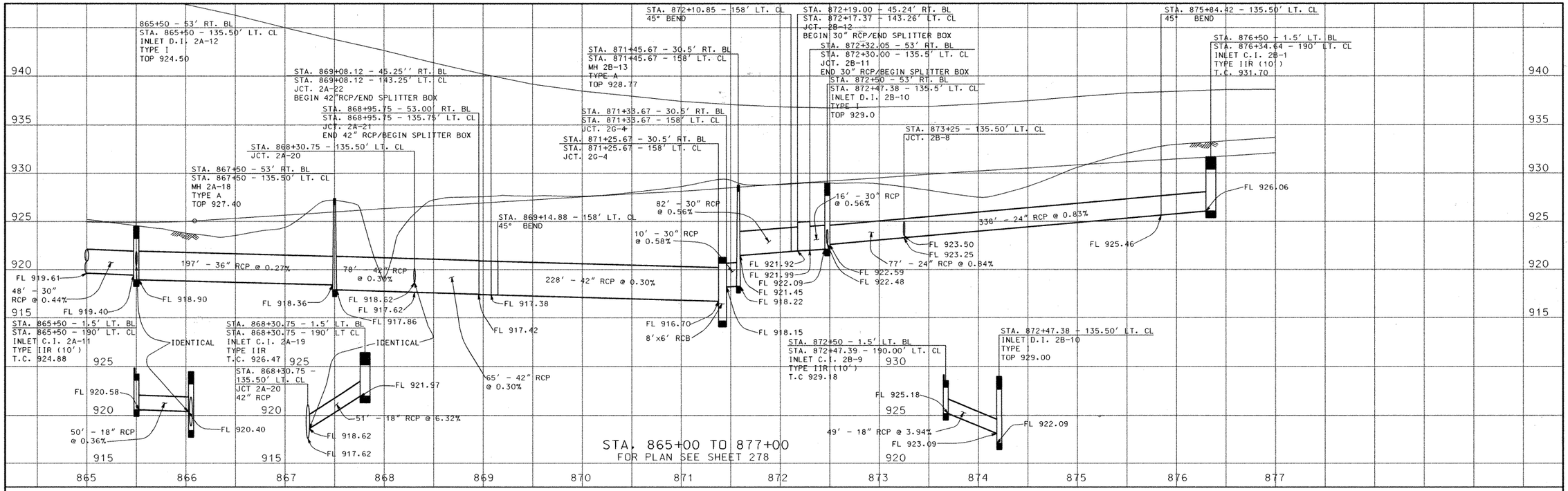

STA. 865+00 TO 877+00

FOR PLAN SEE SHEET 278

STATE OF TEXAS
REBECCA A. BILLS
82587
REGISTERED PROFESSIONAL ENGINEER

Rebecca A. Bills
5-3-99

Turner Collie & Braden Inc.
ENGINEERS • PLANNERS • PROJECT MANAGERS

AUSTIN | 72-07401-022

Texas Department of Transportation

©1998 TxDOT

LEFT STORM SEWER PROFILES

SCALE: H:1"=50', V:1"=5'

Designed KKY	FED. RD. DIV. NO. 6	STATE TEXAS	FEDERAL AID PROJECT NO. NH 99(556)			REFERENCE NO. U.S.183
Checked DLG						
Drawn JAM	STATE DIST. NO. 14	COUNTY WILLIAMSON	CONTROL NO. 0151	SECTION NO. 05	JOB NO. 072	SHEET NO. 279
Checked DLG						

DATE: 03/23/99
JOB No: 72-07401-022
PATH: t:\ 07401022\drainage\pro865l.dgn

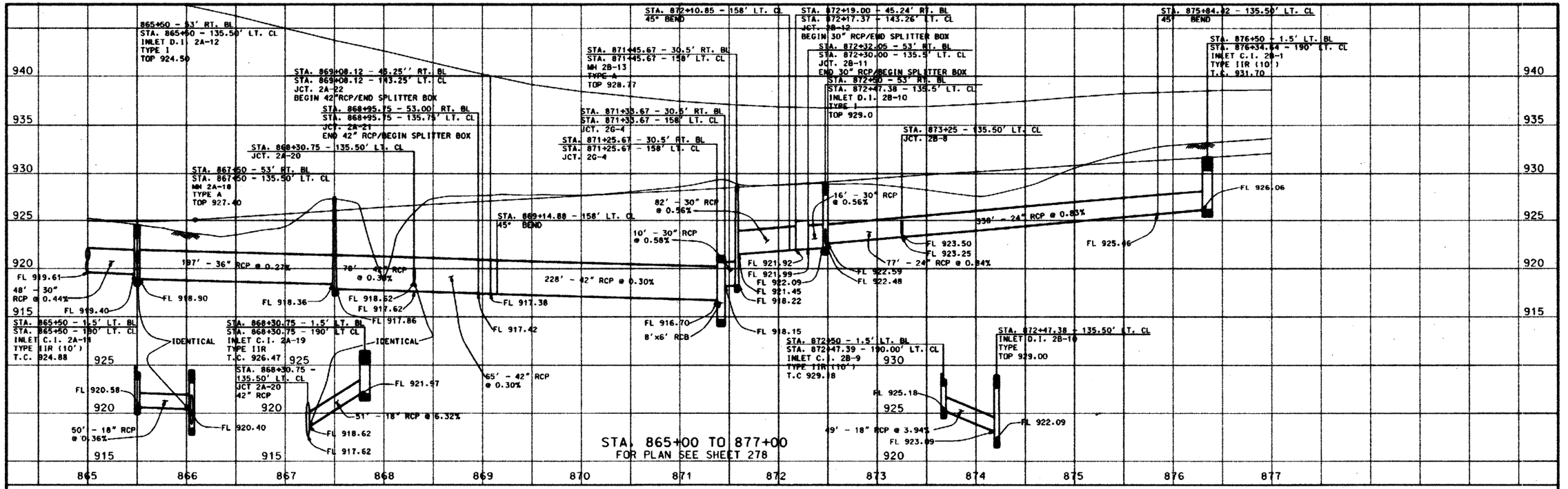

STA. 865+00 TO 877+00
FOR PLAN SEE SHEET 278

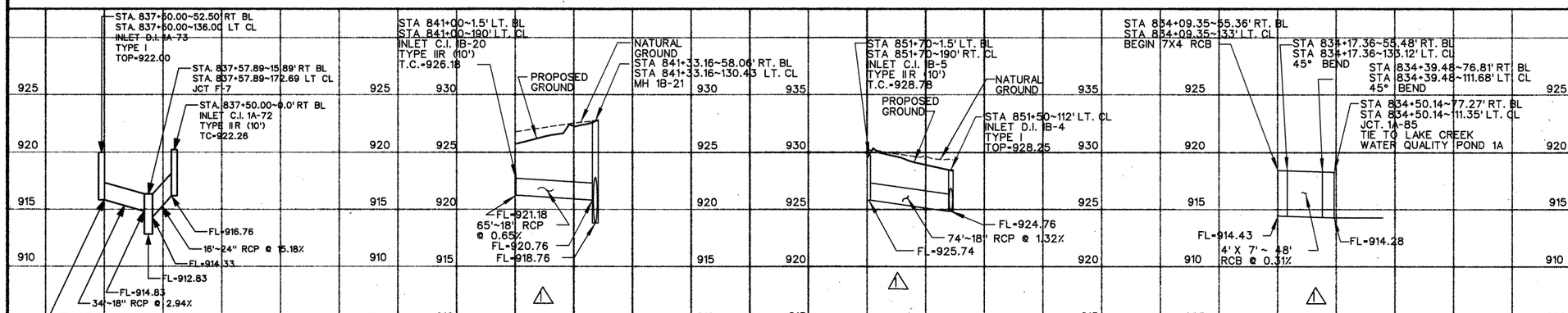

CHANGE ORDER NO. IO

DATE: 03/23/99
JOB No.: 72-07401-022
PATH: (\ 07401022\drainage\vr3850.dgn

MARK E. JONES
81987
REGISTERED PROFESSIONAL ENGINEER
STATE OF TEXAS
10-03-00
Δ only

REBECCA A BILLS
82587
LICENSED PROFESSIONAL ENGINEER
STATE OF TEXAS
9-3-99

Δ CHANGE ORDER NO. IO

Turner Collie & Braden Inc.
ENGINEERS • PLANNERS • PROJECT MANAGERS

AUSTIN | 72-07401-022

Texas Department of Transportation

LEFT STORM SEWER PROFILES

SCALE: H:1"=60', V:1"=6'

KKY		STATE	FEDERAL AID PROJECT NO.				
DLG	6	TEXAS	NH 99(556)				U.S.183
JAM		COUNTY		CONTROL	SECTION	JOB	SHEET NO.
DLG	14	WILLIAMSON	0151	05	072		279A

	ITEM 100	ITEM 110	ITEM 110	ITEM 132	ITEM 132	ITEM 160	ITEM 160	ITEM 164	ITEM 164	ITEM 164	ITEM 168	ITEM 169	ITEM 169	ITEM 247	ITEM 310	ITEM 400	ITEM 400	ITEM 402	ITEM 421	ITEM 423	ITEM 432	ITEM 450	ITEM 450	ITEM 460	ITEM 462	ITEM 462	ITEM 462
	Prep. R.O.W.	EXCAV (CHANNEL)	EXCAV (POND)	EMBANK (TY B)	EMBANK (DC) (TY C) MOD	Furn & Plac Tpsl (Cl 2) (4in)	Furn & Plac Tpsl (Cl 2) (6in)	Cell Fib Mulch Seed	Drill Seed (Temp) (Warm)	Drill Seed (Perm) (Urban) (Clay)	Vegetative Watering	SOIL RET BLNKT (CL1) (TY A)	SOIL RET BLNKT (CL2)(TY G)	Fl Bs (TyD Gr6 Cl 2) (Comp In Plac)	Apsh Mat (MC-30)	Struct Excav (Sewer)	Struct Excav (Culv Large)	TRENCH EXCAV PROTECT	CL C Conc. (misc.)	Pond Wall (Cast-In-Place)	RIPRAP (CONC.) (CL B)	Rail (TY PR)	Rail (TY C4) (S)	CMP (Gal Stl 12in)	Conc Box Culv (2'x4')	Conc Box Culv (4'x4')	Conc Box Culv (6'x4')
	AC	CY	CY	CY	CY	SY	SY	SY	SY	SY	MG	SY	SY	TONS	GAL	CY	CY	LF	CY	SF	CY	LF	LF	LF	LF	LF	LF
620 Median Pond	–	–	7313	–	892	–	2144	–	1072	2144	54	–	–	–	–	4130	–	2165	81.3	9811	5.1	–	1055	35	–	–	468
LakeCreek Pond 1A	–	–	(2053)	–	–	–	–	–	–	–	–	–	–	–	–	107	–	95	–	–	–	–	–	6	–	–	–
LakeCreek Pond 1B	–	–	(1908)	–	–	–	–	–	–	–	–	–	–	–	–	42	–	54	–	–	–	–	–	6	–	–	–
LakeCreek Pond 1C	–	–	(1657)	–	–	–	–	–	–	–	–	–	–	–	–	7	–	10	–	–	–	–	–	6	–	–	–
Hymeadow Pond 2A	–	–	(3048)	–	–	–	–	–	–	–	–	–	–	–	–	115	–	62	–	–	–	–	–	6	–	–	–
Hymeadow Pond 2B	–	–	(1529)	–	–	–	–	–	–	–	–	–	–	–	–	2	–	7	–	–	–	–	–	6	–	–	–
Hymeadow Pond 2C	–	–	(2260)	–	–	–	–	–	–	–	–	–	–	–	–	50	–	34	–	–	–	–	–	6	–	–	–
Hymeadow Pond 2D1	–	–	(3286)	–	–	–	–	–	–	–	–	–	–	–	–	212	–	124	–	–	–	–	–	6	–	–	–
Hymeadow Pond 2D2	–	–	(4381)	–	–	–	–	–	–	–	–	–	–	–	–	1893	–	735	–	–	–	–	–	6	–	–	–
Pond Springs Pond	1.04	93	5300	–	441	–	5056	–	2420	4840	121	1403	–	45	–	1656	–	336	57.8	5002	78	–	–	13	–	44	–
Pond Springs Detention Pond	1.15	1162	22610	308	–	1459	2780	–	3391	6782	279	363	2186	141	50	2056	756	1135	–	24431	280	120	140	0	–	–	–
Woods Pond	7.1	2640	64420	1202	8970	–	34364	437	18275	36550	859	6500	6500	275	–	2016	–	649	–	–	166.5	–	–	75	152	–	–
TOTAL	9.29	3895	99643	1510	10303	1459	44,344	437	25158	50316	1313	8266	8686	461	50	12286	756	5406	139.1	39244	529.6	120	1195	171	152	44	468

	ITEM 462	ITEM 462	ITEM 462	ITEM 462	ITEM 462	ITEM 462	ITEM 464	ITEM 464	ITEM 464	ITEM 464	ITEM 465	ITEM 465	ITEM 465	ITEM 465	ITEM 466	ITEM 466	ITEM 466	ITEM 466	ITEM 466	ITEM 466	ITEM 466	ITEM 467	ITEM 481	ITEM 481	ITEM 481	ITEM 481	ITEM 529	ITEM 530
	Conc Box Culv (4'x4')	Conc Box Culv (6'x4')	Conc Box Culv (6'x5')	Conc Box Culv (7'x4')	Conc Box Culv (8'x4')	Conc Box Culv (8'x6')	RCP SEW (D-LOAD) (18")	RCP SEW (D-LOAD) (24")	RCP SEW (D-LOAD) (36")	RCP SEW (D-LOAD) (48")	MAN H (COMPL) TY A	INLET (COMPL) (DROP) (TY I)	INLET (COMPL) (DROP) (TY IB)	INLET (COMPL) (DROP) (TY II)	CULV HDWLL TY PW-45	CULV HDWLL TY MCW-P-15 MOD	CULV HDWLL TY MCW-P-30 MOD	CULV HDWLL TY MCW-P-45 MOD	CULV HDWLL TY MCW-F1-30	CULV HDWLL TY FW-N	CULV HDWLL TY FW-45	S.E.T. TYII	* P.V.C. PIPE (SCH 40) 4"	* P.V.C. PIPE (SCH 40) 6"	* P.V.C. PIPE (SCH 40) 8"	* P.V.C. PIPE (SCH 40) 12"	* CONC. CURB (TY II) (6 IN)	CONC. DRVWY
	LF	LF	LF	LF	LF	LF	LF	LF	LF	LF	EA	EA	EA	EA	EA	EA	EA	EA	EA	EA	EA	EA	LF	LF	LF	LF	LF	SY
620 Median Pond	–	468	–	–	–	–	1487	–	–	210	–	–	–	–	–	–	–	–	–	–	–	1	324	–	77	–	–	21
LakeCreek Pond 1A	–	–	–	–	–	–	–	–	–	–	–	–	–	–	–	–	–	–	–	–	–	–	144	25	100	–	–	–
LakeCreek Pond 1B	–	–	–	–	–	–	–	–	–	–	–	–	–	–	–	–	–	–	–	–	–	–	114	24	58	–	–	–
LakeCreek Pond 1C	–	–	–	–	–	–	–	–	–	–	–	–	–	–	–	–	–	–	–	–	–	–	120	25	14	–	–	–
Hymeadow Pond 2A	–	–	–	–	–	–	6	–	–	–	1	–	–	–	–	–	–	–	–	–	–	–	138	25	65	–	–	–
Hymeadow Pond 2B	–	–	–	–	–	–	–	–	–	–	–	–	–	–	–	–	–	–	–	–	–	–	63	25	11	–	–	–
Hymeadow Pond 2C	–	–	–	–	–	–	–	–	–	–	–	–	–	–	–	–	–	–	–	–	–	–	156	25	38	–	–	–
Hymeadow Pond 2D1	–	–	–	–	–	–	70	–	–	–	–	–	–	–	–	–	–	–	–	–	–	–	288	25	54	–	–	–
Hymeadow Pond 2D2	–	–	–	–	–	–	735	–	–	–	1	–	–	–	–	–	–	–	–	–	–	–	252	27	5	–	–	–
Pond Springs Pond	44	–	–	–	–	–	–	–	–	–	–	–	–	–	–	–	–	–	–	–	–	–	704	–	357	–	–	42
Pond Springs Detention Pond	–	–	96	–	81	84	–	136	287	563	2	3	1	3	–	2	2	–	–	1	–	–	–	–	–	–	90	30
Woods Pond	–	–	30	175	333	28	66	–	–	–	–	2	–	–	1	–	–	1	1	–	1	6	–	–	–	75	–	37
TOTAL	44	468	126	175	414	112	2364	136	287	773	4	5	1	3	1	2	2	1	1	1	1	7	2303	201	779	75	90	130

	ITEM 531	ITEM 550	ITEM 550	ITEM 550	ITEM 3116	ITEM 3116	ITEM 3116	ITEM 5014	ITEM 5014	ITEM 5014	ITEM 8608
	CONC. WALKWAY (5 IN)	CHAIN LINK FENCE (6FT)	VEH. GATE (DOUBLE) (12FT)	VEH. GATE (DOUBLE) (20FT)	ASPH CONC (TY C) (SURF) (PV 32 MIN)	ASPH CONC. (TY C) 2"	ASPH CONC. (TY C) 1½"	GABIONS (3'X1') (GALV)	GABIONS (3'X3') (GALV)	GABIONS (6'X0.5') (GALV)	SAND FILTER SYSTEM
	SY	LF	EA	EA	TONS	TONS	TONS	CY	CY	CY	EA
620 Median Pond	–	–	–	2	–	–	–	–	20	6.7	1 (60'X64')
LakeCreek Pond 1A	–	–	–	–	–	–	–	6.6	10	–	1 (29'X30')
LakeCreek Pond 1B	–	–	–	–	–	–	–	6.6	10	–	1 (24'X30')
LakeCreek Pond 1C	–	–	–	–	–	–	–	6.6	10	–	1 (25'X30')
Hymeadow Pond 2A	–	–	–	–	–	–	–	6.6	10	–	1 (28'X30')
Hymeadow Pond 2B	–	–	–	–	–	–	–	6.6	10	–	1 (15'X30')
Hymeadow Pond 2C	–	–	–	–	–	–	–	6.6	10	–	1 (29'X30')
Hymeadow Pond 2D1	–	–	–	–	–	–	–	6.6	10	–	1 (30'X37')
Hymeadow Pond 2D2	–	–	–	–	–	–	–	6.6	10	–	1 (30'X47')
Pond Springs Pond	–	1050	2	–	–	8.3	–	–	38	10.3	1 (40'X93')
Pond Springs Detention Pond	46	2060	1	–	12	4.1	7.7	–	–	–	–
Woods Pond	–	2010	1	–	–	56.2	–	–	–	–	–
TOTAL	46	5120	4	2	12	68.6	7.7	52.8	138	17.0	10

NOTES:

( ) INCIDENTAL. FOR CONTRACTOR'S INFORMATION ONLY.

* SUBSIDIARY TO VARIOUS BID ITEMS.

Turner Collie & Braden Inc.
ENGINEERS • PLANNERS • PROJECT MANAGERS

AUSTIN | Job No. 61-99100-012 | File

©1998 TxDOT

US 183
WATER QUALITY AND DETENTION POND SUMMARY SHEET

SCALE: AS NOTED

Designed	FED. RD. DIV. NO.	STATE	FEDERAL AID PROJECT NO.		HIGHWAY NO.
KKY	6	TEXAS	NH 09(556)		US 183
Drawn	STATE DIST. NO.	COUNTY	CONTROL NO.	SECTION NO.	JOB NO.	SHEET NO.
JAM	AUS	WILLIAMSON	0151	05	072	48
Checked						
DLG						

DATE: 04/10/99
JOB No.: 72-07401-022
PATH: t:\ 07401022\drainage\wqptbl2.dgn

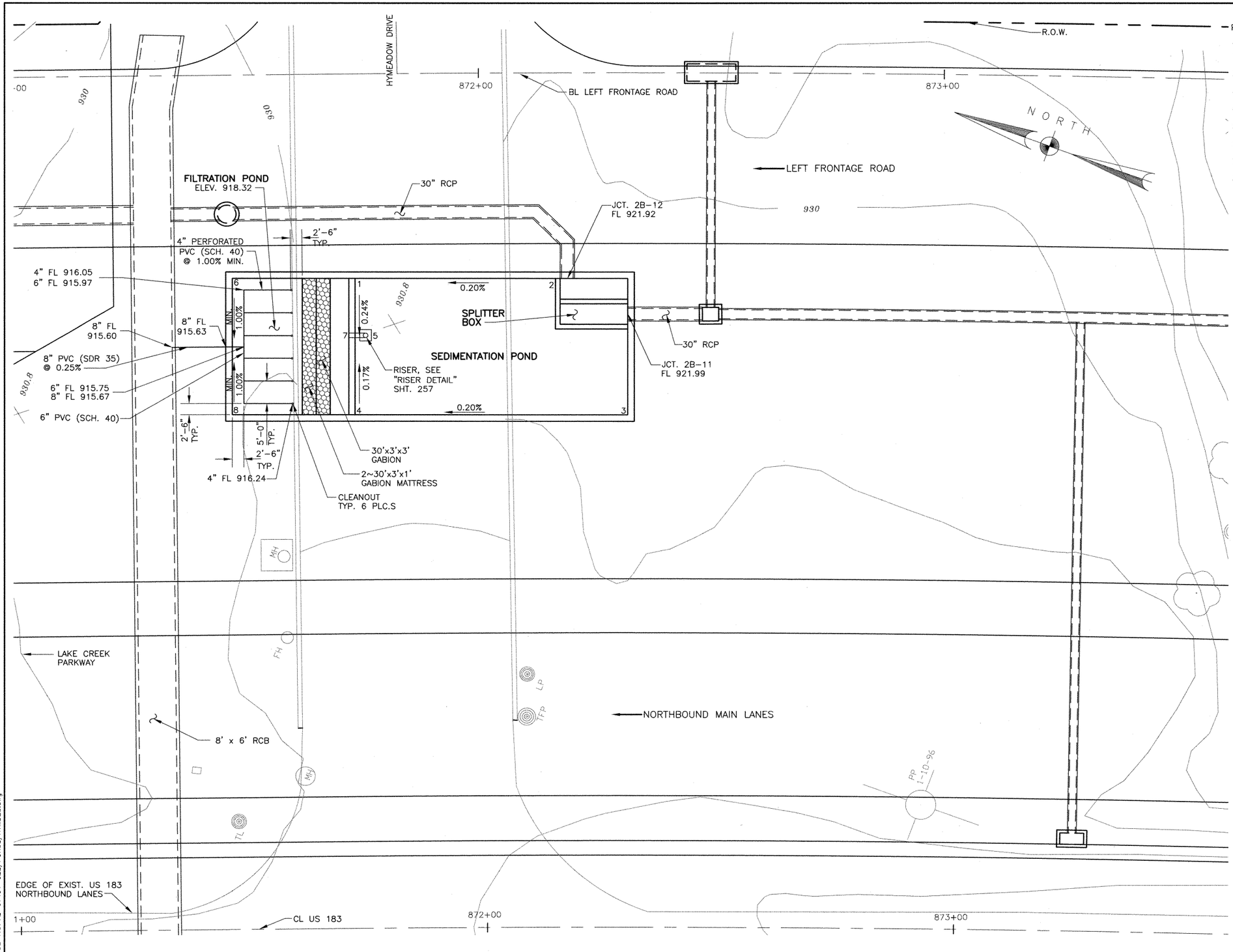

POINT LOCATION TABLE

POINT No.	STATION BL LT. FRT. RD.	OFFSET	ELEV. FL
1	871+73.10	44.96' RT.	918.37
2	872+16.43	45.23' RT.	918.46
3	872+32.05	75.25' RT.	918.49
4	871+72.80	74.96' RT.	918.37
5	871+75.24	57.40' RT.	918.34
6	871+46.72	44.68' RT.	918.32
7	871+71.62	57.36' RT.	918.32
8	871+46.40	74.67' RT.	918.32

NOTE:
FOR CURRENT INFORMATION ON GRAVITY & FORCE MAINS IN REFERENCE TO CHANGE ORDER #10, CONTACT CITY OF AUSTIN WATER & WASTEWATER DEPT.

NOTES:

1. SEE WATER QUALITY POND STRUCTURAL DETAILS SHEETS 261a – 261d FOR POND DIMENSIONS AND REINFORCEMENT.
2. SEE STORM SEWER PROFILE SHEETS 279 FOR FLOWLINES OF RCPs/RCBs AT SPLITTER BOX.
3. SEE WATER QUALITY POND TYPICAL SECTIONS AND DETAILS, SHEET 257 FOR FILTRATION POND DETAILS.

STATE OF TEXAS
REBECCA A. BILLS
82587
REGISTERED
PROFESSIONAL ENGINEER

Rebecca A. Bills
5-3-99

Turner Collie & Braden Inc.
ENGINEERS • PLANNERS • PROJECT MANAGERS

AUSTIN | Job No. 72-07401-022

Texas Department of Transportation

© 1998 TxDOT

HYMEADOW (2B) UNDERGROUND WATER QUALITY POND LAYOUT

SCALE: 1"=10'

Designed	RAB	FED. RD. DIV. NO.	STATE	FEDERAL AID PROJECT NO.				HIGHWAY NO.
Checked	CDB	6	TEXAS	NH 99(556)				U.S.183
Drawn	GWS	STATE DIST. NO.	COUNTY	CONTROL NO.	SECTION NO.	JOB NO.		SHEET NO.
Checked	DLG	14	WILLIAMSON	0151	05	072		253

DATE: 04/28/99
JOB NO. 72-07401-022/PONDS/HYMD2B.dwg

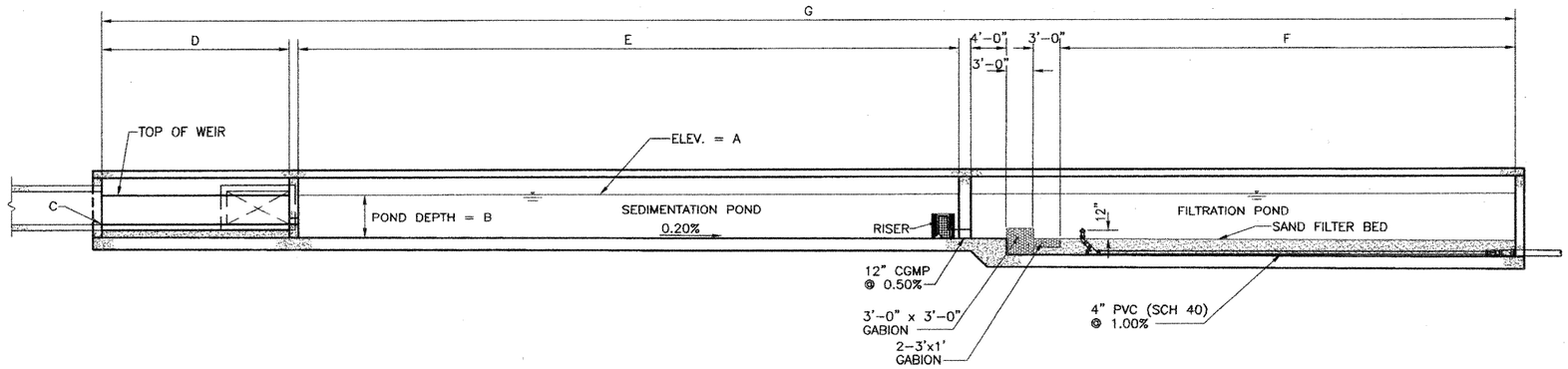

TYPICAL SECTION

SCALE: 1/8" = 1'-0"

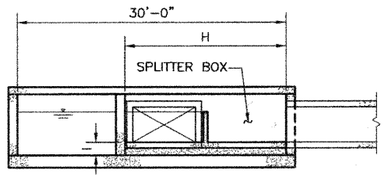

TYPICAL SECTION

SCALE: 1/8" = 1'-0"

POND	A	B	C	D ⚠1	E	F	G	H	I ⚠1	J
1A	917.78	5'-0"	914.28	N/A	96'-0"	29'-0"	158'-4"	18'-0"	N/A	2 3/8"
1B	921.00	5'-0"	918.50	14'-6"	76'-0"	24'-0"	126'-10"	10'-0" ⚠1	2'-6"	2 3/16"
1C	922.75	6'-0"	918.50	14'-6"	65'-0"	25'-0"	116'-10"	18'-0"	1'-9"	2 1/8"
2A	920.92	5'-0"	917.42	14'-6"	91'-0"	28'-0"	145'-10"	10'-0"	1'-6"	2 3/16"
2B	923.49	5'-0"	921.99	14'-6"	43'-0"	15'-0"	84'-10"	10'-0"	3'-6"	1 11/16"
2C	925.90	6'-6"	923.90	14'-6"	76'-0"	31'-0"	133'-10"	10'-0"	4'-6"	1 15/16"
2D1	923.63	5'-6"	920.63	21'-0"	109'-0"	37'-0"	179'-4"	12'-0"	2'-6"	2 5/8"
2D2	921.85	6'-0"	916.85	12'-0"	138'-0"	47'-0"	209'-3"	21'-0"	1'-0"	2 7/8"

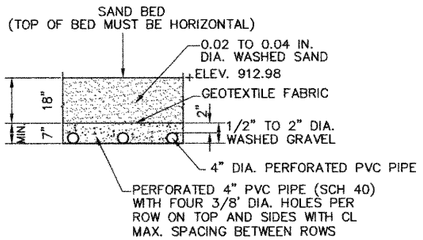

SAND FILTRATION BED SECTION

SCALE: 1/2" = 1'-0"

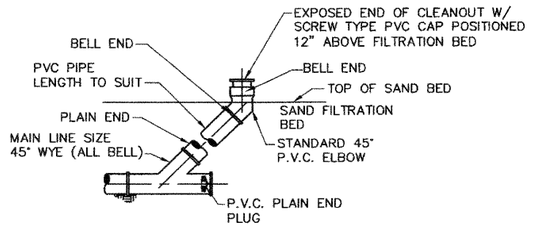

NOTE:
TO BE PLACED ON BEDDING MEETING SPECIFICATION FOR TYPE AND SIZE OF PIPE.

FILTRATION BED CLEAN-OUT

SCALE: 1/2" = 1'-0"

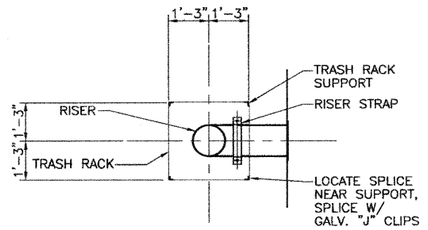

PLAN

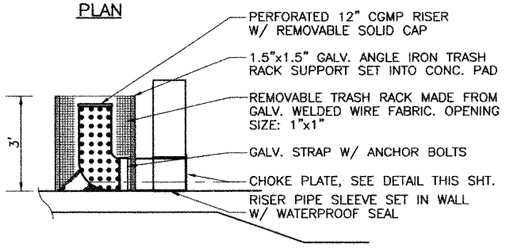

SECTION

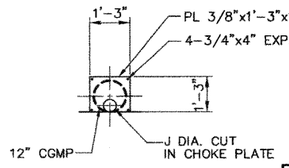

CHOKE PLATE DETAIL

RISER DETAIL

N.T.S.

STATE OF TEXAS
DAVID L. GARRETT
76626
REGISTERED
PROFESSIONAL ENGINEER
6/22/01
For Revision #1 Only

STATE OF TEXAS
REBECCA A. BILLS
82587
REGISTERED
PROFESSIONAL ENGINEER
Rebecca A. Bills
5-3-99

NOTES:

1. SEE WATER QUALITY PONDS STRUCTURAL DETAILS SHEETS 261a – 261d FOR POND DIMENSIONS AND REINFORCEMENT.
2. SEE STORM SEWER PROFILE SHEETS FOR FLOWLINES OF RCPs/RCBs AT SPLITTER BOX.

NO.	DATE	REVISION	APPROV.
4			
3			
2			
⚠1	6/01	CHANGE ORDER 10	

Turner Collie & Braden Inc.
ENGINEERS • PLANNERS • PROJECT MANAGERS

AUSTIN | Job No. 72-07401-022 | File

Texas Department of Transportation

© 1998 TxDOT

UNDERGROUND WATER QUALITY POND TYPICAL SECTIONS AND DETAILS

SCALE: AS NOTED

Designed	CH	FED. RD. DIV. NO.	STATE	FEDERAL AID PROJECT NO.				HIGHWAY NO.
Detailed	DLG	6	TEXAS	NH 99(556)				U.S.183
Checked	RP	STATE DIST. NO.	COUNTY	CONTROL NO.	SECTION NO.	JOB NO.	SHEET NO.	
Quantities	Q.	AUS	WILLIAMSON	0151	05	072	257	

0940103
2001
FILE: C:\07401022\CNGORDER\PLOT\roadway\boards\029257nw.dgn

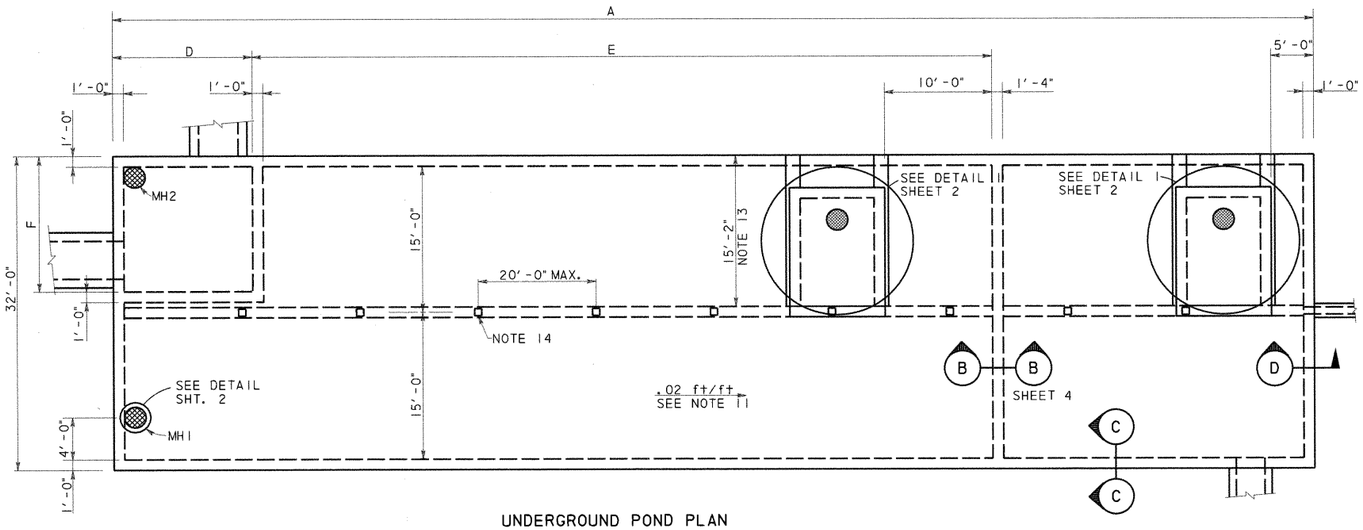

UNDERGROUND POND PLAN

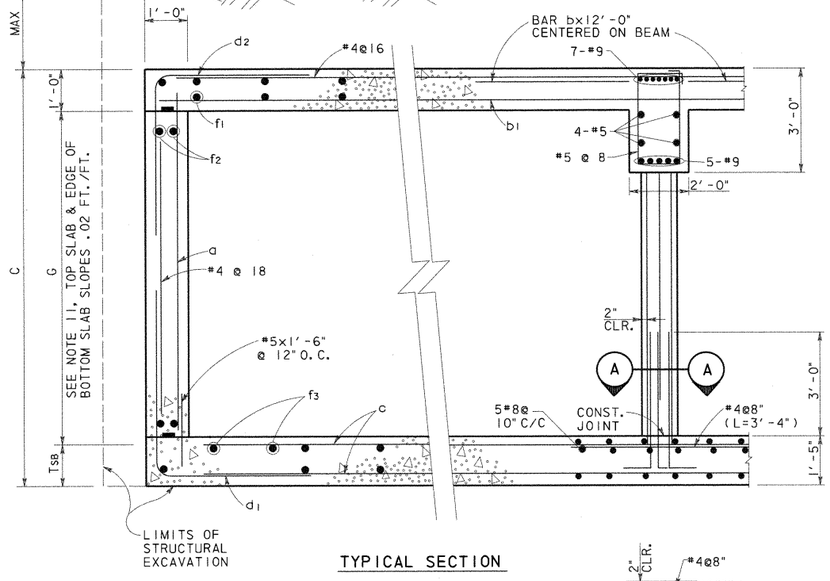

TYPICAL SECTION

SECTION C-C
N. T. S.

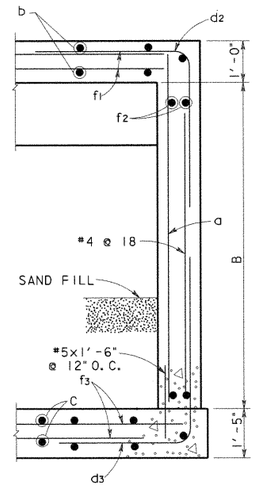

SECTION D-D
N. T. S.

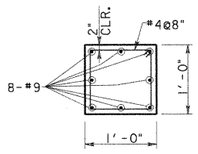

SECTION A-A
SCALE: 1"=1'-0"

UNDERGROUND POND REINFORCING TABLE																		
POND DESIGNATION	BARS a		BARS b		BARS b1		BARS c		BARS d1		BARS d2		BARS d3		BARS f1, f2, f3(#4)			
	SIZE	SPA.	SIZE	SPA.	SIZE	SPA.	SIZE	SPA.	SIZE	SPA.	SIZE	SPA.	SIZE	SPA.	f1 Spa.	f2 Spa.	f3 Spa.	
1A	#6	@12"	#8	@8"	#6	@8"	#8	@10"	#6	@6"	#6	@6"	#6	@6"	@6"	@12"	@7"	
1B	#6	@12"	#8	@8"	#6	@8"	#8	@10"	#6	@6"	#6	@6"	#6	@6"	@6"	@12"	@7"	
1C	#6	@12"	#8	@8"	#6	@8"	#8	@10"	#7	@6"	#6	@6"	#7	@6"	@6"	@12"	@7"	
2A	#6	@12"	#8	@8"	#6	@8"	#8	@10"	#6	@6"	#6	@6"	#6	@6"	@6"	@12"	@7"	
2B	#6	@12"	#8	@8"	#6	@8"	#8	@10"	#6	@6"	#6	@6"	#6	@6"	@6"	@12"	@7"	
2C	#7	@12"	#8	@8"	#6	@8"	#8	@10"	#7	@6"	#6	@6"	#8	@6"	@6"	@12"	@7"	
2D1	#7	@12"	#8	@8"	#6	@8"	#8	@10"	#7	@6"	#6	@6"	#8	@6"	@6"	@12"	@7"	
2D2	#7	@12"	#8	@8"	#6	@8"	#8	@10"	#7	@6"	#6	@6"	#8	@6"	@6"	@12"	@7"	

UNDERGROUND POND DIMENSION TABLE											
POND DESIGNATION	A	B	C	D	E	F	G			MAX FILL	AVERAGE FILL
1A	160'-4"	9'-2"	9'-3"	22'-0"	97'-0"	19'-0"	7'-0"			11'-0"	7'-6"
1B	128'-10"	9'-2"	9'-3"	15'-6"	77'-0"	11'-0"	7'-0"			8'-6"	5'-6"
1C	118'-10"	9'-8"	9'-9"	15'-6"	66'-0"	11'-0"	7'-6"			8'-3"	5'-6"
2A	147'-10"	9'-2"	9'-3"	15'-6"	92'-0"	11'-0"	7'-0"			9'-3"	6'-9"
2B	86'-10"	9'-2"	9'-3"	15'-6"	44'-0"	11'-0"	7'-0"			6'-9"	4'-9"
2C	133'-10"	10'-2"	10'-3"	15'-6"	77'-0"	11'-0"	8'-0"			4'-9"	3'-6"
2D1	181'-4"	10'-2"	10'-3"	22'-0"	110'-0"	13'-0"	8'-0"			11'-10"	7'-3"
2D2	211'-4"	10'-2"	10'-3"	13'-0"	139'-0"	22'-0"	8'-0"			9'-5"	7'-9"

GENERAL NOTES: UNDERGROUND PONDS

1. DESIGNED ACCORDING TO CURRENT AASHTO 1996 STANDARD SPECIFICATIONS.
2. DESIGNED FOR HS20 LOADING AND TO THE MAXIMUM FILL HEIGHT SHOWN.
3. ALL REINFORCING SHALL BE GRADE 60 KSI.
4. ALL CONCRETE SHALL BE CLASS "C".
5. REINFORCING BARS SHALL BE ADJUSTED TO PROVIDE A MINIMUM OF 1½" CLEAR COVER, UNLESS OTHERWISE NOTED.
6. ALL DIMENSIONS ARE IN FEET AND INCHES AND ALL MASS IS IN POUNDS UNLESS OTHERWISE NOTED.
7. SEE POND LAYOUT SHEETS FOR POND ORIENTATION AND LOCATION; PLUS THE ORIENTATION, SIZE AND LOCATION OF INCOMING AND OUTGOING DRAINAGE LINES.
8. WATERSTOPS SHALL BE HYDROPHILIC WATERSTOPS SUCH AS ADEKA MC-2010M.
9. PROVIDE 3" CLEARANCE WHERE CAST AGAINST SOIL.
10. PROVIDE CONSTRUCTION JOINTS IN WALLS AT A MAXIMUM SPACING OF 30 FOOT ON CENTER. MAXIMUM SLAB AREA TO BE PLACED WITHOUT CONSTRUCTION JOINTS IS 3000 SQUARE FEET. SLAB AND WALL CONSTRUCTION JOINTS SHALL ALIGN.
11. SEE POND LAYOUT FOR FLOWLINE. BOTTOM SLAB SHALL PROVIDE A .02 FT/FT SLOPE ALONG THE EDGE OF WALL. PERIMETER WALL HEIGHT (G) SHALL BE CONSTANT.
12. OFF SET RISER TO MISS ROOF SLAB BEAM.
13. AT UNDERGROUND PONDS 2C AND 2D2 THE ACCESS HATCH IS OPPOSITE HAND FROM WHAT IS SHOWN AND IS LOCATED FROM THE OPPOSITE WALL TO AVOID INTERFERENCE WITH THE DRAINAGE DITCH.
14. COLUMN SPACING IS 20.0 FT O.C. MAX. UNLESS NOTED OTHERWISE. THERE WILL BE NO COLUMNS WITHIN THE SPLITTER BOX, WHERE SPLITTER BOX EXTENDS TO THE ROOF BEAM OR BEYOND THE BEAM IS SUPPORTED BY THE SPLITTER BOX WALLS.
15. LAP TOP BARS @ MID SPAN AND BOTTOM BARS @ SUPPORTS.

ESTIMATED QUANTITIES*			
POND DESIGNATION	CONCRETE (CY)	REINFORCING BARS (LBS)	EXCAVATION (CY)
1A	623	144,925	
1B	505	115,855	
1C	476	109,213	
2A	572	131,682	
2B	356	82,752	
2C	536	123,427	
2D1	712	165,990	
2D2	823	191,615	

* QUANTITIES FOR CONTRACTOR'S ESTIMATE ONLY. ALL ITEMS ARE SUBSIDIERY TO THE POND ITEM.

STATE OF TEXAS
WILLY R. BURNS
44162
REGISTERED
ENGINEER
4/2/99

NO. DATE REVISION APPROVED

Turner Collie & Braden Inc.
Engineers • Planners • Project Managers

DATE SUTTON JOB NO. 62-14004-011 ADDENDUM

© 1998 Texas Department of Transportation

US 183

WATER QUALITY PONDS
STRUCTURAL DETAILS

SHEET 1 OF 11

Designed	WRB	FED. RD. DIV. NO.	STATE	FEDERAL AID PROJECT NO.				HIGHWAY NO.
Checked		6	TEXAS	NH99(556)				US 183
Drawn	MR	STATE DIST. NO.	COUNTY	CONTROL NO.	SECTION NO.	JOB NO.		SHEET NO.
Checked		14	WILLIAMSON	151	5	072		261a

UGPDTL1.DGN

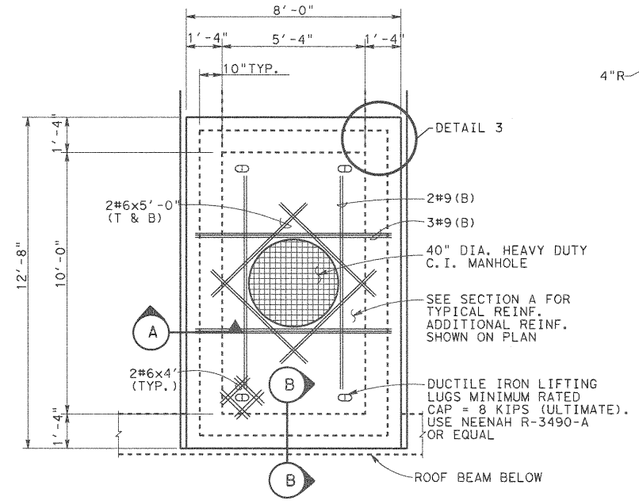

MAINTENANCE ACCESS HATCH

DETAIL 1

SCALE: 3/8" = 1'-0"

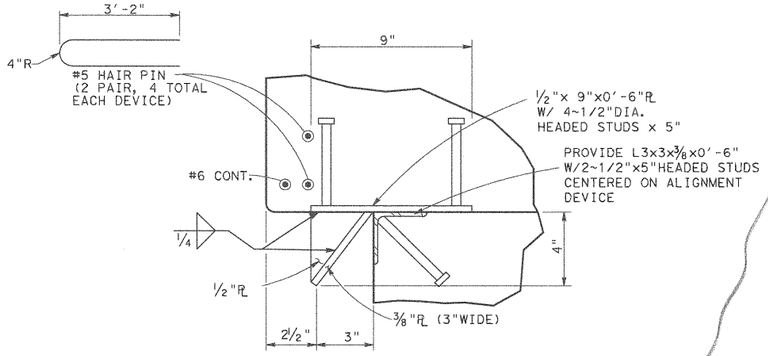

PROVIDE 8 DEVICES (GALV. AFTER FABRICATION) 2 EACH SIDE

DETAIL 2

ALIGNMENT DEVICE

SCALE: 3" = 1'-0"

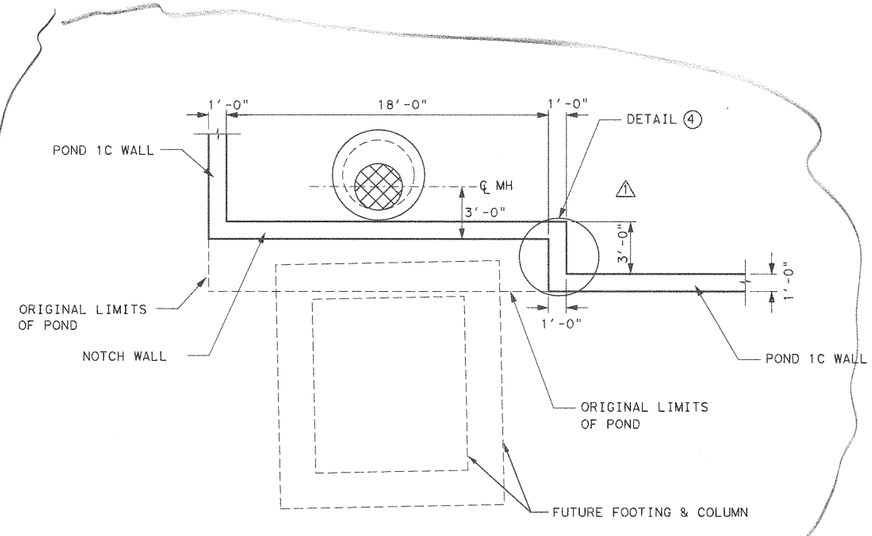

POND 1C MODIFICATION

SCALE: 3" = 1'-0"

SECTION A

SCALE: 1/2" = 1'-0"

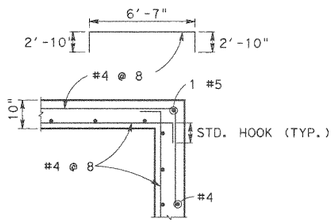

DETAIL 3

HORIZONTAL REINFORCEMENT

SCALE: 1/2" = 1'-0"

ACCESS HATCH		
POND	H1 (±)	ELEV. A
1A	8'-8"	929.20
1B	6'-7"	931.98
1C	6'-7"	931.62
2A	8'-4"	932.04
2B	5'-10"	932.20
2C	4'-10"	933.06
2D1	7'-4"	934.04
2D2	7'-11"	932.50

MANHOLE TABLE		
POND	H2	H3
1A	9'-0"	5'-0"
1B	9'-0"	4'-0"
1C	8'-0"	4'-0"
2A	9'-0"	4'-0"
2B	7'-0"	4'-0"
2C	3'-0"	5'-0"
2D1	10'-0"	4'-0"
2D2	7'-0"	5'-0"

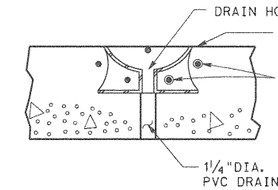

SECTION B

SCALE: 1"= 1'-0"

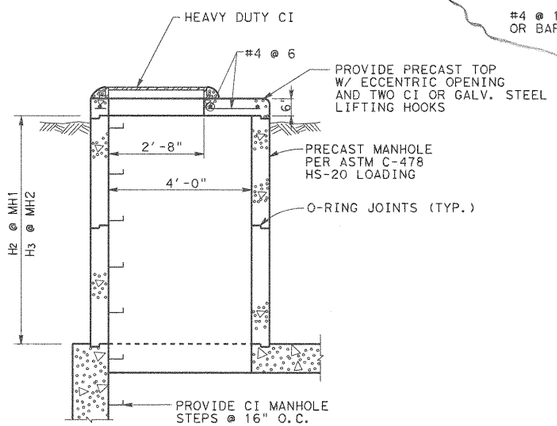

MANHOLE DETAIL

SCALE: 1/2" = 1'-0"

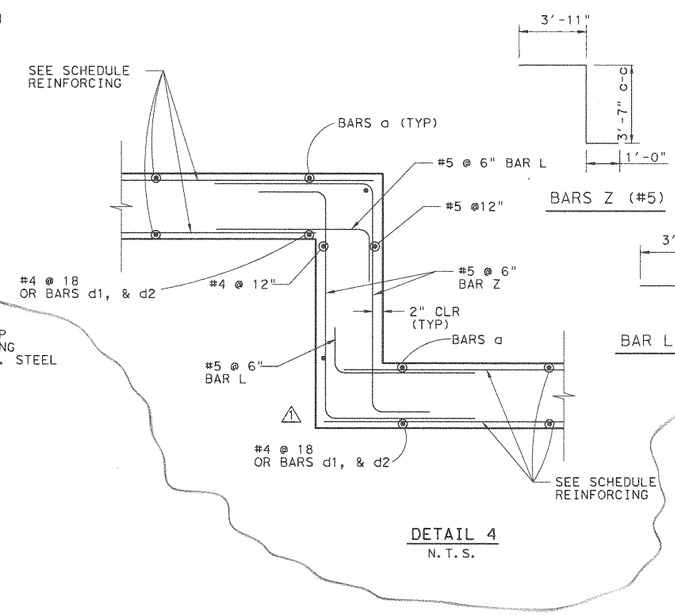

DETAIL 4

N.T.S.

STATE OF TEXAS
WALLY R. BURNS
44162
REGISTERED PROFESSIONAL ENGINEER
Wally R Burns
01/29/01

1	JAN. 26 01	ADD NOTCH	WRB
NO.	DATE	REVISION	APPROVED

Turner Collie & Braden Inc.
Engineers • Planners • Project Managers

TRANSPORTATION | Unit | Job No. 81-07401-024 | Approved

© 1998 Texas Department of Transportation

US 183
WATER QUALITY PONDS
STRUCTURAL DETAILS

SCALE: AS NOTED — SHEET 2 OF 11

Designed	Checked	Drawn	Checked	FED. RD. DIV. NO.	STATE	FEDERAL AID PROJECT NO.				HIGHWAY NO.
WRB		MR		6	TEXAS	NH99(556)				US 183
				STATE DIST. NO.	COUNTY	CONTROL NO.	SECTION NO.	JOB NO.		SHEET NO.
				14	WILLIAMSON	151	5	072		261b

UGPDT2.DGN

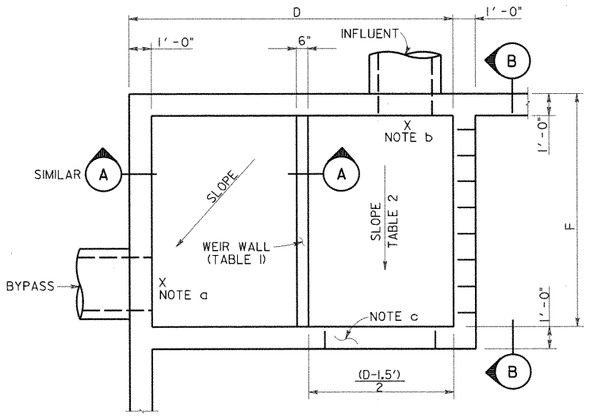

SEE TABLE SHEET I OF II
FOR DIMENSIONS D & F

SPLITTER BOX PLAN (POND 2D2)

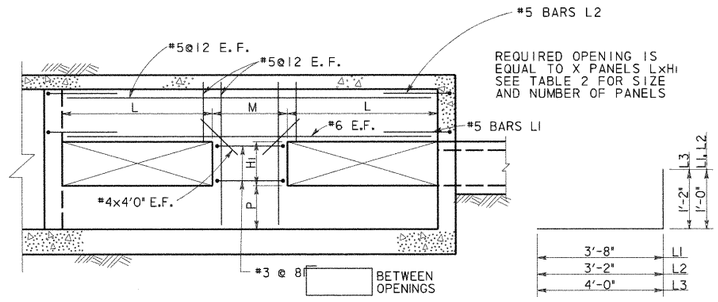

SECTION B

BARS L

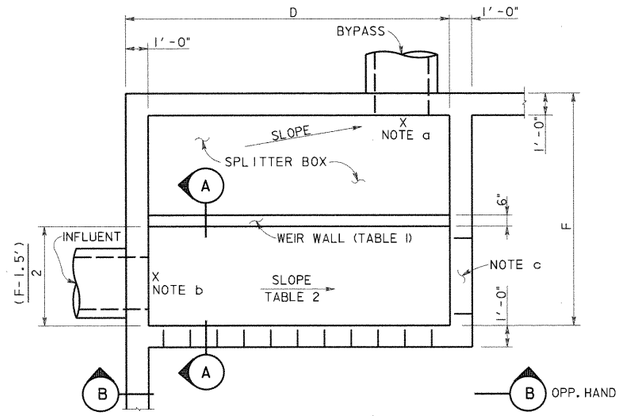

SEE TABLE SHEET I OF II
FOR DIMENSIONS D & F

SPLITTER BOX PLAN (TYPICAL)

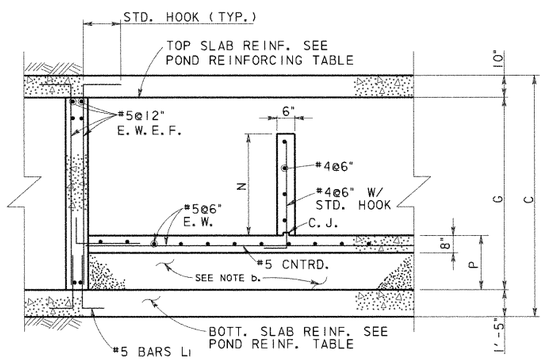

SECTION A

TABLE I BYPASS OUTFALL				
POND	BYPASS LINE ELEVATION	BYPASS WEIR		
		TOP OF WALL ELEV.	N*	P
1A	914.23	917.78	3'-6"	1'-6"
1B	918.44	921.00	2'-6"	2'-6"
1C	918.39	922.75	4'-3"	1'-9"
2A	917.38	920.92	3'-6"	1'-6"
2B	921.92	923.49	1'-6"	3'-6"
2C	923.82	925.90	2'-0"	4'-6"
2D1	920.53	923.63	3'-0"	2'-6"
2D2	916.71	921.85	5'-0"	1'-0"

*N IS MINIMUM DIMENSION, SPLITTER BOX FLOOR SLOPES, HOLD TOP OF WEIR WALL CONSTANT.

TABLE 2 INFLUENT LINE						
POND	INFLUENT ELEV.	SLOPE %	INFLUENT WALL			
			OPENINGS X	M	L	HI
1A	914.28	0.29	4	3'-0"	3'-0"	2'-6"
1B	918.50	0.48	3	2'-9"	3'-0"	1'-6"
1C	918.50	0.85	3	2'-9"	3'-0"	1'-6"
2A	917.42	0.33	3	2'-9"	3'-0"	1'-6"
2B	921.99	0.54	1	0	14'-8"	0'-9"
2C	923.90	0.62	3	2'-9"	3'-0"	1'-0"
2D1	920.63	0.53	3	6'-0"	3'-0"	2'-0"
2D2	916.85	0.78	4	3'-8"	2'-6"	2'-0"

NOTES:

a. SEE TABLE I THIS SHEET FOR OUT FLOW ELEVATION. SLOPE SLAB FROM OVERFLOW WEIR TO OUTFALL.

b. SEE TABLE 2 FOR INFLUENT ELEVATION. TOP OF SPLITTER BOX SLAB TO MATCH INFLOW ELEVATION. AT POND 2D1 THE ELEVATION SHOWN REPRESENTS A 6" DROP FROM THE INFLUENT FLOWLINE. CONTRACTOR MAY USE CEMENT STABILIZED SAND UNDER THE SLAB OR PLACE CONCRETE FOR THE FILL.

c. PROVIDE 3'x .75' OPENING AT BOTTOM OF SPLITTER BOX WALL AT END OF CHANNEL.

STATE OF TEXAS
WILLY R. BURNS
54103
REGISTERED
PROFESSIONAL ENGINEER
4/28/99

NO.	DATE	REVISION	APPROVED

Turner Collie & Braden Inc.
Engineers • Planners • Project Managers

SUTTON — Job No. 62-14004-011

© 1998 Texas Department of Transportation

US 183
WATER QUALITY PONDS
STRUCTURAL DETAILS

SCALE: AS NOTED — SHEET 3 OF 11

Designed	WRB	FED. RD. DIV. NO.	STATE	FEDERAL AID PROJECT NO.				HIGHWAY NO.
Checked		6	TEXAS	NH99(556)				US 183
Drawn	MR	STATE DIST. NO.	COUNTY	CONTROL NO.	SECTION NO.	JOB NO.		SHEET NO.
Checked		14	WILLIAMSON	151	5	072		261c

UGPDT3.DGN

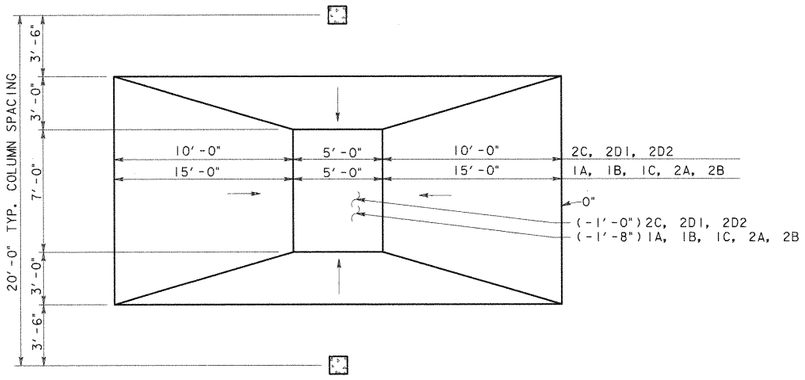

PLAN

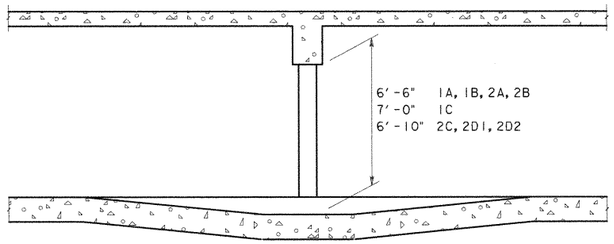

SECTION

REINFORCING LAP SPLICE & EMBEDMENT SCHEDULE						
BAR SIZE	MIN LAP LENGTH		MIN EMBEDMENT LENGTH			
	TOP BARS	OTHER BARS	TOP BARS		OTHER BARS	
			STR.	STD. HOOK	STR.	STD. HOOK
4	24"	20"	17"	9"	12"	7"
5	30"	24"	21"	10"	15"	8"
6	36"	28"	25"	10"	18"	8"
8	58"	41"	42"	15"	30"	12"

PROVIDE ONE CROSS OVER DETAIL FOR E ≤ 80'
PROVIDE TWO CROSS OVER DETAILS FOR E > 80'

CROSS OVER DETAIL
SCALE: 1/4" = 1'-0"

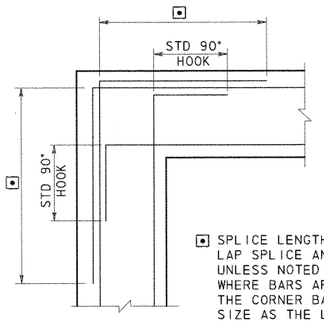

⊡ SPLICE LENGTH SEE REINFORCING LAP SPLICE AND EMBEDMENT TABLES. UNLESS NOTED OTHERWISE ON DWGS WHERE BARS ARE DIFFERENT SIZE THE CORNER BAR SHALL BE SAME SIZE AS THE LARGER BAR

CORNER REINFORCING
FOR WALLS OR GRADE BEAMS

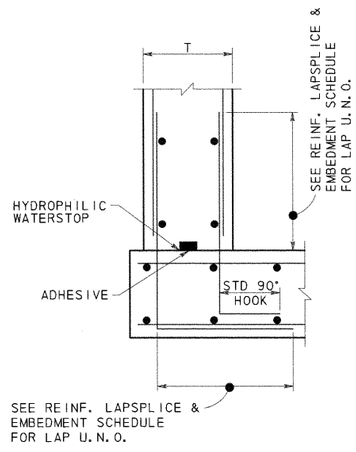

CONSTRUCTION JOINT
BASE OF WALLS

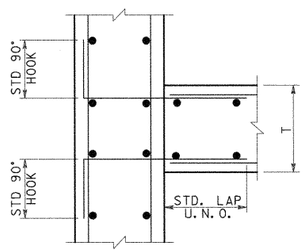

CONSTRUCTION JOINT
WALL INTERSECTIONS

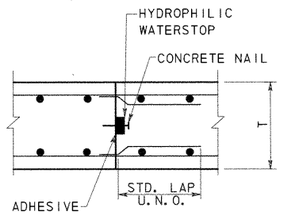

CONSTRUCTION JOINT
SLABS

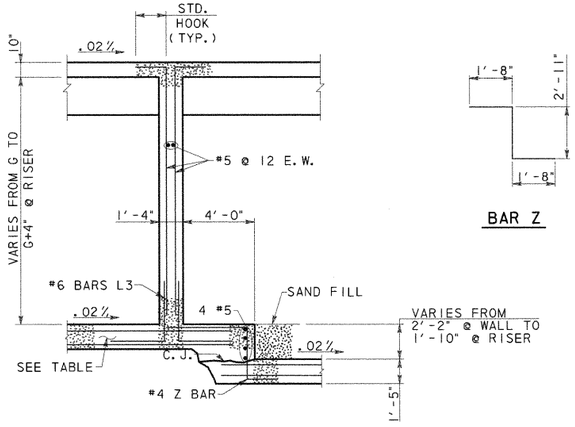

SECTION B

BAR Z

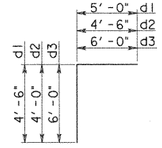

BARS D

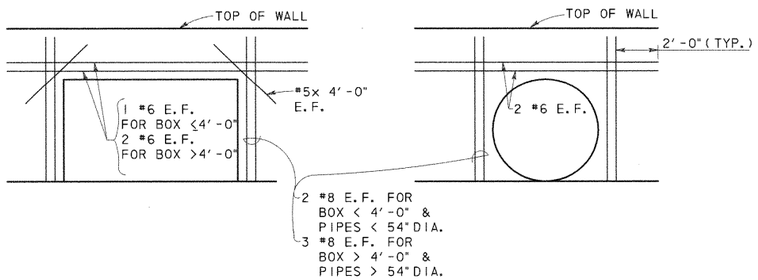

ADDITIONAL REINFORCING @ OPENINGS



NO.	DATE	REVISION	APPROVED

Turner Collie & Braden Inc.
Engineers • Planners • Project Managers

DATE: SUTTON | JOB NO. 62-14004-011 | APPROVED

© 1998 Texas Department of Transportation

US 183
WATER QUALITY PONDS
STRUCTURAL DETAILS

SCALE: AS NOTED | SHEET 4 OF 11

DESIGNED	CHECKED	DRAWN	CHECKED	FED. RD. DIV. NO.	STATE DIST. NO.	STATE	COUNTY	FEDERAL AID PROJECT NO. CONTROL NO.	SECTION NO.	JOB NO.	SHEET NO.	HIGHWAY NO.
WRB		MR		6	14	TEXAS	WILLIAMSON	NH99(556) 151	5	072	261d	US 183

UGPDT4.DGN

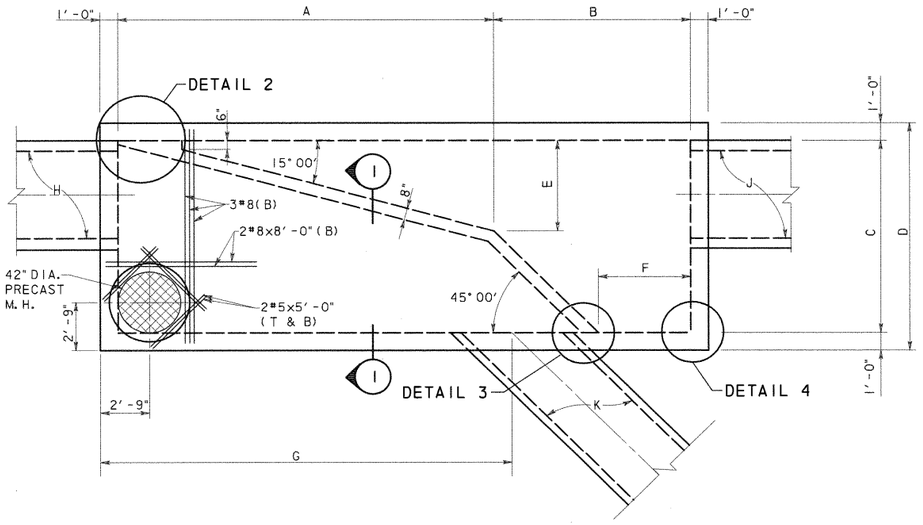

SPLITTER BOX DIMENSION TABLE

BOX LOCATION	A	B	C	D	E	F	G	H	J	K
POND SPRINGS	21'-0"	11'-0"	11'-0"	13'-0"	5'-2"	5'-2"	22'-0"	6x5 RCB	6x5 RCB	4x4 RCB
620 LEFT SIDE	13'-9"	8'-9"	8'-0"	10'-0"	3'-2"	4'-1"	13'-7"	*48" RCP	4x4 RCB	48" RCP

*48" RCP @ 15° SKEW
SEE DRAINAGE DETAIL SHEET.

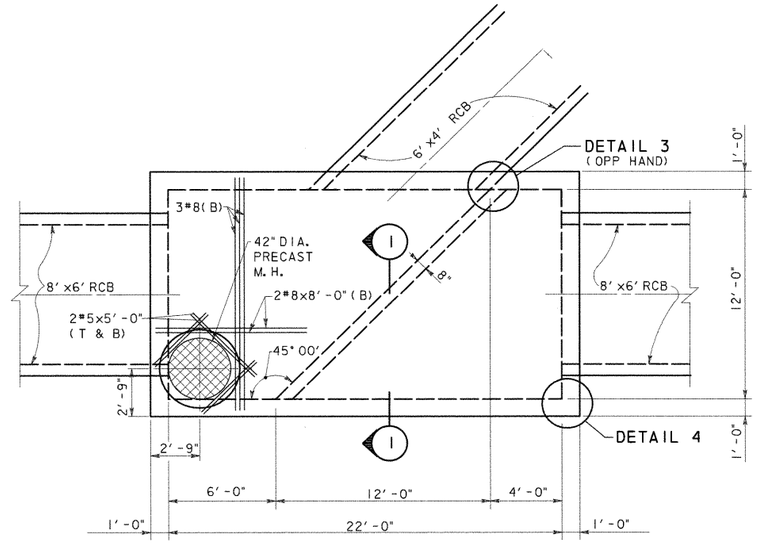

620 RIGHT SIDE
PLAN VIEW
SCALE: 1/4" = 1'-0"

ESTIMATED QUANTITIES			
BOX	CONCRETE (YD^3) *	REINFORCING (LBS) *	STRUCTURAL EXCAVATION (YD)
POND SPRINGS	56.8	7,964	
620 LEFT	32.5	4,096	
620 RIGHT	48.8	5,877	

* QUANTITIES FOR CONTRACTOR'S ESTIMATE ONLY. ALL ITEMS ARE SUBSIDIARY TO THE SPLITTER BOX.

PLAN VIEW
SCALE: 1/4" = 1'-0"

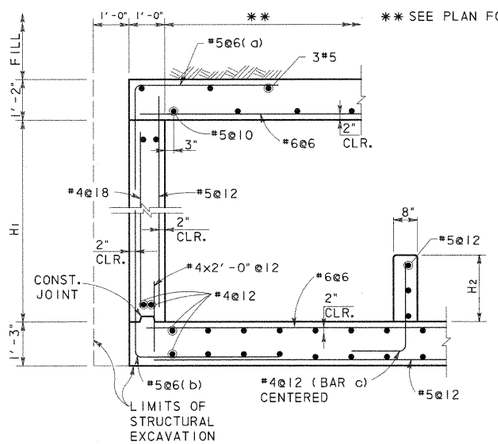

SECTION 1
SCALE: 1/2" = 1'-0"

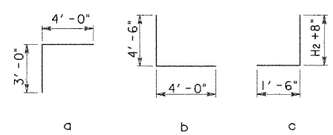

BOX LOCATION	H1	H2
POND SPRINGS	5'-6"	3'-0 1/2"
620 LEFT SIDE	4'-6"	2'-6"
620 RIGHT SIDE	6'-8"	1'-3"

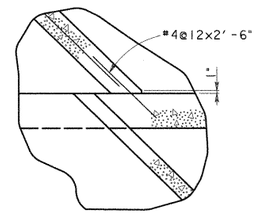

DETAIL 3
SCALE: 1/2" = 1'-0"

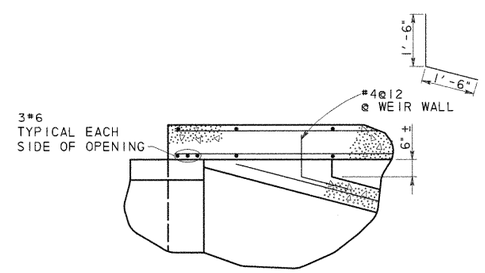

DETAIL 2
SCALE: 1/2" = 1'-0"

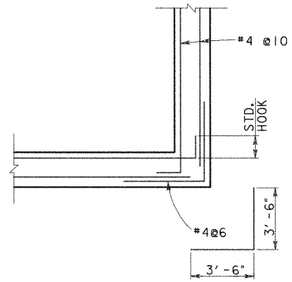

DETAIL 4
SCALE: 1/2" = 1'-0"

GENERAL NOTES:

1. DESIGNED ACCORDING TO CURRENT AASHTO 1996 STANDARD SPECIFICATIONS.
2. DESIGNED FOR HS20 LOADING AND TO THE MAXIMUM FILL HEIGHT SHOWN.
3. ALL REINFORCING SHALL BE GRADE 60 KSI.
4. ALL CONCRETE SHALL BE CLASS "C".
5. ALL DIMENSIONS ARE IN FEET AND INCHES AND ALL MASS IS IN POUNDS UNLESS OTHERWISE NOTED.



NO.	DATE	REVISION	APPROVED

Turner Collie & Braden Inc.
Engineers • Planners • Project Managers

DATE: SUTTON | JOB NO. 62-14004-011 | APPROVED

© 1998 Texas Department of Transportation

US 183
WATER QUALITY PONDS
STRUCTURAL DETAILS

SCALE: AS NOTED | SHEET 6 OF 11

Designed	WRB	FED. RD. DIV. NO.	STATE	FEDERAL AID PROJECT NO.				HIGHWAY NO.
Checked		6	TEXAS	NH99(556)				US 183
Drawn	MR	STATE DIST. NO.	COUNTY	CONTROL NO.	SECTION NO.	JOB NO.		SHEET NO.
Checked		14	WILLIAMSON	151	5	072		261f

UGPDT6.DGN

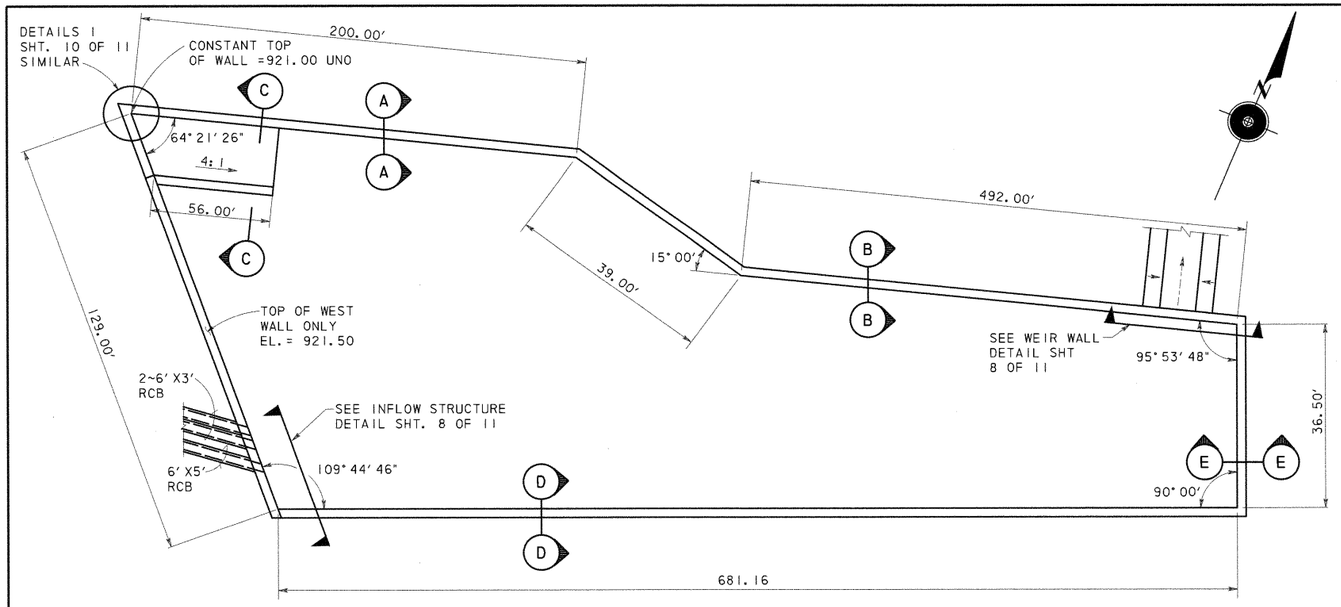

SYSTEM 3 DETENTION POND PLAN

ESTIMATED QUANTITIES (SECTION A)		
CONCRETE (YD^3) *	REINFORCING (LBS) *	** SQ. FT.
2,626	771,900	24,431

* QUANTITIES FOR CONTRACTOR'S ESTIMATE ONLY.

** EXPOSED FACE

*** WALL REINFORCING FOR 32' PANEL (SECT. A)									
A1 ~ 26 #5 @ 15" c-c		A2 ~ 25 #6 @ 15" c-c		A3 ~ 25 #7 @ 15" c-c		A4 ~ 26 #9 @ 15" c-c		A5 ~ 25 #9 @ 15" c-c	
Lgth	lb	Lgth	lb	Lgth	lb	Lgth	lb	Lgth	lb
129	292	145	455	218	928	188	1384	118	837

*** ONE SIDE SHOWN, BARS A BOTH SIDES

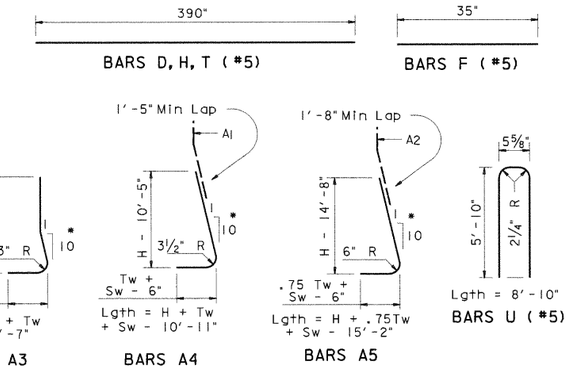

* A BARS ARE STRAIGHT IN FRONT FACE.

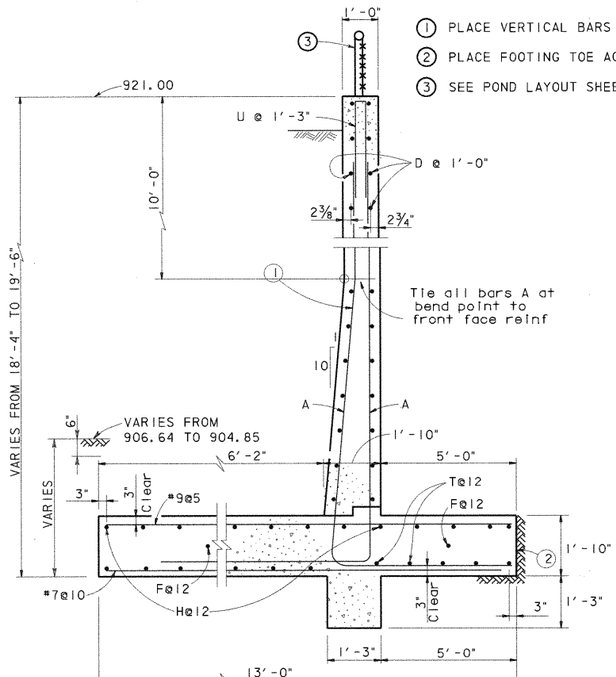

SECTION A-A
SCALE: ½" = 1'-0"

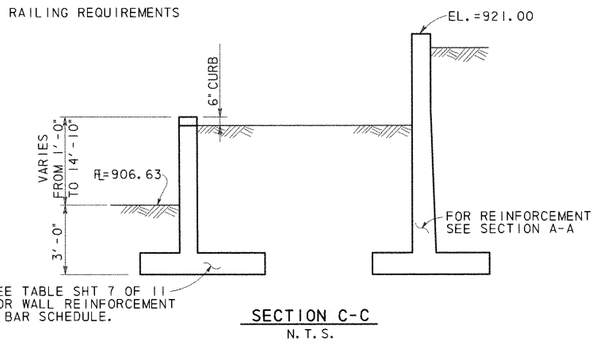

SECTION C-C
N.T.S.

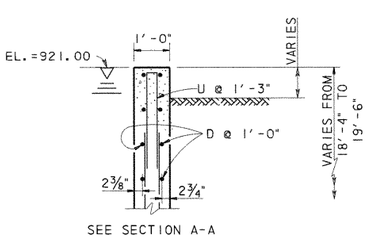

SEE SECTION A-A FOR REST OF DETAIL

SECTION D-D
SCALE: ½" = 1'-0"

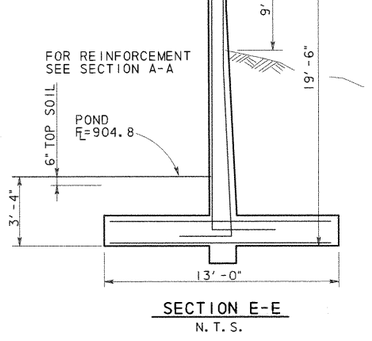

SECTION E-E
N.T.S.

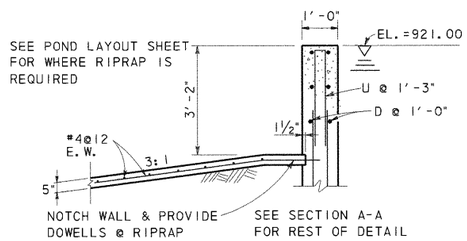

SECTION B-B
SCALE: ½" = 1'-0"

ELEVATION

GENERAL NOTES:

1. DESIGNED ACCORDING TO CURRENT AASHTO 1996 STANDARD SPECIFICATIONS.
2. DESIGNED FOR HS20 LOADING AND EQUIVALENT SOIL PRESSURE OF 60 PCF.
3. ALL REINFORCING SHALL BE GRADE 60 KSI.
4. ALL CONCRETE SHALL BE CLASS "A".
5. REINFORCING BARS SHALL BE ADJUSTED TO PROVIDE A MINIMUM OF 1½" CLEAR COVER.
6. ALL DIMENSIONS ARE IN FEET AND INCHES AND ALL MASS IS IN POUNDS UNLESS OTHERWISE NOTED.
7. CONSTRUCTION JOINT SHALL BE AT 32 FT. MAX. OC. PROVIDE CONSTRUCTION AT 15' MAX FROM EACH CORNER. CORNER CLOSURES SHALL BE PLACED LAST.
8. PROVIDE AN EXPANSION JOINT AFTER MAXIMUM OF 3 PANELS.
9. SEE SHEET 11 OF 11 FOR CONSTRUCTION AND EXPANSION JOINT DETAILS.

STATE OF TEXAS
WALLY R. BURNS
44162
REGISTERED PROFESSIONAL ENGINEER
4/28/99

NO.	DATE	REVISION	APPROVED

Turner Collie & Braden Inc.
Engineers • Planners • Project Managers

SUTTON | Job No. 62-14004-011 | Approved

© 1998 Texas Department of Transportation

US 183
WATER QUALITY PONDS
STRUCTURAL DETAILS

SCALE: AS NOTED | SHEET 7 OF 11

Designed	Checked	Drawn	Checked	FED. RD. DIV. NO.	STATE DIST. NO.	STATE	COUNTY	CONTROL NO.	SECTION NO.	JOB NO.	HIGHWAY NO. / SHEET NO.
WRB		MR		6	14	TEXAS	WILLIAMSON	151	5	072	US 183 / 261g

FEDERAL AID PROJECT NO. NH99(556)

UGPDT7.DGN

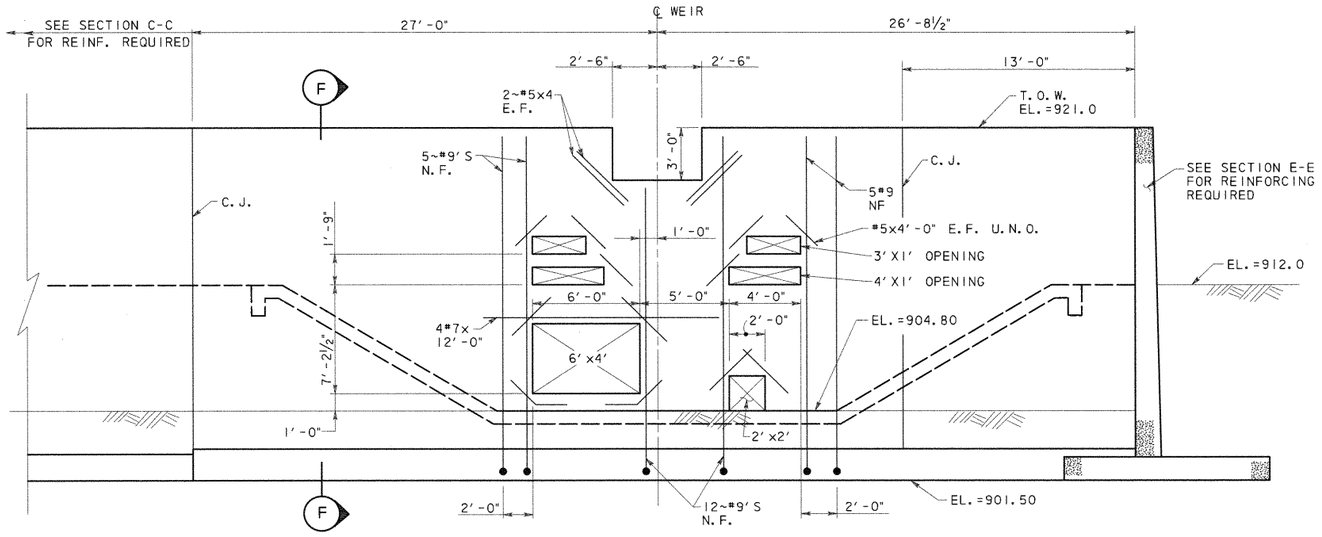

ADDITIONAL REINFORCING SHOWN, SEE SECTION F FOR TYPICAL REINF.

WEIR WALL DETAIL

SCALE: ¼" = 1'-0"

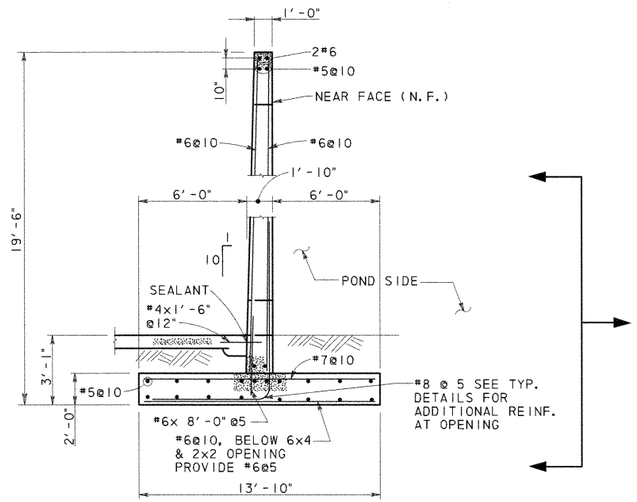

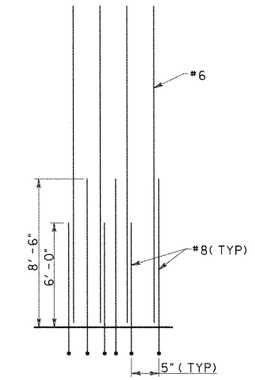

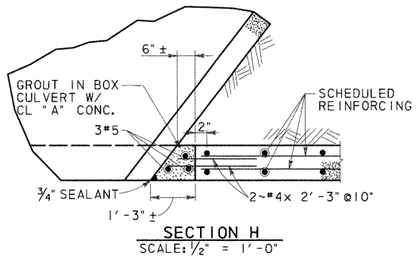

SECTION H

SCALE: ½" = 1'-0"

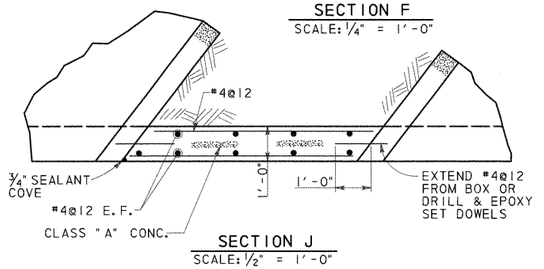

SECTION J

SCALE: ½" = 1'-0"

SECTION F

SCALE: ¼" = 1'-0"

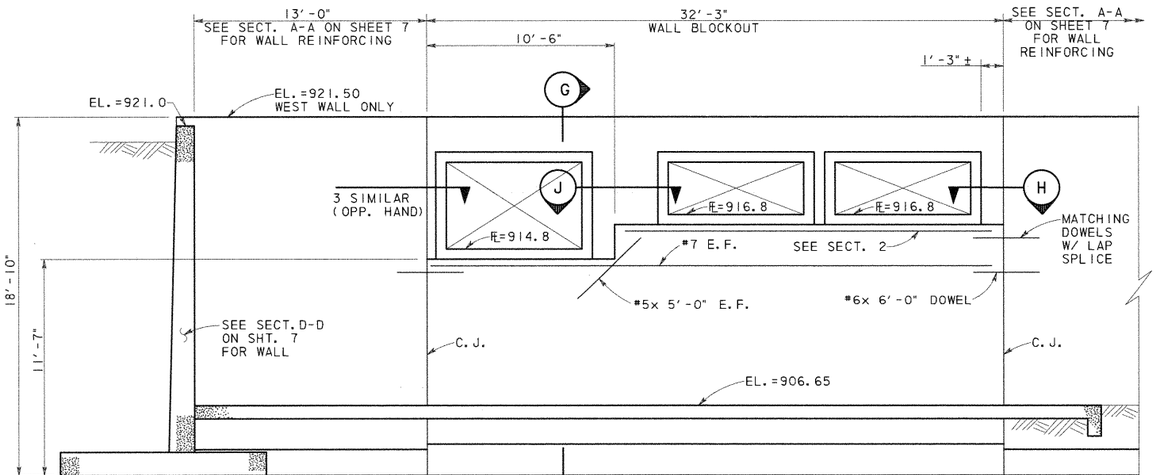

INFLOW STRUCTURE DETAIL

SCALE: ¼" = 1'-0"

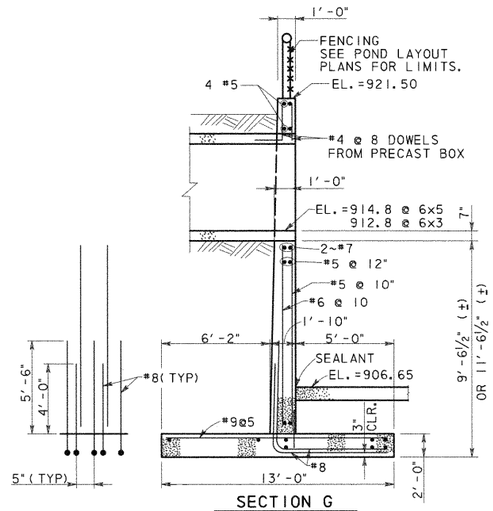

SECTION G

SCALE: ¼" = 1'-0"

STATE OF TEXAS · WALLY R. BURNS · 64262 · REGISTERED PROFESSIONAL ENGINEER

Wally R. Burns 4/28/99

NO.	DATE	REVISION	APPROVED

Turner Collie & Braden Inc.

Engineers • Planners • Project Managers

SUTTON | Job No. 62-14004-011 | Approved

© 1998 Texas Department of Transportation

US 183

WATER QUALITY PONDS STRUCTURAL DETAILS

SCALE: AS NOTED — SHEET 8 OF 11

Designed WRB	Fed. Rd. Div. No. 6	State TEXAS	Federal Aid Project No. NH99(556)	Highway No. US 183
Checked				
Drawn MR	State Dist. No. 14	County WILLIAMSON	Control No. 151	Section No. 5
Checked				Job No. 072

Sheet No. 261h

UGPDT8.DGN

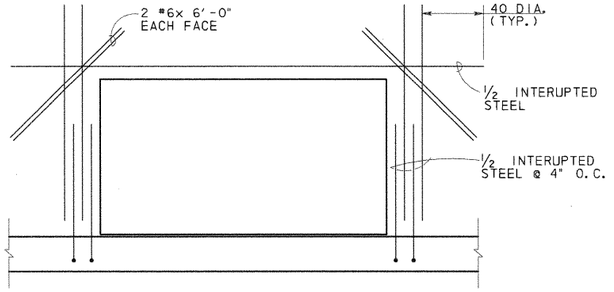

CULVERT OPENINGS

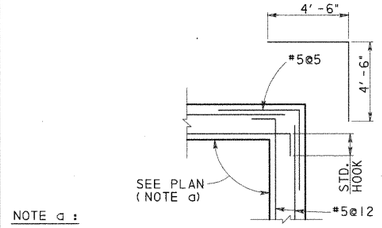

NOTE a :

SEE 620 MEDIAN POND (SHT. 5 OF 11), SYSTEM 3 POND (SHT. 7 OF 11)

DETAIL 1
SCALE: 1/2" = 1'-0"

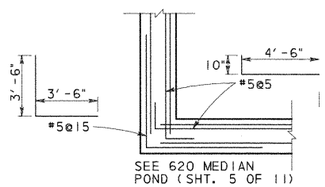

DETAIL 2
SCALE: 1/2" = 1'-0"

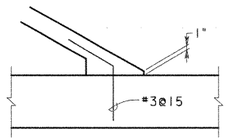

DETAIL 3
SCALE: 3/4" = 1'-0"

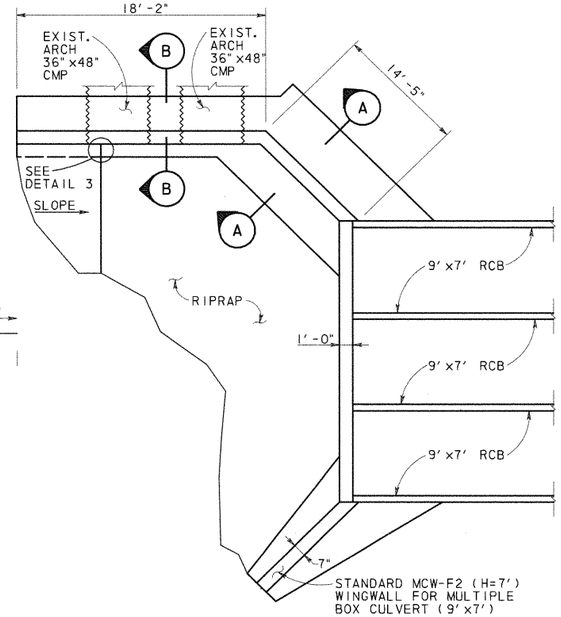

CULVERT @ POND SPRINGS PLAN
N. T. S.

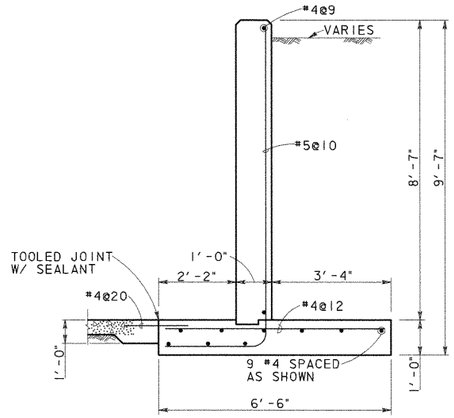

SECTION A-A
SCALE: 1/2" = 1'-0"

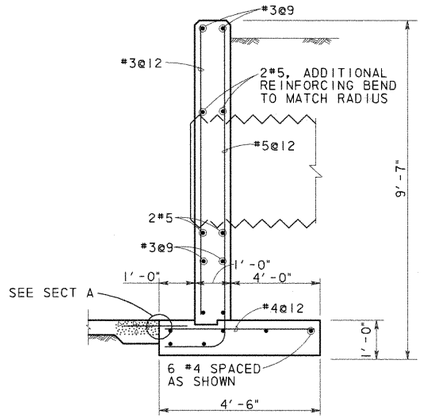

SECTION B-B
SCALE: 1/2" = 1'-0"

POND SPRINGS HEADWALL ESTIMATE QUANTITIES	
CONCRETE (YD^3) *	REINFORCING (LB) *
20.8	672

* QUANTITIES FOR CONTRACTOR'S INFORMATION ONLY. QUANTITIES SHOWN DO NOT INCLUDE THE .5 MCW-F2 WINGWALL OR THE CULVERT CURB.

THE HEADWALL SHALL BE PAID FOR AS MCW-F2(SPL).

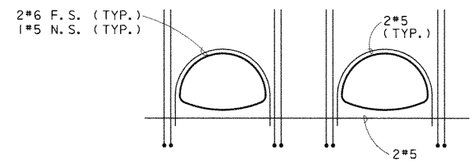

ADDITIONAL REINFORCMENT SHOWN. SEE SECTION B FOR TYPICAL

ELEVATION @ ARCH PIPE
N. T. S.

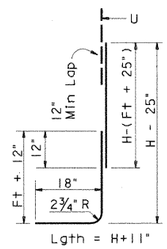

BARS B

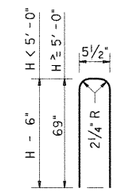

BARS U

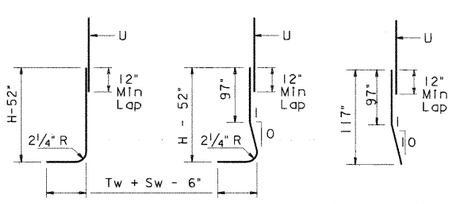

BARS A1

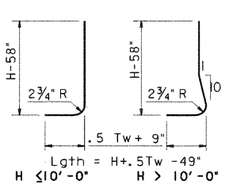

BARS A2

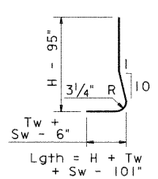

BARS A3

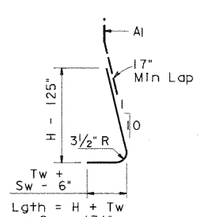

BARS A4

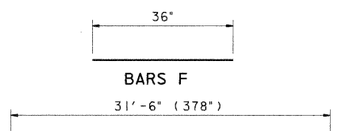

BARS D, H, T

BAR DETAILS POND SPRING

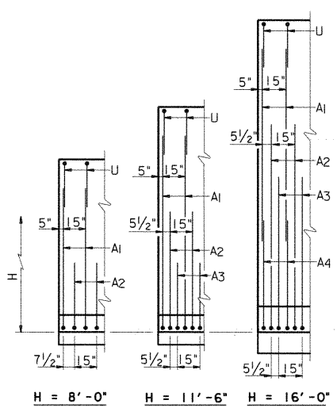

PARTIAL WALL ELEVATIONS
(Showing vertical reinforcing pattern in back face)

STATE OF TEXAS
WILLY R. BURNS
44162
REGISTERED
PROFESSIONAL ENGINEER
6/8/98

NO.	DATE	REVISION	APPROVED

Turner Collie & Braden Inc.
Engineers • Planners • Project Managers

TRANSPORTATION | Job No. 81-07401-024 | Approved

© 1998 Texas Department of Transportation

US 183
MISCELLANEOUS
WATER QUALITY PONDS
STRUCTURAL DETAILS

SCALE: AS NOTED | SHEET 10 OF 11

Designed	WRB	FED. RD. DIV. NO.	STATE	FEDERAL AID PROJECT NO.				HIGHWAY NO.
Checked		6	TEXAS	NH99(556)				US 183
Drawn	MR	STATE DIST. NO.	COUNTY	CONTROL NO.	SECTION NO.	JOB NO.		SHEET NO.
Checked		14	WILLIAMSON	151	5	072		261J

UGPDT10.DGN

AF 41904A

Ultimate Drainage Areas North of R.M. 620 Were Used In Storm Sewer And Water Quality Pond Design

R.M. 620

PECAN PARK

LAKE CREEK PARKWAY

HYMEADOW

Q50 = 447.4 cfs
Outfall 1

Pond 1A

Pond 1B

Pond 1C

Outfall 2
Q100 = 412 cfs
Q50 = 385 cfs

Pond 2A

Pond 2B

Pond 2C

Pond 2D1

Pond 2D2

R.M. 620 Median Pond

Q50 = 800 cfs

Q50 = 89.2 cfs

To Drainage Structures (By Others)

MELLOW MEADOWS DRIVE

LAKESTOP BLVD.

Interim Drainage Areas

US 183

R.M. 620

ANDERSON MILL ROAD

CONTRIBUTING AREA TO LAKE CREEK CHANNEL

A_{TOTAL} = 1133 ACRES
Q_{50} = 4100 cfs *
Q_{100} = 4400 cfs *

* THESE FLOWS ARE BASED ON REGIONAL ANALYSIS OF THE ENTIRE CONTRIBUTING AREA AND DO NOT EQUATE TO THE ACCUMULATED THYSYS FLOWS.

Q50 = 200 cfs

NO.	DATE	REVISION	APPROV.
4			
3			
2			
1			

Turner Collie & Braden Inc.
CONSULTING ENGINEERS
TEXAS AUSTIN/DALLAS/HOUSTON/PORT ARTHUR
COLORADO DENVER

Unit: AUSTIN | Job No. 72-07401-022 | Approved

STATE DEPARTMENT OF HIGHWAYS AND PUBLIC TRANSPORTATION

©1998 TxDOT

DRAINAGE AREA MAP

SCALE: 1" = 200'

Designed DAN	FED. NO. DIV. NO.	STATE	FEDERAL AID PROJECT NO.			HIGHWAY NO.
Checked	6	TEXAS	NH 99(556)			U.S. 183
Drawn WWS	STATE DIST. NO.	COUNTY	CONTROL NO.	SECTION NO.	JOB NO.	SHEET NO.
Checked DAN	14	WILLIAMSON	151	05	072	262a

STATE OF TEXAS
Robert W. Barnett
49537
REGISTERED PROFESSIONAL ENGINEER

Robert W. Barnett
5-09-88

A.F. 61904A

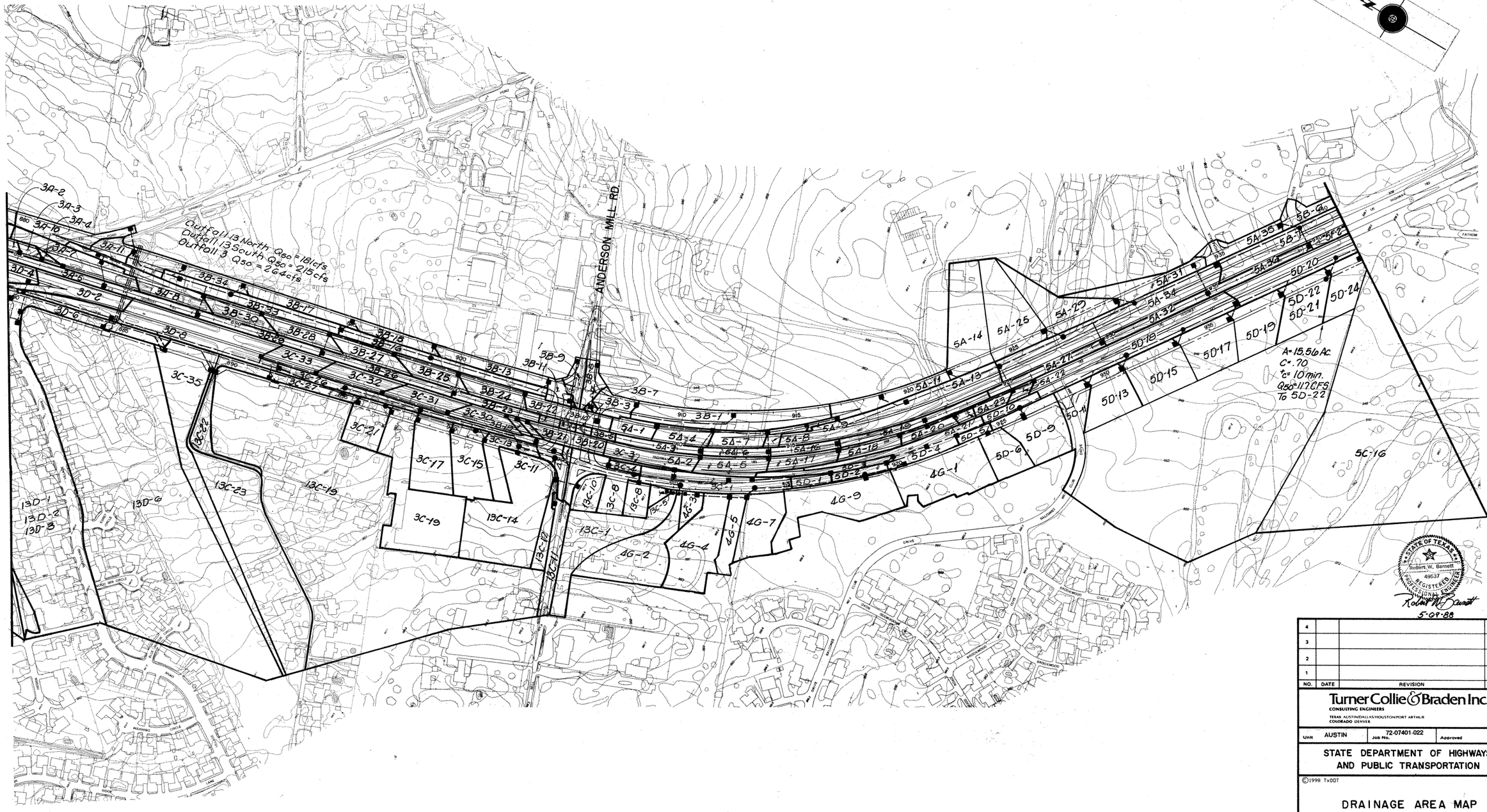

NO.	DATE	REVISION	APPROV.
4			
3			
2			
1			

Turner Collie & Braden Inc.
CONSULTING ENGINEERS
TEXAS AUSTIN/DALLAS/HOUSTON/PORT ARTHUR
COLORADO DENVER

Unit AUSTIN | Job No. 72-07401-022 | Approved

STATE DEPARTMENT OF HIGHWAYS AND PUBLIC TRANSPORTATION

©1998 TxDOT

DRAINAGE AREA MAP

SCALE: 1"=200'

Designed DAN	FED. RD. DIV. NO.	STATE	FEDERAL AID PROJECT NO.			HIGHWAY NO.
Checked	6	TEXAS	NH 99(556)			U.S. 183
Drawn WWS	STATE DIST. NO.	COUNTY	CONTROL NO.	SECTION NO.	JOB NO.	SHEET NO.
Checked DAN	14	WILLIAMSON	151	05	072	202b

A.F. 41804A

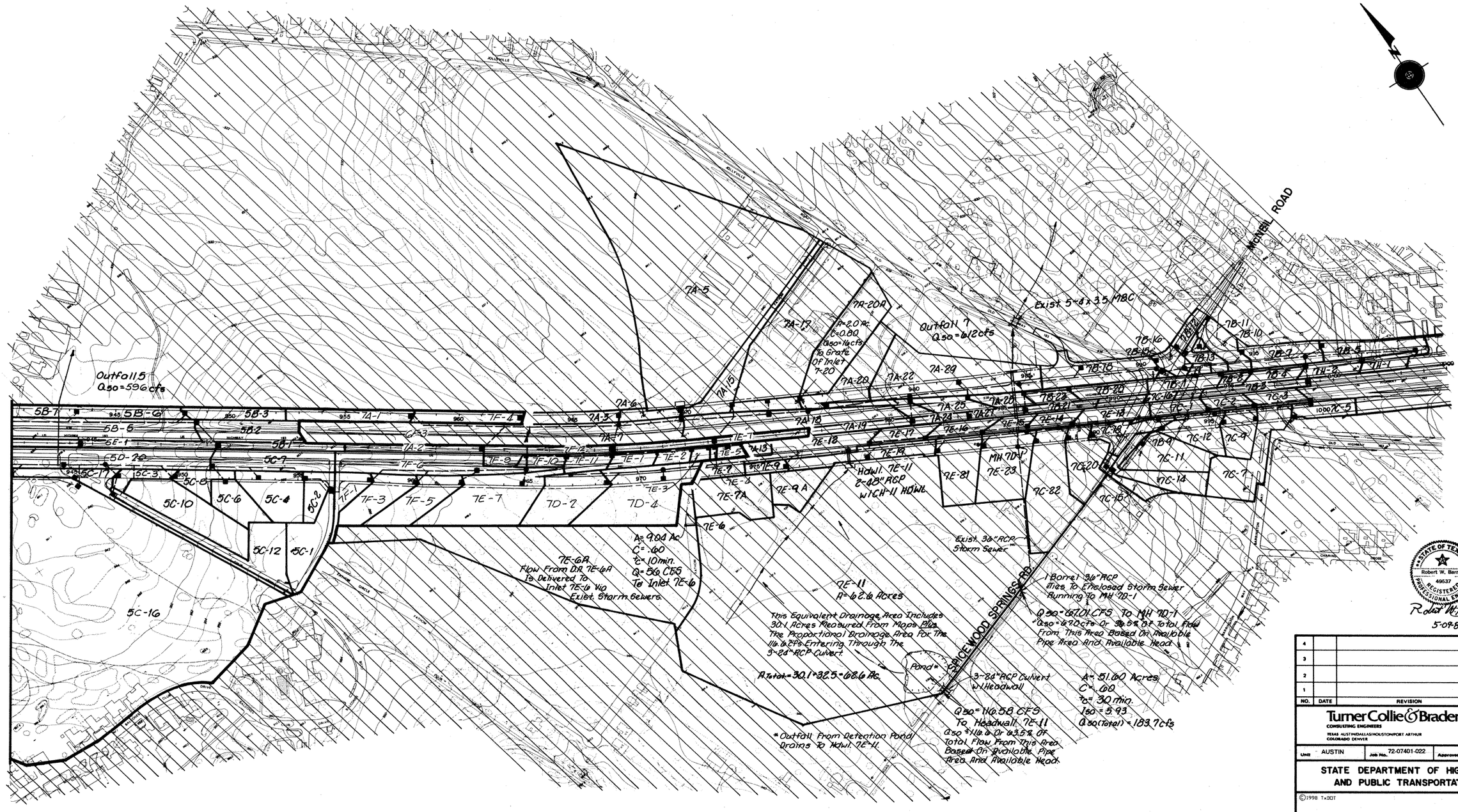
MICHEL ROAD
Outfall 5
Q50=596cfs
Outfall 7
Q50=612cfs
Exist 5-8'x3.5' MBC
7A-5
7A-17
7A-20A
A=2.0 Ac.
C=0.80
Q50=14cfs
To Grate Of Inlet 7-20
7A-15
7A-6
7A-3
7A-7
7A-18
7A-19
7A-20
7A-22
7A-29
7A-25
7A-24
7A-27
7A-26
7A-1
7A-2
7A-13
7F-4
7F-12
7F-11
7F-10
7F-9
7F-8
7F-6
7F-5
7F-3
7F-2
7F-1
7E-1
7E-2
7E-5
7E-7
7E-8
7E-9
7E-9A
7E-9A
7E-6
7E-3
7E-4
7E-7A
7E-10
7E-12
7E-13
7E-14
7E-15
7E-16
7E-17
7E-18
7E-19
7E-11
7E-81
7E-82
7E-23
MH 7D-1
7D-2
7D-4
HDWL 7E-11
2-48" RCP
W/CH-11 HDWL
5B-7
5B-6
5B-5
5B-3
5B-2
5B-1
5E-1
5D-20
5C-17
5C-7
5C-3
5C-8
5C-10
5C-6
5C-4
5C-2
5C-12
5C-1
5C-16
7B-11
7B-10
7B-16
7B-15
7B-13
7B-12
7B-14
7B-18
7B-17
7B-1
7B-2
7B-3
7B-4
7B-5
7B-6
7B-7
7B-8
7B-9
7B-21
7B-22
7B-23
7C-16
7C-1
7C-2
7C-3
1000 7C-5
7C-18
7C-19
7C-20
7C-12
7C-4
7C-11
7C-14
7C-7
7C-82
7C-15
7D-9
7D-11
7D-12
7D-13
7D-14
7D-15
7D-16
7D-17
7D-18
7D-19
7D-20
7D-21
7D-22
7D-23
7D-24
7D-25
7D-26
7D-27
7D-28
7D-29
7D-30
7D-31
7D-32
7D-33
7D-34
7D-35
7D-36
7D-37
7D-38
7D-39
7D-40
7D-41
7D-42
7D-43
7D-44
7D-45
7D-46
7D-47
7D-48
7D-49
7D-50

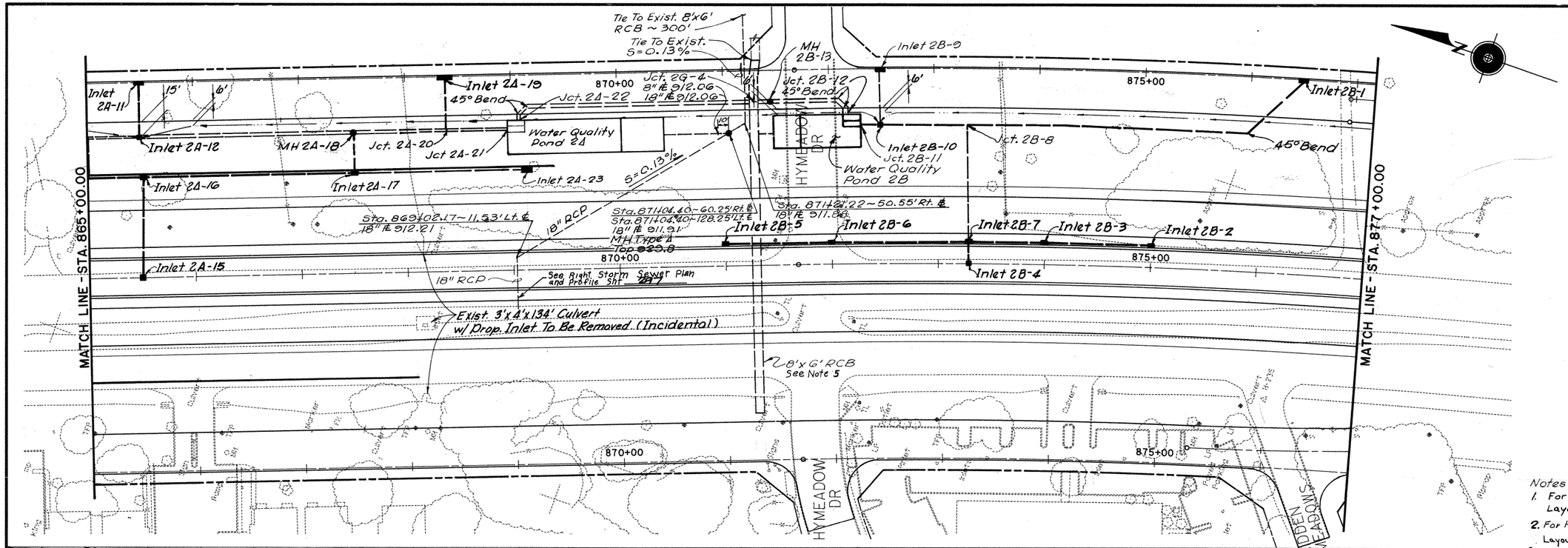

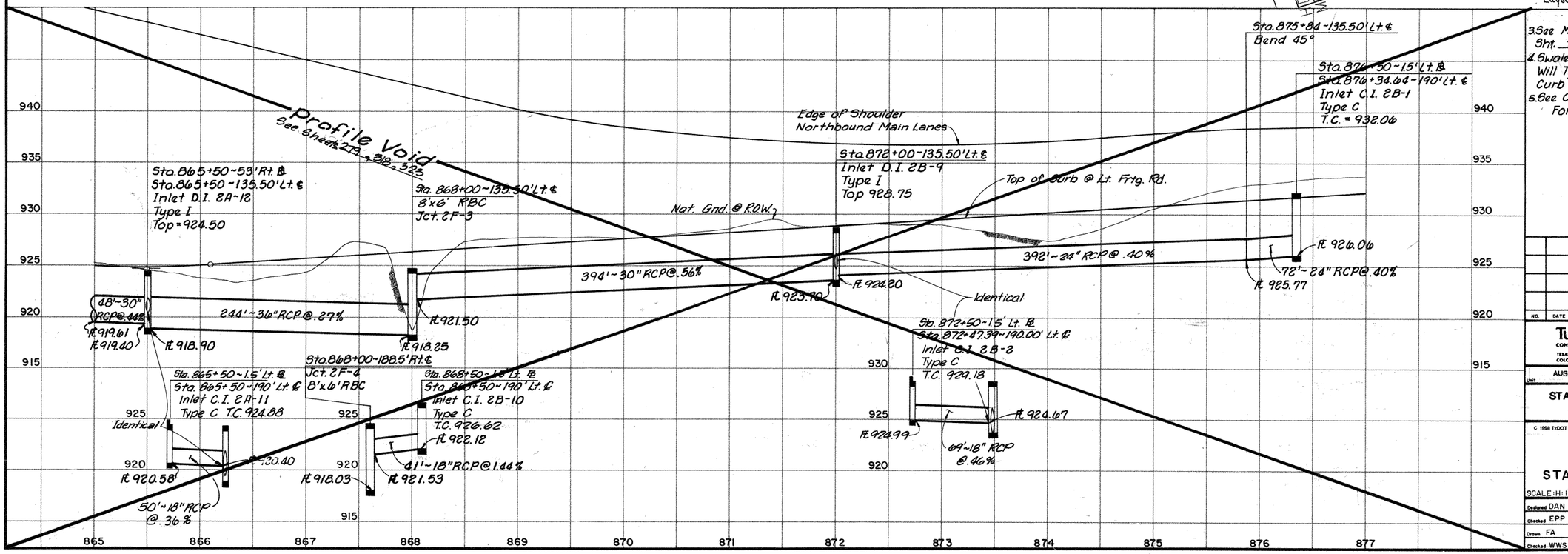

3. See Main Lane Storm Sewer Profiles Sht. 218 For Main Lane Drainage.
4. Swales And Inlets In Separation Area Will Typically Be 6' Behind Face Of Curb Unless Dimensioned Otherwise.
5. See Cross Culvert Profiles Sht. 322 For Additional Information.

Robert W. Barnett
5-09-88

NO.	DATE	REVISION	APPROVED

Turner Collie & Braden Inc.
CONSULTING ENGINEERS
TEXAS AUSTIN/DALLAS/HOUSTON/PORT ARTHUR
COLORADO DENVER

Unit	Job No.	Approved
AUSTIN	72-07401-022	

STATE DEPARTMENT OF HIGHWAYS AND PUBLIC TRANSPORTATION

© 1998 TxDOT

LEFT STORM SEWER PLAN & PROFILE STA. 865+00 TO STA. 877+00

SCALE: H: 1" = 50' V: 1" = 5'

Designed DAN	FED. RD. DIV. NO.	STATE	FEDERAL AID PROJECT NO.				HIGHWAY NO.
Checked EPP	6	TEXAS	NH 99(556)				U.S. 183
Drawn FA	STATE DIST. NO.	COUNTY	CONTROL NO.	SECTION NO.	JOB NO.		SHEET NO.
Checked WWS	14	WILLIAMSON	151	05	072		217

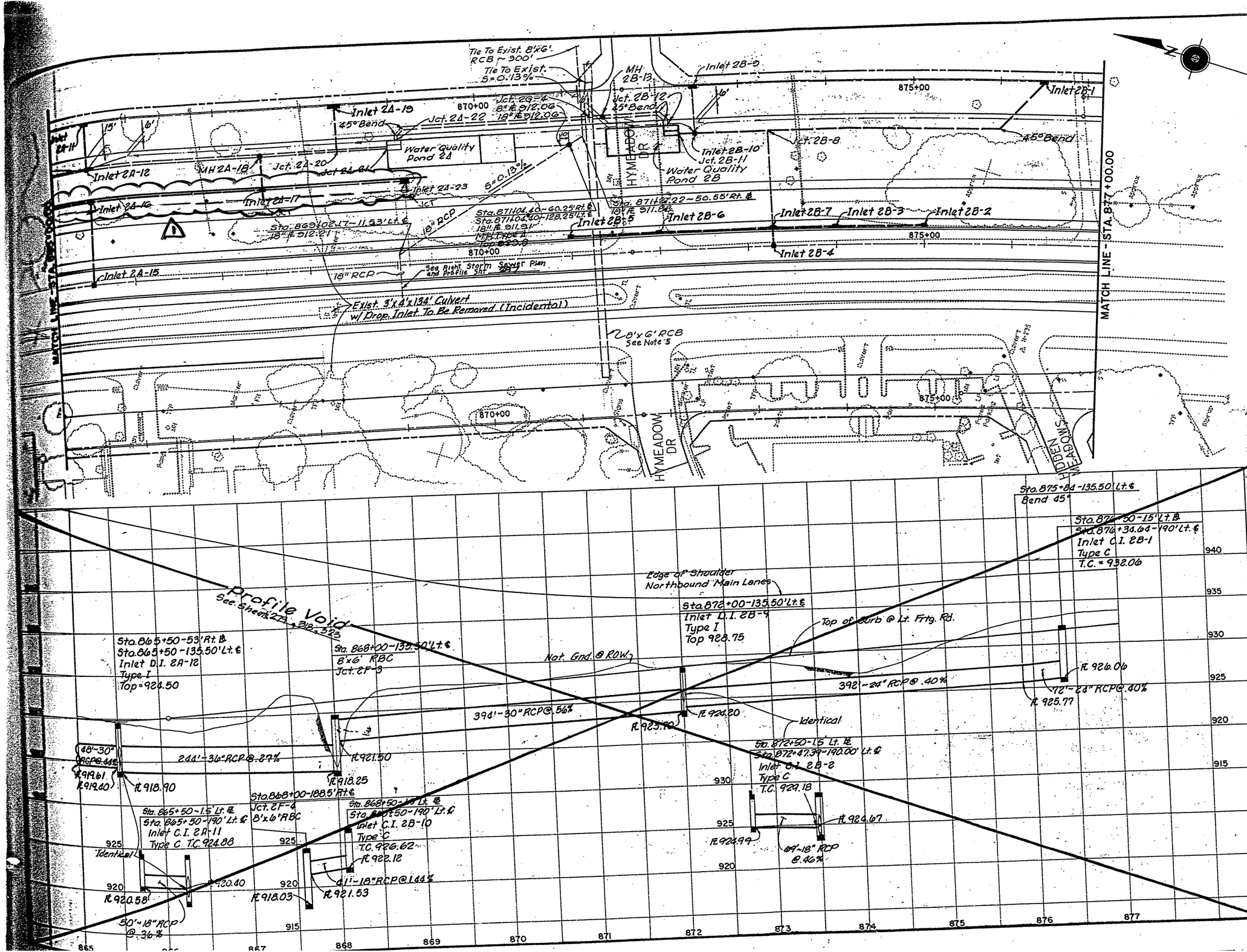

Notes:
1. For Hymeadow (2A) Water Quality Pond Layout See Sht. 252
2. For Hymeadow (2B) Water Quality Pond Layout See Sht. 253
3. See Main Lane Storm Sewer Profiles Sht. 318 For Main Lane Drainage.
4. Swales And Inlets In Separation Area Will Typically Be 6' Behind Face Of Curb Unless Dimensioned Otherwise.
5. See Cross Culvert Profiles Sht. 323 For Additional Information.

STATE OF TEXAS
Robert W. Barnett
49537
REGISTERED PROFESSIONAL ENGINEER
Robert W. Barnett
5-09-88

NO.	DATE	REVISION	APPROVED
1		C-o. 25	

Turner Collie & Braden Inc.
CONSULTING ENGINEERS
TEXAS AUSTIN/DALLAS/HOUSTON/PORT ARTHUR
COLORADO DENVER

AUSTIN | Job No. 72-07401-022 | Approved

STATE DEPARTMENT OF HIGHWAYS AND PUBLIC TRANSPORTATION

C 1996 TxDOT

LEFT STORM SEWER PLAN & PROFILE
STA. 865+00 TO STA. 877+00

SCALE: H: 1"=50' V: 1"=5'

Designed DAN	FED. RD. DIV. NO.	STATE	FEDERAL AID PROJECT NO.				HIGHWAY NO.
Checked EPP	6	TEXAS	NH-99(556)				U.S. 183
Drawn FA	STATE DIST. NO.	COUNTY	CONTROL NO.	SECTION NO.	JOB NO.		SHEET NO.
Checked W.W.S	14	WILLIAMSON	151	05	072		278

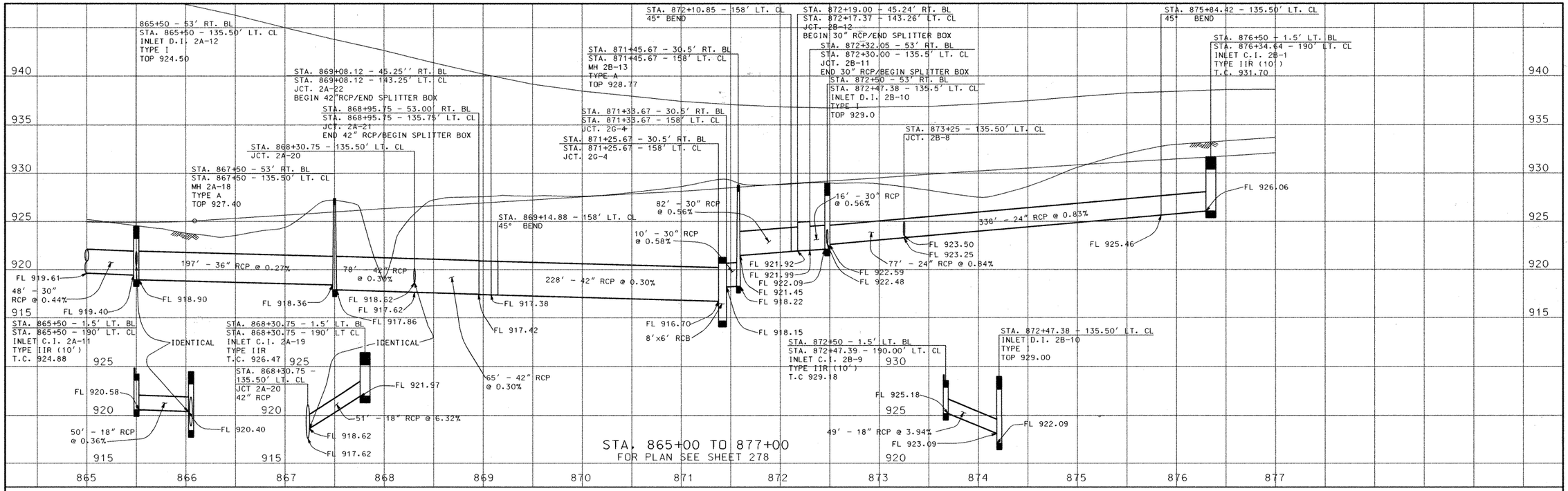

STA. 865+00 TO 877+00

FOR PLAN SEE SHEET 278

STATE OF TEXAS
REBECCA A. BILLS
82587
REGISTERED PROFESSIONAL ENGINEER

Rebecca A. Bills
5-3-99

Turner Collie & Braden Inc.
ENGINEERS • PLANNERS • PROJECT MANAGERS

AUSTIN | 72-07401-022

Texas Department of Transportation

©1998 TxDOT

LEFT STORM SEWER PROFILES

SCALE: H:1"=50', V:1"=5'

Designed KKY	FED. RD. DIV. NO. 6	STATE TEXAS	FEDERAL AID PROJECT NO. NH 99(556)			REFERENCE NO. U.S.183
Checked DLG						
Drawn JAM	STATE DIST. NO. 14	COUNTY WILLIAMSON	CONTROL NO. 0151	SECTION NO. 05	JOB NO. 072	SHEET NO. 279
Checked DLG						

DATE: 03/23/99
JOB No: 72-07401-022
PATH: t:\ 07401022\drainage\pro865l.dgn

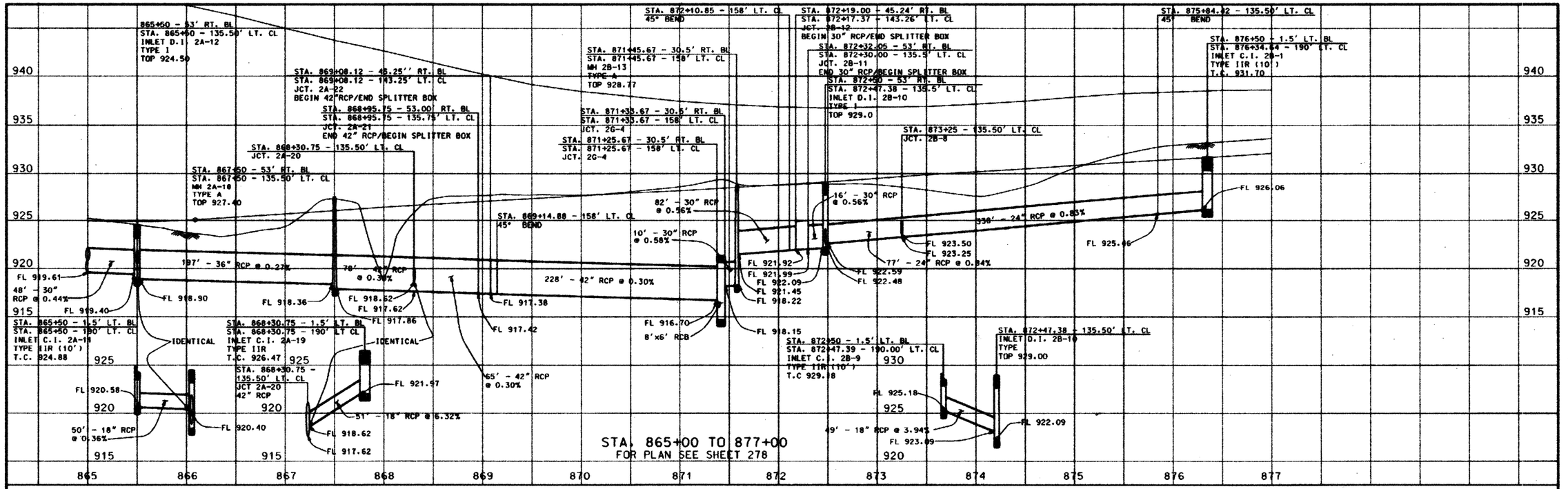

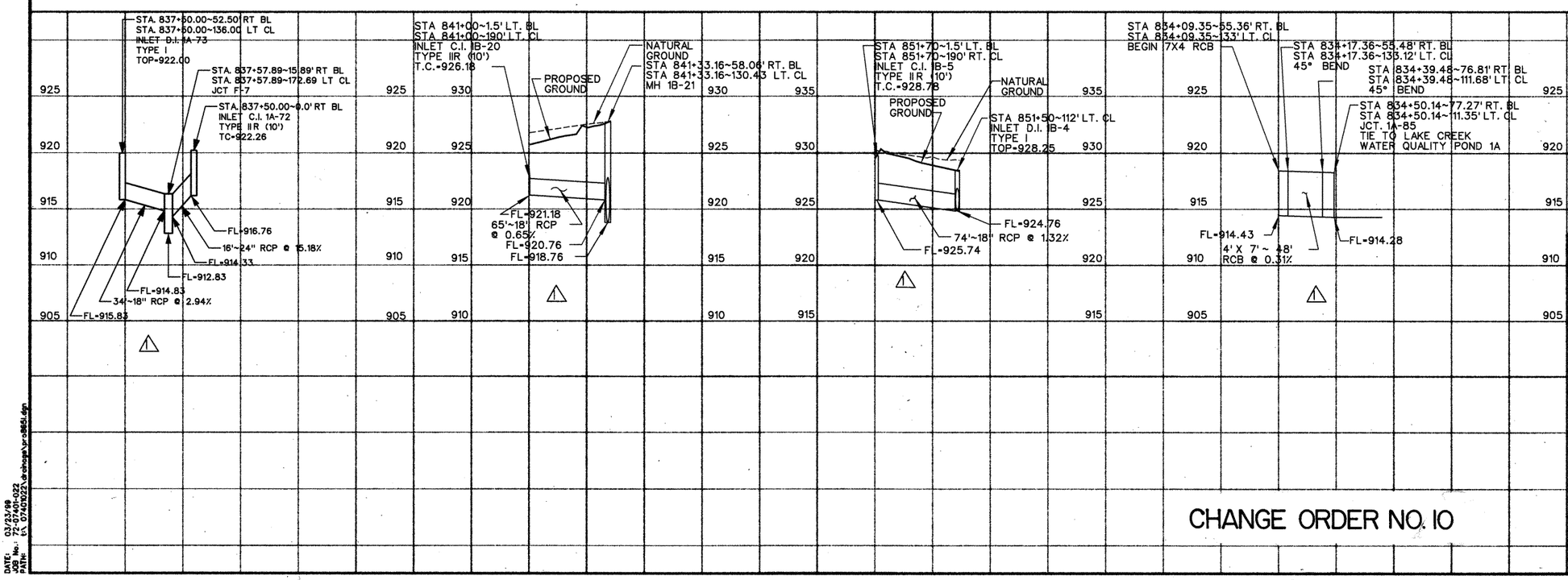

CHANGE ORDER NO. 10

DATE: 03/23/99
JOB No.: 72-07401-022
PATH: (\ 07401022\drainage\vr3850.dgn

STATE OF TEXAS
MARK E. JONES
81987
REGISTERED PROFESSIONAL ENGINEER
10-03-00
ONLY

STATE OF TEXAS
REBECCA A BILLS
82587
REGISTERED PROFESSIONAL ENGINEER
10-3-00

	CHANGE ORDER NO. 10

Turner Collie & Braden Inc.
ENGINEERS • PLANNERS • PROJECT MANAGERS

AUSTIN | T2-07401-022

Texas Department of Transportation

LEFT STORM SEWER PROFILES

SCALE: H:1"=50', V:1"=5'

Designed	KKY		STATE	FEDERAL AID PROJECT NO.			SHEET NO.
Checked	DLG	6	TEXAS	NH 99(556)			U.S.183
Drawn	JAM	STATE DIST.	COUNTY	CONTROL	SECTION	JOB	SHEET NO.
Checked	DLG	14	WILLIAMSON	0151	05	072	279A

	ITEM 100	ITEM 110	ITEM 110	ITEM 132	ITEM 132	ITEM 160	ITEM 160	ITEM 164	ITEM 164	ITEM 164	ITEM 168	ITEM 169	ITEM 169	ITEM 247	ITEM 310	ITEM 400	ITEM 400	ITEM 402	ITEM 421	ITEM 423	ITEM 432	ITEM 450	ITEM 450	ITEM 460	ITEM 462	ITEM 462	ITEM 462
	Prep. R.O.W.	EXCAV (CHANNEL)	EXCAV (POND)	EMBANK (TY B)	EMBANK (DC) (TY C) MOD	Furn & Plac Tpsl (Cl 2) (4in)	Furn & Plac Tpsl (Cl 2) (6in)	Cell Fib Mulch Seed	Drill Seed (Temp) (Warm)	Drill Seed (Perm) (Urban) (Clay)	Vegetative Watering	SOIL RET BLNKT (CL1) (TY A)	SOIL RET BLNKT (CL2)(TY G)	Fl Bs (TyD Gr6 Cl 2) (Comp In Plac)	Apsh Mat (MC-30)	Struct Excav (Sewer)	Struct Excav (Culv Large)	TRENCH EXCAV PROTECT	CL C Conc. (misc.)	Pond Wall (Cast-In-Place)	RIPRAP (CONC.) (CL B)	Rail (TY PR)	Rail (TY C4) (S)	CMP (Gal Stl 12in)	Conc Box Culv (2'x4')	Conc Box Culv (4'x4')	Conc Box Culv (6'x4')
	AC	CY	CY	CY	CY	SY	SY	SY	SY	SY	MG	SY	SY	TONS	GAL	CY	CY	LF	CY	SF	CY	LF	LF	LF	LF	LF	LF
620 Median Pond	–	–	7313	–	892	–	2144	–	1072	2144	54	–	–	–	–	4130	–	2165	81.3	9811	5.1	–	1055	35	–	–	468
LakeCreek Pond 1A	–	–	(2053)	–	–	–	–	–	–	–	–	–	–	–	–	107	–	95	–	–	–	–	–	6	–	–	–
LakeCreek Pond 1B	–	–	(1908)	–	–	–	–	–	–	–	–	–	–	–	–	42	–	54	–	–	–	–	–	6	–	–	–
LakeCreek Pond 1C	–	–	(1657)	–	–	–	–	–	–	–	–	–	–	–	–	7	–	10	–	–	–	–	–	6	–	–	–
Hymeadow Pond 2A	–	–	(3048)	–	–	–	–	–	–	–	–	–	–	–	–	115	–	62	–	–	–	–	–	6	–	–	–
Hymeadow Pond 2B	–	–	(1529)	–	–	–	–	–	–	–	–	–	–	–	–	2	–	7	–	–	–	–	–	6	–	–	–
Hymeadow Pond 2C	–	–	(2260)	–	–	–	–	–	–	–	–	–	–	–	–	50	–	34	–	–	–	–	–	6	–	–	–
Hymeadow Pond 2D1	–	–	(3286)	–	–	–	–	–	–	–	–	–	–	–	–	212	–	124	–	–	–	–	–	6	–	–	–
Hymeadow Pond 2D2	–	–	(4381)	–	–	–	–	–	–	–	–	–	–	–	–	1893	–	735	–	–	–	–	–	6	–	–	–
Pond Springs Pond	1.04	93	5300	–	441	–	5056	–	2420	4840	121	1403	–	45	–	1656	–	336	57.8	5002	78	–	–	13	–	44	–
Pond Springs Detention Pond	1.15	1162	22610	308	–	1459	2780	–	3391	6782	279	363	2186	141	50	2056	756	1135	–	24431	280	120	140	0	–	–	–
Woods Pond	7.1	2640	64420	1202	8970	–	34364	437	18275	36550	859	6500	6500	275	–	2016	–	649	–	–	166.5	–	–	75	152	–	–
TOTAL	9.29	3895	99643	1510	10303	1459	44,344	437	25158	50316	1313	8266	8686	461	50	12286	756	5406	139.1	39244	529.6	120	1195	171	152	44	468

	ITEM 462	ITEM 462	ITEM 462	ITEM 462	ITEM 462	ITEM 462	ITEM 464	ITEM 464	ITEM 464	ITEM 464	ITEM 465	ITEM 465	ITEM 465	ITEM 465	ITEM 466	ITEM 466	ITEM 466	ITEM 466	ITEM 466	ITEM 466	ITEM 466	ITEM 467	ITEM 481	ITEM 481	ITEM 481	ITEM 481	ITEM 529	ITEM 530
	Conc Box Culv (4'x4')	Conc Box Culv (6'x4')	Conc Box Culv (6'x5')	Conc Box Culv (7'x4')	Conc Box Culv (8'x4')	Conc Box Culv (8'x6')	RCP SEW (D-LOAD) (18")	RCP SEW (D-LOAD) (24")	RCP SEW (D-LOAD) (36")	RCP SEW (D-LOAD) (48")	MAN H (COMPL) TY A	INLET (COMPL) (DROP) (TY I)	INLET (COMPL) (DROP) (TY IB)	INLET (COMPL) (DROP) (TY II)	CULV HDWLL TY PW-45	CULV HDWLL TY MCW-P-15 MOD	CULV HDWLL TY MCW-P-30 MOD	CULV HDWLL TY MCW-P-45 MOD	CULV HDWLL TY MCW-F1-30	CULV HDWLL TY FW-N	CULV HDWLL TY FW-45	S.E.T. TYII	* P.V.C. PIPE (SCH 40) 4"	* P.V.C. PIPE (SCH 40) 6"	* P.V.C. PIPE (SCH 40) 8"	* P.V.C. PIPE (SCH 40) 12"	* CONC. CURB (TY II) (6 IN)	CONC. DRVWY
	LF	LF	LF	LF	LF	LF	LF	LF	LF	LF	EA	EA	EA	EA	EA	EA	EA	EA	EA	EA	EA	EA	LF	LF	LF	LF	LF	SY
620 Median Pond	–	468	–	–	–	–	1487	–	–	210	–	–	–	–	–	–	–	–	–	–	–	1	324	–	77	–	–	21
LakeCreek Pond 1A	–	–	–	–	–	–	–	–	–	–	–	–	–	–	–	–	–	–	–	–	–	–	144	25	100	–	–	–
LakeCreek Pond 1B	–	–	–	–	–	–	–	–	–	–	–	–	–	–	–	–	–	–	–	–	–	–	114	24	58	–	–	–
LakeCreek Pond 1C	–	–	–	–	–	–	–	–	–	–	–	–	–	–	–	–	–	–	–	–	–	–	120	25	14	–	–	–
Hymeadow Pond 2A	–	–	–	–	–	–	6	–	–	–	1	–	–	–	–	–	–	–	–	–	–	–	138	25	65	–	–	–
Hymeadow Pond 2B	–	–	–	–	–	–	–	–	–	–	–	–	–	–	–	–	–	–	–	–	–	–	63	25	11	–	–	–
Hymeadow Pond 2C	–	–	–	–	–	–	–	–	–	–	–	–	–	–	–	–	–	–	–	–	–	–	156	25	38	–	–	–
Hymeadow Pond 2D1	–	–	–	–	–	–	70	–	–	–	–	–	–	–	–	–	–	–	–	–	–	–	288	25	54	–	–	–
Hymeadow Pond 2D2	–	–	–	–	–	–	735	–	–	–	1	–	–	–	–	–	–	–	–	–	–	–	252	27	5	–	–	–
Pond Springs Pond	44	–	–	–	–	–	–	–	–	–	–	–	–	–	–	–	–	–	–	–	–	–	704	–	357	–	–	42
Pond Springs Detention Pond	–	–	96	–	81	84	–	136	287	563	2	3	1	3	–	2	2	–	–	1	–	–	–	–	–	–	90	30
Woods Pond	–	–	30	175	333	28	66	–	–	–	–	2	–	–	1	–	–	1	1	–	1	6	–	–	–	75	–	37
TOTAL	44	468	126	175	414	112	2364	136	287	773	4	5	1	3	1	2	2	1	1	1	1	7	2303	201	779	75	90	130

	ITEM 531	ITEM 550	ITEM 550	ITEM 550	ITEM 3116	ITEM 3116	ITEM 3116	ITEM 5014	ITEM 5014	ITEM 5014	ITEM 8608
	CONC. WALKWAY (5 IN)	CHAIN LINK FENCE (6FT)	VEH. GATE (DOUBLE) (12FT)	VEH. GATE (DOUBLE) (20FT)	ASPH CONC (TY C) (SURF) (PV 32 MIN)	ASPH CONC. (TY C) 2"	ASPH CONC. (TY C) 1½"	GABIONS (3'X1') (GALV)	GABIONS (3'X3') (GALV)	GABIONS (6'X0.5') (GALV)	SAND FILTER SYSTEM
	SY	LF	EA	EA	TONS	TONS	TONS	CY	CY	CY	EA
620 Median Pond	–	–	–	2	–	–	–	–	20	6.7	1 (60'X64')
LakeCreek Pond 1A	–	–	–	–	–	–	–	6.6	10	–	1 (29'X30')
LakeCreek Pond 1B	–	–	–	–	–	–	–	6.6	10	–	1 (24'X30')
LakeCreek Pond 1C	–	–	–	–	–	–	–	6.6	10	–	1 (25'X30')
Hymeadow Pond 2A	–	–	–	–	–	–	–	6.6	10	–	1 (28'X30')
Hymeadow Pond 2B	–	–	–	–	–	–	–	6.6	10	–	1 (15'X30')
Hymeadow Pond 2C	–	–	–	–	–	–	–	6.6	10	–	1 (29'X30')
Hymeadow Pond 2D1	–	–	–	–	–	–	–	6.6	10	–	1 (30'X37')
Hymeadow Pond 2D2	–	–	–	–	–	–	–	6.6	10	–	1 (30'X47')
Pond Springs Pond	–	1050	2	–	–	8.3	–	–	38	10.3	1 (40'X93')
Pond Springs Detention Pond	46	2060	1	–	12	4.1	7.7	–	–	–	–
Woods Pond	–	2010	1	–	–	56.2	–	–	–	–	–
TOTAL	46	5120	4	2	12	68.6	7.7	52.8	138	17.0	10

NOTES:

( ) INCIDENTAL. FOR CONTRACTOR'S INFORMATION ONLY.

* SUBSIDIARY TO VARIOUS BID ITEMS.

Turner Collie & Braden Inc.
ENGINEERS • PLANNERS • PROJECT MANAGERS

AUSTIN | Job No. 61-99100-012 | File

©1998 TxDOT

US 183
WATER QUALITY AND DETENTION POND SUMMARY SHEET

SCALE: AS NOTED

Designed	FED. RD. DIV. NO.	STATE	FEDERAL AID PROJECT NO.		HIGHWAY NO.
KKY	6	TEXAS	NH 09(556)		US 183
Drawn	STATE DIST. NO.	COUNTY	CONTROL NO.	SECTION NO.	JOB NO.	SHEET NO.
JAM	AUS	WILLIAMSON	0151	05	072	48
Checked						
DLG						

DATE: 04/10/99
JOB No.: 72-07401-022
PATH: t:\ 07401022\drainage\wqptbl2.dgn

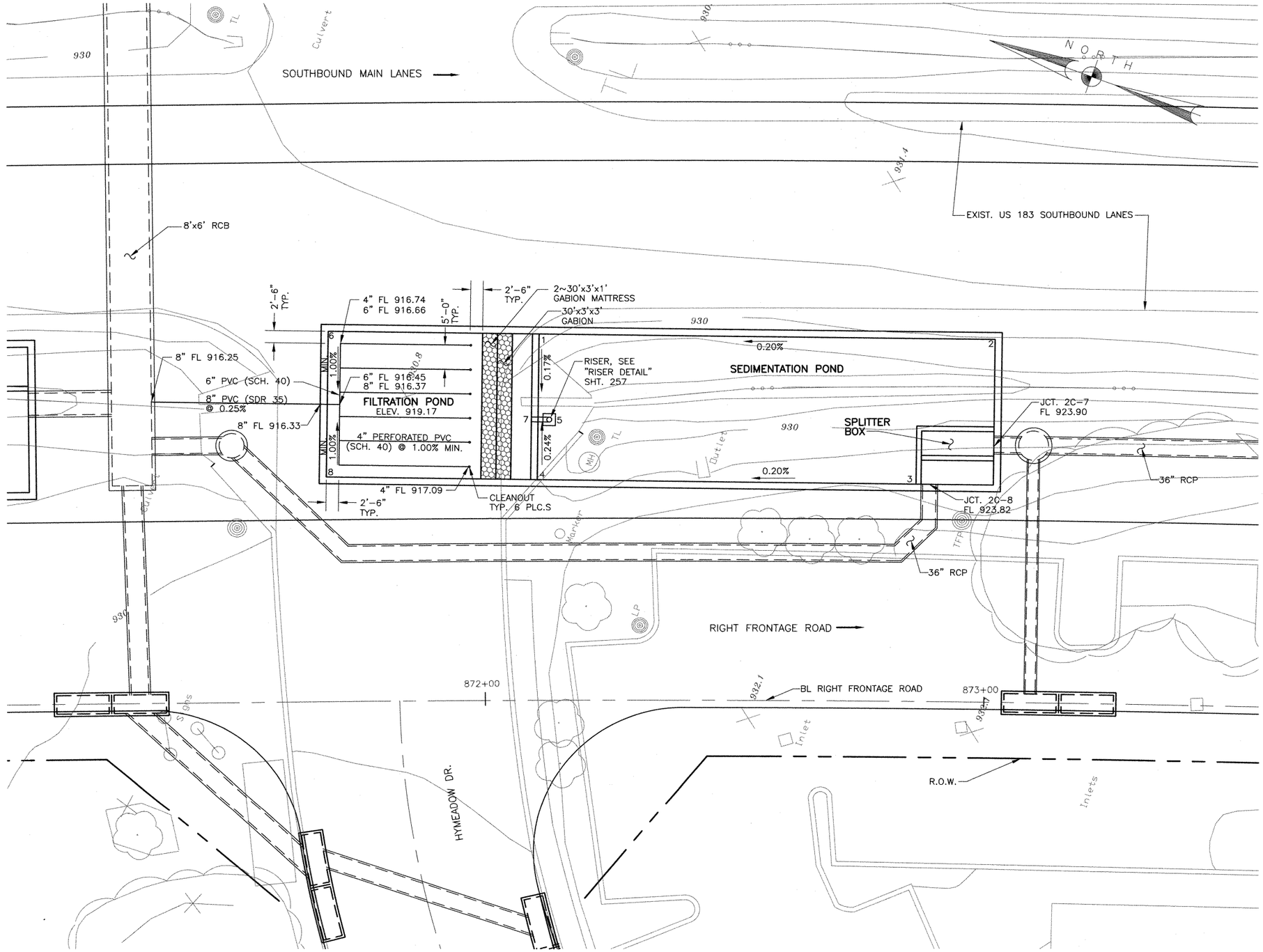

POINT LOCATION TABLE

POINT No.	STATION BL RT. FRT. RD.	OFFSET	ELEV. FL
1	872+11.06	75.49' LT.	919.22
2	873+01.34	74.73' LT.	919.40
3	872+85.95	45.76' LT.	919.37
4	872+10.57	45.49' LT.	919.22
5	872+13.00	57.87' LT.	919.19
6	871+69.31	76.34' LT.	919.17
7	872+09.46	57.93' LT.	919.17
8	871+68.59	46.35' LT.	919.17

NOTE:
FOR CURRENT INFORMATION ON GRAVITY & FORCE MAINS IN REFERENCE TO CHANGE ORDER #10, CONTACT CITY OF AUSTIN WATER & WASTEWATER DEPT.

NOTES:

1. SEE WATER QUALITY POND STRUCTURAL DETAILS SHEETS 261a – 261d FOR POND DIMENSIONS AND REINFORCEMENT.
2. SEE STORM SEWER PROFILE SHEETS 298 FOR FLOWLINES OF RCPs/RCBs AT SPLITTER BOX.
3. SEE WATER QUALITY POND TYPICAL SECTIONS AND DETAILS, SHEET 257 FOR FILTRATION POND DETAILS.

STATE OF TEXAS
REBECCA A. BILLS
32587
REGISTERED PROFESSIONAL ENGINEER

Rebecca A. Bills
5-3-99

Turner Collie & Braden Inc.
ENGINEERS • PLANNERS • PROJECT MANAGERS

AUSTIN | 72-07401-022

Texas Department of Transportation

© 1998 TxDOT

HYMEADOW (2C) UNDERGROUND WATER QUALITY POND LAYOUT

SCALE: 1"=10'

Designed	RAB	FED. RD. DIV. NO.	STATE	FEDERAL AID PROJECT NO.				HIGHWAY NO.
Checked	CDB	6	TEXAS	NH 99(556)				U.S.183
Drawn	GWS	STATE DIST. NO.	COUNTY	CONTROL NO.	SECTION NO.	JOB NO.		SHEET NO.
Checked	DLG	14	WILLIAMSON	0151	05	072		254

DATE: 04/28/99
JOB NO. 72-07401-022/PONDS/HYMD2C.dwg

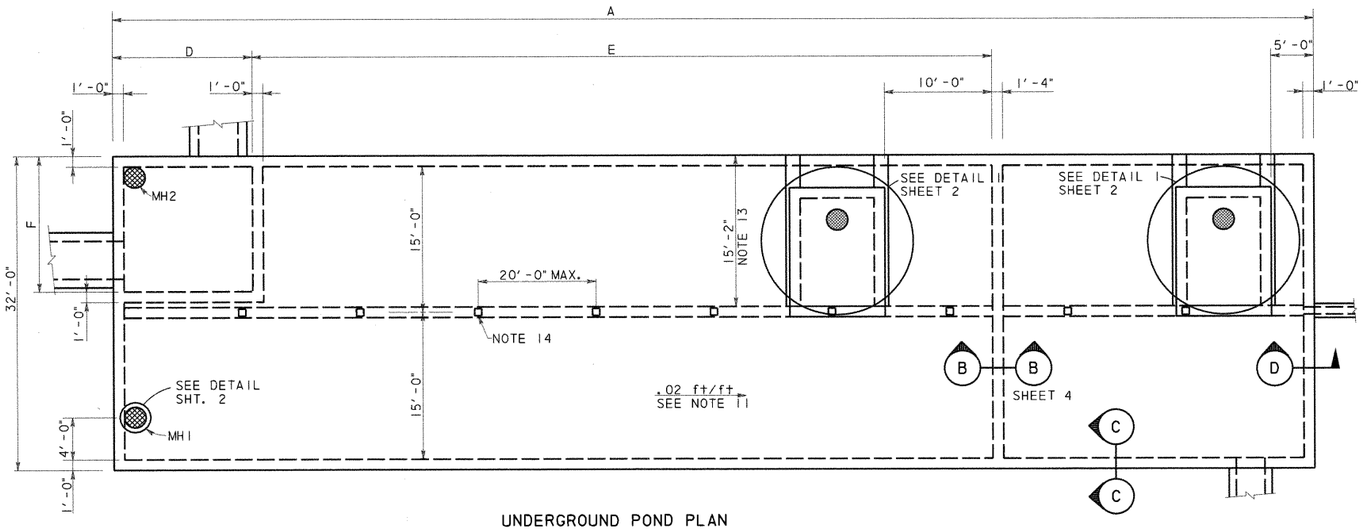

UNDERGROUND POND PLAN

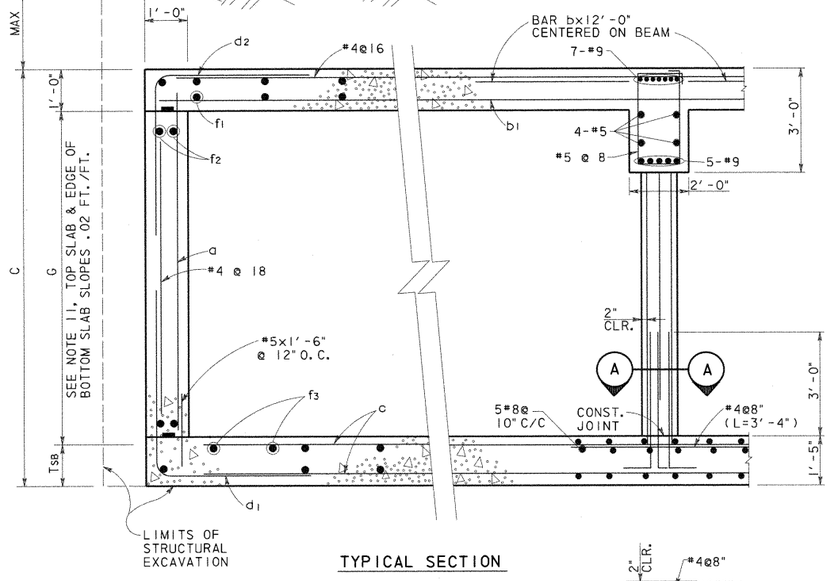

TYPICAL SECTION

SECTION C-C
N. T. S.

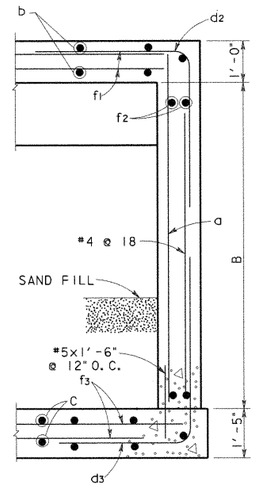

SECTION D-D
N. T. S.

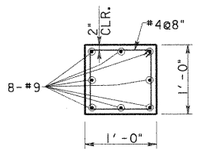

SECTION A-A
SCALE: 1"=1'-0"

UNDERGROUND POND REINFORCING TABLE																		
POND DESIGNATION	BARS a		BARS b		BARS b1		BARS c		BARS d1		BARS d2		BARS d3		BARS f1, f2, f3(#4)			
	SIZE	SPA.	SIZE	SPA.	SIZE	SPA.	SIZE	SPA.	SIZE	SPA.	SIZE	SPA.	SIZE	SPA.	f1 Spa.	f2 Spa.	f3 Spa.	
1A	#6	@12"	#8	@8"	#6	@8"	#8	@10"	#6	@6"	#6	@6"	#6	@6"	@6"	@12"	@7"	
1B	#6	@12"	#8	@8"	#6	@8"	#8	@10"	#6	@6"	#6	@6"	#6	@6"	@6"	@12"	@7"	
1C	#6	@12"	#8	@8"	#6	@8"	#8	@10"	#7	@6"	#6	@6"	#7	@6"	@6"	@12"	@7"	
2A	#6	@12"	#8	@8"	#6	@8"	#8	@10"	#6	@6"	#6	@6"	#6	@6"	@6"	@12"	@7"	
2B	#6	@12"	#8	@8"	#6	@8"	#8	@10"	#6	@6"	#6	@6"	#6	@6"	@6"	@12"	@7"	
2C	#7	@12"	#8	@8"	#6	@8"	#8	@10"	#7	@6"	#6	@6"	#8	@6"	@6"	@12"	@7"	
2D1	#7	@12"	#8	@8"	#6	@8"	#8	@10"	#7	@6"	#6	@6"	#8	@6"	@6"	@12"	@7"	
2D2	#7	@12"	#8	@8"	#6	@8"	#8	@10"	#7	@6"	#6	@6"	#8	@6"	@6"	@12"	@7"	

UNDERGROUND POND DIMENSION TABLE											
POND DESIGNATION	A	B	C	D	E	F	G			MAX FILL	AVERAGE FILL
1A	160'-4"	9'-2"	9'-3"	22'-0"	97'-0"	19'-0"	7'-0"			11'-0"	7'-6"
1B	128'-10"	9'-2"	9'-3"	15'-6"	77'-0"	11'-0"	7'-0"			8'-6"	5'-6"
1C	118'-10"	9'-8"	9'-9"	15'-6"	66'-0"	11'-0"	7'-6"			8'-3"	5'-6"
2A	147'-10"	9'-2"	9'-3"	15'-6"	92'-0"	11'-0"	7'-0"			9'-3"	6'-9"
2B	86'-10"	9'-2"	9'-3"	15'-6"	44'-0"	11'-0"	7'-0"			6'-9"	4'-9"
2C	133'-10"	10'-2"	10'-3"	15'-6"	77'-0"	11'-0"	8'-0"			4'-9"	3'-6"
2D1	181'-4"	10'-2"	10'-3"	22'-0"	110'-0"	13'-0"	8'-0"			11'-10"	7'-3"
2D2	211'-4"	10'-2"	10'-3"	13'-0"	139'-0"	22'-0"	8'-0"			9'-5"	7'-9"

GENERAL NOTES: UNDERGROUND PONDS

1. DESIGNED ACCORDING TO CURRENT AASHTO 1996 STANDARD SPECIFICATIONS.
2. DESIGNED FOR HS20 LOADING AND TO THE MAXIMUM FILL HEIGHT SHOWN.
3. ALL REINFORCING SHALL BE GRADE 60 KSI.
4. ALL CONCRETE SHALL BE CLASS "C".
5. REINFORCING BARS SHALL BE ADJUSTED TO PROVIDE A MINIMUM OF 1½" CLEAR COVER, UNLESS OTHERWISE NOTED.
6. ALL DIMENSIONS ARE IN FEET AND INCHES AND ALL MASS IS IN POUNDS UNLESS OTHERWISE NOTED.
7. SEE POND LAYOUT SHEETS FOR POND ORIENTATION AND LOCATION; PLUS THE ORIENTATION, SIZE AND LOCATION OF INCOMING AND OUTGOING DRAINAGE LINES.
8. WATERSTOPS SHALL BE HYDROPHILIC WATERSTOPS SUCH AS ADEKA MC-2010M.
9. PROVIDE 3" CLEARANCE WHERE CAST AGAINST SOIL.
10. PROVIDE CONSTRUCTION JOINTS IN WALLS AT A MAXIMUM SPACING OF 30 FOOT ON CENTER. MAXIMUM SLAB AREA TO BE PLACED WITHOUT CONSTRUCTION JOINTS IS 3000 SQUARE FEET. SLAB AND WALL CONSTRUCTION JOINTS SHALL ALIGN.
11. SEE POND LAYOUT FOR FLOWLINE. BOTTOM SLAB SHALL PROVIDE A .02 FT/FT SLOPE ALONG THE EDGE OF WALL. PERIMETER WALL HEIGHT (G) SHALL BE CONSTANT.
12. OFF SET RISER TO MISS ROOF SLAB BEAM.
13. AT UNDERGROUND PONDS 2C AND 2D2 THE ACCESS HATCH IS OPPOSITE HAND FROM WHAT IS SHOWN AND IS LOCATED FROM THE OPPOSITE WALL TO AVOID INTERFERENCE WITH THE DRAINAGE DITCH.
14. COLUMN SPACING IS 20.0 FT O.C. MAX. UNLESS NOTED OTHERWISE. THERE WILL BE NO COLUMNS WITHIN THE SPLITTER BOX, WHERE SPLITTER BOX EXTENDS TO THE ROOF BEAM OR BEYOND THE BEAM IS SUPPORTED BY THE SPLITTER BOX WALLS.
15. LAP TOP BARS @ MID SPAN AND BOTTOM BARS @ SUPPORTS.

ESTIMATED QUANTITIES*			
POND DESIGNATION	CONCRETE (CY)	REINFORCING BARS (LBS)	EXCAVATION (CY)
1A	623	144,925	
1B	505	115,855	
1C	476	109,213	
2A	572	131,682	
2B	356	82,752	
2C	536	123,427	
2D1	712	165,990	
2D2	823	191,615	

* QUANTITIES FOR CONTRACTOR'S ESTIMATE ONLY. ALL ITEMS ARE SUBSIDIERY TO THE POND ITEM.

STATE OF TEXAS
WILLY R. BURNS
44162
REGISTERED
ENGINEER
4/2/99

NO. DATE REVISION APPROVED

Turner Collie & Braden Inc.
Engineers • Planners • Project Managers

DATE SUTTON JOB NO. 62-14004-011 ADDENDUM

© 1998 Texas Department of Transportation

US 183

WATER QUALITY PONDS
STRUCTURAL DETAILS

SHEET 1 OF 11

Designed	WRB	FED. RD. DIV. NO.	STATE	FEDERAL AID PROJECT NO.				HIGHWAY NO.
Checked		6	TEXAS	NH99(556)				US 183
Drawn	MR	STATE DIST. NO.	COUNTY	CONTROL NO.	SECTION NO.	JOB NO.		SHEET NO.
Checked		14	WILLIAMSON	151	5	072		261a

UGPDTL1.DGN

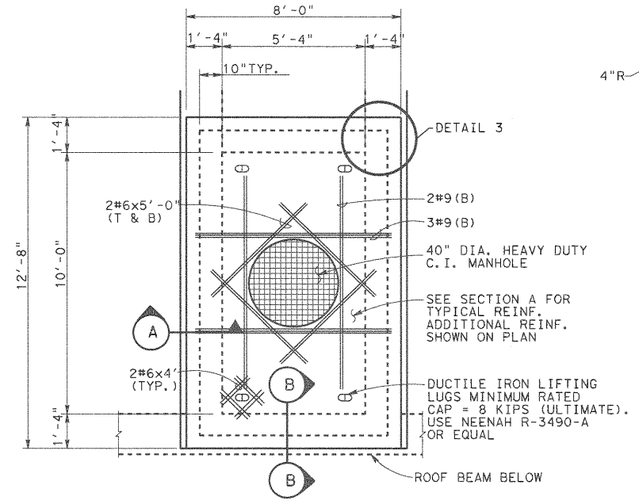

MAINTENANCE ACCESS HATCH

DETAIL 1

SCALE: 3/8" = 1'-0"

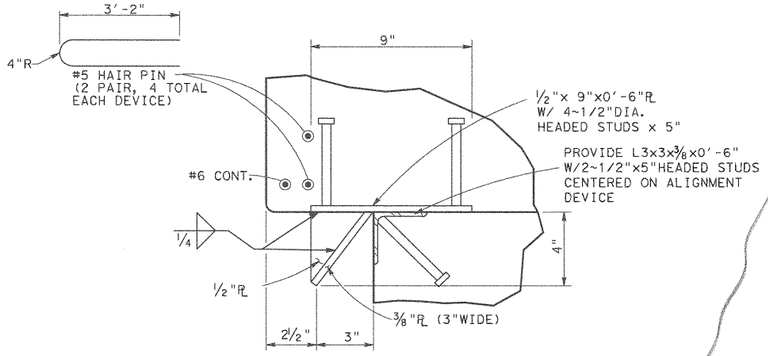

PROVIDE 8 DEVICES (GALV. AFTER FABRICATION) 2 EACH SIDE

DETAIL 2

ALIGNMENT DEVICE

SCALE: 3" = 1'-0"

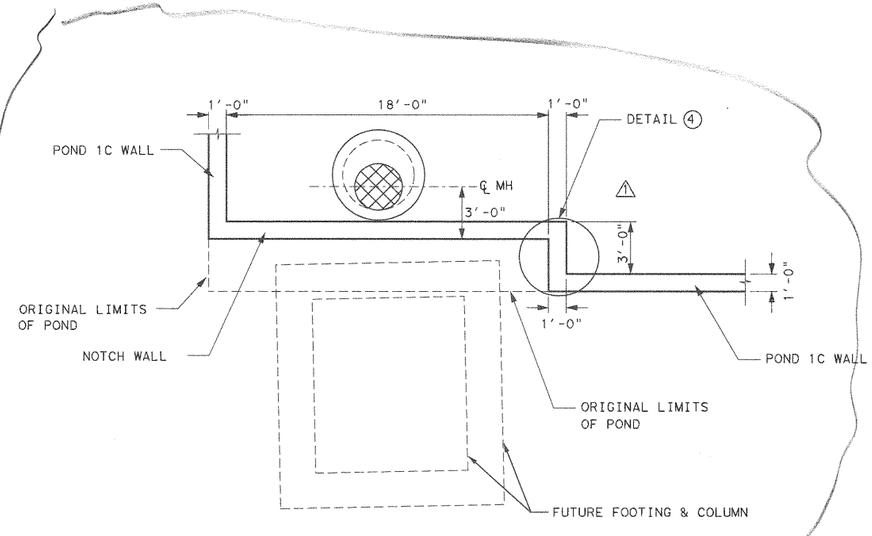

POND 1C MODIFICATION

SCALE: 3" = 1'-0"

SECTION A

SCALE: 1/2" = 1'-0"

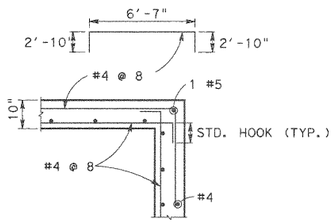

DETAIL 3

HORIZONTAL REINFORCEMENT

SCALE: 1/2" = 1'-0"

ACCESS HATCH		
POND	H1 (±)	ELEV. A
1A	8'-8"	929.20
1B	6'-7"	931.98
1C	6'-7"	931.62
2A	8'-4"	932.04
2B	5'-10"	932.20
2C	4'-10"	933.06
2D1	7'-4"	934.04
2D2	7'-11"	932.50

MANHOLE TABLE		
POND	H2	H3
1A	9'-0"	5'-0"
1B	9'-0"	4'-0"
1C	8'-0"	4'-0"
2A	9'-0"	4'-0"
2B	7'-0"	4'-0"
2C	3'-0"	5'-0"
2D1	10'-0"	4'-0"
2D2	7'-0"	5'-0"

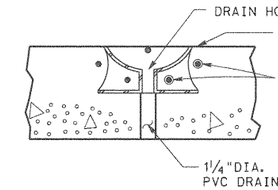

SECTION B

SCALE: 1"= 1'-0"

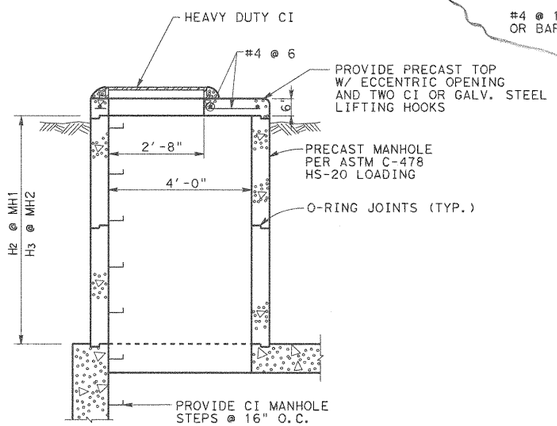

MANHOLE DETAIL

SCALE: 1/2" = 1'-0"

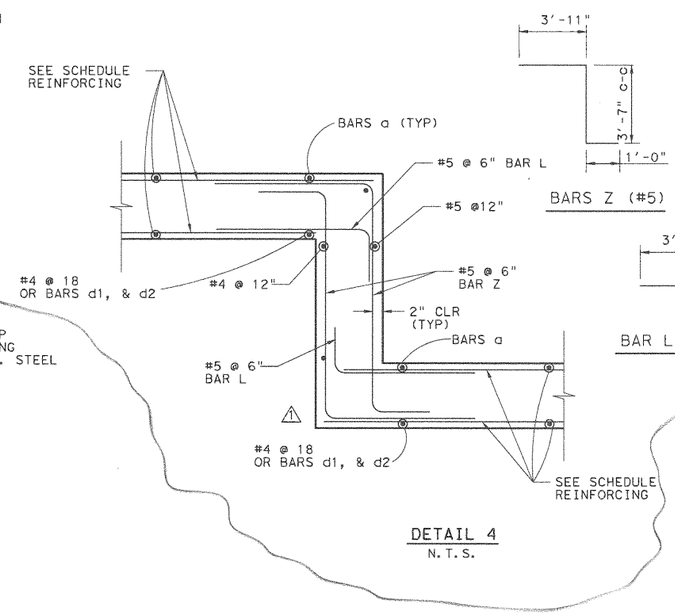

DETAIL 4

N.T.S.

STATE OF TEXAS
WALLY R. BURNS
44162
REGISTERED PROFESSIONAL ENGINEER
Wally R Burns
01/29/01

1	JAN. 26 01	ADD NOTCH	WRB
NO.	DATE	REVISION	APPROVED

Turner Collie & Braden Inc.
Engineers • Planners • Project Managers

TRANSPORTATION | Unit | Job No. 81-07401-024 | Approved

© 1998 Texas Department of Transportation

US 183
WATER QUALITY PONDS
STRUCTURAL DETAILS

SCALE: AS NOTED — SHEET 2 OF 11

Designed	Checked	Drawn	Checked	FED. RD. DIV. NO.	STATE	FEDERAL AID PROJECT NO.				HIGHWAY NO.
WRB		MR		6	TEXAS	NH99(556)				US 183
				STATE DIST. NO.	COUNTY	CONTROL NO.	SECTION NO.	JOB NO.		SHEET NO.
				14	WILLIAMSON	151	5	072		261b

UGPDT2.DGN

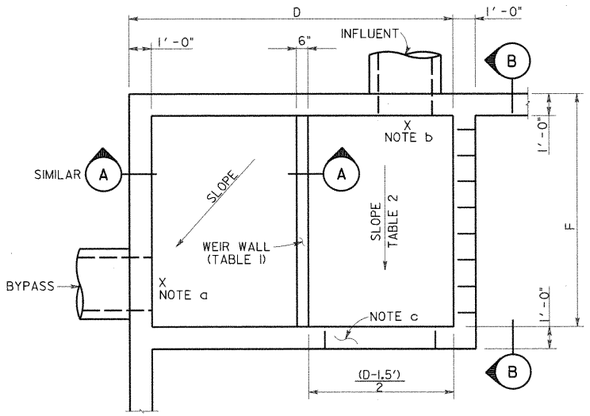

SEE TABLE SHEET I OF II
FOR DIMENSIONS D & F

SPLITTER BOX PLAN (POND 2D2)

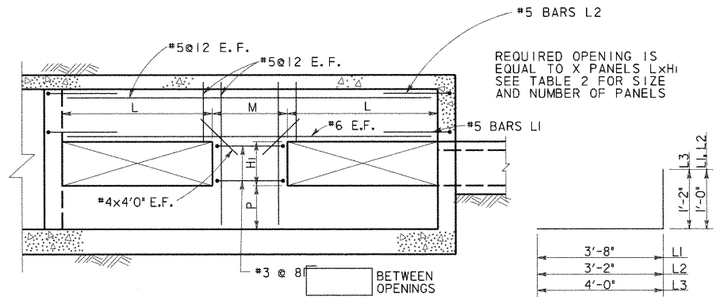

SECTION B

BARS L

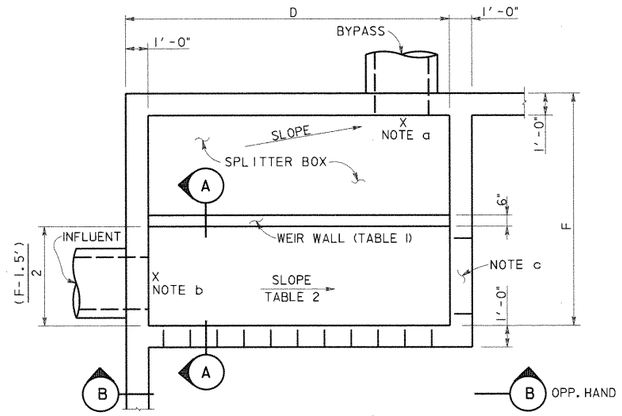

SEE TABLE SHEET I OF II
FOR DIMENSIONS D & F

SPLITTER BOX PLAN (TYPICAL)

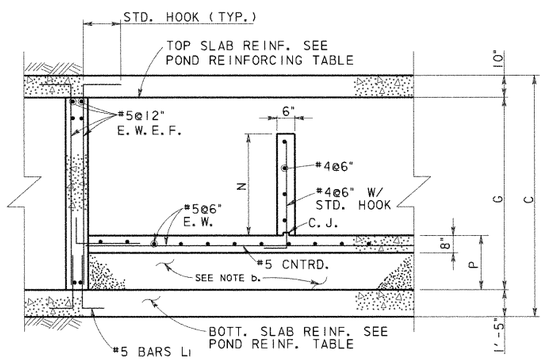

SECTION A

TABLE I BYPASS OUTFALL				
POND	BYPASS LINE ELEVATION	BYPASS WEIR		
		TOP OF WALL ELEV.	N*	P
1A	914.23	917.78	3'-6"	1'-6"
1B	918.44	921.00	2'-6"	2'-6"
1C	918.39	922.75	4'-3"	1'-9"
2A	917.38	920.92	3'-6"	1'-6"
2B	921.92	923.49	1'-6"	3'-6"
2C	923.82	925.90	2'-0"	4'-6"
2D1	920.53	923.63	3'-0"	2'-6"
2D2	916.71	921.85	5'-0"	1'-0"

*N IS MINIMUM DIMENSION, SPLITTER BOX FLOOR SLOPES, HOLD TOP OF WEIR WALL CONSTANT.

TABLE 2 INFLUENT LINE						
POND	INFLUENT ELEV.	SLOPE %	INFLUENT WALL			
			OPENINGS X	M	L	HI
1A	914.28	0.29	4	3'-0"	3'-0"	2'-6"
1B	918.50	0.48	3	2'-9"	3'-0"	1'-6"
1C	918.50	0.85	3	2'-9"	3'-0"	1'-6"
2A	917.42	0.33	3	2'-9"	3'-0"	1'-6"
2B	921.99	0.54	1	0	14'-8"	0'-9"
2C	923.90	0.62	3	2'-9"	3'-0"	1'-0"
2D1	920.63	0.53	3	6'-0"	3'-0"	2'-0"
2D2	916.85	0.78	4	3'-8"	2'-6"	2'-0"

NOTES:

a. SEE TABLE I THIS SHEET FOR OUT FLOW ELEVATION. SLOPE SLAB FROM OVERFLOW WEIR TO OUTFALL.

b. SEE TABLE 2 FOR INFLUENT ELEVATION. TOP OF SPLITTER BOX SLAB TO MATCH INFLOW ELEVATION. AT POND 2D1 THE ELEVATION SHOWN REPRESENTS A 6" DROP FROM THE INFLUENT FLOWLINE. CONTRACTOR MAY USE CEMENT STABILIZED SAND UNDER THE SLAB OR PLACE CONCRETE FOR THE FILL.

c. PROVIDE 3'x .75' OPENING AT BOTTOM OF SPLITTER BOX WALL AT END OF CHANNEL.

STATE OF TEXAS
WILLY R. BURNS
54103
REGISTERED
PROFESSIONAL ENGINEER
4/28/99

NO.	DATE	REVISION	APPROVED

Turner Collie & Braden Inc.
Engineers • Planners • Project Managers

SUTTON — Job No. 62-14004-011

© 1998 Texas Department of Transportation

US 183
WATER QUALITY PONDS
STRUCTURAL DETAILS

SCALE: AS NOTED — SHEET 3 OF 11

Designed	WRB	FED. RD. DIV. NO.	STATE	FEDERAL AID PROJECT NO.				HIGHWAY NO.
Checked		6	TEXAS	NH99(556)				US 183
Drawn	MR	STATE DIST. NO.	COUNTY	CONTROL NO.	SECTION NO.	JOB NO.		SHEET NO.
Checked		14	WILLIAMSON	151	5	072		261c

UGPDT3.DGN

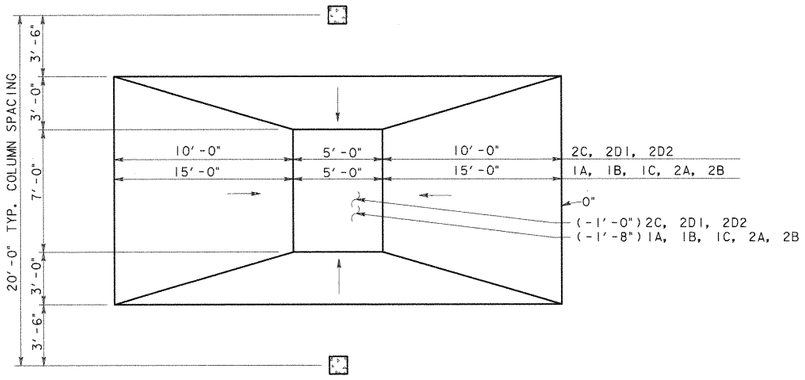

PLAN

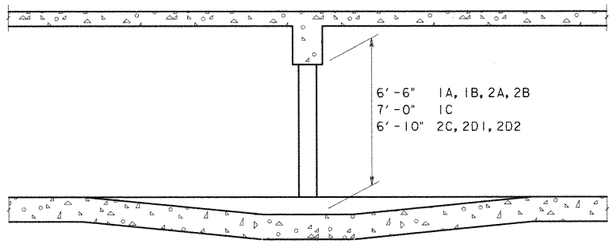

SECTION

REINFORCING LAP SPLICE & EMBEDMENT SCHEDULE						
BAR SIZE	MIN LAP LENGTH		MIN EMBEDMENT LENGTH			
	TOP BARS	OTHER BARS	TOP BARS		OTHER BARS	
			STR.	STD. HOOK	STR.	STD. HOOK
4	24"	20"	17"	9"	12"	7"
5	30"	24"	21"	10"	15"	8"
6	36"	28"	25"	10"	18"	8"
8	58"	41"	42"	15"	30"	12"

PROVIDE ONE CROSS OVER DETAIL FOR E ≤ 80'
PROVIDE TWO CROSS OVER DETAILS FOR E > 80'

CROSS OVER DETAIL
SCALE: 1/4" = 1'-0"

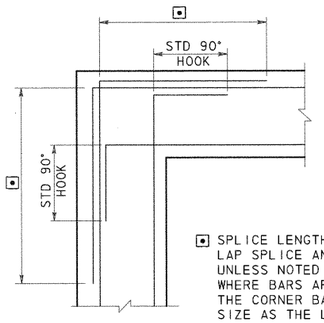

⊡ SPLICE LENGTH SEE REINFORCING LAP SPLICE AND EMBEDMENT TABLES. UNLESS NOTED OTHERWISE ON DWGS WHERE BARS ARE DIFFERENT SIZE THE CORNER BAR SHALL BE SAME SIZE AS THE LARGER BAR

CORNER REINFORCING
FOR WALLS OR GRADE BEAMS

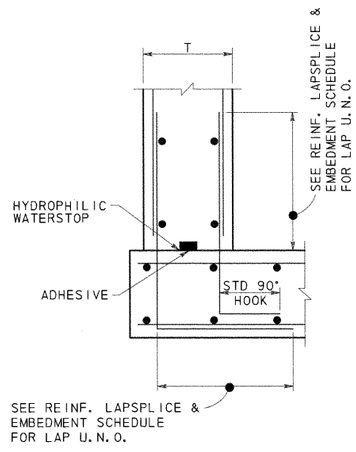

CONSTRUCTION JOINT
BASE OF WALLS

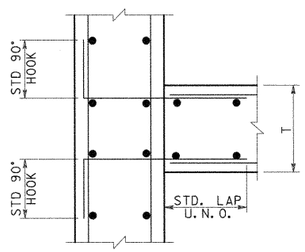

CONSTRUCTION JOINT
WALL INTERSECTIONS

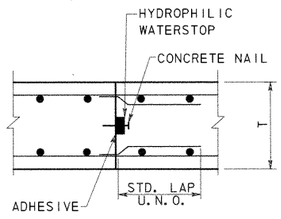

CONSTRUCTION JOINT
SLABS

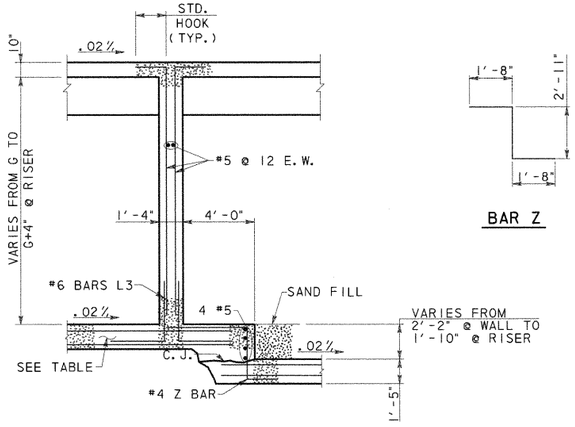

SECTION B

BAR Z

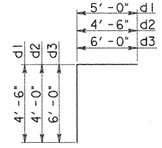

BARS D

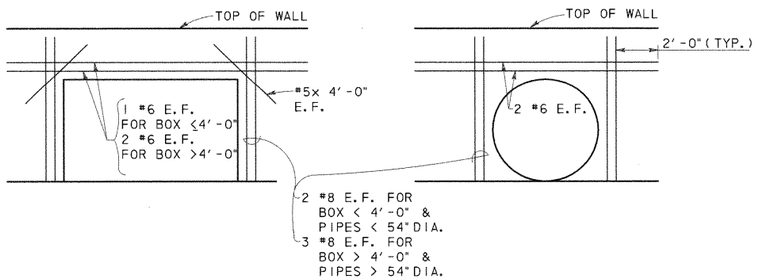

ADDITIONAL REINFORCING @ OPENINGS



NO.	DATE	REVISION	APPROVED

Turner Collie & Braden Inc.
Engineers • Planners • Project Managers

DATE: SUTTON | JOB NO. 62-14004-011 | APPROVED

© 1998 Texas Department of Transportation

US 183
WATER QUALITY PONDS
STRUCTURAL DETAILS

SCALE: AS NOTED | SHEET 4 OF 11

DESIGNED	CHECKED	DRAWN	CHECKED	FED. RD. DIV. NO.	STATE DIST. NO.	STATE	COUNTY	FEDERAL AID PROJECT NO. CONTROL NO.	SECTION NO.	JOB NO.	SHEET NO.	HIGHWAY NO.
WRB		MR		6	14	TEXAS	WILLIAMSON	NH99(556) 151	5	072	261d	US 183

UGPDT4.DGN

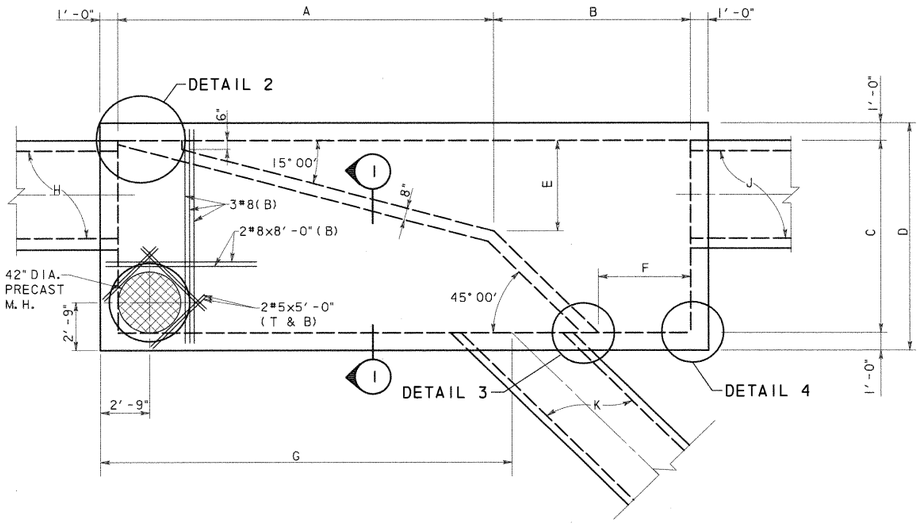

SPLITTER BOX DIMENSION TABLE

BOX LOCATION	A	B	C	D	E	F	G	H	J	K
POND SPRINGS	21'-0"	11'-0"	11'-0"	13'-0"	5'-2"	5'-2"	22'-0"	6x5 RCB	6x5 RCB	4x4 RCB
620 LEFT SIDE	13'-9"	8'-9"	8'-0"	10'-0"	3'-2"	4'-1"	13'-7"	*48" RCP	4x4 RCB	48" RCP

*48" RCP @ 15° SKEW
SEE DRAINAGE DETAIL SHEET.

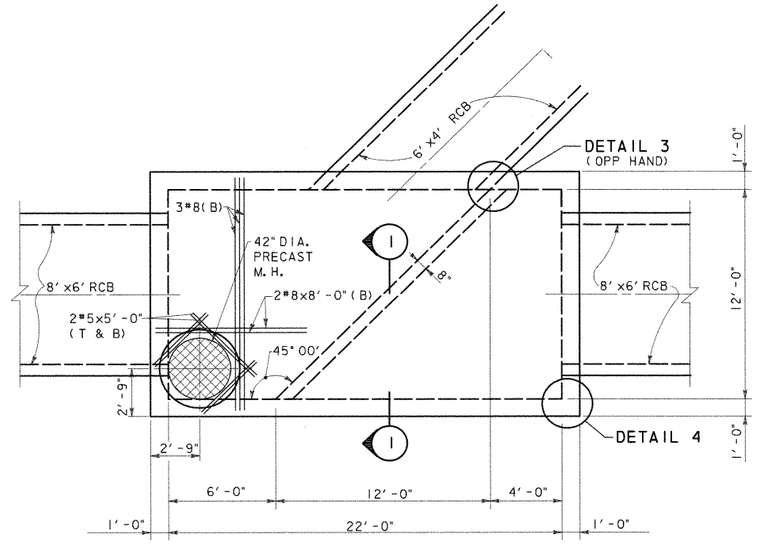

620 RIGHT SIDE
PLAN VIEW
SCALE: 1/4" = 1'-0"

ESTIMATED QUANTITIES			
BOX	CONCRETE (YD^3) *	REINFORCING (LBS) *	STRUCTURAL EXCAVATION (YD)
POND SPRINGS	56.8	7,964	
620 LEFT	32.5	4,096	
620 RIGHT	48.8	5,877	

* QUANTITIES FOR CONTRACTOR'S ESTIMATE ONLY. ALL ITEMS ARE SUBSIDIARY TO THE SPLITTER BOX.

PLAN VIEW
SCALE: 1/4" = 1'-0"

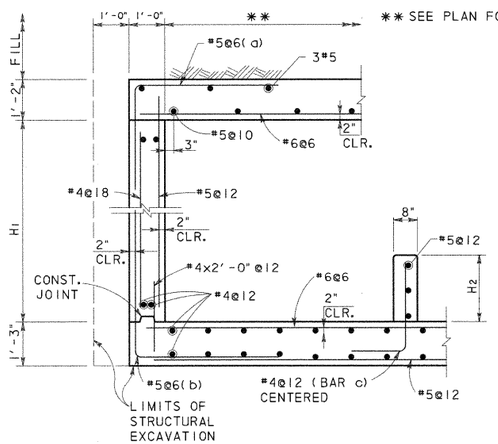

SECTION 1
SCALE: 1/2" = 1'-0"

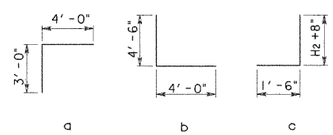

BOX LOCATION	H1	H2
POND SPRINGS	5'-6"	3'-0 1/2"
620 LEFT SIDE	4'-6"	2'-6"
620 RIGHT SIDE	6'-8"	1'-3"

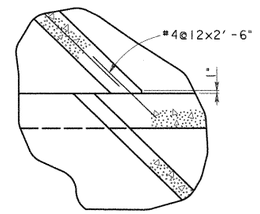

DETAIL 3
SCALE: 1/2" = 1'-0"

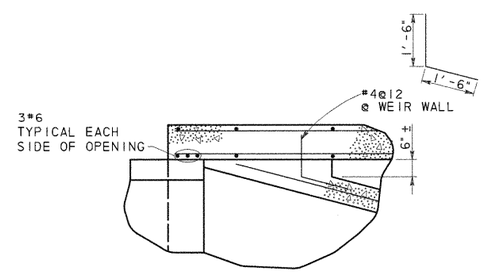

DETAIL 2
SCALE: 1/2" = 1'-0"

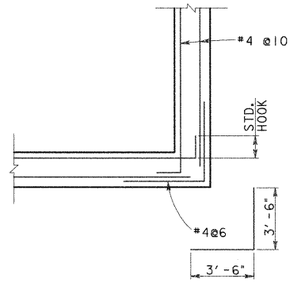

DETAIL 4
SCALE: 1/2" = 1'-0"

GENERAL NOTES:

1. DESIGNED ACCORDING TO CURRENT AASHTO 1996 STANDARD SPECIFICATIONS.
2. DESIGNED FOR HS20 LOADING AND TO THE MAXIMUM FILL HEIGHT SHOWN.
3. ALL REINFORCING SHALL BE GRADE 60 KSI.
4. ALL CONCRETE SHALL BE CLASS "C".
5. ALL DIMENSIONS ARE IN FEET AND INCHES AND ALL MASS IS IN POUNDS UNLESS OTHERWISE NOTED.



NO.	DATE	REVISION	APPROVED

Turner Collie & Braden Inc.
Engineers • Planners • Project Managers

DATE: SUTTON | JOB NO. 62-14004-011 | APPROVED

© 1998 Texas Department of Transportation

US 183
WATER QUALITY PONDS
STRUCTURAL DETAILS

SCALE: AS NOTED | SHEET 6 OF 11

Designed	WRB	FED. RD. DIV. NO.	STATE	FEDERAL AID PROJECT NO.				HIGHWAY NO.
Checked		6	TEXAS	NH99(556)				US 183
Drawn	MR	STATE DIST. NO.	COUNTY	CONTROL NO.	SECTION NO.	JOB NO.		SHEET NO.
Checked		14	WILLIAMSON	151	5	072		261f

UGPDT6.DGN

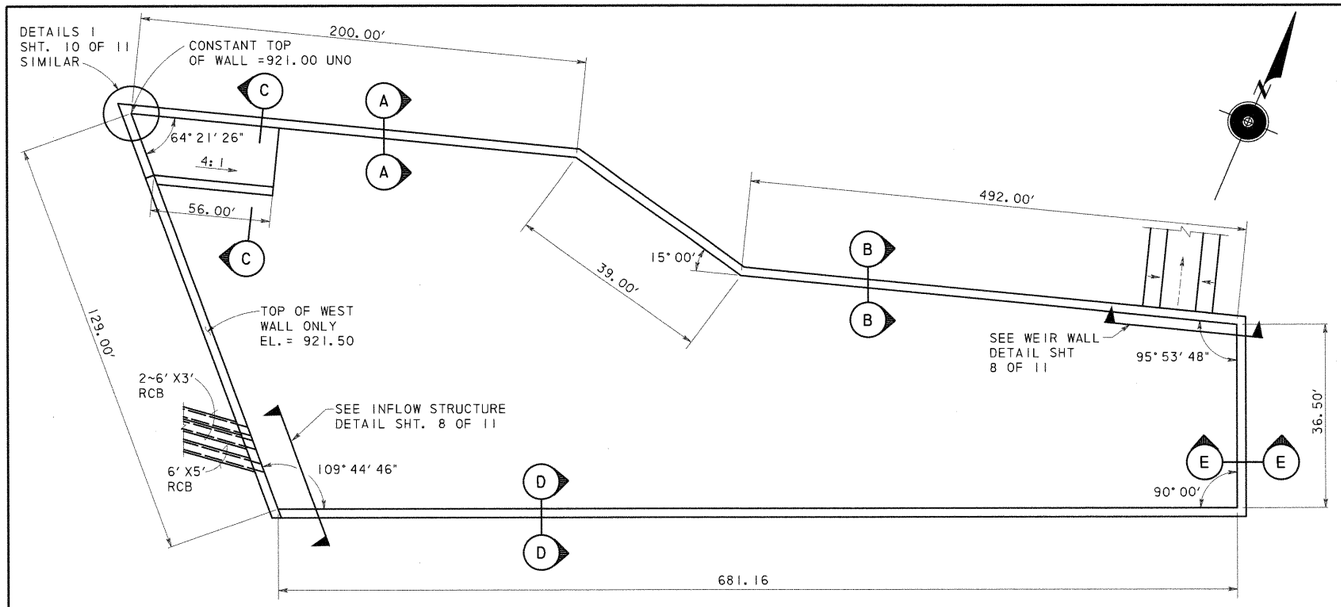

SYSTEM 3 DETENTION POND PLAN

ESTIMATED QUANTITIES (SECTION A)		
CONCRETE (YD^3) *	REINFORCING (LBS) *	** SQ. FT.
2,626	771,900	24,431

* QUANTITIES FOR CONTRACTOR'S ESTIMATE ONLY.

** EXPOSED FACE

*** WALL REINFORCING FOR 32' PANEL (SECT. A)									
A1 ~ 26 #5 @ 15" c-c		A2 ~ 25 #6 @ 15" c-c		A3 ~ 25 #7 @ 15" c-c		A4 ~ 26 #9 @ 15" c-c		A5 ~ 25 #9 @ 15" c-c	
Lgth	lb	Lgth	lb	Lgth	lb	Lgth	lb	Lgth	lb
129	292	145	455	218	928	188	1384	118	837

*** ONE SIDE SHOWN, BARS A BOTH SIDES

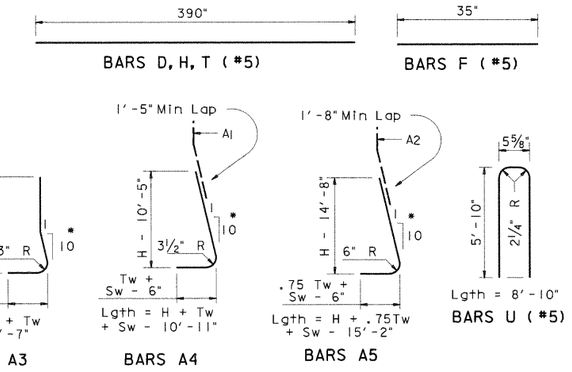

* A BARS ARE STRAIGHT IN FRONT FACE.

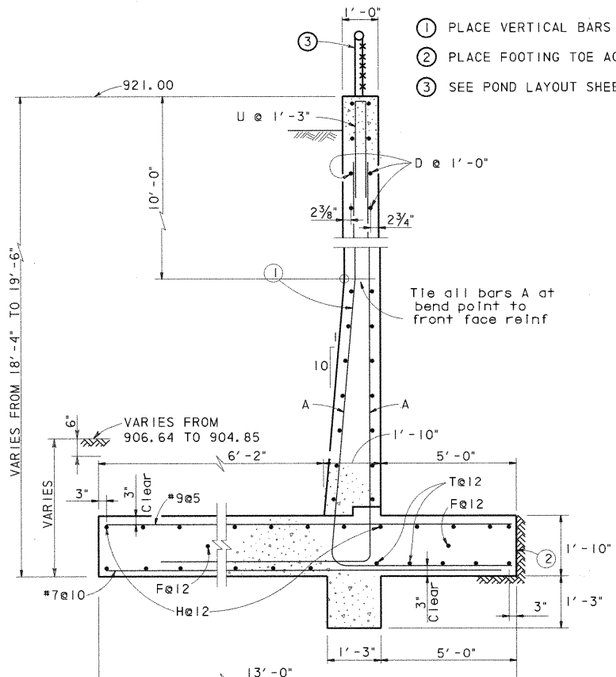

SECTION A-A
SCALE: ½" = 1'-0"

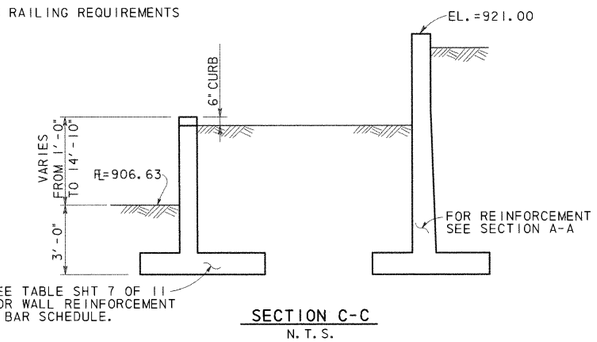

SECTION C-C
N.T.S.

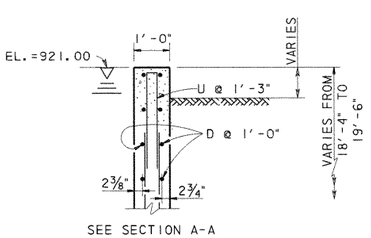

SEE SECTION A-A FOR REST OF DETAIL

SECTION D-D
SCALE: ½" = 1'-0"

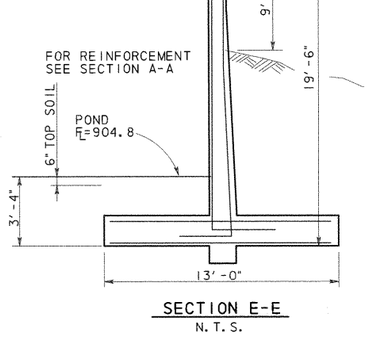

SECTION E-E
N.T.S.

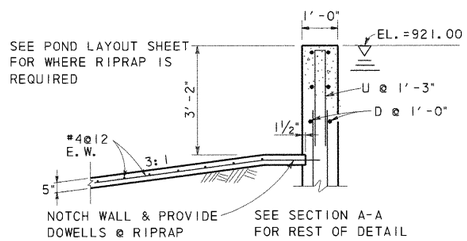

SECTION B-B
SCALE: ½" = 1'-0"

ELEVATION

GENERAL NOTES:

1. DESIGNED ACCORDING TO CURRENT AASHTO 1996 STANDARD SPECIFICATIONS.
2. DESIGNED FOR HS20 LOADING AND EQUIVALENT SOIL PRESSURE OF 60 PCF.
3. ALL REINFORCING SHALL BE GRADE 60 KSI.
4. ALL CONCRETE SHALL BE CLASS "A".
5. REINFORCING BARS SHALL BE ADJUSTED TO PROVIDE A MINIMUM OF 1½" CLEAR COVER.
6. ALL DIMENSIONS ARE IN FEET AND INCHES AND ALL MASS IS IN POUNDS UNLESS OTHERWISE NOTED.
7. CONSTRUCTION JOINT SHALL BE AT 32 FT. MAX. OC. PROVIDE CONSTRUCTION AT 15' MAX FROM EACH CORNER. CORNER CLOSURES SHALL BE PLACED LAST.
8. PROVIDE AN EXPANSION JOINT AFTER MAXIMUM OF 3 PANELS.
9. SEE SHEET 11 OF 11 FOR CONSTRUCTION AND EXPANSION JOINT DETAILS.

STATE OF TEXAS
WALLY R. BURNS
44162
REGISTERED PROFESSIONAL ENGINEER
4/28/99

NO.	DATE	REVISION	APPROVED

Turner Collie & Braden Inc.
Engineers • Planners • Project Managers

SUTTON | Job No. 62-14004-011 | Approved

© 1998 Texas Department of Transportation

US 183
WATER QUALITY PONDS
STRUCTURAL DETAILS

SCALE: AS NOTED | SHEET 7 OF 11

Designed	Checked	Drawn	Checked	FED. RD. DIV. NO.	STATE DIST. NO.	STATE	COUNTY	CONTROL NO.	SECTION NO.	JOB NO.	HIGHWAY NO. / SHEET NO.
WRB		MR		6	14	TEXAS	WILLIAMSON	151	5	072	US 183 / 261g

FEDERAL AID PROJECT NO. NH99(556)

UGPDT7.DGN

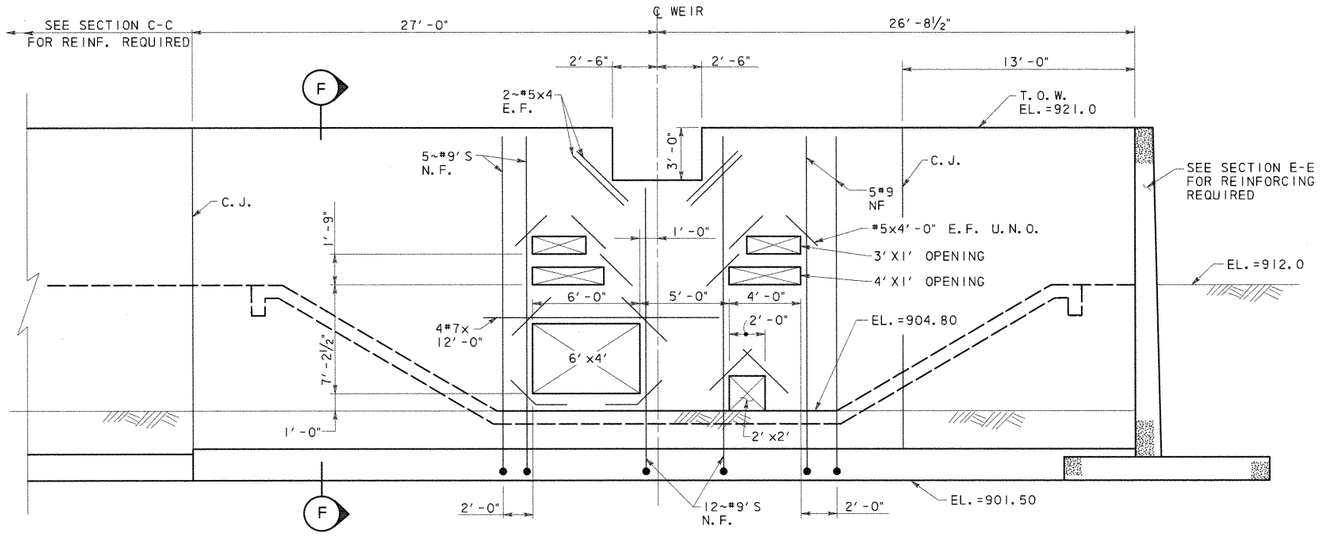

ADDITIONAL REINFORCING SHOWN, SEE SECTION F FOR TYPICAL REINF.

WEIR WALL DETAIL

SCALE: ¼" = 1'-0"

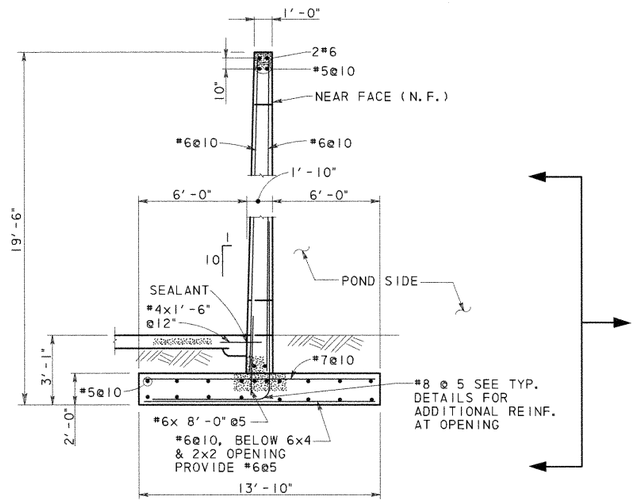

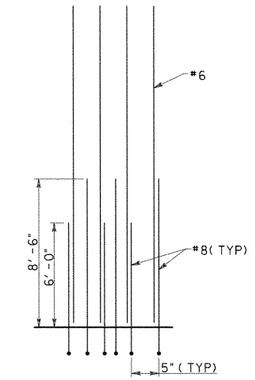

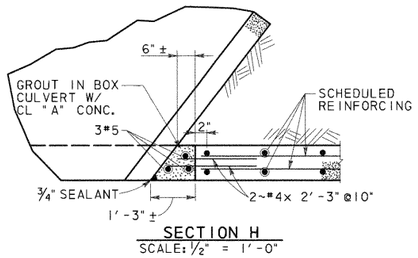

SECTION H

SCALE: ½" = 1'-0"

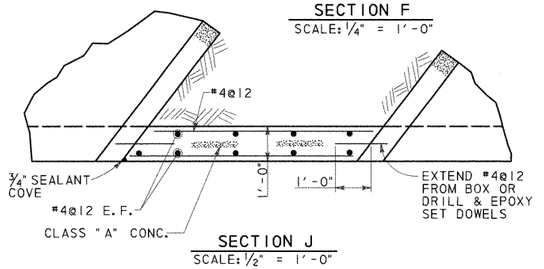

SECTION J

SCALE: ½" = 1'-0"

SECTION F

SCALE: ¼" = 1'-0"

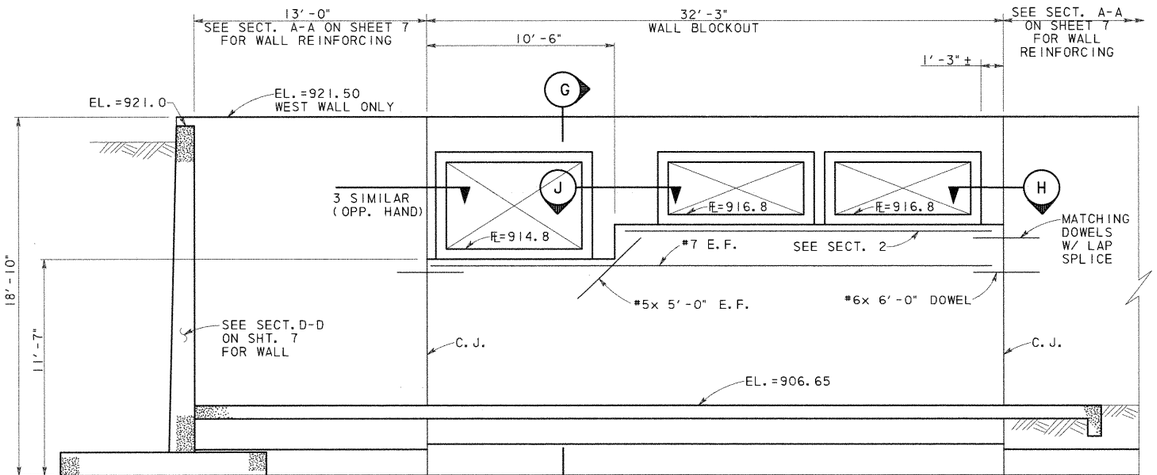

INFLOW STRUCTURE DETAIL

SCALE: ¼" = 1'-0"

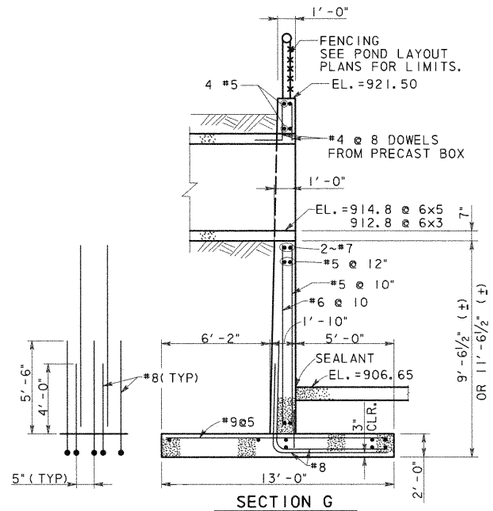

SECTION G

SCALE: ¼" = 1'-0"

STATE OF TEXAS · WALLY R. BURNS · 64262 · REGISTERED PROFESSIONAL ENGINEER

Wally R. Burns 4/28/99

NO.	DATE	REVISION	APPROVED

Turner Collie & Braden Inc.

Engineers • Planners • Project Managers

SUTTON | Job No. 62-14004-011 | Approved

© 1998 Texas Department of Transportation

US 183

WATER QUALITY PONDS STRUCTURAL DETAILS

SCALE: AS NOTED — SHEET 8 OF 11

Designed WRB	Fed. Rd. Div. No. 6	State TEXAS	Federal Aid Project No. NH99(556)	Highway No. US 183
Checked				
Drawn MR	State Dist. No. 14	County WILLIAMSON	Control No. 151	Section No. 5
Checked				Job No. 072

Sheet No. 261h

UGPDT8.DGN

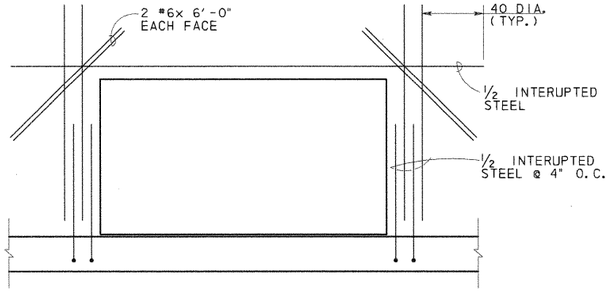

CULVERT OPENINGS

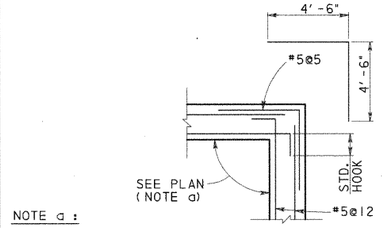

NOTE a :

SEE 620 MEDIAN POND (SHT. 5 OF 11), SYSTEM 3 POND (SHT. 7 OF 11)

DETAIL 1
SCALE: 1/2" = 1'-0"

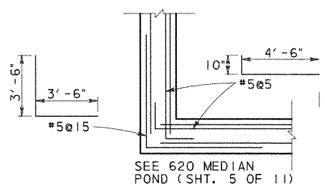

DETAIL 2
SCALE: 1/2" = 1'-0"

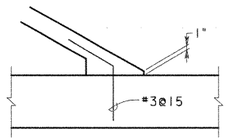

DETAIL 3
SCALE: 3/4" = 1'-0"

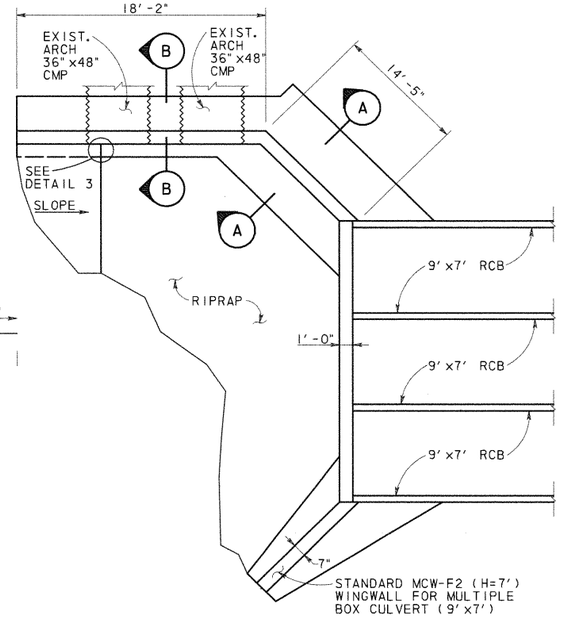

CULVERT @ POND SPRINGS PLAN
N. T. S.

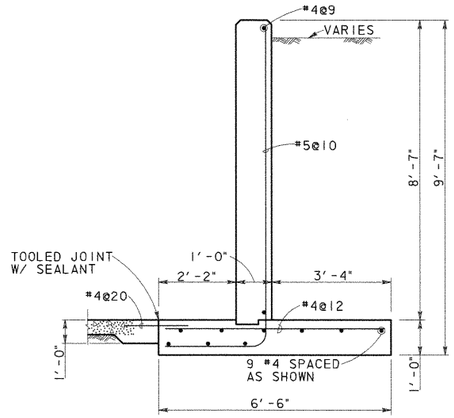

SECTION A-A
SCALE: 1/2" = 1'-0"

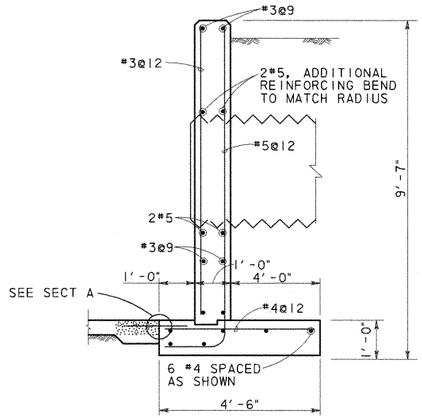

SECTION B-B
SCALE: 1/2" = 1'-0"

POND SPRINGS HEADWALL ESTIMATE QUANTITIES	
CONCRETE (YD^3) *	REINFORCING (LB) *
20.8	672

* QUANTITIES FOR CONTRACTOR'S INFORMATION ONLY. QUANTITIES SHOWN DO NOT INCLUDE THE .5 MCW-F2 WINGWALL OR THE CULVERT CURB.

THE HEADWALL SHALL BE PAID FOR AS MCW-F2(SPL).

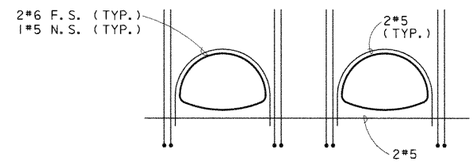

ADDITIONAL REINFORCMENT SHOWN. SEE SECTION B FOR TYPICAL

ELEVATION @ ARCH PIPE
N. T. S.

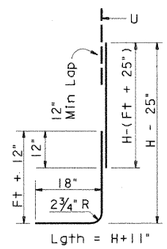

BARS B

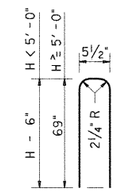

BARS U

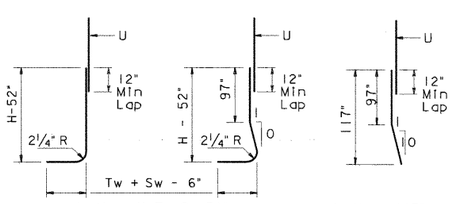

BARS A1

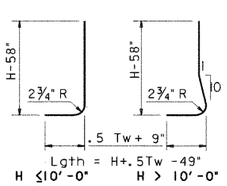

BARS A2

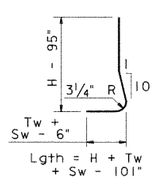

BARS A3

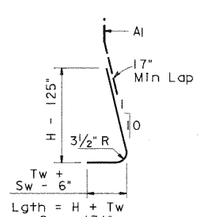

BARS A4

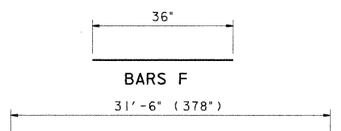

BARS D, H, T

BAR DETAILS POND SPRING

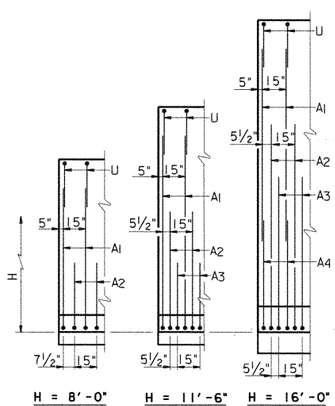

PARTIAL WALL ELEVATIONS
(Showing vertical reinforcing pattern in back face)

STATE OF TEXAS
WILLY R. BURNS
44162
REGISTERED
PROFESSIONAL ENGINEER
6/8/98

NO.	DATE	REVISION	APPROVED

Turner Collie & Braden Inc.
Engineers • Planners • Project Managers

TRANSPORTATION | Job No. 81-07401-024 | Approved

© 1998 Texas Department of Transportation

US 183
MISCELLANEOUS
WATER QUALITY PONDS
STRUCTURAL DETAILS

SCALE: AS NOTED | SHEET 10 OF 11

Designed	WRB	FED. RD. DIV. NO.	STATE	FEDERAL AID PROJECT NO.				HIGHWAY NO.
Checked		6	TEXAS	NH99(556)				US 183
Drawn	MR	STATE DIST. NO.	COUNTY	CONTROL NO.	SECTION NO.	JOB NO.		SHEET NO.
Checked		14	WILLIAMSON	151	5	072		261J

UGPDT10.DGN

AF 41904A

Ultimate Drainage Areas North of R.M. 620 Were Used In Storm Sewer And Water Quality Pond Design

R.M. 620

PECAN PARK

LAKE CREEK PARKWAY

HYMEADOW

Q50 = 447.4 cfs
Outfall 1

Pond 1A

Pond 1B

Pond 1C

Outfall 2
Q100 = 412 cfs
Q50 = 385 cfs

Pond 2A

Pond 2B

Pond 2C

Pond 2D1

Pond 2D2

R.M. 620 Median Pond

Q50 = 800 cfs

Q50 = 89.2 cfs

To Drainage Structures (By Others)

MELLOW MEADOWS DRIVE

LAKESTOP BLVD.

Interim Drainage Areas

US 183

R.M. 620

ANDERSON MILL ROAD

CONTRIBUTING AREA TO LAKE CREEK CHANNEL

A_{TOTAL} = 1133 ACRES
Q_{50} = 4100 cfs *
Q_{100} = 4400 cfs *

* THESE FLOWS ARE BASED ON REGIONAL ANALYSIS OF THE ENTIRE CONTRIBUTING AREA AND DO NOT EQUATE TO THE ACCUMULATED THYSYS FLOWS.

Q50 = 200 cfs

NO.	DATE	REVISION	APPROV.
4			
3			
2			
1			

Turner Collie & Braden Inc.
CONSULTING ENGINEERS
TEXAS AUSTIN/DALLAS/HOUSTON/PORT ARTHUR
COLORADO DENVER

Unit: AUSTIN | Job No. 72-07401-022 | Approved

STATE DEPARTMENT OF HIGHWAYS AND PUBLIC TRANSPORTATION

©1998 TxDOT

DRAINAGE AREA MAP

SCALE: 1" = 200'

Designed DAN	FED. NO. DIV. NO.	STATE	FEDERAL AID PROJECT NO.			HIGHWAY NO.
Checked	6	TEXAS	NH 99(556)			U.S. 183
Drawn WWS	STATE DIST. NO.	COUNTY	CONTROL NO.	SECTION NO.	JOB NO.	SHEET NO.
Checked DAN	14	WILLIAMSON	151	05	072	262a

STATE OF TEXAS
Robert W. Barnett
49537
REGISTERED PROFESSIONAL ENGINEER

Robert W. Barnett
5-09-88

A.F. 61904A

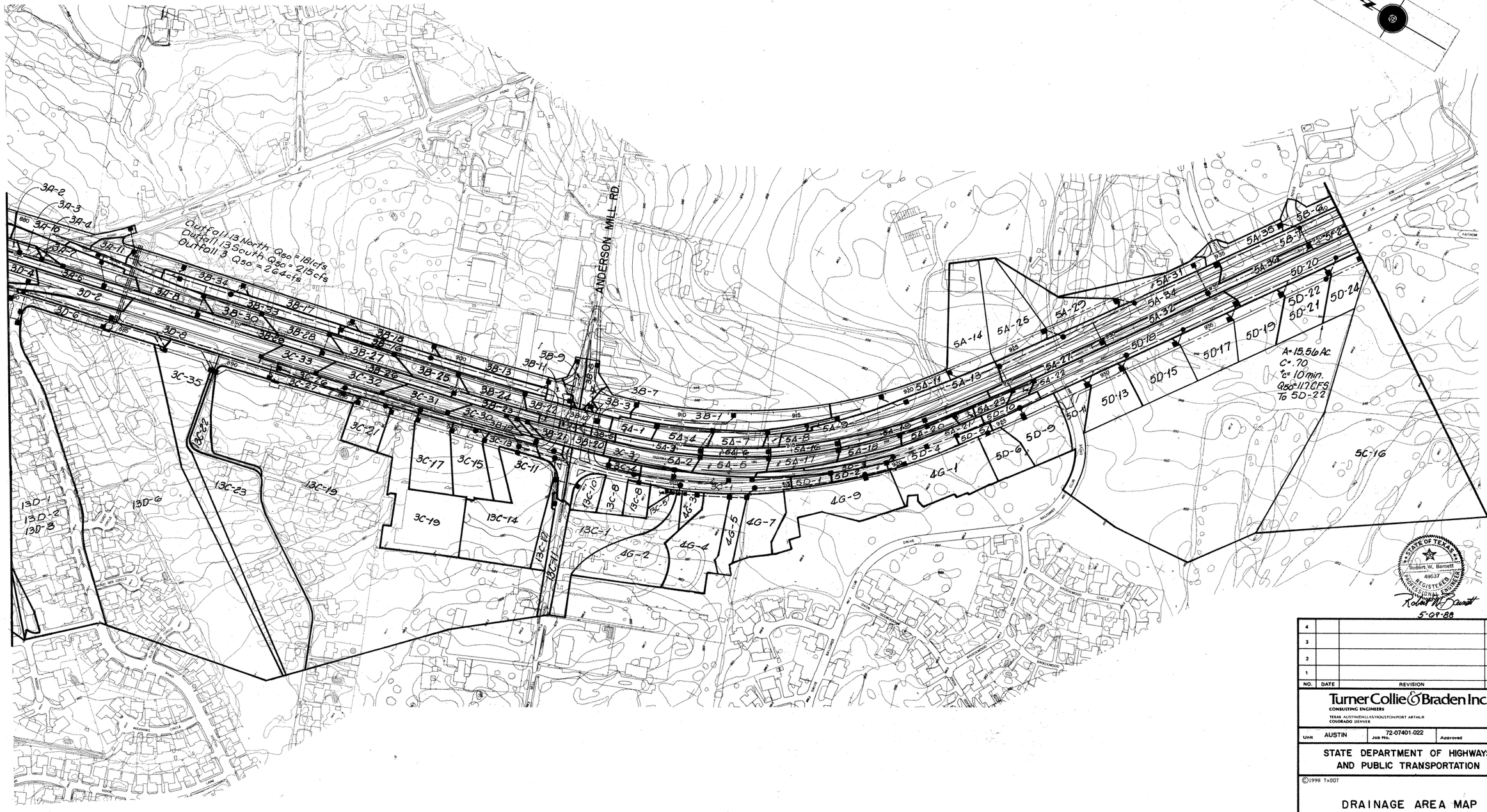

NO.	DATE	REVISION	APPROV.
4			
3			
2			
1			

Turner Collie & Braden Inc.
CONSULTING ENGINEERS
TEXAS AUSTIN/DALLAS/HOUSTON/PORT ARTHUR
COLORADO DENVER

Unit AUSTIN | Job No. 72-07401-022 | Approved

STATE DEPARTMENT OF HIGHWAYS AND PUBLIC TRANSPORTATION

©1998 TxDOT

DRAINAGE AREA MAP

SCALE: 1"=200'

Designed DAN	FED. RD. DIV. NO.	STATE	FEDERAL AID PROJECT NO.			HIGHWAY NO.
Checked	6	TEXAS	NH 99(556)			U.S. 183
Drawn WWS	STATE DIST. NO.	COUNTY	CONTROL NO.	SECTION NO.	JOB NO.	SHEET NO.
Checked DAN	14	WILLIAMSON	151	05	072	202b

A.F. 41804A

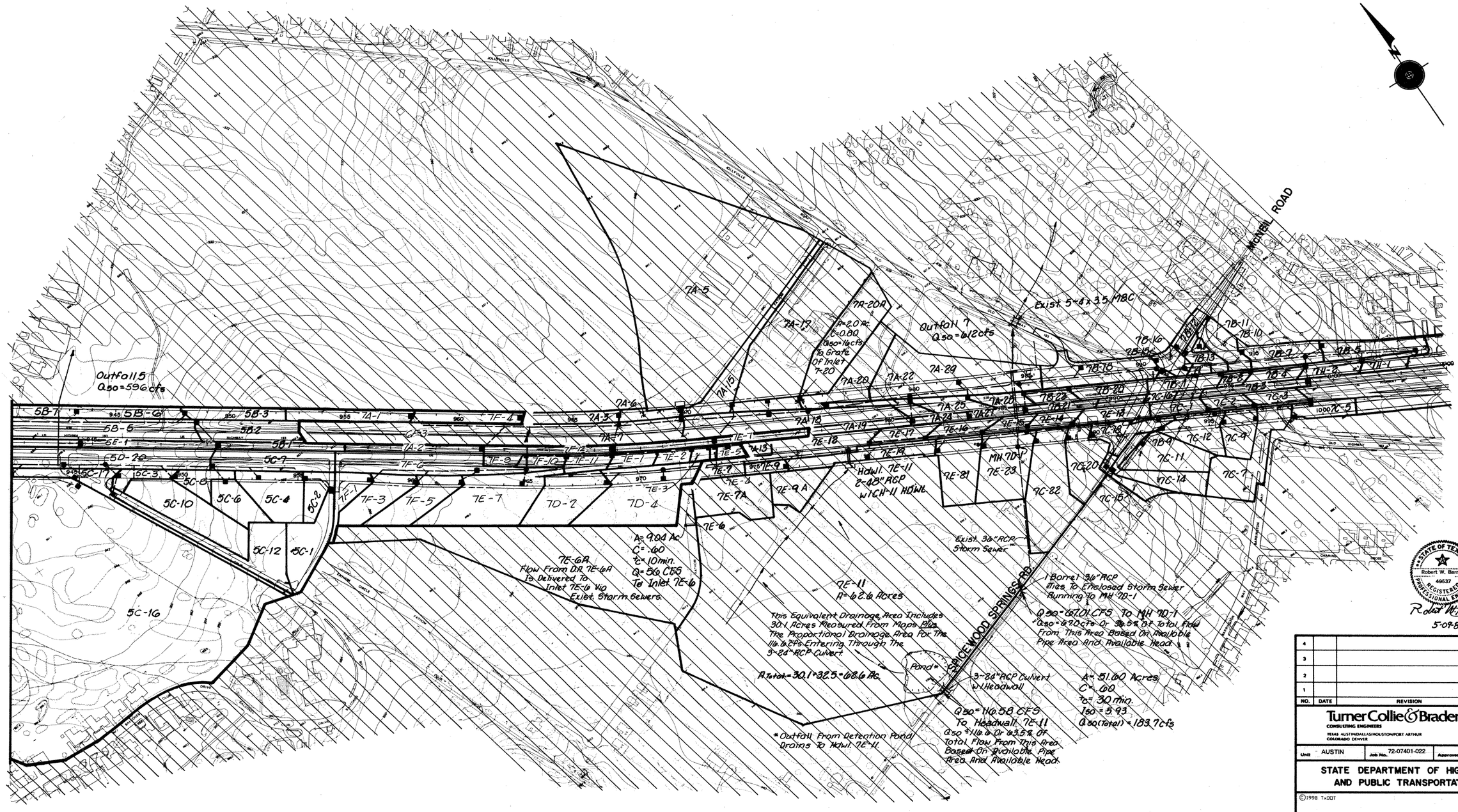
MICHEL ROAD
Outfall 5
Q50=596cfs
Outfall 7
Q50=612cfs
Exist 5-8'x3.5' MBC
7A-5
7A-17
7A-20A
A=2.0 Ac.
C=0.80
Q50=14cfs
To Grate Of Inlet 7-20
7A-15
7A-6
7A-3
7A-7
7A-18
7A-19
7A-20
7A-22
7A-29
7A-25
7A-24
7A-27
7A-26
7A-1
7A-2
7A-13
7F-4
7F-12
7F-11
7F-10
7F-9
7F-8
7F-6
7F-5
7F-3
7F-2
7F-1
7E-1
7E-2
7E-5
7E-7
7E-8
7E-9
7E-9A
7E-9A
7E-6
7E-3
7E-4
7E-7A
7E-10
7E-12
7E-13
7E-14
7E-15
7E-16
7E-17
7E-18
7E-19
7E-11
7E-81
7E-82
7E-23
MH 7D-1
7D-2
7D-4
HDWL 7E-11
2-48" RCP
W/CH-11 HDWL
5B-7
5B-6
5B-5
5B-3
5B-2
5B-1
5E-1
5D-20
5C-17
5C-7
5C-3
5C-8
5C-10
5C-6
5C-4
5C-2
5C-12
5C-1
5C-16
7B-11
7B-10
7B-16
7B-15
7B-13
7B-12
7B-14
7B-18
7B-17
7B-1
7B-2
7B-3
7B-4
7B-5
7B-6
7B-7
7B-8
7B-9
7B-21
7B-22
7B-23
7C-16
7C-1
7C-2
7C-3
1000 7C-5
7C-18
7C-19
7C-20
7C-12
7C-4
7C-11
7C-14
7C-7
7C-82
7C-15
7D-9
7D-11
7D-12
7D-13
7D-14
7D-15
7D-16
7D-17
7D-18
7D-19
7D-20
7D-21
7D-22
7D-23
7D-24
7D-25
7D-26
7D-27
7D-28
7D-29
7D-30
7D-31
7D-32
7D-33
7D-34
7D-35
7D-36
7D-37
7D-38
7D-39
7D-40
7D-41
7D-42
7D-43
7D-44
7D-45
7D-46
7D-47
7D-48
7D-49
7D-50

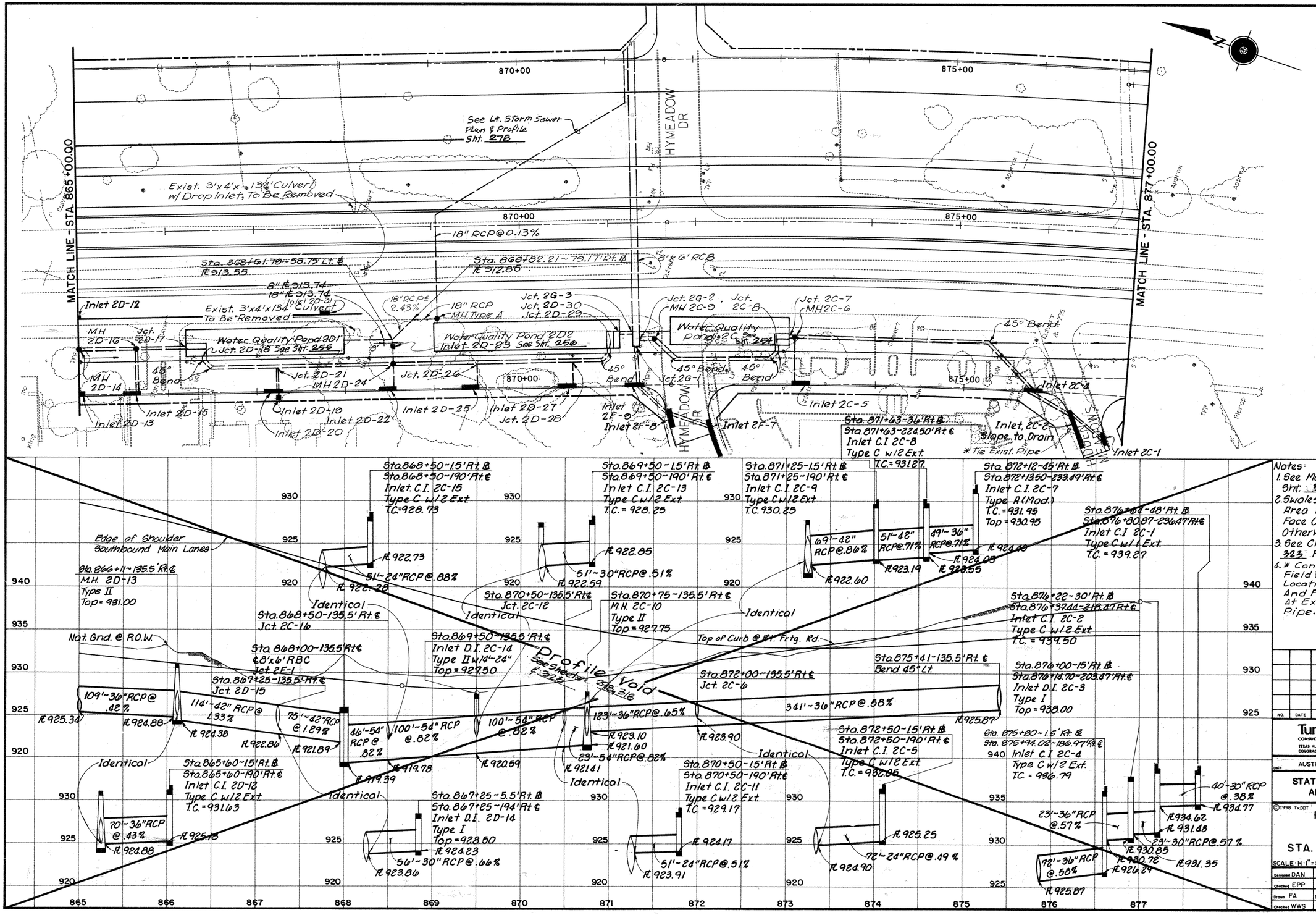

Notes:

1. See Main Lane Storm Sewer Profiles Sht: 316 For Main Lane Drainage.
2. Swales And Inlets In Separation Area Will Typically Be 6' Behind Face Of Curb Unless Dimensioned Otherwise.
3. See Cross Culvert Profiles Sht. 323 For Additional Information.
4. * Contractor Shall Field Verify Pipe Location, Size And Flow Line At Existing Pipe.

STATE OF TEXAS — Robert W. Barnett — 49537 — REGISTERED — PROFESSIONAL ENGINEER

Robert W. Barnett
5-09-88

NO.	DATE	REVISION	APPROVED

Turner Collie & Braden Inc.
CONSULTING ENGINEERS
TEXAS AUSTIN/DALLAS/HOUSTON/PORT ARTHUR
COLORADO DENVER

Unit	Job No.	Approved
AUSTIN	72-07401-022	

STATE DEPARTMENT OF HIGHWAYS AND PUBLIC TRANSPORTATION

©1998 TxDOT

RIGHT STORM SEWER PLAN & PROFILE STA. 865+00 TO STA. 877+00

SCALE: H:1"=50' V:1"=5'

Designed	Fed. Rd. Div. No.	State	Federal Aid Project No.	Highway No.
DAN	6	TEXAS	NH 99(556)	U.S. 183
Checked EPP				
Drawn FA	State Dist. No.	County	Control No. / Section No. / Job No.	Sheet No.
Checked WWS	14	WILLIAMSON	151 / 05 / 072	297

EDGE OF SHOULDER SOUTHBOUND MAIN LANES.

STA. 865+65.75 – 53' LT. BL.
STA. 865+65.75 135.5'RT.CL.
MH 2D-16
TYPE A
TOP 933.0

STA. 865+00 – 53' LT. BL.
STA. 865+00 – 135.5' RT. CL
MH 2D-14
TYPE A
TOP = 932.8

STA. 866+48.58 – 30.5' LT. BL.
STA. 866+48.58 – 158' R. CL.
45° BEND

STA. 866+43.33 – 43.75' LT. BL.
STA. 866+43.33 – 144.75' RT. CL
BEGIN 48" RCP.
JCT. 2D-18
END SPLITTER BOX

STA. 866+24.75 – 53' LT. BL.
STA. 866+24.75 – 135.5' RT. CL.
JCT. 2D-17
END 42" RCP
BEGIN SPLITTER BOX

STA. 867+25 – 30.5' LT. BL.
STA. 867+25 – 158' RT. CL.
JCT. 2D-21

STA. 868+55.75 – 30.5' LT. CL.
STA. 868+55.75 – 158' RT. CL.
MH 2D-24
TYPE A
TOP 928.93

STA. 870+55.75 – 30.5' LT. BL.
STA. 870+55.75 – 158' RT. CL.
JCT. 2D-28

STA. 869+50 – 30.5' LT. BL.
STA. 869+50 – 158' RT. CL.
JCT. 2D-26

STA. 871+25.67 – 62' LT. BL.
STA. 871+25.67 – 126.5' RT. CL
JCT. 2C-3

STA. 871+09 – 62' LT. BL.
STA. 871+09 – 126.5' RT. CL
BEGIN 54" RCP
JCT. 2D-30
END SPLITTER BOX

STA. 870+99.71 – 43.71' LT. BL.
STA. 870+99.71 – 144.79 RT. CL
END 54" RCP
JCT. 2D-29
BEGING SPLITTER BOX

STA. 870+94.50 – 30.5' LT. BL.
STA. 870+94.50 – 158' RT. CL.
45° BEND

STA. 871+33.67 – 53' LT. BL.
STA. 871+33.67 – 135.5' RT. CL.
JCT. 2C-2

STA. 871+49.67 – 53' LT. BL.
STA. 871+49.67 – 135.5' RT. CL.
MH 2C-9
TYPE A
TOP 929.5

STA. 871+72.15 – 30.5 LT. BL.
STA. 871+72.29 – 158' RT. CL.
45° BEND

STA. 872+82.48 – 30.48 LT. BL.
STA. 872+86.37 – 158' RT. CL.
45° BEND

STA. 872+88.76 – 44.75' LT. BL.
STA. 872+92.87 – 143.74' RT. CL
BEGIN 36" RCP
JCT. 2C-8
END SPLITTER BOX

STA. 873+01.33 – 52.98' LT. BL.
STA. 873+05.86 – 135.5' RT. CL
END 36" RCP
JCT. 2C+7
BEGIN SPLITTER BOX

STA. 873+09.26 – 52.98' LT. BL.
STA. 873+14.05 – 135.5' RT. CL
MH 2C-5
TYPE A
TOP 931.0

STA. 875+22.92 – 52.47' LT. BL.
STA. 875+35.01 – 135.5' RT. CL
45° BEND

STA. 875+80 – 1.5' RT. BL.
STA. 875+94.02 – 189.97' RT. CL.
INLET C.I. 2C-4
TYPE II R (20').
T.C. 936.76

STA. 876+27.79 – 41.75' RT. BL.
STA. 876+43.43 – 230.22' RT. CL.
INLET C.I. 2C-2
TYPE II R (40')
T.C. 938.2

STA. 876+63.45 – 48.37' RT. BL.
STA. 876+80.31 – 236.83' RT. CL.
INLET C.I. 2C-1
TYPE II R (10')
T.C. 938.6

NAT. GND. @ R.O.W.

TOP OF CURB @ RIGHT FRONTAGE ROAD.

60'–36" RCP @ 1.00%
FL 925.17
FL 924.51
FL 921.53

56' – 42" RCP @ 0.68%
FL 921.13
FL 920.63
SPLITTER BOX

92' – 48" RCP @ 0.56%
FL 920.53
FL 921.51
FL 920.01

128' – 48" RCP @ 0.56%
FL 919.28
FL 918.78

90' – 54" RCP @ 0.76%
FL 920.57
FL 918.07

106' – 54" RCP @ 0.76%
FL 920.26
FL 917.26

54' – 54" RCP @ 0.76%
FL 916.85
FL 916.71

17' – 54" RCP @ 0.76%
FL 916.58

8'x 6' RCB
FL 916.13 (@ STA. 871+33.67 CL)
FL 916.09 (@ STA. 871+25.67 CL)

157' – 36" RCP @ 0.61%
FL 923.82
SPLITTER BOX
FL 922.84

6' – 36" RCP @ 0.63%
FL 923.90
FL 918.89

14' – 36" RCP @ 0.63%
FL 923.95
FL 918.79

213' – 36" RCP @ 0.60%
FL 924.51

73' – 36" RCP @ 0.60%
FL 925.81
FL 926.26

44' – 18" RCP @ 1.25%
FL 934.10
FL 933.50

52' – 36" RCP @ 0.57%
FL 931.30
FL 930.98

12" WL
FL 926.7

INDENTICAL

STA. 865+60 – 1.5' RT. BL.
STA. 865+60 – 190' RT. CL.
INLET C.I. 2D-15
TYPE II R (20')
T.C. 931.63

STA. 867+19.25 – 1.5' RT. BL.
STA. 867+19.25 – 190' RT. CL.
INLET C.I. 2D-20
TYPE II R (20')
T.C. 930.00

STA. 867+25 – 5.5' RT. BL.
STA. 867+25 – 194' RT. CL.
INLET D.I. 2D-19
TYPE I
TOP = 928.50

STA. 869+44.25 – 1.5' RT. BL.
STA. 869+44.25 – 190' RT. CL.
INLET C.I. 2D-25
TYPE II R (20')
T.C. 928.20

STA. 873+09.26 – 27.4' LT. BL.
MH 2C-6

STA. 873+15 – 1.5' RT. BL.
STA. 873+20 – 189.98' RT. CL.
INLET C.I. 2C-5
TYPE II R (20')
T.C. 932.95

STA. 871+29.67 – 143.5' RT. CL.
JCT. 2G-1
SEE SHEET ___ FOR TIE INTO 6'X6' RCB.

STA. 871+25 – 1.5' RT. BL.
STA. 871+25 – 190' RT. CL.
INLET C.I. 2F-9
TYPE II R (20')
T.C. 930.21

STA. 871+65.08 – 38.52' RT. BL.
STA. 871+65.08 – 227.02' RT. CL.
INLET C.I. 2F-8
TYPE II R (30')
T.C. 931.5

STA. 872+16.85 – 62.34' RT. BL.
STA. 872+18.53 – 250.83' RT. CL.
INLET C.I. 2F-7
TYPE II R (40')
T.C. 932.2

FL 925.01
FL 925.23
48' – 24" RCP @ 0.42%
FL 921.53

FL 924.00
FL 924.23
FL 924.20
2^30" RCP @ 0.60%
FL 921.51
12" WL
FL 920.8
29' – 30" RCP @ 8.03%

STA. 868+50 – 1.5' RT. BL.
STA. 868+50 – 190' RT. CL.
INLET C.I. 2D-22
TYPE II R (20')
T.C. 928.73

STA. 868+55.75 – 138.5' RT. CL.
INLET D.I. 2D-23
TYPE I
TOP 927.5

16' – 24" RCP @ 1.40%
FL 922.25
FL 921.97

26' – 18" RCP @ 0.84%
FL 922.73
FL 922.47

FL 921.70
29' – 24" RCP @ 3.65%
FL 920.57

STA. 870+55.75 – 30' LT. BL.
JCT. 2D-28

STA. 870+50 – 1.5' RT. BL.
STA. 870+50 – 190' RT. CL.
INLET C.I. 2D-27
TYPE II R (20')
T.C. 929.17

FL 923.17
29' – 18" RCP @ 9.39%
FL 920.26
FL 917.26

51' – 24" RCP @ 0.83%
FL 925.45
FL 925.01

8'x 6' RCB
FL 916.16

44' – 36" RCP @ 0.72%
FL 924.40
FL 924.06

45' – 42" RCP @ 0.71%
FL 923.55
12" WL
FL 920.2

43' – 42" RCP @ 6.51%
FL 923.20
FL 921.21
FL 918.28

STA. 865+00 TO 877+00
FOR PLAN SEE SHEET 297

865 866 867 868 869 870 871 872 873 874 875 876 877

DATE: 04-01-99
JOB No.: 72-07401-022
PATH: K:\ 07401022\drainage\pro865r.dgn

STATE OF TEXAS
REBECCA A BILLS
82587
REGISTERED PROFESSIONAL ENGINEER
Rebecca A. Bills
5-3-99

Turner Collie & Braden Inc.
ENGINEERS • PLANNERS • PROJECT MANAGERS

AUSTIN | Job No. 72-07401-022 | File

Texas Department of Transportation

©1998 TxDOT

US 183
RIGHT STORM SEWER
PROFILES

SCALE: H:1"=50', V:1"=5'

Designed	KKY	FED. RD. DIV. NO.	STATE	FEDERAL AID PROJECT NO.					HIGHWAY NO.
Checked	DLG	6	TEXAS	NH 99(556)					U.S.183
Drawn	JAM	STATE DIST. NO.	COUNTY	CONTROL NO.	SECTION NO.	JOB NO.			SHEET NO.
Checked	DLG	14	WILLIAMSON	0151	05	072			298

	ITEM 100	ITEM 110	ITEM 110	ITEM 132	ITEM 132	ITEM 160	ITEM 160	ITEM 164	ITEM 164	ITEM 164	ITEM 168	ITEM 169	ITEM 169	ITEM 247	ITEM 310	ITEM 400	ITEM 400	ITEM 402	ITEM 421	ITEM 423	ITEM 432	ITEM 450	ITEM 450	ITEM 460	ITEM 462	ITEM 462	ITEM 462
	Prep. R.O.W.	EXCAV (CHANNEL)	EXCAV (POND)	EMBANK (TY B)	EMBANK (DC) (TY C) MOD	Furn & Plac Tpsl (Cl 2) (4in)	Furn & Plac Tpsl (Cl 2) (6in)	Cell Fib Mulch Seed	Drill Seed (Temp) (Warm)	Drill Seed (Perm) (Urban) (Clay)	Vegetative Watering	SOIL RET BLNKT (CL1) (TY A)	SOIL RET BLNKT (CL2)(TY G)	Fl Bs (TyD Gr6 Cl 2) (Comp In Plac)	Apsh Mat (MC-30)	Struct Excav (Sewer)	Struct Excav (Culv Large)	TRENCH EXCAV PROTECT	CL C Conc. (misc.)	Pond Wall (Cast-In-Place)	RIPRAP (CONC.) (CL B)	Rail (TY PR)	Rail (TY C4) (S)	CMP (Gal Stl 12in)	Conc Box Culv (2'x4')	Conc Box Culv (4'x4')	Conc Box Culv (6'x4')
	AC	CY	CY	CY	CY	SY	SY	SY	SY	SY	MG	SY	SY	TONS	GAL	CY	CY	LF	CY	SF	CY	LF	LF	LF	LF	LF	LF
620 Median Pond	–	–	7313	–	892	–	2144	–	1072	2144	54	–	–	–	–	4130	–	2165	81.3	9811	5.1	–	1055	35	–	–	468
LakeCreek Pond 1A	–	–	(2053)	–	–	–	–	–	–	–	–	–	–	–	–	107	–	95	–	–	–	–	–	6	–	–	–
LakeCreek Pond 1B	–	–	(1908)	–	–	–	–	–	–	–	–	–	–	–	–	42	–	54	–	–	–	–	–	6	–	–	–
LakeCreek Pond 1C	–	–	(1657)	–	–	–	–	–	–	–	–	–	–	–	–	7	–	10	–	–	–	–	–	6	–	–	–
Hymeadow Pond 2A	–	–	(3048)	–	–	–	–	–	–	–	–	–	–	–	–	115	–	62	–	–	–	–	–	6	–	–	–
Hymeadow Pond 2B	–	–	(1529)	–	–	–	–	–	–	–	–	–	–	–	–	2	–	7	–	–	–	–	–	6	–	–	–
Hymeadow Pond 2C	–	–	(2260)	–	–	–	–	–	–	–	–	–	–	–	–	50	–	34	–	–	–	–	–	6	–	–	–
Hymeadow Pond 2D1	–	–	(3286)	–	–	–	–	–	–	–	–	–	–	–	–	212	–	124	–	–	–	–	–	6	–	–	–
Hymeadow Pond 2D2	–	–	(4381)	–	–	–	–	–	–	–	–	–	–	–	–	1893	–	735	–	–	–	–	–	6	–	–	–
Pond Springs Pond	1.04	93	5300	–	441	–	5056	–	2420	4840	121	1403	–	45	–	1656	–	336	57.8	5002	78	–	–	13	–	44	–
Pond Springs Detention Pond	1.15	1162	22610	308	–	1459	2780	–	3391	6782	279	363	2186	141	50	2056	756	1135	–	24431	280	120	140	0	–	–	–
Woods Pond	7.1	2640	64420	1202	8970	–	34364	437	18275	36550	859	6500	6500	275	–	2016	–	649	–	–	166.5	–	–	75	152	–	–
TOTAL	9.29	3895	99643	1510	10303	1459	44,344	437	25158	50316	1313	8266	8686	461	50	12286	756	5406	139.1	39244	529.6	120	1195	171	152	44	468

	ITEM 462	ITEM 462	ITEM 462	ITEM 462	ITEM 462	ITEM 462	ITEM 464	ITEM 464	ITEM 464	ITEM 464	ITEM 465	ITEM 465	ITEM 465	ITEM 465	ITEM 466	ITEM 466	ITEM 466	ITEM 466	ITEM 466	ITEM 466	ITEM 466	ITEM 467	ITEM 481	ITEM 481	ITEM 481	ITEM 481	ITEM 529	ITEM 530
	Conc Box Culv (4'x4')	Conc Box Culv (6'x4')	Conc Box Culv (6'x5')	Conc Box Culv (7'x4')	Conc Box Culv (8'x4')	Conc Box Culv (8'x6')	RCP SEW (D-LOAD) (18")	RCP SEW (D-LOAD) (24")	RCP SEW (D-LOAD) (36")	RCP SEW (D-LOAD) (48")	MAN H (COMPL) TY A	INLET (COMPL) (DROP) (TY I)	INLET (COMPL) (DROP) (TY IB)	INLET (COMPL) (DROP) (TY II)	CULV HDWLL TY PW-45	CULV HDWLL TY MCW-P-15 MOD	CULV HDWLL TY MCW-P-30 MOD	CULV HDWLL TY MCW-P-45 MOD	CULV HDWLL TY MCW-F1-30	CULV HDWLL TY FW-N	CULV HDWLL TY FW-45	S.E.T. TYII	* P.V.C. PIPE (SCH 40) 4"	* P.V.C. PIPE (SCH 40) 6"	* P.V.C. PIPE (SCH 40) 8"	* P.V.C. PIPE (SCH 40) 12"	* CONC. CURB (TY II) (6 IN)	CONC. DRVWY
	LF	LF	LF	LF	LF	LF	LF	LF	LF	LF	EA	EA	EA	EA	EA	EA	EA	EA	EA	EA	EA	EA	LF	LF	LF	LF	LF	SY
620 Median Pond	–	468	–	–	–	–	1487	–	–	210	–	–	–	–	–	–	–	–	–	–	–	1	324	–	77	–	–	21
LakeCreek Pond 1A	–	–	–	–	–	–	–	–	–	–	–	–	–	–	–	–	–	–	–	–	–	–	144	25	100	–	–	–
LakeCreek Pond 1B	–	–	–	–	–	–	–	–	–	–	–	–	–	–	–	–	–	–	–	–	–	–	114	24	58	–	–	–
LakeCreek Pond 1C	–	–	–	–	–	–	–	–	–	–	–	–	–	–	–	–	–	–	–	–	–	–	120	25	14	–	–	–
Hymeadow Pond 2A	–	–	–	–	–	–	6	–	–	–	1	–	–	–	–	–	–	–	–	–	–	–	138	25	65	–	–	–
Hymeadow Pond 2B	–	–	–	–	–	–	–	–	–	–	–	–	–	–	–	–	–	–	–	–	–	–	63	25	11	–	–	–
Hymeadow Pond 2C	–	–	–	–	–	–	–	–	–	–	–	–	–	–	–	–	–	–	–	–	–	–	156	25	38	–	–	–
Hymeadow Pond 2D1	–	–	–	–	–	–	70	–	–	–	–	–	–	–	–	–	–	–	–	–	–	–	288	25	54	–	–	–
Hymeadow Pond 2D2	–	–	–	–	–	–	735	–	–	–	1	–	–	–	–	–	–	–	–	–	–	–	252	27	5	–	–	–
Pond Springs Pond	44	–	–	–	–	–	–	–	–	–	–	–	–	–	–	–	–	–	–	–	–	–	704	–	357	–	–	42
Pond Springs Detention Pond	–	–	96	–	81	84	–	136	287	563	2	3	1	3	–	2	2	–	–	1	–	–	–	–	–	–	90	30
Woods Pond	–	–	30	175	333	28	66	–	–	–	–	2	–	–	1	–	–	1	1	–	1	6	–	–	–	75	–	37
TOTAL	44	468	126	175	414	112	2364	136	287	773	4	5	1	3	1	2	2	1	1	1	1	7	2303	201	779	75	90	130

	ITEM 531	ITEM 550	ITEM 550	ITEM 550	ITEM 3116	ITEM 3116	ITEM 3116	ITEM 5014	ITEM 5014	ITEM 5014	ITEM 8608
	CONC. WALKWAY (5 IN)	CHAIN LINK FENCE (6FT)	VEH. GATE (DOUBLE) (12FT)	VEH. GATE (DOUBLE) (20FT)	ASPH CONC (TY C) (SURF) (PV 32 MIN)	ASPH CONC. (TY C) 2"	ASPH CONC. (TY C) 1½"	GABIONS (3'X1') (GALV)	GABIONS (3'X3') (GALV)	GABIONS (6'X0.5') (GALV)	SAND FILTER SYSTEM
	SY	LF	EA	EA	TONS	TONS	TONS	CY	CY	CY	EA
620 Median Pond	–	–	–	2	–	–	–	–	20	6.7	1 (60'X64')
LakeCreek Pond 1A	–	–	–	–	–	–	–	6.6	10	–	1 (29'X30')
LakeCreek Pond 1B	–	–	–	–	–	–	–	6.6	10	–	1 (24'X30')
LakeCreek Pond 1C	–	–	–	–	–	–	–	6.6	10	–	1 (25'X30')
Hymeadow Pond 2A	–	–	–	–	–	–	–	6.6	10	–	1 (28'X30')
Hymeadow Pond 2B	–	–	–	–	–	–	–	6.6	10	–	1 (15'X30')
Hymeadow Pond 2C	–	–	–	–	–	–	–	6.6	10	–	1 (29'X30')
Hymeadow Pond 2D1	–	–	–	–	–	–	–	6.6	10	–	1 (30'X37')
Hymeadow Pond 2D2	–	–	–	–	–	–	–	6.6	10	–	1 (30'X47')
Pond Springs Pond	–	1050	2	–	–	8.3	–	–	38	10.3	1 (40'X93')
Pond Springs Detention Pond	46	2060	1	–	12	4.1	7.7	–	–	–	–
Woods Pond	–	2010	1	–	–	56.2	–	–	–	–	–
TOTAL	46	5120	4	2	12	68.6	7.7	52.8	138	17.0	10

NOTES:

( ) INCIDENTAL. FOR CONTRACTOR'S INFORMATION ONLY.

* SUBSIDIARY TO VARIOUS BID ITEMS.

Turner Collie & Braden Inc.
ENGINEERS • PLANNERS • PROJECT MANAGERS

AUSTIN | Job No. 61-99100-012 | File

©1998 TxDOT

US 183
WATER QUALITY AND DETENTION POND SUMMARY SHEET

SCALE: AS NOTED

Designed	FED. RD. DIV. NO.	STATE	FEDERAL AID PROJECT NO.		HIGHWAY NO.
KKY	6	TEXAS	NH 09(556)		US 183
Drawn	STATE DIST. NO.	COUNTY	CONTROL NO.	SECTION NO.	JOB NO.	SHEET NO.
JAM	AUS	WILLIAMSON	0151	05	072	48
Checked						
DLG						

DATE: 04/10/99
JOB No.: 72-07401-022
PATH: t:\ 07401022\drainage\wqptbl2.dgn

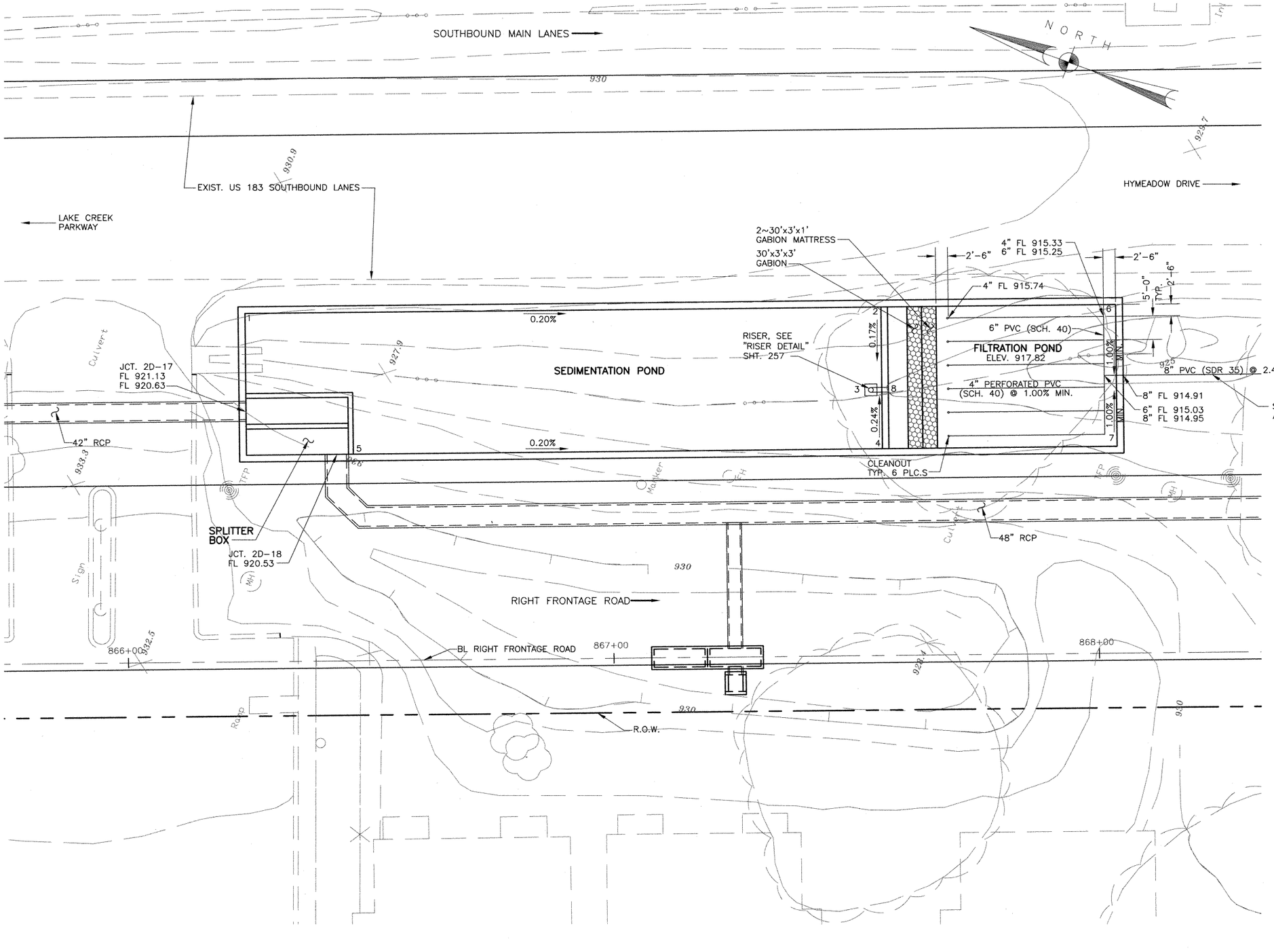

POINT LOCATION TABLE

POINT No.	STATION BL RT. FRT. RD.	OFFSET	ELEV. FL
1	866+24.75	73.75' LT.	918.13
2	867+55.75	73.75' LT.	917.87
3	867+53.50	56.17' LT.	917.84
4	867+55.75	43.75' LT.	917.87
5	866+46.75	43.75' LT.	918.07
6	868+04.08	73.75' LT.	917.82
7	868+04.08	43.75' LT.	917.82
8	867+57.08	56.17' LT.	917.82

NOTE:
FOR CURRENT INFORMATION ABOUT GRAVITY & FORCE MAINS IN REFERENCE TO CHANGE ORDER #10, CONTACT CITY OF AUSTIN WATER & WASTEWATER DEPT

NOTES:

1. SEE WATER QUALITY POND STRUCTURAL DETAILS SHEETS 261a – 261d FOR POND DIMENSIONS AND REINFORCEMENT.
2. SEE STORM SEWER PROFILE SHEETS 298 FOR FLOWLINES OF RCPs/RCBs AT SPLITTER BOX.
3. SEE WATER QUALITY POND TYPICAL SECTIONS AND DETAILS, SHEET 257 FOR FILTRATION POND DETAILS.

STATE OF TEXAS
REBECCA A. BILLS
82587
REGISTERED PROFESSIONAL ENGINEER

Rebecca A. Bills 5-3-99

Turner Collie & Braden Inc.
ENGINEERS • PLANNERS • PROJECT MANAGERS

AUSTIN | Job No. 72-07401-022

Texas Department of Transportation

© 1998 TxDOT

HYMEADOW (2D1) UNDERGROUND WATER QUALITY POND LAYOUT

SCALE: 1"=10'

Designed	RAB	FED. RD. DIV. NO.	STATE	FEDERAL AID PROJECT NO.				HIGHWAY NO.
Checked	CDB	6	TEXAS	NH 99(556)				U.S.183
Drawn	GWS	STATE DIST. NO.	COUNTY	CONTROL NO.	SECTION NO.	JOB NO.		SHEET NO.
Checked	DLG	14	WILLIAMSON	0151	05	072		255

DATE: 04/29/99
JOB NO. 72-07401-022/PONDS/HYMD2D1.dwg

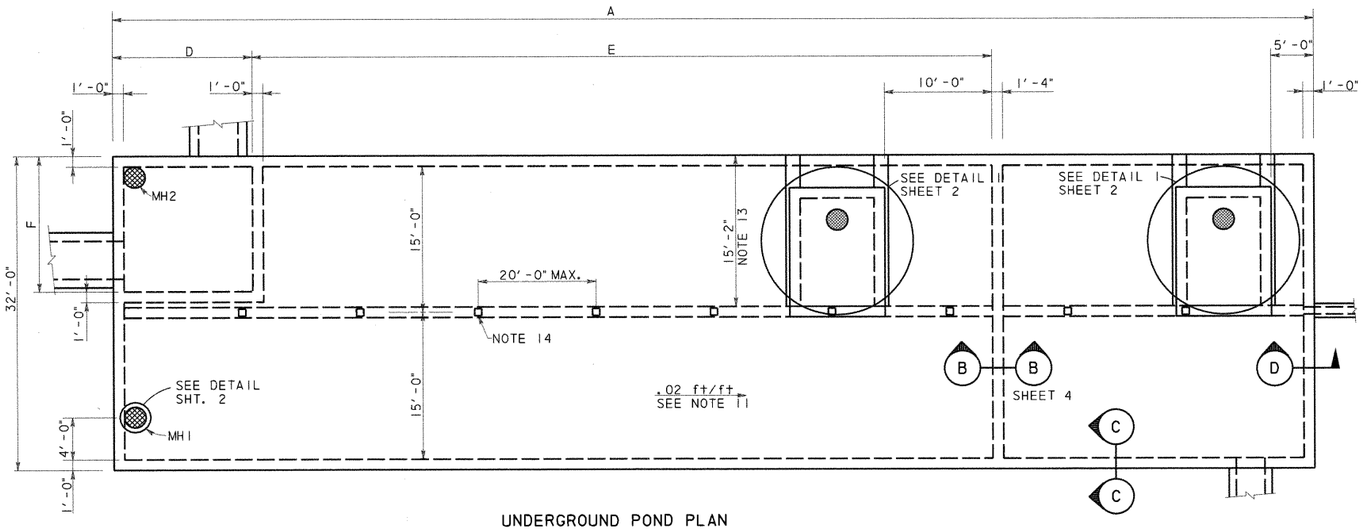

UNDERGROUND POND PLAN

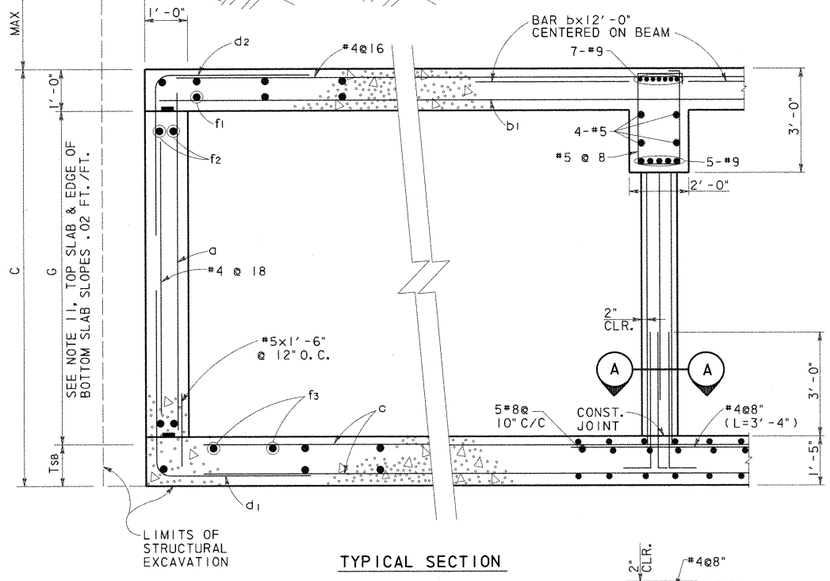

TYPICAL SECTION

SECTION C-C
N. T. S.

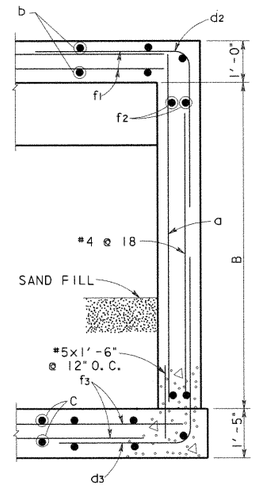

SECTION D-D
N. T. S.

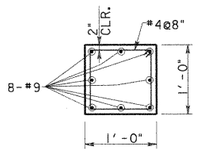

SECTION A-A
SCALE: 1"=1'-0"

UNDERGROUND POND REINFORCING TABLE																		
POND DESIGNATION	BARS a		BARS b		BARS b1		BARS c		BARS d1		BARS d2		BARS d3		BARS f1, f2, f3(#4)			
	SIZE	SPA.	SIZE	SPA.	SIZE	SPA.	SIZE	SPA.	SIZE	SPA.	SIZE	SPA.	SIZE	SPA.	f1 Spa.	f2 Spa.	f3 Spa.	
1A	#6	@12"	#8	@8"	#6	@8"	#8	@10"	#6	@6"	#6	@6"	#6	@6"	@6"	@12"	@7"	
1B	#6	@12"	#8	@8"	#6	@8"	#8	@10"	#6	@6"	#6	@6"	#6	@6"	@6"	@12"	@7"	
1C	#6	@12"	#8	@8"	#6	@8"	#8	@10"	#7	@6"	#6	@6"	#7	@6"	@6"	@12"	@7"	
2A	#6	@12"	#8	@8"	#6	@8"	#8	@10"	#6	@6"	#6	@6"	#6	@6"	@6"	@12"	@7"	
2B	#6	@12"	#8	@8"	#6	@8"	#8	@10"	#6	@6"	#6	@6"	#6	@6"	@6"	@12"	@7"	
2C	#7	@12"	#8	@8"	#6	@8"	#8	@10"	#7	@6"	#6	@6"	#8	@6"	@6"	@12"	@7"	
2D1	#7	@12"	#8	@8"	#6	@8"	#8	@10"	#7	@6"	#6	@6"	#8	@6"	@6"	@12"	@7"	
2D2	#7	@12"	#8	@8"	#6	@8"	#8	@10"	#7	@6"	#6	@6"	#8	@6"	@6"	@12"	@7"	

UNDERGROUND POND DIMENSION TABLE											
POND DESIGNATION	A	B	C	D	E	F	G			MAX FILL	AVERAGE FILL
1A	160'-4"	9'-2"	9'-3"	22'-0"	97'-0"	19'-0"	7'-0"			11'-0"	7'-6"
1B	128'-10"	9'-2"	9'-3"	15'-6"	77'-0"	11'-0"	7'-0"			8'-6"	5'-6"
1C	118'-10"	9'-8"	9'-9"	15'-6"	66'-0"	11'-0"	7'-6"			8'-3"	5'-6"
2A	147'-10"	9'-2"	9'-3"	15'-6"	92'-0"	11'-0"	7'-0"			9'-3"	6'-9"
2B	86'-10"	9'-2"	9'-3"	15'-6"	44'-0"	11'-0"	7'-0"			6'-9"	4'-9"
2C	133'-10"	10'-2"	10'-3"	15'-6"	77'-0"	11'-0"	8'-0"			4'-9"	3'-6"
2D1	181'-4"	10'-2"	10'-3"	22'-0"	110'-0"	13'-0"	8'-0"			11'-10"	7'-3"
2D2	211'-4"	10'-2"	10'-3"	13'-0"	139'-0"	22'-0"	8'-0"			9'-5"	7'-9"

GENERAL NOTES: UNDERGROUND PONDS

1. DESIGNED ACCORDING TO CURRENT AASHTO 1996 STANDARD SPECIFICATIONS.
2. DESIGNED FOR HS20 LOADING AND TO THE MAXIMUM FILL HEIGHT SHOWN.
3. ALL REINFORCING SHALL BE GRADE 60 KSI.
4. ALL CONCRETE SHALL BE CLASS "C".
5. REINFORCING BARS SHALL BE ADJUSTED TO PROVIDE A MINIMUM OF 1½" CLEAR COVER, UNLESS OTHERWISE NOTED.
6. ALL DIMENSIONS ARE IN FEET AND INCHES AND ALL MASS IS IN POUNDS UNLESS OTHERWISE NOTED.
7. SEE POND LAYOUT SHEETS FOR POND ORIENTATION AND LOCATION; PLUS THE ORIENTATION, SIZE AND LOCATION OF INCOMING AND OUTGOING DRAINAGE LINES.
8. WATERSTOPS SHALL BE HYDROPHILIC WATERSTOPS SUCH AS ADEKA MC-2010M.
9. PROVIDE 3" CLEARANCE WHERE CAST AGAINST SOIL.
10. PROVIDE CONSTRUCTION JOINTS IN WALLS AT A MAXIMUM SPACING OF 30 FOOT ON CENTER. MAXIMUM SLAB AREA TO BE PLACED WITHOUT CONSTRUCTION JOINTS IS 3000 SQUARE FEET. SLAB AND WALL CONSTRUCTION JOINTS SHALL ALIGN.
11. SEE POND LAYOUT FOR FLOWLINE. BOTTOM SLAB SHALL PROVIDE A .02 FT/FT SLOPE ALONG THE EDGE OF WALL. PERIMETER WALL HEIGHT (G) SHALL BE CONSTANT.
12. OFF SET RISER TO MISS ROOF SLAB BEAM.
13. AT UNDERGROUND PONDS 2C AND 2D2 THE ACCESS HATCH IS OPPOSITE HAND FROM WHAT IS SHOWN AND IS LOCATED FROM THE OPPOSITE WALL TO AVOID INTERFERENCE WITH THE DRAINAGE DITCH.
14. COLUMN SPACING IS 20.0 FT O.C. MAX. UNLESS NOTED OTHERWISE. THERE WILL BE NO COLUMNS WITHIN THE SPLITTER BOX, WHERE SPLITTER BOX EXTENDS TO THE ROOF BEAM OR BEYOND THE BEAM IS SUPPORTED BY THE SPLITTER BOX WALLS.
15. LAP TOP BARS @ MID SPAN AND BOTTOM BARS @ SUPPORTS.

ESTIMATED QUANTITIES*			
POND DESIGNATION	CONCRETE (CY)	REINFORCING BARS (LBS)	EXCAVATION (CY)
1A	623	144,925	
1B	505	115,855	
1C	476	109,213	
2A	572	131,682	
2B	356	82,752	
2C	536	123,427	
2D1	712	165,990	
2D2	823	191,615	

* QUANTITIES FOR CONTRACTOR'S ESTIMATE ONLY. ALL ITEMS ARE SUBSIDIERY TO THE POND ITEM.

STATE OF TEXAS
WILLY R. BURNS
44162
REGISTERED
ENGINEER
4/2/99

NO. DATE REVISION APPROVED

Turner Collie & Braden Inc.
Engineers • Planners • Project Managers

DATE SUTTON JOB NO. 62-14004-011 ADDENDUM

© 1998 Texas Department of Transportation

US 183

WATER QUALITY PONDS
STRUCTURAL DETAILS

SHEET 1 OF 11

Designed	WRB	FED. RD. DIV. NO.	STATE	FEDERAL AID PROJECT NO.				HIGHWAY NO.
Checked		6	TEXAS	NH99(556)				US 183
Drawn	MR	STATE DIST. NO.	COUNTY	CONTROL NO.	SECTION NO.	JOB NO.		SHEET NO.
Checked		14	WILLIAMSON	151	5	072		261a

UGPDTL1.DGN

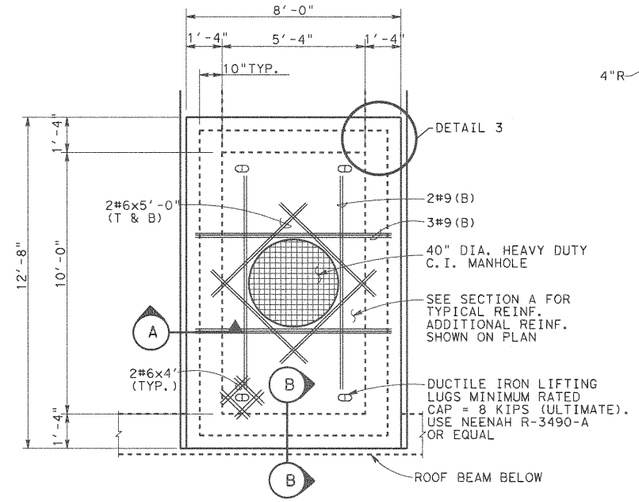

MAINTENANCE ACCESS HATCH

DETAIL 1

SCALE: 3/8" = 1'-0"

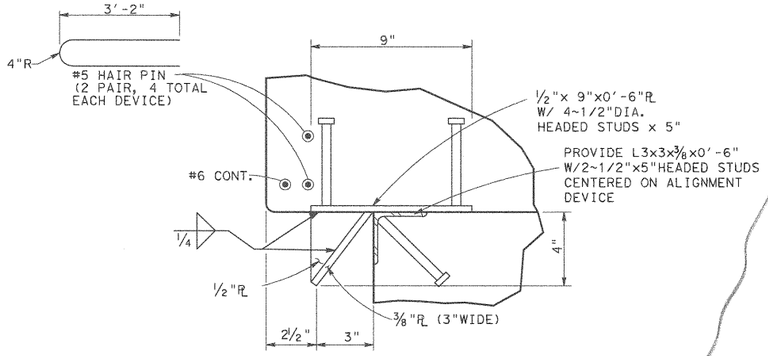

PROVIDE 8 DEVICES (GALV. AFTER FABRICATION) 2 EACH SIDE

DETAIL 2

ALIGNMENT DEVICE

SCALE: 3" = 1'-0"

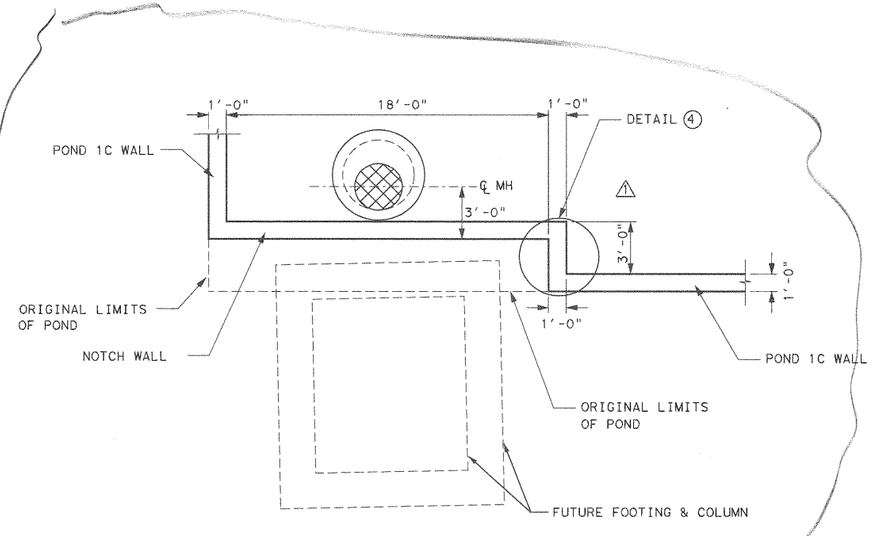

POND 1C MODIFICATION

SCALE: 3" = 1'-0"

SECTION A

SCALE: 1/2" = 1'-0"

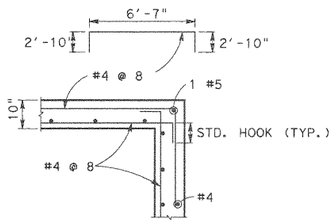

DETAIL 3

HORIZONTAL REINFORCEMENT

SCALE: 1/2" = 1'-0"

ACCESS HATCH		
POND	H1 (±)	ELEV. A
1A	8'-8"	929.20
1B	6'-7"	931.98
1C	6'-7"	931.62
2A	8'-4"	932.04
2B	5'-10"	932.20
2C	4'-10"	933.06
2D1	7'-4"	934.04
2D2	7'-11"	932.50

MANHOLE TABLE		
POND	H2	H3
1A	9'-0"	5'-0"
1B	9'-0"	4'-0"
1C	8'-0"	4'-0"
2A	9'-0"	4'-0"
2B	7'-0"	4'-0"
2C	3'-0"	5'-0"
2D1	10'-0"	4'-0"
2D2	7'-0"	5'-0"

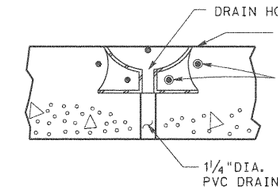

SECTION B

SCALE: 1"= 1'-0"

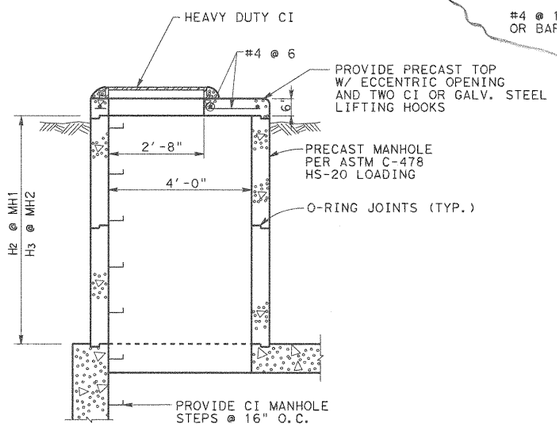

MANHOLE DETAIL

SCALE: 1/2" = 1'-0"

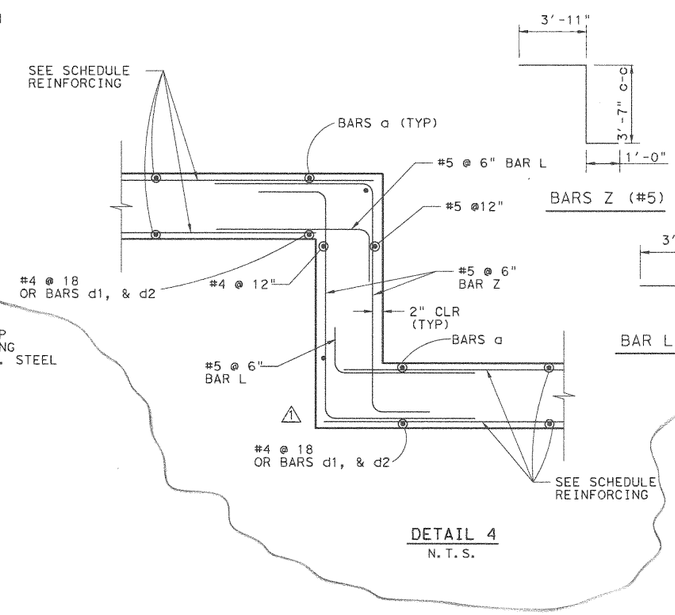

DETAIL 4

N.T.S.

STATE OF TEXAS
WALLY R. BURNS
44162
REGISTERED PROFESSIONAL ENGINEER
Wally R Burns
01/29/01

1	JAN. 26 01	ADD NOTCH	WRB
NO.	DATE	REVISION	APPROVED

Turner Collie & Braden Inc.
Engineers • Planners • Project Managers

TRANSPORTATION | Unit | Job No. 81-07401-024 | Approved

© 1998 Texas Department of Transportation

US 183
WATER QUALITY PONDS
STRUCTURAL DETAILS

SCALE: AS NOTED — SHEET 2 OF 11

Designed	Checked	Drawn	Checked	FED. RD. DIV. NO.	STATE	FEDERAL AID PROJECT NO.				HIGHWAY NO.
WRB		MR		6	TEXAS	NH99(556)				US 183
				STATE DIST. NO.	COUNTY	CONTROL NO.	SECTION NO.	JOB NO.		SHEET NO.
				14	WILLIAMSON	151	5	072		261b

UGPDT2.DGN

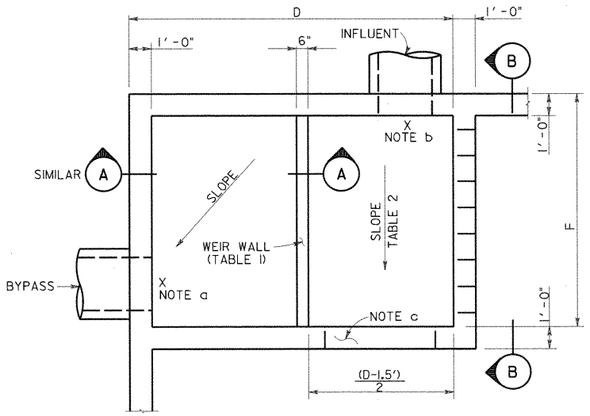

SEE TABLE SHEET I OF II
FOR DIMENSIONS D & F

SPLITTER BOX PLAN (POND 2D2)

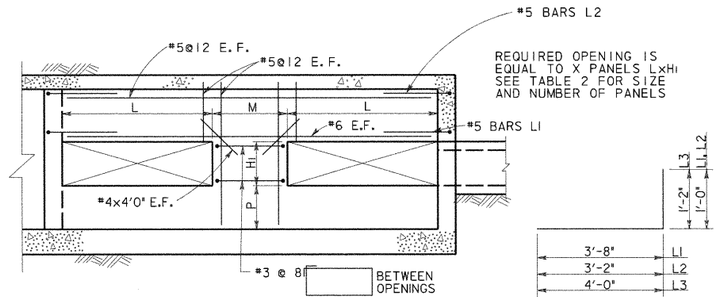

SECTION B

BARS L

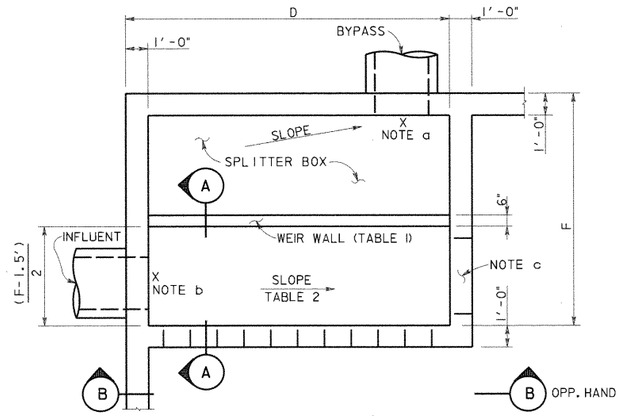

SEE TABLE SHEET I OF II
FOR DIMENSIONS D & F

SPLITTER BOX PLAN (TYPICAL)

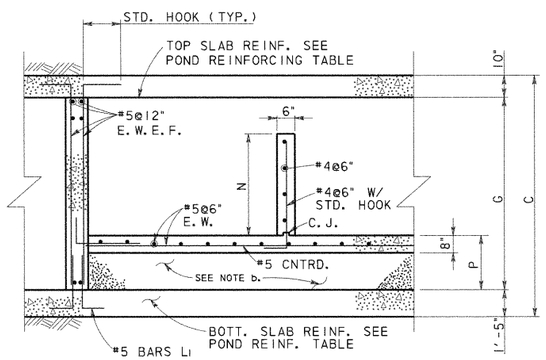

SECTION A

TABLE I BYPASS OUTFALL				
POND	BYPASS LINE ELEVATION	BYPASS WEIR		
		TOP OF WALL ELEV.	N*	P
1A	914.23	917.78	3'-6"	1'-6"
1B	918.44	921.00	2'-6"	2'-6"
1C	918.39	922.75	4'-3"	1'-9"
2A	917.38	920.92	3'-6"	1'-6"
2B	921.92	923.49	1'-6"	3'-6"
2C	923.82	925.90	2'-0"	4'-6"
2D1	920.53	923.63	3'-0"	2'-6"
2D2	916.71	921.85	5'-0"	1'-0"

*N IS MINIMUM DIMENSION, SPLITTER BOX FLOOR SLOPES, HOLD TOP OF WEIR WALL CONSTANT.

TABLE 2 INFLUENT LINE						
POND	INFLUENT ELEV.	SLOPE %	INFLUENT WALL			
			OPENINGS X	M	L	HI
1A	914.28	0.29	4	3'-0"	3'-0"	2'-6"
1B	918.50	0.48	3	2'-9"	3'-0"	1'-6"
1C	918.50	0.85	3	2'-9"	3'-0"	1'-6"
2A	917.42	0.33	3	2'-9"	3'-0"	1'-6"
2B	921.99	0.54	1	0	14'-8"	0'-9"
2C	923.90	0.62	3	2'-9"	3'-0"	1'-0"
2D1	920.63	0.53	3	6'-0"	3'-0"	2'-0"
2D2	916.85	0.78	4	3'-8"	2'-6"	2'-0"

NOTES:

a. SEE TABLE I THIS SHEET FOR OUT FLOW ELEVATION. SLOPE SLAB FROM OVERFLOW WEIR TO OUTFALL.

b. SEE TABLE 2 FOR INFLUENT ELEVATION. TOP OF SPLITTER BOX SLAB TO MATCH INFLOW ELEVATION. AT POND 2D1 THE ELEVATION SHOWN REPRESENTS A 6" DROP FROM THE INFLUENT FLOWLINE. CONTRACTOR MAY USE CEMENT STABILIZED SAND UNDER THE SLAB OR PLACE CONCRETE FOR THE FILL.

c. PROVIDE 3'x .75' OPENING AT BOTTOM OF SPLITTER BOX WALL AT END OF CHANNEL.

STATE OF TEXAS
WILLY R. BURNS
54103
REGISTERED
PROFESSIONAL ENGINEER
4/28/99

NO.	DATE	REVISION	APPROVED

Turner Collie & Braden Inc.
Engineers • Planners • Project Managers

SUTTON — Job No. 62-14004-011

© 1998 Texas Department of Transportation

US 183
WATER QUALITY PONDS
STRUCTURAL DETAILS

SCALE: AS NOTED — SHEET 3 OF 11

Designed	WRB	FED. RD. DIV. NO.	STATE	FEDERAL AID PROJECT NO.				HIGHWAY NO.
Checked		6	TEXAS	NH99(556)				US 183
Drawn	MR	STATE DIST. NO.	COUNTY	CONTROL NO.	SECTION NO.	JOB NO.		SHEET NO.
Checked		14	WILLIAMSON	151	5	072		261c

UGPDT3.DGN

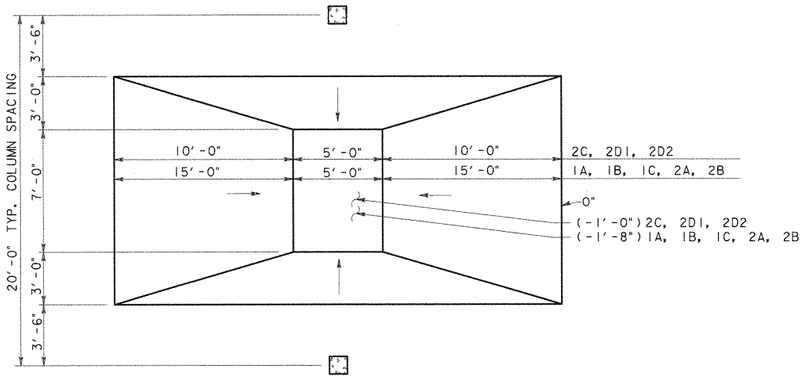

PLAN

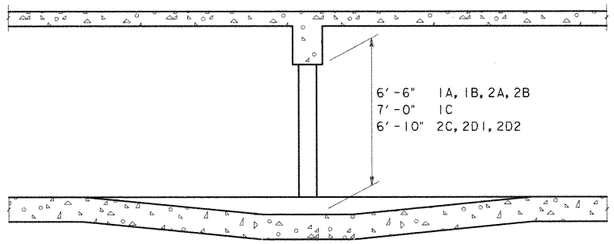

SECTION

REINFORCING LAP SPLICE & EMBEDMENT SCHEDULE						
BAR SIZE	MIN LAP LENGTH		MIN EMBEDMENT LENGTH			
	TOP BARS	OTHER BARS	TOP BARS		OTHER BARS	
			STR.	STD. HOOK	STR.	STD. HOOK
4	24"	20"	17"	9"	12"	7"
5	30"	24"	21"	10"	15"	8"
6	36"	28"	25"	10"	18"	8"
8	58"	41"	42"	15"	30"	12"

PROVIDE ONE CROSS OVER DETAIL FOR E ≤ 80'
PROVIDE TWO CROSS OVER DETAILS FOR E > 80'

CROSS OVER DETAIL
SCALE: 1/4" = 1'-0"

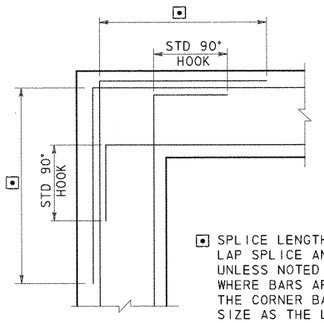

⊡ SPLICE LENGTH SEE REINFORCING LAP SPLICE AND EMBEDMENT TABLES. UNLESS NOTED OTHERWISE ON DWGS WHERE BARS ARE DIFFERENT SIZE THE CORNER BAR SHALL BE SAME SIZE AS THE LARGER BAR

CORNER REINFORCING
FOR WALLS OR GRADE BEAMS

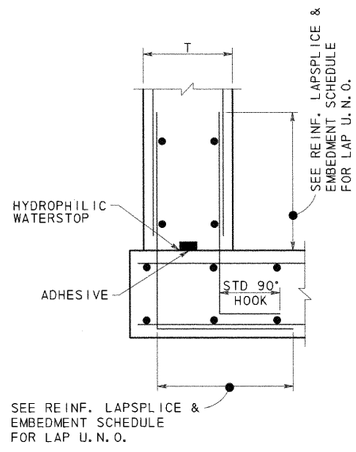

CONSTRUCTION JOINT
BASE OF WALLS

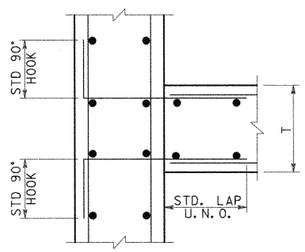

CONSTRUCTION JOINT
WALL INTERSECTIONS

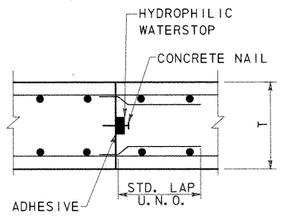

CONSTRUCTION JOINT
SLABS

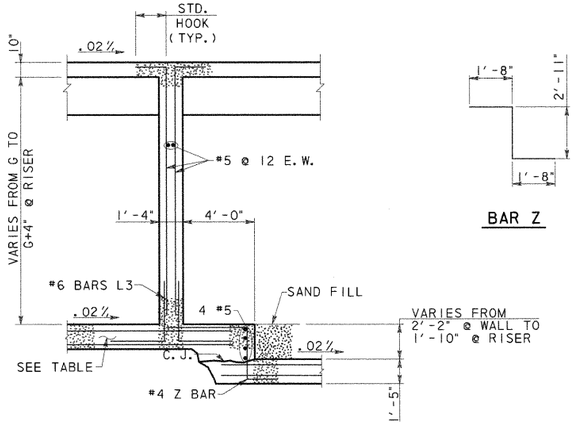

SECTION B

BAR Z

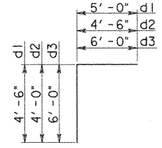

BARS D

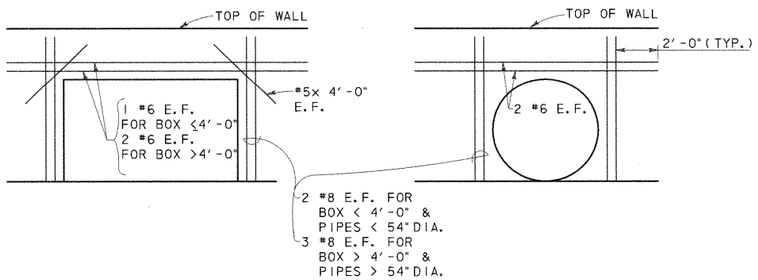

ADDITIONAL REINFORCING @ OPENINGS



NO.	DATE	REVISION	APPROVED

Turner Collie & Braden Inc.
Engineers • Planners • Project Managers

DATE: SUTTON | JOB NO. 62-14004-011 | APPROVED

© 1998 Texas Department of Transportation

US 183
WATER QUALITY PONDS
STRUCTURAL DETAILS

SCALE: AS NOTED | SHEET 4 OF 11

DESIGNED	CHECKED	DRAWN	CHECKED	FED. RD. DIV. NO.	STATE DIST. NO.	STATE	COUNTY	FEDERAL AID PROJECT NO. CONTROL NO.	SECTION NO.	JOB NO.	SHEET NO.	HIGHWAY NO.
WRB		MR		6	14	TEXAS	WILLIAMSON	NH99(556) 151	5	072	261d	US 183

UGPDT4.DGN

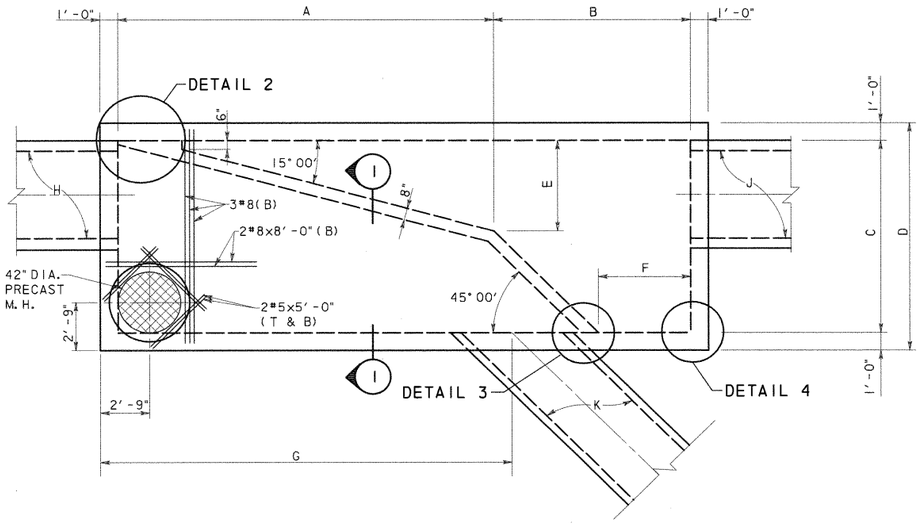

SPLITTER BOX DIMENSION TABLE

BOX LOCATION	A	B	C	D	E	F	G	H	J	K
POND SPRINGS	21'-0"	11'-0"	11'-0"	13'-0"	5'-2"	5'-2"	22'-0"	6x5 RCB	6x5 RCB	4x4 RCB
620 LEFT SIDE	13'-9"	8'-9"	8'-0"	10'-0"	3'-2"	4'-1"	13'-7"	*48" RCP	4x4 RCB	48" RCP

*48" RCP @ 15° SKEW
SEE DRAINAGE DETAIL SHEET.

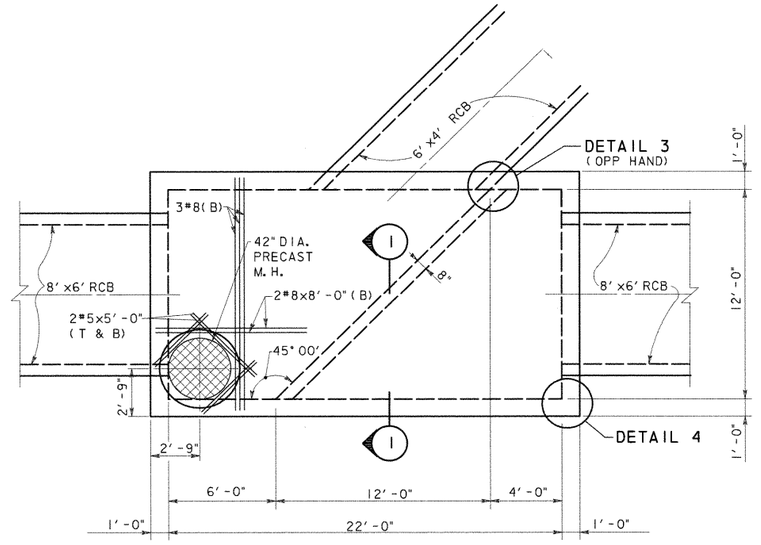

620 RIGHT SIDE
PLAN VIEW
SCALE: 1/4" = 1'-0"

ESTIMATED QUANTITIES			
BOX	CONCRETE (YD^3) *	REINFORCING (LBS) *	STRUCTURAL EXCAVATION (YD)
POND SPRINGS	56.8	7,964	
620 LEFT	32.5	4,096	
620 RIGHT	48.8	5,877	

* QUANTITIES FOR CONTRACTOR'S ESTIMATE ONLY. ALL ITEMS ARE SUBSIDIARY TO THE SPLITTER BOX.

PLAN VIEW
SCALE: 1/4" = 1'-0"

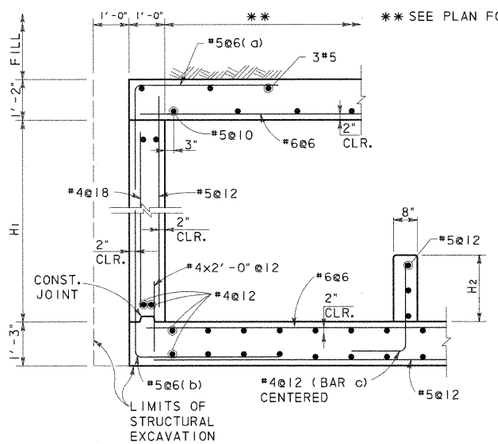

SECTION 1
SCALE: 1/2" = 1'-0"

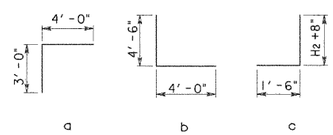

BOX LOCATION	H1	H2
POND SPRINGS	5'-6"	3'-0 1/2"
620 LEFT SIDE	4'-6"	2'-6"
620 RIGHT SIDE	6'-8"	1'-3"

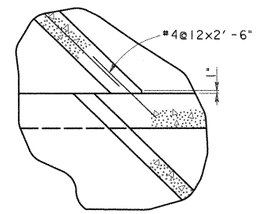

DETAIL 3
SCALE: 1/2" = 1'-0"

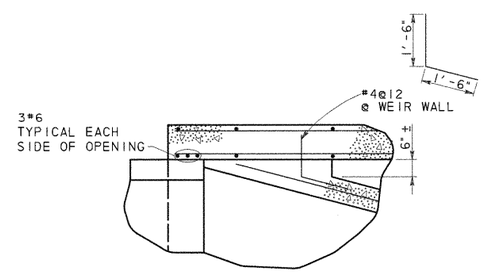

DETAIL 2
SCALE: 1/2" = 1'-0"

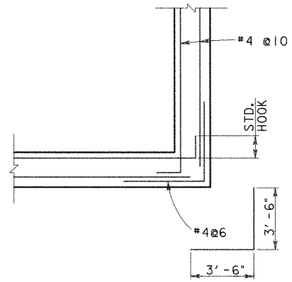

DETAIL 4
SCALE: 1/2" = 1'-0"

GENERAL NOTES:

1. DESIGNED ACCORDING TO CURRENT AASHTO 1996 STANDARD SPECIFICATIONS.
2. DESIGNED FOR HS20 LOADING AND TO THE MAXIMUM FILL HEIGHT SHOWN.
3. ALL REINFORCING SHALL BE GRADE 60 KSI.
4. ALL CONCRETE SHALL BE CLASS "C".
5. ALL DIMENSIONS ARE IN FEET AND INCHES AND ALL MASS IS IN POUNDS UNLESS OTHERWISE NOTED.



NO.	DATE	REVISION	APPROVED

Turner Collie & Braden Inc.
Engineers • Planners • Project Managers

DATE: SUTTON | JOB NO. 62-14004-011 | APPROVED

© 1998 Texas Department of Transportation

US 183
WATER QUALITY PONDS
STRUCTURAL DETAILS

SCALE: AS NOTED | SHEET 6 OF 11

Designed	WRB	FED. RD. DIV. NO.	STATE	FEDERAL AID PROJECT NO.				HIGHWAY NO.
Checked		6	TEXAS	NH99(556)				US 183
Drawn	MR	STATE DIST. NO.	COUNTY	CONTROL NO.	SECTION NO.	JOB NO.		SHEET NO.
Checked		14	WILLIAMSON	151	5	072		261f

UGPDT6.DGN

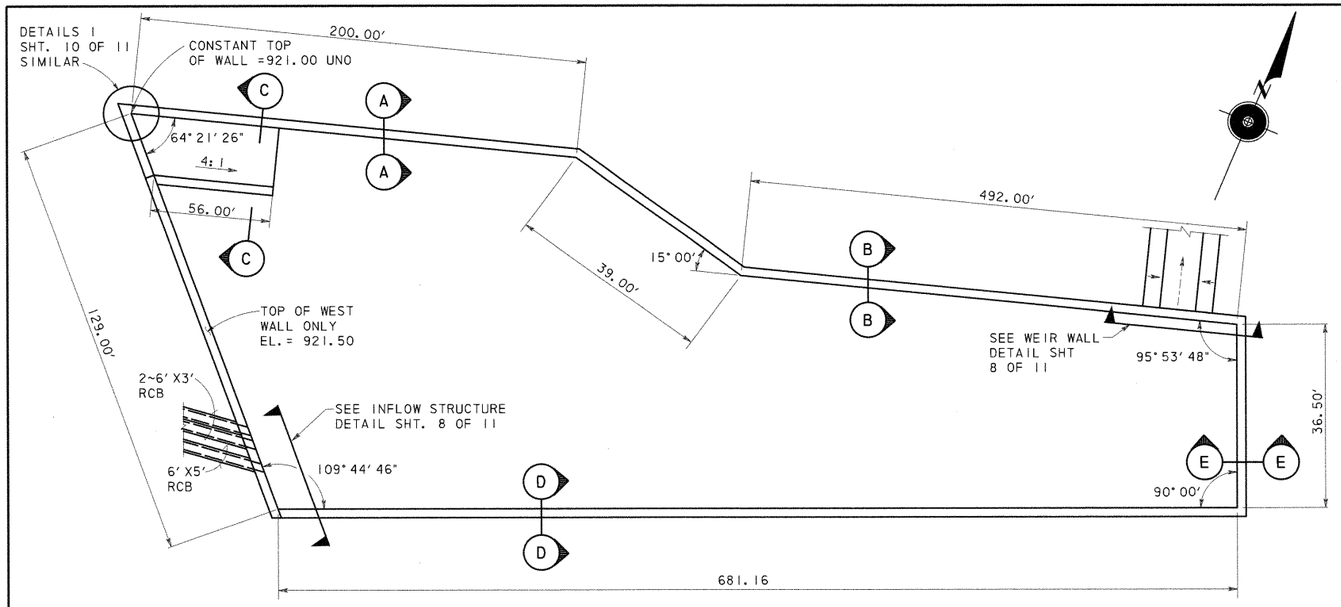

SYSTEM 3 DETENTION POND PLAN

ESTIMATED QUANTITIES (SECTION A)		
CONCRETE (YD^3) *	REINFORCING (LBS) *	** SQ. FT.
2,626	771,900	24,431

* QUANTITIES FOR CONTRACTOR'S ESTIMATE ONLY.

** EXPOSED FACE

*** WALL REINFORCING FOR 32' PANEL (SECT. A)									
A1 ~ 26 #5 @ 15" c-c		A2 ~ 25 #6 @ 15" c-c		A3 ~ 25 #7 @ 15" c-c		A4 ~ 26 #9 @ 15" c-c		A5 ~ 25 #9 @ 15" c-c	
Lgth	lb	Lgth	lb	Lgth	lb	Lgth	lb	Lgth	lb
129	292	145	455	218	928	188	1384	118	837

*** ONE SIDE SHOWN, BARS A BOTH SIDES

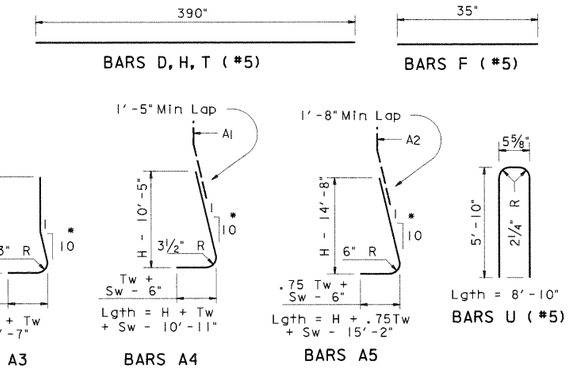

* A BARS ARE STRAIGHT IN FRONT FACE.

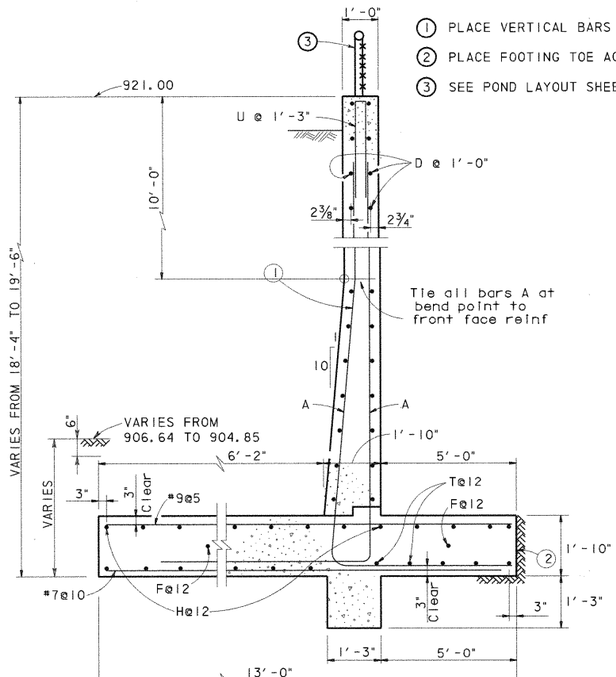

SECTION A-A
SCALE: ½" = 1'-0"

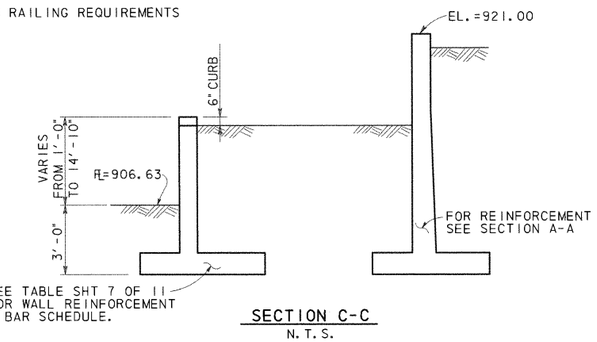

SECTION C-C
N.T.S.

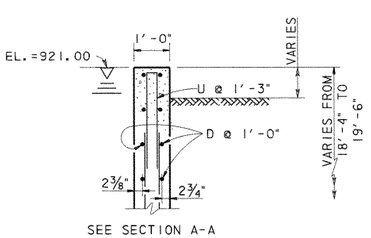

SEE SECTION A-A FOR REST OF DETAIL

SECTION D-D
SCALE: ½" = 1'-0"

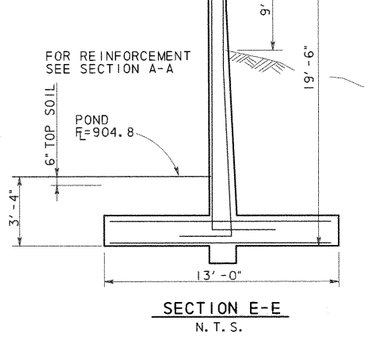

SECTION E-E
N.T.S.

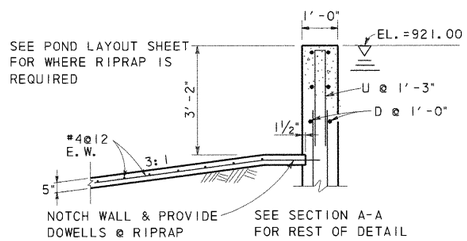

SECTION B-B
SCALE: ½" = 1'-0"

ELEVATION

GENERAL NOTES:

1. DESIGNED ACCORDING TO CURRENT AASHTO 1996 STANDARD SPECIFICATIONS.
2. DESIGNED FOR HS20 LOADING AND EQUIVALENT SOIL PRESSURE OF 60 PCF.
3. ALL REINFORCING SHALL BE GRADE 60 KSI.
4. ALL CONCRETE SHALL BE CLASS "A".
5. REINFORCING BARS SHALL BE ADJUSTED TO PROVIDE A MINIMUM OF 1½" CLEAR COVER.
6. ALL DIMENSIONS ARE IN FEET AND INCHES AND ALL MASS IS IN POUNDS UNLESS OTHERWISE NOTED.
7. CONSTRUCTION JOINT SHALL BE AT 32 FT. MAX. OC. PROVIDE CONSTRUCTION AT 15' MAX FROM EACH CORNER. CORNER CLOSURES SHALL BE PLACED LAST.
8. PROVIDE AN EXPANSION JOINT AFTER MAXIMUM OF 3 PANELS.
9. SEE SHEET 11 OF 11 FOR CONSTRUCTION AND EXPANSION JOINT DETAILS.

STATE OF TEXAS
WALLY R. BURNS
44162
REGISTERED PROFESSIONAL ENGINEER
4/28/99

NO.	DATE	REVISION	APPROVED

Turner Collie & Braden Inc.
Engineers • Planners • Project Managers

SUTTON | Job No. 62-14004-011 | Approved

© 1998 Texas Department of Transportation

US 183
WATER QUALITY PONDS
STRUCTURAL DETAILS

SCALE: AS NOTED | SHEET 7 OF 11

Designed	Checked	Drawn	Checked	FED. RD. DIV. NO.	STATE DIST. NO.	STATE	COUNTY	CONTROL NO.	SECTION NO.	JOB NO.	HIGHWAY NO. / SHEET NO.
WRB		MR		6	14	TEXAS	WILLIAMSON	151	5	072	US 183 / 261g

FEDERAL AID PROJECT NO. NH99(556)

UGPDT7.DGN

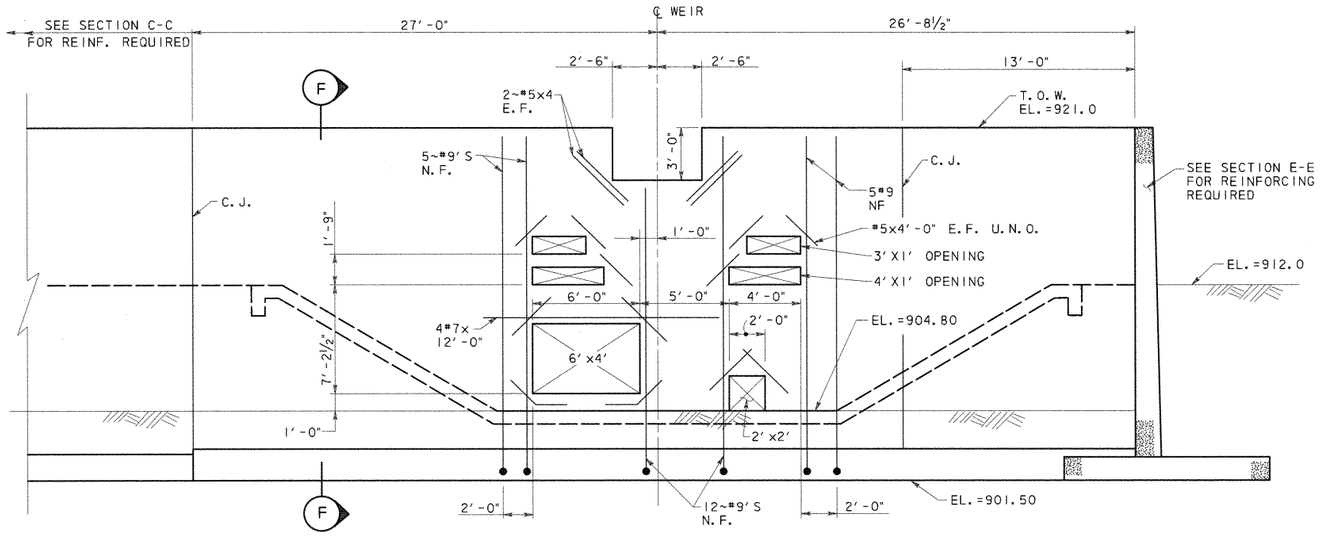

ADDITIONAL REINFORCING SHOWN, SEE SECTION F FOR TYPICAL REINF.

WEIR WALL DETAIL

SCALE: ¼" = 1'-0"

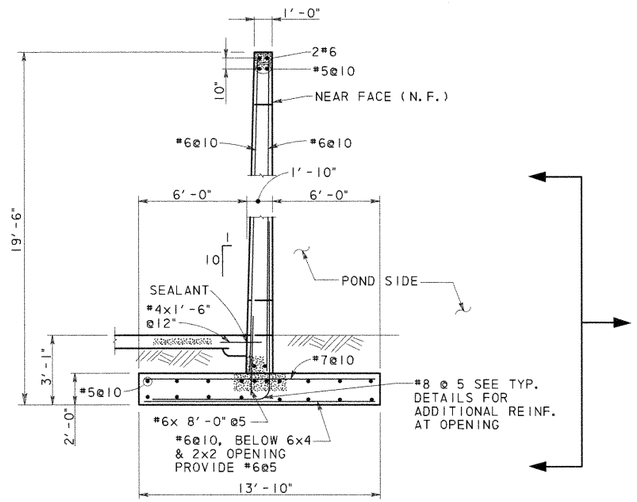

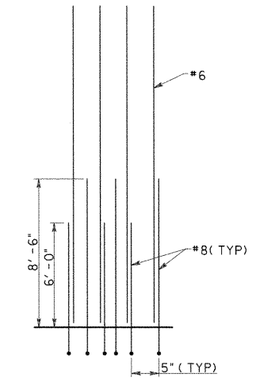

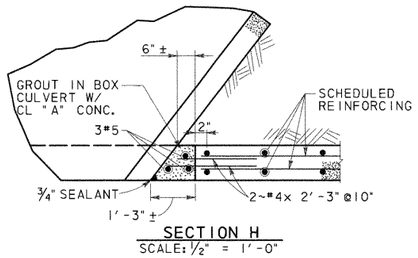

SECTION H

SCALE: ½" = 1'-0"

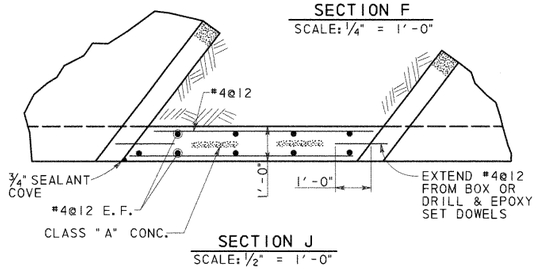

SECTION J

SCALE: ½" = 1'-0"

SECTION F

SCALE: ¼" = 1'-0"

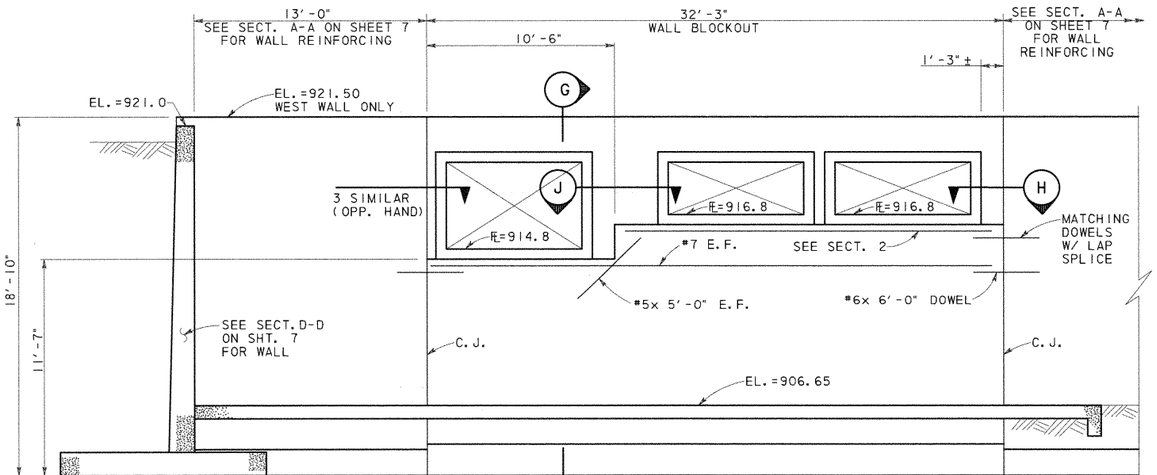

INFLOW STRUCTURE DETAIL

SCALE: ¼" = 1'-0"

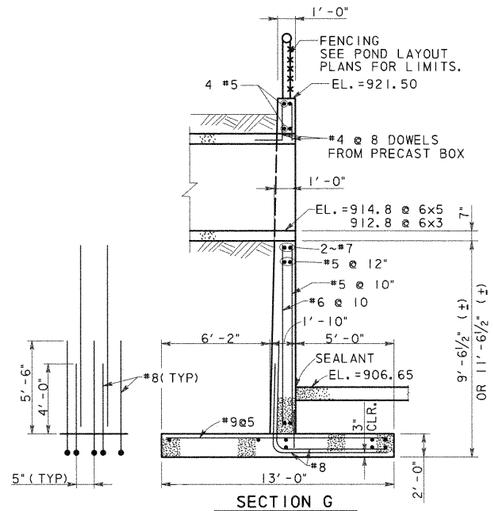

SECTION G

SCALE: ¼" = 1'-0"

STATE OF TEXAS · WALLY R. BURNS · 64262 · REGISTERED PROFESSIONAL ENGINEER

Wally R. Burns 4/28/99

NO.	DATE	REVISION	APPROVED

Turner Collie & Braden Inc.

Engineers • Planners • Project Managers

SUTTON | Job No. 62-14004-011 | Approved

© 1998 Texas Department of Transportation

US 183

WATER QUALITY PONDS STRUCTURAL DETAILS

SCALE: AS NOTED — SHEET 8 OF 11

Designed WRB	Fed. Rd. Div. No. 6	State TEXAS	Federal Aid Project No. NH99(556)	Highway No. US 183
Checked				
Drawn MR	State Dist. No. 14	County WILLIAMSON	Control No. 151	Section No. 5
Checked				Job No. 072

Sheet No. 261h

UGPDT8.DGN

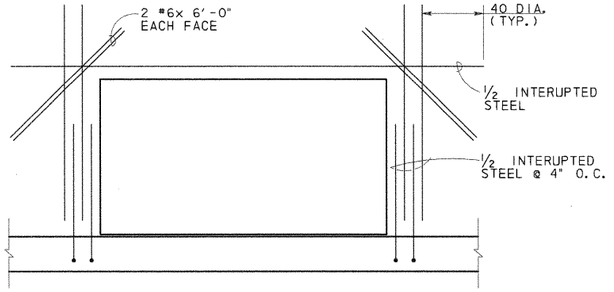

CULVERT OPENINGS

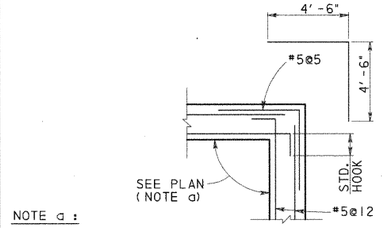

NOTE a :

SEE 620 MEDIAN POND (SHT. 5 OF 11), SYSTEM 3 POND (SHT. 7 OF 11)

DETAIL 1
SCALE: 1/2" = 1'-0"

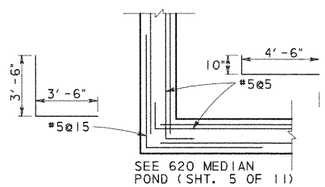

DETAIL 2
SCALE: 1/2" = 1'-0"

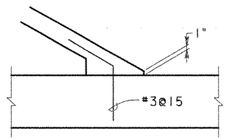

DETAIL 3
SCALE: 3/4" = 1'-0"

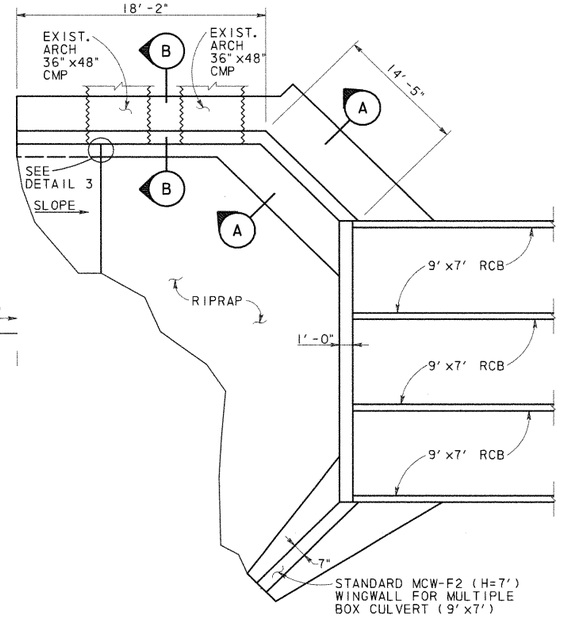

CULVERT @ POND SPRINGS PLAN
N. T. S.

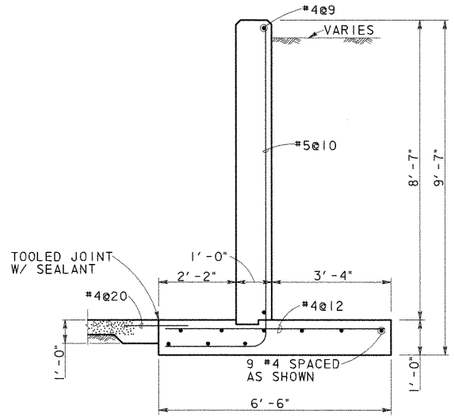

SECTION A-A
SCALE: 1/2" = 1'-0"

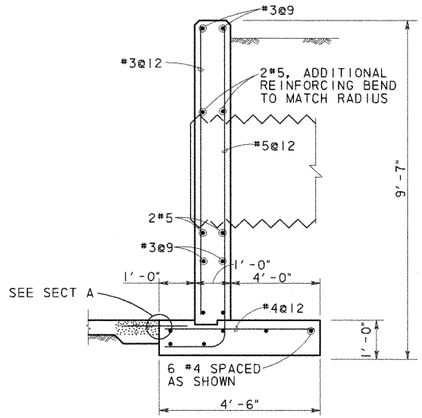

SECTION B-B
SCALE: 1/2" = 1'-0"

POND SPRINGS HEADWALL ESTIMATE QUANTITIES	
CONCRETE (YD^3) *	REINFORCING (LB) *
20.8	672

* QUANTITIES FOR CONTRACTOR'S INFORMATION ONLY. QUANTITIES SHOWN DO NOT INCLUDE THE .5 MCW-F2 WINGWALL OR THE CULVERT CURB.

THE HEADWALL SHALL BE PAID FOR AS MCW-F2(SPL).

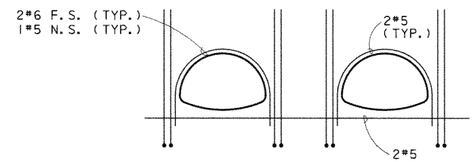

ADDITIONAL REINFORCMENT SHOWN. SEE SECTION B FOR TYPICAL

ELEVATION @ ARCH PIPE
N. T. S.

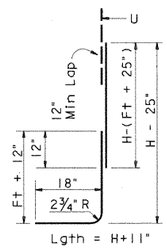

BARS B

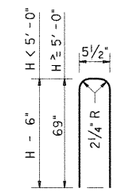

BARS U

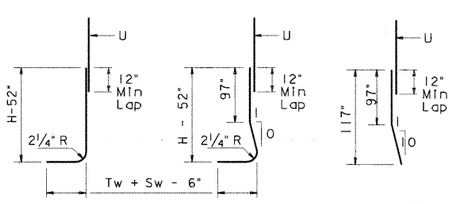

BARS A1

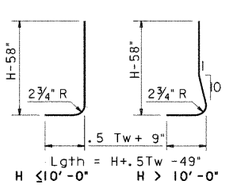

BARS A2

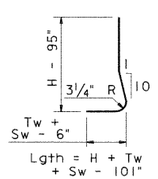

BARS A3

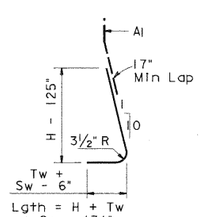

BARS A4

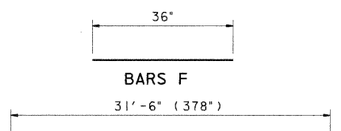

BARS D, H, T

BAR DETAILS POND SPRING

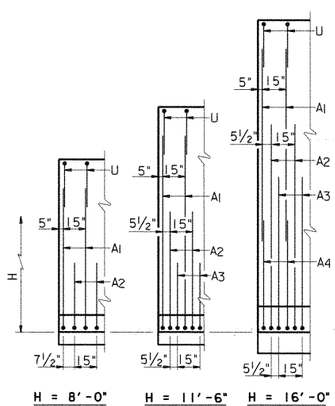

PARTIAL WALL ELEVATIONS
(Showing vertical reinforcing pattern in back face)

STATE OF TEXAS
WILLY R. BURNS
44162
REGISTERED
PROFESSIONAL ENGINEER
6/8/98

NO.	DATE	REVISION	APPROVED

Turner Collie & Braden Inc.
Engineers • Planners • Project Managers

TRANSPORTATION | Job No. 81-07401-024 | Approved

© 1998 Texas Department of Transportation

US 183
MISCELLANEOUS
WATER QUALITY PONDS
STRUCTURAL DETAILS

SCALE: AS NOTED | SHEET 10 OF 11

Designed	WRB	FED. RD. DIV. NO.	STATE	FEDERAL AID PROJECT NO.				HIGHWAY NO.
Checked		6	TEXAS	NH99(556)				US 183
Drawn	MR	STATE DIST. NO.	COUNTY	CONTROL NO.	SECTION NO.	JOB NO.		SHEET NO.
Checked		14	WILLIAMSON	151	5	072		261J

UGPDT10.DGN

AF 41904A

Ultimate Drainage Areas North of R.M. 620 Were Used In Storm Sewer And Water Quality Pond Design

R.M. 620

PECAN PARK

LAKE CREEK PARKWAY

HYMEADOW

Q50 = 447.4 cfs
Outfall 1

Pond 1A

Pond 1B

Pond 1C

Outfall 2
Q100 = 412 cfs
Q50 = 385 cfs

Pond 2A

Pond 2B

Pond 2C

Pond 2D1

Pond 2D2

R.M. 620 Median Pond

Q50 = 800 cfs

Q50 = 89.2 cfs

To Drainage Structures (By Others)

MELLOW MEADOWS DRIVE

LAKESTOP BLVD.

Interim Drainage Areas

US 183

R.M. 620

ANDERSON MILL ROAD

CONTRIBUTING AREA TO LAKE CREEK CHANNEL

A_{TOTAL} = 1133 ACRES
Q_{50} = 4100 cfs *
Q_{100} = 4400 cfs *

* THESE FLOWS ARE BASED ON REGIONAL ANALYSIS OF THE ENTIRE CONTRIBUTING AREA AND DO NOT EQUATE TO THE ACCUMULATED THYSYS FLOWS.

Q50 = 200 cfs

NO.	DATE	REVISION	APPROV.
4			
3			
2			
1			

Turner Collie & Braden Inc.
CONSULTING ENGINEERS
TEXAS AUSTIN/DALLAS/HOUSTON/PORT ARTHUR
COLORADO DENVER

Unit: AUSTIN | Job No. 72-07401-022 | Approved

STATE DEPARTMENT OF HIGHWAYS AND PUBLIC TRANSPORTATION

©1998 TxDOT

DRAINAGE AREA MAP

SCALE: 1" = 200'

Designed DAN	FED. NO. DIV. NO.	STATE	FEDERAL AID PROJECT NO.			HIGHWAY NO.
Checked	6	TEXAS	NH 99(556)			U.S. 183
Drawn WWS	STATE DIST. NO.	COUNTY	CONTROL NO.	SECTION NO.	JOB NO.	SHEET NO.
Checked DAN	14	WILLIAMSON	151	05	072	262a

STATE OF TEXAS
Robert W. Barnett
49537
REGISTERED PROFESSIONAL ENGINEER

Robert W. Barnett
5-09-88

A.F. 61904A

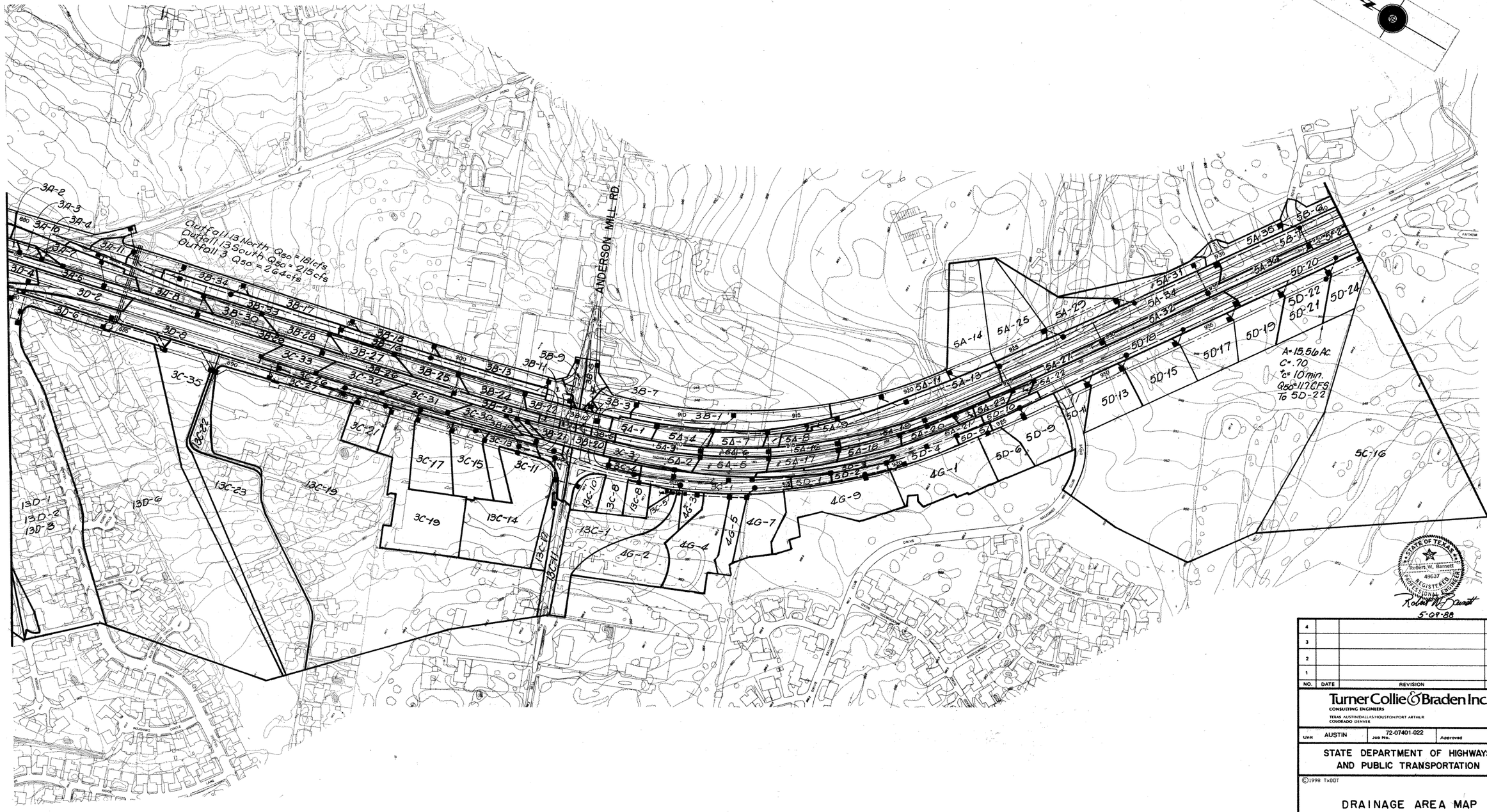

NO.	DATE	REVISION	APPROV.
4			
3			
2			
1			

Turner Collie & Braden Inc.
CONSULTING ENGINEERS
TEXAS AUSTIN/DALLAS/HOUSTON/PORT ARTHUR
COLORADO DENVER

Unit AUSTIN | Job No. 72-07401-022 | Approved

STATE DEPARTMENT OF HIGHWAYS AND PUBLIC TRANSPORTATION

©1998 TxDOT

DRAINAGE AREA MAP

SCALE: 1"=200'

Designed DAN	FED. RD. DIV. NO.	STATE	FEDERAL AID PROJECT NO.			HIGHWAY NO.
Checked	6	TEXAS	NH 99(556)			U.S. 183
Drawn WWS	STATE DIST. NO.	COUNTY	CONTROL NO.	SECTION NO.	JOB NO.	SHEET NO.
Checked DAN	14	WILLIAMSON	151	05	072	202b

A.F. 41804A

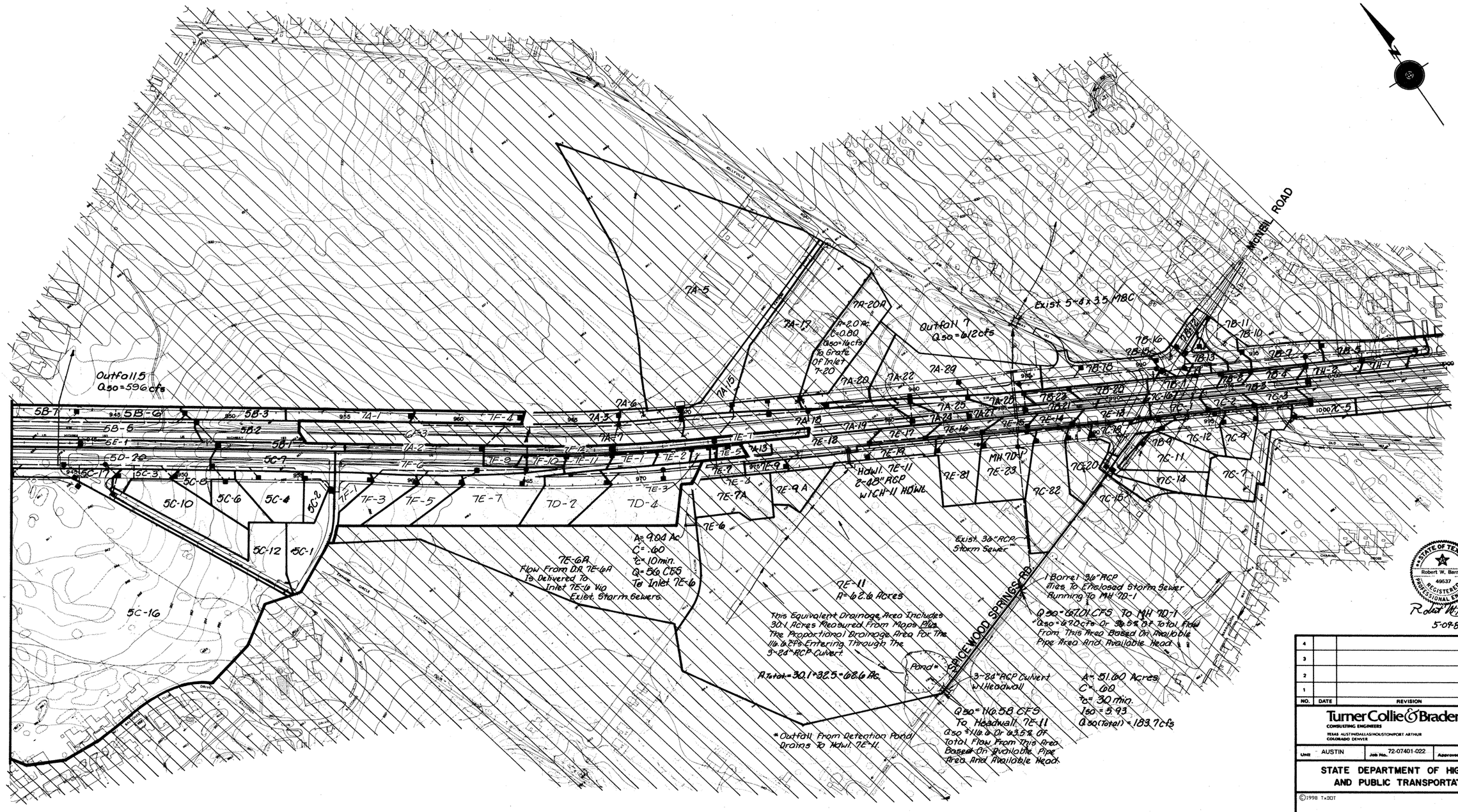
MICHEL ROAD
Outfall 5
Q50=596cfs
Outfall 7
Q50=612cfs
Exist 5-8'x3.5' MBC
7A-5
7A-17
7A-20A
A=2.0 Ac.
C=0.80
Q50=14cfs
To Grate Of Inlet 7-20
7A-15
7A-6
7A-3
7A-7
7A-18
7A-19
7A-20
7A-22
7A-29
7A-25
7A-24
7A-27
7A-26
7A-1
7A-2
7A-13
7F-4
7F-12
7F-11
7F-10
7F-9
7F-8
7F-6
7F-5
7F-3
7F-2
7F-1
7E-1
7E-2
7E-5
7E-7
7E-8
7E-9
7E-9A
7E-9A
7E-6
7E-3
7E-4
7E-7A
7E-10
7E-12
7E-13
7E-14
7E-15
7E-16
7E-17
7E-18
7E-19
7E-11
7E-81
7E-82
7E-23
MH 7D-1
7D-2
7D-4
HDWL 7E-11
2-48" RCP
W/CH-11 HDWL
5B-7
5B-6
5B-5
5B-3
5B-2
5B-1
5E-1
5D-20
5C-17
5C-7
5C-3
5C-8
5C-10
5C-6
5C-4
5C-2
5C-12
5C-1
5C-16
7B-11
7B-10
7B-16
7B-15
7B-13
7B-12
7B-14
7B-18
7B-17
7B-1
7B-2
7B-3
7B-4
7B-5
7B-6
7B-7
7B-8
7B-9
7B-21
7B-22
7B-23
7C-16
7C-1
7C-2
7C-3
1000 7C-5
7C-18
7C-19
7C-20
7C-12
7C-4
7C-11
7C-14
7C-7
7C-82
7C-15
7D-9
7D-11
7D-12
7D-13
7D-14
7D-15
7D-16
7D-17
7D-18
7D-19
7D-20
7D-21
7D-22
7D-23
7D-24
7D-25
7D-26
7D-27
7D-28
7D-29
7D-30
7D-31
7D-32
7D-33
7D-34
7D-35
7D-36
7D-37
7D-38
7D-39
7D-40
7D-41
7D-42
7D-43
7D-44
7D-45
7D-46
7D-47
7D-48
7D-49
7D-50

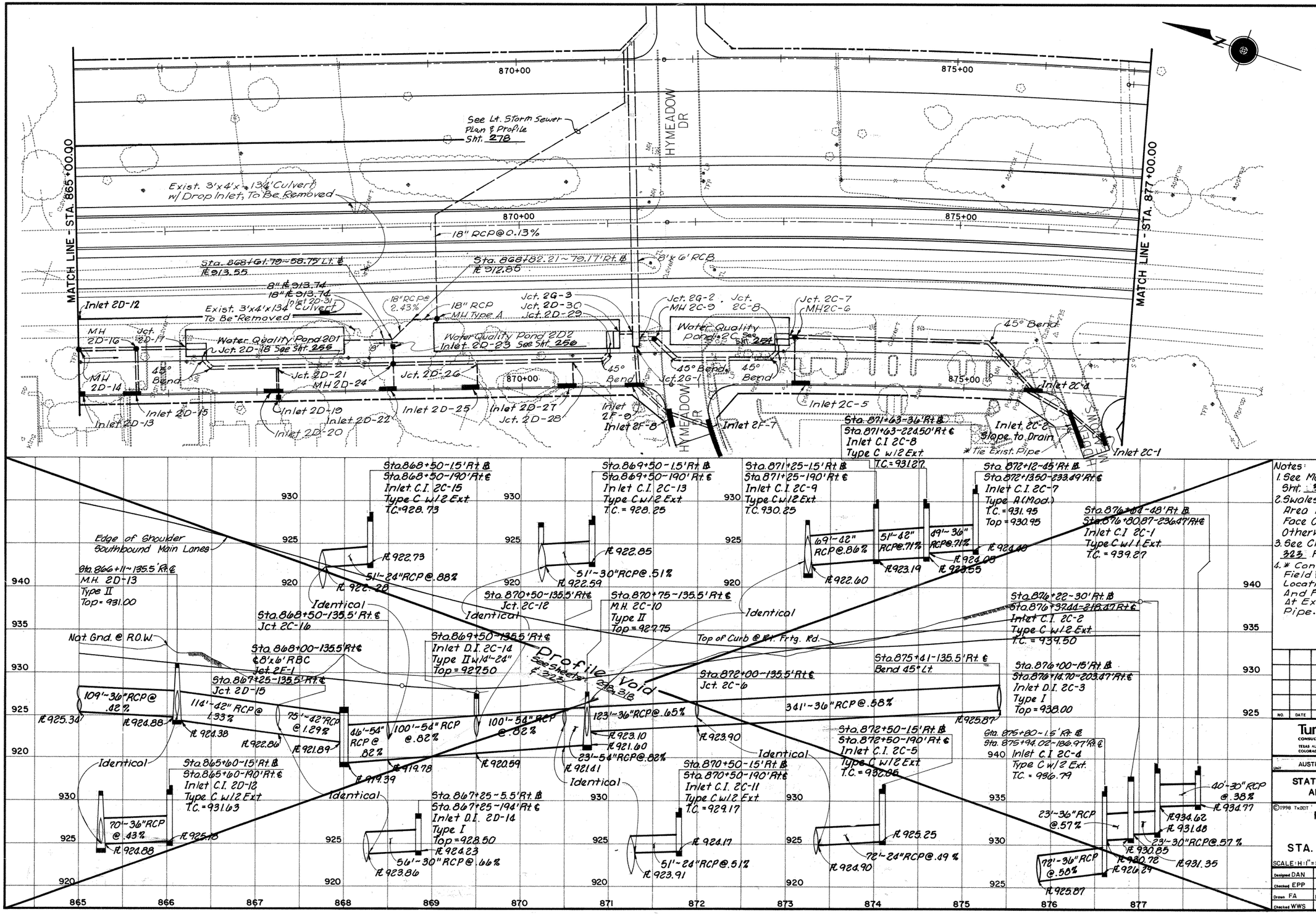

Notes:
1. See Main Lane Storm Sewer Profiles Sht: 316 For Main Lane Drainage.
2. Swales And Inlets In Separation Area Will Typically Be 6' Behind Face Of Curb Unless Dimensioned Otherwise.
3. See Cross Culvert Profiles Sht. 323 For Additional Information.
4. * Contractor Shall Field Verify Pipe Location, Size And Flow Line At Existing Pipe.

STATE OF TEXAS — Robert W. Barnett — 49537 — REGISTERED — PROFESSIONAL ENGINEER
Robert W. Barnett 5-09-88

NO.	DATE	REVISION	APPROVED

Turner Collie & Braden Inc.
CONSULTING ENGINEERS
TEXAS AUSTIN/DALLAS/HOUSTON/PORT ARTHUR
COLORADO DENVER

Unit	Job No.	Approved
AUSTIN	72-07401-022	

STATE DEPARTMENT OF HIGHWAYS AND PUBLIC TRANSPORTATION

©1998 TxDOT

RIGHT STORM SEWER PLAN & PROFILE
STA. 865+00 TO STA. 877+00

SCALE: H:1"=50' V:1"=5'

Designed	Fed. Rd. Div. No.	State	Federal Aid Project No.	Highway No.
Checked EPP	6	TEXAS	NH 99(556)	U.S. 183
Drawn FA	State Dist. No.	County	Control No. / Section No. / Job No.	Sheet No.
Checked WWS	14	WILLIAMSON	151 / 05 / 072	297

EDGE OF SHOULDER SOUTHBOUND MAIN LANES.

STA. 865+65.75 – 53' LT. BL.
STA. 865+65.75 135.5'RT.CL.
MH 2D-16
TYPE A
TOP 933.0

STA. 865+00 – 53' LT. BL.
STA. 865+00 – 135.5' RT. CL
MH 2D-14
TYPE A
TOP = 932.8

STA. 866+48.58 – 30.5' LT. BL.
STA. 866+48.58 – 158' R. CL.
45° BEND

STA. 866+43.33 – 43.75' LT. BL.
STA. 866+43.33 – 144.75' RT. CL
BEGIN 48" RCP.
JCT. 2D-18
END SPLITTER BOX

STA. 866+24.75 – 53' LT. BL.
STA. 866+24.75 – 135.5' RT. CL.
JCT. 2D-17
END 42" RCP
BEGIN SPLITTER BOX

STA. 867+25 – 30.5' LT. BL.
STA. 867+25 – 158' RT. CL.
JCT. 2D-21

STA. 868+55.75 – 30.5' LT. CL.
STA. 868+55.75 – 158' RT. CL.
MH 2D-24
TYPE A
TOP 928.93

STA. 870+55.75 – 30.5' LT. BL.
STA. 870+55.75 – 158' RT. CL.
JCT. 2D-28

STA. 869+50 – 30.5' LT. BL.
STA. 869+50 – 158' RT. CL.
JCT. 2D-26

STA. 871+25.67 – 62' LT. BL.
STA. 871+25.67 – 126.5' RT. CL
JCT. 2C-3

STA. 871+09 – 62' LT. BL.
STA. 871+09 – 126.5' RT. CL
BEGIN 54" RCP
JCT. 2D-30
END SPLITTER BOX

STA. 870+99.71 – 43.71' LT. BL.
STA. 870+99.71 – 144.79 RT. CL
END 54" RCP
JCT. 2D-29
BEGING SPLITTER BOX

STA. 870+94.50 – 30.5' LT. BL.
STA. 870+94.50 – 158' RT. CL.
45° BEND

STA. 871+33.67 – 53' LT. BL.
STA. 871+33.67 – 135.5' RT. CL.
JCT. 2C-2

STA. 871+49.67 – 53' LT. BL.
STA. 871+49.67 – 135.5' RT. CL.
MH 2C-9
TYPE A
TOP 929.5

STA. 871+72.15 – 30.5 LT. BL.
STA. 871+72.29 – 158' RT. CL.
45° BEND

STA. 872+82.48 – 30.48 LT. BL.
STA. 872+86.37 – 158' RT. CL.
45° BEND

STA. 872+88.76 – 44.75' LT. BL.
STA. 872+92.87 – 143.74' RT. CL
BEGIN 36" RCP
JCT. 2C-8
END SPLITTER BOX

STA. 873+01.33 – 52.98' LT. BL.
STA. 873+05.86 – 135.5' RT. CL
END 36" RCP
JCT. 2C+7
BEGIN SPLITTER BOX

STA. 873+09.26 – 52.98' LT. BL.
STA. 873+14.05 – 135.5' RT. CL
MH 2C-5
TYPE A
TOP 931.0

STA. 875+22.92 – 52.47' LT. BL.
STA. 875+35.01 – 135.5' RT. CL
45° BEND

STA. 875+80 – 1.5' RT. BL.
STA. 875+94.02 – 189.97' RT. CL.
INLET C.I. 2C-4
TYPE II R (20').
T.C. 936.76

STA. 876+27.79 – 41.75' RT. BL.
STA. 876+43.43 – 230.22' RT. CL.
INLET C.I. 2C-2
TYPE II R (40')
T.C. 938.2

STA. 876+63.45 – 48.37' RT. BL.
STA. 876+80.31 – 236.83' RT. CL.
INLET C.I. 2C-1
TYPE II R (10')
T.C. 938.6

NAT. GND. @ R.O.W.

TOP OF CURB @ RIGHT FRONTAGE ROAD.

60'–36" RCP @ 1.00%
FL 925.17
FL 924.51
FL 921.53

56' – 42" RCP @ 0.68%
FL 921.13
FL 920.63
SPLITTER BOX

92' – 48" RCP @ 0.56%
FL 920.53
FL 921.51
FL 920.01

128' – 48" RCP @ 0.56%
FL 919.28
FL 918.78

90' – 54" RCP @ 0.76%
FL 920.57
FL 918.07

106' – 54" RCP @ 0.76%
FL 920.26
FL 917.26

54' – 54" RCP @ 0.76%
FL 916.85
FL 916.71

17' – 54" RCP @ 0.76%
FL 916.58

8'x 6' RCB
FL 916.13 (@ STA. 871+33.67 CL)
FL 916.09 (@ STA. 871+25.67 CL)

157' – 36" RCP @ 0.61%
FL 923.82
SPLITTER BOX
FL 922.84

6' – 36" RCP @ 0.63%
FL 923.90
FL 918.89

14' – 36" RCP @ 0.63%
FL 923.95
FL 918.79

213' – 36" RCP @ 0.60%
FL 924.51

73' – 36" RCP @ 0.60%
FL 925.81
FL 926.26

44' – 18" RCP @ 1.25%
FL 934.10
FL 933.50

52' – 36" RCP @ 0.57%
FL 931.30
FL 930.98

12" WL
FL 926.7

INDENTICAL

STA. 865+60 – 1.5' RT. BL.
STA. 865+60 – 190' RT. CL.
INLET C.I. 2D-15
TYPE II R (20')
T.C. 931.63

STA. 867+19.25 – 1.5' RT. BL.
STA. 867+19.25 – 190' RT. CL.
INLET C.I. 2D-20
TYPE II R (20')
T.C. 930.00

STA. 867+25 – 5.5' RT. BL.
STA. 867+25 – 194' RT. CL.
INLET D.I. 2D-19
TYPE I
TOP = 928.50

STA. 869+44.25 – 1.5' RT. BL.
STA. 869+44.25 – 190' RT. CL.
INLET C.I. 2D-25
TYPE II R (20')
T.C. 928.20

STA. 873+09.26 – 27.4' LT. BL.
MH 2C-6

STA. 873+15 – 1.5' RT. BL.
STA. 873+20 – 189.98' RT. CL.
INLET C.I. 2C-5
TYPE II R (20')
T.C. 932.95

STA. 871+29.67 – 143.5' RT. CL.
JCT. 2G-1
SEE SHEET ___ FOR TIE INTO 6'X6' RCB.

STA. 871+25 – 1.5' RT. BL.
STA. 871+25 – 190' RT. CL.
INLET C.I. 2F-9
TYPE II R (20')
T.C. 930.21

STA. 871+65.08 – 38.52' RT. BL.
STA. 871+65.08 – 227.02' RT. CL.
INLET C.I. 2F-8
TYPE II R (30')
T.C. 931.5

STA. 872+16.85 – 62.34' RT. BL.
STA. 872+18.53 – 250.83' RT. CL.
INLET C.I. 2F-7
TYPE II R (40')
T.C. 932.2

FL 925.01
FL 925.23
48' – 24" RCP @ 0.42%
FL 921.53

FL 924.00
FL 924.23
FL 924.20
2^30" RCP @ 0.60%
FL 921.51
12" WL
FL 920.8
29' – 30" RCP @ 8.03%

STA. 868+50 – 1.5' RT. BL.
STA. 868+50 – 190' RT. CL.
INLET C.I. 2D-22
TYPE II R (20')
T.C. 928.73

STA. 868+55.75 – 138.5' RT. CL.
INLET D.I. 2D-23
TYPE I
TOP 927.5

16' – 24" RCP @ 1.40%
FL 922.25
FL 921.97

26' – 18" RCP @ 0.84%
FL 922.73
FL 922.47

FL 921.70
29' – 24" RCP @ 3.65%
FL 920.57

STA. 870+55.75 – 30' LT. BL.
JCT. 2D-28

STA. 870+50 – 1.5' RT. BL.
STA. 870+50 – 190' RT. CL.
INLET C.I. 2D-27
TYPE II R (20')
T.C. 929.17

FL 923.17
29' – 18" RCP @ 9.39%
FL 920.26
FL 917.26

51' – 24" RCP @ 0.83%
FL 925.45
FL 925.01

8'x 6' RCB
FL 916.16

44' – 36" RCP @ 0.72%
FL 924.40
FL 924.06

45' – 42" RCP @ 0.71%
FL 923.55
12" WL
FL 920.2

43' – 42" RCP @ 6.51%
FL 923.20
FL 921.21
FL 918.28

STA. 865+00 TO 877+00
FOR PLAN SEE SHEET 297

865 866 867 868 869 870 871 872 873 874 875 876 877

DATE: 04-01-99
JOB No.: 72-07401-022
PATH: K:\ 07401022\drainage\pro865r.dgn

STATE OF TEXAS
REBECCA A BILLS
82587
REGISTERED PROFESSIONAL ENGINEER
Rebecca A. Bills
5-3-99

Turner Collie & Braden Inc.
ENGINEERS • PLANNERS • PROJECT MANAGERS

AUSTIN | Job No. 72-07401-022 | File

Texas Department of Transportation

©1998 TxDOT

US 183
RIGHT STORM SEWER
PROFILES

SCALE: H:1"=50', V:1"=5'

Designed	KKY	FED. RD. DIV. NO.	STATE	FEDERAL AID PROJECT NO.					HIGHWAY NO.
Checked	DLG	6	TEXAS	NH 99(556)					U.S.183
Drawn	JAM	STATE DIST. NO.	COUNTY	CONTROL NO.	SECTION NO.	JOB NO.			SHEET NO.
Checked	DLG	14	WILLIAMSON	0151	05	072			298

	ITEM 100	ITEM 110	ITEM 110	ITEM 132	ITEM 132	ITEM 160	ITEM 160	ITEM 164	ITEM 164	ITEM 164	ITEM 168	ITEM 169	ITEM 169	ITEM 247	ITEM 310	ITEM 400	ITEM 400	ITEM 402	ITEM 421	ITEM 423	ITEM 432	ITEM 450	ITEM 450	ITEM 460	ITEM 462	ITEM 462	ITEM 462
	Prep. R.O.W.	EXCAV (CHANNEL)	EXCAV (POND)	EMBANK (TY B)	EMBANK (DC) (TY C) MOD	Furn & Plac Tpsl (Cl 2) (4in)	Furn & Plac Tpsl (Cl 2) (6in)	Cell Fib Mulch Seed	Drill Seed (Temp) (Warm)	Drill Seed (Perm) (Urban) (Clay)	Vegetative Watering	SOIL RET BLNKT (CL1) (TY A)	SOIL RET BLNKT (CL2)(TY G)	Fl Bs (TyD Gr6 Cl 2) (Comp In Plac)	Apsh Mat (MC-30)	Struct Excav (Sewer)	Struct Excav (Culv Large)	TRENCH EXCAV PROTECT	CL C Conc. (misc.)	Pond Wall (Cast-In-Place)	RIPRAP (CONC.) (CL B)	Rail (TY PR)	Rail (TY C4) (S)	CMP (Gal Stl 12in)	Conc Box Culv (2'x4')	Conc Box Culv (4'x4')	Conc Box Culv (6'x4')
	AC	CY	CY	CY	CY	SY	SY	SY	SY	SY	MG	SY	SY	TONS	GAL	CY	CY	LF	CY	SF	CY	LF	LF	LF	LF	LF	LF
620 Median Pond	–	–	7313	–	892	–	2144	–	1072	2144	54	–	–	–	–	4130	–	2165	81.3	9811	5.1	–	1055	35	–	–	468
LakeCreek Pond 1A	–	–	(2053)	–	–	–	–	–	–	–	–	–	–	–	–	107	–	95	–	–	–	–	–	6	–	–	–
LakeCreek Pond 1B	–	–	(1908)	–	–	–	–	–	–	–	–	–	–	–	–	42	–	54	–	–	–	–	–	6	–	–	–
LakeCreek Pond 1C	–	–	(1657)	–	–	–	–	–	–	–	–	–	–	–	–	7	–	10	–	–	–	–	–	6	–	–	–
Hymeadow Pond 2A	–	–	(3048)	–	–	–	–	–	–	–	–	–	–	–	–	115	–	62	–	–	–	–	–	6	–	–	–
Hymeadow Pond 2B	–	–	(1529)	–	–	–	–	–	–	–	–	–	–	–	–	2	–	7	–	–	–	–	–	6	–	–	–
Hymeadow Pond 2C	–	–	(2260)	–	–	–	–	–	–	–	–	–	–	–	–	50	–	34	–	–	–	–	–	6	–	–	–
Hymeadow Pond 2D1	–	–	(3286)	–	–	–	–	–	–	–	–	–	–	–	–	212	–	124	–	–	–	–	–	6	–	–	–
Hymeadow Pond 2D2	–	–	(4381)	–	–	–	–	–	–	–	–	–	–	–	–	1893	–	735	–	–	–	–	–	6	–	–	–
Pond Springs Pond	1.04	93	5300	–	441	–	5056	–	2420	4840	121	1403	–	45	–	1656	–	336	57.8	5002	78	–	–	13	–	44	–
Pond Springs Detention Pond	1.15	1162	22610	308	–	1459	2780	–	3391	6782	279	363	2186	141	50	2056	756	1135	–	24431	280	120	140	0	–	–	–
Woods Pond	7.1	2640	64420	1202	8970	–	34364	437	18275	36550	859	6500	6500	275	–	2016	–	649	–	–	166.5	–	–	75	152	–	–
TOTAL	9.29	3895	99643	1510	10303	1459	44,344	437	25158	50316	1313	8266	8686	461	50	12286	756	5406	139.1	39244	529.6	120	1195	171	152	44	468

	ITEM 462	ITEM 462	ITEM 462	ITEM 462	ITEM 462	ITEM 462	ITEM 464	ITEM 464	ITEM 464	ITEM 464	ITEM 465	ITEM 465	ITEM 465	ITEM 465	ITEM 466	ITEM 466	ITEM 466	ITEM 466	ITEM 466	ITEM 466	ITEM 466	ITEM 467	ITEM 481	ITEM 481	ITEM 481	ITEM 481	ITEM 529	ITEM 530
	Conc Box Culv (4'x4')	Conc Box Culv (6'x4')	Conc Box Culv (6'x5')	Conc Box Culv (7'x4')	Conc Box Culv (8'x4')	Conc Box Culv (8'x6')	RCP SEW (D-LOAD) (18")	RCP SEW (D-LOAD) (24")	RCP SEW (D-LOAD) (36")	RCP SEW (D-LOAD) (48")	MAN H (COMPL) TY A	INLET (COMPL) (DROP) (TY I)	INLET (COMPL) (DROP) (TY IB)	INLET (COMPL) (DROP) (TY II)	CULV HDWLL TY PW-45	CULV HDWLL TY MCW-P-15 MOD	CULV HDWLL TY MCW-P-30 MOD	CULV HDWLL TY MCW-P-45 MOD	CULV HDWLL TY MCW-F1-30	CULV HDWLL TY FW-N	CULV HDWLL TY FW-45	S.E.T. TYII	* P.V.C. PIPE (SCH 40) 4"	* P.V.C. PIPE (SCH 40) 6"	* P.V.C. PIPE (SCH 40) 8"	* P.V.C. PIPE (SCH 40) 12"	* CONC. CURB (TY II) (6 IN)	CONC. DRVWY
	LF	LF	LF	LF	LF	LF	LF	LF	LF	LF	EA	EA	EA	EA	EA	EA	EA	EA	EA	EA	EA	EA	LF	LF	LF	LF	LF	SY
620 Median Pond	–	468	–	–	–	–	1487	–	–	210	–	–	–	–	–	–	–	–	–	–	–	1	324	–	77	–	–	21
LakeCreek Pond 1A	–	–	–	–	–	–	–	–	–	–	–	–	–	–	–	–	–	–	–	–	–	–	144	25	100	–	–	–
LakeCreek Pond 1B	–	–	–	–	–	–	–	–	–	–	–	–	–	–	–	–	–	–	–	–	–	–	114	24	58	–	–	–
LakeCreek Pond 1C	–	–	–	–	–	–	–	–	–	–	–	–	–	–	–	–	–	–	–	–	–	–	120	25	14	–	–	–
Hymeadow Pond 2A	–	–	–	–	–	–	6	–	–	–	1	–	–	–	–	–	–	–	–	–	–	–	138	25	65	–	–	–
Hymeadow Pond 2B	–	–	–	–	–	–	–	–	–	–	–	–	–	–	–	–	–	–	–	–	–	–	63	25	11	–	–	–
Hymeadow Pond 2C	–	–	–	–	–	–	–	–	–	–	–	–	–	–	–	–	–	–	–	–	–	–	156	25	38	–	–	–
Hymeadow Pond 2D1	–	–	–	–	–	–	70	–	–	–	–	–	–	–	–	–	–	–	–	–	–	–	288	25	54	–	–	–
Hymeadow Pond 2D2	–	–	–	–	–	–	735	–	–	–	1	–	–	–	–	–	–	–	–	–	–	–	252	27	5	–	–	–
Pond Springs Pond	44	–	–	–	–	–	–	–	–	–	–	–	–	–	–	–	–	–	–	–	–	–	704	–	357	–	–	42
Pond Springs Detention Pond	–	–	96	–	81	84	–	136	287	563	2	3	1	3	–	2	2	–	–	1	–	–	–	–	–	–	90	30
Woods Pond	–	–	30	175	333	28	66	–	–	–	–	2	–	–	1	–	–	1	1	–	1	6	–	–	–	75	–	37
TOTAL	44	468	126	175	414	112	2364	136	287	773	4	5	1	3	1	2	2	1	1	1	1	7	2303	201	779	75	90	130

	ITEM 531	ITEM 550	ITEM 550	ITEM 550	ITEM 3116	ITEM 3116	ITEM 3116	ITEM 5014	ITEM 5014	ITEM 5014	ITEM 8608
	CONC. WALKWAY (5 IN)	CHAIN LINK FENCE (6FT)	VEH. GATE (DOUBLE) (12FT)	VEH. GATE (DOUBLE) (20FT)	ASPH CONC (TY C) (SURF) (PV 32 MIN)	ASPH CONC. (TY C) 2"	ASPH CONC. (TY C) 1½"	GABIONS (3'X1') (GALV)	GABIONS (3'X3') (GALV)	GABIONS (6'X0.5') (GALV)	SAND FILTER SYSTEM
	SY	LF	EA	EA	TONS	TONS	TONS	CY	CY	CY	EA
620 Median Pond	–	–	–	2	–	–	–	–	20	6.7	1 (60'X64')
LakeCreek Pond 1A	–	–	–	–	–	–	–	6.6	10	–	1 (29'X30')
LakeCreek Pond 1B	–	–	–	–	–	–	–	6.6	10	–	1 (24'X30')
LakeCreek Pond 1C	–	–	–	–	–	–	–	6.6	10	–	1 (25'X30')
Hymeadow Pond 2A	–	–	–	–	–	–	–	6.6	10	–	1 (28'X30')
Hymeadow Pond 2B	–	–	–	–	–	–	–	6.6	10	–	1 (15'X30')
Hymeadow Pond 2C	–	–	–	–	–	–	–	6.6	10	–	1 (29'X30')
Hymeadow Pond 2D1	–	–	–	–	–	–	–	6.6	10	–	1 (30'X37')
Hymeadow Pond 2D2	–	–	–	–	–	–	–	6.6	10	–	1 (30'X47')
Pond Springs Pond	–	1050	2	–	–	8.3	–	–	38	10.3	1 (40'X93')
Pond Springs Detention Pond	46	2060	1	–	12	4.1	7.7	–	–	–	–
Woods Pond	–	2010	1	–	–	56.2	–	–	–	–	–
TOTAL	46	5120	4	2	12	68.6	7.7	52.8	138	17.0	10

NOTES:

( ) INCIDENTAL. FOR CONTRACTOR'S INFORMATION ONLY.

* SUBSIDIARY TO VARIOUS BID ITEMS.

Turner Collie & Braden Inc.
ENGINEERS • PLANNERS • PROJECT MANAGERS

AUSTIN | Job No. 61-99100-012 | File

©1998 TxDOT

US 183
WATER QUALITY AND DETENTION POND SUMMARY SHEET

SCALE: AS NOTED

Designed	FED. RD. DIV. NO.	STATE	FEDERAL AID PROJECT NO.		HIGHWAY NO.
KKY	6	TEXAS	NH 09(556)		US 183
Drawn	STATE DIST. NO.	COUNTY	CONTROL NO.	SECTION NO.	JOB NO.	SHEET NO.
JAM	AUS	WILLIAMSON	0151	05	072	48
Checked						
DLG						

DATE: 04/10/99
JOB No.: 72-07401-022
PATH: t:\ 07401022\drainage\wqptbl2.dgn

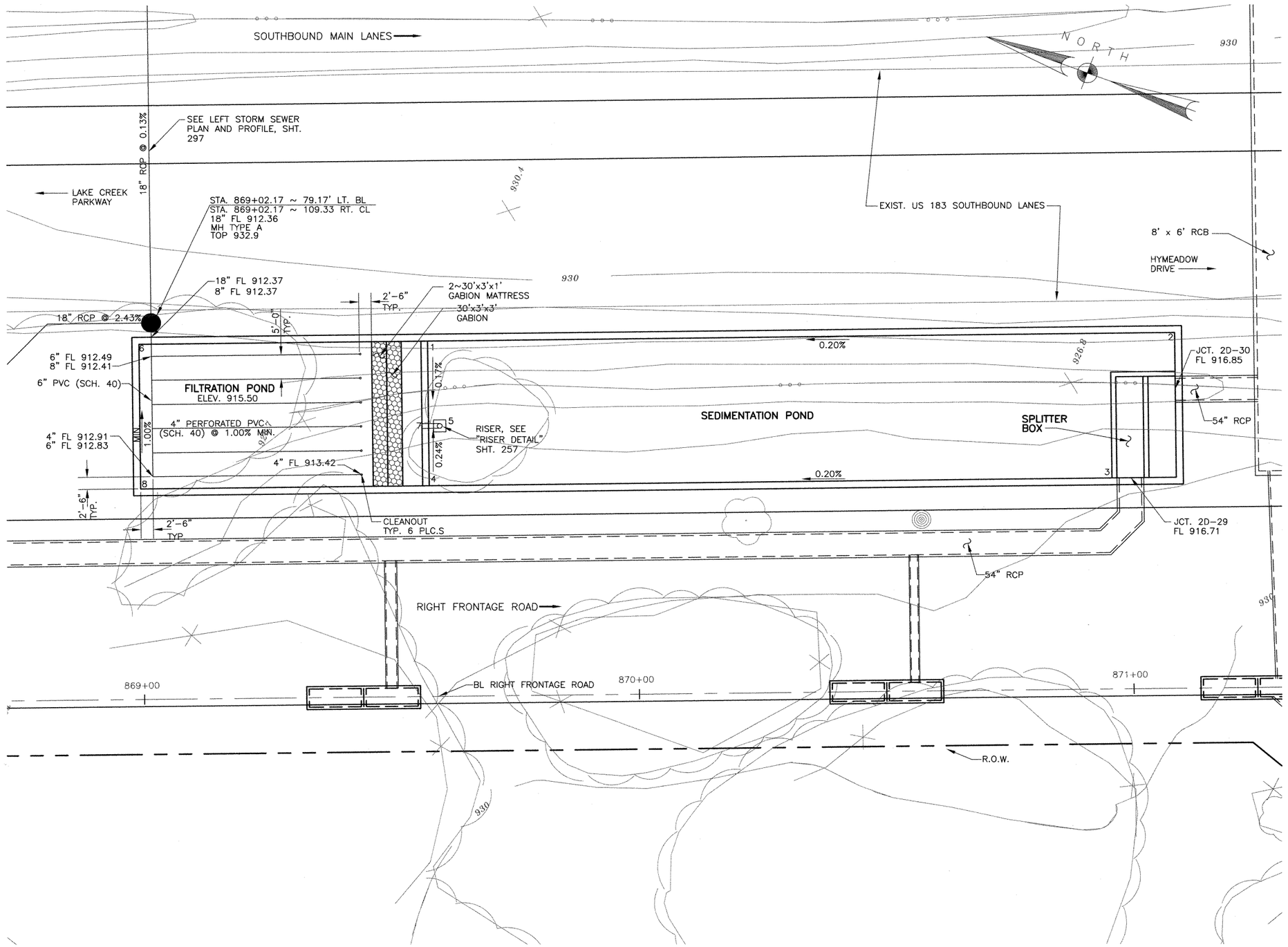

POINT LOCATION TABLE

POINT No.	STATION BL RT. FRT. RD.	OFFSET	ELEV. FL
1	869+58.00	73.75' LT.	915.55
2	871+09.01	73.75' LT.	915.85
3	870+96.00	43.75' LT.	915.82
4	869+58.00	43.75' LT.	915.55
5	869+60.25	56.17' LT.	915.52
6	868+99.67	73.75' LT.	915.50
7	869+46.67	56.17' LT.	915.50
8	868+99.67	43.75' LT.	915.50

NOTE:
FOR CURRENT INFORMATION ABOUT GRAVITY & FORCE MAINS IN REFERENCE TO CHANGE ORDER #10, CONTACT CITY OF AUSTIN WATER & WASTEWATER DEPT.

NOTES:

1. SEE WATER QUALITY POND STRUCTURAL DETAILS SHEETS 261a – 261d FOR POND DIMENSIONS AND REINFORCEMENT.
2. SEE STORM SEWER PROFILE SHEET 298 FOR FLOWLINES OF RCPs/RCBs AT SPLITTER BOX.
3. SEE WATER QUALITY POND TYPICAL SECTIONS AND DETAILS, SHEET 257 FOR FILTRATION POND DETAILS.

STATE OF TEXAS
REBECCA A. BILLS
82587
REGISTERED PROFESSIONAL ENGINEER
Rebecca A. Bills
5-3-99

Turner Collie & Braden Inc.
ENGINEERS • PLANNERS • PROJECT MANAGERS

AUSTIN (Unit) | 72-07401-022 (Job No.) | (File)

Texas Department of Transportation

© 1998 TxDOT

HYMEADOW (2D2)
WATER QUALITY POND LAYOUT

SCALE: 1"=10'

Designed	Checked	Drawn	Checked	FED. RD. DIV. NO.	STATE DIST. NO.	COUNTY	CONTROL NO.	SECTION NO.	JOB NO.	SHEET NO.
RAB	CDB	GWS	DLG	6	14	WILLIAMSON	0151	05	072	256

STATE	FEDERAL AID PROJECT NO.	HIGHWAY NO.
TEXAS	NH 99(556)	U.S.183

DATE: 04/28/99
JOB NO. T/72-07401-022/PONDS/HYMD202.dwg

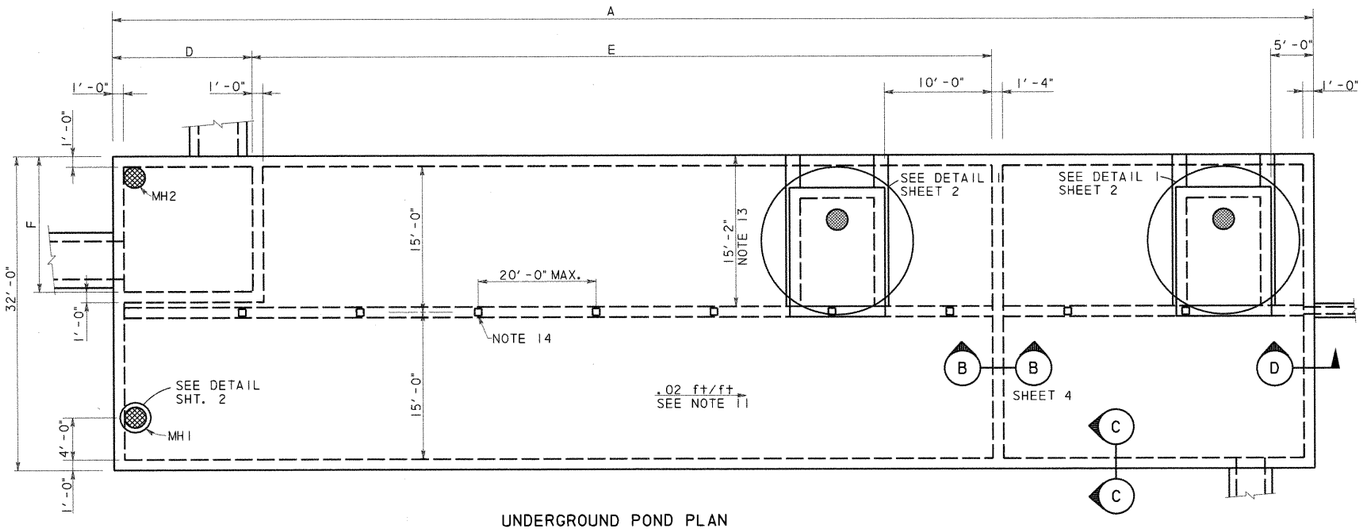

UNDERGROUND POND PLAN

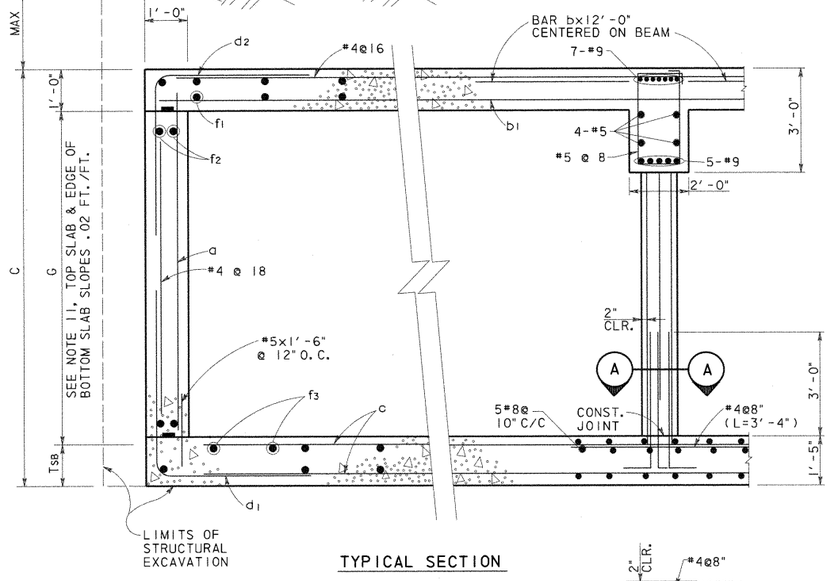

TYPICAL SECTION

SECTION C-C
N. T. S.

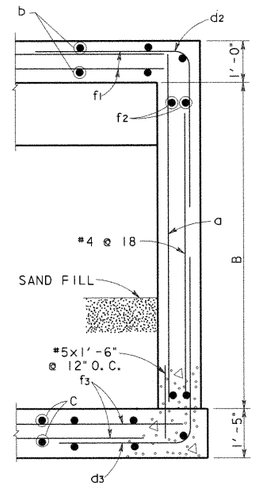

SECTION D-D
N. T. S.

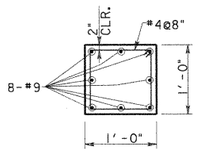

SECTION A-A
SCALE: 1"=1'-0"

UNDERGROUND POND REINFORCING TABLE																		
POND DESIGNATION	BARS a		BARS b		BARS b1		BARS c		BARS d1		BARS d2		BARS d3		BARS f1, f2, f3(#4)			
	SIZE	SPA.	SIZE	SPA.	SIZE	SPA.	SIZE	SPA.	SIZE	SPA.	SIZE	SPA.	SIZE	SPA.	f1 Spa.	f2 Spa.	f3 Spa.	
1A	#6	@12"	#8	@8"	#6	@8"	#8	@10"	#6	@6"	#6	@6"	#6	@6"	@6"	@12"	@7"	
1B	#6	@12"	#8	@8"	#6	@8"	#8	@10"	#6	@6"	#6	@6"	#6	@6"	@6"	@12"	@7"	
1C	#6	@12"	#8	@8"	#6	@8"	#8	@10"	#7	@6"	#6	@6"	#7	@6"	@6"	@12"	@7"	
2A	#6	@12"	#8	@8"	#6	@8"	#8	@10"	#6	@6"	#6	@6"	#6	@6"	@6"	@12"	@7"	
2B	#6	@12"	#8	@8"	#6	@8"	#8	@10"	#6	@6"	#6	@6"	#6	@6"	@6"	@12"	@7"	
2C	#7	@12"	#8	@8"	#6	@8"	#8	@10"	#7	@6"	#6	@6"	#8	@6"	@6"	@12"	@7"	
2D1	#7	@12"	#8	@8"	#6	@8"	#8	@10"	#7	@6"	#6	@6"	#8	@6"	@6"	@12"	@7"	
2D2	#7	@12"	#8	@8"	#6	@8"	#8	@10"	#7	@6"	#6	@6"	#8	@6"	@6"	@12"	@7"	

UNDERGROUND POND DIMENSION TABLE											
POND DESIGNATION	A	B	C	D	E	F	G			MAX FILL	AVERAGE FILL
1A	160'-4"	9'-2"	9'-3"	22'-0"	97'-0"	19'-0"	7'-0"			11'-0"	7'-6"
1B	128'-10"	9'-2"	9'-3"	15'-6"	77'-0"	11'-0"	7'-0"			8'-6"	5'-6"
1C	118'-10"	9'-8"	9'-9"	15'-6"	66'-0"	11'-0"	7'-6"			8'-3"	5'-6"
2A	147'-10"	9'-2"	9'-3"	15'-6"	92'-0"	11'-0"	7'-0"			9'-3"	6'-9"
2B	86'-10"	9'-2"	9'-3"	15'-6"	44'-0"	11'-0"	7'-0"			6'-9"	4'-9"
2C	133'-10"	10'-2"	10'-3"	15'-6"	77'-0"	11'-0"	8'-0"			4'-9"	3'-6"
2D1	181'-4"	10'-2"	10'-3"	22'-0"	110'-0"	13'-0"	8'-0"			11'-10"	7'-3"
2D2	211'-4"	10'-2"	10'-3"	13'-0"	139'-0"	22'-0"	8'-0"			9'-5"	7'-9"

GENERAL NOTES: UNDERGROUND PONDS

1. DESIGNED ACCORDING TO CURRENT AASHTO 1996 STANDARD SPECIFICATIONS.
2. DESIGNED FOR HS20 LOADING AND TO THE MAXIMUM FILL HEIGHT SHOWN.
3. ALL REINFORCING SHALL BE GRADE 60 KSI.
4. ALL CONCRETE SHALL BE CLASS "C".
5. REINFORCING BARS SHALL BE ADJUSTED TO PROVIDE A MINIMUM OF 1½" CLEAR COVER, UNLESS OTHERWISE NOTED.
6. ALL DIMENSIONS ARE IN FEET AND INCHES AND ALL MASS IS IN POUNDS UNLESS OTHERWISE NOTED.
7. SEE POND LAYOUT SHEETS FOR POND ORIENTATION AND LOCATION; PLUS THE ORIENTATION, SIZE AND LOCATION OF INCOMING AND OUTGOING DRAINAGE LINES.
8. WATERSTOPS SHALL BE HYDROPHILIC WATERSTOPS SUCH AS ADEKA MC-2010M.
9. PROVIDE 3" CLEARANCE WHERE CAST AGAINST SOIL.
10. PROVIDE CONSTRUCTION JOINTS IN WALLS AT A MAXIMUM SPACING OF 30 FOOT ON CENTER. MAXIMUM SLAB AREA TO BE PLACED WITHOUT CONSTRUCTION JOINTS IS 3000 SQUARE FEET. SLAB AND WALL CONSTRUCTION JOINTS SHALL ALIGN.
11. SEE POND LAYOUT FOR FLOWLINE. BOTTOM SLAB SHALL PROVIDE A .02 FT/FT SLOPE ALONG THE EDGE OF WALL. PERIMETER WALL HEIGHT (G) SHALL BE CONSTANT.
12. OFF SET RISER TO MISS ROOF SLAB BEAM.
13. AT UNDERGROUND PONDS 2C AND 2D2 THE ACCESS HATCH IS OPPOSITE HAND FROM WHAT IS SHOWN AND IS LOCATED FROM THE OPPOSITE WALL TO AVOID INTERFERENCE WITH THE DRAINAGE DITCH.
14. COLUMN SPACING IS 20.0 FT O.C. MAX. UNLESS NOTED OTHERWISE. THERE WILL BE NO COLUMNS WITHIN THE SPLITTER BOX, WHERE SPLITTER BOX EXTENDS TO THE ROOF BEAM OR BEYOND THE BEAM IS SUPPORTED BY THE SPLITTER BOX WALLS.
15. LAP TOP BARS @ MID SPAN AND BOTTOM BARS @ SUPPORTS.

ESTIMATED QUANTITIES*			
POND DESIGNATION	CONCRETE (CY)	REINFORCING BARS (LBS)	EXCAVATION (CY)
1A	623	144,925	
1B	505	115,855	
1C	476	109,213	
2A	572	131,682	
2B	356	82,752	
2C	536	123,427	
2D1	712	165,990	
2D2	823	191,615	

* QUANTITIES FOR CONTRACTOR'S ESTIMATE ONLY. ALL ITEMS ARE SUBSIDIERY TO THE POND ITEM.

STATE OF TEXAS
WILLY R. BURNS
44162
REGISTERED
ENGINEER
4/2/99

NO. DATE REVISION APPROVED

Turner Collie & Braden Inc.
Engineers • Planners • Project Managers

DATE SUTTON JOB NO. 62-14004-011 ADDENDUM

© 1998 Texas Department of Transportation

US 183

WATER QUALITY PONDS
STRUCTURAL DETAILS

SHEET 1 OF 11

Designed	WRB	FED. RD. DIV. NO.	STATE	FEDERAL AID PROJECT NO.				HIGHWAY NO.
Checked		6	TEXAS	NH99(556)				US 183
Drawn	MR	STATE DIST. NO.	COUNTY	CONTROL NO.	SECTION NO.	JOB NO.		SHEET NO.
Checked		14	WILLIAMSON	151	5	072		261a

UGPDTL1.DGN

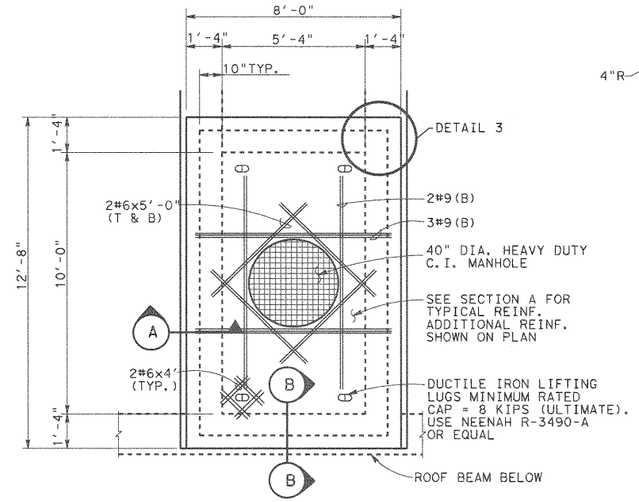

MAINTENANCE ACCESS HATCH

DETAIL 1

SCALE: 3/8" = 1'-0"

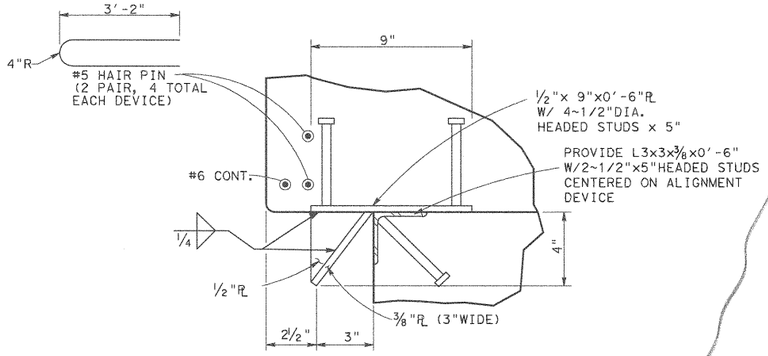

PROVIDE 8 DEVICES (GALV. AFTER FABRICATION) 2 EACH SIDE

DETAIL 2

ALIGNMENT DEVICE

SCALE: 3" = 1'-0"

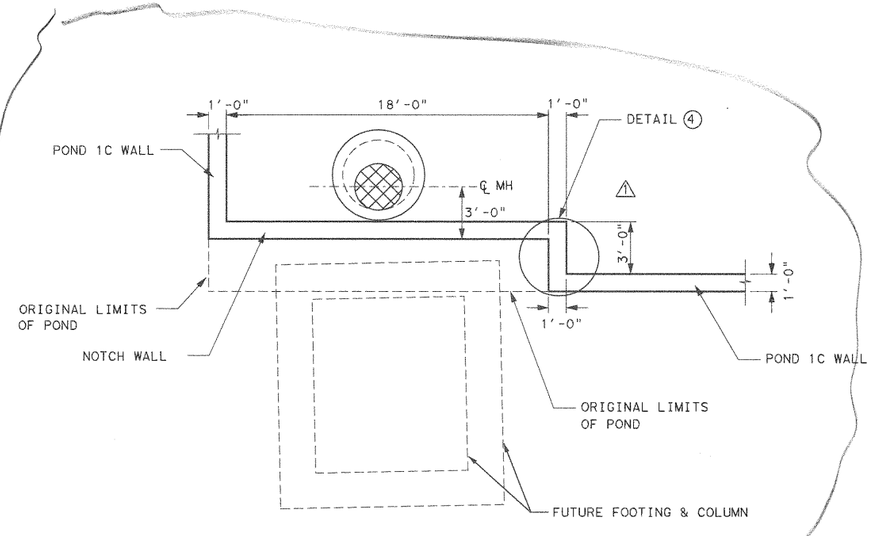

POND 1C MODIFICATION

SCALE: 3" = 1'-0"

SECTION A

SCALE: 1/2" = 1'-0"

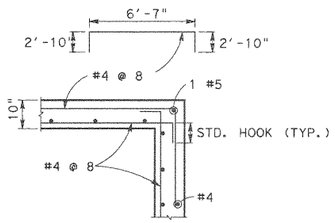

DETAIL 3

HORIZONTAL REINFORCEMENT

SCALE: 1/2" = 1'-0"

ACCESS HATCH		
POND	H1 (±)	ELEV. A
1A	8'-8"	929.20
1B	6'-7"	931.98
1C	6'-7"	931.62
2A	8'-4"	932.04
2B	5'-10"	932.20
2C	4'-10"	933.06
2D1	7'-4"	934.04
2D2	7'-11"	932.50

MANHOLE TABLE		
POND	H2	H3
1A	9'-0"	5'-0"
1B	9'-0"	4'-0"
1C	8'-0"	4'-0"
2A	9'-0"	4'-0"
2B	7'-0"	4'-0"
2C	3'-0"	5'-0"
2D1	10'-0"	4'-0"
2D2	7'-0"	5'-0"

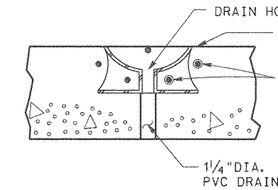

SECTION B

SCALE: 1"= 1'-0"

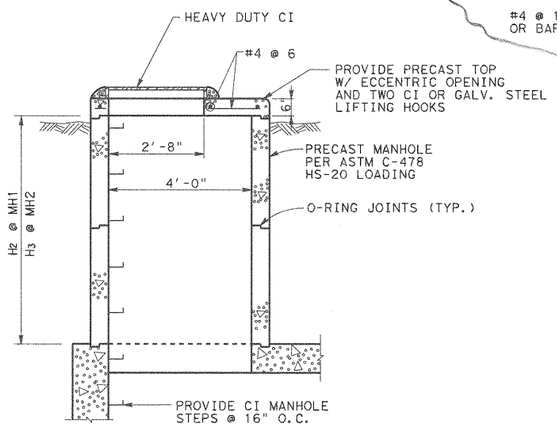

MANHOLE DETAIL

SCALE: 1/2" = 1'-0"

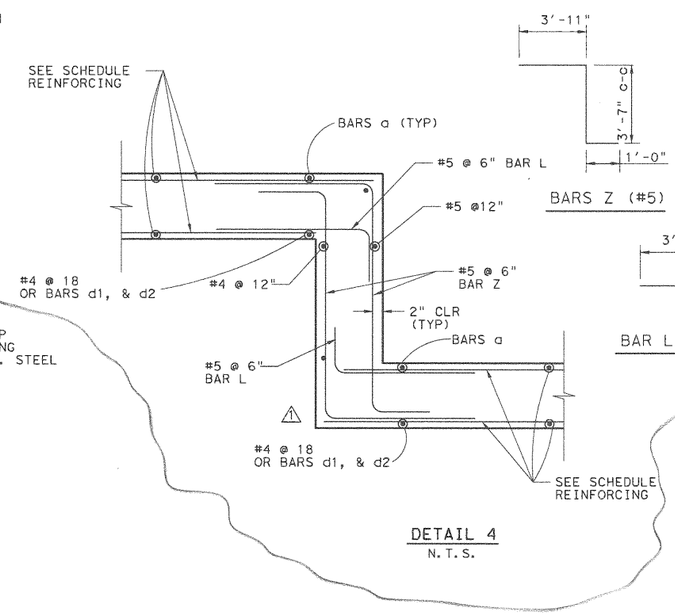

DETAIL 4

N.T.S.

STATE OF TEXAS
WALLY R. BURNS
44162
REGISTERED PROFESSIONAL ENGINEER
Wally R Burns
01/29/01

1	JAN. 26 01	ADD NOTCH	WRB
NO.	DATE	REVISION	APPROVED

Turner Collie & Braden Inc.
Engineers • Planners • Project Managers

TRANSPORTATION | Unit | Job No. 81-07401-024 | Approved

© 1998 Texas Department of Transportation

US 183
WATER QUALITY PONDS
STRUCTURAL DETAILS

SCALE: AS NOTED — SHEET 2 OF 11

Designed	Checked	Drawn	Checked	FED. RD. DIV. NO.	STATE	FEDERAL AID PROJECT NO.				HIGHWAY NO.
WRB		MR		6	TEXAS	NH99(556)				US 183
				STATE DIST. NO.	COUNTY	CONTROL NO.	SECTION NO.	JOB NO.		SHEET NO.
				14	WILLIAMSON	151	5	072		261b

UGPDT2.DGN

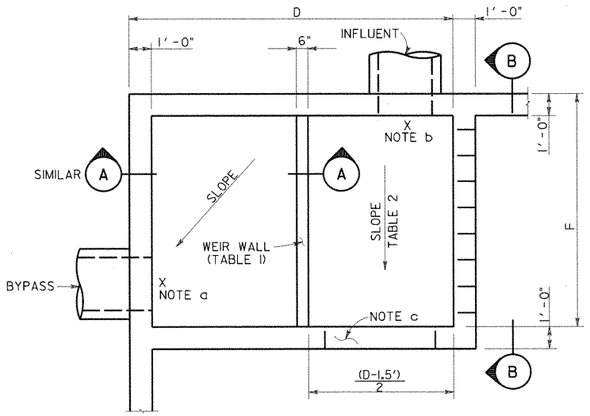

SEE TABLE SHEET I OF II
FOR DIMENSIONS D & F

SPLITTER BOX PLAN (POND 2D2)

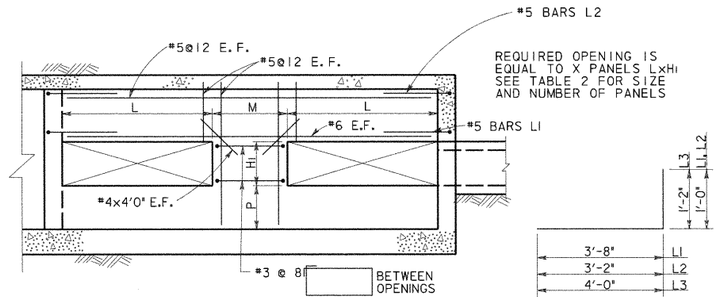

SECTION B

BARS L

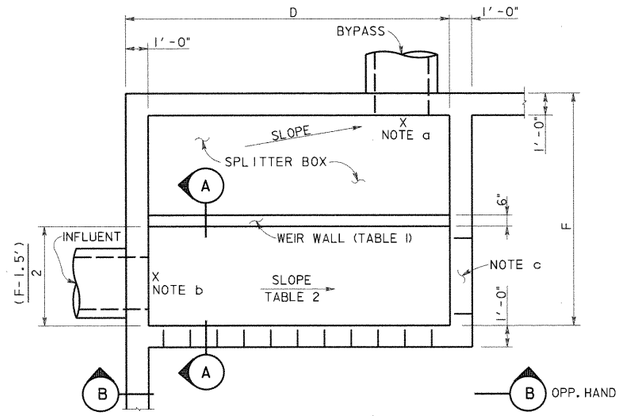

SEE TABLE SHEET I OF II
FOR DIMENSIONS D & F

SPLITTER BOX PLAN (TYPICAL)

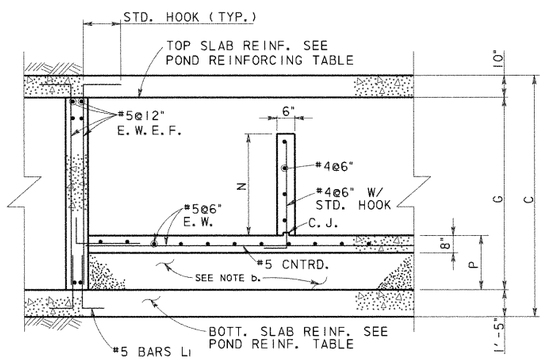

SECTION A

TABLE I BYPASS OUTFALL				
POND	BYPASS LINE ELEVATION	BYPASS WEIR		
		TOP OF WALL ELEV.	N*	P
1A	914.23	917.78	3'-6"	1'-6"
1B	918.44	921.00	2'-6"	2'-6"
1C	918.39	922.75	4'-3"	1'-9"
2A	917.38	920.92	3'-6"	1'-6"
2B	921.92	923.49	1'-6"	3'-6"
2C	923.82	925.90	2'-0"	4'-6"
2D1	920.53	923.63	3'-0"	2'-6"
2D2	916.71	921.85	5'-0"	1'-0"

*N IS MINIMUM DIMENSION, SPLITTER BOX FLOOR SLOPES, HOLD TOP OF WEIR WALL CONSTANT.

TABLE 2 INFLUENT LINE						
POND	INFLUENT ELEV.	SLOPE %	INFLUENT WALL			
			OPENINGS X	M	L	HI
1A	914.28	0.29	4	3'-0"	3'-0"	2'-6"
1B	918.50	0.48	3	2'-9"	3'-0"	1'-6"
1C	918.50	0.85	3	2'-9"	3'-0"	1'-6"
2A	917.42	0.33	3	2'-9"	3'-0"	1'-6"
2B	921.99	0.54	1	0	14'-8"	0'-9"
2C	923.90	0.62	3	2'-9"	3'-0"	1'-0"
2D1	920.63	0.53	3	6'-0"	3'-0"	2'-0"
2D2	916.85	0.78	4	3'-8"	2'-6"	2'-0"

NOTES:

a. SEE TABLE I THIS SHEET FOR OUT FLOW ELEVATION. SLOPE SLAB FROM OVERFLOW WEIR TO OUTFALL.

b. SEE TABLE 2 FOR INFLUENT ELEVATION. TOP OF SPLITTER BOX SLAB TO MATCH INFLOW ELEVATION. AT POND 2D1 THE ELEVATION SHOWN REPRESENTS A 6" DROP FROM THE INFLUENT FLOWLINE. CONTRACTOR MAY USE CEMENT STABILIZED SAND UNDER THE SLAB OR PLACE CONCRETE FOR THE FILL.

c. PROVIDE 3'x .75' OPENING AT BOTTOM OF SPLITTER BOX WALL AT END OF CHANNEL.

STATE OF TEXAS
WILLY R. BURNS
54103
REGISTERED
PROFESSIONAL ENGINEER
4/28/99

NO.	DATE	REVISION	APPROVED

Turner Collie & Braden Inc.
Engineers • Planners • Project Managers

SUTTON — Job No. 62-14004-011

© 1998 Texas Department of Transportation

US 183
WATER QUALITY PONDS
STRUCTURAL DETAILS

SCALE: AS NOTED — SHEET 3 OF 11

Designed	WRB	FED. RD. DIV. NO.	STATE	FEDERAL AID PROJECT NO.				HIGHWAY NO.
Checked		6	TEXAS	NH99(556)				US 183
Drawn	MR	STATE DIST. NO.	COUNTY	CONTROL NO.	SECTION NO.	JOB NO.		SHEET NO.
Checked		14	WILLIAMSON	151	5	072		261c

UGPDT3.DGN

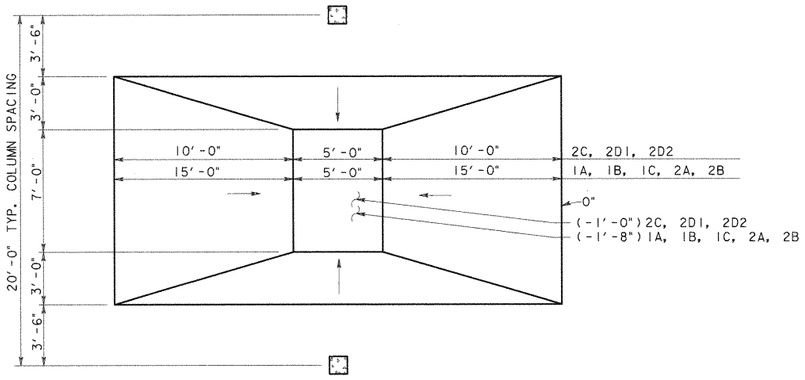

PLAN

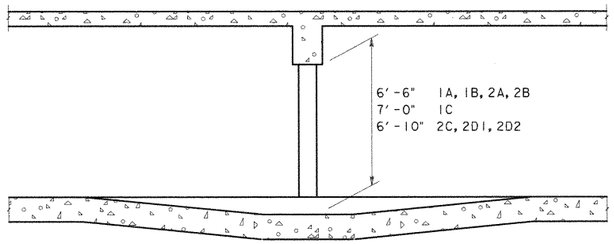

SECTION

REINFORCING LAP SPLICE & EMBEDMENT SCHEDULE						
BAR SIZE	MIN LAP LENGTH		MIN EMBEDMENT LENGTH			
	TOP BARS	OTHER BARS	TOP BARS		OTHER BARS	
			STR.	STD. HOOK	STR.	STD. HOOK
4	24"	20"	17"	9"	12"	7"
5	30"	24"	21"	10"	15"	8"
6	36"	28"	25"	10"	18"	8"
8	58"	41"	42"	15"	30"	12"

PROVIDE ONE CROSS OVER DETAIL FOR E ≤ 80'
PROVIDE TWO CROSS OVER DETAILS FOR E > 80'

CROSS OVER DETAIL
SCALE: 1/4" = 1'-0"

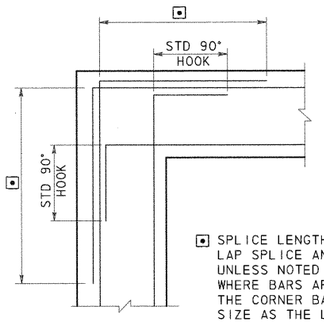

⊡ SPLICE LENGTH SEE REINFORCING LAP SPLICE AND EMBEDMENT TABLES. UNLESS NOTED OTHERWISE ON DWGS WHERE BARS ARE DIFFERENT SIZE THE CORNER BAR SHALL BE SAME SIZE AS THE LARGER BAR

CORNER REINFORCING
FOR WALLS OR GRADE BEAMS

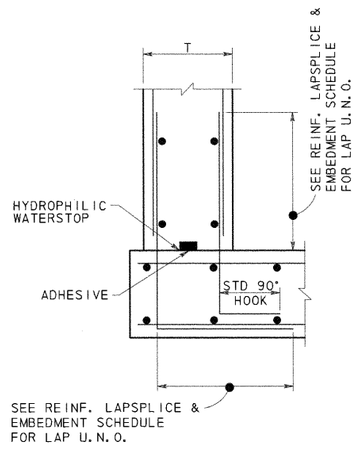

CONSTRUCTION JOINT
BASE OF WALLS

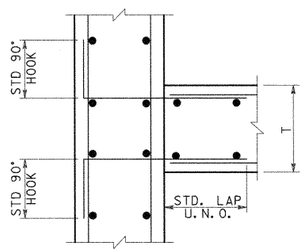

CONSTRUCTION JOINT
WALL INTERSECTIONS

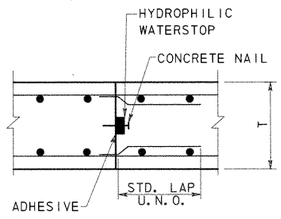

CONSTRUCTION JOINT
SLABS

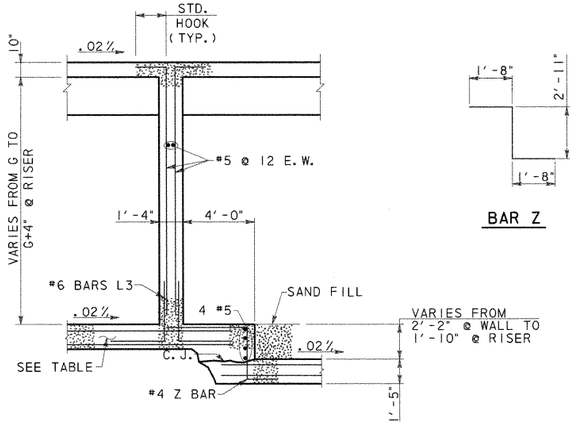

SECTION B

BAR Z

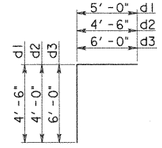

BARS D

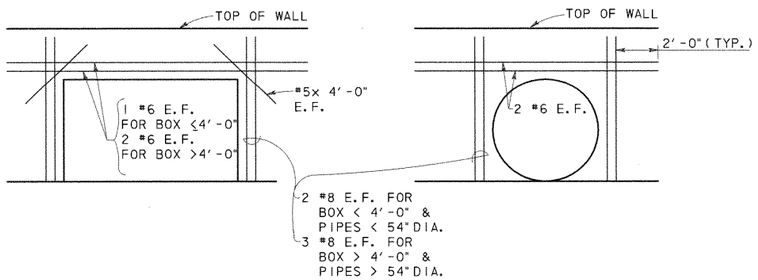

ADDITIONAL REINFORCING @ OPENINGS



NO.	DATE	REVISION	APPROVED

Turner Collie & Braden Inc.
Engineers • Planners • Project Managers

DATE: SUTTON | JOB NO. 62-14004-011 | APPROVED

© 1998 Texas Department of Transportation

US 183
WATER QUALITY PONDS
STRUCTURAL DETAILS

SCALE: AS NOTED | SHEET 4 OF 11

DESIGNED	CHECKED	DRAWN	CHECKED	FED. RD. DIV. NO.	STATE DIST. NO.	STATE	COUNTY	FEDERAL AID PROJECT NO. CONTROL NO.	SECTION NO.	JOB NO.	SHEET NO.	HIGHWAY NO.
WRB		MR		6	14	TEXAS	WILLIAMSON	NH99(556) 151	5	072	261d	US 183

UGPDT4.DGN

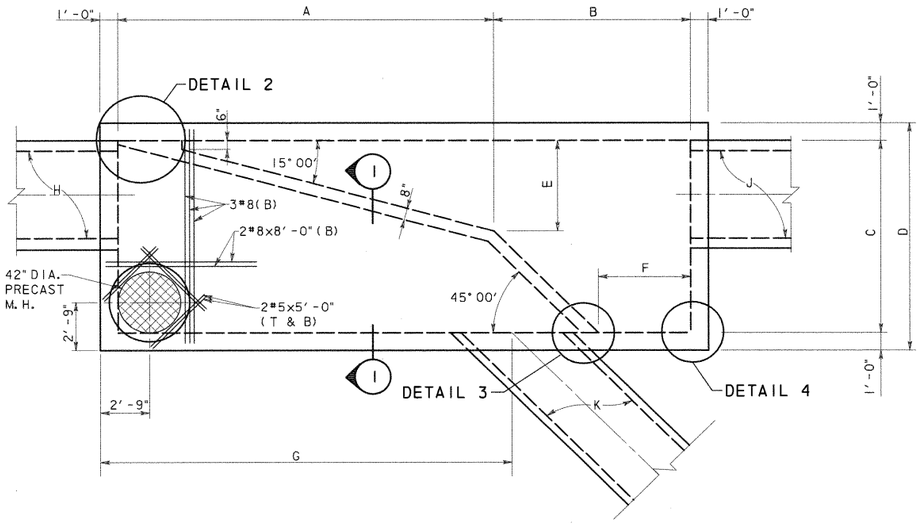

SPLITTER BOX DIMENSION TABLE

BOX LOCATION	A	B	C	D	E	F	G	H	J	K
POND SPRINGS	21'-0"	11'-0"	11'-0"	13'-0"	5'-2"	5'-2"	22'-0"	6x5 RCB	6x5 RCB	4x4 RCB
620 LEFT SIDE	13'-9"	8'-9"	8'-0"	10'-0"	3'-2"	4'-1"	13'-7"	*48" RCP	4x4 RCB	48" RCP

*48" RCP @ 15° SKEW
SEE DRAINAGE DETAIL SHEET.

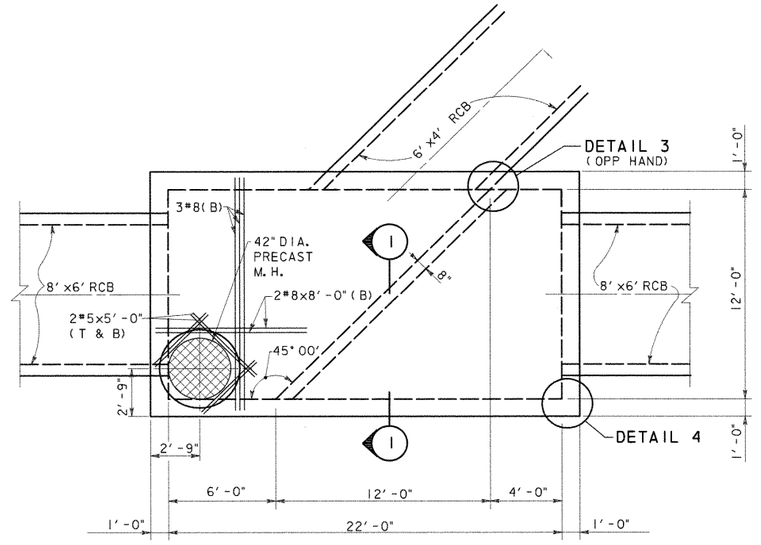

620 RIGHT SIDE
PLAN VIEW
SCALE: 1/4" = 1'-0"

ESTIMATED QUANTITIES			
BOX	CONCRETE (YD^3) *	REINFORCING (LBS) *	STRUCTURAL EXCAVATION (YD)
POND SPRINGS	56.8	7,964	
620 LEFT	32.5	4,096	
620 RIGHT	48.8	5,877	

* QUANTITIES FOR CONTRACTOR'S ESTIMATE ONLY. ALL ITEMS ARE SUBSIDIARY TO THE SPLITTER BOX.

PLAN VIEW
SCALE: 1/4" = 1'-0"

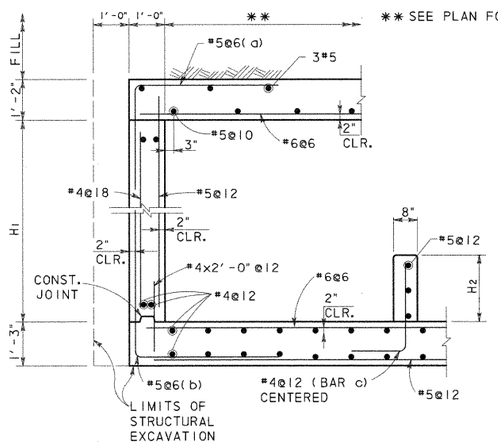

SECTION 1
SCALE: 1/2" = 1'-0"

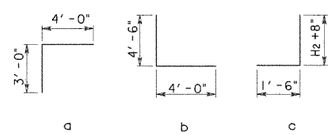

BOX LOCATION	H1	H2
POND SPRINGS	5'-6"	3'-0 1/2"
620 LEFT SIDE	4'-6"	2'-6"
620 RIGHT SIDE	6'-8"	1'-3"

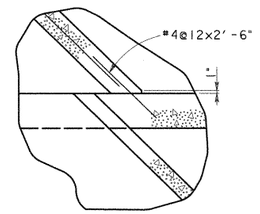

DETAIL 3
SCALE: 1/2" = 1'-0"

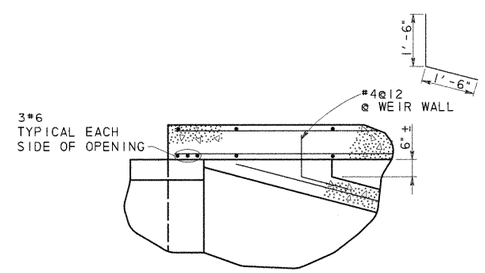

DETAIL 2
SCALE: 1/2" = 1'-0"

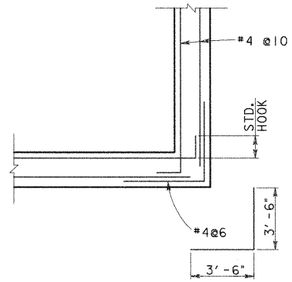

DETAIL 4
SCALE: 1/2" = 1'-0"

GENERAL NOTES:

1. DESIGNED ACCORDING TO CURRENT AASHTO 1996 STANDARD SPECIFICATIONS.
2. DESIGNED FOR HS20 LOADING AND TO THE MAXIMUM FILL HEIGHT SHOWN.
3. ALL REINFORCING SHALL BE GRADE 60 KSI.
4. ALL CONCRETE SHALL BE CLASS "C".
5. ALL DIMENSIONS ARE IN FEET AND INCHES AND ALL MASS IS IN POUNDS UNLESS OTHERWISE NOTED.



NO.	DATE	REVISION	APPROVED

Turner Collie & Braden Inc.
Engineers • Planners • Project Managers

DATE: SUTTON | JOB NO. 62-14004-011 | APPROVED

© 1998 Texas Department of Transportation

US 183
WATER QUALITY PONDS
STRUCTURAL DETAILS

SCALE: AS NOTED | SHEET 6 OF 11

Designed	WRB	FED. RD. DIV. NO.	STATE	FEDERAL AID PROJECT NO.				HIGHWAY NO.
Checked		6	TEXAS	NH99(556)				US 183
Drawn	MR	STATE DIST. NO.	COUNTY	CONTROL NO.	SECTION NO.	JOB NO.		SHEET NO.
Checked		14	WILLIAMSON	151	5	072		261f

UGPDT6.DGN

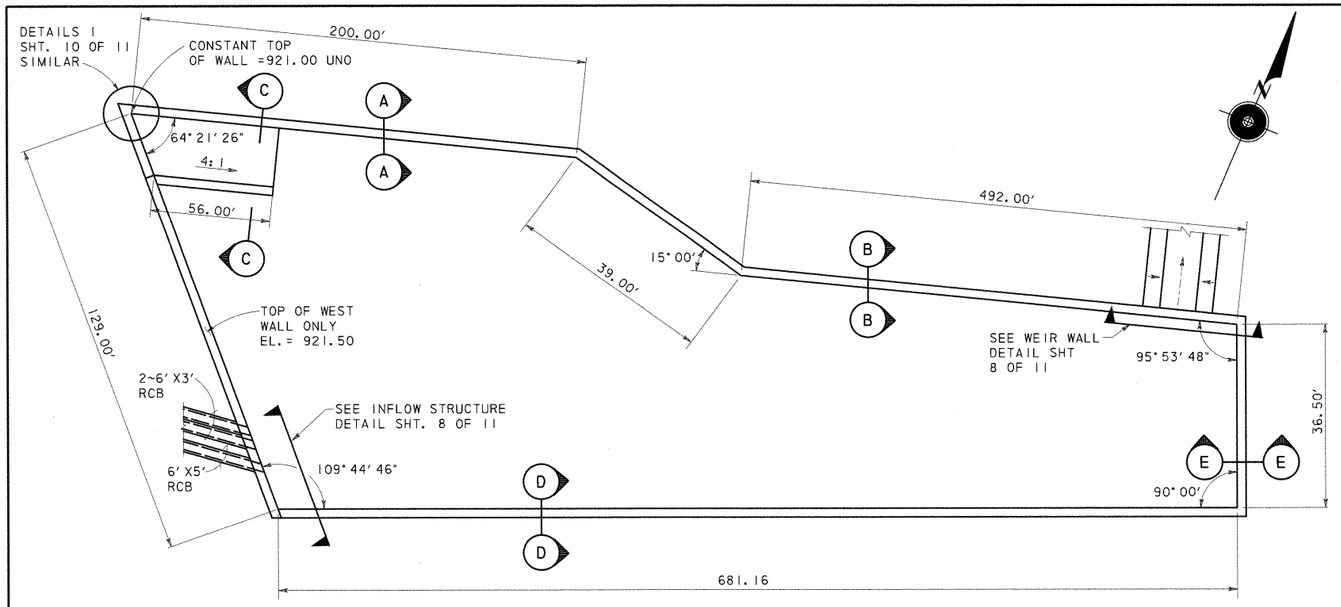

SYSTEM 3 DETENTION POND PLAN

ESTIMATED QUANTITIES (SECTION A)		
CONCRETE (YD^3) *	REINFORCING (LBS) *	** SQ. FT.
2,626	771,900	24,431

* QUANTITIES FOR CONTRACTOR'S ESTIMATE ONLY.

** EXPOSED FACE

*** WALL REINFORCING FOR 32' PANEL (SECT. A)									
A1 ~ 26 #5 @ 15" c-c		A2 ~ 25 #6 @ 15" c-c		A3 ~ 25 #7 @ 15" c-c		A4 ~ 26 #9 @ 15" c-c		A5 ~ 25 #9 @ 15" c-c	
Lgth	lb	Lgth	lb	Lgth	lb	Lgth	lb	Lgth	lb
129	292	145	455	218	928	188	1384	118	837

*** ONE SIDE SHOWN, BARS A BOTH SIDES

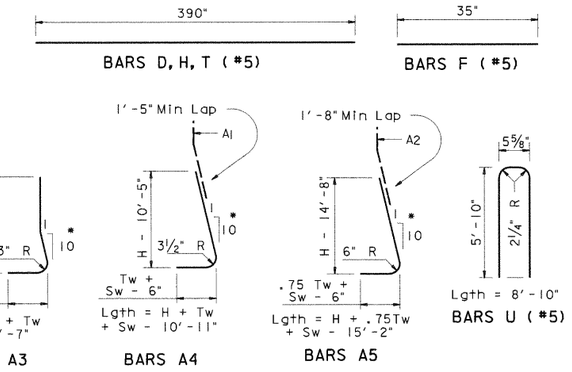

* A BARS ARE STRAIGHT IN FRONT FACE.

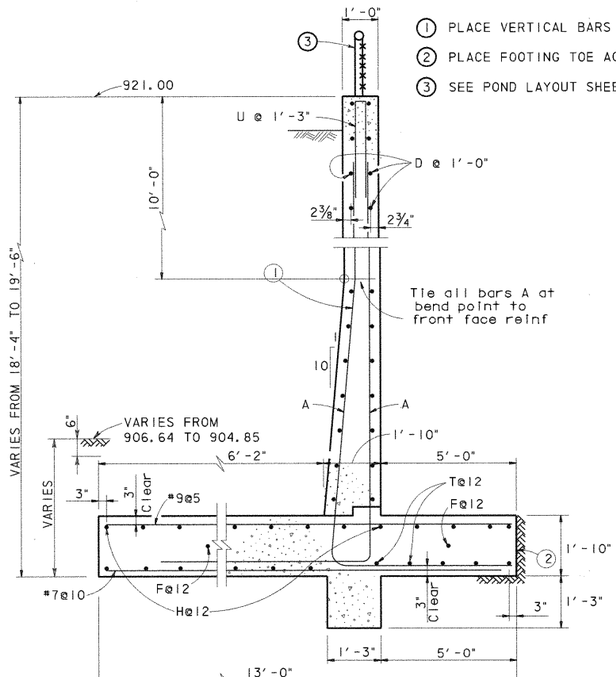

SECTION A-A
SCALE: ½" = 1'-0"

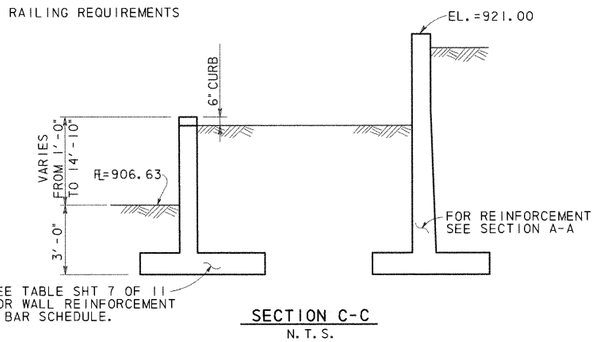

SECTION C-C
N.T.S.

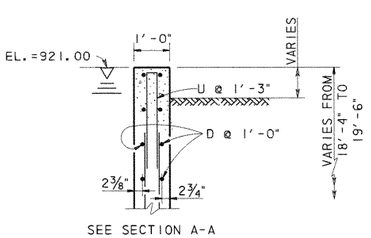

SEE SECTION A-A FOR REST OF DETAIL

SECTION D-D
SCALE: ½" = 1'-0"

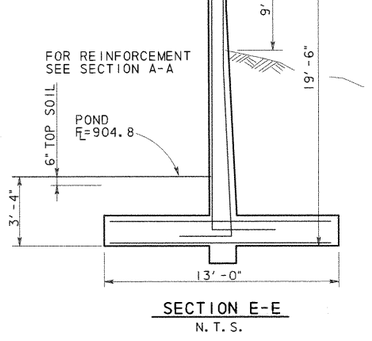

SECTION E-E
N.T.S.

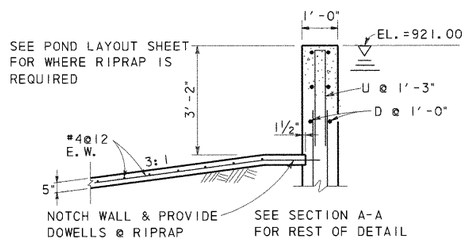

SECTION B-B
SCALE: ½" = 1'-0"

ELEVATION

GENERAL NOTES:

1. DESIGNED ACCORDING TO CURRENT AASHTO 1996 STANDARD SPECIFICATIONS.
2. DESIGNED FOR HS20 LOADING AND EQUIVALENT SOIL PRESSURE OF 60 PCF.
3. ALL REINFORCING SHALL BE GRADE 60 KSI.
4. ALL CONCRETE SHALL BE CLASS "A".
5. REINFORCING BARS SHALL BE ADJUSTED TO PROVIDE A MINIMUM OF 1½" CLEAR COVER.
6. ALL DIMENSIONS ARE IN FEET AND INCHES AND ALL MASS IS IN POUNDS UNLESS OTHERWISE NOTED.
7. CONSTRUCTION JOINT SHALL BE AT 32 FT. MAX. OC. PROVIDE CONSTRUCTION AT 15' MAX FROM EACH CORNER. CORNER CLOSURES SHALL BE PLACED LAST.
8. PROVIDE AN EXPANSION JOINT AFTER MAXIMUM OF 3 PANELS.
9. SEE SHEET 11 OF 11 FOR CONSTRUCTION AND EXPANSION JOINT DETAILS.

STATE OF TEXAS
WALLY R. BURNS
44162
REGISTERED PROFESSIONAL ENGINEER
4/28/99

NO.	DATE	REVISION	APPROVED

Turner Collie & Braden Inc.
Engineers • Planners • Project Managers

SUTTON | Job No. 62-14004-011 | Approved

© 1998 Texas Department of Transportation

US 183
WATER QUALITY PONDS
STRUCTURAL DETAILS

SCALE: AS NOTED | SHEET 7 OF 11

Designed	Checked	Drawn	Checked	FED. RD. DIV. NO.	STATE DIST. NO.	STATE	COUNTY	CONTROL NO.	SECTION NO.	JOB NO.	HIGHWAY NO. / SHEET NO.
WRB		MR		6	14	TEXAS	WILLIAMSON	151	5	072	US 183 / 261g

FEDERAL AID PROJECT NO. NH99(556)

UGPDT7.DGN

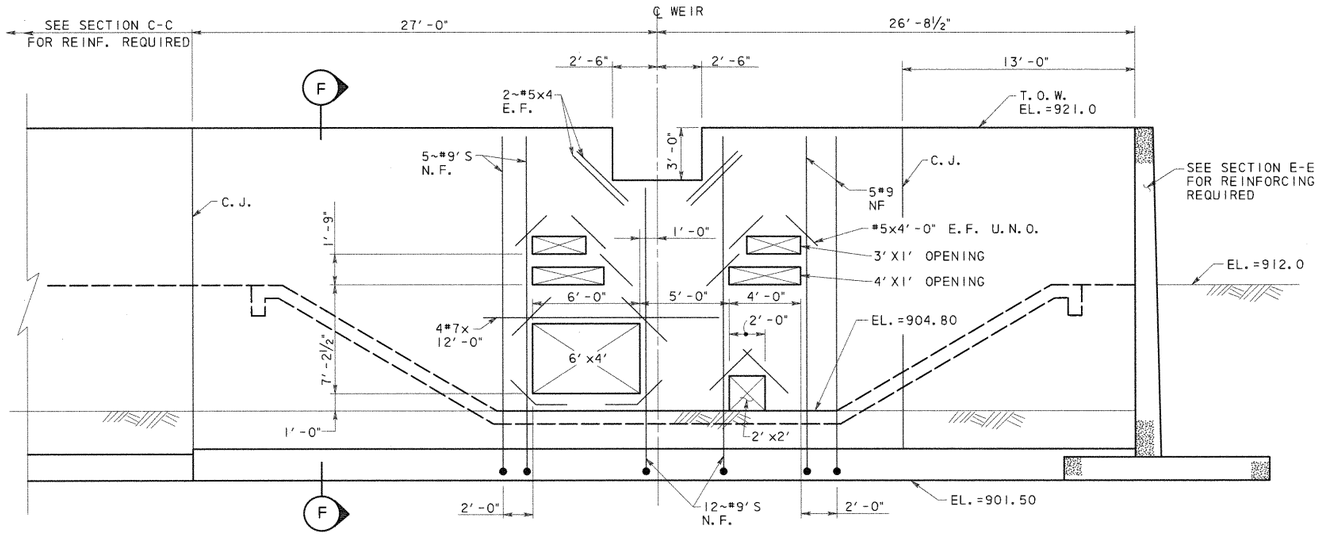

ADDITIONAL REINFORCING SHOWN, SEE SECTION F FOR TYPICAL REINF.

WEIR WALL DETAIL

SCALE: ¼" = 1'-0"

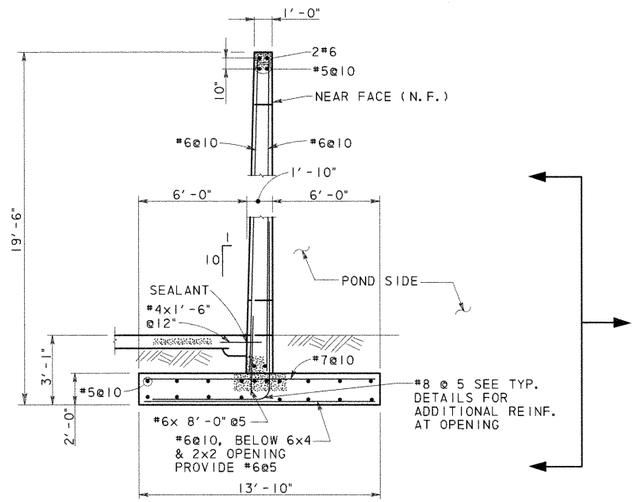

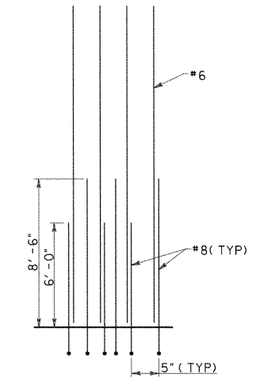

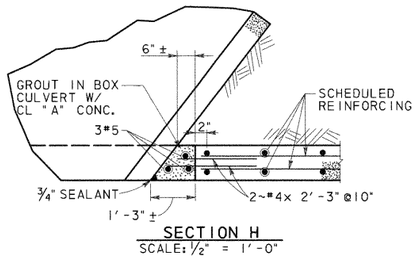

SECTION H

SCALE: ½" = 1'-0"

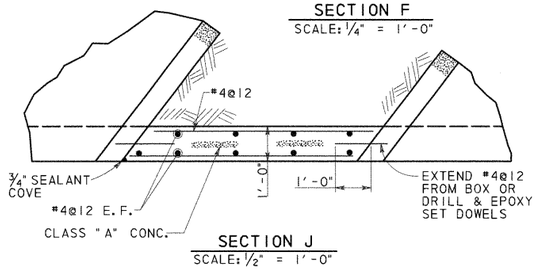

SECTION J

SCALE: ½" = 1'-0"

SECTION F

SCALE: ¼" = 1'-0"

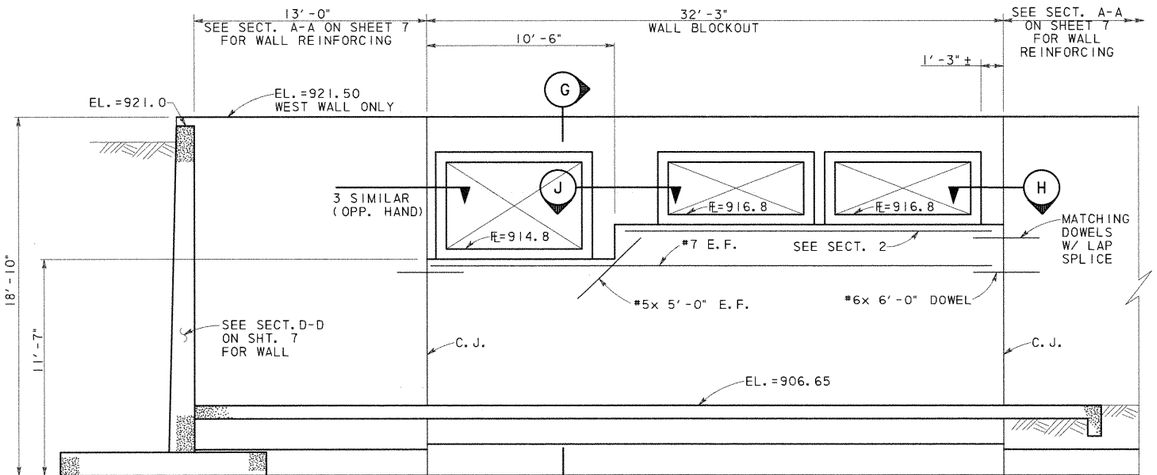

INFLOW STRUCTURE DETAIL

SCALE: ¼" = 1'-0"

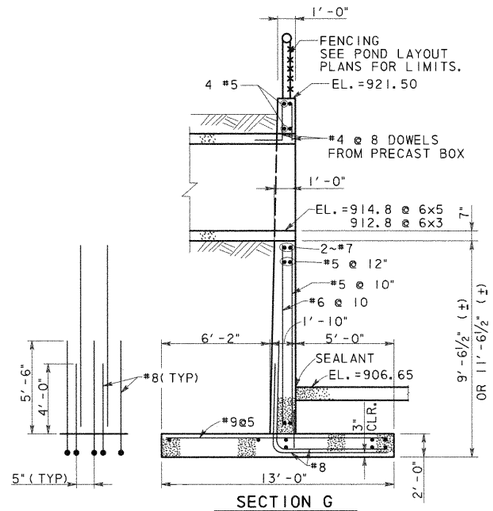

SECTION G

SCALE: ¼" = 1'-0"

STATE OF TEXAS · WALLY R. BURNS · 64262 · REGISTERED PROFESSIONAL ENGINEER

Wally R. Burns 4/28/99

NO.	DATE	REVISION	APPROVED

Turner Collie & Braden Inc.

Engineers • Planners • Project Managers

SUTTON | Job No. 62-14004-011 | Approved

© 1998 Texas Department of Transportation

US 183

WATER QUALITY PONDS STRUCTURAL DETAILS

SCALE: AS NOTED — SHEET 8 OF 11

Designed WRB	Fed. Rd. Div. No. 6	State TEXAS	Federal Aid Project No. NH99(556)	Highway No. US 183
Checked				
Drawn MR	State Dist. No. 14	County WILLIAMSON	Control No. 151	Section No. 5
Checked				Job No. 072

Sheet No. 261h

UGPDT8.DGN

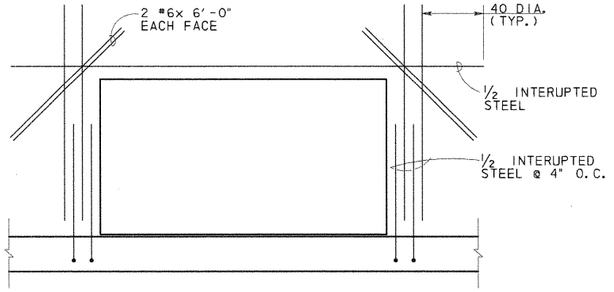

CULVERT OPENINGS

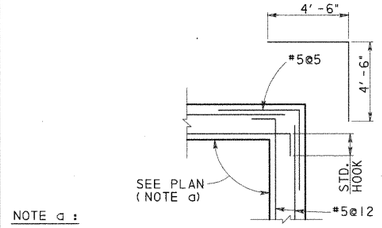

NOTE a :

SEE 620 MEDIAN POND (SHT. 5 OF 11), SYSTEM 3 POND (SHT. 7 OF 11)

DETAIL 1
SCALE: 1/2" = 1'-0"

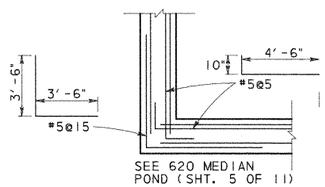

DETAIL 2
SCALE: 1/2" = 1'-0"

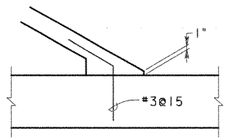

DETAIL 3
SCALE: 3/4" = 1'-0"

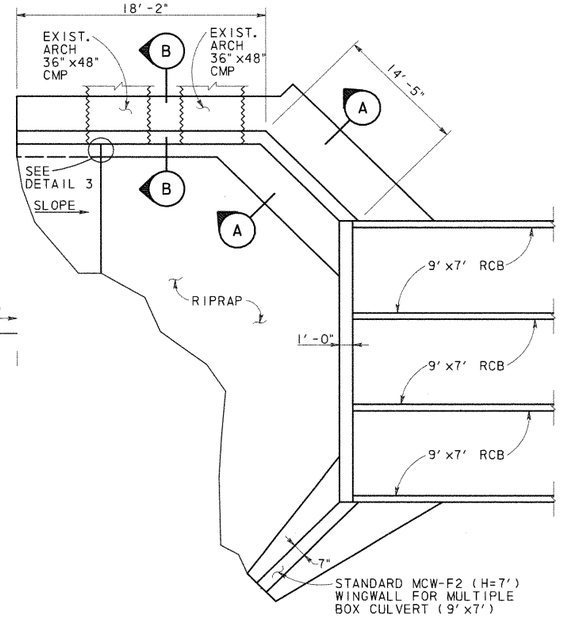

CULVERT @ POND SPRINGS PLAN
N. T. S.

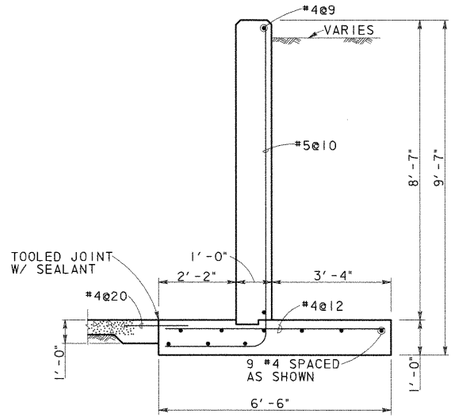

SECTION A-A
SCALE: 1/2" = 1'-0"

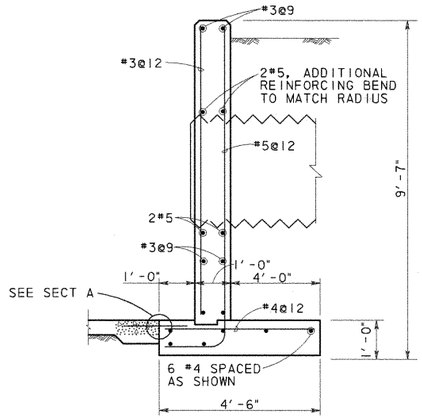

SECTION B-B
SCALE: 1/2" = 1'-0"

POND SPRINGS HEADWALL ESTIMATE QUANTITIES	
CONCRETE (YD^3) *	REINFORCING (LB) *
20.8	672

* QUANTITIES FOR CONTRACTOR'S INFORMATION ONLY. QUANTITIES SHOWN DO NOT INCLUDE THE .5 MCW-F2 WINGWALL OR THE CULVERT CURB.

THE HEADWALL SHALL BE PAID FOR AS MCW-F2(SPL).

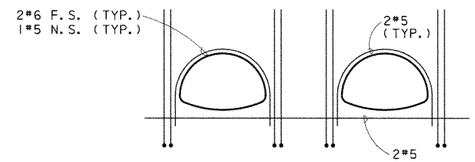

ADDITIONAL REINFORCMENT SHOWN. SEE SECTION B FOR TYPICAL

ELEVATION @ ARCH PIPE
N. T. S.

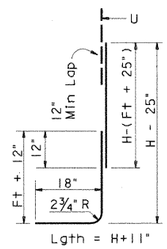

BARS B

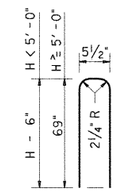

BARS U

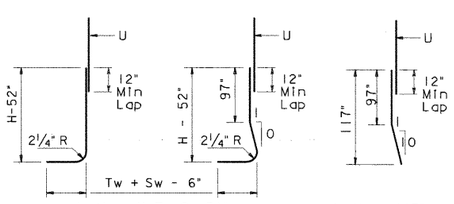

BARS A1

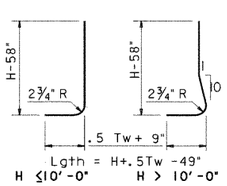

BARS A2

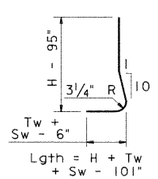

BARS A3

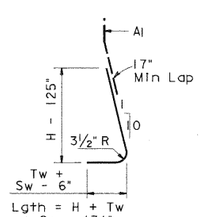

BARS A4

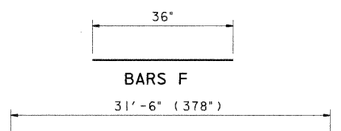

BARS D, H, T

BAR DETAILS POND SPRING

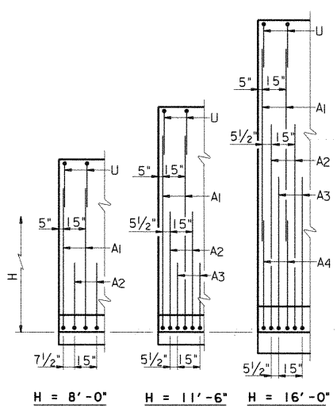

PARTIAL WALL ELEVATIONS
(Showing vertical reinforcing pattern in back face)

STATE OF TEXAS
WILLY R. BURNS
44162
REGISTERED
PROFESSIONAL ENGINEER
6/8/98

NO.	DATE	REVISION	APPROVED

Turner Collie & Braden Inc.
Engineers • Planners • Project Managers

TRANSPORTATION | Job No. 81-07401-024 | Approved

© 1998 Texas Department of Transportation

US 183
MISCELLANEOUS
WATER QUALITY PONDS
STRUCTURAL DETAILS

SCALE: AS NOTED | SHEET 10 OF 11

Designed	WRB	FED. RD. DIV. NO.	STATE	FEDERAL AID PROJECT NO.				HIGHWAY NO.
Checked		6	TEXAS	NH99(556)				US 183
Drawn	MR	STATE DIST. NO.	COUNTY	CONTROL NO.	SECTION NO.	JOB NO.		SHEET NO.
Checked		14	WILLIAMSON	151	5	072		261J

UGPDT10.DGN

AF 41904A

Ultimate Drainage Areas North of R.M. 620 Were Used In Storm Sewer And Water Quality Pond Design

R.M. 620

PECAN PARK

LAKE CREEK PARKWAY

HYMEADOW

Q50 = 447.4 cfs
Outfall 1

Pond 1A

Pond 1B

Pond 1C

Outfall 2
Q100 = 412 cfs
Q50 = 385 cfs

Pond 2A

Pond 2B

Pond 2C

Pond 2D1

Pond 2D2

R.M. 620 Median Pond

Q50 = 800 cfs

Q50 = 89.2 cfs

To Drainage Structures (By Others)

MELLOW MEADOWS DRIVE

LAKESTOP BLVD.

Interim Drainage Areas

US 183

R.M. 620

ANDERSON MILL ROAD

CONTRIBUTING AREA TO LAKE CREEK CHANNEL

A_{TOTAL} = 1133 ACRES
Q_{50} = 4100 cfs *
Q_{100} = 4400 cfs *

* THESE FLOWS ARE BASED ON REGIONAL ANALYSIS OF THE ENTIRE CONTRIBUTING AREA AND DO NOT EQUATE TO THE ACCUMULATED THYSYS FLOWS.

Q50 = 200 cfs

NO.	DATE	REVISION	APPROV.
4			
3			
2			
1			

Turner Collie & Braden Inc.
CONSULTING ENGINEERS
TEXAS AUSTIN/DALLAS/HOUSTON/PORT ARTHUR
COLORADO DENVER

Unit: AUSTIN | Job No. 72-07401-022 | Approved

STATE DEPARTMENT OF HIGHWAYS AND PUBLIC TRANSPORTATION

©1998 TxDOT

DRAINAGE AREA MAP

SCALE: 1" = 200'

Designed DAN	FED. NO. DIV. NO.	STATE	FEDERAL AID PROJECT NO.			HIGHWAY NO.
Checked	6	TEXAS	NH 99(556)			U.S. 183
Drawn WWS	STATE DIST. NO.	COUNTY	CONTROL NO.	SECTION NO.	JOB NO.	SHEET NO.
Checked DAN	14	WILLIAMSON	151	05	072	262a

STATE OF TEXAS
Robert W. Barnett
49537
REGISTERED PROFESSIONAL ENGINEER

Robert W. Barnett
5-09-88

A.F. 61904A

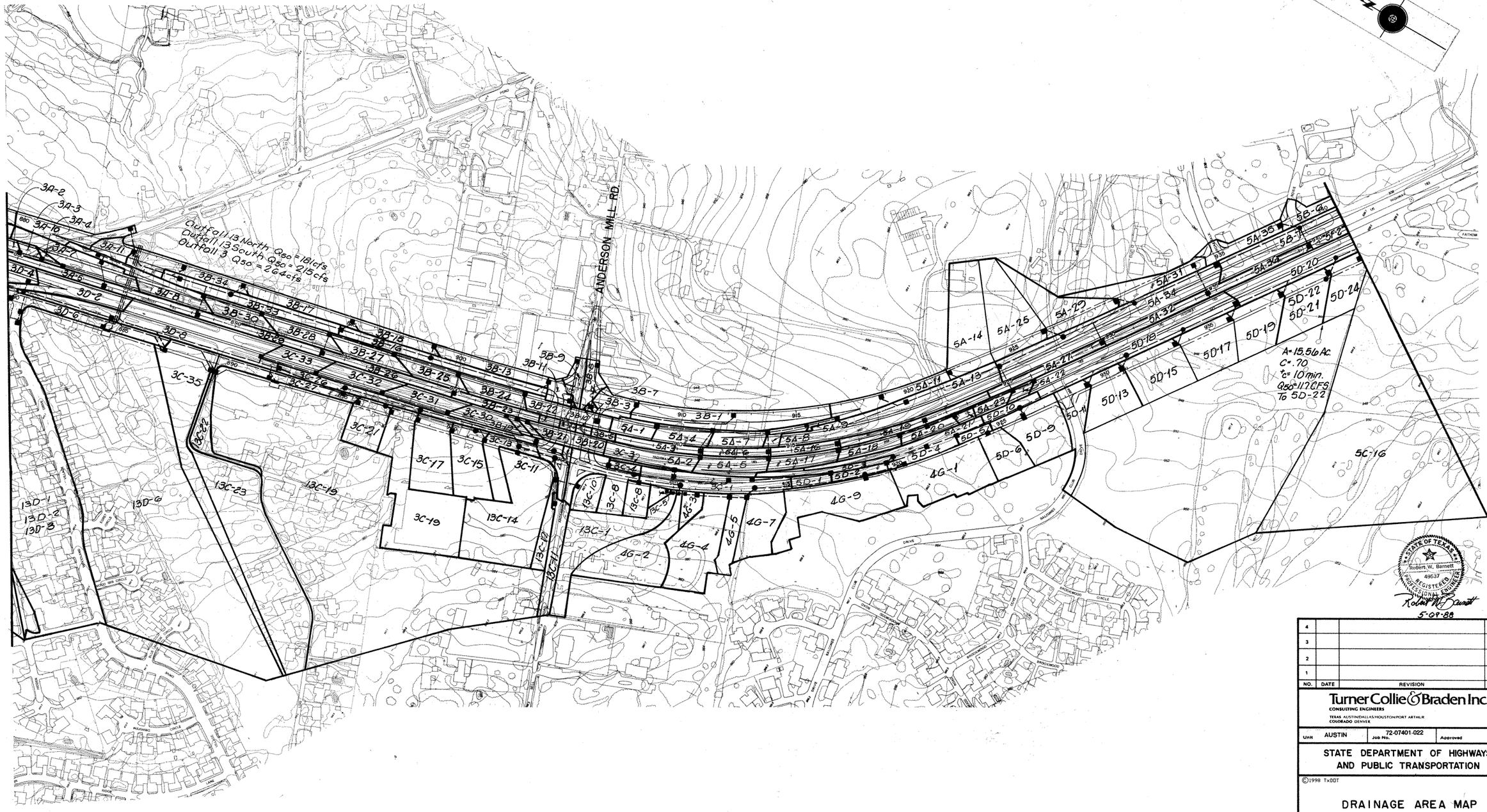

NO.	DATE	REVISION	APPROV.
4			
3			
2			
1			

Turner Collie & Braden Inc.
CONSULTING ENGINEERS
TEXAS AUSTIN/DALLAS/HOUSTON/PORT ARTHUR
COLORADO DENVER

Unit AUSTIN | Job No. 72-07401-022 | Approved

STATE DEPARTMENT OF HIGHWAYS AND PUBLIC TRANSPORTATION

©1998 TxDOT

DRAINAGE AREA MAP

SCALE: 1"=200'

Designed DAN	FED. RD. DIV. NO.	STATE	FEDERAL AID PROJECT NO.			HIGHWAY NO.
Checked	6	TEXAS	NH 99(556)			U.S. 183
Drawn WWS	STATE DIST. NO.	COUNTY	CONTROL NO.	SECTION NO.	JOB NO.	SHEET NO.
Checked DAN	14	WILLIAMSON	151	05	072	202b

A.F. 41804A

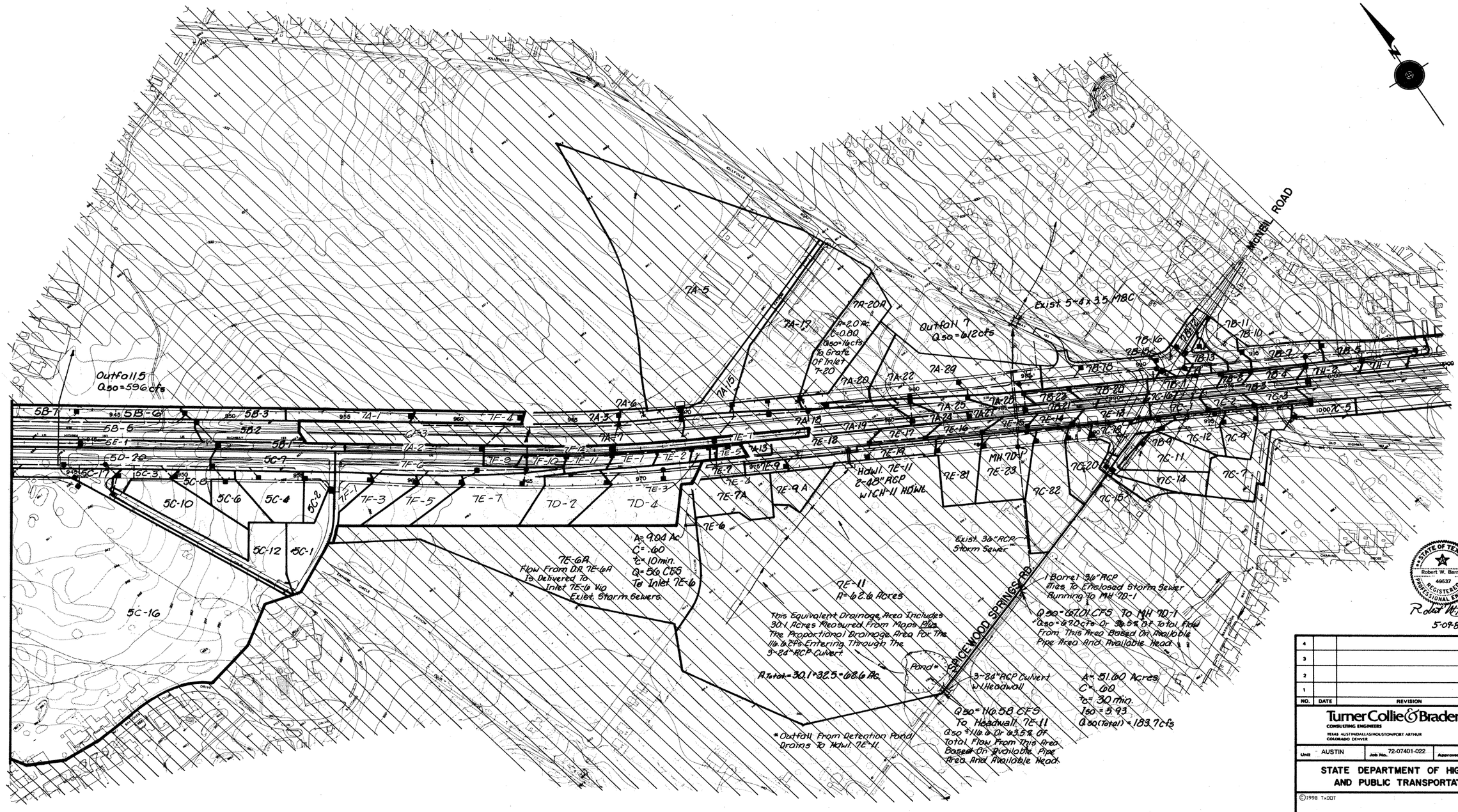
MICHEL ROAD
Outfall 5
Q50=596cfs
Outfall 7
Q50=612cfs
Exist 5-8'x3.5' MBC
7A-5
7A-17
7A-20A
A=2.0 Ac.
C=0.80
Q50=14cfs
To Grate Of Inlet 7-20
7A-15
7A-6
7A-3
7A-7
7A-18
7A-19
7A-20
7A-22
7A-29
7A-25
7A-24
7A-27
7A-26
7A-1
7A-2
7A-13
7F-4
7F-12
7F-11
7F-10
7F-9
7F-8
7F-6
7F-5
7F-3
7F-2
7F-1
7E-1
7E-2
7E-5
7E-7
7E-8
7E-9
7E-9A
7E-9A
7E-6
7E-3
7E-4
7E-7A
7E-10
7E-12
7E-13
7E-14
7E-15
7E-16
7E-17
7E-18
7E-19
7E-11
7E-81
7E-82
7E-23
MH 7D-1
7D-2
7D-4
HDWL 7E-11
2-48" RCP
W/CH-11 HDWL
5B-7
5B-6
5B-5
5B-3
5B-2
5B-1
5E-1
5D-20
5C-17
5C-7
5C-3
5C-8
5C-10
5C-6
5C-4
5C-2
5C-12
5C-1
5C-16
7B-11
7B-10
7B-16
7B-15
7B-13
7B-12
7B-14
7B-18
7B-17
7B-1
7B-2
7B-3
7B-4
7B-5
7B-6
7B-7
7B-8
7B-9
7B-21
7B-22
7B-23
7C-16
7C-1
7C-2
7C-3
1000 7C-5
7C-18
7C-19
7C-20
7C-12
7C-4
7C-11
7C-14
7C-7
7C-82
7C-15
7D-9
7D-11
7D-12
7D-13
7D-14
7D-15
7D-16
7D-17
7D-18
7D-19
7D-20
7D-21
7D-22
7D-23
7D-24
7D-25
7D-26
7D-27
7D-28
7D-29
7D-30
7D-31
7D-32
7D-33
7D-34
7D-35
7D-36
7D-37
7D-38
7D-39
7D-40
7D-41
7D-42
7D-43
7D-44
7D-45
7D-46
7D-47
7D-48
7D-49
7D-50

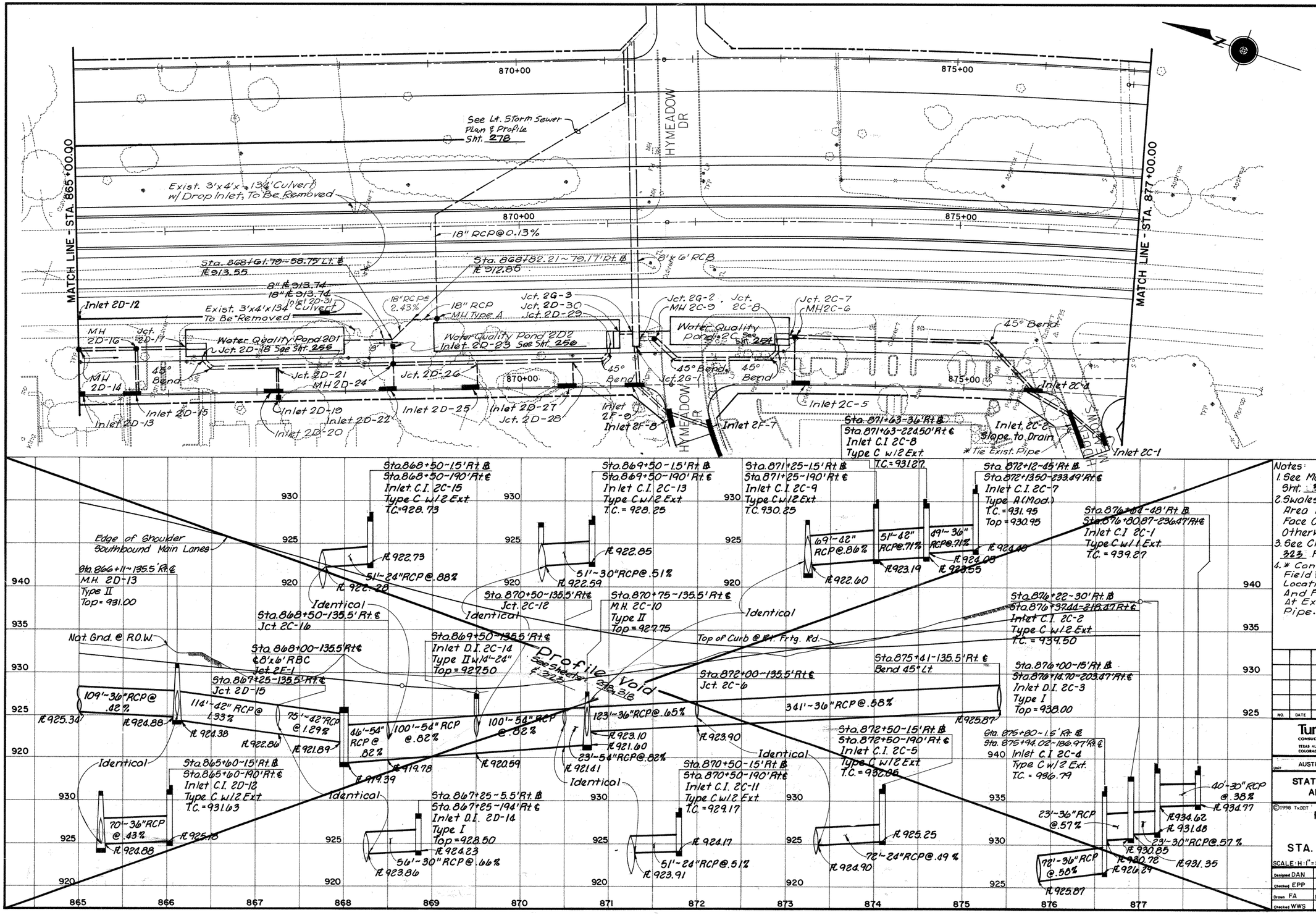

Notes:
1. See Main Lane Storm Sewer Profiles Sht: 316 For Main Lane Drainage.
2. Swales And Inlets In Separation Area Will Typically Be 6' Behind Face Of Curb Unless Dimensioned Otherwise.
3. See Cross Culvert Profiles Sht. 323 For Additional Information.
4. * Contractor Shall Field Verify Pipe Location, Size And Flow Line At Existing Pipe.

STATE OF TEXAS — Robert W. Barnett — 49537 — REGISTERED — PROFESSIONAL ENGINEER
Robert W. Barnett 5-09-88

NO.	DATE	REVISION	APPROVED

Turner Collie & Braden Inc.
CONSULTING ENGINEERS
TEXAS AUSTIN/DALLAS/HOUSTON/PORT ARTHUR
COLORADO DENVER

Unit	Job No.	Approved
AUSTIN	72-07401-022	

STATE DEPARTMENT OF HIGHWAYS AND PUBLIC TRANSPORTATION

©1998 TxDOT

RIGHT STORM SEWER PLAN & PROFILE
STA. 865+00 TO STA. 877+00

SCALE: H:1"=50' V:1"=5'

Designed	Fed. Rd. Div. No.	State	Federal Aid Project No.	Highway No.
Checked EPP	6	TEXAS	NH 99(556)	U.S. 183
Drawn FA	State Dist. No.	County	Control No. / Section No. / Job No.	Sheet No.
Checked WWS	14	WILLIAMSON	151 / 05 / 072	297

EDGE OF SHOULDER SOUTHBOUND MAIN LANES.

STA. 865+65.75 – 53' LT. BL.
STA. 865+65.75 135.5'RT.CL.
MH 2D-16
TYPE A
TOP 933.0

STA. 865+00 – 53' LT. BL.
STA. 865+00 – 135.5' RT. CL
MH 2D-14
TYPE A
TOP = 932.8

STA. 866+48.58 – 30.5' LT. BL.
STA. 866+48.58 – 158' R. CL.
45° BEND

STA. 866+43.33 – 43.75' LT. BL.
STA. 866+43.33 – 144.75' RT. CL
BEGIN 48" RCP.
JCT. 2D-18
END SPLITTER BOX

STA. 866+24.75 – 53' LT. BL.
STA. 866+24.75 – 135.5' RT. CL.
JCT. 2D-17
END 42" RCP
BEGIN SPLITTER BOX

STA. 867+25 – 30.5' LT. BL.
STA. 867+25 – 158' RT. CL.
JCT. 2D-21

STA. 868+55.75 – 30.5' LT. CL.
STA. 868+55.75 – 158' RT. CL.
MH 2D-24
TYPE A
TOP 928.93

STA. 870+55.75 – 30.5' LT. BL.
STA. 870+55.75 – 158' RT. CL.
JCT. 2D-28

STA. 869+50 – 30.5' LT. BL.
STA. 869+50 – 158' RT. CL.
JCT. 2D-26

STA. 871+25.67 – 62' LT. BL.
STA. 871+25.67 – 126.5' RT. CL
JCT. 2C-3

STA. 871+09 – 62' LT. BL.
STA. 871+09 – 126.5' RT. CL
BEGIN 54" RCP
JCT. 2D-30
END SPLITTER BOX

STA. 870+99.71 – 43.71' LT. BL.
STA. 870+99.71 – 144.79 RT. CL
END 54" RCP
JCT. 2D-29
BEGING SPLITTER BOX

STA. 870+94.50 – 30.5' LT. BL.
STA. 870+94.50 – 158' RT. CL.
45° BEND

STA. 871+33.67 – 53' LT. BL.
STA. 871+33.67 – 135.5' RT. CL.
JCT. 2C-2

STA. 871+49.67 – 53' LT. BL.
STA. 871+49.67 – 135.5' RT. CL.
MH 2C-9
TYPE A
TOP 929.5

STA. 871+72.15 – 30.5 LT. BL.
STA. 871+72.29 – 158' RT. CL.
45° BEND

STA. 872+82.48 – 30.48 LT. BL.
STA. 872+86.37 – 158' RT. CL.
45° BEND

STA. 872+88.76 – 44.75' LT. BL.
STA. 872+92.87 – 143.74' RT. CL
BEGIN 36" RCP
JCT. 2C-8
END SPLITTER BOX

STA. 873+01.33 – 52.98' LT. BL.
STA. 873+05.86 – 135.5' RT. CL
END 36" RCP
JCT. 2C+7
BEGIN SPLITTER BOX

STA. 873+09.26 – 52.98' LT. BL.
STA. 873+14.05 – 135.5' RT. CL
MH 2C-5
TYPE A
TOP 931.0

STA. 875+22.92 – 52.47' LT. BL.
STA. 875+35.01 – 135.5' RT. CL
45° BEND

STA. 875+80 – 1.5' RT. BL.
STA. 875+94.02 – 189.97' RT. CL.
INLET C.I. 2C-4
TYPE II R (20').
T.C. 936.76

STA. 876+27.79 – 41.75' RT. BL.
STA. 876+43.43 – 230.22' RT. CL.
INLET C.I. 2C-2
TYPE II R (40')
T.C. 938.2

STA. 876+63.45 – 48.37' RT. BL.
STA. 876+80.31 – 236.83' RT. CL.
INLET C.I. 2C-1
TYPE II R (10')
T.C. 938.6

NAT. GND. @ R.O.W.

TOP OF CURB @ RIGHT FRONTAGE ROAD.

60'–36" RCP @ 1.00%
FL 925.17
FL 924.51
FL 921.53

56' – 42" RCP @ 0.68%
FL 921.13
FL 920.63
SPLITTER BOX

92' – 48" RCP @ 0.56%
FL 920.53
FL 921.51
FL 920.01

128' – 48" RCP @ 0.56%
FL 919.28
FL 918.78

90' – 54" RCP @ 0.76%
FL 920.57
FL 918.07

106' – 54" RCP @ 0.76%
FL 920.26
FL 917.26

54' – 54" RCP @ 0.76%
FL 916.85
FL 916.71

17' – 54" RCP @ 0.76%
FL 916.58

8'x 6' RCB
FL 916.13 (@ STA. 871+33.67 CL)
FL 916.09 (@ STA. 871+25.67 CL)

157' – 36" RCP @ 0.61%
FL 923.82
SPLITTER BOX
FL 922.84

6' – 36" RCP @ 0.63%
FL 923.90
FL 918.89

14' – 36" RCP @ 0.63%
FL 923.95
FL 918.79

213' – 36" RCP @ 0.60%
FL 924.51

73' – 36" RCP @ 0.60%
FL 925.81
FL 926.26

44' – 18" RCP @ 1.25%
FL 934.10
FL 933.50

52' – 36" RCP @ 0.57%
FL 931.30
FL 930.98

12" WL
FL 926.7

INDENTICAL

STA. 865+60 – 1.5' RT. BL.
STA. 865+60 – 190' RT. CL.
INLET C.I. 2D-15
TYPE II R (20')
T.C. 931.63

STA. 867+19.25 – 1.5' RT. BL.
STA. 867+19.25 – 190' RT. CL.
INLET C.I. 2D-20
TYPE II R (20')
T.C. 930.00

STA. 867+25 – 5.5' RT. BL.
STA. 867+25 – 194' RT. CL.
INLET D.I. 2D-19
TYPE I
TOP = 928.50

STA. 869+44.25 – 1.5' RT. BL.
STA. 869+44.25 – 190' RT. CL.
INLET C.I. 2D-25
TYPE II R (20')
T.C. 928.20

STA. 873+09.26 – 27.4' LT. BL.
MH 2C-6

STA. 873+15 – 1.5' RT. BL.
STA. 873+20 – 189.98' RT. CL.
INLET C.I. 2C-5
TYPE II R (20')
T.C. 932.95

STA. 871+29.67 – 143.5' RT. CL.
JCT. 2G-1
SEE SHEET ___ FOR TIE INTO 6'X6' RCB.

STA. 871+25 – 1.5' RT. BL.
STA. 871+25 – 190' RT. CL.
INLET C.I. 2F-9
TYPE II R (20')
T.C. 930.21

STA. 871+65.08 – 38.52' RT. BL.
STA. 871+65.08 – 227.02' RT. CL.
INLET C.I. 2F-8
TYPE II R (30')
T.C. 931.5

STA. 872+16.85 – 62.34' RT. BL.
STA. 872+18.53 – 250.83' RT. CL.
INLET C.I. 2F-7
TYPE II R (40')
T.C. 932.2

FL 925.01
FL 925.23
48' – 24" RCP @ 0.42%
FL 921.53

FL 924.00
FL 924.23
FL 924.20
2^30" RCP @ 0.60%
FL 921.51
12" WL
FL 920.8
29' – 30" RCP @ 8.03%

STA. 868+50 – 1.5' RT. BL.
STA. 868+50 – 190' RT. CL.
INLET C.I. 2D-22
TYPE II R (20')
T.C. 928.73

STA. 868+55.75 – 138.5' RT. CL.
INLET D.I. 2D-23
TYPE I
TOP 927.5

16' – 24" RCP @ 1.40%
FL 922.25
FL 921.97

26' – 18" RCP @ 0.84%
FL 922.73
FL 922.47

FL 921.70
29' – 24" RCP @ 3.65%
FL 920.57

STA. 870+55.75 – 30' LT. BL.
JCT. 2D-28

STA. 870+50 – 1.5' RT. BL.
STA. 870+50 – 190' RT. CL.
INLET C.I. 2D-27
TYPE II R (20')
T.C. 929.17

FL 923.17
29' – 18" RCP @ 9.39%
FL 920.26
FL 917.26

51' – 24" RCP @ 0.83%
FL 925.45
FL 925.01

8'x 6' RCB
FL 916.16

44' – 36" RCP @ 0.72%
FL 924.40
FL 924.06

45' – 42" RCP @ 0.71%
FL 923.55
12" WL
FL 920.2

43' – 42" RCP @ 6.51%
FL 923.20
FL 921.21
FL 918.28

STA. 865+00 TO 877+00
FOR PLAN SEE SHEET 297

865 866 867 868 869 870 871 872 873 874 875 876 877

DATE: 04-01-99
JOB No.: 72-07401-022
PATH: K:\ 07401022\drainage\pro865r.dgn

STATE OF TEXAS
REBECCA A BILLS
82587
REGISTERED PROFESSIONAL ENGINEER
Rebecca A. Bills
5-3-99

Turner Collie & Braden Inc.
ENGINEERS • PLANNERS • PROJECT MANAGERS

AUSTIN | Job No. 72-07401-022 | File

Texas Department of Transportation

©1998 TxDOT

US 183
RIGHT STORM SEWER
PROFILES

SCALE: H:1"=50', V:1"=5'

Designed	KKY	FED. RD. DIV. NO.	STATE	FEDERAL AID PROJECT NO.					HIGHWAY NO.
Checked	DLG	6	TEXAS	NH 99(556)					U.S.183
Drawn	JAM	STATE DIST. NO.	COUNTY	CONTROL NO.	SECTION NO.	JOB NO.			SHEET NO.
Checked	DLG	14	WILLIAMSON	0151	05	072			298

BASIN C

	ITEM 100	ITEM 110	ITEM 110	ITEM 132	ITEM 132	ITEM 160	ITEM 160	ITEM 164	ITEM 164	ITEM 164	ITEM 168	ITEM 169	ITEM 169	ITEM 247	ITEM 310	ITEM 400	ITEM 400	ITEM 402	ITEM 421	ITEM 423	ITEM 432	ITEM 450	ITEM 450	ITEM 460	ITEM 462	ITEM 462	ITEM 462
	Prep. R.O.W.	EXCAV (CHANNEL)	EXCAV (POND)	EMBANK (TY B)	EMBANK (DC) (TY C) MOD	Furn & Plac Tpsl (Cl 2) (4in)	Furn & Plac Tpsl (Cl 2) (6in)	Cell Fib Mulch Seed	Drill Seed (Temp) (Warm)	Drill Seed (Perm) (Urban) (Clay)	Vegetative Watering	SOIL RET BLNKT (CL1) (TY A)	SOIL RET BLNKT (CL2)(TY G)	Fl Bs (TyD Gr6 Cl 2) (Comp In Plac)	Apsh Mat (MC-30)	Struct Excav (Sewer)	Struct Excav (Culv Large)	TRENCH EXCAV PROTECT	CL C Conc. (misc.)	Pond Wall (Cast-In-Place)	RIPRAP (CONC.) (CL B)	Rail (TY PR)	Rail (TY C4) (S)	CMP (Gal Stl 12in)	Conc Box Culv (2'x4')	Conc Box Culv (4'x4')	Conc Box Culv (6'x4')
	AC	CY	CY	CY	CY	SY	SY	SY	SY	SY	MG	SY	SY	TONS	GAL	CY	CY	LF	CY	SF	CY	LF	LF	LF	LF	LF	LF
620 Median Pond	–	–	7313	–	892	–	2144	–	1072	2144	54	–	–	–	–	4130	–	2165	81.3	9811	5.1	–	1055	35	–	–	468
LakeCreek Pond 1A	–	–	(2053)	–	–	–	–	–	–	–	–	–	–	–	–	107	–	95	–	–	–	–	–	6	–	–	–
LakeCreek Pond 1B	–	–	(1908)	–	–	–	–	–	–	–	–	–	–	–	–	42	–	54	–	–	–	–	–	6	–	–	–
LakeCreek Pond 1C	–	–	(1657)	–	–	–	–	–	–	–	–	–	–	–	–	7	–	10	–	–	–	–	–	6	–	–	–
Hymeadow Pond 2A	–	–	(3048)	–	–	–	–	–	–	–	–	–	–	–	–	115	–	62	–	–	–	–	–	6	–	–	–
Hymeadow Pond 2B	–	–	(1529)	–	–	–	–	–	–	–	–	–	–	–	–	2	–	7	–	–	–	–	–	6	–	–	–
Hymeadow Pond 2C	–	–	(2260)	–	–	–	–	–	–	–	–	–	–	–	–	50	–	34	–	–	–	–	–	6	–	–	–
Hymeadow Pond 2D1	–	–	(3286)	–	–	–	–	–	–	–	–	–	–	–	–	212	–	124	–	–	–	–	–	6	–	–	–
Hymeadow Pond 2D2	–	–	(4381)	–	–	–	–	–	–	–	–	–	–	–	–	1893	–	735	–	–	–	–	–	6	–	–	–
Pond Springs Pond	1.04	93	5300	–	441	–	5056	–	2420	4840	121	1403	–	45	–	1656	–	336	57.8	5002	78	–	–	13	–	44	–
Pond Springs Detention Pond	1.15	1162	22610	308	–	1459	2780	–	3391	6782	279	363	2186	141	50	2056	756	1135	–	24431	280	120	140	0	–	–	–
Woods Pond	7.1	2640	64420	1202	8970	–	34364	437	18275	36550	859	6500	6500	275	–	2016	–	649	–	–	166.5	–	–	75	152	–	–
TOTAL	9.29	3895	99643	1510	10303	1459	44,344	437	25158	50316	1313	8266	8686	461	50	12286	756	5406	139.1	39244	529.6	120	1195	171	152	44	468

	ITEM 462	ITEM 462	ITEM 462	ITEM 462	ITEM 462	ITEM 462	ITEM 464	ITEM 464	ITEM 464	ITEM 464	ITEM 465	ITEM 465	ITEM 465	ITEM 465	ITEM 466	ITEM 466	ITEM 466	ITEM 466	ITEM 466	ITEM 466	ITEM 466	ITEM 467	ITEM 481	ITEM 481	ITEM 481	ITEM 481	ITEM 529	ITEM 530
	Conc Box Culv (4'x4')	Conc Box Culv (6'x4')	Conc Box Culv (6'x5')	Conc Box Culv (7'x4')	Conc Box Culv (8'x4')	Conc Box Culv (8'x6')	RCP SEW (D-LOAD) (18")	RCP SEW (D-LOAD) (24")	RCP SEW (D-LOAD) (36")	RCP SEW (D-LOAD) (48")	MAN H (COMPL) TY A	INLET (COMPL) (DROP) (TY I)	INLET (COMPL) (DROP) (TY IB)	INLET (COMPL) (DROP) (TY II)	CULV HDWLL TY PW-45	CULV HDWLL TY MCW-P-15 MOD	CULV HDWLL TY MCW-P-30 MOD	CULV HDWLL TY MCW-P-45 MOD	CULV HDWLL TY MCW-F1-30	CULV HDWLL TY FW-N	CULV HDWLL TY FW-45	S.E.T. TYII	* P.V.C. PIPE (SCH 40) 4"	* P.V.C. PIPE (SCH 40) 6"	* P.V.C. PIPE (SCH 40) 8"	* P.V.C. PIPE (SCH 40) 12"	* CONC. CURB (TY II) (6 IN)	CONC. DRVWY
	LF	LF	LF	LF	LF	LF	LF	LF	LF	LF	EA	EA	EA	EA	EA	EA	EA	EA	EA	EA	EA	EA	LF	LF	LF	LF	LF	SY
620 Median Pond	–	468	–	–	–	–	1487	–	–	210	–	–	–	–	–	–	–	–	–	–	–	1	324	–	77	–	–	21
LakeCreek Pond 1A	–	–	–	–	–	–	–	–	–	–	–	–	–	–	–	–	–	–	–	–	–	–	144	25	100	–	–	–
LakeCreek Pond 1B	–	–	–	–	–	–	–	–	–	–	–	–	–	–	–	–	–	–	–	–	–	–	114	24	58	–	–	–
LakeCreek Pond 1C	–	–	–	–	–	–	–	–	–	–	–	–	–	–	–	–	–	–	–	–	–	–	120	25	14	–	–	–
Hymeadow Pond 2A	–	–	–	–	–	–	6	–	–	–	1	–	–	–	–	–	–	–	–	–	–	–	138	25	65	–	–	–
Hymeadow Pond 2B	–	–	–	–	–	–	–	–	–	–	–	–	–	–	–	–	–	–	–	–	–	–	63	25	11	–	–	–
Hymeadow Pond 2C	–	–	–	–	–	–	–	–	–	–	–	–	–	–	–	–	–	–	–	–	–	–	156	25	38	–	–	–
Hymeadow Pond 2D1	–	–	–	–	–	–	70	–	–	–	–	–	–	–	–	–	–	–	–	–	–	–	288	25	54	–	–	–
Hymeadow Pond 2D2	–	–	–	–	–	–	735	–	–	–	1	–	–	–	–	–	–	–	–	–	–	–	252	27	5	–	–	–
Pond Springs Pond	44	–	–	–	–	–	–	–	–	–	–	–	–	–	–	–	–	–	–	–	–	–	704	–	357	–	–	42
Pond Springs Detention Pond	–	–	96	–	81	84	–	136	287	563	2	3	1	3	–	2	2	–	–	1	–	–	–	–	–	–	90	30
Woods Pond	–	–	30	175	333	28	66	–	–	–	–	2	–	–	1	–	–	1	1	–	1	6	–	–	–	75	–	37
TOTAL	44	468	126	175	414	112	2364	136	287	773	4	5	1	3	1	2	2	1	1	1	1	7	2303	201	779	75	90	130

	ITEM 531	ITEM 550	ITEM 550	ITEM 550	ITEM 3116	ITEM 3116	ITEM 3116	ITEM 5014	ITEM 5014	ITEM 5014	ITEM 8608
	CONC. WALKWAY (5 IN)	CHAIN LINK FENCE (6FT)	VEH. GATE (DOUBLE) (12FT)	VEH. GATE (DOUBLE) (20FT)	ASPH CONC (TY C) (SURF) (PV 32 MIN)	ASPH CONC. (TY C) 2"	ASPH CONC. (TY C) 1½"	GABIONS (3'X1') (GALV)	GABIONS (3'X3') (GALV)	GABIONS (6'X0.5') (GALV)	SAND FILTER SYSTEM
	SY	LF	EA	EA	TONS	TONS	TONS	CY	CY	CY	EA
620 Median Pond	–	–	–	2	–	–	–	–	20	6.7	1 (60'X64')
LakeCreek Pond 1A	–	–	–	–	–	–	–	6.6	10	–	1 (29'X30')
LakeCreek Pond 1B	–	–	–	–	–	–	–	6.6	10	–	1 (24'X30')
LakeCreek Pond 1C	–	–	–	–	–	–	–	6.6	10	–	1 (25'X30')
Hymeadow Pond 2A	–	–	–	–	–	–	–	6.6	10	–	1 (28'X30')
Hymeadow Pond 2B	–	–	–	–	–	–	–	6.6	10	–	1 (15'X30')
Hymeadow Pond 2C	–	–	–	–	–	–	–	6.6	10	–	1 (29'X30')
Hymeadow Pond 2D1	–	–	–	–	–	–	–	6.6	10	–	1 (30'X37')
Hymeadow Pond 2D2	–	–	–	–	–	–	–	6.6	10	–	1 (30'X47')
Pond Springs Pond	–	1050	2	–	–	8.3	–	–	38	10.3	1 (40'X93')
Pond Springs Detention Pond	46	2060	1	–	12	4.1	7.7	–	–	–	–
Woods Pond	–	2010	1	–	–	56.2	–	–	–	–	–
TOTAL	46	5120	4	2	12	68.6	7.7	52.8	138	17.0	10

NOTES:

( ) INCIDENTAL. FOR CONTRACTOR'S INFORMATION ONLY.

* SUBSIDIARY TO VARIOUS BID ITEMS.

Turner Collie & Braden Inc.
ENGINEERS • PLANNERS • PROJECT MANAGERS

AUSTIN | Job No. 61-99100-012 | File

©1998 TxDOT

US 183
WATER QUALITY AND DETENTION POND SUMMARY SHEET

SCALE: AS NOTED

Designed	FED. RD. DIV. NO.	STATE	FEDERAL AID PROJECT NO.		HIGHWAY NO.
KKY	6	TEXAS	NH 09(556)		US 183
Drawn	STATE DIST. NO.	COUNTY	CONTROL NO.	SECTION NO.	JOB NO.	SHEET NO.
JAM	AUS	WILLIAMSON	0151	05	072	48
Checked						
DLG						

DATE: 04/10/99
JOB No.: 72-07401-022
PATH: t:\ 07401022\drainage\wqptbl2.dgn

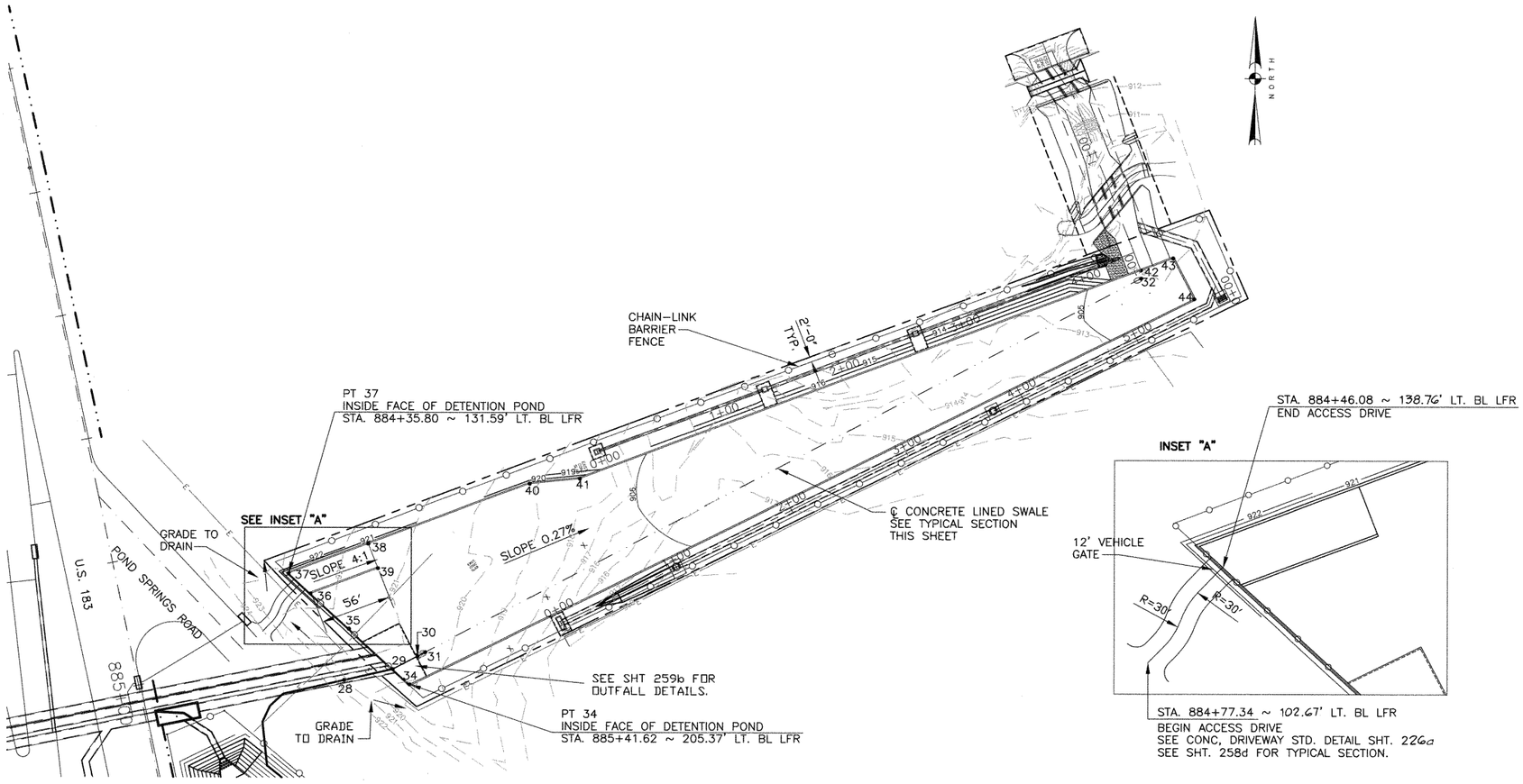

PLAN
SCALE: 1"=50'

POINT LOCATION TABLE

POINT No.	NORTH.	EAST.	ELEV. FL
	8" PVC OUTFALL PIPE		
28	295,643.89	2,801,465.30	905.55
29	295,652.98	2,801,503.61	905.48
	CONCRETE-LINED SWALE		
30	295,662.98	2,801,522.15	905.44
31	295,666.34	2,801,528.38	905.43
32	295,965.42	2,802,082.86	904.80
	DETENTION POND		
34	295,640.69	2,801,516.64	906.67
35	295,684.96	2,801,469.73	906.65
36	296,713.23	2,801,439.76	906.76
37	295,729.22	2,801,422.81	921.50
38	295,752.92	2,801,484.50	906.62
39	295,733.32	2,801,492.03	906.62
40	295,800.96	2,801,609.50	906.26
41	295,805.05	2,801,648.29	906.15
42	295,971.95	2,802,082.61	904.80
43	295,981.53	2,802,107.55	904.85
44	295,949.06	2,802,124.03	904.89

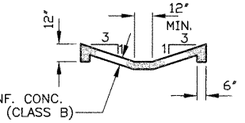

TYPICAL SECTION CONCRETE LINED SWALE
NOT TO SCALE

NOTES:
1.SEE WATER QUALITY PONDS STRUCTURAL DETAILS, SHTS 261g-261i, FOR CONC. RETAINING WALL DETAILS.

NOTE:
FOR CURRENT INFORMATION ABOUT GRAVITY & FORCE MAINS IN REFERENCE TO CHANGE ORDER #10, CONTACT CITY OF AUSTIN WATER & WASTEWATER DEPT.

STATE OF TEXAS
C. D. BILLS
83877
LICENSED PROFESSIONAL ENGINEER
5-3-99

Turner Collie & Braden Inc.
ENGINEERS • PLANNERS • PROJECT MANAGERS

Unit: AUSTIN | Job No.: 72-07401-022 | File:

Texas Department of Transportation

©1998 TxDOT

POND SPRINGS DETENTION POND

SCALE: AS NOTED

Designed	CDB	FED. RD. DIV. NO.	STATE	FEDERAL AID PROJECT NO.				HIGHWAY NO.
Checked	RAB	6	TEXAS	NH 99(556)				U.S.183
Drawn	GWS	STATE DIST. NO.	COUNTY	CONTROL NO.	SECTION NO.	JOB NO.		SHEET NO.
Checked	DLG	14	WILLIAMSON	0151	05	072		259a

DATE: 04/28/99
JOB NO. F:\72-07401-022\Ponds\sys3\det-pond.dwg

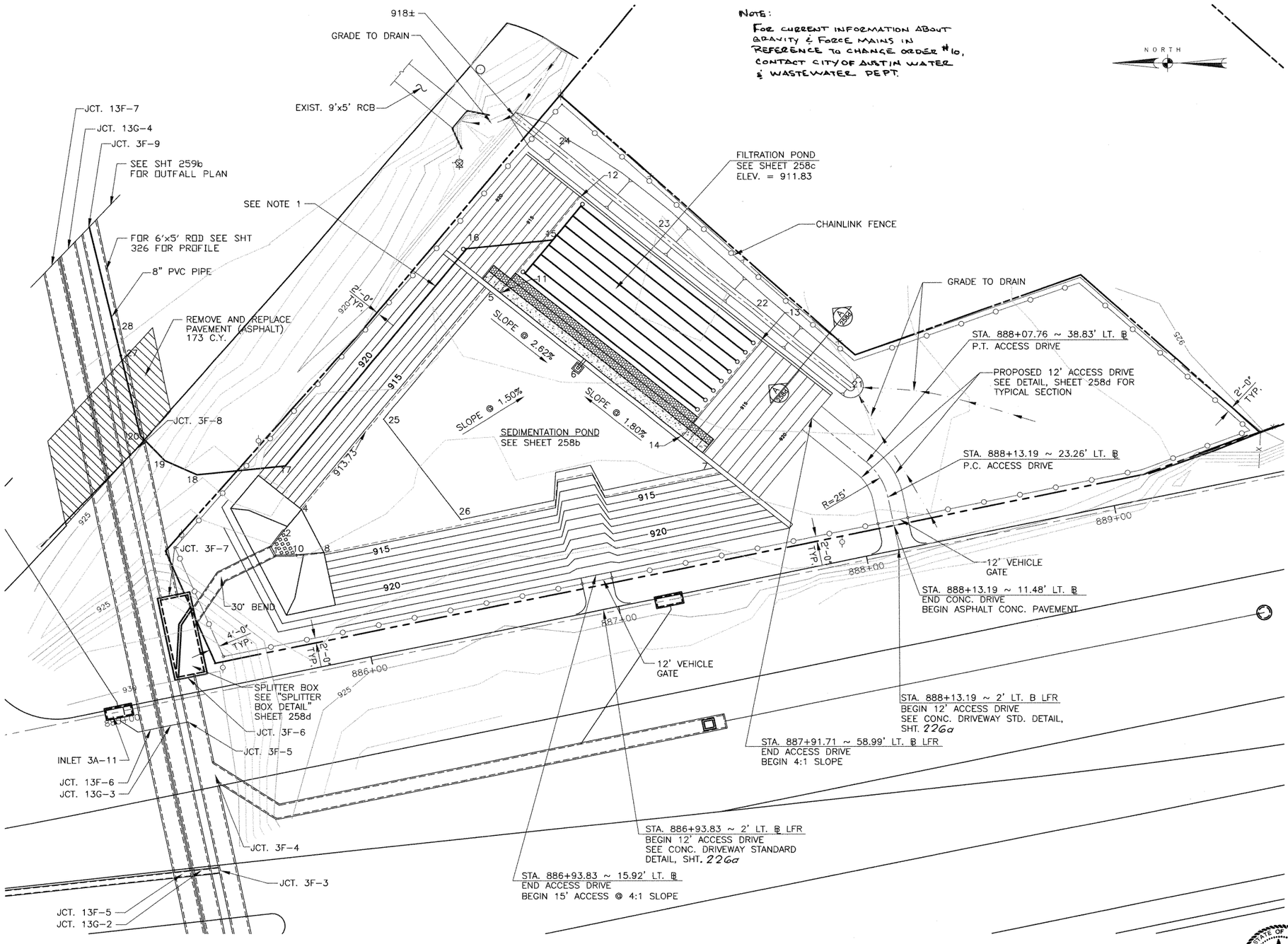

WATER QUALITY POND LAYOUT
SCALE: 1" = 20'

POINT LOCATION TABLE

POINT No.	STATION BL LT. FRT. RD.	OFFSET	ELEV. FL
SEDIMENTATION POND			
1	885+71.12	51.50' LT.	915.78
2	885+76.97	58.87' LT.	913.73
3	NOT USED		
4	885+85.48	65.75' LT.	913.67
5	886+76.65	137.14' LT.	913.00
6	887+04.05	99.54' LT.	911.84
7	887+48.23	48.95' LT.	913.00
8	885+90.56	46.85' LT.	913.67
9	NOT USED		
10	885+79.88	48.05' LT.	913.73
25	886+24.04	94.44' LT.	913.00
26	886+36.27	48.89' LT.	913.00
FILTRATION POND			
11	886+80.42	135.68' LT.	911.83
12	887+19.24	167.19' LT.	911.83
13	887+77.84	94.98' LT.	911.83
14	887+39.02	63.47' LT.	911.83
8in. PVC OUTFALL PIPE			
15	887+05.28	152.64' LT.	908.53
16	886+74.02	158.39' LT.	908.14
17	885+82.78	84.34' LT.	906.79
18	885+47.97	87.97' LT.	906.39
19	885+36.63	96.18' LT.	906.21
20	885+29.31	108.11' LT.	906.06
27	885+28.28	145.77' LT.	905.66
28	885+28.01	155.77' LT.	905.55
DRAINAGE DITCH			
21	898+07.92	69.82' LT.	920.00
22	897+76.81	108.94' LT.	919.75
23	897+45.69	148.08' LT.	919.50
24	897+14.56	187.23' LT.	919.25

NOTES:

1. CLEANOUTS SHALL BE PROVIDED EVERY 300 FT. AND AT BENDS.
2. PAVEMENT STRUCTURE SHALL BE DETERMINED BY ENGINEER.

STATE OF TEXAS
C.D. BILLS
83877
LICENSED PROFESSIONAL ENGINEER
5/14/99

Turner Collie & Braden Inc.
ENGINEERS • PLANNERS • PROJECT MANAGERS

Unit	Job No.	File
AUSTIN	72-07401-022	

Texas Department of Transportation

©1998 TxDOT

POND SPRINGS WATER QUALITY POND LAYOUT

Designed	Checked	Drawn	Checked	FED. RD. DIV. NO.	STATE	COUNTY	CONTROL NO.	SECTION NO.	JOB NO.	HIGHWAY NO. / SHEET NO.
KKY/CDB	CDB	GWS	CDB	6	TEXAS	WILLIAMSON	0151	05	072	U.S.183 / 258a

FEDERAL AID PROJECT NO. NH 99(556)

DATE: 05/11/99
JOB NO. T:\72074010222\PONDS\SYS31\S3PNDOVA.DWG

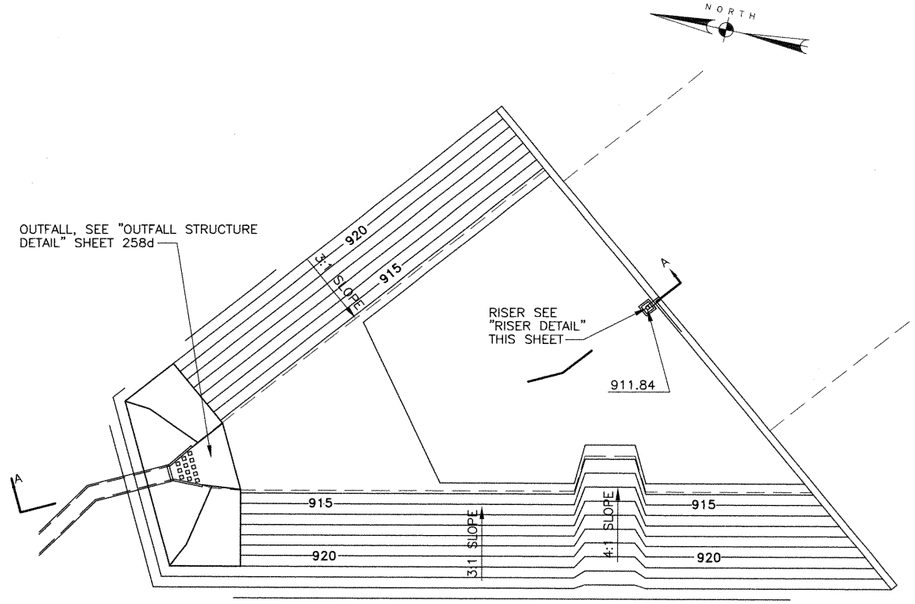

SEDIMENTATION POND PLAN
SCALE: 1" = 20'

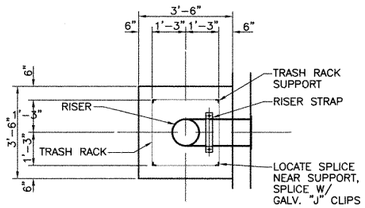

PLAN

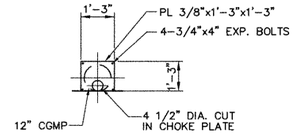

CHOKE PLATE DETAIL

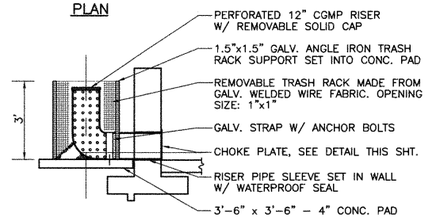

SECTION

RISER DETAIL
N.T.S.

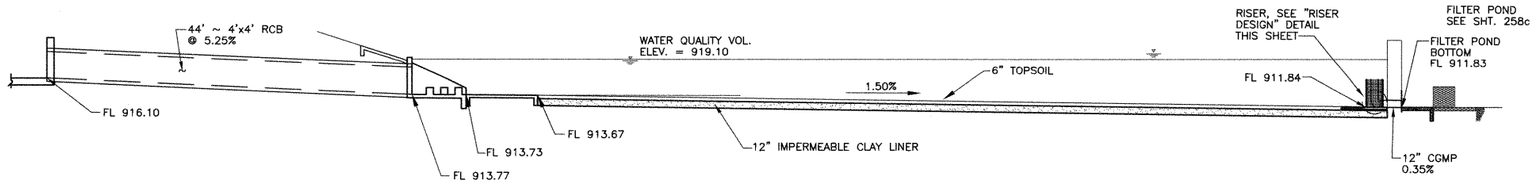

SECTION A-A
SCALE: 1" = 10'

NOTES:

1. SEE WATER QUALITY PONDS STRUCTURAL DETAILS SHT 261c FOR WALL DIMENSIONS AND REINFORCEMENT.

STATE OF TEXAS
C.D. BILLS
83877
LICENSED
PROFESSIONAL ENGINEER
C.D. Bills
5-3-99

Turner Collie & Braden Inc.
ENGINEERS • PLANNERS • PROJECT MANAGERS

AUSTIN | Job No. 72-07401-022

Texas Department of Transportation

©1998 TxDOT

POND SPRINGS SEDIMENTATION POND PLAN AND DETAILS

Designed	Checked	Dist. No.	State	Federal Aid Project No.				Highway No.
KKY/CDB	CDB	6	TEXAS	NH 99(556)				U.S.183
Drawn	Checked	State Dist. No.	County	Control No.	Section No.	Job No.		Sheet No.
GWS	CDB	14	WILLIAMSON	0151	05	072		258b

DATE: 04/28/99
JOB NO.: T:\07401022/PONDS\SYS3\S3PNDSED.DWG

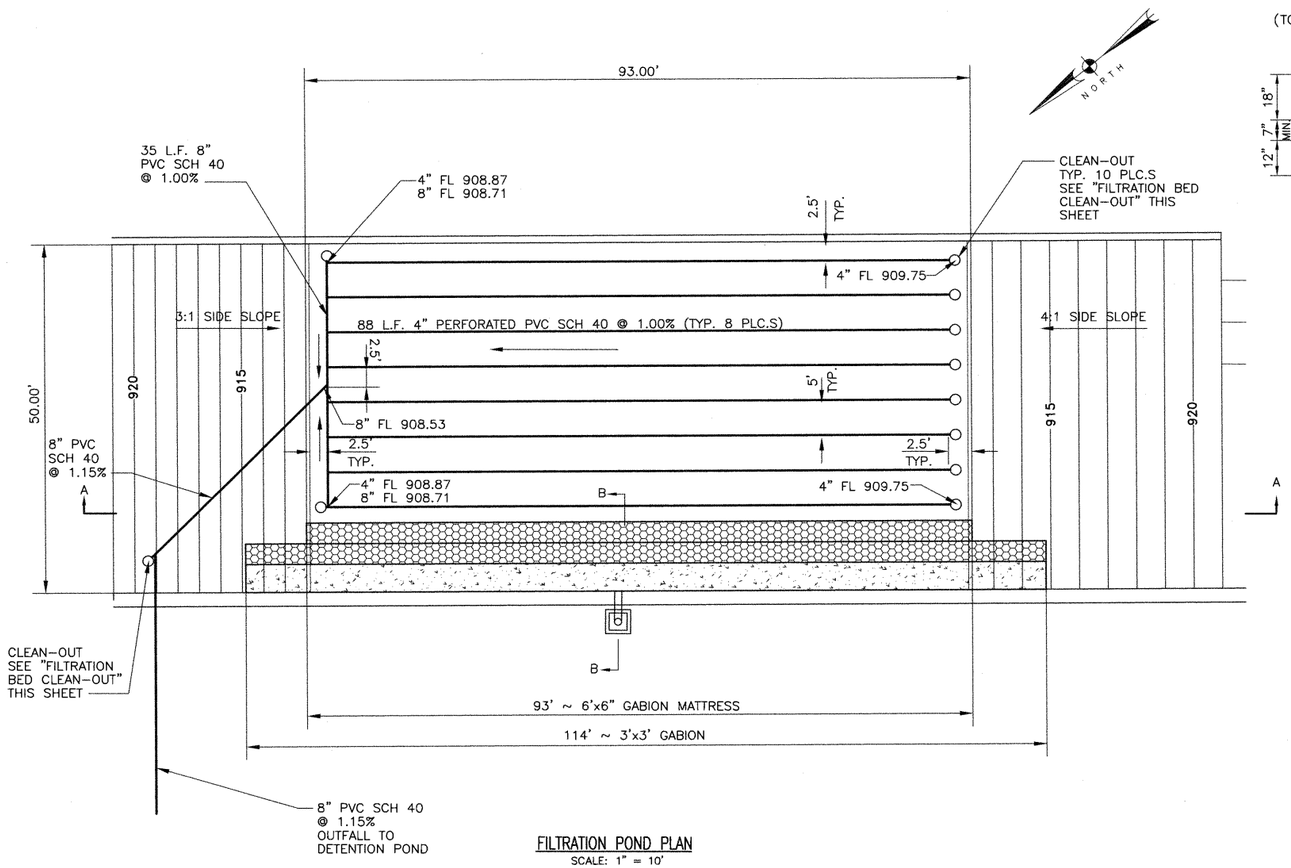

FILTRATION POND PLAN
SCALE: 1" = 10'

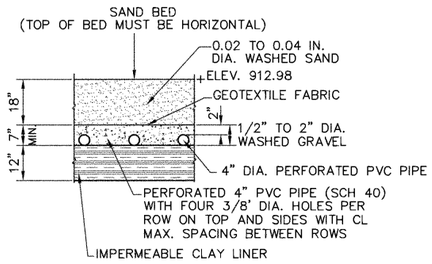

SAND FILTRATION BED SECTION
SCALE: 1/2" = 1'-0"

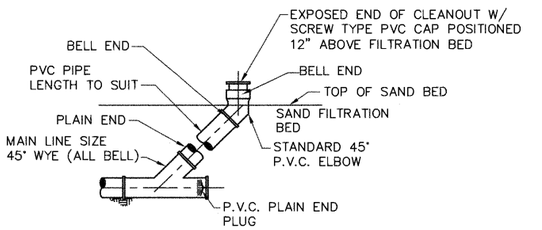

NOTE:
TO BE PLACED ON BEDDING MEETING SPECIFICATION FOR TYPE AND SIZE OF PIPE.

FILTRATION BED CLEAN-OUT
SCALE: 1/2" = 1'-0"

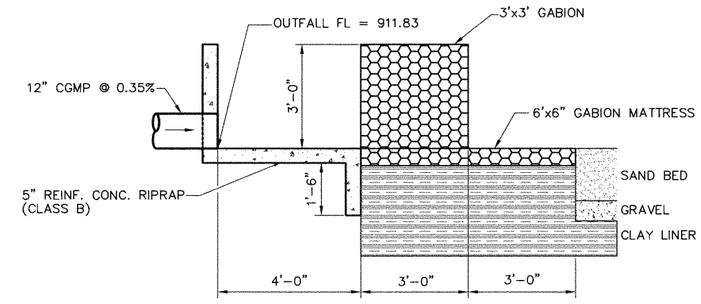

SECTION B-B
SCALE: 1/2" = 1'-0"

NOTES:
1.SEE WATER QUALITY PONDS STRUCTURAL DETAILS, SHT. 261i, FOR WALL DIMENSIONS AND REINFORCEMENT.

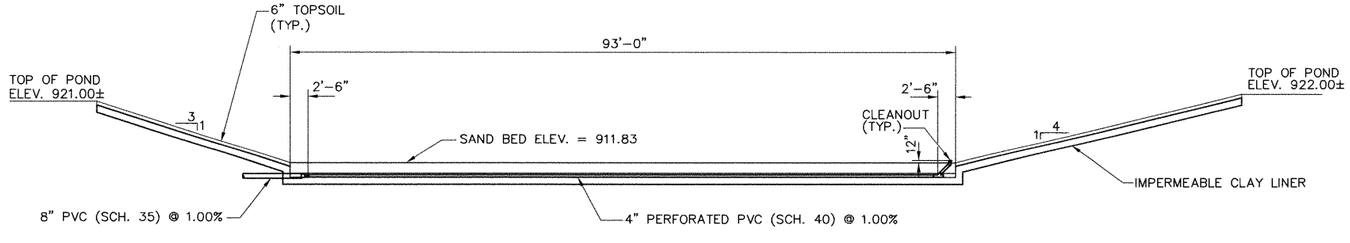

FILTRATION POND SECTION A-A
SCALE: 1" = 10'

STATE OF TEXAS
C.D. BILLS
83877
LICENSED PROFESSIONAL ENGINEER
C.D. Bills
5-3-99

Turner Collie & Braden Inc.
ENGINEERS • PLANNERS • PROJECT MANAGERS

Unit	Job No.	File
AUSTIN	72-07401-022	

Texas Department of Transportation

©1998 TxDOT

POND SPRINGS FILTRATION POND PLAN AND DETAILS

Designed	Checked	Drawn	Checked	FED. RD. DIV. NO.	STATE DIST.NO.	STATE	COUNTY	FEDERAL AID PROJECT NO. CONTROL NO.	SECTION NO.	JOB NO.	HIGHWAY NO. SHEET NO.
KKY/CDB	CDB	GWS	CDB	6	14	TEXAS	WILLIAMSON	NH 99(556) 0151	05	072	U.S.183 258c

DATE: 04/28/99
JOB NO.: T:\07401022/PONDS\SYS3\S3PNDFIL.DWG

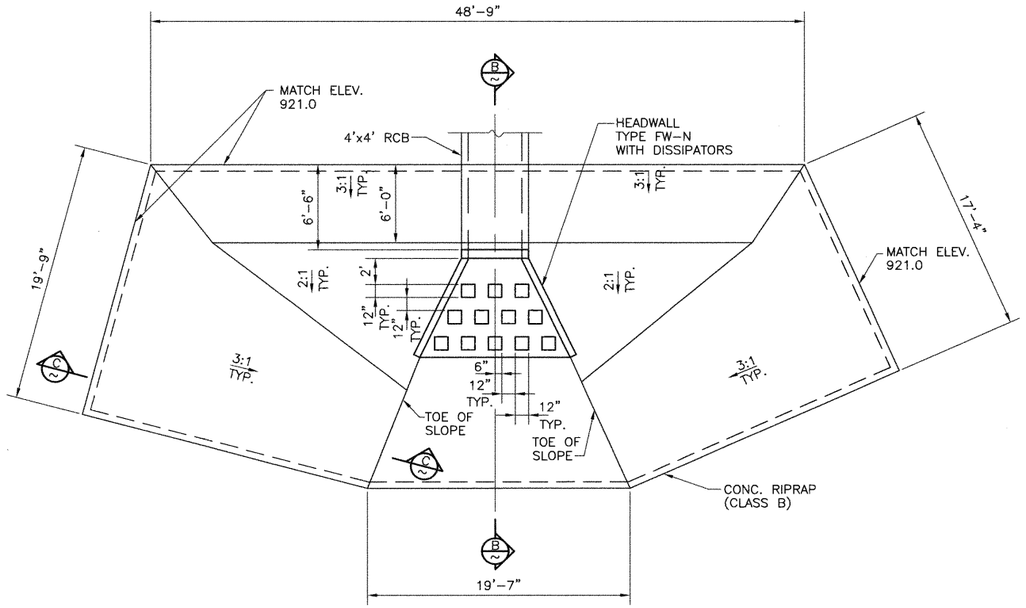

PLAN
SCALE: 3/16" = 1'-0"

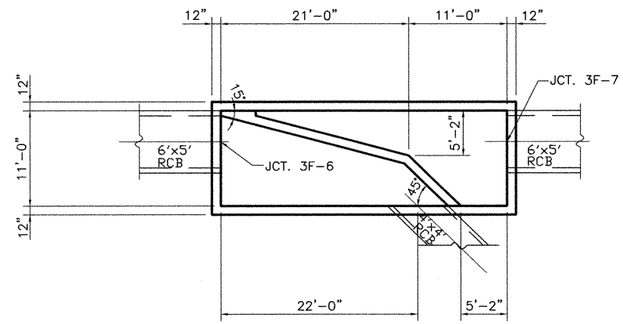

SPLITTER BOX DETAIL
SCALE: 1/8" = 1'-0"

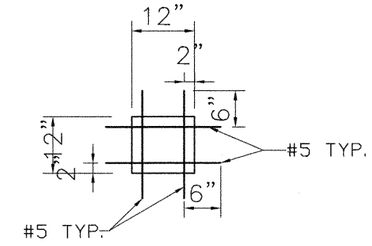

DISSIPATOR REBAR PLAN

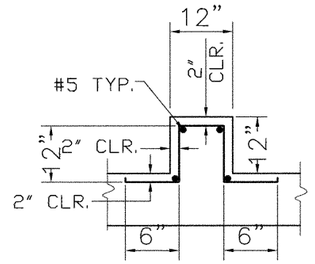

TYPICAL SECTION

DISSIPATOR DETAIL
SCALE: 3/16" = 1'-0"

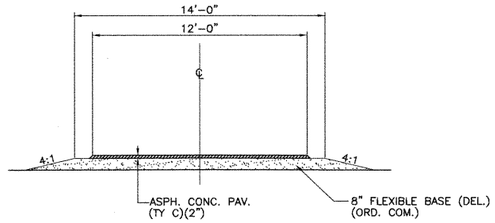

TYPICAL ACCESS ROAD SECTION
SCALE: 1/4" = 1'-0"

NOTE:

1. ELEVATION OF TOP OF ACCESS ROAD WITH RESPECT TO NATURAL/FINISHED GRADES SHALL ALLOW UNIMPEDED FLOW OF SURFACE DRAINAGE ACROSS THE ROAD AS INDICATED ON THE PLANS OR AS OTHERWISE NECESSARY TO PREVENT PONDING.
2. SEE WATER QUALITY PONDS STRUCTURAL DETAILS, SHT. 261f FOR SPLITTER BOX REINFORCEMENT.

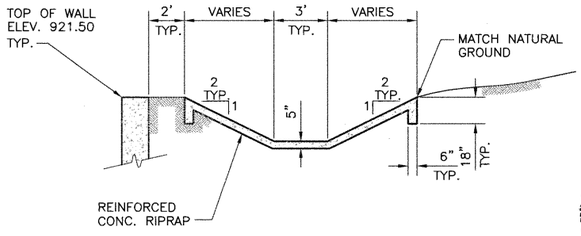

TYPICAL SECTION DRAINAGE DITCH (A 258a)
SCALE: 1/4" = 1'-0"

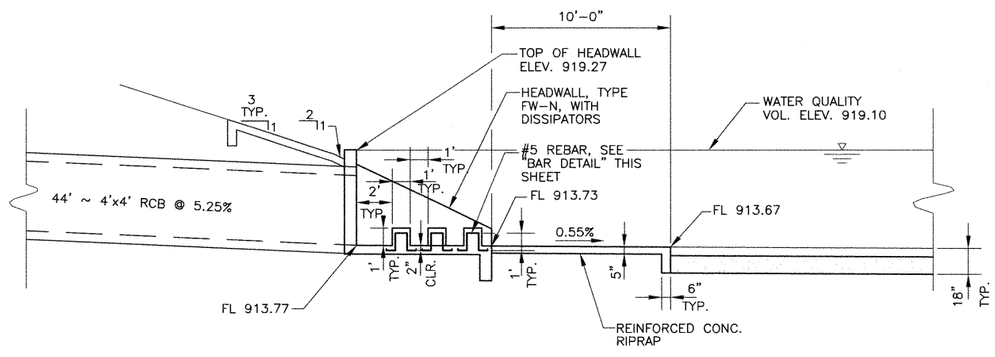

SECTION (B)
SCALE: 1/4" = 1'-0"

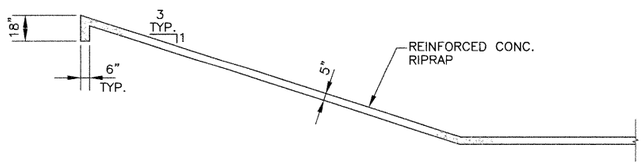

SECTION (C)
SCALE: 1/4" = 1'-0"

OUTFALL STRUCTURE

C.D. BILLS
83877
LICENSED
PROFESSIONAL ENGINEER
STATE OF TEXAS
C.D. Bills
5-3-99

Turner Collie & Braden Inc.
ENGINEERS • PLANNERS • PROJECT MANAGERS

AUSTIN | Job No. 72-07401-022

Texas Department of Transportation

©1998 TxDOT

POND SPRINGS
WATER QUALITY POND
DRAINAGE DETAILS

SCALE: AS NOTED

Designed	CDB	FED. RD. DIV. NO.	STATE	FEDERAL AID PROJECT NO.				HIGHWAY NO.
Checked	DLG	6	TEXAS	NH 99(556)				U.S.183
Drawn	GWS	STATE DIST. NO.	COUNTY	CONTROL NO.	SECTION NO.	JOB NO.		SHEET NO.
Checked	CDB	14	WILLIAMSON	0151	05	072		258d

DATE: 04/28/99
JOB NO: 72-07401-022\PONDS\SYS3\s3pndet1.dwg

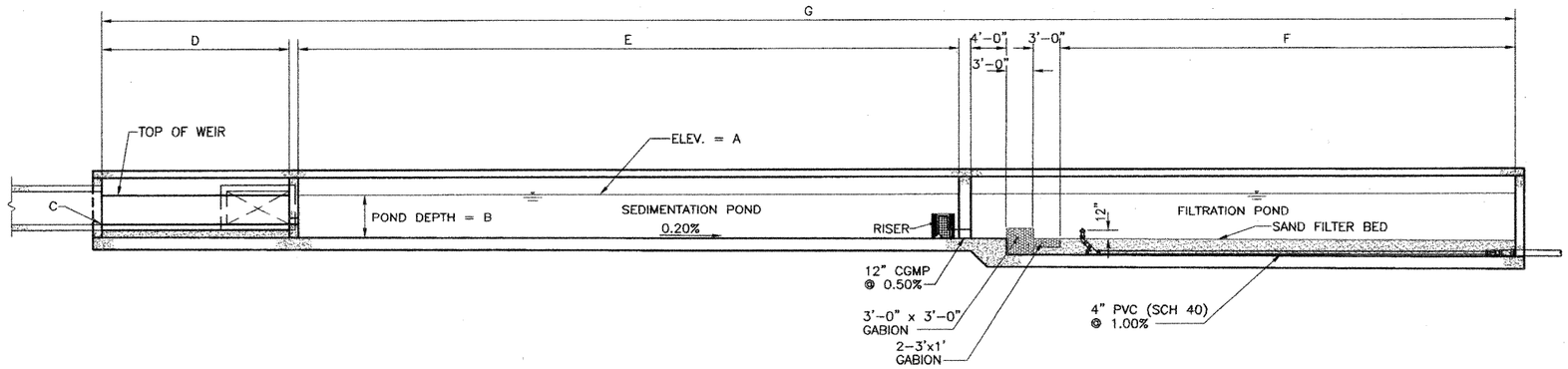

TYPICAL SECTION

SCALE: 1/8" = 1'-0"

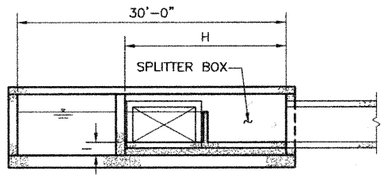

TYPICAL SECTION

SCALE: 1/8" = 1'-0"

POND	A	B	C	D ⚠1	E	F	G	H	I ⚠1	J
1A	917.78	5'-0"	914.28	N/A	96'-0"	29'-0"	158'-4"	18'-0"	N/A	2 3/8"
1B	921.00	5'-0"	918.50	14'-6"	76'-0"	24'-0"	126'-10"	10'-0" ⚠1	2'-6"	2 3/16"
1C	922.75	6'-0"	918.50	14'-6"	65'-0"	25'-0"	116'-10"	18'-0"	1'-9"	2 1/8"
2A	920.92	5'-0"	917.42	14'-6"	91'-0"	28'-0"	145'-10"	10'-0"	1'-6"	2 3/16"
2B	923.49	5'-0"	921.99	14'-6"	43'-0"	15'-0"	84'-10"	10'-0"	3'-6"	1 11/16"
2C	925.90	6'-6"	923.90	14'-6"	76'-0"	31'-0"	133'-10"	10'-0"	4'-6"	1 15/16"
2D1	923.63	5'-6"	920.63	21'-0"	109'-0"	37'-0"	179'-4"	12'-0"	2'-6"	2 5/8"
2D2	921.85	6'-0"	916.85	12'-0"	138'-0"	47'-0"	209'-3"	21'-0"	1'-0"	2 7/8"

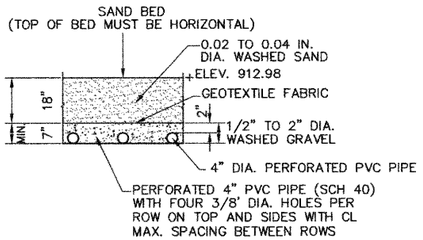

SAND FILTRATION BED SECTION

SCALE: 1/2" = 1'-0"

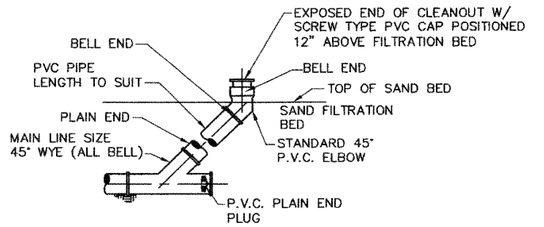

NOTE:
TO BE PLACED ON BEDDING MEETING SPECIFICATION FOR TYPE AND SIZE OF PIPE.

FILTRATION BED CLEAN-OUT

SCALE: 1/2" = 1'-0"

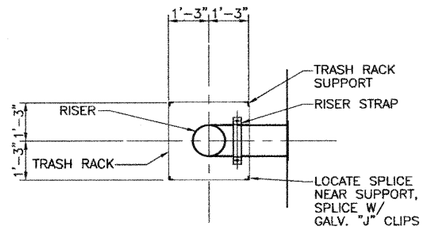

PLAN

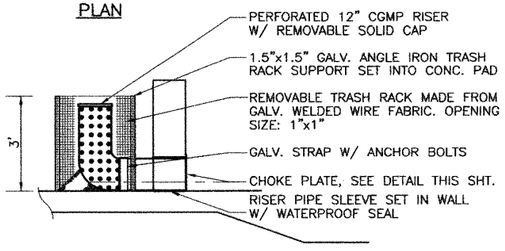

SECTION

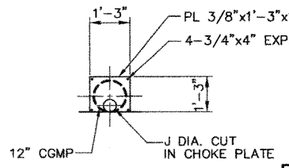

CHOKE PLATE DETAIL

RISER DETAIL

N.T.S.

STATE OF TEXAS
DAVID L. GARRETT
76626
REGISTERED
PROFESSIONAL ENGINEER
6/22/01
For Revision #1 Only

STATE OF TEXAS
REBECCA A. BILLS
82587
REGISTERED
PROFESSIONAL ENGINEER
Rebecca A. Bills
5-3-99

NOTES:

1. SEE WATER QUALITY PONDS STRUCTURAL DETAILS SHEETS 261a – 261d FOR POND DIMENSIONS AND REINFORCEMENT.
2. SEE STORM SEWER PROFILE SHEETS FOR FLOWLINES OF RCPs/RCBs AT SPLITTER BOX.

NO.	DATE	REVISION	APPROV.
4			
3			
2			
⚠1	6/01	CHANGE ORDER 10	

Turner Collie & Braden Inc.
ENGINEERS • PLANNERS • PROJECT MANAGERS

AUSTIN | Job No. 72-07401-022 | File

Texas Department of Transportation

© 1998 TxDOT

UNDERGROUND WATER QUALITY POND TYPICAL SECTIONS AND DETAILS

SCALE: AS NOTED

Designed	CH	FED. RD. DIV. NO.	STATE	FEDERAL AID PROJECT NO.				HIGHWAY NO.
Detailed	DLG	6	TEXAS	NH 99(556)				U.S.183
Checked	RP	STATE DIST. NO.	COUNTY	CONTROL NO.	SECTION NO.	JOB NO.	SHEET NO.	
Quantities	Q.	AUS	WILLIAMSON	0151	05	072	257	

0940103
2001
FILE: C:\07401022\CNGORDER\PLOT\roadway\boards\029257nw.dgn

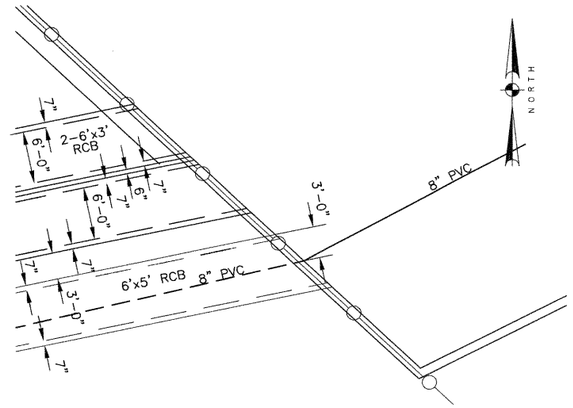

PLAN – BOX CULVERTS
SCALE: 1/8" = 1'-0"

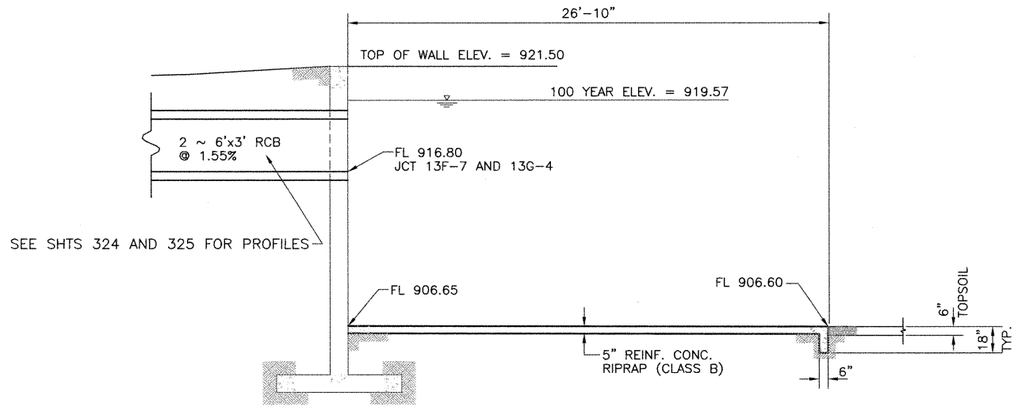

SECTION (A)
SCALE: 1/4" =1'

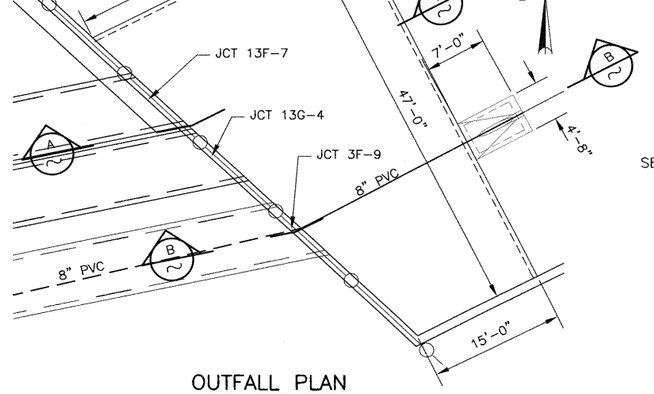

OUTFALL PLAN
SCALE: 1/8" = 1'-0"

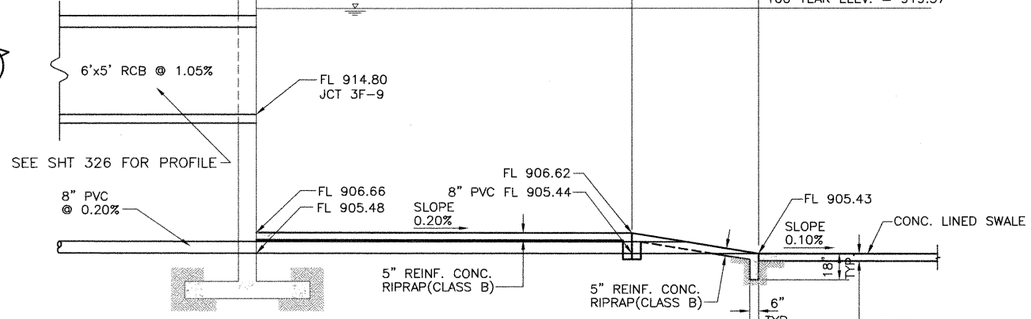

SECTION (B)
SCALE: 1/4" = 1'

NOTES:

1. SEE WATER QUALITY PONDS STRUCTURAL DETAILS, SHTS 261g–261i, FOR CONC. RETAINING WALL DETAILS.

STATE OF TEXAS
C.D. BILLS
83877
LICENSED PROFESSIONAL ENGINEER
C.D. Bills
5-3-99

Turner Collie & Braden Inc.
ENGINEERS • PLANNERS • PROJECT MANAGERS

Unit	Job No.	File
AUSTIN	72-07401-022	

Texas Department of Transportation

©1998 TxDOT

POND SPRINGS DETENTION POND DETAILS

SCALE: AS NOTED

Designed	CDB	FED. RD. DIV. NO.	STATE	FEDERAL AID PROJECT NO.				HIGHWAY NO.
Checked	RAB	6	TEXAS	NH 99(556)				U.S.183
Drawn	GWS	STATE DIST. NO.	COUNTY	CONTROL NO.	SECTION NO.	JOB NO.		SHEET NO.
Checked	DLG	14	WILLIAMSON	0151	05	072		259b

DATE: 04/28/99
JOB NO. 72-07401-022/Ponds/Sys3/det-pd-d1.dwg

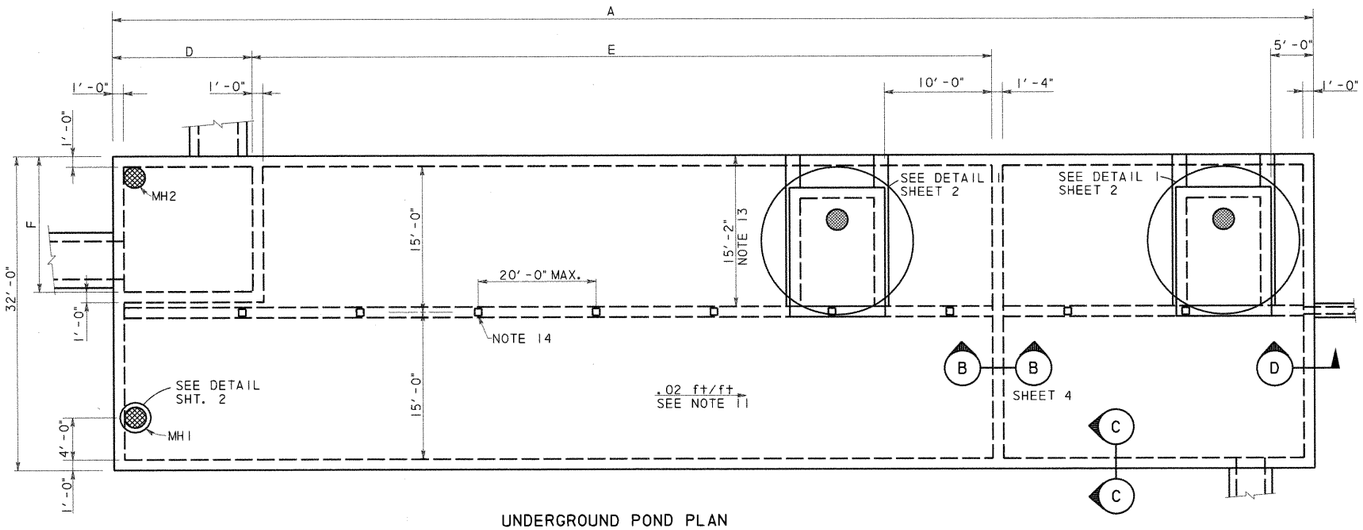

UNDERGROUND POND PLAN

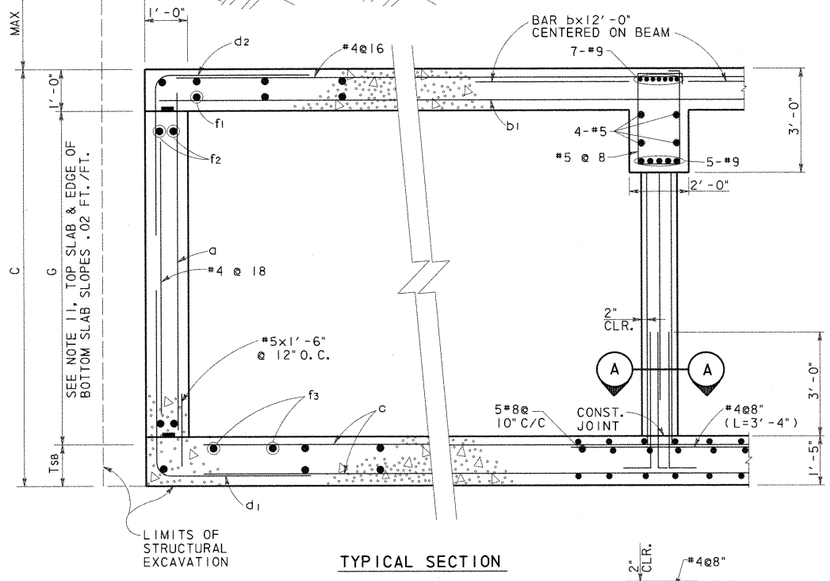

TYPICAL SECTION

SECTION C-C
N. T. S.

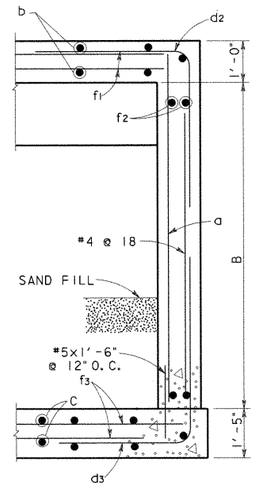

SECTION D-D
N. T. S.

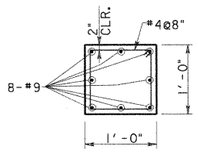

SECTION A-A
SCALE: 1"=1'-0"

UNDERGROUND POND REINFORCING TABLE																		
POND DESIGNATION	BARS a		BARS b		BARS b1		BARS c		BARS d1		BARS d2		BARS d3		BARS f1, f2, f3(#4)			
	SIZE	SPA.	SIZE	SPA.	SIZE	SPA.	SIZE	SPA.	SIZE	SPA.	SIZE	SPA.	SIZE	SPA.	f1 Spa.	f2 Spa.	f3 Spa.	
1A	#6	@12"	#8	@8"	#6	@8"	#8	@10"	#6	@6"	#6	@6"	#6	@6"	@6"	@12"	@7"	
1B	#6	@12"	#8	@8"	#6	@8"	#8	@10"	#6	@6"	#6	@6"	#6	@6"	@6"	@12"	@7"	
1C	#6	@12"	#8	@8"	#6	@8"	#8	@10"	#7	@6"	#6	@6"	#7	@6"	@6"	@12"	@7"	
2A	#6	@12"	#8	@8"	#6	@8"	#8	@10"	#6	@6"	#6	@6"	#6	@6"	@6"	@12"	@7"	
2B	#6	@12"	#8	@8"	#6	@8"	#8	@10"	#6	@6"	#6	@6"	#6	@6"	@6"	@12"	@7"	
2C	#7	@12"	#8	@8"	#6	@8"	#8	@10"	#7	@6"	#6	@6"	#8	@6"	@6"	@12"	@7"	
2D1	#7	@12"	#8	@8"	#6	@8"	#8	@10"	#7	@6"	#6	@6"	#8	@6"	@6"	@12"	@7"	
2D2	#7	@12"	#8	@8"	#6	@8"	#8	@10"	#7	@6"	#6	@6"	#8	@6"	@6"	@12"	@7"	

UNDERGROUND POND DIMENSION TABLE											
POND DESIGNATION	A	B	C	D	E	F	G			MAX FILL	AVERAGE FILL
1A	160'-4"	9'-2"	9'-3"	22'-0"	97'-0"	19'-0"	7'-0"			11'-0"	7'-6"
1B	128'-10"	9'-2"	9'-3"	15'-6"	77'-0"	11'-0"	7'-0"			8'-6"	5'-6"
1C	118'-10"	9'-8"	9'-9"	15'-6"	66'-0"	11'-0"	7'-6"			8'-3"	5'-6"
2A	147'-10"	9'-2"	9'-3"	15'-6"	92'-0"	11'-0"	7'-0"			9'-3"	6'-9"
2B	86'-10"	9'-2"	9'-3"	15'-6"	44'-0"	11'-0"	7'-0"			6'-9"	4'-9"
2C	133'-10"	10'-2"	10'-3"	15'-6"	77'-0"	11'-0"	8'-0"			4'-9"	3'-6"
2D1	181'-4"	10'-2"	10'-3"	22'-0"	110'-0"	13'-0"	8'-0"			11'-10"	7'-3"
2D2	211'-4"	10'-2"	10'-3"	13'-0"	139'-0"	22'-0"	8'-0"			9'-5"	7'-9"

GENERAL NOTES: UNDERGROUND PONDS

1. DESIGNED ACCORDING TO CURRENT AASHTO 1996 STANDARD SPECIFICATIONS.
2. DESIGNED FOR HS20 LOADING AND TO THE MAXIMUM FILL HEIGHT SHOWN.
3. ALL REINFORCING SHALL BE GRADE 60 KSI.
4. ALL CONCRETE SHALL BE CLASS "C".
5. REINFORCING BARS SHALL BE ADJUSTED TO PROVIDE A MINIMUM OF 1½" CLEAR COVER, UNLESS OTHERWISE NOTED.
6. ALL DIMENSIONS ARE IN FEET AND INCHES AND ALL MASS IS IN POUNDS UNLESS OTHERWISE NOTED.
7. SEE POND LAYOUT SHEETS FOR POND ORIENTATION AND LOCATION; PLUS THE ORIENTATION, SIZE AND LOCATION OF INCOMING AND OUTGOING DRAINAGE LINES.
8. WATERSTOPS SHALL BE HYDROPHILIC WATERSTOPS SUCH AS ADEKA MC-2010M.
9. PROVIDE 3" CLEARANCE WHERE CAST AGAINST SOIL.
10. PROVIDE CONSTRUCTION JOINTS IN WALLS AT A MAXIMUM SPACING OF 30 FOOT ON CENTER. MAXIMUM SLAB AREA TO BE PLACED WITHOUT CONSTRUCTION JOINTS IS 3000 SQUARE FEET. SLAB AND WALL CONSTRUCTION JOINTS SHALL ALIGN.
11. SEE POND LAYOUT FOR FLOWLINE. BOTTOM SLAB SHALL PROVIDE A .02 FT/FT SLOPE ALONG THE EDGE OF WALL. PERIMETER WALL HEIGHT (G) SHALL BE CONSTANT.
12. OFF SET RISER TO MISS ROOF SLAB BEAM.
13. AT UNDERGROUND PONDS 2C AND 2D2 THE ACCESS HATCH IS OPPOSITE HAND FROM WHAT IS SHOWN AND IS LOCATED FROM THE OPPOSITE WALL TO AVOID INTERFERENCE WITH THE DRAINAGE DITCH.
14. COLUMN SPACING IS 20.0 FT O.C. MAX. UNLESS NOTED OTHERWISE. THERE WILL BE NO COLUMNS WITHIN THE SPLITTER BOX, WHERE SPLITTER BOX EXTENDS TO THE ROOF BEAM OR BEYOND THE BEAM IS SUPPORTED BY THE SPLITTER BOX WALLS.
15. LAP TOP BARS @ MID SPAN AND BOTTOM BARS @ SUPPORTS.

ESTIMATED QUANTITIES*			
POND DESIGNATION	CONCRETE (CY)	REINFORCING BARS (LBS)	EXCAVATION (CY)
1A	623	144,925	
1B	505	115,855	
1C	476	109,213	
2A	572	131,682	
2B	356	82,752	
2C	536	123,427	
2D1	712	165,990	
2D2	823	191,615	

* QUANTITIES FOR CONTRACTOR'S ESTIMATE ONLY. ALL ITEMS ARE SUBSIDIERY TO THE POND ITEM.

STATE OF TEXAS
WILLY R. BURNS
44162
REGISTERED
ENGINEER
4/2/99

NO. DATE REVISION APPROVED

Turner Collie & Braden Inc.
Engineers • Planners • Project Managers

DATE SUTTON JOB NO. 62-14004-011 ADDENDUM

© 1998 Texas Department of Transportation

US 183

WATER QUALITY PONDS
STRUCTURAL DETAILS

SHEET 1 OF 11

Designed	WRB	FED. RD. DIV. NO.	STATE	FEDERAL AID PROJECT NO.				HIGHWAY NO.
Checked		6	TEXAS	NH99(556)				US 183
Drawn	MR	STATE DIST. NO.	COUNTY	CONTROL NO.	SECTION NO.	JOB NO.		SHEET NO.
Checked		14	WILLIAMSON	151	5	072		261a

UGPDTL1.DGN

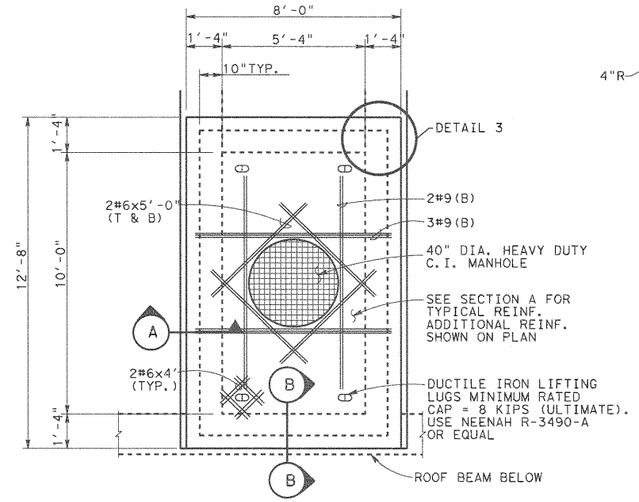

MAINTENANCE ACCESS HATCH

DETAIL 1

SCALE: 3/8" = 1'-0"

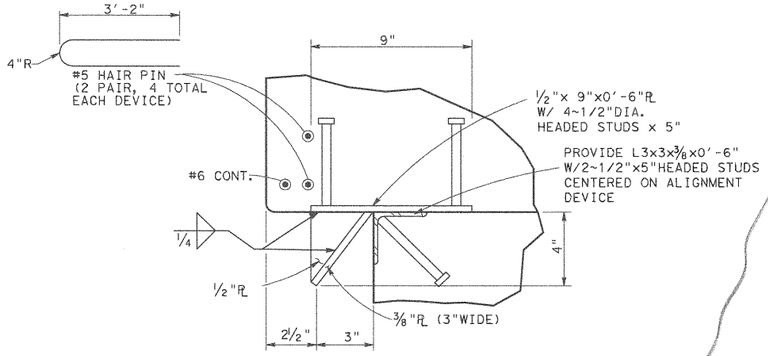

PROVIDE 8 DEVICES (GALV. AFTER FABRICATION) 2 EACH SIDE

DETAIL 2

ALIGNMENT DEVICE

SCALE: 3" = 1'-0"

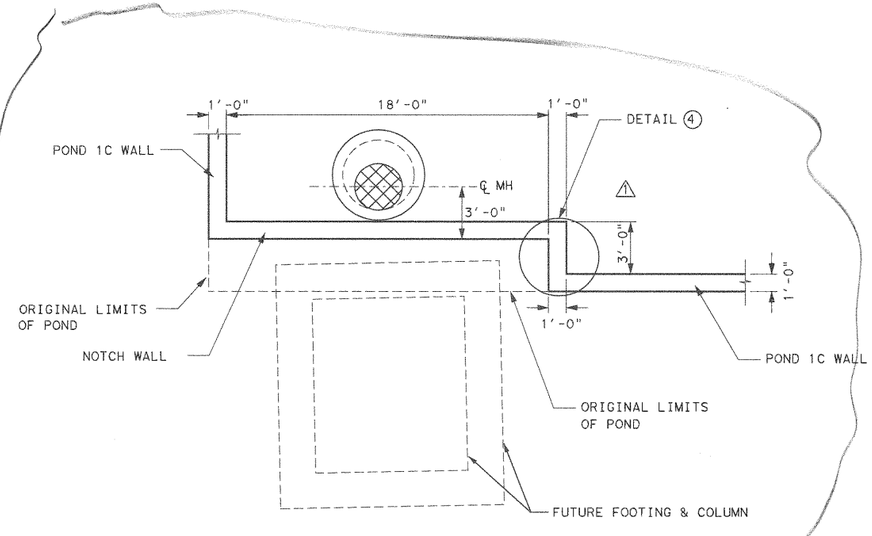

POND 1C MODIFICATION

SCALE: 3" = 1'-0"

SECTION A

SCALE: 1/2" = 1'-0"

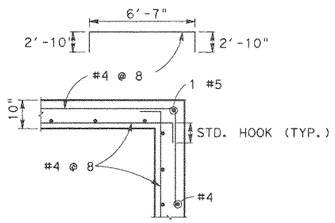

DETAIL 3

HORIZONTAL REINFORCEMENT

SCALE: 1/2" = 1'-0"

ACCESS HATCH		
POND	H1 (±)	ELEV. A
1A	8'-8"	929.20
1B	6'-7"	931.98
1C	6'-7"	931.62
2A	8'-4"	932.04
2B	5'-10"	932.20
2C	4'-10"	933.06
2D1	7'-4"	934.04
2D2	7'-11"	932.50

MANHOLE TABLE		
POND	H2	H3
1A	9'-0"	5'-0"
1B	9'-0"	4'-0"
1C	8'-0"	4'-0"
2A	9'-0"	4'-0"
2B	7'-0"	4'-0"
2C	3'-0"	5'-0"
2D1	10'-0"	4'-0"
2D2	7'-0"	5'-0"

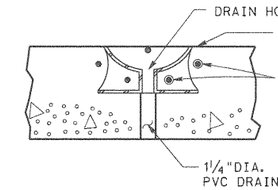

SECTION B

SCALE: 1"= 1'-0"

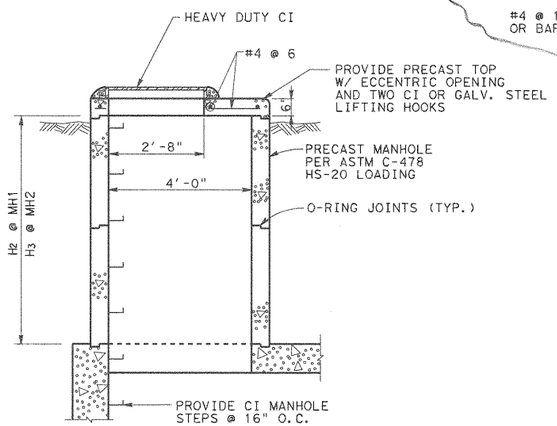

MANHOLE DETAIL

SCALE: 1/2" = 1'-0"

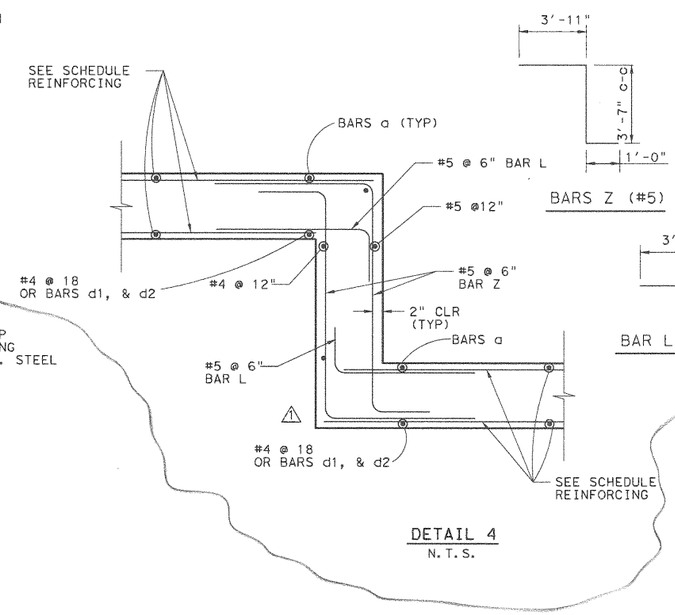

DETAIL 4

N.T.S.

STATE OF TEXAS
WALLY R. BURNS
44162
REGISTERED PROFESSIONAL ENGINEER
Wally R Burns
01/29/01

1	JAN. 26 01	ADD NOTCH	WRB
NO.	DATE	REVISION	APPROVED

Turner Collie & Braden Inc.
Engineers • Planners • Project Managers

TRANSPORTATION | Unit | Job No. 81-07401-024 | Approved

© 1998 Texas Department of Transportation

US 183
WATER QUALITY PONDS
STRUCTURAL DETAILS

SCALE: AS NOTED — SHEET 2 OF 11

Designed	Checked	Drawn	Checked	FED. RD. DIV. NO.	STATE	FEDERAL AID PROJECT NO.				HIGHWAY NO.
WRB		MR		6	TEXAS	NH99(556)				US 183
				STATE DIST. NO.	COUNTY	CONTROL NO.	SECTION NO.	JOB NO.		SHEET NO.
				14	WILLIAMSON	151	5	072		261b

UGPDT2.DGN

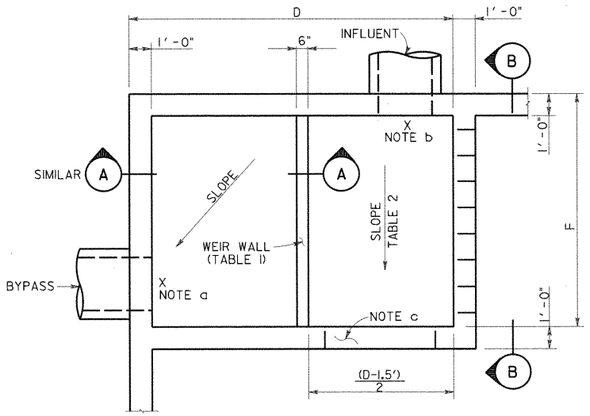

SEE TABLE SHEET I OF II
FOR DIMENSIONS D & F

SPLITTER BOX PLAN (POND 2D2)

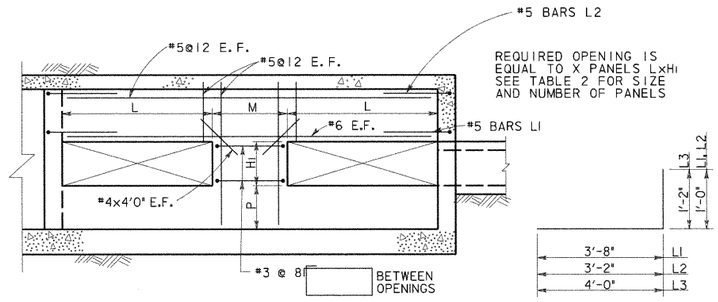

SECTION B

BARS L

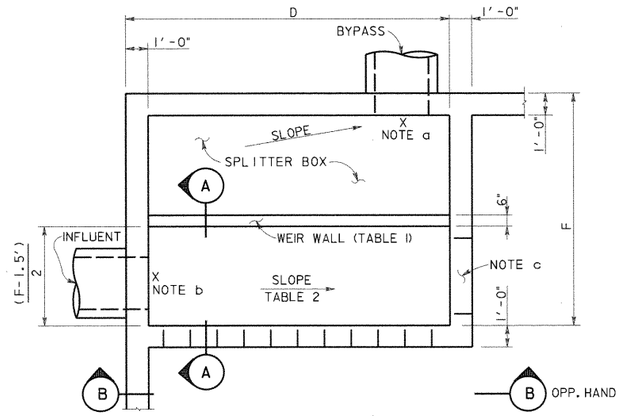

SEE TABLE SHEET I OF II
FOR DIMENSIONS D & F

SPLITTER BOX PLAN (TYPICAL)

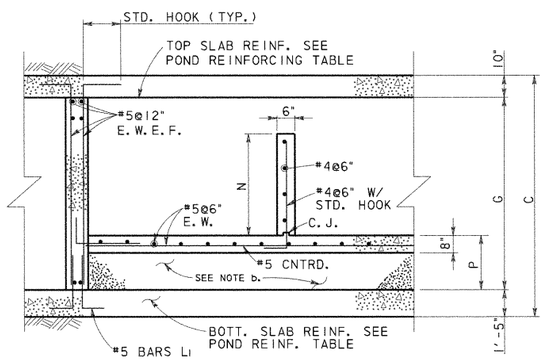

SECTION A

TABLE I BYPASS OUTFALL				
POND	BYPASS LINE ELEVATION	BYPASS WEIR		
		TOP OF WALL ELEV.	N*	P
1A	914.23	917.78	3'-6"	1'-6"
1B	918.44	921.00	2'-6"	2'-6"
1C	918.39	922.75	4'-3"	1'-9"
2A	917.38	920.92	3'-6"	1'-6"
2B	921.92	923.49	1'-6"	3'-6"
2C	923.82	925.90	2'-0"	4'-6"
2D1	920.53	923.63	3'-0"	2'-6"
2D2	916.71	921.85	5'-0"	1'-0"

*N IS MINIMUM DIMENSION, SPLITTER BOX FLOOR SLOPES, HOLD TOP OF WEIR WALL CONSTANT.

TABLE 2 INFLUENT LINE						
POND	INFLUENT ELEV.	SLOPE %	INFLUENT WALL			
			OPENINGS X	M	L	HI
1A	914.28	0.29	4	3'-0"	3'-0"	2'-6"
1B	918.50	0.48	3	2'-9"	3'-0"	1'-6"
1C	918.50	0.85	3	2'-9"	3'-0"	1'-6"
2A	917.42	0.33	3	2'-9"	3'-0"	1'-6"
2B	921.99	0.54	1	0	14'-8"	0'-9"
2C	923.90	0.62	3	2'-9"	3'-0"	1'-0"
2D1	920.63	0.53	3	6'-0"	3'-0"	2'-0"
2D2	916.85	0.78	4	3'-8"	2'-6"	2'-0"

NOTES:

a. SEE TABLE I THIS SHEET FOR OUT FLOW ELEVATION. SLOPE SLAB FROM OVERFLOW WEIR TO OUTFALL.

b. SEE TABLE 2 FOR INFLUENT ELEVATION. TOP OF SPLITTER BOX SLAB TO MATCH INFLOW ELEVATION. AT POND 2D1 THE ELEVATION SHOWN REPRESENTS A 6" DROP FROM THE INFLUENT FLOWLINE. CONTRACTOR MAY USE CEMENT STABILIZED SAND UNDER THE SLAB OR PLACE CONCRETE FOR THE FILL.

c. PROVIDE 3'x .75' OPENING AT BOTTOM OF SPLITTER BOX WALL AT END OF CHANNEL.

STATE OF TEXAS
WILLY R. BURNS
54103
REGISTERED
PROFESSIONAL ENGINEER
4/28/99

NO.	DATE	REVISION	APPROVED

Turner Collie & Braden Inc.
Engineers • Planners • Project Managers

SUTTON — Job No. 62-14004-011

© 1998 Texas Department of Transportation

US 183
WATER QUALITY PONDS
STRUCTURAL DETAILS

SCALE: AS NOTED — SHEET 3 OF 11

Designed	WRB	FED. RD. DIV. NO.	STATE	FEDERAL AID PROJECT NO.				HIGHWAY NO.
Checked		6	TEXAS	NH99(556)				US 183
Drawn	MR	STATE DIST. NO.	COUNTY	CONTROL NO.	SECTION NO.	JOB NO.		SHEET NO.
Checked		14	WILLIAMSON	151	5	072		261c

UGPDT3.DGN

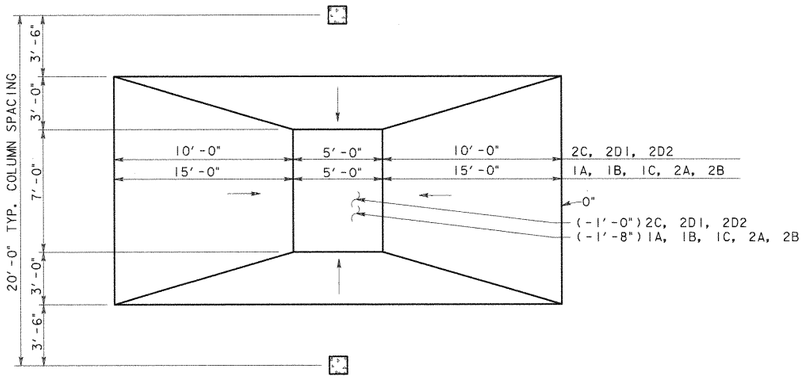

PLAN

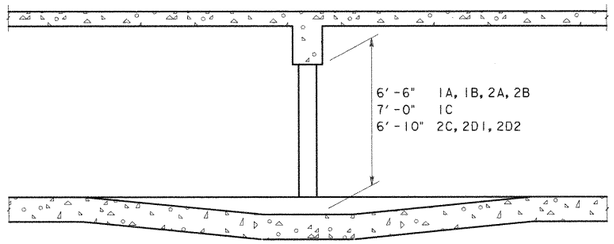

SECTION

REINFORCING LAP SPLICE & EMBEDMENT SCHEDULE						
BAR SIZE	MIN LAP LENGTH		MIN EMBEDMENT LENGTH			
	TOP BARS	OTHER BARS	TOP BARS		OTHER BARS	
			STR.	STD. HOOK	STR.	STD. HOOK
4	24"	20"	17"	9"	12"	7"
5	30"	24"	21"	10"	15"	8"
6	36"	28"	25"	10"	18"	8"
8	58"	41"	42"	15"	30"	12"

PROVIDE ONE CROSS OVER DETAIL FOR E ≤ 80'
PROVIDE TWO CROSS OVER DETAILS FOR E > 80'

CROSS OVER DETAIL
SCALE: 1/4" = 1'-0"

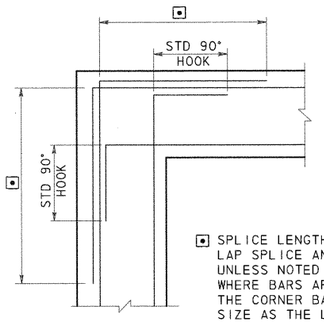

⊡ SPLICE LENGTH SEE REINFORCING LAP SPLICE AND EMBEDMENT TABLES. UNLESS NOTED OTHERWISE ON DWGS WHERE BARS ARE DIFFERENT SIZE THE CORNER BAR SHALL BE SAME SIZE AS THE LARGER BAR

CORNER REINFORCING
FOR WALLS OR GRADE BEAMS

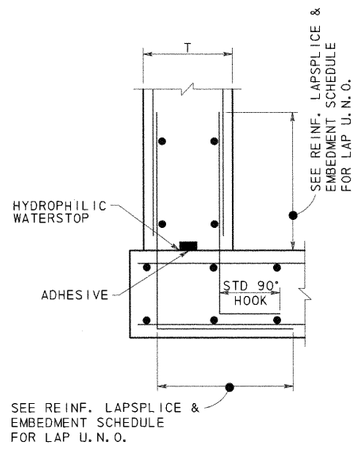

CONSTRUCTION JOINT
BASE OF WALLS

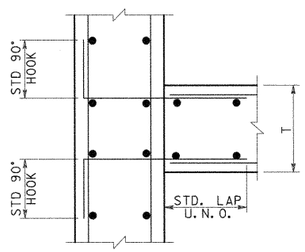

CONSTRUCTION JOINT
WALL INTERSECTIONS

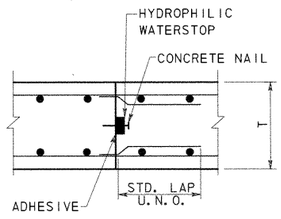

CONSTRUCTION JOINT
SLABS

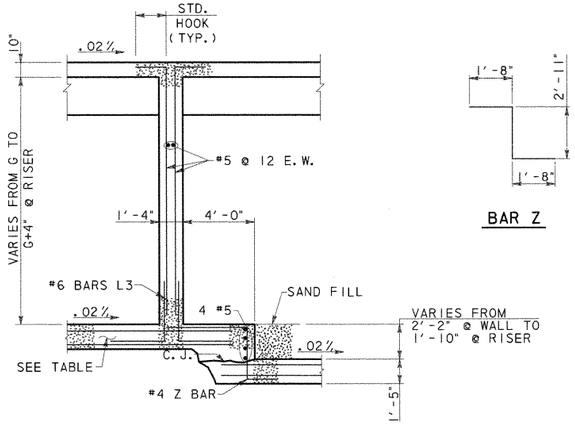

SECTION B

BAR Z

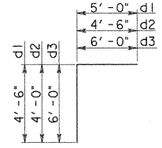

BARS D

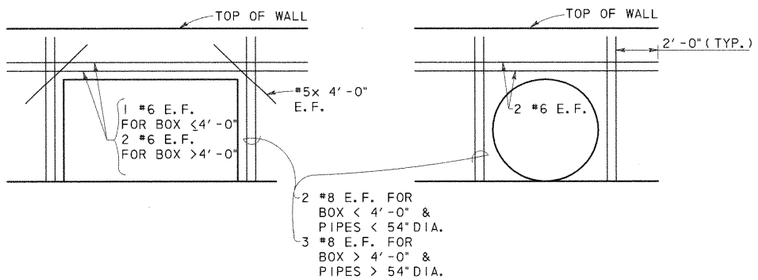

ADDITIONAL REINFORCING @ OPENINGS



NO.	DATE	REVISION	APPROVED

Turner Collie & Braden Inc.
Engineers • Planners • Project Managers

DATE: SUTTON | JOB NO. 62-14004-011 | APPROVED

© 1998 Texas Department of Transportation

US 183
WATER QUALITY PONDS
STRUCTURAL DETAILS

SCALE: AS NOTED | SHEET 4 OF 11

DESIGNED	CHECKED	DRAWN	CHECKED	FED. RD. DIV. NO.	STATE DIST. NO.	STATE	COUNTY	FEDERAL AID PROJECT NO. CONTROL NO.	SECTION NO.	JOB NO.	SHEET NO.	HIGHWAY NO.
WRB		MR		6	14	TEXAS	WILLIAMSON	NH99(556) 151	5	072	261d	US 183

UGPDT4.DGN

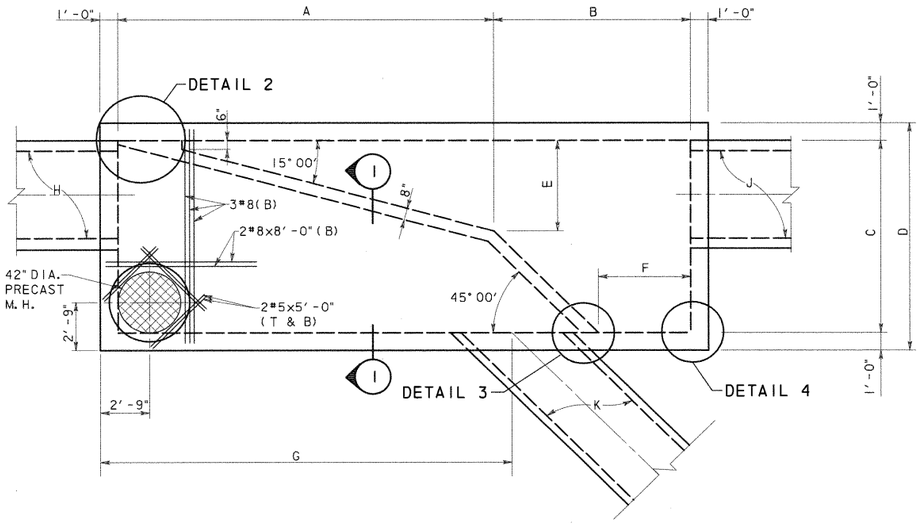

SPLITTER BOX DIMENSION TABLE

BOX LOCATION	A	B	C	D	E	F	G	H	J	K
POND SPRINGS	21'-0"	11'-0"	11'-0"	13'-0"	5'-2"	5'-2"	22'-0"	6x5 RCB	6x5 RCB	4x4 RCB
620 LEFT SIDE	13'-9"	8'-9"	8'-0"	10'-0"	3'-2"	4'-1"	13'-7"	*48" RCP	4x4 RCB	48" RCP

*48" RCP @ 15° SKEW
SEE DRAINAGE DETAIL SHEET.

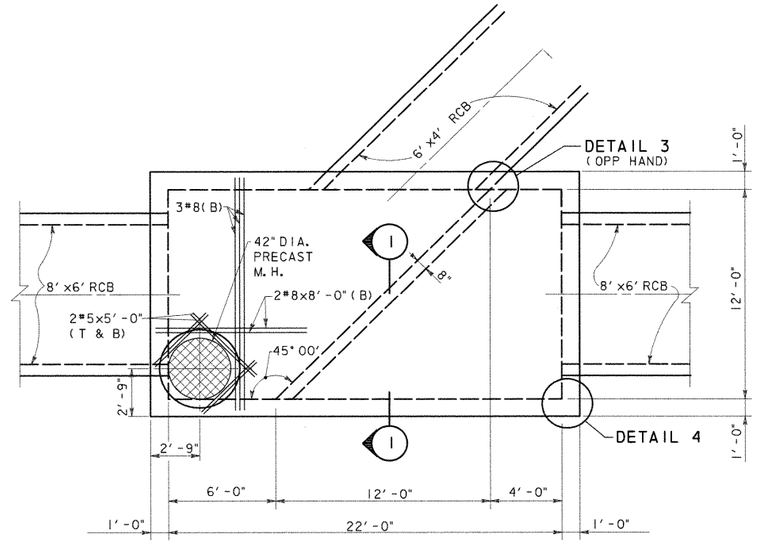

620 RIGHT SIDE
PLAN VIEW
SCALE: 1/4" = 1'-0"

ESTIMATED QUANTITIES			
BOX	CONCRETE (YD^3) *	REINFORCING (LBS) *	STRUCTURAL EXCAVATION (YD)
POND SPRINGS	56.8	7,964	
620 LEFT	32.5	4,096	
620 RIGHT	48.8	5,877	

* QUANTITIES FOR CONTRACTOR'S ESTIMATE ONLY. ALL ITEMS ARE SUBSIDIARY TO THE SPLITTER BOX.

PLAN VIEW
SCALE: 1/4" = 1'-0"

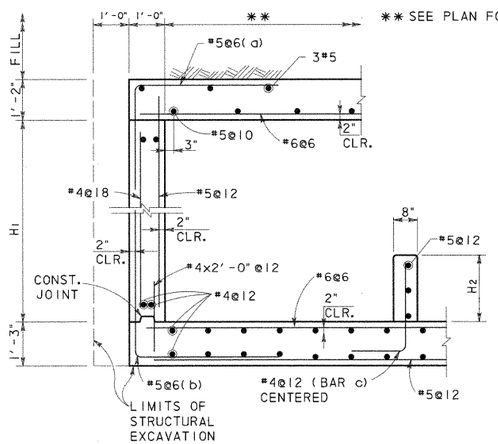

SECTION 1
SCALE: 1/2" = 1'-0"

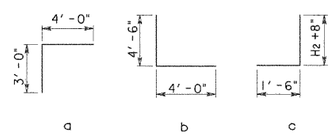

BOX LOCATION	H1	H2
POND SPRINGS	5'-6"	3'-0 1/2"
620 LEFT SIDE	4'-6"	2'-6"
620 RIGHT SIDE	6'-8"	1'-3"

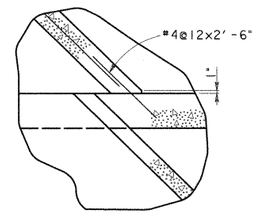

DETAIL 3
SCALE: 1/2" = 1'-0"

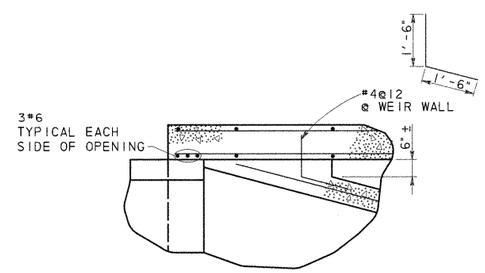

DETAIL 2
SCALE: 1/2" = 1'-0"

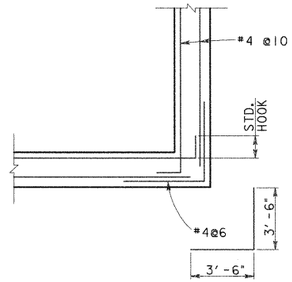

DETAIL 4
SCALE: 1/2" = 1'-0"

GENERAL NOTES:

1. DESIGNED ACCORDING TO CURRENT AASHTO 1996 STANDARD SPECIFICATIONS.
2. DESIGNED FOR HS20 LOADING AND TO THE MAXIMUM FILL HEIGHT SHOWN.
3. ALL REINFORCING SHALL BE GRADE 60 KSI.
4. ALL CONCRETE SHALL BE CLASS "C".
5. ALL DIMENSIONS ARE IN FEET AND INCHES AND ALL MASS IS IN POUNDS UNLESS OTHERWISE NOTED.



NO.	DATE	REVISION	APPROVED

Turner Collie & Braden Inc.
Engineers • Planners • Project Managers

DATE: SUTTON | JOB NO. 62-14004-011 | APPROVED

© 1998 Texas Department of Transportation

US 183
WATER QUALITY PONDS
STRUCTURAL DETAILS

SCALE: AS NOTED | SHEET 6 OF 11

Designed	WRB	FED. RD. DIV. NO.	STATE	FEDERAL AID PROJECT NO.				HIGHWAY NO.
Checked		6	TEXAS	NH99(556)				US 183
Drawn	MR	STATE DIST. NO.	COUNTY	CONTROL NO.	SECTION NO.	JOB NO.		SHEET NO.
Checked		14	WILLIAMSON	151	5	072		261f

UGPDT6.DGN

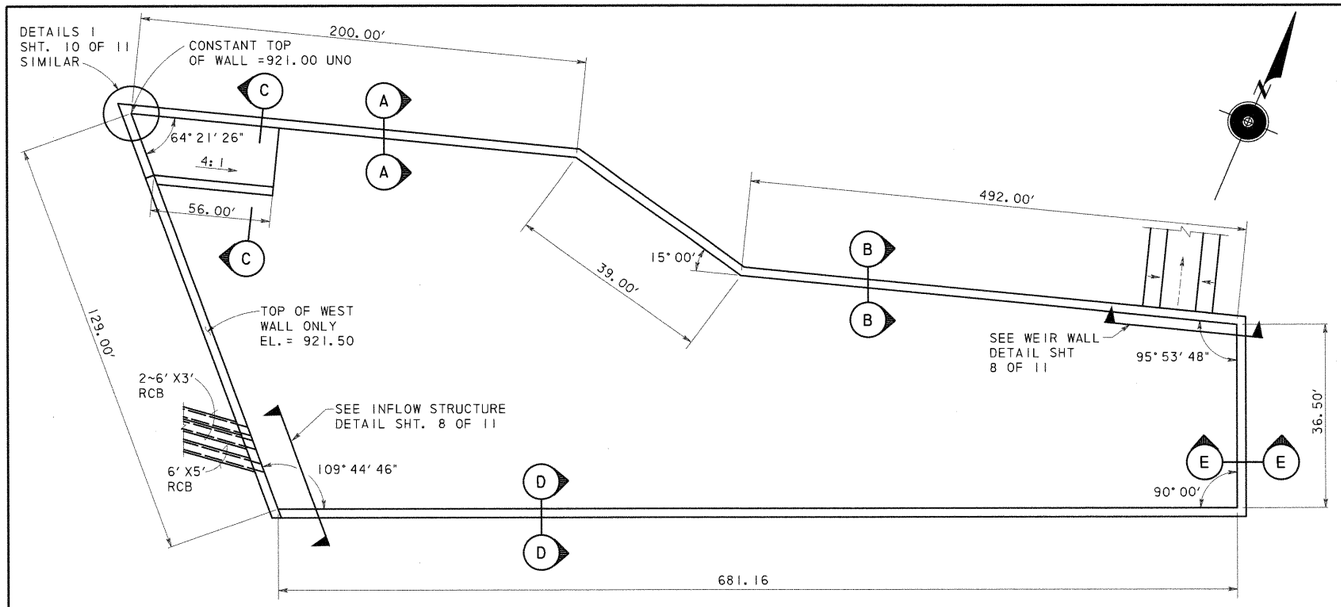

SYSTEM 3 DETENTION POND PLAN

ESTIMATED QUANTITIES (SECTION A)		
CONCRETE (YD^3) *	REINFORCING (LBS) *	** SQ. FT.
2,626	771,900	24,431

* QUANTITIES FOR CONTRACTOR'S ESTIMATE ONLY.

** EXPOSED FACE

*** WALL REINFORCING FOR 32' PANEL (SECT. A)									
A1 ~ 26 #5 @ 15" c-c		A2 ~ 25 #6 @ 15" c-c		A3 ~ 25 #7 @ 15" c-c		A4 ~ 26 #9 @ 15" c-c		A5 ~ 25 #9 @ 15" c-c	
Lgth	lb	Lgth	lb	Lgth	lb	Lgth	lb	Lgth	lb
129	292	145	455	218	928	188	1384	118	837

*** ONE SIDE SHOWN, BARS A BOTH SIDES

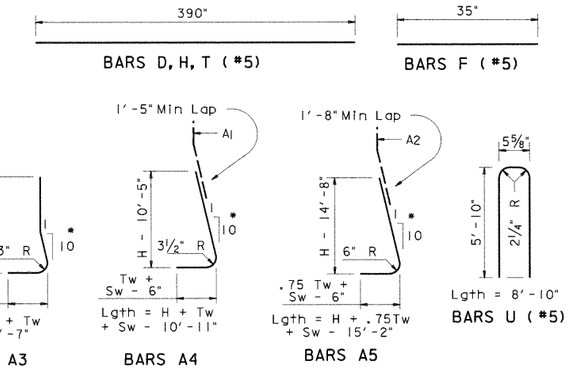

* A BARS ARE STRAIGHT IN FRONT FACE.

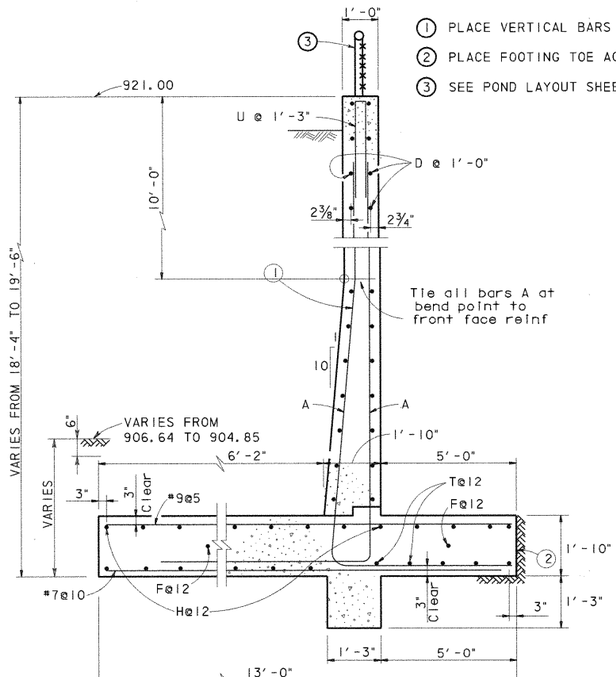

SECTION A-A
SCALE: ½" = 1'-0"

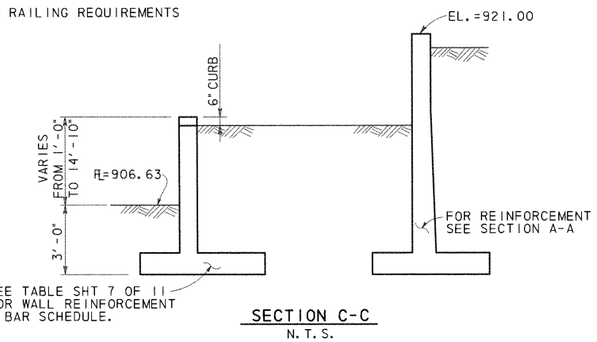

SECTION C-C
N.T.S.

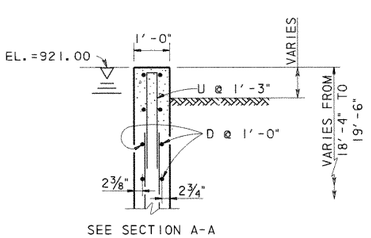

SEE SECTION A-A FOR REST OF DETAIL

SECTION D-D
SCALE: ½" = 1'-0"

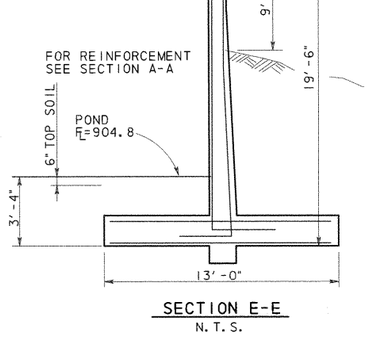

SECTION E-E
N.T.S.

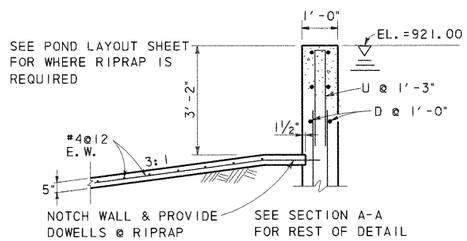

SECTION B-B
SCALE: ½" = 1'-0"

ELEVATION

GENERAL NOTES:

1. DESIGNED ACCORDING TO CURRENT AASHTO 1996 STANDARD SPECIFICATIONS.
2. DESIGNED FOR HS20 LOADING AND EQUIVALENT SOIL PRESSURE OF 60 PCF.
3. ALL REINFORCING SHALL BE GRADE 60 KSI.
4. ALL CONCRETE SHALL BE CLASS "A".
5. REINFORCING BARS SHALL BE ADJUSTED TO PROVIDE A MINIMUM OF 1½" CLEAR COVER.
6. ALL DIMENSIONS ARE IN FEET AND INCHES AND ALL MASS IS IN POUNDS UNLESS OTHERWISE NOTED.
7. CONSTRUCTION JOINT SHALL BE AT 32 FT. MAX. OC. PROVIDE CONSTRUCTION AT 15' MAX FROM EACH CORNER. CORNER CLOSURES SHALL BE PLACED LAST.
8. PROVIDE AN EXPANSION JOINT AFTER MAXIMUM OF 3 PANELS.
9. SEE SHEET 11 OF 11 FOR CONSTRUCTION AND EXPANSION JOINT DETAILS.

STATE OF TEXAS
WALLY R. BURNS
44162
REGISTERED PROFESSIONAL ENGINEER
4/28/99

NO.	DATE	REVISION	APPROVED

Turner Collie & Braden Inc.
Engineers • Planners • Project Managers

SUTTON | Job No. 62-14004-011 | Approved

© 1998 Texas Department of Transportation

US 183
WATER QUALITY PONDS
STRUCTURAL DETAILS

SCALE: AS NOTED | SHEET 7 OF 11

Designed	Checked	Drawn	Checked	FED. RD. DIV. NO.	STATE DIST. NO.	STATE	COUNTY	CONTROL NO.	SECTION NO.	JOB NO.	HIGHWAY NO. / SHEET NO.
WRB		MR		6	14	TEXAS	WILLIAMSON	151	5	072	US 183 / 261g

FEDERAL AID PROJECT NO. NH99(556)

UGPDT7.DGN

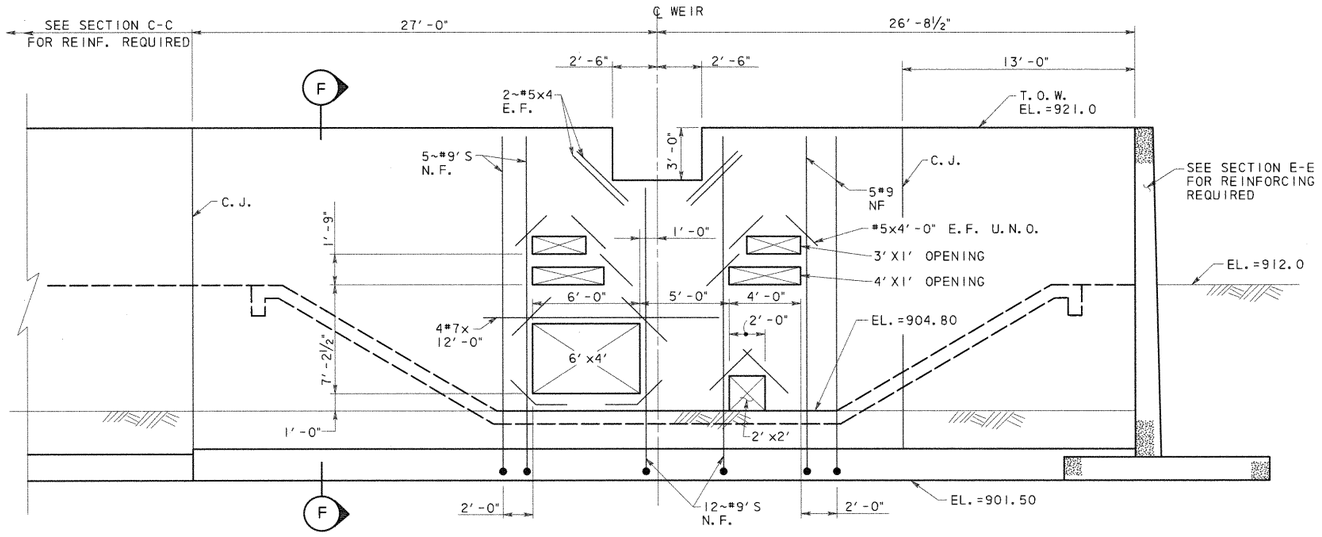

ADDITIONAL REINFORCING SHOWN, SEE SECTION F FOR TYPICAL REINF.

WEIR WALL DETAIL

SCALE: ¼" = 1'-0"

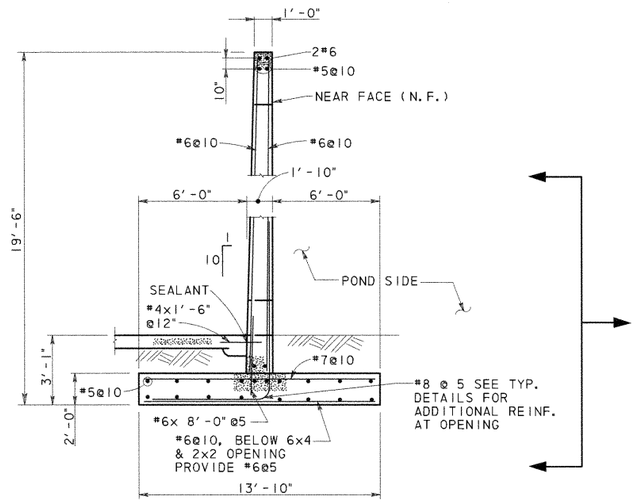

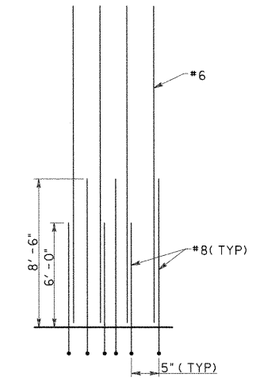

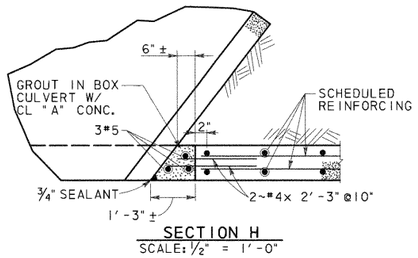

SECTION H

SCALE: ½" = 1'-0"

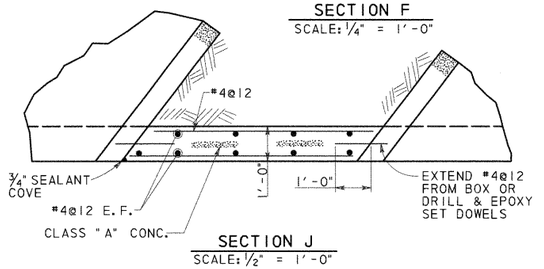

SECTION J

SCALE: ½" = 1'-0"

SECTION F

SCALE: ¼" = 1'-0"

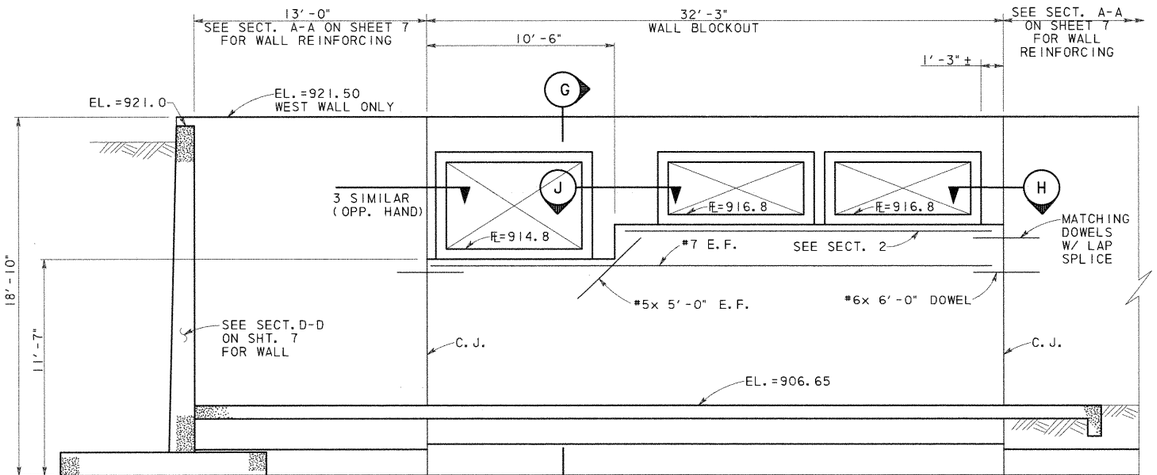

INFLOW STRUCTURE DETAIL

SCALE: ¼" = 1'-0"

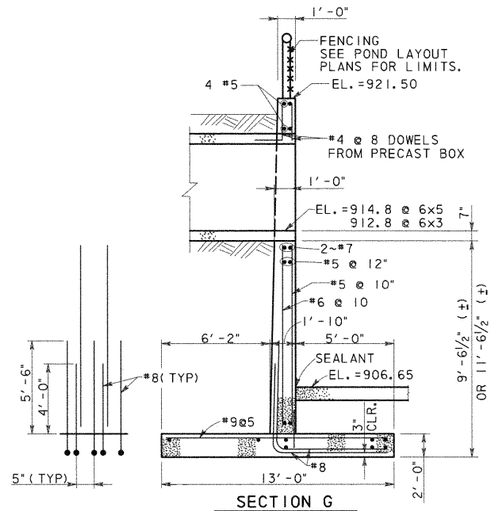

SECTION G

SCALE: ¼" = 1'-0"

STATE OF TEXAS · WALLY R. BURNS · 64262 · REGISTERED PROFESSIONAL ENGINEER

Wally R. Burns 4/28/99

NO.	DATE	REVISION	APPROVED

Turner Collie & Braden Inc.

Engineers • Planners • Project Managers

SUTTON | Job No. 62-14004-011 | Approved

© 1998 Texas Department of Transportation

US 183

WATER QUALITY PONDS STRUCTURAL DETAILS

SCALE: AS NOTED — SHEET 8 OF 11

Designed WRB	Fed. Rd. Div. No. 6	State TEXAS	Federal Aid Project No. NH99(556)	Highway No. US 183
Checked				
Drawn MR	State Dist. No. 14	County WILLIAMSON	Control No. 151	Section No. 5
Checked				Job No. 072

Sheet No. 261h

UGPDT8.DGN

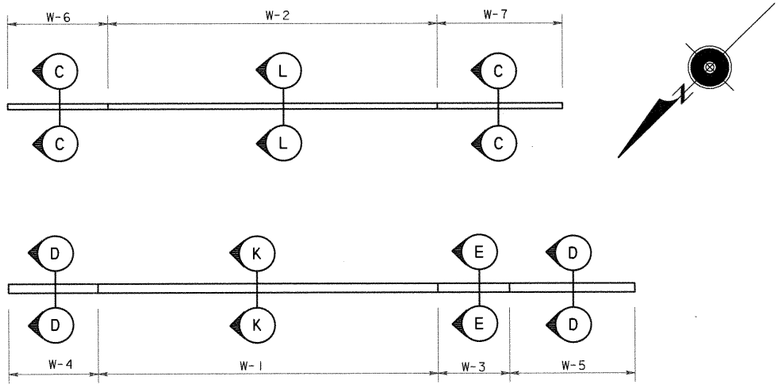

OPEN POND PLAN

Wall Height "H" (ft)	WALL	PROPERTIES: WALL DIMENSIONS (IN) Fw	Tw	Sw	Hw	Ft	Kw	REINFORCING STEEL FOR ONE 32(FT) PANEL ③: A1 ~ 26 #5 @ 15"c-c (④) Lgth	lb	A2 ~ 25 #6 @ 15"c-c (④) Lgth	lb	A3 ~ 25 #7 @ 15"c-c (④⑥) Lgth	lb	A4 ~ 26 #8 @ 15"c-c Lgth	lb	B ~ 26 #5 @ 15"c-c Lgth	lb	C Size	No.	Spa	Lgth	lb	D (#5) @ 12"c-c (⑤) No.	lb	Dowel F (#5) @ 12"c-c No.	lb	H (#5) @ 12"c-c No.	lb	T (#5) @ 12"c-c No.	lb	U ~ 26 #5 @ 15"c-c Lgth	lb
5'-0"	W4, PANEL A W5, PANEL A	60	24	12	24	12	9	63	141									5	26	15	54	122	14	474	9	71	6	202	6	202	104	236
	W6, PANEL A W7, PANEL A	58	20	12	26	12	9	59	133							65	209	5	26	15	42	95					4	134	3	101		
7'-6"	W5, PANEL B	80	34	12	34	12	9	114	258	66	208							8	39	10	74	642	16	542	12	95	8	272	8	272	104	236
9'-0"	W4, PANEL B	94	40	12	40	12	9	139	314	89	277	68	292					8	39	10	88	766	20	677	14	110	9	305	9	305	104	236
	W6, PANEL B W7, PANEL B	88	30	12	46	12	9	129	291	84	261	58	249			124	402	8	39	10	60	522					6	203	4	135		
11'-0"	W5, PANEL C	100	44	13	43	13	9	164	369	110	346	93	394					8	39	10	94	816	24	814	16	119	9	305	9	305	104	236
12'-6"	W6, PANEL C W7, PANEL C	106	38	15	53	15	12	117	265	127	398	109	460	80	458	163	530	9	39	10	72	796	26	880	17	134	7	238	5	170	104	236
14'-0"	W3 W4, PANEL C	122	55	16	51	18	12	117	265	156	487	146	844	117	676			9	39	10	116	1282	30	1016	18	141	12	407	12	407	104	236
15'-6"	W1	132	60	18	54	18	12	117	265	198	615	174	739	144	1063			11	39	10	126	2171	32	1085	20	159	12	407	12	407	104	236
	W2	126	40	18	68	18	12	117	265	168	522	153	650	123	908	202	658	11	39	10	87	1499					8	272	5	170		

ESTIMATE QUANTITIES			
WALL	CONCRETE (YD^3) *	REINFORCING (LB) *	SQ. FT. **
W1, W3, W4, W5	170	41,210	1,275
W2, W6, W7	155	26,497	1,226
TOTAL	325	67,707	2,501

* QUANTITIES FOR CONTRACTOR'S INFORMATION ONLY.

** EXPOSED SURFACE

POND DIMENSION TABLE			
WALL No.	LENGTH	HEIGHT	DESIGN HEIGHT
W-1	95'-0"	15'-6'	15'-6"
W-2	92'-0"	15'-6"	15'-6"
W-3	16'-0"	14'-0"	14'-0"
W-4	25'-0"		
PANEL A	8'-4"	2'-6" TO 6'-10"	5'-0"
PANEL B	8'-4"	6'-10" TO 11'-2"	9'-0"
PANEL C	8'-4"	11'-2" TO 15'-6"	14'-0"
W-5	35'-0"		
PANEL A	11'-8"	2'-6" TO 5'-10"	5'-0"
PANEL B	11'-8"	5'-10" TO 9'-2"	7'-6"
PANEL C	11'-8"	9'-2" TO 12'-6"	11'-0"
W-6	28'-0"		
PANEL A	9'-4"	2'-6" TO 6'-4"	5'-0"
PANEL B	9'-4"	6'-4" TO 10'-2"	9'-0"
PANEL C	9'-4"	10'-2" TO 14'-0"	12'-6"
W-7	35'-0'		
PANEL A	11'-8"	2'-6" TO 6'-4"	5'-0"
PANEL B	11'-8"	6'-4" TO 10'-2"	9'-0"
PANEL C	11'-8"	10'-2" TO 14'-0"	12'-6"

① PLACE VERTICAL BARS INSIDE OF HORIZONTAL BARS (TYP. BOTH FACES)
② PLACE FOOTING TOE AGAINST UNDISTURBED SOIL.
③ ADJUST NUMBER AND LENGH OF BARS A,B,C 7 U FOR WALLS W4, W5, W6 & W7. ADJUST BARS D, H & T FOR LENGTH OF PANEL AND STEEP GRADE OF WALL.
④ DOUBLE A BARS FOR WALLS W1, W3, W4, W5. FOR WALLS > 12'-6" ADJUST BEND OF A BARS ON STRAIGHT SIDE.
⑤ AVERAGE NUMBER OF BARS D SHOWN.
⑥ FOR 15'-6" WALLS USE #9 BARS FOR 15'-6"

GENERAL NOTES:

1. DESIGNED ACCORDING TO CURRENT AASHTO 1996 STANDARD SPECIFICATIONS.
2. DESIGNED FOR EQUIVALENT SOIL PRESSURE OF 60 PCF.
3. ALL REINFORCING SHALL BE GRADE 60 KSI.
4. ALL CONCRETE SHALL BE CLASS "C".
5. REINFORCING BARS SHALL BE ADJUSTED TO PROVIDE A MINIMUM OF 1½" CLEAR COVER.
6. ALL DIMENSIONS ARE IN FEET AND INCHES AND ALL MASS IS IN POUNDS UNLESS OTHERWISE NOTED.
7. CONSTRUCTION JOINT SHALL BE AT 32 FT. MAX. OC. PROVIDE CONSTRUCTION AT 15' MAX FROM EACH CORNER. CORNER CLOSURES SHALL BE PLACED LAST.
8. PROVIDE AN EXPANSION JOINT AFTER MAXIMUM OF 3 PANELS.
9. SEE SHEET 11 OF 11 FOR EXPANSION JOINT, CONSTRUCTION JOINT DETAILS AND ADDITIONAL NOTES.
10. SEE SHEET 10 OF 11 FOR ADDITIONAL REINFORCEMENT AROUND OPENINGS.
11. SEE SHEET 10 OF 11 FOR WALL ELEVATIONS AND BAR DETAILS.

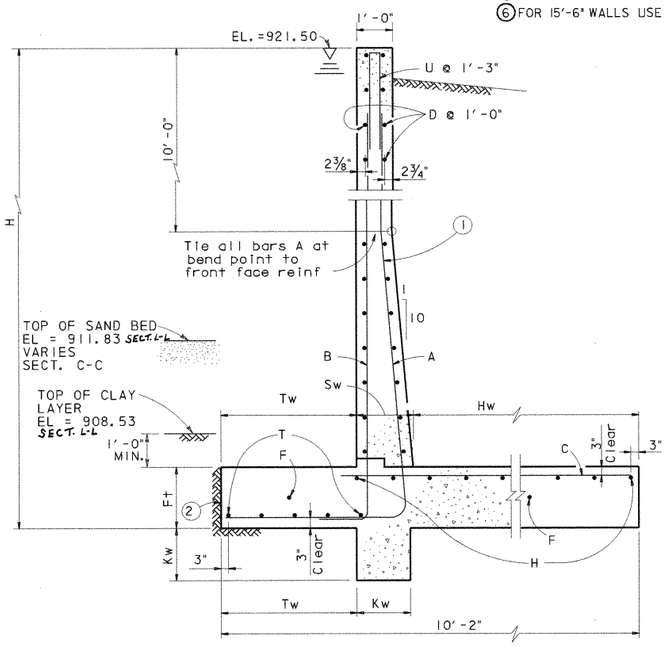

SECTION L-L & SECTION C-C
WALLS W2, W6, & W7
SCALE: ½" = 1'-0"

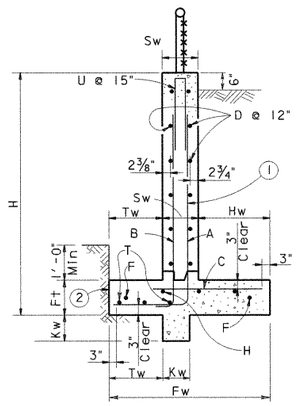

SECTION C-C
WALLS W6, & W7
SCALE: ½" = 1'-0"

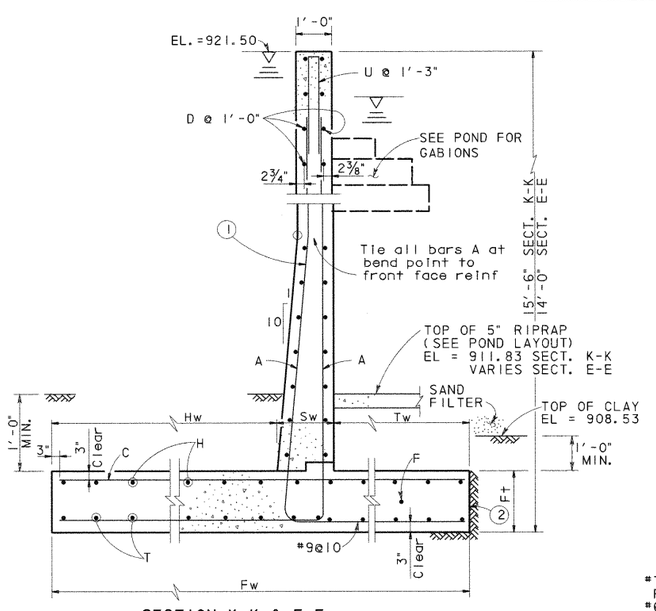

SECTION K-K & E-E
WALLS W1, W3, W4 & W5
SCALE: ½" = 1'-0"

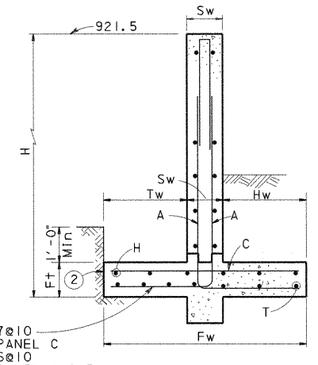

SECTION D-D
WALLS W1, W3, W4 & W5
SCALE: ½" = 1'-0"

STATE OF TEXAS
WALLY R. BURNS
44162
REGISTERED
PROFESSIONAL ENGINEER
4/28/99

NO.	DATE	REVISION	APPROVED

Turner Collie & Braden Inc.
Engineers • Planners • Project Managers

DIST: SUTTON — Job No. 62-14004-011 — Approved

© 1998 Texas Department of Transportation

US 183
POND SPRINGS
WATER QUALITY PONDS
STRUCTURAL DETAILS

SCALE: AS NOTED — SHEET 9 OF 11

Designed	WRB	FED. RD. DIV. NO.	STATE	FEDERAL AID PROJECT NO.				HIGHWAY NO.
Checked		6	TEXAS	NH99(556)				US 183
Drawn	MR	STATE DIST. NO.	COUNTY	CONTROL NO.	SECTION NO.	JOB NO.	SHEET NO.	
Checked		14	WILLIAMSON	151	5	072	2611	

UGPDT9.DGN

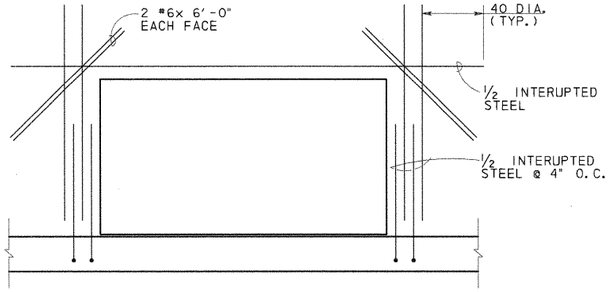

CULVERT OPENINGS

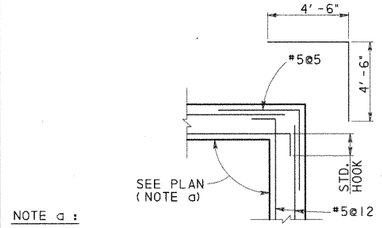

NOTE a :

SEE 620 MEDIAN POND (SHT. 5 OF 11), SYSTEM 3 POND (SHT. 7 OF 11)

DETAIL 1
SCALE: 1/2" = 1'-0"

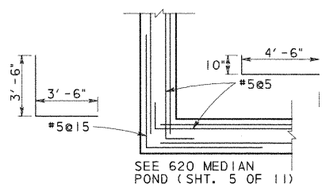

DETAIL 2
SCALE: 1/2" = 1'-0"

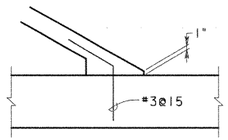

DETAIL 3
SCALE: 3/4" = 1'-0"

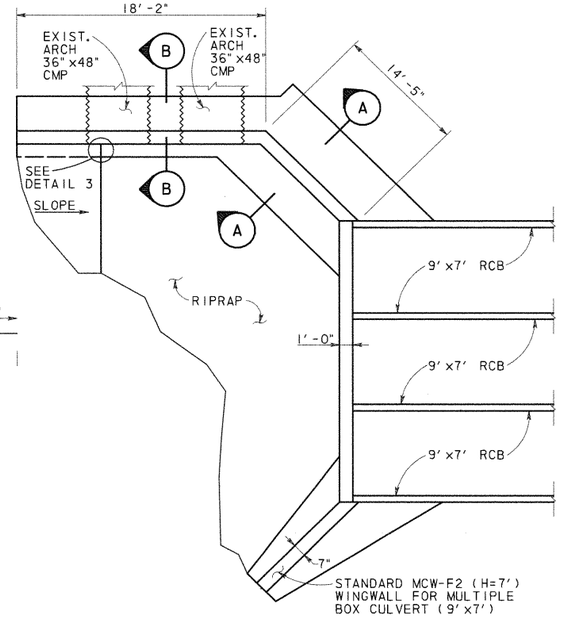

CULVERT @ POND SPRINGS PLAN
N. T. S.

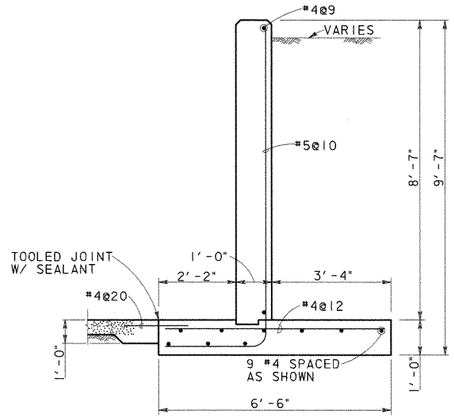

SECTION A-A
SCALE: 1/2" = 1'-0"

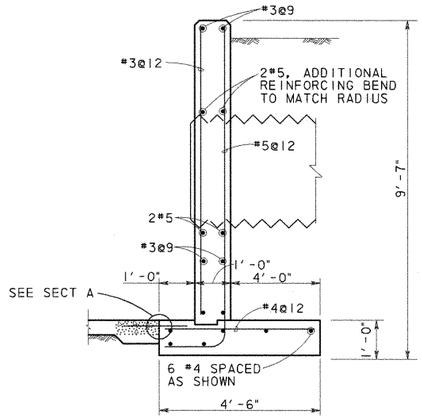

SECTION B-B
SCALE: 1/2" = 1'-0"

POND SPRINGS HEADWALL ESTIMATE QUANTITIES	
CONCRETE (YD^3) *	REINFORCING (LB) *
20.8	672

* QUANTITIES FOR CONTRACTOR'S INFORMATION ONLY. QUANTITIES SHOWN DO NOT INCLUDE THE .5 MCW-F2 WINGWALL OR THE CULVERT CURB.

THE HEADWALL SHALL BE PAID FOR AS MCW-F2(SPL).

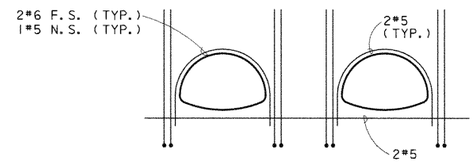

ADDITIONAL REINFORCMENT SHOWN. SEE SECTION B FOR TYPICAL

ELEVATION @ ARCH PIPE
N. T. S.

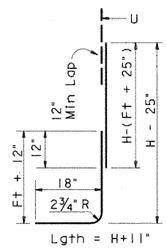

BARS B

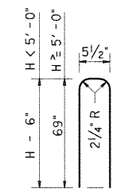

BARS U

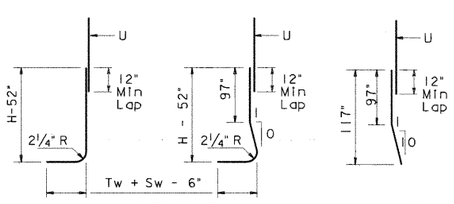

BARS A1

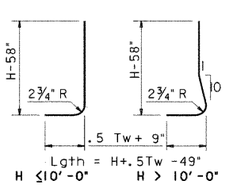

BARS A2

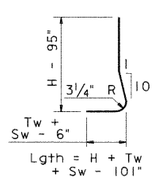

BARS A3

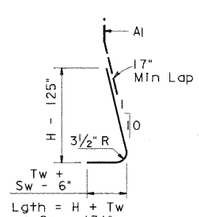

BARS A4

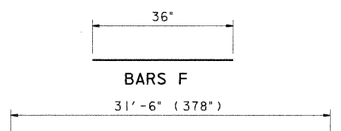

BARS D, H, T

BAR DETAILS POND SPRING

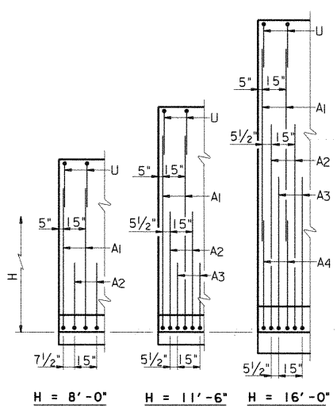

PARTIAL WALL ELEVATIONS
(Showing vertical reinforcing pattern in back face)

STATE OF TEXAS
WILLY R. BURNS
44162
REGISTERED
PROFESSIONAL ENGINEER
6/8/98

NO.	DATE	REVISION	APPROVED

Turner Collie & Braden Inc.
Engineers • Planners • Project Managers

TRANSPORTATION | Job No. 81-07401-024 | Approved

© 1998 Texas Department of Transportation

US 183
MISCELLANEOUS
WATER QUALITY PONDS
STRUCTURAL DETAILS

SCALE: AS NOTED | SHEET 10 OF 11

Designed	WRB	FED. RD. DIV. NO.	STATE	FEDERAL AID PROJECT NO.				HIGHWAY NO.
Checked		6	TEXAS	NH99(556)				US 183
Drawn	MR	STATE DIST. NO.	COUNTY	CONTROL NO.	SECTION NO.	JOB NO.		SHEET NO.
Checked		14	WILLIAMSON	151	5	072		261J

UGPDT10.DGN

AF 41904A

Ultimate Drainage Areas North of R.M. 620 Were Used In Storm Sewer And Water Quality Pond Design

R.M. 620

PECAN PARK

LAKE CREEK PARKWAY

HYMEADOW

Q50 = 447.4 cfs
Outfall 1

Pond 1A

Pond 1B

Pond 1C

Outfall 2
Q100 = 412 cfs
Q50 = 385 cfs

Pond 2A

Pond 2B

Pond 2C

Pond 2D1

Pond 2D2

R.M. 620 Median Pond

Q50 = 800 cfs

Q50 = 89.2 cfs

To Drainage Structures (By Others)

MELLOW MEADOWS DRIVE

LAKESTOP BLVD.

Interim Drainage Areas

US 183

R.M. 620

ANDERSON MILL ROAD

CONTRIBUTING AREA TO LAKE CREEK CHANNEL

A_{TOTAL} = 1133 ACRES
Q_{50} = 4100 cfs *
Q_{100} = 4400 cfs *

* THESE FLOWS ARE BASED ON REGIONAL ANALYSIS OF THE ENTIRE CONTRIBUTING AREA AND DO NOT EQUATE TO THE ACCUMULATED THYSYS FLOWS.

Q50 = 200 cfs

NO.	DATE	REVISION	APPROV.
4			
3			
2			
1			

Turner Collie & Braden Inc.
CONSULTING ENGINEERS
TEXAS AUSTIN/DALLAS/HOUSTON/PORT ARTHUR
COLORADO DENVER

Unit: AUSTIN | Job No. 72-07401-022 | Approved

STATE DEPARTMENT OF HIGHWAYS AND PUBLIC TRANSPORTATION

©1998 TxDOT

DRAINAGE AREA MAP

SCALE: 1" = 200'

Designed DAN	FED. NO. DIV. NO.	STATE	FEDERAL AID PROJECT NO.			HIGHWAY NO.
Checked	6	TEXAS	NH 99(556)			U.S. 183
Drawn WWS	STATE DIST. NO.	COUNTY	CONTROL NO.	SECTION NO.	JOB NO.	SHEET NO.
Checked DAN	14	WILLIAMSON	151	05	072	262a

STATE OF TEXAS
Robert W. Barnett
49537
REGISTERED PROFESSIONAL ENGINEER

Robert W. Barnett
5-09-88

A.F. 61904A

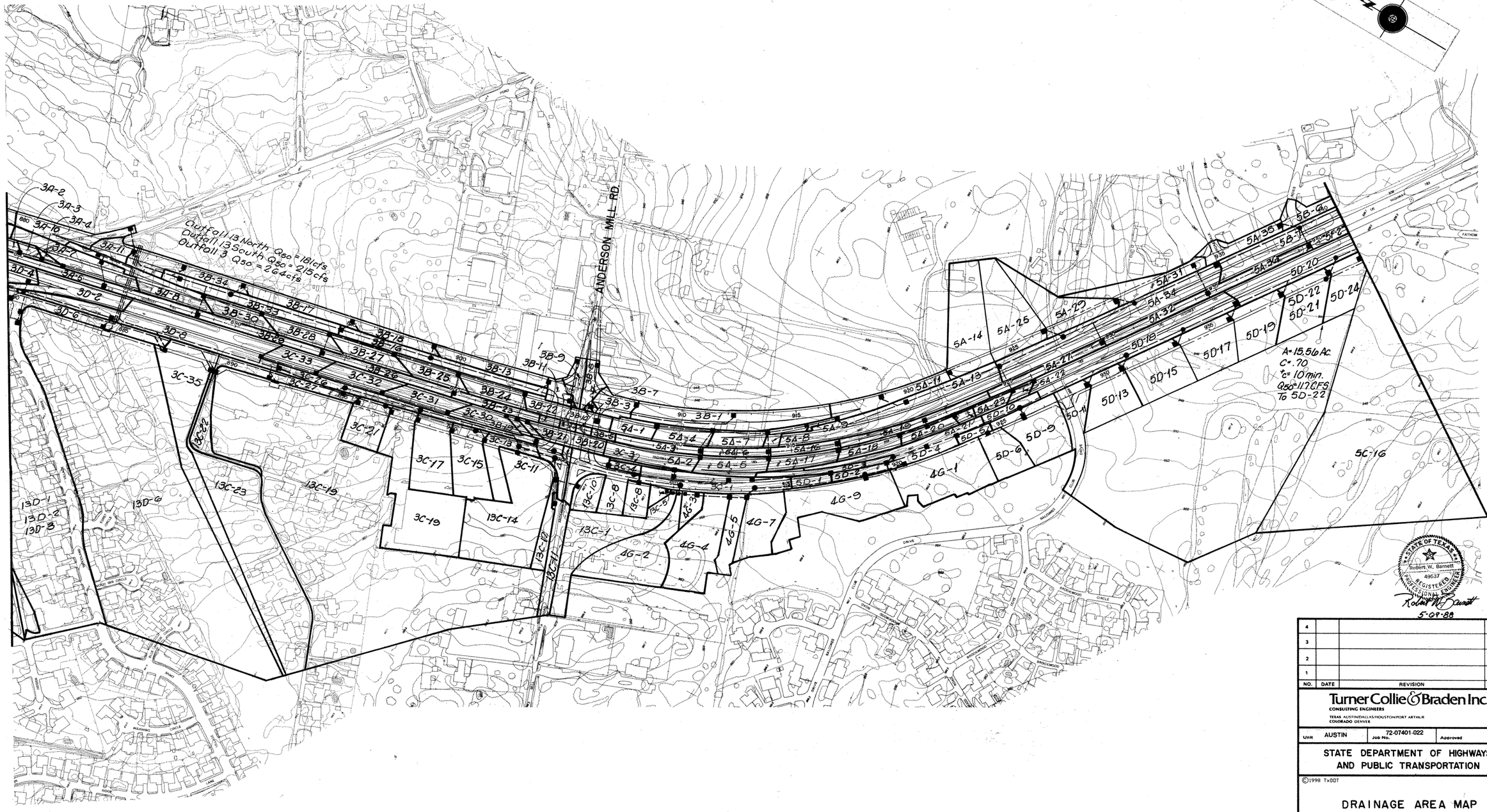

NO.	DATE	REVISION	APPROV.
4			
3			
2			
1			

Turner Collie & Braden Inc.
CONSULTING ENGINEERS
TEXAS AUSTIN/DALLAS/HOUSTON/PORT ARTHUR
COLORADO DENVER

Unit AUSTIN | Job No. 72-07401-022 | Approved

STATE DEPARTMENT OF HIGHWAYS AND PUBLIC TRANSPORTATION

©1998 TxDOT

DRAINAGE AREA MAP

SCALE: 1"=200'

Designed DAN	FED. RD. DIV. NO.	STATE	FEDERAL AID PROJECT NO.			HIGHWAY NO.
Checked	6	TEXAS	NH 99(556)			U.S. 183
Drawn WWS	STATE DIST. NO.	COUNTY	CONTROL NO.	SECTION NO.	JOB NO.	SHEET NO.
Checked DAN	14	WILLIAMSON	151	05	072	202b

A.F. 41804A

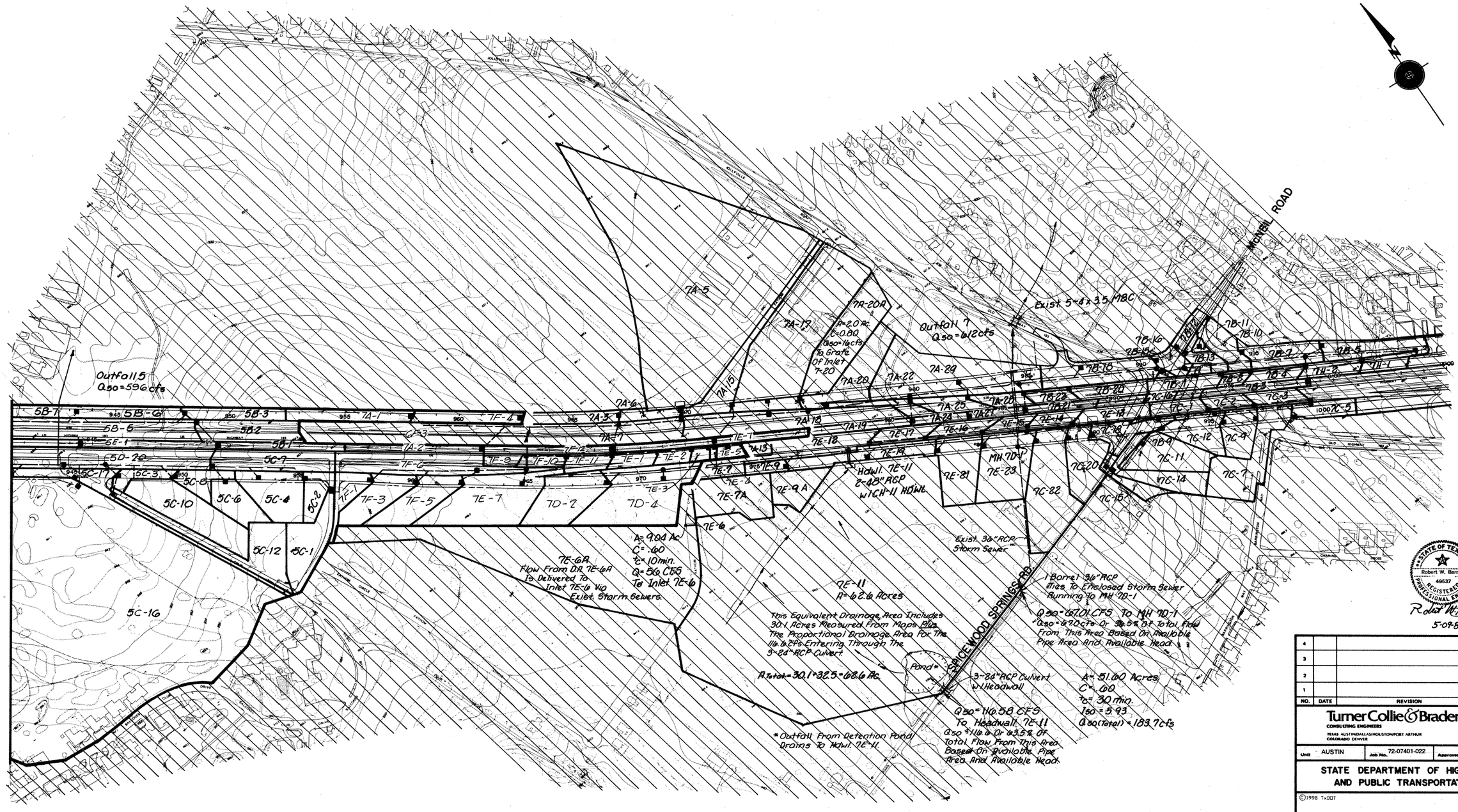
MICHEL ROAD
Outfall 5
Q50=596cfs
Outfall 7
Q50=612cfs
Exist 5-8'x3.5' MBC
7A-5
7A-17
7A-20A
A=2.0 Ac.
C=0.80
Q50=14cfs
To Grate Of Inlet 7-20
7A-15
7A-6
7A-3
7A-7
7A-18
7A-19
7A-20
7A-22
7A-29
7A-25
7A-24
7A-27
7A-26
7A-1
7A-2
7A-13
7F-4
7F-12
7F-11
7F-10
7F-9
7F-8
7F-6
7F-5
7F-3
7F-2
7F-1
7E-1
7E-2
7E-5
7E-7
7E-8
7E-9
7E-9A
7E-9A
7E-6
7E-3
7E-4
7E-7A
7E-10
7E-12
7E-13
7E-14
7E-15
7E-16
7E-17
7E-18
7E-19
7E-11
7E-81
7E-82
7E-23
MH 7D-1
7D-2
7D-4
HDWL 7E-11
2-48" RCP
W/CH-11 HDWL
5B-7
5B-6
5B-5
5B-3
5B-2
5B-1
5E-1
5D-20
5C-17
5C-7
5C-3
5C-8
5C-10
5C-6
5C-4
5C-2
5C-12
5C-1
5C-16
7B-11
7B-10
7B-16
7B-15
7B-13
7B-12
7B-14
7B-18
7B-17
7B-1
7B-2
7B-3
7B-4
7B-5
7B-6
7B-7
7B-8
7B-9
7B-21
7B-22
7B-23
7C-16
7C-1
7C-2
7C-3
1000 7C-5
7C-18
7C-19
7C-20
7C-12
7C-4
7C-11
7C-14
7C-7
7C-82
7C-15
7D-9
7D-11
7D-12
7D-13
7D-14
7D-15
7D-16
7D-17
7D-18
7D-19
7D-20
7D-21
7D-22
7D-23
7D-24
7D-25
7D-26
7D-27
7D-28
7D-29
7D-30
7D-31
7D-32
7D-33
7D-34
7D-35
7D-36
7D-37
7D-38
7D-39
7D-40
7D-41
7D-42
7D-43
7D-44
7D-45
7D-46
7D-47
7D-48
7D-49
7D-50

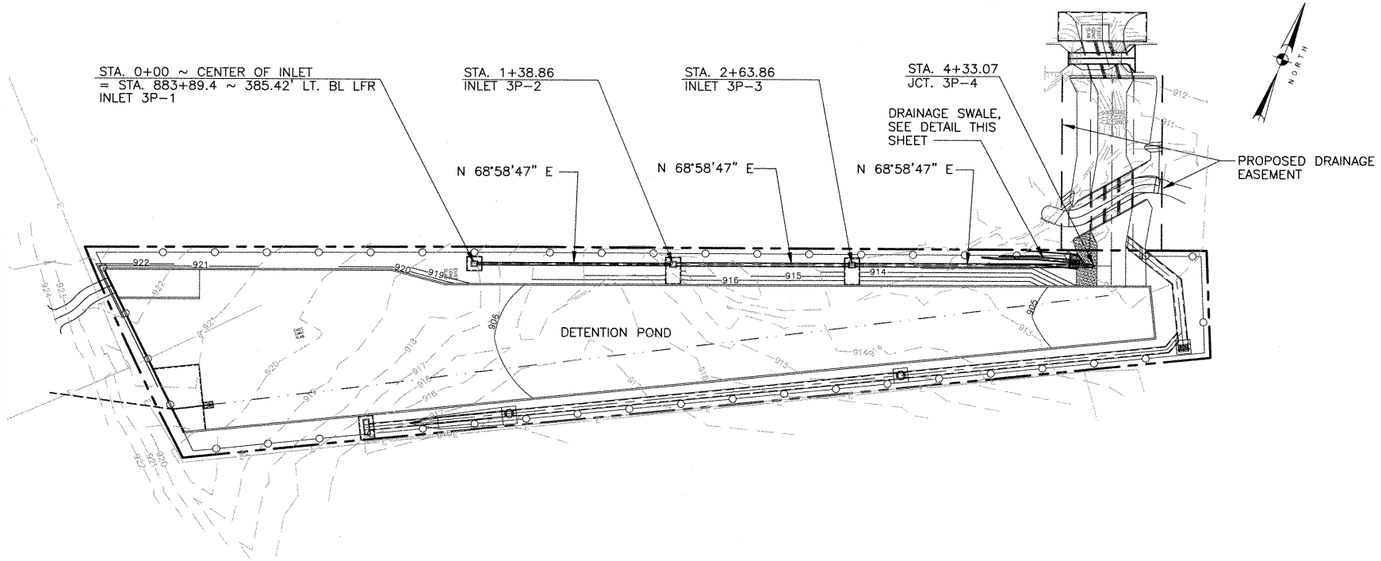

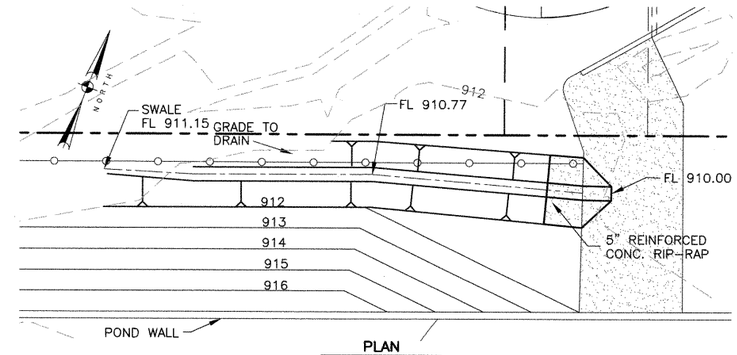

PLAN
SCALE: 1" = 10'

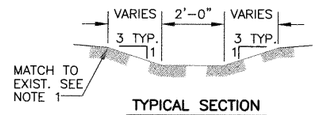

TYPICAL SECTION
NOT TO SCALE

DRAINAGE SWALE DETAIL

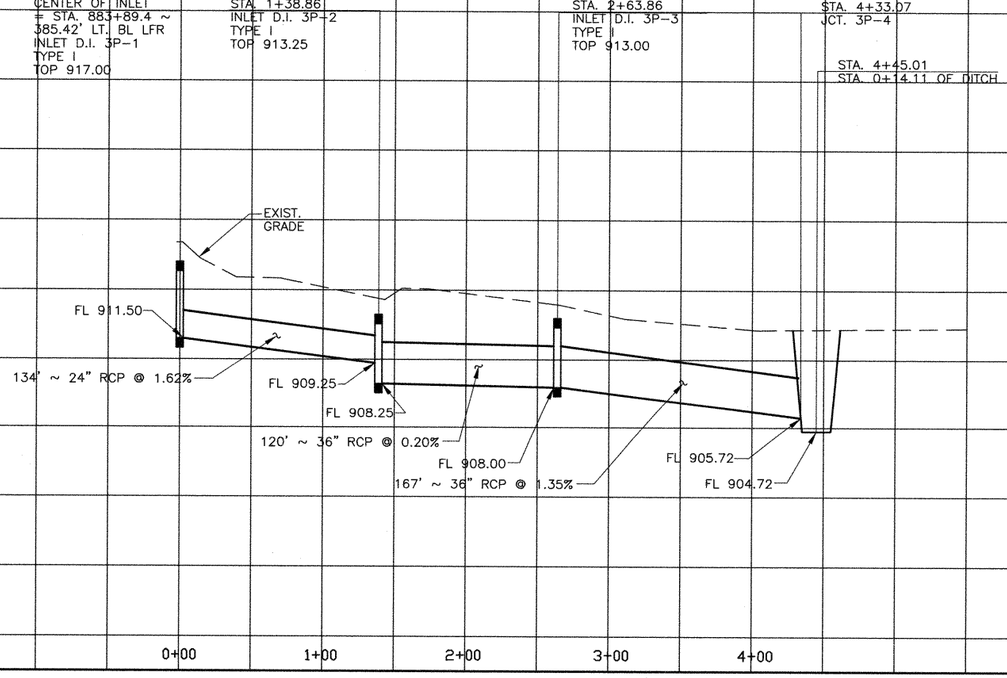

NOTE:

1. CONTRACTOR SHALL FIELD VERIFY EXISTING ELEVATIONS.
2. SEE SHT. 331a FOR DRAINAGE DETAILS

STATE OF TEXAS
C.D. BILLS
83877
LICENSED PROFESSIONAL ENGINEER
5-9-99

Turner Collie & Braden Inc.
ENGINEERS • PLANNERS • PROJECT MANAGERS

Unit: AUSTIN | Job No.: 72-07401-022 | File:

Texas Department of Transportation

©1998 TxDOT

POND SPRINGS
SYSTEM 3P – STORM SEWER
PLAN & PROFILE

SCALE:H:1"=50', V:1"=5'

Designed	CDB	FED. RD. DIV. NO.	STATE	FEDERAL AID PROJECT NO.				HIGHWAY NO.
Checked	RAB	6	TEXAS	NH 99(556)				U.S.183
Drawn	GWS	STATE DIST. NO.	COUNTY	CONTROL NO.	SECTION NO.	JOB NO.		SHEET NO.
Checked	DLG	14	WILLIAMSON	0151	05	072		329

DATE: 04/28/99
JOB NO. 72-07401-022/ponds/sys3/det-pp1.dwg

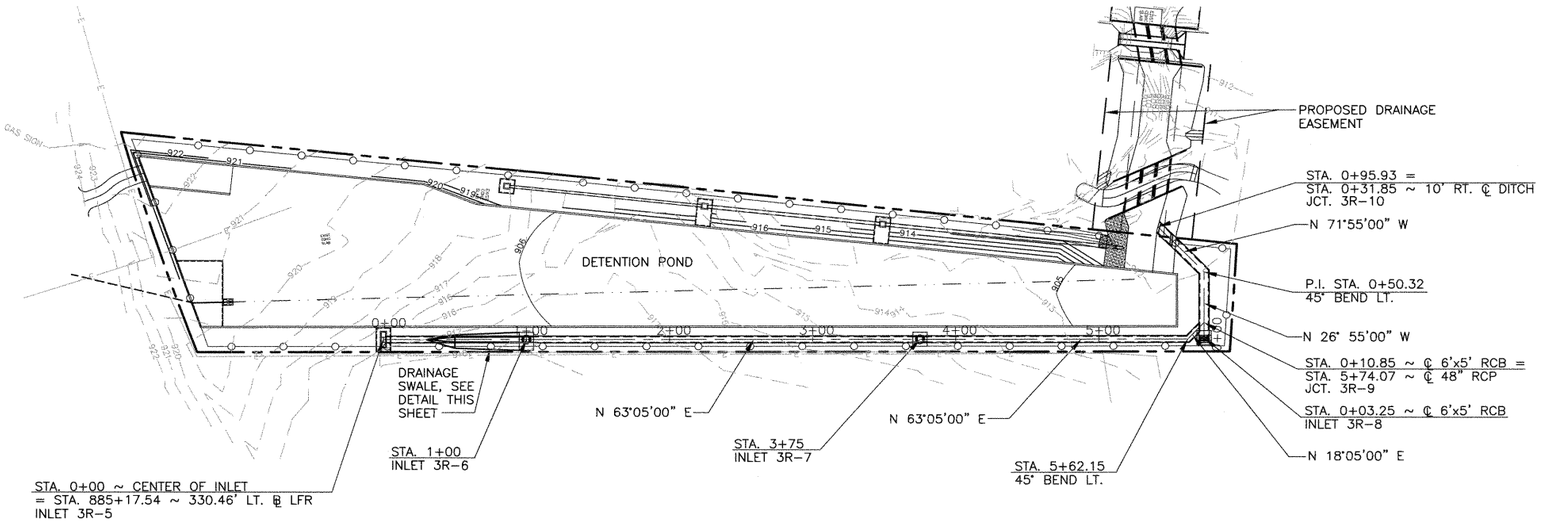

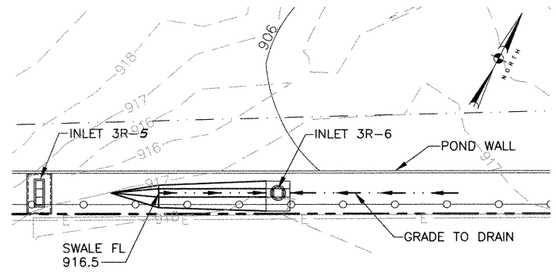

PLAN
SCALE: 1" = 30'

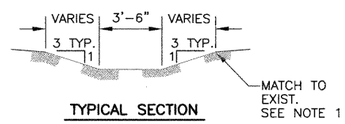

TYPICAL SECTION
NOT TO SCALE

DRAINAGE SWALE DETAIL

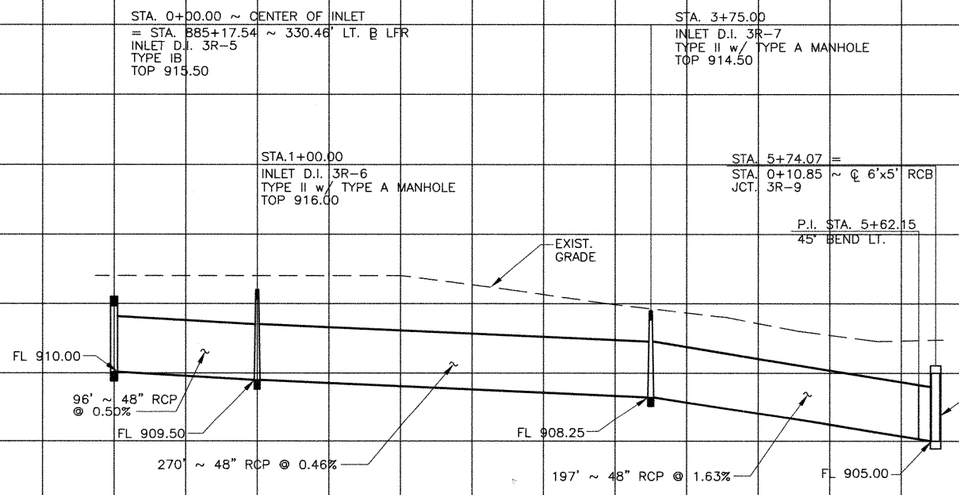

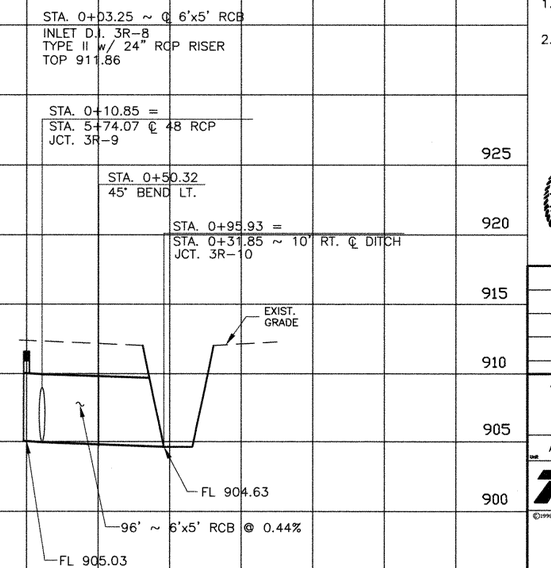

NOTE:

1. CONTRACTOR SHALL FIELD VERIFY EXISTING ELEVATIONS.
2. SEE SHT. 331b FOR DRAINAGE DETAILS.

STATE OF TEXAS
C. D. BILLS
83877
LICENSED
PROFESSIONAL ENGINEER
C.D. Bills 5-3-99

Turner Collie & Braden Inc.
ENGINEERS • PLANNERS • PROJECT MANAGERS

AUSTIN | 72-07401-022

Texas Department of Transportation

©1998 TxDOT

POND SPRINGS
SYSTEM 3R – STORM SEWER
PLAN & PROFILE

SCALE:H:1"=50', V:1"=5'

Designed	CDB	FED. RD. DIV. NO.	STATE	FEDERAL AID PROJECT NO.				HIGHWAY NO.
Checked	RAB	6	TEXAS	NH 99(556)				U.S.183
Drawn	GWS	STATE DIST. NO.	COUNTY	CONTROL NO.	SECTION NO.	JOB NO.		SHEET NO.
Checked	DLG	14	WILLIAMSON	0151	05	072		330

DATE: 04/28/99
JOB NO. 72-07401022/ponds/sys3/det-pp2.dwg

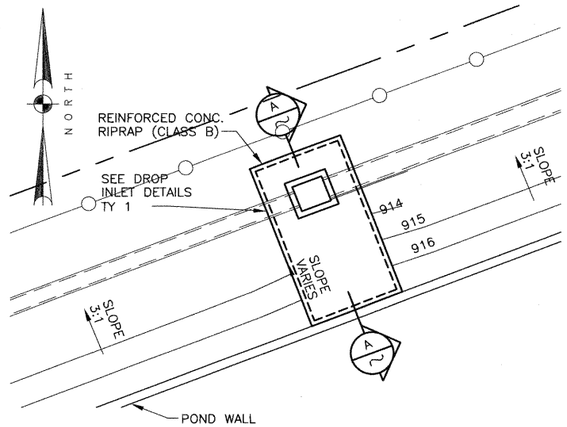

PLAN – INLETS 3P–2 & 3P–3

SCALE: 1/8" = 1'–0"

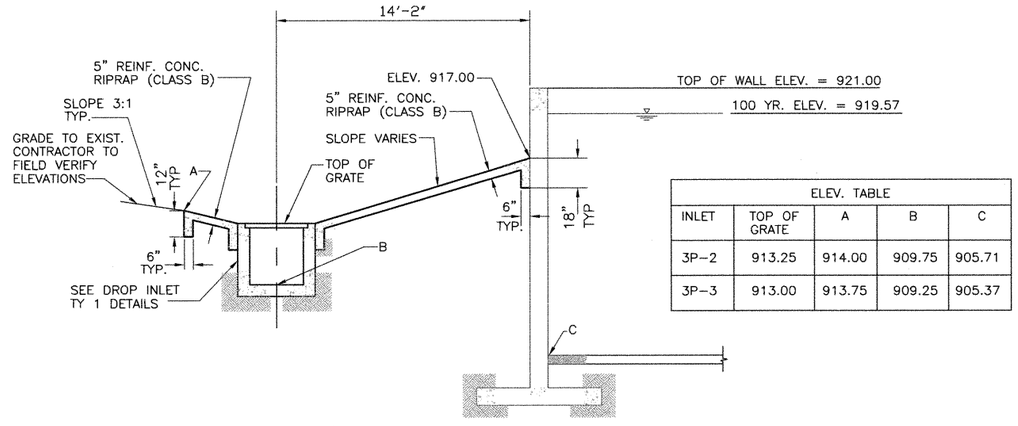

ELEV. TABLE				
INLET	TOP OF GRATE	A	B	C
3P–2	913.25	914.00	909.75	905.71
3P–3	913.00	913.75	909.25	905.37

SECTION A

SCALE: 1/4" = 1'

NOTE:

1. CONTRACTOR TO FIELD VERIFY ELEVATIONS.

STATE OF TEXAS
C.D. BILLS
83677
LICENSED PROFESSIONAL ENGINEER
C.D. Bills
5399

Turner Collie & Braden Inc.
ENGINEERS • PLANNERS • PROJECT MANAGERS

AUSTIN | job No. 72–07401–022 | File

©1998 TxDOT

POND SPRINGS SYSTEM 3P DRAINAGE DETAILS

SCALE: AS NOTED

Designed	CDB	FED. RD. DIV. NO.	STATE	FEDERAL AID PROJECT NO.				HIGHWAY NO.
Checked	RAB	6	TEXAS	NH 99(556)				U.S.183
Drawn	GWS	STATE DIST. NO.	COUNTY	CONTROL NO.	SECTION NO.	JOB NO.		SHEET NO.
Checked	DLG	14	WILLIAMSON	0151	05	072		331a

DATE: 04/29/99
JOB NO. 72–07401–022/PONDS/SYS3/del–pd–d3.dwg

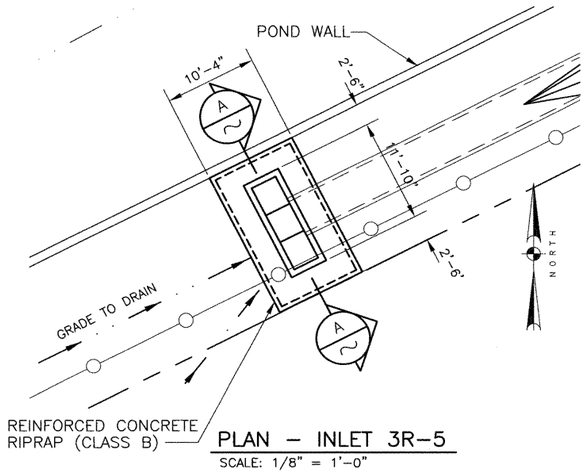

PLAN – INLET 3R–5

SCALE: 1/8" = 1'–0"

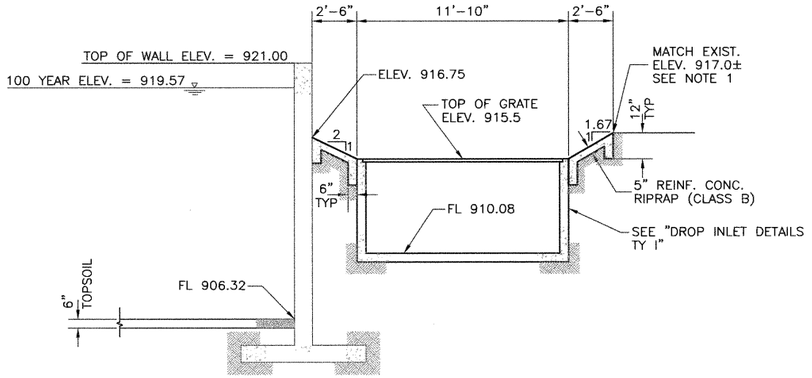

SECTION

SCALE: 1/4" = 1'

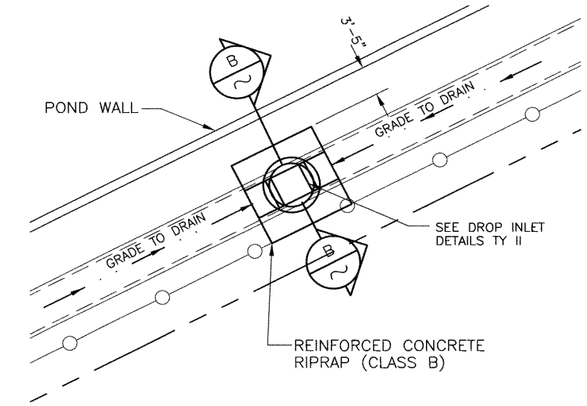

PLAN – INLET 3R–6 & 3R–7

SCALE: 1/8" = 1'–0"

ELEV. TABLE				
INLET	TOP OF GRATE	A	B	C
3R–6	916.00	918.00	906.02	6'–0"
3R–7	914.50	915.20	904.29	3'–3"

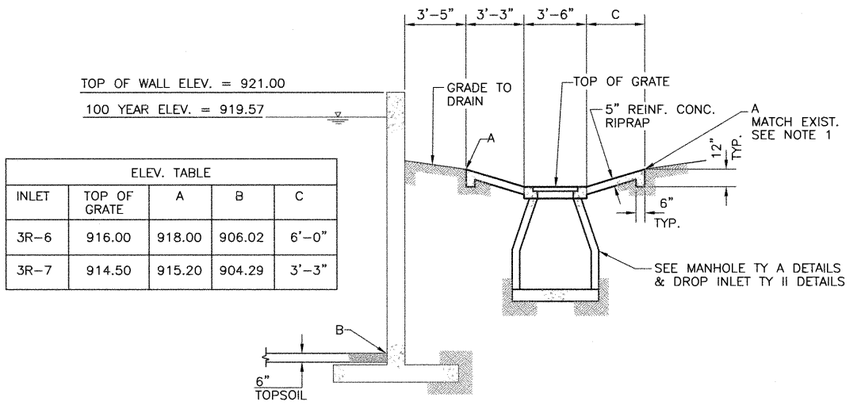

SECTION

SCALE: 1/4" = 1'

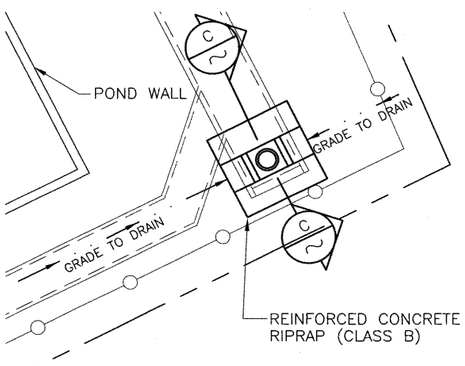

PLAN – INLET 3R–8

SCALE: 1/8" = 1'–0"

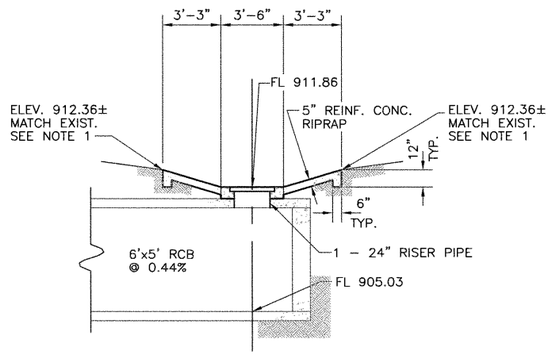

SECTION

SCALE: 1/4" = 1'

NOTE:

1. CONTRACTOR TO FIELD VERIFY ELEVATIONS.
2. SEE WATER QUALITY PONDS STRUCTURAL DETAILS, SHT.S 261g – 261i , FOR CONC. RETAINING WALL DETAILS.

STATE OF TEXAS
C. D. BILLS
83877
LICENSED
PROFESSIONAL ENGINEER
C.D. Bills 5-5-99

©1998 TxDOT

Turner Collie & Braden Inc.
ENGINEERS • PLANNERS • PROJECT MANAGERS

Unit	Job No.	File
AUSTIN	72–07401–022	

POND SPRINGS SYSTEM 3R DRAINAGE DETAILS

SCALE: AS NOTED

Designed	CDB	FED. RD. DIV. NO.	STATE	FEDERAL AID PROJECT NO.				HIGHWAY NO.
Checked	RAB	6	TEXAS	NH 99(556)				U.S.183
Drawn	GWS	STATE DIST. NO.	COUNTY	CONTROL NO.	SECTION NO.	JOB NO.		SHEET NO.
Checked	DLG	14	WILLIAMSON	015	05	072		331b

DATE: 04/28/99
JOB NO. 72-07401-022/PONDS/SYS3/det-pd-d2.dwg

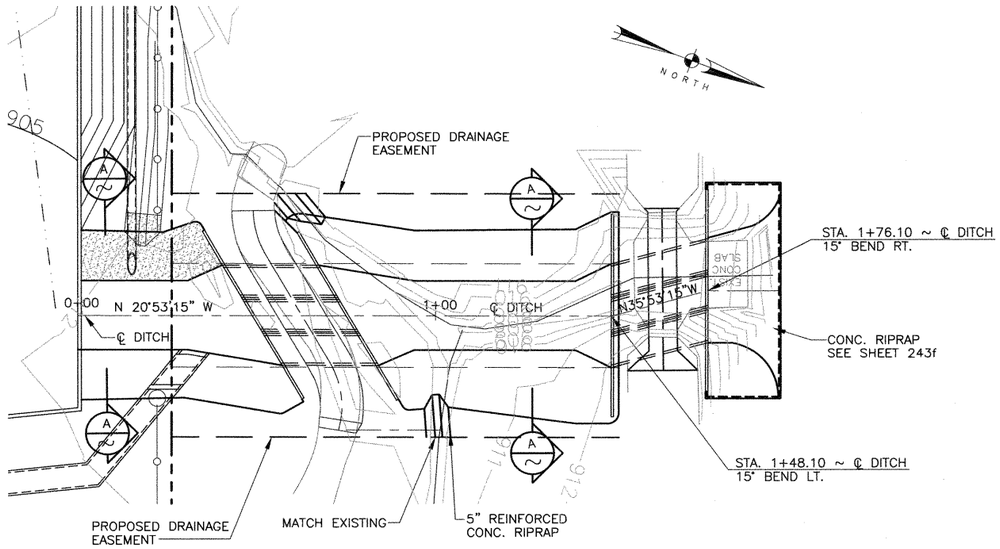

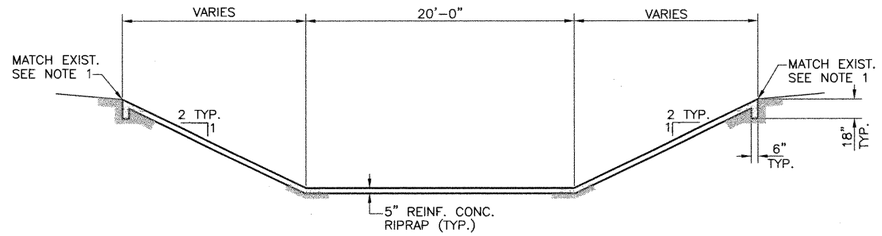

SECTION (A)
SCALE: 3/16" =1'

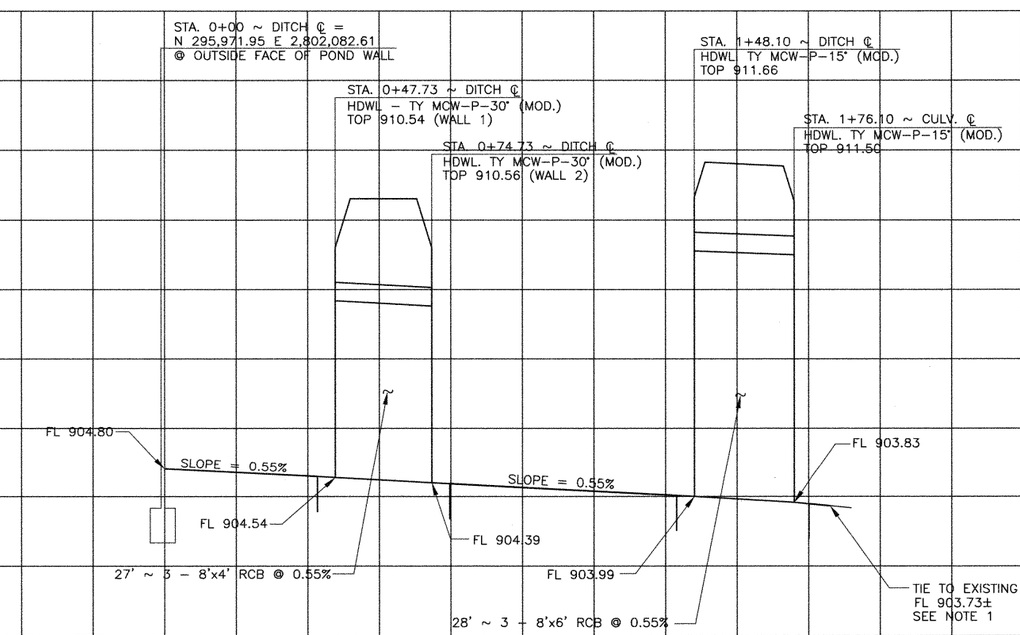

NOTE:

1. CONTRACTOR SHALL FIELD VERIFY EXISTING ELEVATIONS.
2. FOR HDWL TY MCW P-30 MOD. REINFORCEMENT DETAILS SEE SHT. ~~336u~~.
3. FOR HEADWALL TY MCW P-15" MOD. REINFORCEMENT DETAILS, SEE SHT. ~~336t~~.

STATE OF TEXAS
C. D. BILLS
83877
LICENSED PROFESSIONAL ENGINEER
C.D. Bills 5-3-99

Turner Collie & Braden Inc.
ENGINEERS • PLANNERS • PROJECT MANAGERS

AUSTIN | Job No. 72-07401-022

©1998 TxDOT

POND SPRINGS OUTFALL PLAN & PROFILE

SCALE: H:1"=20', V:1"=2' SHT 1 OF 3

Designed	CDB	FED. RD. DIV. NO.	STATE	FEDERAL AID PROJECT NO.				HIGHWAY NO.
Checked	RAB	6	TEXAS	NH 99(556)				U.S.183
Drawn	GWS	STATE DIST. NO.	COUNTY	CONTROL NO.	SECTION NO.	JOB NO.	SHEET NO.	
Checked	DLG	14	WILLIAMSON	0151	05	072	332	

DATE: 04/28/99
JOB NO: T:\07401022/PONDS/SYS3/det-pp3.dwg

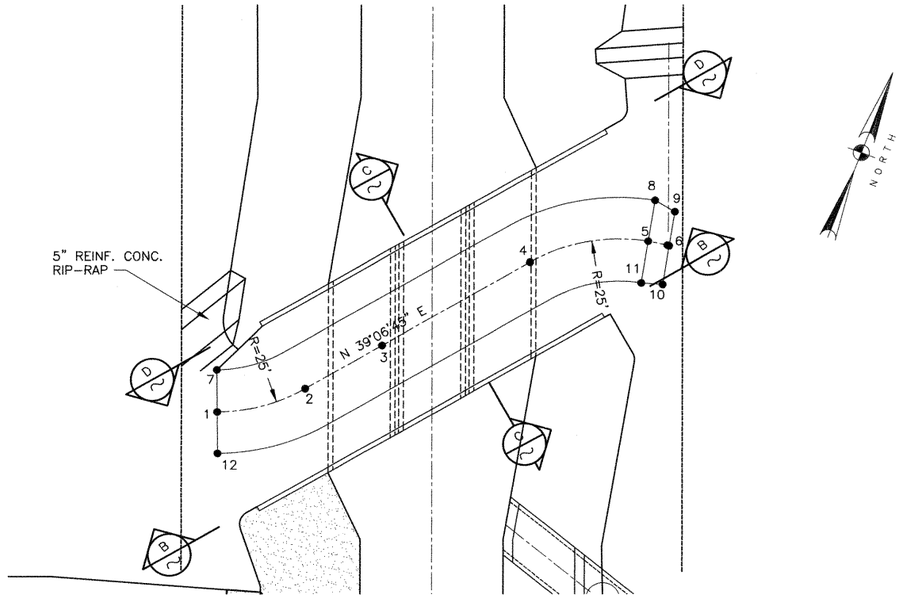

PLAN – DRIVEWAY
SCALE: 1" = 10'

POINT LOCATION TABLE

POINT No.	N	E	ELEV.
DRIVEWAY			
1	296007.06	2802037.10	911.74±*
2	296014.57	2802047.38	911.61
3	296023.98	2802055.03	911.48
4	296042.70	2802070.25	911.23
5	296051.41	2802084.58	911.05
6	296051.84	2802087.55	911.14±*
7	296012.67	2802034.96	911.72±*
8	296057.28	2802083.36	910.93
9	296056.75	2802086.54	910.74*
10	296046.40	2802088.68	911.45±*
11	296045.53	2802085.80	911.40±*
12	296001.46	2802039.24	911.71±*

* MATCH EXISTING, SEE NOTE 1

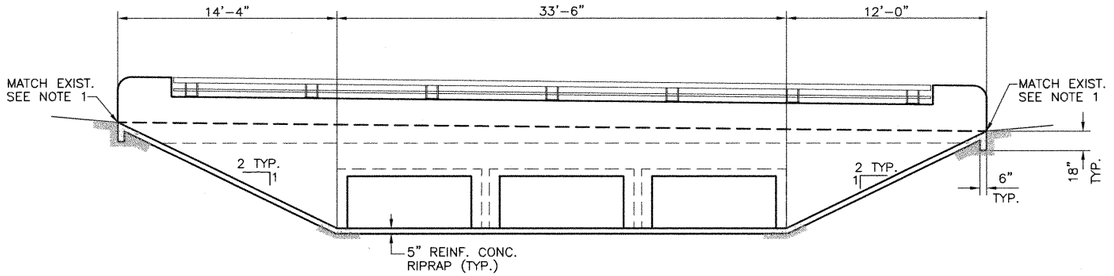

SECTION B
SCALE: 3/16" =1' 243d

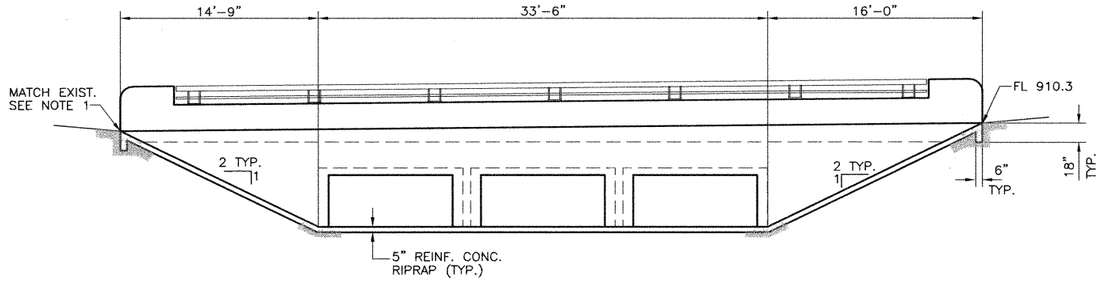

SECTION D
SCALE: 3/16" =1' 243d

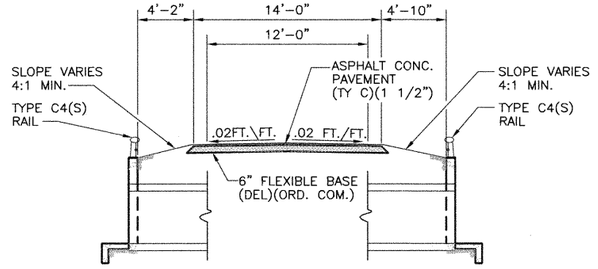

SECTION C
SCALE: 3/16" =1' 243d

NOTE:

1. CONTRACTOR SHALL FIELD VERIFY EXISTING ELEVATIONS.

STATE OF TEXAS
C.D. BILLS
83877
LICENSED
PROFESSIONAL ENGINEER
C.D. Bills 5-3-99

DATE: 04/28/99
JOB NO. T:\0740\022/PONDS/SYS3/out-det1.dwg

Turner Collie & Braden Inc.
ENGINEERS • PLANNERS • PROJECT MANAGERS

Unit	Job No.	File
AUSTIN	72-07401-022	

Texas Department of Transportation

©1998 TxDOT

POND SPRINGS OUTFALL SECTIONS

SCALE: AS NOTED

Designed	CDB	FED. RD. DIV. NO.	STATE	FEDERAL AID PROJECT NO.				HIGHWAY NO.
Checked	RAB	6	TEXAS	NH 99(556)				U.S.183
Drawn	GWS	STATE DIST. NO.	COUNTY	CONTROL NO.	SECTION NO.	JOB NO.		SHEET NO.
Checked	DLG	14	WILLIAMSON	0151	05	072		333a

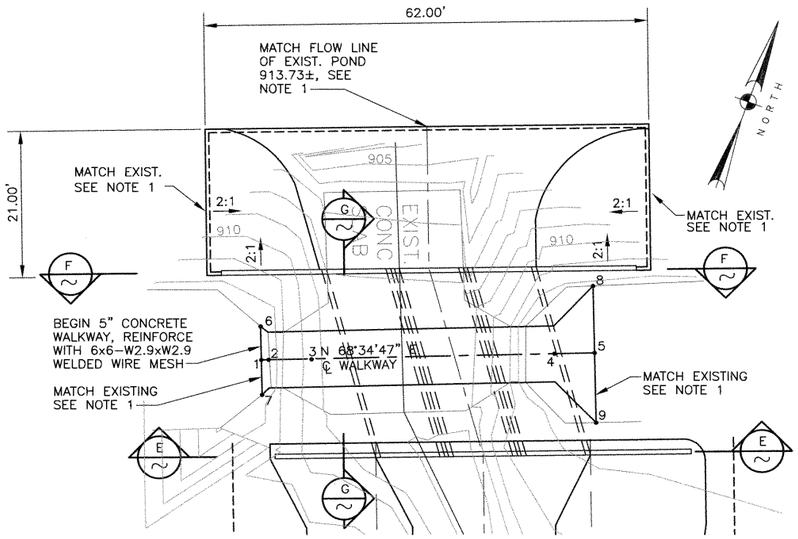

PLAN – DETENTION POND OUTFALL

SCALE: 1" = 10'

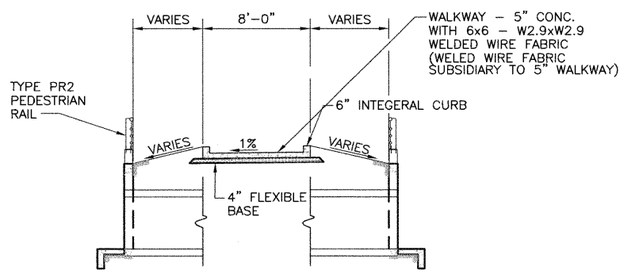

SECTION G

SCALE: 3/16" =1'

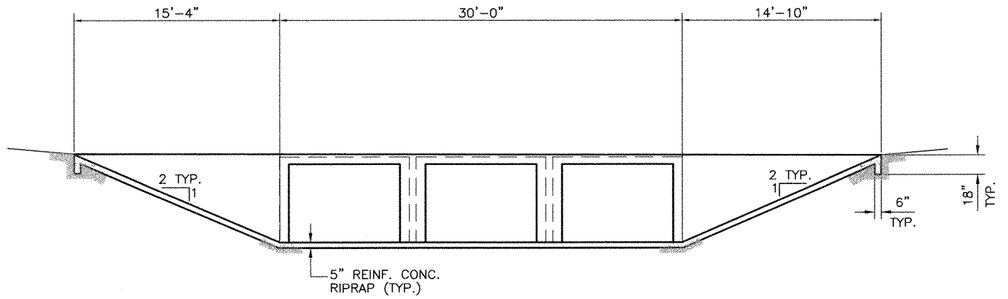

SECTION F

SCALE: 3/16" =1'

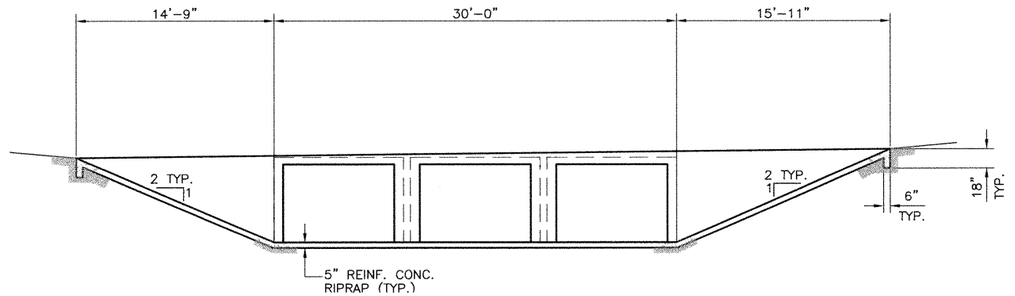

SECTION E

SCALE: 3/16" =1'

POINT LOCATION TABLE

POINT No.	N	E	ELEV.
CONC. WALKWAY			
1	296113.50	2801995.60	912.86±*
2	296113.87	2801996.53	912.93 TOP
3	296116.06	2802002.12	913.05
4	296128.47	2802033.75	912.37
5	296130.51	2802038.96	912.26
6	296118.00	2801993.84	912.86±*
7	296108.90	2801997.41	912.86±*
8	296139.45	2802035.45	912.21±*
9	296121.23	2802042.60	912.34±*

* MATCH EXISTING, SEE NOTE 1

NOTE:

1. CONTRACTOR SHALL FIELD VERIFY EXISTING ELEVATIONS.

STATE OF TEXAS
C. D. BILLS
83877
LICENSED PROFESSIONAL ENGINEER
C.D. Bills
5-3-99

Turner Collie & Braden Inc.
ENGINEERS • PLANNERS • PROJECT MANAGERS

AUSTIN | Job No. 72–07401–022

Texas Department of Transportation

©1998 TxDOT

POND SPRINGS OUTFALL PLAN & SECTIONS

SCALE: AS NOTED

Designed	CDB	FED. RD. DIV. NO.	STATE	FEDERAL AID PROJECT NO.				HIGHWAY NO.
Checked	RAB	6	TEXAS	NH 99(556)				U.S.183
Drawn	GWS	STATE DIST. NO.	COUNTY	CONTROL NO.	SECTION NO.	JOB NO.		SHEET NO.
Checked	DLG	14	WILLIAMSON	0151	05	072		333b

DATE: 04/28/99
JOB NO. 1:\07401022\ponds\sys3\out-del2.dwg

BASIN D

	ITEM 100	ITEM 110	ITEM 110	ITEM 132	ITEM 132	ITEM 160	ITEM 160	ITEM 164	ITEM 164	ITEM 164	ITEM 168	ITEM 169	ITEM 169	ITEM 247	ITEM 310	ITEM 400	ITEM 400	ITEM 402	ITEM 421	ITEM 423	ITEM 432	ITEM 450	ITEM 450	ITEM 460	ITEM 462	ITEM 462	ITEM 462
	Prep. R.O.W.	EXCAV (CHANNEL)	EXCAV (POND)	EMBANK (TY B)	EMBANK (DC) (TY C) MOD	Furn & Plac Tpsl (Cl 2) (4in)	Furn & Plac Tpsl (Cl 2) (6in)	Cell Fib Mulch Seed	Drill Seed (Temp) (Warm)	Drill Seed (Perm) (Urban) (Clay)	Vegetative Watering	SOIL RET BLNKT (CL1) (TY A)	SOIL RET BLNKT (CL2)(TY G)	Fl Bs (TyD Gr6 Cl 2) (Comp In Plac)	Apsh Mat (MC-30)	Struct Excav (Sewer)	Struct Excav (Culv Large)	TRENCH EXCAV PROTECT	CL C Conc. (misc.)	Pond Wall (Cast-In-Place)	RIPRAP (CONC.) (CL B)	Rail (TY PR)	Rail (TY C4) (S)	CMP (Gal Stl 12in)	Conc Box Culv (2'x4')	Conc Box Culv (4'x4')	Conc Box Culv (6'x4')
	AC	CY	CY	CY	CY	SY	SY	SY	SY	SY	MG	SY	SY	TONS	GAL	CY	CY	LF	CY	SF	CY	LF	LF	LF	LF	LF	LF
620 Median Pond	–	–	7313	–	892	–	2144	–	1072	2144	54	–	–	–	–	4130	–	2165	81.3	9811	5.1	–	1055	35	–	–	468
LakeCreek Pond 1A	–	–	(2053)	–	–	–	–	–	–	–	–	–	–	–	–	107	–	95	–	–	–	–	–	6	–	–	–
LakeCreek Pond 1B	–	–	(1908)	–	–	–	–	–	–	–	–	–	–	–	–	42	–	54	–	–	–	–	–	6	–	–	–
LakeCreek Pond 1C	–	–	(1657)	–	–	–	–	–	–	–	–	–	–	–	–	7	–	10	–	–	–	–	–	6	–	–	–
Hymeadow Pond 2A	–	–	(3048)	–	–	–	–	–	–	–	–	–	–	–	–	115	–	62	–	–	–	–	–	6	–	–	–
Hymeadow Pond 2B	–	–	(1529)	–	–	–	–	–	–	–	–	–	–	–	–	2	–	7	–	–	–	–	–	6	–	–	–
Hymeadow Pond 2C	–	–	(2260)	–	–	–	–	–	–	–	–	–	–	–	–	50	–	34	–	–	–	–	–	6	–	–	–
Hymeadow Pond 2D1	–	–	(3286)	–	–	–	–	–	–	–	–	–	–	–	–	212	–	124	–	–	–	–	–	6	–	–	–
Hymeadow Pond 2D2	–	–	(4381)	–	–	–	–	–	–	–	–	–	–	–	–	1893	–	735	–	–	–	–	–	6	–	–	–
Pond Springs Pond	1.04	93	5300	–	441	–	5056	–	2420	4840	121	1403	–	45	–	1656	–	336	57.8	5002	78	–	–	13	–	44	–
Pond Springs Detention Pond	1.15	1162	22610	308	–	1459	2780	–	3391	6782	279	363	2186	141	50	2056	756	1135	–	24431	280	120	140	0	–	–	–
Woods Pond	7.1	2640	64420	1202	8970	–	34364	437	18275	36550	859	6500	6500	275	–	2016	–	649	–	–	166.5	–	–	75	152	–	–
TOTAL	9.29	3895	99643	1510	10303	1459	44,344	437	25158	50316	1313	8266	8686	461	50	12286	756	5406	139.1	39244	529.6	120	1195	171	152	44	468

	ITEM 462	ITEM 462	ITEM 462	ITEM 462	ITEM 462	ITEM 462	ITEM 464	ITEM 464	ITEM 464	ITEM 464	ITEM 465	ITEM 465	ITEM 465	ITEM 465	ITEM 466	ITEM 466	ITEM 466	ITEM 466	ITEM 466	ITEM 466	ITEM 466	ITEM 467	ITEM 481	ITEM 481	ITEM 481	ITEM 481	ITEM 529	ITEM 530
	Conc Box Culv (4'x4')	Conc Box Culv (6'x4')	Conc Box Culv (6'x5')	Conc Box Culv (7'x4')	Conc Box Culv (8'x4')	Conc Box Culv (8'x6')	RCP SEW (D-LOAD) (18")	RCP SEW (D-LOAD) (24")	RCP SEW (D-LOAD) (36")	RCP SEW (D-LOAD) (48")	MAN H (COMPL) TY A	INLET (COMPL) (DROP) (TY I)	INLET (COMPL) (DROP) (TY IB)	INLET (COMPL) (DROP) (TY II)	CULV HDWLL TY PW-45	CULV HDWLL TY MCW-P-15 MOD	CULV HDWLL TY MCW-P-30 MOD	CULV HDWLL TY MCW-P-45 MOD	CULV HDWLL TY MCW-F1-30	CULV HDWLL TY FW-N	CULV HDWLL TY FW-45	S.E.T. TYII	* P.V.C. PIPE (SCH 40) 4"	* P.V.C. PIPE (SCH 40) 6"	* P.V.C. PIPE (SCH 40) 8"	* P.V.C. PIPE (SCH 40) 12"	* CONC. CURB (TY II) (6 IN)	CONC. DRVWY
	LF	LF	LF	LF	LF	LF	LF	LF	LF	LF	EA	EA	EA	EA	EA	EA	EA	EA	EA	EA	EA	EA	LF	LF	LF	LF	LF	SY
620 Median Pond	–	468	–	–	–	–	1487	–	–	210	–	–	–	–	–	–	–	–	–	–	–	1	324	–	77	–	–	21
LakeCreek Pond 1A	–	–	–	–	–	–	–	–	–	–	–	–	–	–	–	–	–	–	–	–	–	–	144	25	100	–	–	–
LakeCreek Pond 1B	–	–	–	–	–	–	–	–	–	–	–	–	–	–	–	–	–	–	–	–	–	–	114	24	58	–	–	–
LakeCreek Pond 1C	–	–	–	–	–	–	–	–	–	–	–	–	–	–	–	–	–	–	–	–	–	–	120	25	14	–	–	–
Hymeadow Pond 2A	–	–	–	–	–	–	6	–	–	–	1	–	–	–	–	–	–	–	–	–	–	–	138	25	65	–	–	–
Hymeadow Pond 2B	–	–	–	–	–	–	–	–	–	–	–	–	–	–	–	–	–	–	–	–	–	–	63	25	11	–	–	–
Hymeadow Pond 2C	–	–	–	–	–	–	–	–	–	–	–	–	–	–	–	–	–	–	–	–	–	–	156	25	38	–	–	–
Hymeadow Pond 2D1	–	–	–	–	–	–	70	–	–	–	–	–	–	–	–	–	–	–	–	–	–	–	288	25	54	–	–	–
Hymeadow Pond 2D2	–	–	–	–	–	–	735	–	–	–	1	–	–	–	–	–	–	–	–	–	–	–	252	27	5	–	–	–
Pond Springs Pond	44	–	–	–	–	–	–	–	–	–	–	–	–	–	–	–	–	–	–	–	–	–	704	–	357	–	–	42
Pond Springs Detention Pond	–	–	96	–	81	84	–	136	287	563	2	3	1	3	–	2	2	–	–	1	–	–	–	–	–	–	90	30
Woods Pond	–	–	30	175	333	28	66	–	–	–	–	2	–	–	1	–	–	1	1	–	1	6	–	–	–	75	–	37
TOTAL	44	468	126	175	414	112	2364	136	287	773	4	5	1	3	1	2	2	1	1	1	1	7	2303	201	779	75	90	130

	ITEM 531	ITEM 550	ITEM 550	ITEM 550	ITEM 3116	ITEM 3116	ITEM 3116	ITEM 5014	ITEM 5014	ITEM 5014	ITEM 8608
	CONC. WALKWAY (5 IN)	CHAIN LINK FENCE (6FT)	VEH. GATE (DOUBLE) (12FT)	VEH. GATE (DOUBLE) (20FT)	ASPH CONC (TY C) (SURF) (PV 32 MIN)	ASPH CONC. (TY C) 2"	ASPH CONC. (TY C) 1½"	GABIONS (3'X1') (GALV)	GABIONS (3'X3') (GALV)	GABIONS (6'X0.5') (GALV)	SAND FILTER SYSTEM
	SY	LF	EA	EA	TONS	TONS	TONS	CY	CY	CY	EA
620 Median Pond	–	–	–	2	–	–	–	–	20	6.7	1 (60'X64')
LakeCreek Pond 1A	–	–	–	–	–	–	–	6.6	10	–	1 (29'X30')
LakeCreek Pond 1B	–	–	–	–	–	–	–	6.6	10	–	1 (24'X30')
LakeCreek Pond 1C	–	–	–	–	–	–	–	6.6	10	–	1 (25'X30')
Hymeadow Pond 2A	–	–	–	–	–	–	–	6.6	10	–	1 (28'X30')
Hymeadow Pond 2B	–	–	–	–	–	–	–	6.6	10	–	1 (15'X30')
Hymeadow Pond 2C	–	–	–	–	–	–	–	6.6	10	–	1 (29'X30')
Hymeadow Pond 2D1	–	–	–	–	–	–	–	6.6	10	–	1 (30'X37')
Hymeadow Pond 2D2	–	–	–	–	–	–	–	6.6	10	–	1 (30'X47')
Pond Springs Pond	–	1050	2	–	–	8.3	–	–	38	10.3	1 (40'X93')
Pond Springs Detention Pond	46	2060	1	–	12	4.1	7.7	–	–	–	–
Woods Pond	–	2010	1	–	–	56.2	–	–	–	–	–
TOTAL	46	5120	4	2	12	68.6	7.7	52.8	138	17.0	10

NOTES:

( ) INCIDENTAL. FOR CONTRACTOR'S INFORMATION ONLY.

* SUBSIDIARY TO VARIOUS BID ITEMS.

Turner Collie & Braden Inc.
ENGINEERS • PLANNERS • PROJECT MANAGERS

AUSTIN | Job No. 61-99100-012 | File

©1998 TxDOT

US 183
WATER QUALITY AND DETENTION POND SUMMARY SHEET

SCALE: AS NOTED

Designed	FED. RD. DIV. NO.	STATE	FEDERAL AID PROJECT NO.		HIGHWAY NO.
KKY	6	TEXAS	NH 09(556)		US 183
Drawn	STATE DIST. NO.	COUNTY	CONTROL NO.	SECTION NO.	JOB NO.	SHEET NO.
JAM	AUS	WILLIAMSON	0151	05	072	48
Checked						
DLG						

DATE: 04/10/99
JOB No.: 72-07401-022
PATH: t:\ 07401022\drainage\wqptbl2.dgn

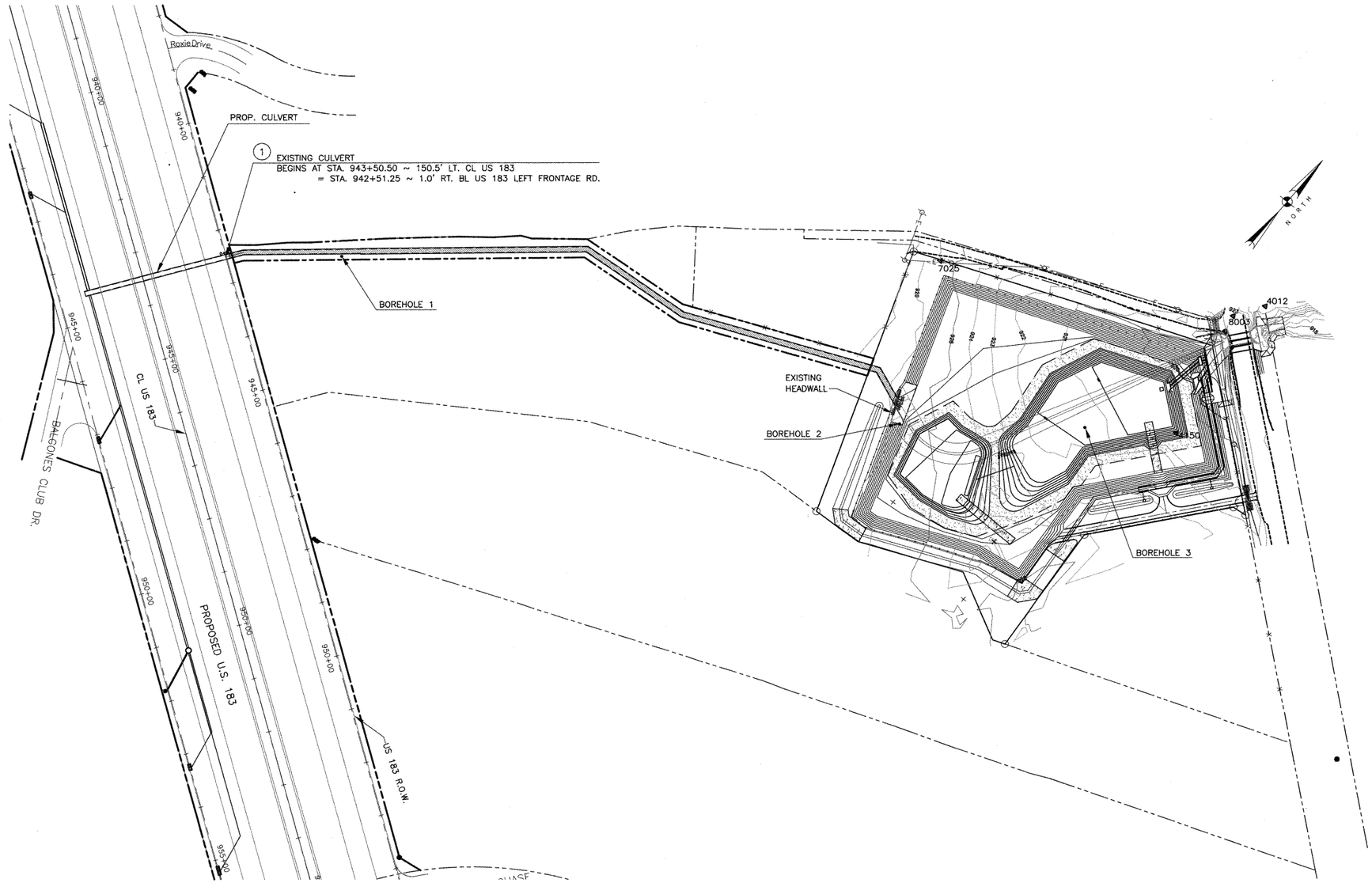

LEGEND

- EXIST. RIGHT OF WAY
- 940 EXISTING CONTOUR
- EXIST. PROPERTY LINES
- PROP. CENTERLINE
- PROP. DRAINAGE EASEMENT
- PROP. RIGHT OF WAY
- △ BENCHMARK / CONTROL POINT
- ● BOREHOLE
- EXISTING CULVERT

NOTE:
FOR CURRENT INFORMATION ABOUT GRAVITY & FORCE MAINS IN REFERENCE TO CHANGE ORDER #10, CONTACT CITY OF AUSTIN WATER & WASTEWATER DEPT.

NOTE:

LOCATIONS OF BOREHOLES ARE APPROXIMATE.

COORDINATES

	X	Y	FL
1	2804263.4886	291081.4969	923.96

CONTROL POINTS

No.	NORTHING	EASTING	ELEVATION	DESCRIPTION
4012	292191.56	2805729.13	919.38	PK NAIL IN ASPHALT
4150	291910.18	2805755.54	920.60	1/2" IRON ROD
7025	291888.61	2805235.45	925.93	BRASS DISK IN CONCRETE
8003	292111.74	2805704.69	922.97	NAIL WITH SHINER IN ASPHALT

PLAN
SCALE: 1"=50'

STATE OF TEXAS
C. D. BILLS
83877
LICENSED
PROFESSIONAL ENGINEER
C.D. Bills 5-3-99

Turner Collie & Braden Inc.
ENGINEERS • PLANNERS • PROJECT MANAGERS

AUSTIN | Job No. 72-07401-022 | File

Texas Department of Transportation

© 1996 TxDOT

WOODS POND WATER QUALITY AND DETENTION POND LAYOUT

		FED. RD. DIV. NO.	STATE	FEDERAL AID PROJECT NO.				HIGHWAY NO.
Designed	CDB							
Checked	DLG	6	TEXAS	NH 99(556)				U.S.183
Drawn	GWS	STATE DIST. NO.	COUNTY	CONTROL NO.	SECTION NO.	JOB NO.		SHEET NO.
Checked	DLG	AUS	WILLIAMSON	0151	05	072		260a

DATE: 04/29/99
JOB NO. T/183SEC1/DRAWING/ss5-wdova.dwg

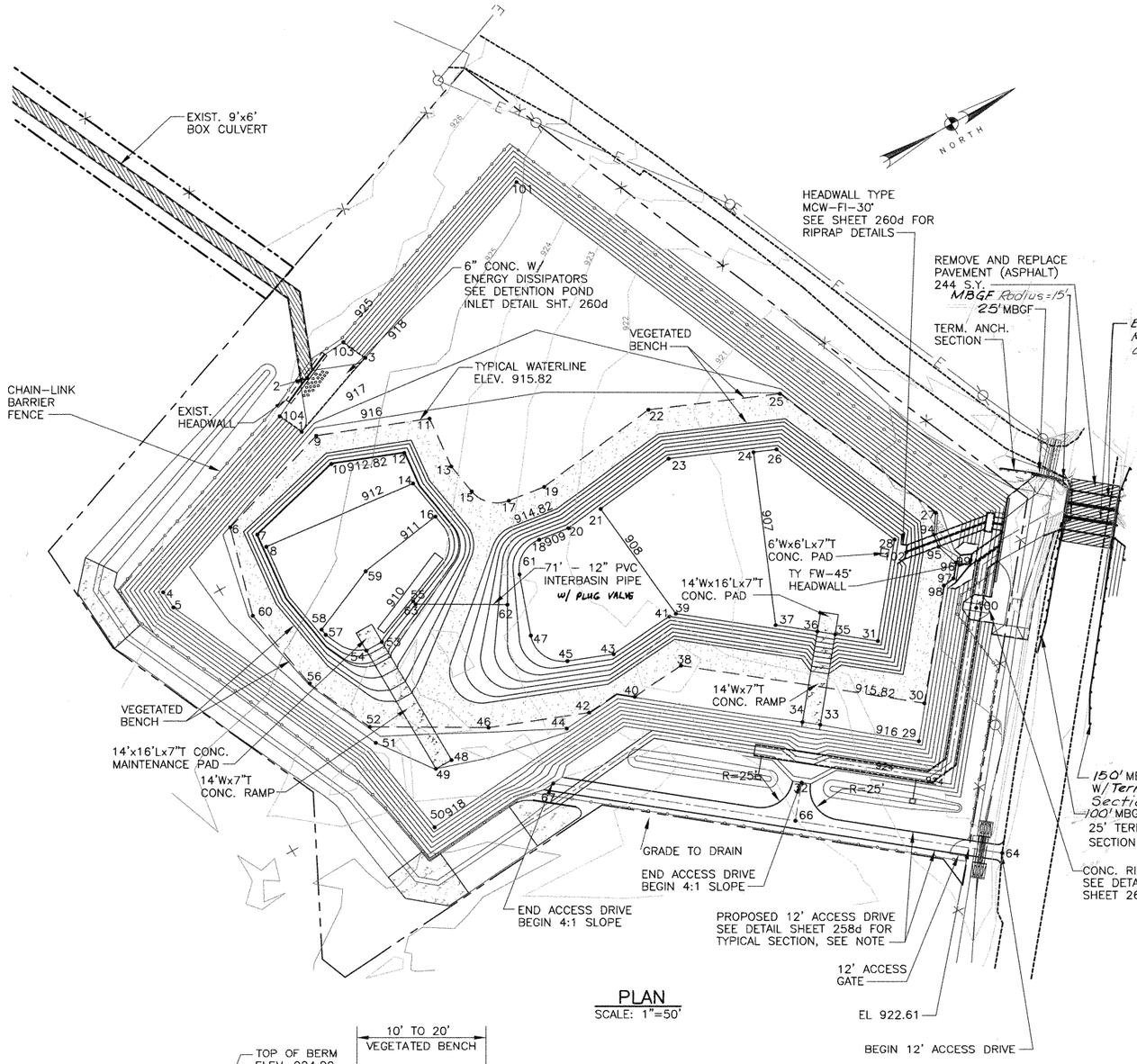

PLAN
SCALE: 1"=50'

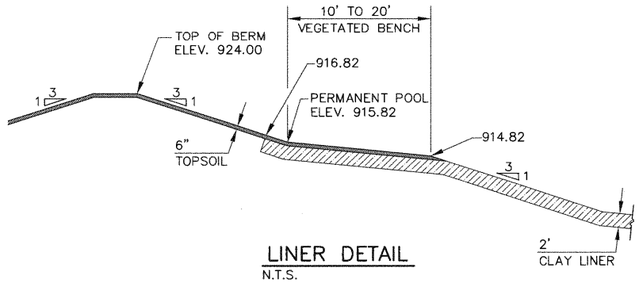

LINER DETAIL
N.T.S.

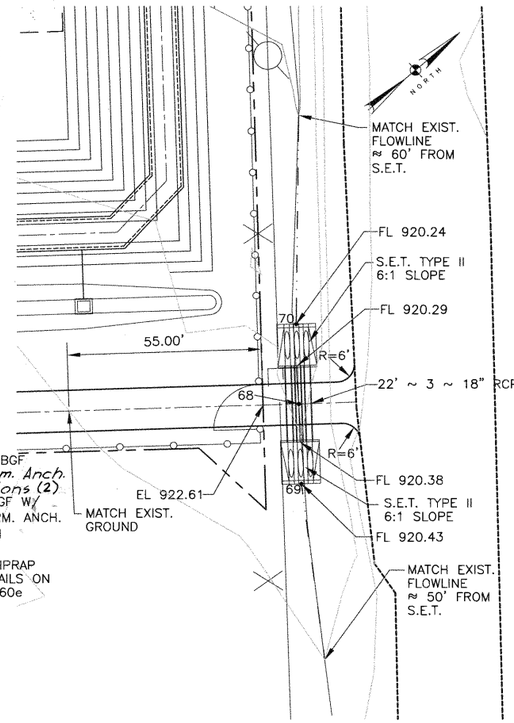

PLAN - DRIVE CULVERTS
SCALE: 1"=20'

NOTES:

1. FINISHED GRADE OF ACCESS ROAD SHALL ALLOW DRAINAGE FLOW ACROSS ROAD TO DITCH.
2. SEE SHT. 260d FOR REINFORCEMENT DETAIL FOR CONC. RAMP AND CONC. MAINTENANCE PADS.
3. PAVEMENT STRUCTURE SHALL BE DETERMINED BY ENGINEER.

POINT LOCATION TABLE

POINT No.	N	E	
POND - CONT.			
94	291999.90	2805691.36	915.82
95	291998.30	2805701.40	915.82
96	292003.62	2805719.24	915.82
97	291995.73	2805728.96	915.82
98	291986.45	2805730.09	915.82
99	292014.50	2805723.04	917.60
100	291999.26	2805758.01	922.00
101	291859.57	2805287.42	918.00
102	291973.96	2805692.37	908.55
103	291679.71	2805330.05	925.00
104	291607.56	2805356.11	925.00
ACCESS DRIVEWAY			
64	291918.66	2805938.19	
66	291792.44	2805835.78	
67	291644.71	2805715.92	
CL ~ 3 ~ 18" RCP			
68	291906.19	2805928.07	
69	291891.70	2805945.93	
70	291920.68	2805910.21	

POINT LOCATION TABLE

POINT No.	N	E	ELEV.
POND			
1	291620.18	2805373.99	
2	291641.04	2805340.74	
3	291685.34	2805373.99	
4	291459.30	2805431.98	918.00
5	291460.02	2805446.37	918.00
6	291530.18	2805413.33	915.82
7	291545.49	2805428.79	912.82
8	291546.68	2805440.64	912.00
9	291624.37	2805383.73	915.82
10	291623.28	2805409.05	912.82
11	291707.25	2805415.85	915.82
12	291676.58	2805429.70	912.82
13	291702.75	2805457.37	915.82
14	291670.40	2805454.05	912.00
15	291706.61	2805482.24	915.82
16	291672.23	2805485.45	911.00
17	291727.86	2805503.17	91582
18	291732.79	2805541.68	909.00
19	291757.22	2805507.27	915.82
20	291756.93	2805545.05	909.00
21	291786.33	2805544.44	908.00
22	291857.77	2805494.82	915.82
23	291851.98	2805536.31	908.00
24	291911.53	2805564.77	907.00
25	291952.51	2805534.92	915.82
26	291928.08	2805571.77	907.00
27	292009.89	2805676.94	915.82
28	291971.58	2805679.44	907.00
29	291907.28	2805828.52	916.00
30	291926.28	2805804.25	915.82
31	291919.91	2805743.12	907.00
32	291811.97	2805811.71	923.00
33	291847.65	2805778.84	916.00
34	291836.78	2805770.02	916.00
35	291893.81	2805721.95	907.00
36	291882.94	2805713.12	907.00
37	291857.48	2805692.47	907.00
38	291777.78	2805683.77	915.82
39	291795.11	2805645.72	908.00
40	291734.38	2805687.53	915.82
41	291789.63	2805645.14	909.00
42	291697.27	2805680.71	915.82
43	291737.02	2805649.70	909.00
44	291675.83	2805683.11	916.00
45	291703.26	2805636.61	909.00
46	291623.61	2805652.16	915.82
47	291688.80	2805604.76	909.00
48	291585.71	2805660.34	916.84
49	291571.71	2805660.27	917.00
50	291547.50	2805700.25	918.00
51	291535.86	2805621.53	918.00
52	291544.15	2805605.58	915.82
53	291586.26	2805551.26	911.00
54	291572.26	2805551.19	911.00
55	291623.58	2805535.18	911.00
56	291520.84	2805552.77	915.82
57	291551.34	2805524.60	911.00
58	291550.56	2805519.51	911.00
59	291603.63	2805496.09	911.00
60	291510.03	2805483.08	915.82
61	291705.84	2805557.90	909.00
62	291685.60	2805574.14	911.00
63	291623.99	2805538.25	912.00

STATE OF TEXAS
C. D. BILLS
83877
LICENSED PROFESSIONAL ENGINEER
9/14/99

Turner Collie & Braden Inc.
ENGINEERS • PLANNERS • PROJECT MANAGERS

AUSTIN | Job No. 72-07401-022

Texas Department of Transportation

© 1998 TxDOT

WOODS POND WATER QUALITY AND DETENTION POND PLAN AND DETAILS

Designed	RAB	FED. RD. DIV. NO.	STATE	FEDERAL AID PROJECT NO.				HIGHWAY NO.
Checked	KKY	6	TEXAS	NH 99(556)				U.S.183
Drawn	GWS	STATE DIST. NO.	COUNTY	CONTROL NO.	SECTION NO.	JOB NO.		SHEET NO.
Checked	CDB	AUS	WILLIAMSON	0151	05	072		260b

DATE: 05/11/99
JOB NO. T:/183SEC1/DRAWING/ss5--wdpd.dwg

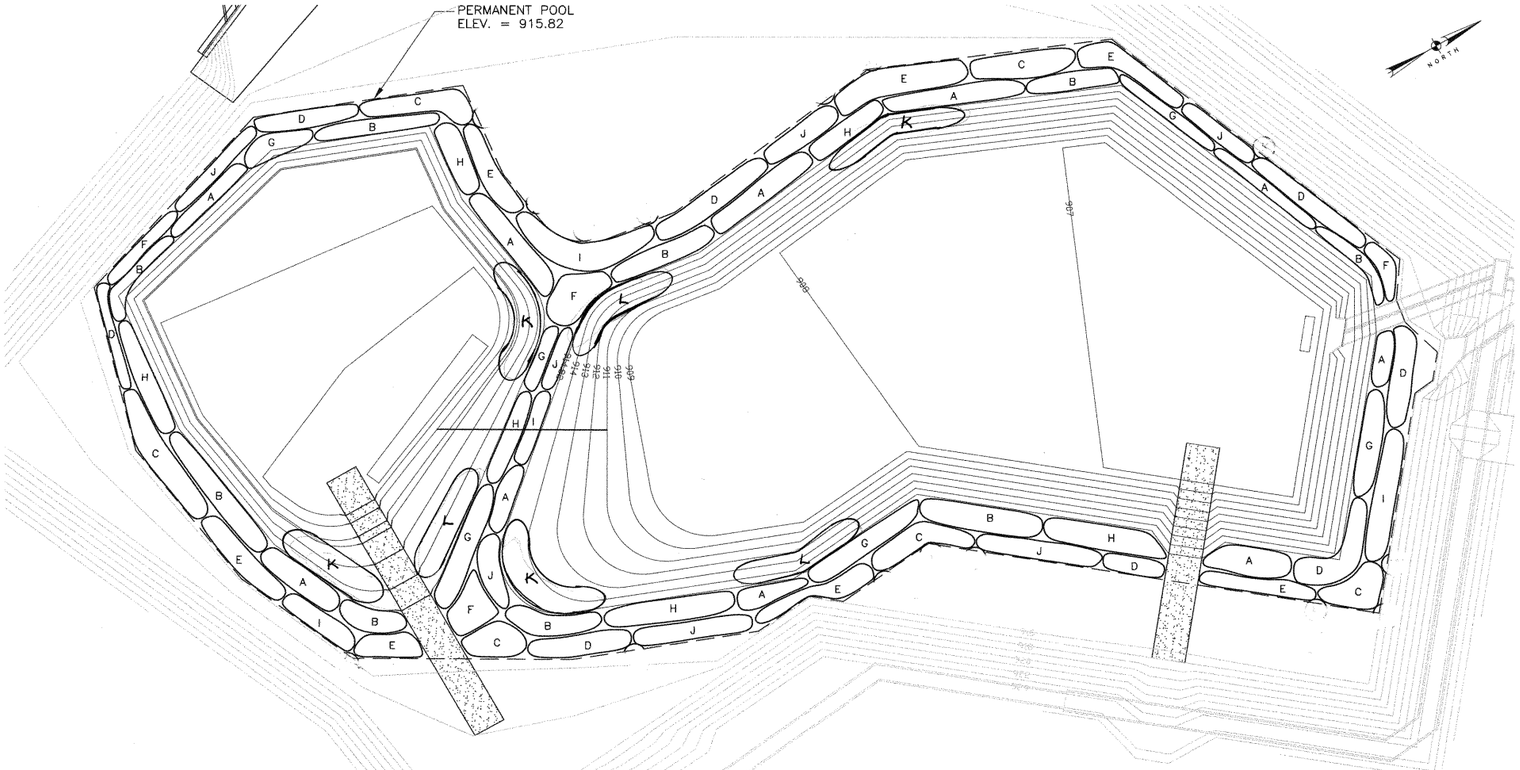

NOTES:

1. ALL PLANTS SHALL BE NURSERY GROWN MATERIAL, WELL ROOTED IN CONTAINERS.
2. THE SUBMERGED PLANTING SHELF SHALL ACCOMMODATE THE PLANTS ALONG THE INSIDE PERIMETER OF THE WATER SURFACE AND ACROSS THE RAISED DIVIDER BETWEEN POND SECTIONS, AS SHOWN. THE SHELF SHALL BE APPROXIMATELY 20' WIDE (AVERAGE) AND SHALL SLOPE FROM 0" TO 12" BELOW THE WATERLINE FROM THE EDGE OF THE POND TO THE EDGE OF THE SHELF.
3. THE SHELF SHALL BE DIVIDED INTO TWO 10" WIDE DEPTH ZONES: THE SHALLOW SIDE EXTENDING 10' FROM THE SHORELINE (0" – 6" DEPTH), AND THE DEEP SIDE CONTINUING FOR THE REMAINING 10' TO THE EDGE OF THE SHELF (6" – 12+" DEPTH). THE PLANTS SHALL BE ARRANGED AND PLANTED ON THE PLANTING SHELF BELOW THE WATERLINE, ACCORDING TO THE DEPTH REQUIREMENTS FOR EACH PLANT, AS SHOWN.
4. PLANTING SHALL TAKE PLACE WHEN POND SURFACE ELEVATION REACHES PERMANENT POOL ELEVATION (915.82).
5. PLANTS SHALL BE PLANTED 3 FEET ON CENTER, IN SIX ALTERNATING OR STAGGERED ROWS ALONG THE SHELF: 3 ROWS OF SHALLOW WATER PLANTS AND 3 ROWS OF DEEPER WATER PLANTS. PLANTINGS SHALL BE CONTINUOUS AROUND THE POND PERIMETER AND ACROSS THE RAISED POND DIVIDER. ALL PLANTS SHALL BE USED.
6. EACH SPECIES OF PLANT SHALL BE MASSED TOGETHER IN GROUPINGS OF ITS OWN KIND WITH A MAXIMUM OF 50 PLANTS IN EACH SINGLE–SPECIES GROUP. GROUPINGS OF THE SAME SPECIES SHALL BE LOCATED IN SEVERAL PLACES AROUND THE POND.

WET POND LANDSCAPING

SCALE: 1"=30'

WET POND SURFACE AREA = 106,339 SF

MINIMUM PLANT QUANITY = (106,339)(0.03) = 3190

PLANT MATERIALS

SYMBOL	COMMON NAME	BOTANICAL NAME	QUANTITY	SIZE/REQUIREMENTS	SHELF AREA WATER DEPTH
(HERBACEOUS PLANTS)					
A	BULRUSH	SCIRPUS VALIDUS	500	1 GAL. 3 – 5 STEMS, 18" MIN. HT.	6" – 12+" (DEEP SIDE)
B	BULRUSH	SCIRPUS CALIFORNICUS	500	1 GAL. 3 – 5 STEMS, 18" MIN. HT.	6" – 12+" (DEEP SIDE)
C	THREE–SQUARE BULRUSH	SCIRPUS AMERICANUS	280	1 GAL. 3 – 5 STEMS, 18" MIN. HT.	2" – 6" (SHALLOW SIDE)
D	SPIKERUSH	ELEOCHARIS MONTEVIDENSIS	320	1 GAL. 3 – 5 STEMS, 12" MIN. HT.	2" – 6" (SHALLOW SIDE)
E	FOUR SQUARE SPIKERUSH	ELEOCHARIS QUADRANGULATA	320	1 GAL. 3 – 5 STEMS, 12" MIN. HT.	2" – 6" (SHALLOW SIDE)
F	FLATSEDGE	CYPERUS OCHRACEUS	180	1 GAL. 3 – 5 STEMS, 12" MIN. HT.	2" – 6" (SHALLOW SIDE)
G	YELLOW FLAG IRIS	IRIS PSEUDACORUS	300	1 GAL. 2 – 3 STEMS, 12" MIN. HT.	6" – 12+" (DEEP SIDE)
H	SOFT RUSH	JUNCUS EFFUSUS	300	1 GAL. 5 – 10 STEMS, 18" MIN. HT.	6" – 12+" (DEEP SIDE)
I	PICKERELWEED	PONTEDRIA CORDATA	180	1 GAL. 3 – 5 STEMS, 18" MIN. HT.	2" – 6" (SHALLOW SIDE)
J	ARROWHEAD	SAGGITARIA LATIFOLIA	320	1 GAL. 3 – 5 STEMS, 18" MIN. HT.	2" – 6" (SHALLOW SIDE)
		TOTAL HERBACEOUS PLANT QUANTITIES =	3200	(1600 ON SHALLOW SIDE OF SHELF, 1600 ON DEEP SIDE OF SHELF)	
(AQUATICS)					
K	COONTAIL	CERATOPHYLLUM SPP.	180	1 GAL.	
L	FANWORT	NYMPHAEA ODORATA	140	1 GAL.	
		TOTAL AQUATIC PLANTS	320	PLANTED IN DEEPER, OFF-SHELF LOCATIONS	

6|8|99

STATE OF TEXAS
KERRY D. BLACKMON
1251
REGISTERED
LANDSCAPE ARCHITECT

Turner Collie & Braden Inc.
ENGINEERS • PLANNERS • PROJECT MANAGERS

AUSTIN | Job No. 72-07401-022 | File

Texas Department of Transportation

© 1998 TxDOT

WOODS POND
WETLAND PLANTING PLAN

Designed	CDB	FED. RD. DIV. NO.	STATE	FEDERAL AID PROJECT NO.			HIGHWAY NO.
Checked	DLG	6	TEXAS	NH 99(556)			U.S.183
Drawn	GWS	STATE DIST. NO.	COUNTY	CONTROL NO.	SECTION NO.	JOB NO.	SHEET NO.
Checked	DLG	AUS	WILLIAMSON	0151	05	072	260c

DATE: 05/25/99
JOB NO. c:/183sec1/drowing/ss5-wtpd.dwg

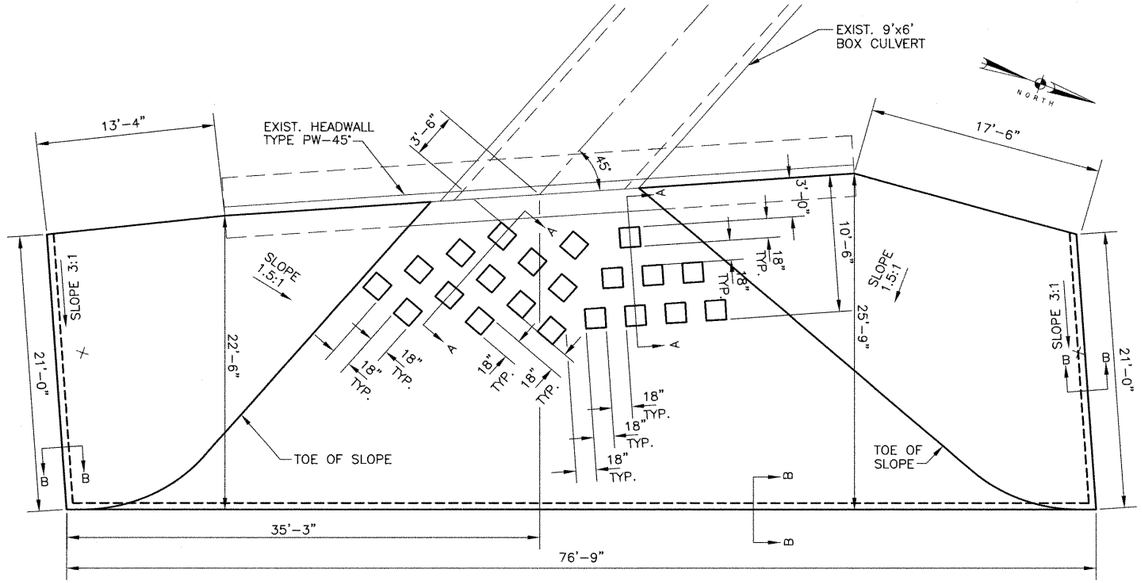

PLAN – DETENTION POND INLET
SCALE: 3/16" = 1'-0"

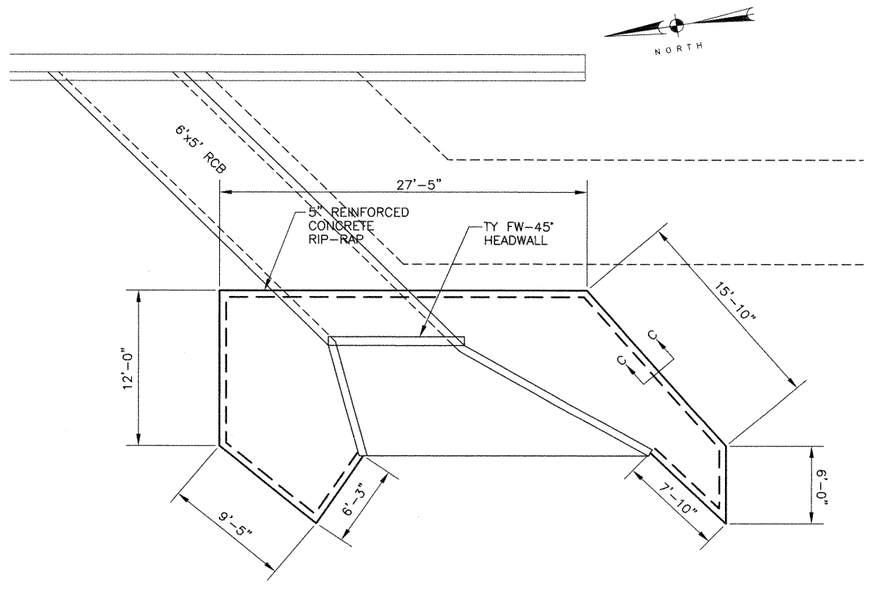

PLAN – DETENTION POND OUTLET
SCALE: 3/16" = 1'-0"

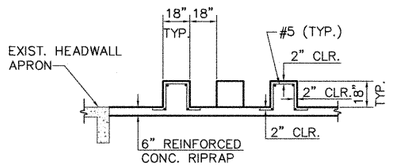

A – A
SCALE: 1/4" = 1'-0"

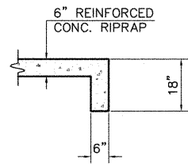

B – B
SCALE: 1/2" = 1'-0"

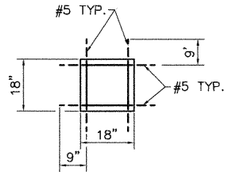

ENERGY DISSIPATOR REBAR PLAN
SCALE: 1/2" = 1'-0"

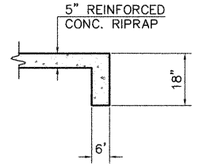

C – C
SCALE: 1/2" = 1'-0"

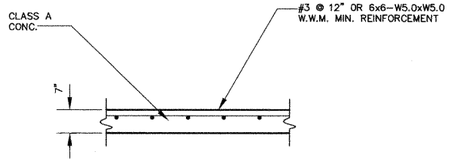

CONCRETE MAINTENANCE PAD AND RAMP REINFORCEMENT DETAIL
SCALE: 1/2" = 1'-0"

STATE OF TEXAS
C. D. BILLS
83877
LICENSED
PROFESSIONAL ENGINEER
C.D. Bills 5-3-99

Turner Collie & Braden Inc.
ENGINEERS • PLANNERS • PROJECT MANAGERS

AUSTIN | 72-07401-022

Texas Department of Transportation

© 1998 TxDOT

WOODS POND WATER QUALITY AND DETENTION POND DETAILS

Designed	CDB	FED. RD. DIV. NO.	STATE	FEDERAL AID PROJECT NO.				HIGHWAY NO.
Checked	DLG	6	TEXAS	NH 99(556)				U.S.183
Drawn	GWS	STATE DIST. NO.	COUNTY	CONTROL NO.	SECTION NO.	JOB NO.		SHEET NO.
Checked	DLG	AUS	WILLIAMSON	0151	05	072		260d

DATE: 04/29/99
JOB NO. T:/183SEC1/DRAWING/ss5--wpd3.dwg

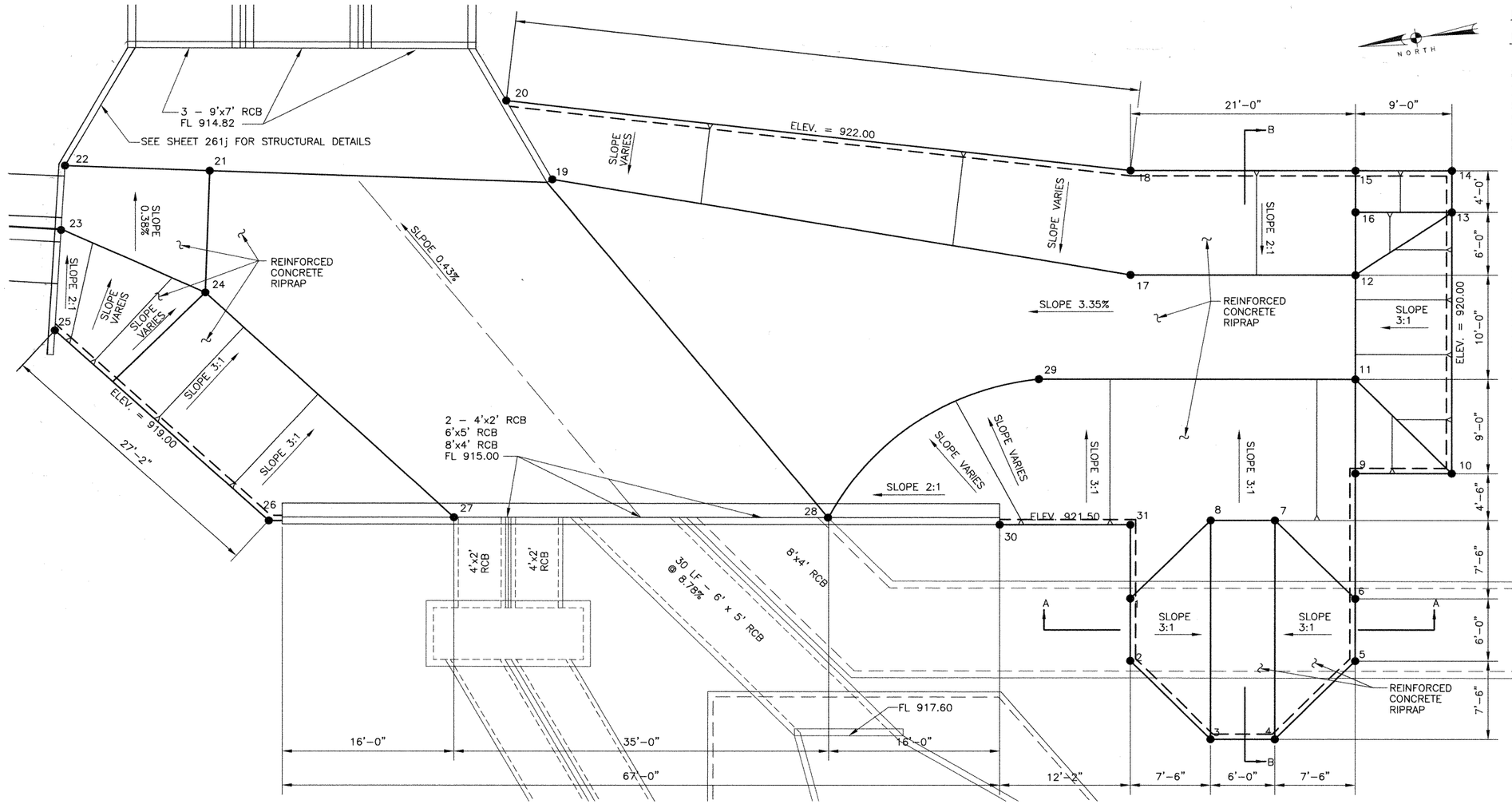

POINT LOCATION TABLE

POINT No.	N	E	ELEV.
RIPRAP			
1	292008.20	2805751.75	924.00
2	292003.54	2805747.97	924.00
3	291992.99	2805749.07	921.50
4	291989.21	2805753.73	921.50
5	291990.31	2805764.28	924.00
6	291994.97	2805768.06	924.00
7	292005.52	2805766.96	921.50
8	292009.30	2805762.30	921.50
9	292004.29	2805775.62	920.00
10	291998.62	2805782.61	920.00
11	292011.28	2805781.29	917.00
12	292019.04	2805787.59	917.00
13	292018.03	2805798.36	920.00
14	292021.14	2805800.88	922.00
15	292026.81	2805793.89	922.00
16	292023.70	2805791.37	920.00
17	292032.28	2805771.28	916.50
18	292040.04	2805777.58	922.00
19	292073.37	2805735.11	914.82
20	292081.89	2805736.48	922.00
21	292094.13	2805710.78	914.82
22	292103.01	2805700.58	914.82
23	292098.52	2805696.48	914.82
24	292085.32	2805703.11	914.86
25	292091.34	2805689.91	919.00
26	292064.63	2805693.96	919.00
27	292054.00	2805707.59	915.00
28	292031.97	2805734.76	915.00
29	292029.89	2805758.35	916.50
30	292021.38	2805746.73	921.50
31	292013.70	2805756.20	921.50

PLAN – WOODS POND – RIPRAP

SCALE: 3/16" = 1'–0"

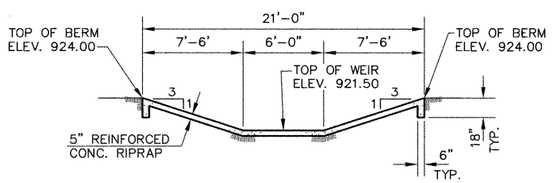

SECTION A–A

SCALE: 3/16" = 1'–0"

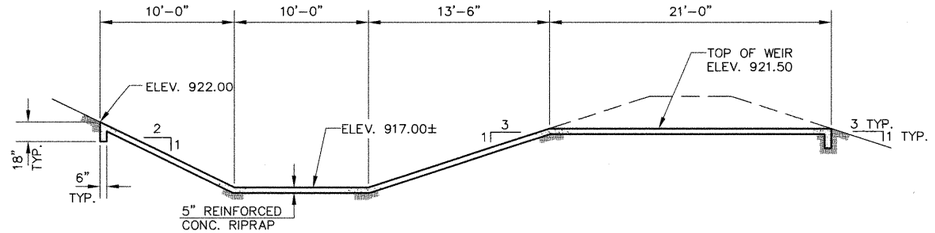

SECTION B–B

SCALE: 3/16" = 1'–0"

STATE OF TEXAS
C.D. BILLS
83877
LICENSED PROFESSIONAL ENGINEER
C.D. Bills
5-3-99

Turner Collie & Braden Inc.
ENGINEERS • PLANNERS • PROJECT MANAGERS

Unit	Job No.	File
AUSTIN	72-07401-022	

Texas Department of Transportation

© 1998 TxDOT

WOODS POND WATER QUALITY AND DETENTION POND PLAN AND SECTIONS

Designed	KKY	FED. RD. DIV. NO.	STATE	FEDERAL AID PROJECT NO.				HIGHWAY NO.
Checked	CDB	6	TEXAS	NH 99(556)				U.S.183
Drawn	GWS	STATE DIST. NO.	COUNTY	CONTROL NO.	SECTION NO.	JOB NO.		SHEET NO.
Checked	CDB	AUS	WILLIAMSON	0151	05	072		260e

DATE: 04/29/99
JOB NO. fc/1833EC1/DRAWING/ss5-wpd4.dwg

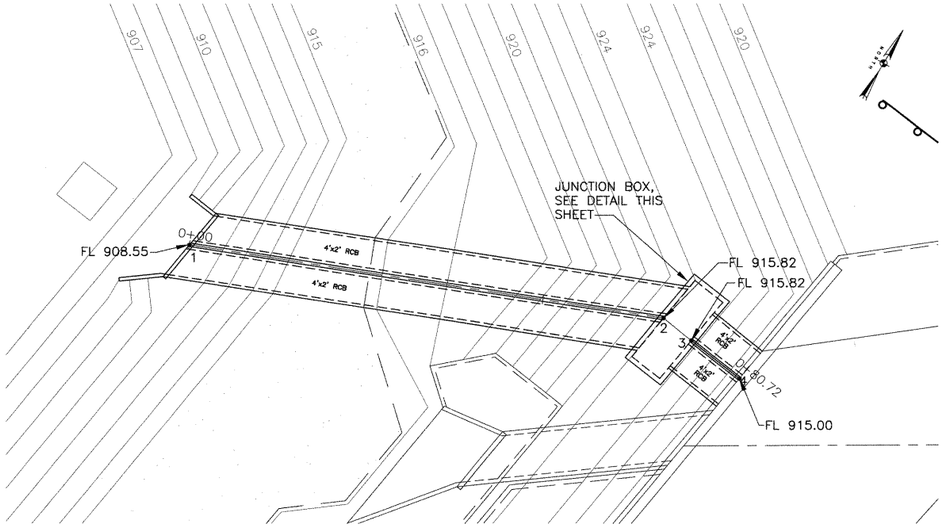

PLAN – DETENTION POND OUTLET

SCALE: 1" = 10'

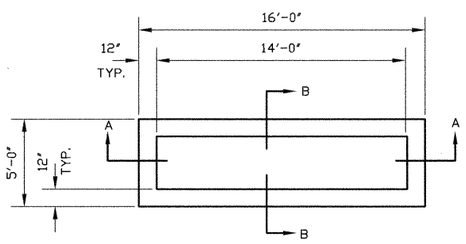

PLAN VIEW

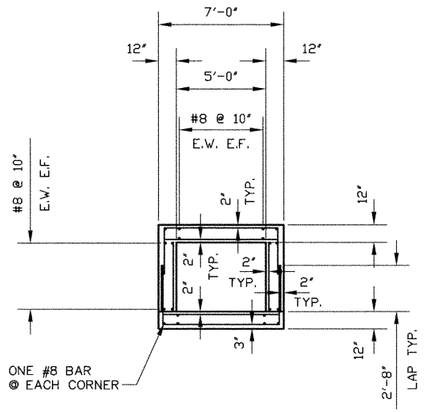

SECTION B–B

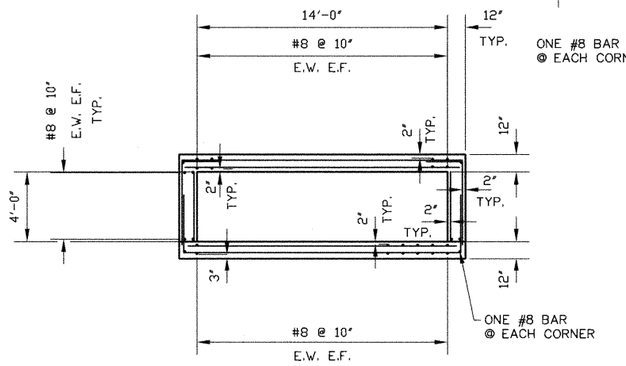

SECTION A–A

JUNTION BOX DETAIL

SCALE: 1/4" = 1'-0"

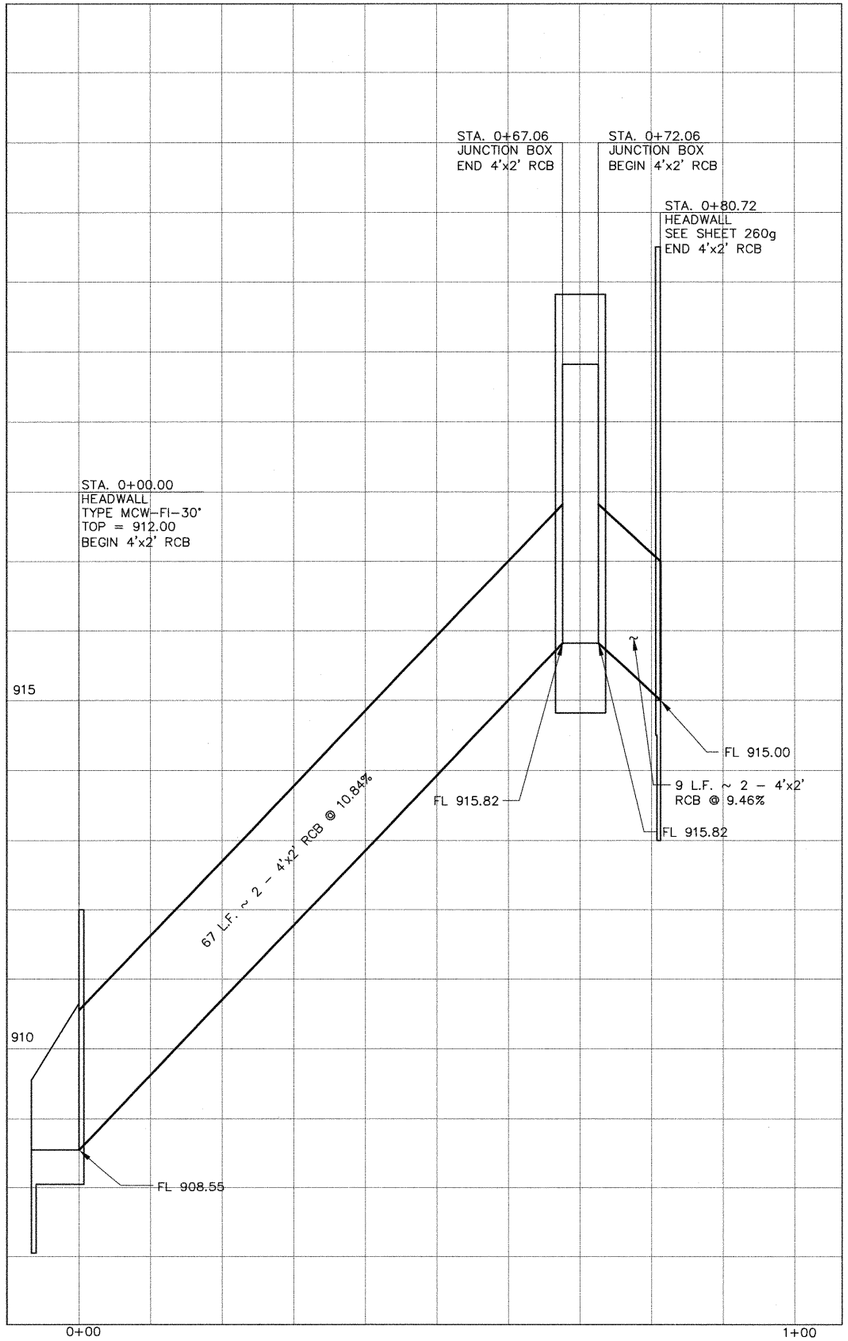

PROFILE – DETENTION POND OUTLET

SCALE: 1" = 10' HORIZONTAL
1" = 1' VERTICAL

POINT LOCATION TABLE

POINT No.	N	E
1	291973.96	2805692.37
2	292040.18	2805702.93
3	292044.06	2805706.08
4	292050.79	2805711.54

STATE OF TEXAS
C.D. BILLS
83877
LICENSED
PROFESSIONAL ENGINEER
5-3-99

Turner Collie & Braden Inc.
ENGINEERS • PLANNERS • PROJECT MANAGERS

AUSTIN | Job No. 72-07401-022

Texas Department of Transportation

© 1998 TxDOT

WOODS POND
WATER QUALITY AND DETENTION POND PLAN AND DETAILS

Designed	CDB	REG. ENG. DIV. NO.	STATE	FEDERAL AID PROJECT NO.				HIGHWAY NO.
Checked	DLG	6	TEXAS	NH 99(556)				U.S.183
Drawn	GWS	STATE DIST. NO.	COUNTY	CONTROL NO.	SECTION NO.	JOB NO.		SHEET NO.
Checked	CDB	AUS	WILLIAMSON	0151	05	072		260f

DATE: 04/29/99
JOB NO. T:/83SEC1/DRAWING/ss5-wpd5.dwg

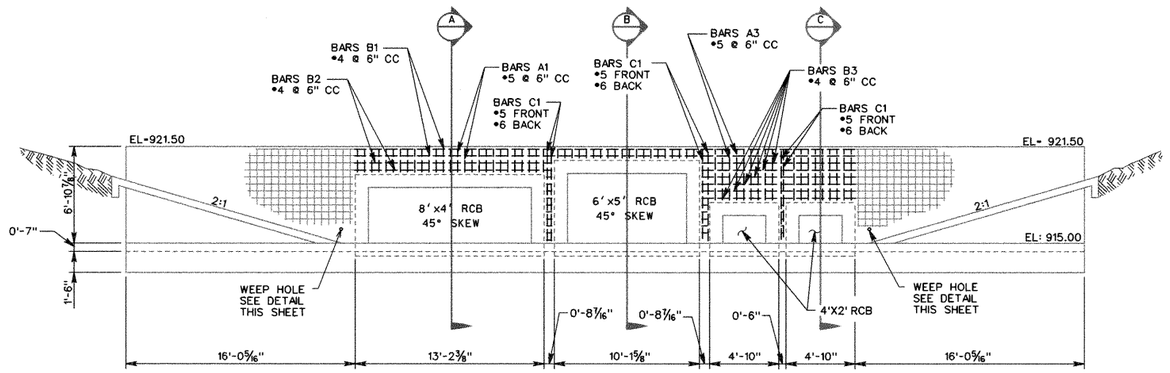

HEADWALL ELEVATION
N.T.S.

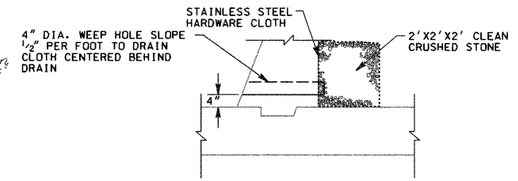

WEEP HOLE DETAIL
N.T.S.

WINGWALL DIMENSIONS

CULVERT SIZE		SLAB	WINGWALL							APPRON
S	H	T	Z	L	R	W	X	D	Y	C
6	5	6"	6'-6"	16'-0 3/8"	7"	4"	8"	2'	1'-4"	34'-11"

A1: L= 1'-6"
A2: L= 2'-6"
B1: L= 38'-11"
B2: L= 15'-2"
B3: L= 12'-2"
C1: L= 6'-6"

NOTE:
REFER TO SHEET 336v PARALLEL WINGS-45° SKEW FOR MULTIPLE BOX CULVERTS 5'X2' TO 10'X10' MCW-P-45° FOR WING WALL DIMENSIONS AND REINFORCEMENT DETAILS.

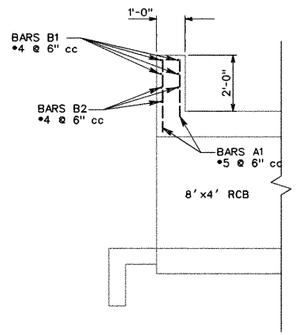

SECTION A-A
N.T.S.

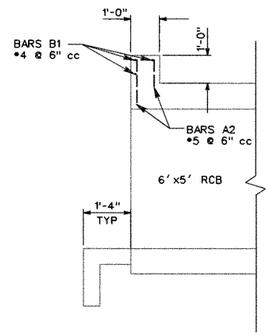

SECTION B-B
N.T.S.

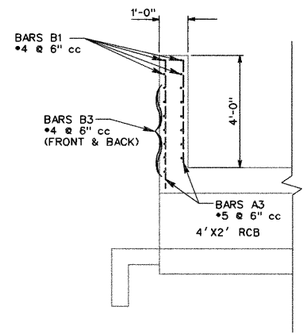

SECTION C-C
N.T.S.

DAVID L. GARRETT
76626
REGISTERED PROFESSIONAL ENGINEER
5/27/99

Turner Collie & Braden Inc.
ENGINEERS • PLANNERS • PROJECT MANAGERS

AUSTIN	72-07401-022	
Unit	Job No.	File

Texas Department of Transportation

©1998 TxDOT

WOODS WATER QUALITY AND DETENTION POND HEADWALL DETAILS

SCALE: AS NOTED

Designed	KKY	FED. RD. DIV. NO.	STATE	FEDERAL AID PROJECT NO.				HIGHWAY NO.
Checked	DLG	6	TEXAS	NH 99(556)				U.S.183
Drawn	JAM	STATE DIST. NO.	COUNTY	CONTROL NO.	SECTION NO.	JOB NO.		SHEET NO.
Checked	DLG	AUS	WILLIAMSON	0151	05	072		260g

DATE: 04-21-99
JOB No.: 72-07401-022
PATH: I:\ 07401022\drainage\wpdt.dgn

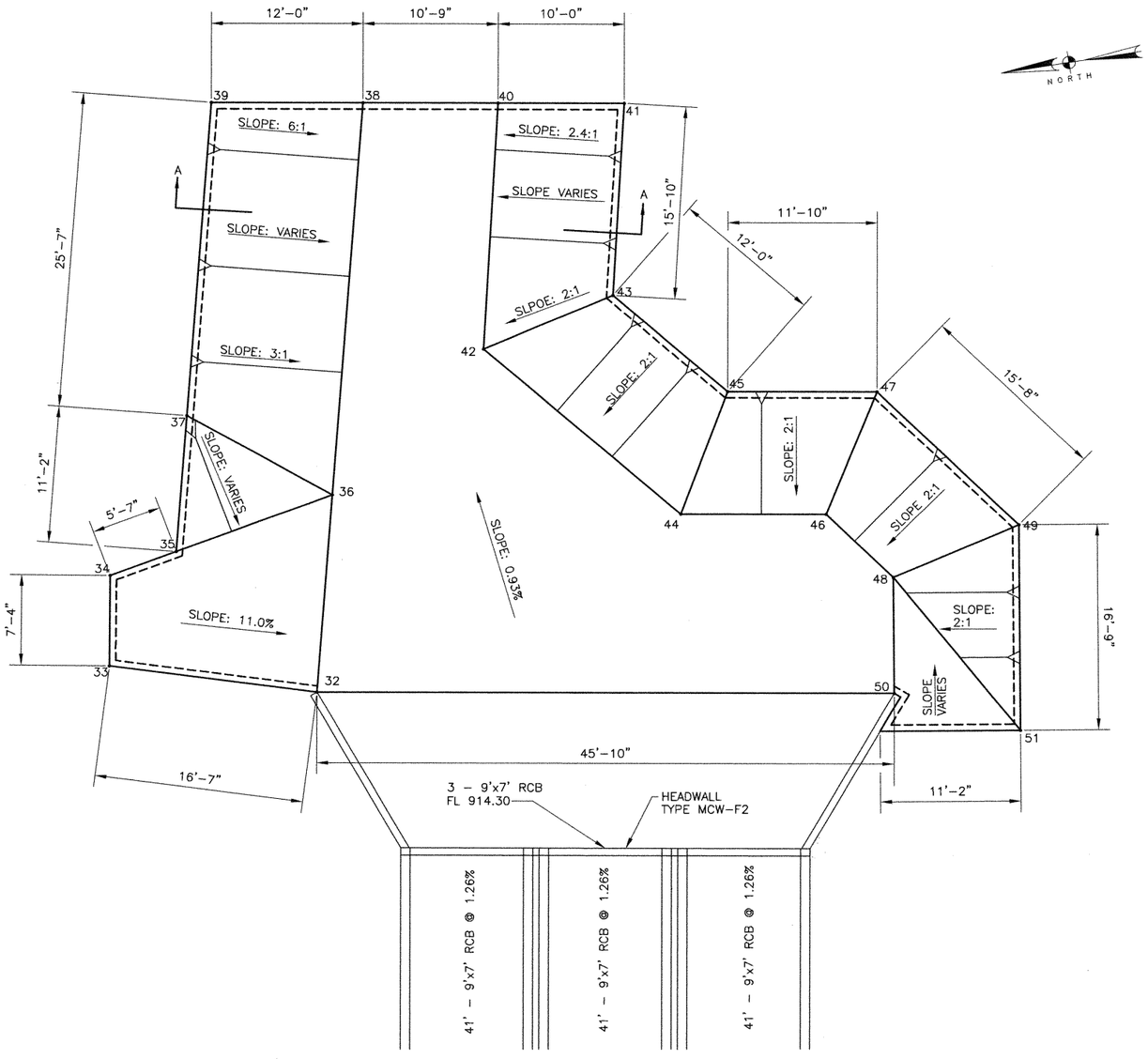

PLAN – WOODS POND – RIPRAP

SCALE: 3/16" = 1'-0"

POINT LOCATION TABLE

POINT No.	N	E	ELEV.
RIPRAP			
32	292153.94	2805740.97	914.30
33	292165.95	2805729.51	916.12
34	292171.62	2805734.19	916.12
35	292169.84	2805739.49	915.58
36	292165.63	2805752.03	914.15
37	292177.93	2805747.15	918.00
38	292188.89	2805774.03	918.80
39	292196.49	2805764.70	915.75
40	292182.12	2805782.35	913.80
41	292175.79	2805790.12	918.00
42	292167.31	2805768.86	914.04
43	292164.23	2805779.58	919.00
44	292146.99	2805772.53	919.10
45	292152.41	2805781.71	919.00
46	292139.71	2805781.48	914.17
47	292144.92	2805790.91	919.00
48	292132.36	2805782.38	914.21
49	292129.40	2805792.82	919.00
50	292124.99	2805776.50	914.30
51	292116.34	2805782.38	919.00

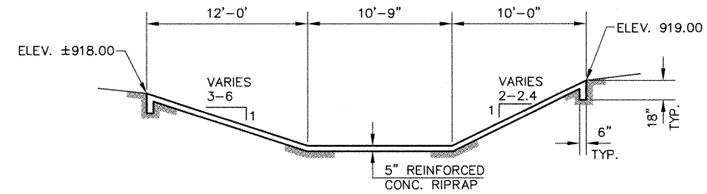

SECTION A–A

SCALE: 3/16" = 1'-0"

DATE: 04/29/99
JOB NO.T:/183SEC1/DRAWING/ss5-wpd6.dwg

Turner Collie & Braden Inc.
ENGINEERS • PLANNERS • PROJECT MANAGERS

AUSTIN | Job No. 72-07401-022

Texas Department of Transportation

©1998 TxDOT

WOODS POND WATER QUALITY AND DETENTION POND PLAN AND SECTIONS

Designed	KKY	FED. RD. DIV. NO.	STATE	FEDERAL AID PROJECT NO.				HIGHWAY NO.
Checked	CDB	6	TEXAS	NH 99(556)				U.S.183
Drawn	GWS	STATE DIST. NO.	COUNTY	CONTROL NO.	SECTION NO.	JOB NO.		SHEET NO.
Checked	CDB	AUS	WILLIAMSON	0151	05	072		260h

STATE OF TEXAS
DAVID L. GARRETT
76626
REGISTERED PROFESSIONAL ENGINEER
6/27/99

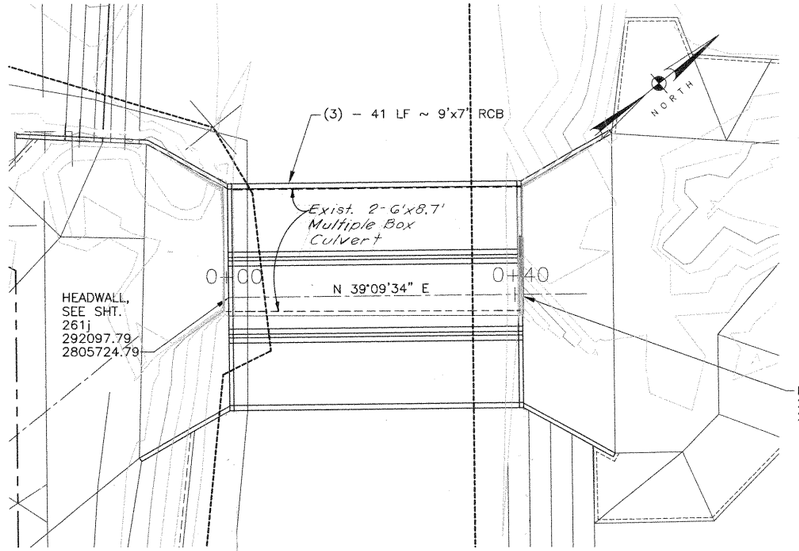

PLAN
SCALE: 1" = 10'

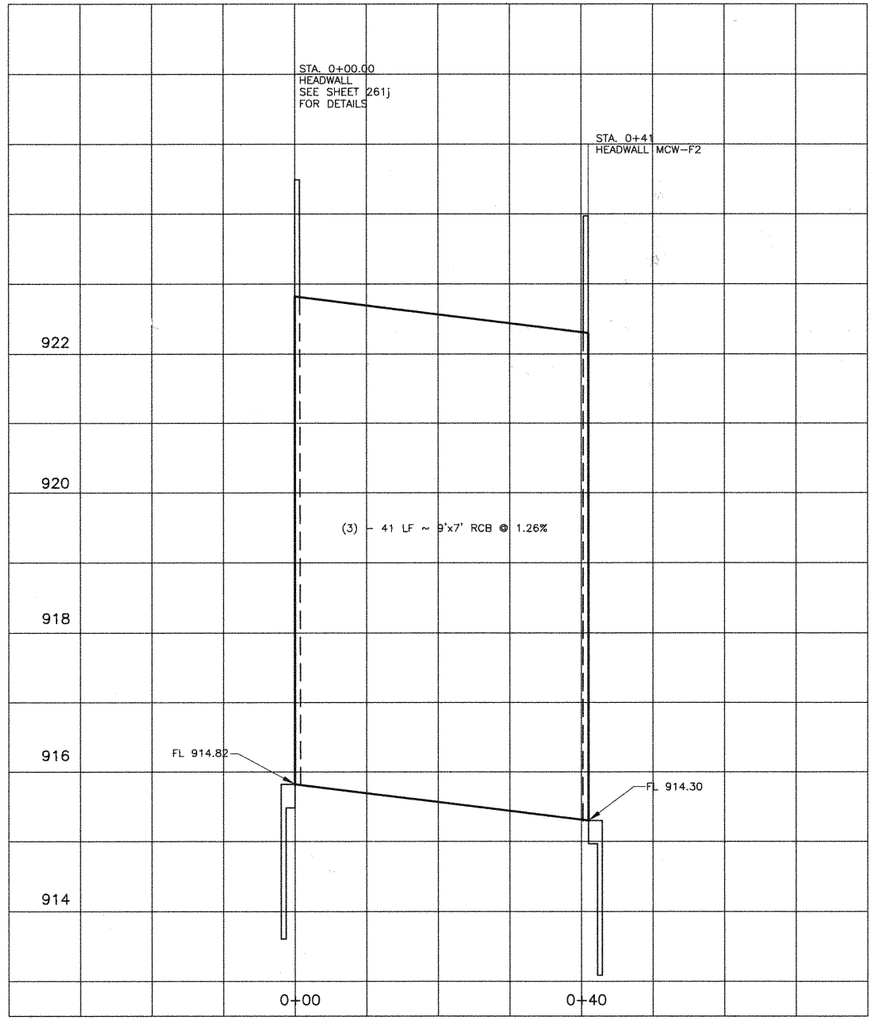

PROFILE
SCALE: 1" = 10' HORIZONTAL
1" = 1' VERTICAL

DAVID L. GARRETT
76626
REGISTERED PROFESSIONAL ENGINEER
STATE OF TEXAS
5/27/99

Turner Collie & Braden Inc.
ENGINEERS • PLANNERS • PROJECT MANAGERS

AUSTIN | Job No. 72-07401-022

Texas Department of Transportation

© 1998 TxDOT

WOODS POND WATER QUALITY AND DETENTION POND PLAN AND PROFILE

Designed	KKY	FED. RD. DIV. NO.	STATE	FEDERAL AID PROJECT NO.				HIGHWAY NO.
Checked	DLG	6	TEXAS	NH 99(556)				U.S.183
Drawn	GWS	STATE DIST. NO.	COUNTY	CONTROL NO.	SECTION NO.	JOB NO.		SHEET NO.
Checked	DLG	AUS	WILLIAMSON	0151	05	072		261i

DATE: 05/25/99
JOB NO. T:/183SEC1/DRAWING/ss5-wppp.dwg

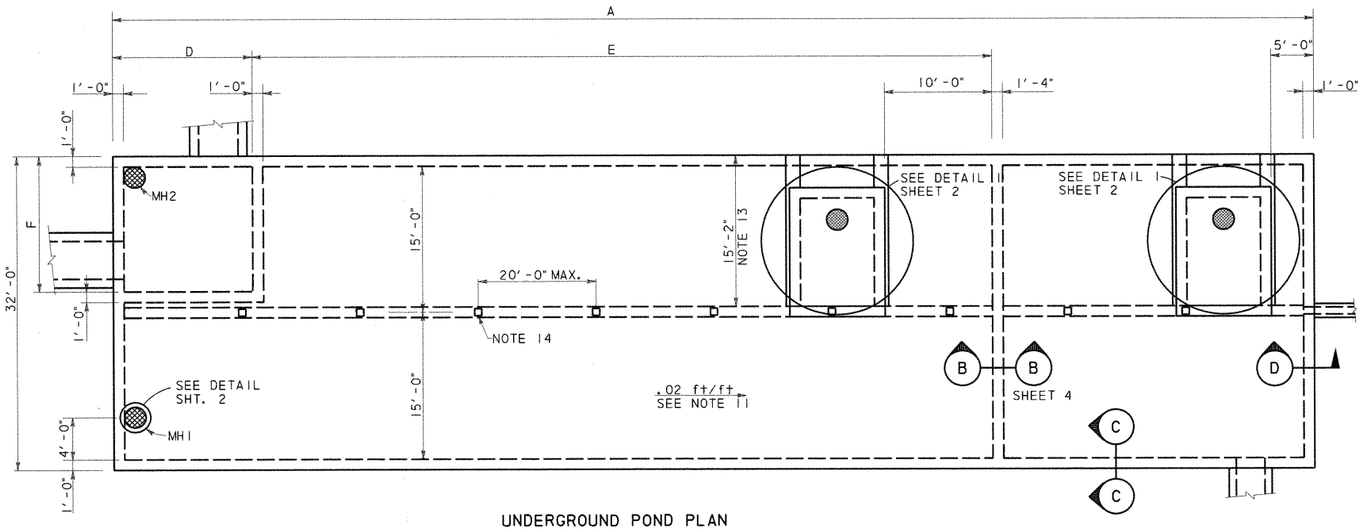

UNDERGROUND POND PLAN

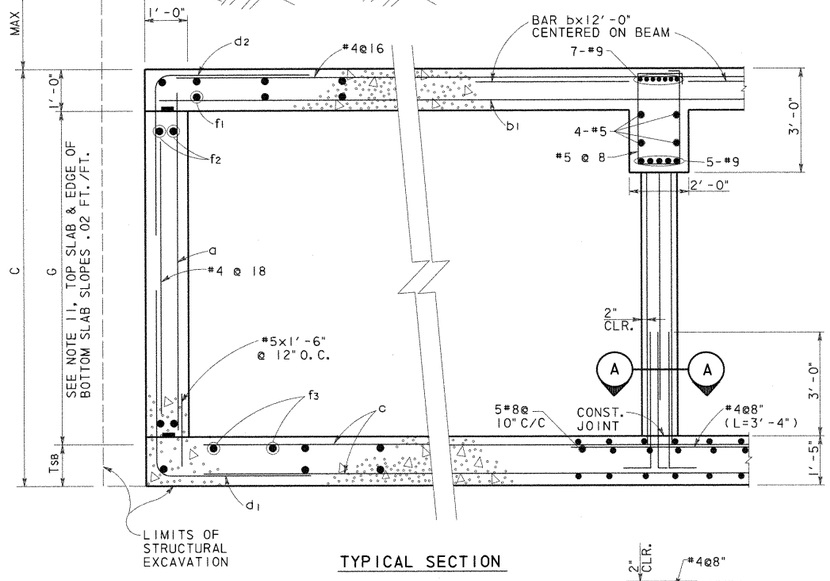

TYPICAL SECTION

SECTION C-C
N. T. S.

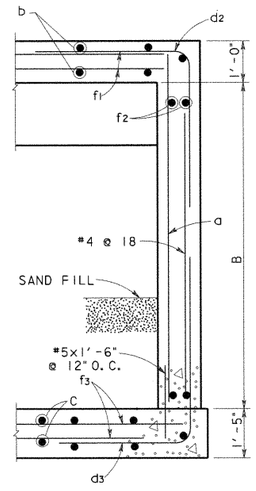

SECTION D-D
N. T. S.

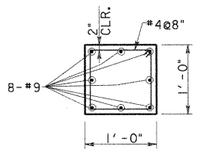

SECTION A-A
SCALE: 1"=1'-0"

UNDERGROUND POND REINFORCING TABLE																		
POND DESIGNATION	BARS a		BARS b		BARS b1		BARS c		BARS d1		BARS d2		BARS d3		BARS f1, f2, f3(#4)			
	SIZE	SPA.	SIZE	SPA.	SIZE	SPA.	SIZE	SPA.	SIZE	SPA.	SIZE	SPA.	SIZE	SPA.	f1 Spa.	f2 Spa.	f3 Spa.	
1A	#6	@12"	#8	@8"	#6	@8"	#8	@10"	#6	@6"	#6	@6"	#6	@6"	@6"	@12"	@7"	
1B	#6	@12"	#8	@8"	#6	@8"	#8	@10"	#6	@6"	#6	@6"	#6	@6"	@6"	@12"	@7"	
1C	#6	@12"	#8	@8"	#6	@8"	#8	@10"	#7	@6"	#6	@6"	#7	@6"	@6"	@12"	@7"	
2A	#6	@12"	#8	@8"	#6	@8"	#8	@10"	#6	@6"	#6	@6"	#6	@6"	@6"	@12"	@7"	
2B	#6	@12"	#8	@8"	#6	@8"	#8	@10"	#6	@6"	#6	@6"	#6	@6"	@6"	@12"	@7"	
2C	#7	@12"	#8	@8"	#6	@8"	#8	@10"	#7	@6"	#6	@6"	#8	@6"	@6"	@12"	@7"	
2D1	#7	@12"	#8	@8"	#6	@8"	#8	@10"	#7	@6"	#6	@6"	#8	@6"	@6"	@12"	@7"	
2D2	#7	@12"	#8	@8"	#6	@8"	#8	@10"	#7	@6"	#6	@6"	#8	@6"	@6"	@12"	@7"	

UNDERGROUND POND DIMENSION TABLE											
POND DESIGNATION	A	B	C	D	E	F	G			MAX FILL	AVERAGE FILL
1A	160'-4"	9'-2"	9'-3"	22'-0"	97'-0"	19'-0"	7'-0"			11'-0"	7'-6"
1B	128'-10"	9'-2"	9'-3"	15'-6"	77'-0"	11'-0"	7'-0"			8'-6"	5'-6"
1C	118'-10"	9'-8"	9'-9"	15'-6"	66'-0"	11'-0"	7'-6"			8'-3"	5'-6"
2A	147'-10"	9'-2"	9'-3"	15'-6"	92'-0"	11'-0"	7'-0"			9'-3"	6'-9"
2B	86'-10"	9'-2"	9'-3"	15'-6"	44'-0"	11'-0"	7'-0"			6'-9"	4'-9"
2C	133'-10"	10'-2"	10'-3"	15'-6"	77'-0"	11'-0"	8'-0"			4'-9"	3'-6"
2D1	181'-4"	10'-2"	10'-3"	22'-0"	110'-0"	13'-0"	8'-0"			11'-10"	7'-3"
2D2	211'-4"	10'-2"	10'-3"	13'-0"	139'-0"	22'-0"	8'-0"			9'-5"	7'-9"

GENERAL NOTES: UNDERGROUND PONDS

1. DESIGNED ACCORDING TO CURRENT AASHTO 1996 STANDARD SPECIFICATIONS.
2. DESIGNED FOR HS20 LOADING AND TO THE MAXIMUM FILL HEIGHT SHOWN.
3. ALL REINFORCING SHALL BE GRADE 60 KSI.
4. ALL CONCRETE SHALL BE CLASS "C".
5. REINFORCING BARS SHALL BE ADJUSTED TO PROVIDE A MINIMUM OF 1½" CLEAR COVER, UNLESS OTHERWISE NOTED.
6. ALL DIMENSIONS ARE IN FEET AND INCHES AND ALL MASS IS IN POUNDS UNLESS OTHERWISE NOTED.
7. SEE POND LAYOUT SHEETS FOR POND ORIENTATION AND LOCATION; PLUS THE ORIENTATION, SIZE AND LOCATION OF INCOMING AND OUTGOING DRAINAGE LINES.
8. WATERSTOPS SHALL BE HYDROPHILIC WATERSTOPS SUCH AS ADEKA MC-2010M.
9. PROVIDE 3" CLEARANCE WHERE CAST AGAINST SOIL.
10. PROVIDE CONSTRUCTION JOINTS IN WALLS AT A MAXIMUM SPACING OF 30 FOOT ON CENTER. MAXIMUM SLAB AREA TO BE PLACED WITHOUT CONSTRUCTION JOINTS IS 3000 SQUARE FEET. SLAB AND WALL CONSTRUCTION JOINTS SHALL ALIGN.
11. SEE POND LAYOUT FOR FLOWLINE. BOTTOM SLAB SHALL PROVIDE A .02 FT/FT SLOPE ALONG THE EDGE OF WALL. PERIMETER WALL HEIGHT (G) SHALL BE CONSTANT.
12. OFF SET RISER TO MISS ROOF SLAB BEAM.
13. AT UNDERGROUND PONDS 2C AND 2D2 THE ACCESS HATCH IS OPPOSITE HAND FROM WHAT IS SHOWN AND IS LOCATED FROM THE OPPOSITE WALL TO AVOID INTERFERENCE WITH THE DRAINAGE DITCH.
14. COLUMN SPACING IS 20.0 FT O.C. MAX. UNLESS NOTED OTHERWISE. THERE WILL BE NO COLUMNS WITHIN THE SPLITTER BOX, WHERE SPLITTER BOX EXTENDS TO THE ROOF BEAM OR BEYOND THE BEAM IS SUPPORTED BY THE SPLITTER BOX WALLS.
15. LAP TOP BARS @ MID SPAN AND BOTTOM BARS @ SUPPORTS.

ESTIMATED QUANTITIES*			
POND DESIGNATION	CONCRETE (CY)	REINFORCING BARS (LBS)	EXCAVATION (CY)
1A	623	144,925	
1B	505	115,855	
1C	476	109,213	
2A	572	131,682	
2B	356	82,752	
2C	536	123,427	
2D1	712	165,990	
2D2	823	191,615	

* QUANTITIES FOR CONTRACTOR'S ESTIMATE ONLY. ALL ITEMS ARE SUBSIDIERY TO THE POND ITEM.

STATE OF TEXAS
WILLY R. BURNS
44162
REGISTERED
ENGINEER
4/2/99

NO. DATE REVISION APPROVED

Turner Collie & Braden Inc.
Engineers • Planners • Project Managers

DATE SUTTON JOB NO. 62-14004-011 ADDENDUM

© 1998 Texas Department of Transportation

US 183

WATER QUALITY PONDS
STRUCTURAL DETAILS

SHEET 1 OF 11

Designed	WRB	FED. RD. DIV. NO.	STATE	FEDERAL AID PROJECT NO.				HIGHWAY NO.
Checked		6	TEXAS	NH99(556)				US 183
Drawn	MR	STATE DIST. NO.	COUNTY	CONTROL NO.	SECTION NO.	JOB NO.		SHEET NO.
Checked		14	WILLIAMSON	151	5	072		261a

UGPDTL1.DGN

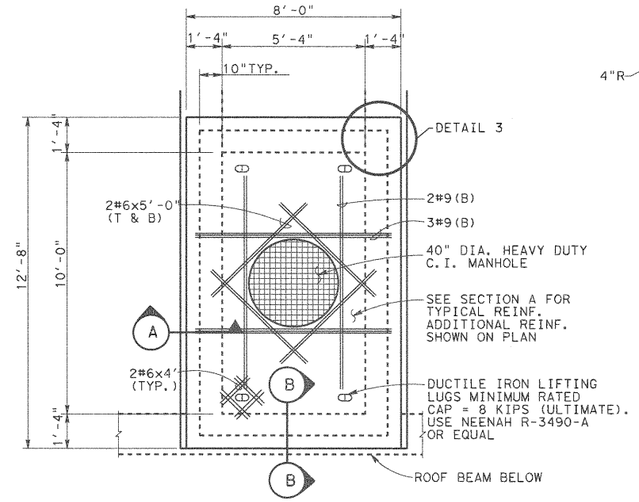

MAINTENANCE ACCESS HATCH

DETAIL 1

SCALE: 3/8" = 1'-0"

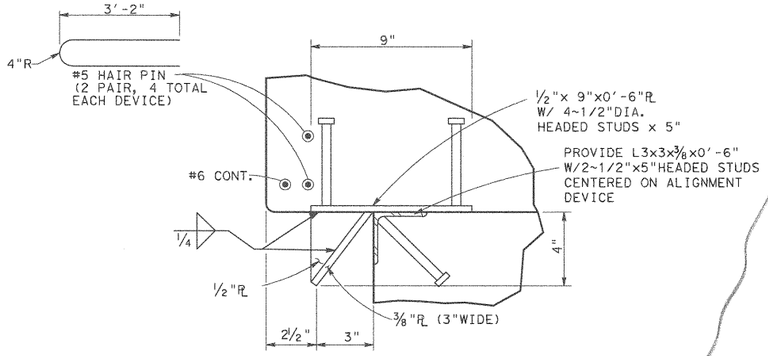

PROVIDE 8 DEVICES (GALV. AFTER FABRICATION) 2 EACH SIDE

DETAIL 2

ALIGNMENT DEVICE

SCALE: 3" = 1'-0"

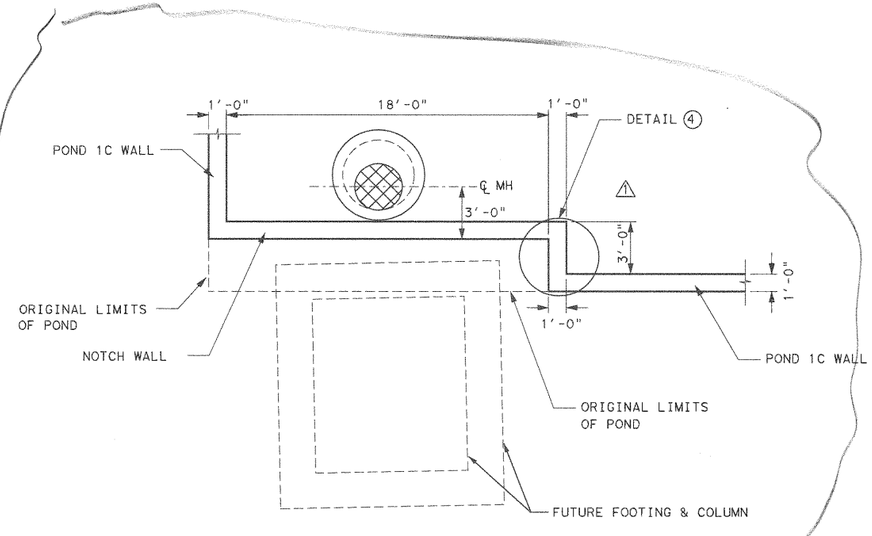

POND 1C MODIFICATION

SCALE: 3" = 1'-0"

SECTION A

SCALE: 1/2" = 1'-0"

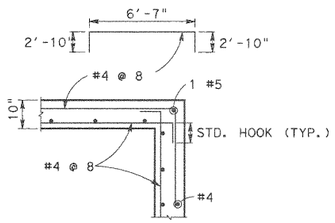

DETAIL 3

HORIZONTAL REINFORCEMENT

SCALE: 1/2" = 1'-0"

ACCESS HATCH		
POND	H1 (±)	ELEV. A
1A	8'-8"	929.20
1B	6'-7"	931.98
1C	6'-7"	931.62
2A	8'-4"	932.04
2B	5'-10"	932.20
2C	4'-10"	933.06
2D1	7'-4"	934.04
2D2	7'-11"	932.50

MANHOLE TABLE		
POND	H2	H3
1A	9'-0"	5'-0"
1B	9'-0"	4'-0"
1C	8'-0"	4'-0"
2A	9'-0"	4'-0"
2B	7'-0"	4'-0"
2C	3'-0"	5'-0"
2D1	10'-0"	4'-0"
2D2	7'-0"	5'-0"

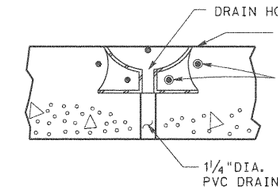

SECTION B

SCALE: 1"= 1'-0"

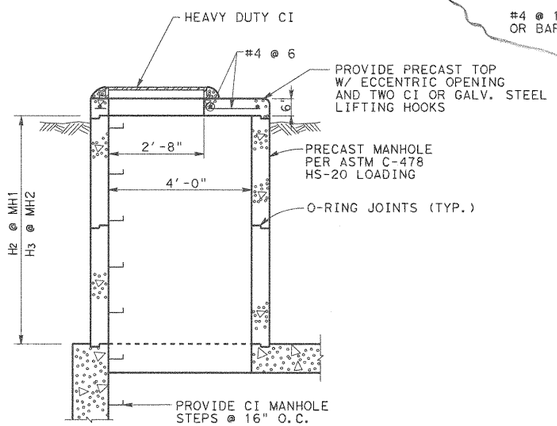

MANHOLE DETAIL

SCALE: 1/2" = 1'-0"

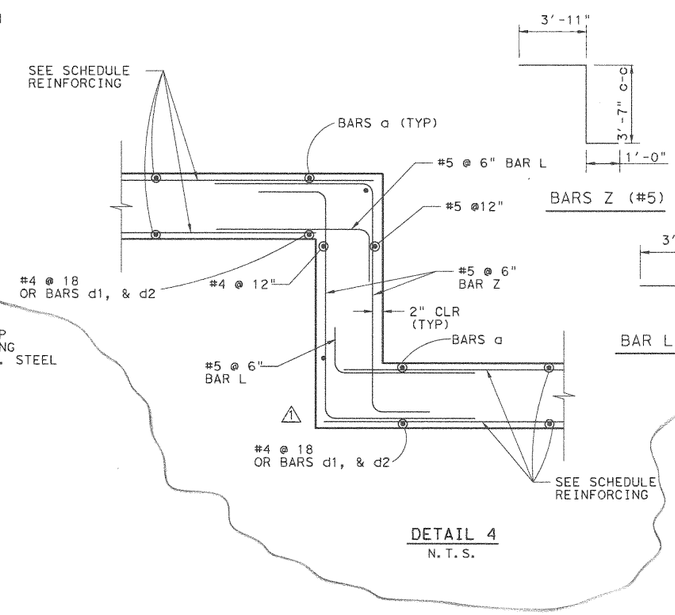

DETAIL 4

N.T.S.

STATE OF TEXAS
WALLY R. BURNS
44162
REGISTERED PROFESSIONAL ENGINEER
Wally R Burns
01/29/01

1	JAN. 26 01	ADD NOTCH	WRB
NO.	DATE	REVISION	APPROVED

Turner Collie & Braden Inc.
Engineers • Planners • Project Managers

TRANSPORTATION | Unit | Job No. 81-07401-024 | Approved

© 1998 Texas Department of Transportation

US 183
WATER QUALITY PONDS
STRUCTURAL DETAILS

SCALE: AS NOTED — SHEET 2 OF 11

Designed	Checked	Drawn	Checked	FED. RD. DIV. NO.	STATE	FEDERAL AID PROJECT NO.				HIGHWAY NO.
WRB		MR		6	TEXAS	NH99(556)				US 183
				STATE DIST. NO.	COUNTY	CONTROL NO.	SECTION NO.	JOB NO.		SHEET NO.
				14	WILLIAMSON	151	5	072		261b

UGPDT2.DGN

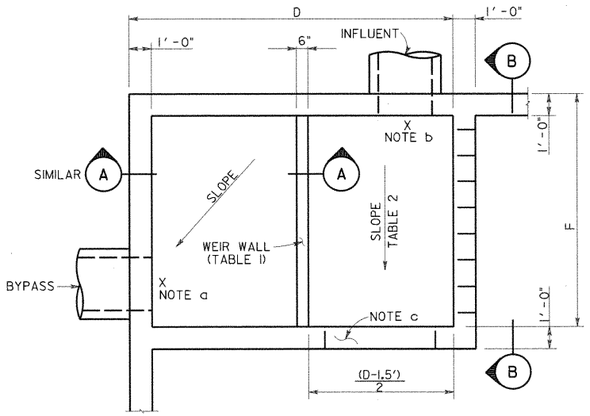

SEE TABLE SHEET I OF II
FOR DIMENSIONS D & F

SPLITTER BOX PLAN (POND 2D2)

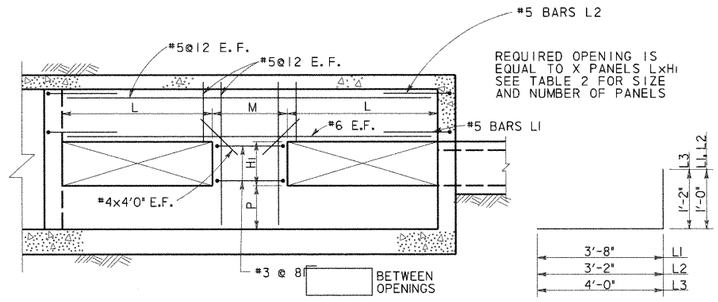

SECTION B

BARS L

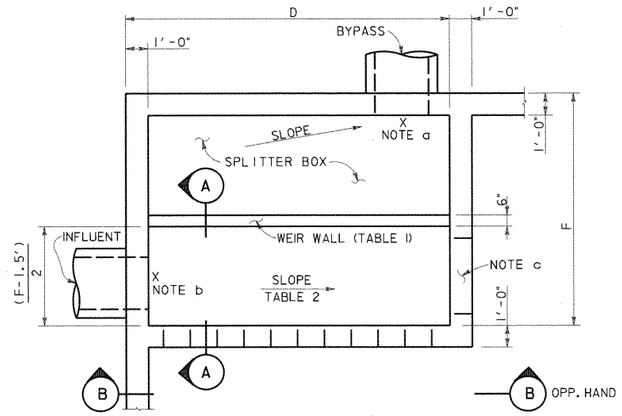

SEE TABLE SHEET I OF II
FOR DIMENSIONS D & F

SPLITTER BOX PLAN (TYPICAL)

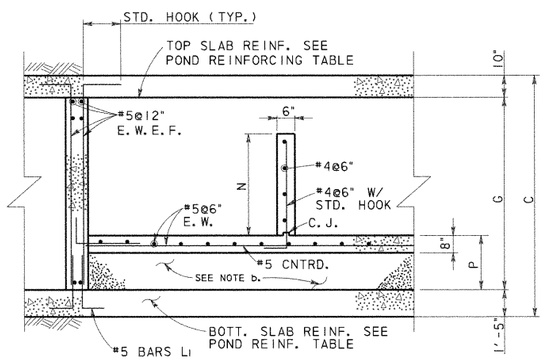

SECTION A

TABLE I BYPASS OUTFALL				
POND	BYPASS LINE ELEVATION	BYPASS WEIR		
		TOP OF WALL ELEV.	N*	P
1A	914.23	917.78	3'-6"	1'-6"
1B	918.44	921.00	2'-6"	2'-6"
1C	918.39	922.75	4'-3"	1'-9"
2A	917.38	920.92	3'-6"	1'-6"
2B	921.92	923.49	1'-6"	3'-6"
2C	923.82	925.90	2'-0"	4'-6"
2D1	920.53	923.63	3'-0"	2'-6"
2D2	916.71	921.85	5'-0"	1'-0"

*N IS MINIMUM DIMENSION, SPLITTER BOX FLOOR SLOPES, HOLD TOP OF WEIR WALL CONSTANT.

TABLE 2 INFLUENT LINE						
POND	INFLUENT ELEV.	SLOPE %	INFLUENT WALL			
			OPENINGS X	M	L	HI
1A	914.28	0.29	4	3'-0"	3'-0"	2'-6"
1B	918.50	0.48	3	2'-9"	3'-0"	1'-6"
1C	918.50	0.85	3	2'-9"	3'-0"	1'-6"
2A	917.42	0.33	3	2'-9"	3'-0"	1'-6"
2B	921.99	0.54	1	0	14'-8"	0'-9"
2C	923.90	0.62	3	2'-9"	3'-0"	1'-0"
2D1	920.63	0.53	3	6'-0"	3'-0"	2'-0"
2D2	916.85	0.78	4	3'-8"	2'-6"	2'-0"

NOTES:

a. SEE TABLE I THIS SHEET FOR OUT FLOW ELEVATION. SLOPE SLAB FROM OVERFLOW WEIR TO OUTFALL.

b. SEE TABLE 2 FOR INFLUENT ELEVATION. TOP OF SPLITTER BOX SLAB TO MATCH INFLOW ELEVATION. AT POND 2D1 THE ELEVATION SHOWN REPRESENTS A 6" DROP FROM THE INFLUENT FLOWLINE. CONTRACTOR MAY USE CEMENT STABILIZED SAND UNDER THE SLAB OR PLACE CONCRETE FOR THE FILL.

c. PROVIDE 3'x .75' OPENING AT BOTTOM OF SPLITTER BOX WALL AT END OF CHANNEL.

STATE OF TEXAS
WILLY R. BURNS
54103
REGISTERED
PROFESSIONAL ENGINEER
4/28/99

NO.	DATE	REVISION	APPROVED

Turner Collie & Braden Inc.
Engineers • Planners • Project Managers

SUTTON — Job No. 62-14004-011

© 1998 Texas Department of Transportation

US 183
WATER QUALITY PONDS
STRUCTURAL DETAILS

SCALE: AS NOTED — SHEET 3 OF 11

Designed	WRB	FED. RD. DIV. NO.	STATE	FEDERAL AID PROJECT NO.				HIGHWAY NO.
Checked		6	TEXAS	NH99(556)				US 183
Drawn	MR	STATE DIST. NO.	COUNTY	CONTROL NO.	SECTION NO.	JOB NO.		SHEET NO.
Checked		14	WILLIAMSON	151	5	072		261c

UGPDT3.DGN

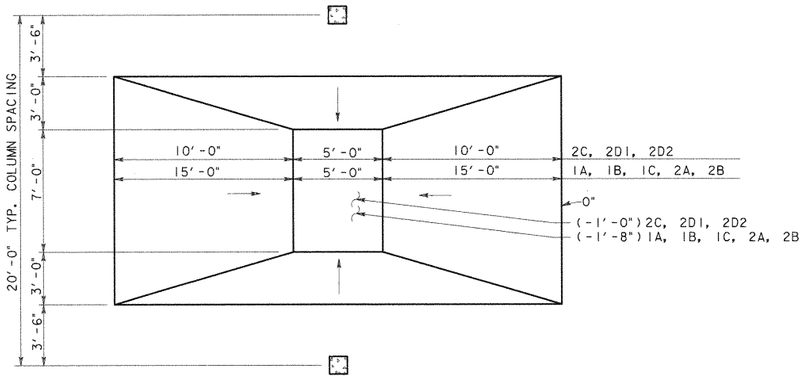

PLAN

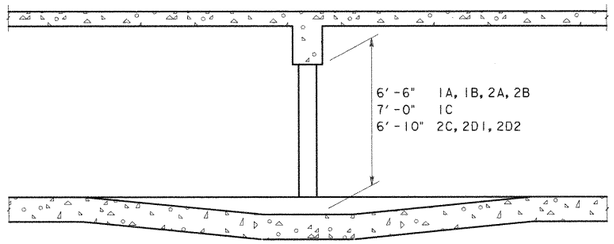

SECTION

REINFORCING LAP SPLICE & EMBEDMENT SCHEDULE						
BAR SIZE	MIN LAP LENGTH		MIN EMBEDMENT LENGTH			
	TOP BARS	OTHER BARS	TOP BARS		OTHER BARS	
			STR.	STD. HOOK	STR.	STD. HOOK
4	24"	20"	17"	9"	12"	7"
5	30"	24"	21"	10"	15"	8"
6	36"	28"	25"	10"	18"	8"
8	58"	41"	42"	15"	30"	12"

PROVIDE ONE CROSS OVER DETAIL FOR E ≤ 80'
PROVIDE TWO CROSS OVER DETAILS FOR E > 80'

CROSS OVER DETAIL
SCALE: 1/4" = 1'-0"

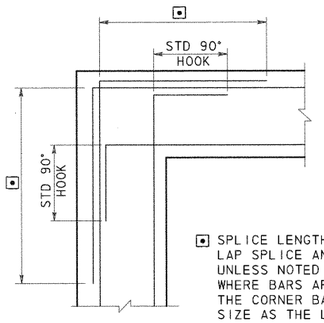

⊡ SPLICE LENGTH SEE REINFORCING LAP SPLICE AND EMBEDMENT TABLES. UNLESS NOTED OTHERWISE ON DWGS WHERE BARS ARE DIFFERENT SIZE THE CORNER BAR SHALL BE SAME SIZE AS THE LARGER BAR

CORNER REINFORCING
FOR WALLS OR GRADE BEAMS

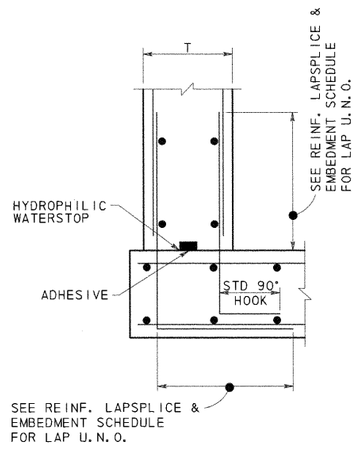

CONSTRUCTION JOINT
BASE OF WALLS

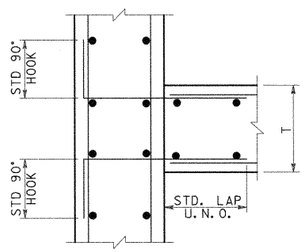

CONSTRUCTION JOINT
WALL INTERSECTIONS

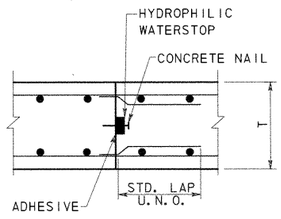

CONSTRUCTION JOINT
SLABS

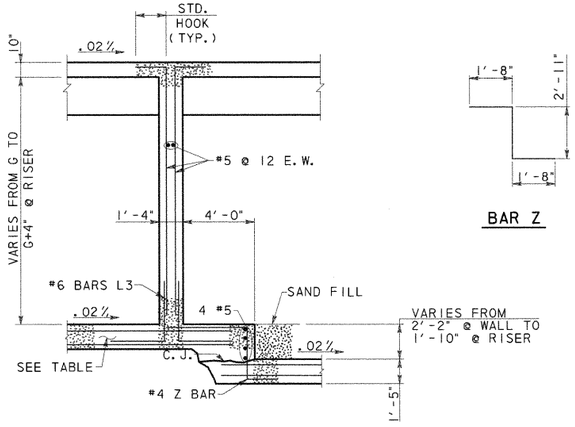

SECTION B

BAR Z

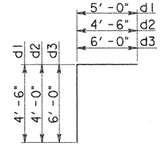

BARS D

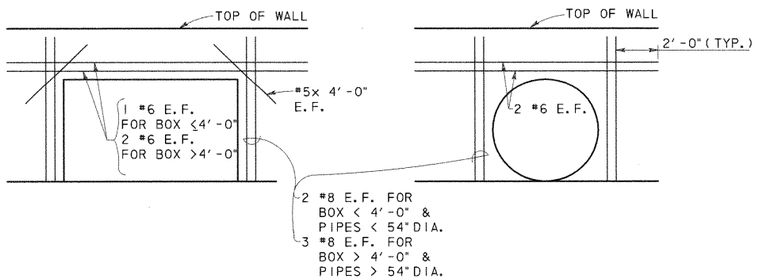

ADDITIONAL REINFORCING @ OPENINGS



NO.	DATE	REVISION	APPROVED

Turner Collie & Braden Inc.
Engineers • Planners • Project Managers

DATE: SUTTON | JOB NO. 62-14004-011 | APPROVED

© 1998 Texas Department of Transportation

US 183
WATER QUALITY PONDS
STRUCTURAL DETAILS

SCALE: AS NOTED | SHEET 4 OF 11

DESIGNED	CHECKED	DRAWN	CHECKED	FED. RD. DIV. NO.	STATE DIST. NO.	STATE	COUNTY	FEDERAL AID PROJECT NO. CONTROL NO.	SECTION NO.	JOB NO.	SHEET NO.	HIGHWAY NO.
WRB		MR		6	14	TEXAS	WILLIAMSON	NH99(556) 151	5	072	261d	US 183

UGPDT4.DGN

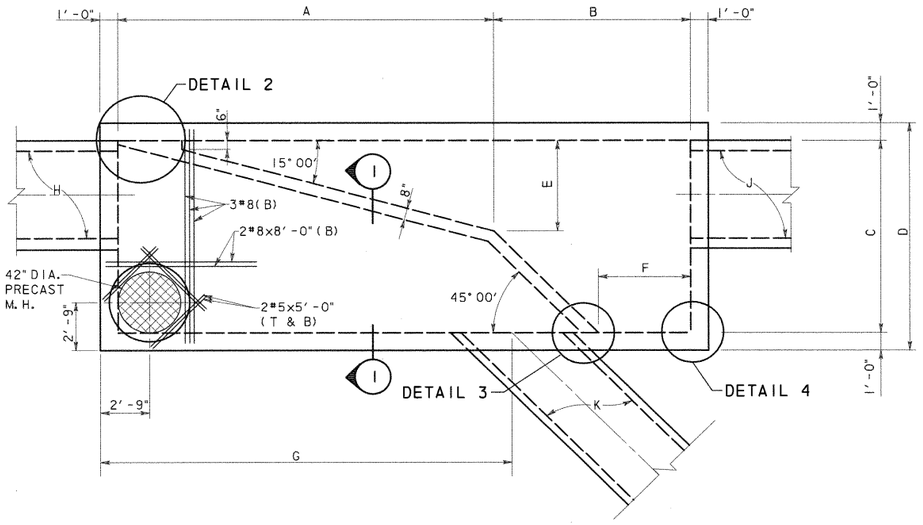

SPLITTER BOX DIMENSION TABLE

BOX LOCATION	A	B	C	D	E	F	G	H	J	K
POND SPRINGS	21'-0"	11'-0"	11'-0"	13'-0"	5'-2"	5'-2"	22'-0"	6x5 RCB	6x5 RCB	4x4 RCB
620 LEFT SIDE	13'-9"	8'-9"	8'-0"	10'-0"	3'-2"	4'-1"	13'-7"	*48" RCP	4x4 RCB	48" RCP

*48" RCP @ 15° SKEW
SEE DRAINAGE DETAIL SHEET.

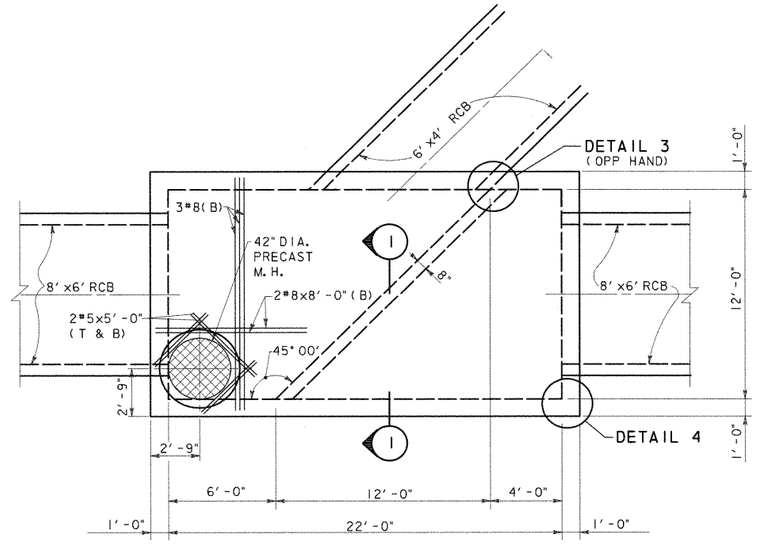

620 RIGHT SIDE
PLAN VIEW
SCALE: 1/4" = 1'-0"

ESTIMATED QUANTITIES			
BOX	CONCRETE (YD^3) *	REINFORCING (LBS) *	STRUCTURAL EXCAVATION (YD)
POND SPRINGS	56.8	7,964	
620 LEFT	32.5	4,096	
620 RIGHT	48.8	5,877	

* QUANTITIES FOR CONTRACTOR'S ESTIMATE ONLY. ALL ITEMS ARE SUBSIDIARY TO THE SPLITTER BOX.

PLAN VIEW
SCALE: 1/4" = 1'-0"

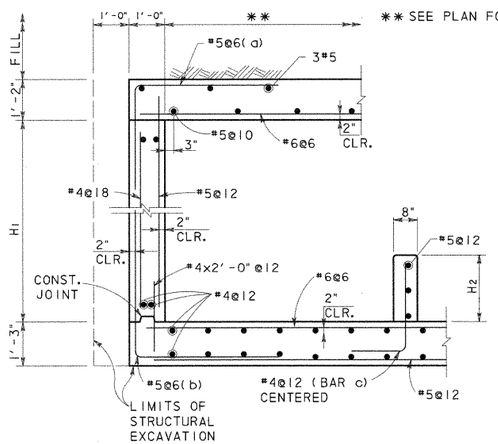

SECTION 1
SCALE: 1/2" = 1'-0"

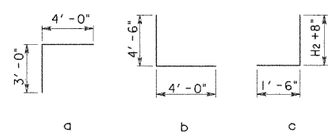

BOX LOCATION	H1	H2
POND SPRINGS	5'-6"	3'-0 1/2"
620 LEFT SIDE	4'-6"	2'-6"
620 RIGHT SIDE	6'-8"	1'-3"

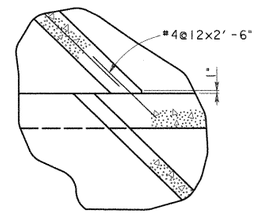

DETAIL 3
SCALE: 1/2" = 1'-0"

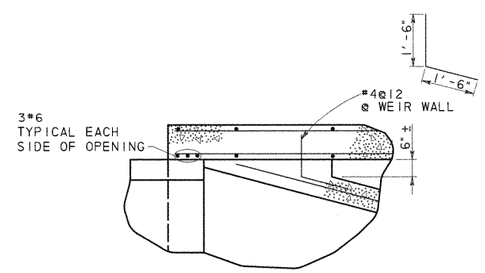

DETAIL 2
SCALE: 1/2" = 1'-0"

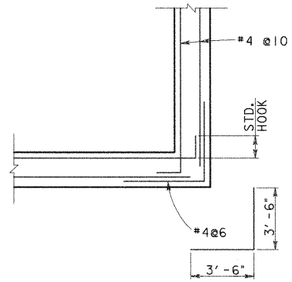

DETAIL 4
SCALE: 1/2" = 1'-0"

GENERAL NOTES:

1. DESIGNED ACCORDING TO CURRENT AASHTO 1996 STANDARD SPECIFICATIONS.
2. DESIGNED FOR HS20 LOADING AND TO THE MAXIMUM FILL HEIGHT SHOWN.
3. ALL REINFORCING SHALL BE GRADE 60 KSI.
4. ALL CONCRETE SHALL BE CLASS "C".
5. ALL DIMENSIONS ARE IN FEET AND INCHES AND ALL MASS IS IN POUNDS UNLESS OTHERWISE NOTED.



NO.	DATE	REVISION	APPROVED

Turner Collie & Braden Inc.
Engineers • Planners • Project Managers

DATE: SUTTON | JOB NO. 62-14004-011 | APPROVED

© 1998 Texas Department of Transportation

US 183
WATER QUALITY PONDS
STRUCTURAL DETAILS

SCALE: AS NOTED | SHEET 6 OF 11

Designed	WRB	FED. RD. DIV. NO.	STATE	FEDERAL AID PROJECT NO.				HIGHWAY NO.
Checked		6	TEXAS	NH99(556)				US 183
Drawn	MR	STATE DIST. NO.	COUNTY	CONTROL NO.	SECTION NO.	JOB NO.		SHEET NO.
Checked		14	WILLIAMSON	151	5	072		261f

UGPDT6.DGN

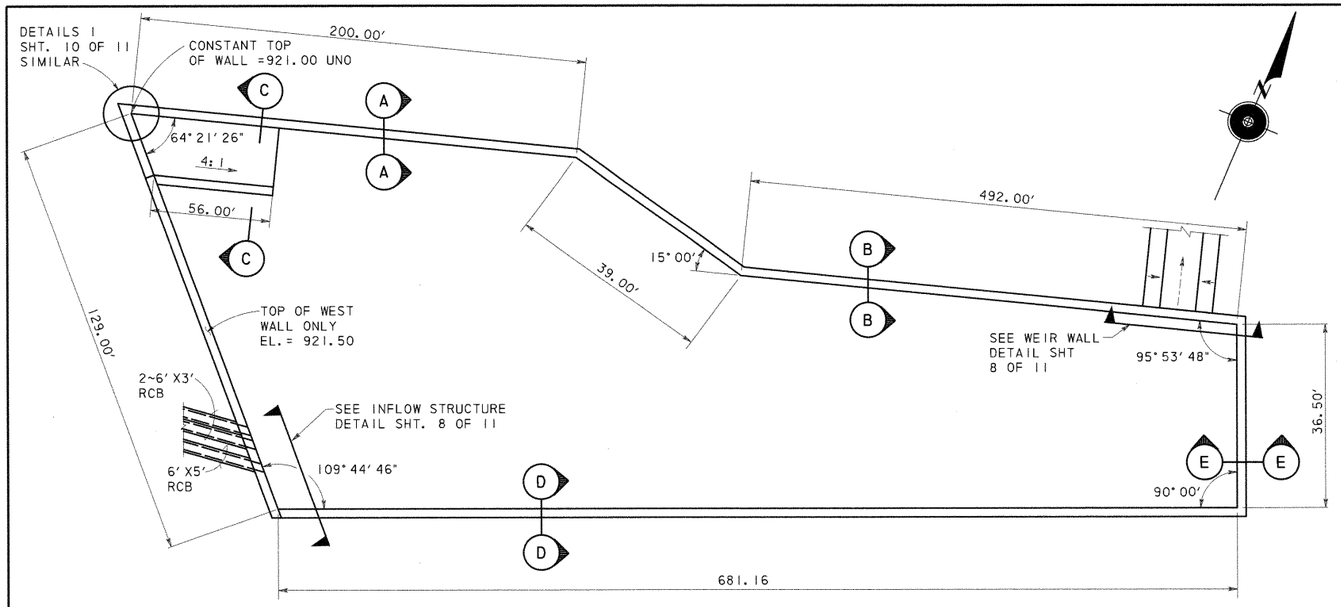

SYSTEM 3 DETENTION POND PLAN

ESTIMATED QUANTITIES (SECTION A)		
CONCRETE (YD^3) *	REINFORCING (LBS) *	** SQ. FT.
2,626	771,900	24,431

* QUANTITIES FOR CONTRACTOR'S ESTIMATE ONLY.

** EXPOSED FACE

*** WALL REINFORCING FOR 32' PANEL (SECT. A)									
A1 ~ 26 #5 @ 15" c-c		A2 ~ 25 #6 @ 15" c-c		A3 ~ 25 #7 @ 15" c-c		A4 ~ 26 #9 @ 15" c-c		A5 ~ 25 #9 @ 15" c-c	
Lgth	lb	Lgth	lb	Lgth	lb	Lgth	lb	Lgth	lb
129	292	145	455	218	928	188	1384	118	837

*** ONE SIDE SHOWN, BARS A BOTH SIDES

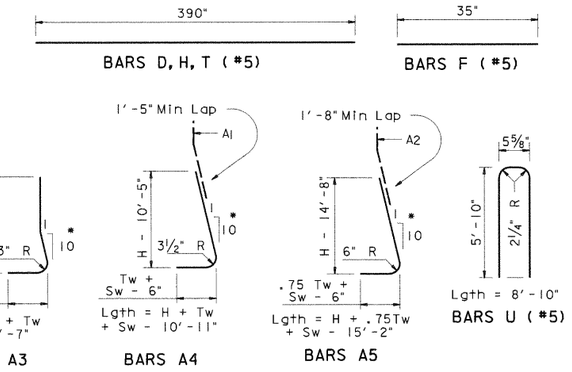

* A BARS ARE STRAIGHT IN FRONT FACE.

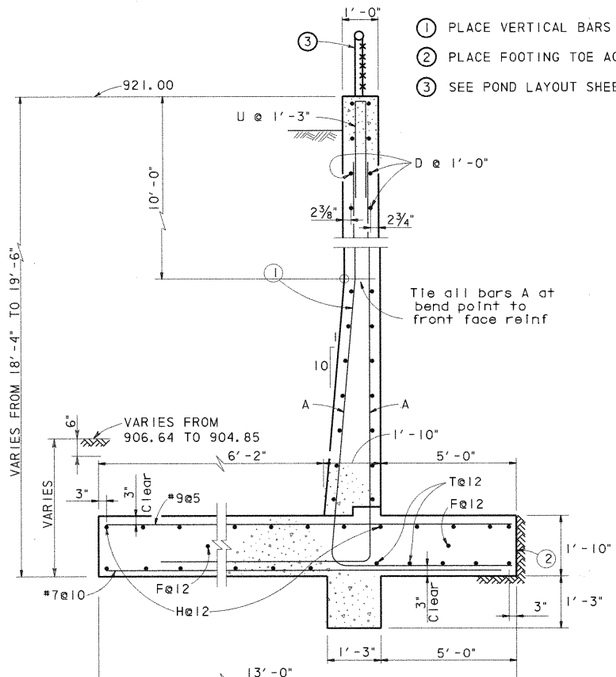

SECTION A-A
SCALE: ½" = 1'-0"

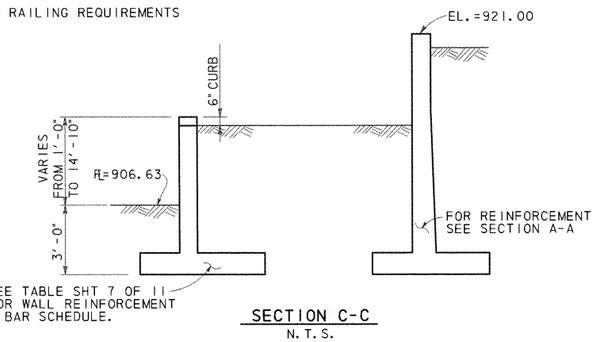

SECTION C-C
N.T.S.

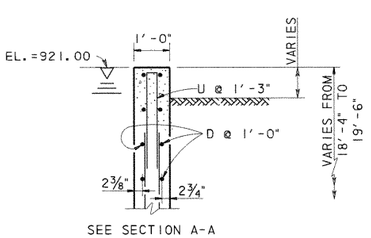

SEE SECTION A-A FOR REST OF DETAIL

SECTION D-D
SCALE: ½" = 1'-0"

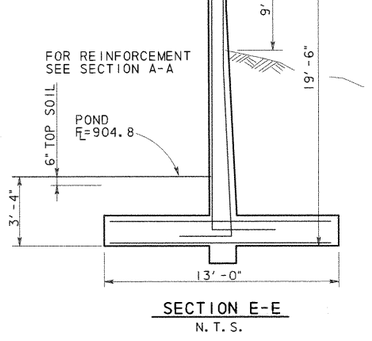

SECTION E-E
N.T.S.

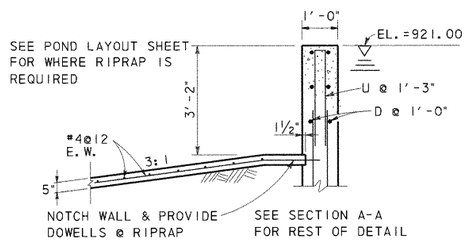

SECTION B-B
SCALE: ½" = 1'-0"

ELEVATION

GENERAL NOTES:

1. DESIGNED ACCORDING TO CURRENT AASHTO 1996 STANDARD SPECIFICATIONS.
2. DESIGNED FOR HS20 LOADING AND EQUIVALENT SOIL PRESSURE OF 60 PCF.
3. ALL REINFORCING SHALL BE GRADE 60 KSI.
4. ALL CONCRETE SHALL BE CLASS "A".
5. REINFORCING BARS SHALL BE ADJUSTED TO PROVIDE A MINIMUM OF 1½" CLEAR COVER.
6. ALL DIMENSIONS ARE IN FEET AND INCHES AND ALL MASS IS IN POUNDS UNLESS OTHERWISE NOTED.
7. CONSTRUCTION JOINT SHALL BE AT 32 FT. MAX. OC. PROVIDE CONSTRUCTION AT 15' MAX FROM EACH CORNER. CORNER CLOSURES SHALL BE PLACED LAST.
8. PROVIDE AN EXPANSION JOINT AFTER MAXIMUM OF 3 PANELS.
9. SEE SHEET 11 OF 11 FOR CONSTRUCTION AND EXPANSION JOINT DETAILS.

STATE OF TEXAS
WALLY R. BURNS
44162
REGISTERED PROFESSIONAL ENGINEER
4/28/99

NO.	DATE	REVISION	APPROVED

Turner Collie & Braden Inc.
Engineers • Planners • Project Managers

SUTTON | Job No. 62-14004-011 | Approved

© 1998 Texas Department of Transportation

US 183
WATER QUALITY PONDS
STRUCTURAL DETAILS

SCALE: AS NOTED | SHEET 7 OF 11

Designed	Checked	Drawn	Checked	FED. RD. DIV. NO.	STATE DIST. NO.	STATE	COUNTY	CONTROL NO.	SECTION NO.	JOB NO.	HIGHWAY NO. / SHEET NO.
WRB		MR		6	14	TEXAS	WILLIAMSON	151	5	072	US 183 / 261g

FEDERAL AID PROJECT NO. NH99(556)

UGPDT7.DGN

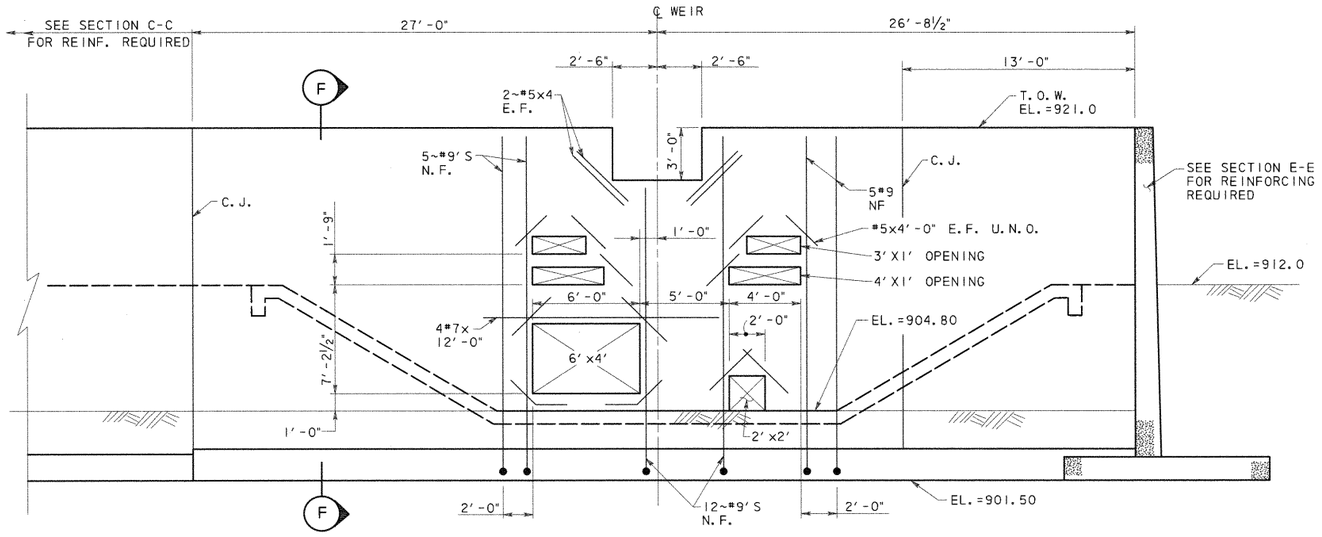

ADDITIONAL REINFORCING SHOWN, SEE SECTION F FOR TYPICAL REINF.

WEIR WALL DETAIL

SCALE: ¼" = 1'-0"

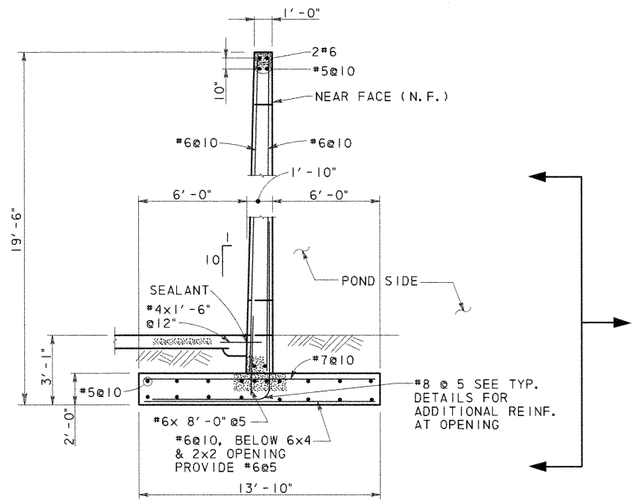

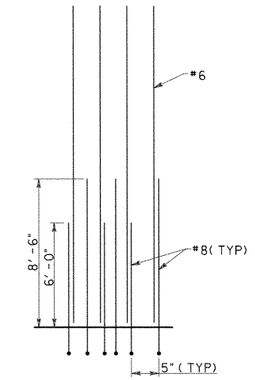

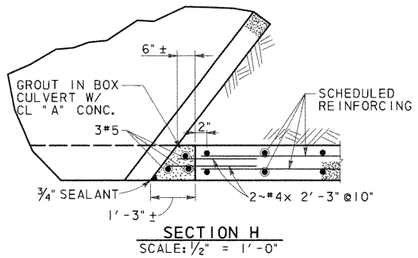

SECTION H

SCALE: ½" = 1'-0"

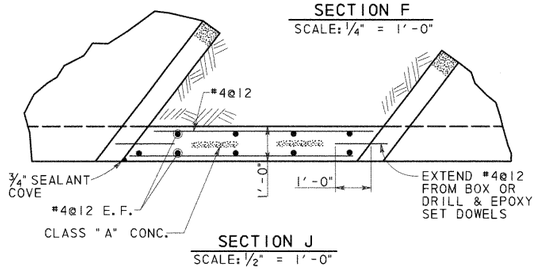

SECTION J

SCALE: ½" = 1'-0"

SECTION F

SCALE: ¼" = 1'-0"

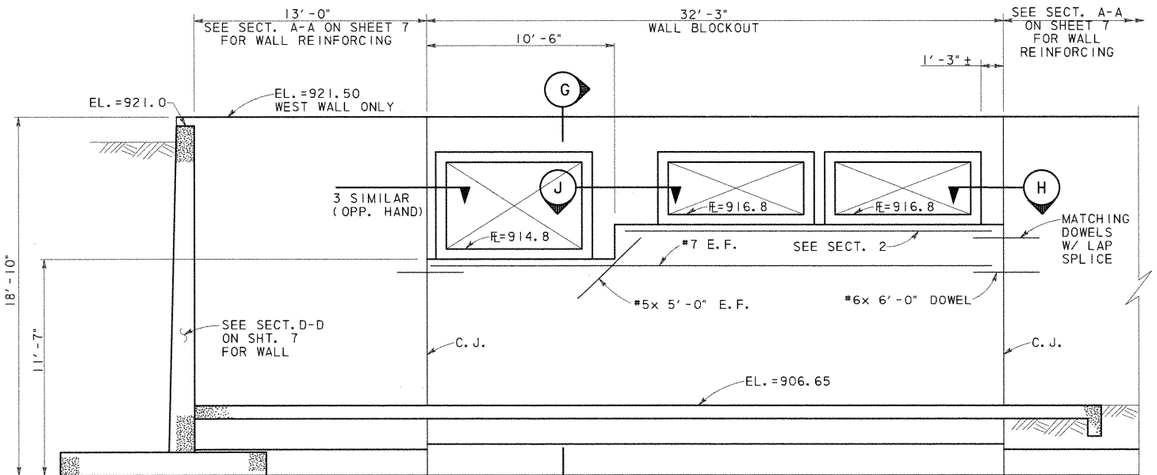

INFLOW STRUCTURE DETAIL

SCALE: ¼" = 1'-0"

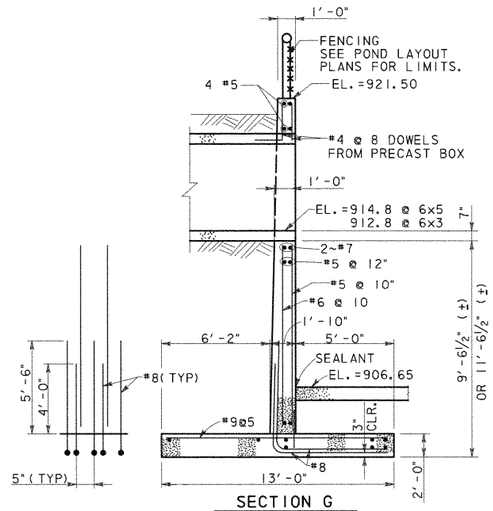

SECTION G

SCALE: ¼" = 1'-0"

STATE OF TEXAS · WALLY R. BURNS · 64262 · REGISTERED PROFESSIONAL ENGINEER

Wally R. Burns 4/28/99

NO.	DATE	REVISION	APPROVED

Turner Collie & Braden Inc.

Engineers • Planners • Project Managers

SUTTON | Job No. 62-14004-011 | Approved

© 1998 Texas Department of Transportation

US 183

WATER QUALITY PONDS STRUCTURAL DETAILS

SCALE: AS NOTED — SHEET 8 OF 11

Designed WRB	Fed. Rd. Div. No. 6	State TEXAS	Federal Aid Project No. NH99(556)	Highway No. US 183
Checked				
Drawn MR	State Dist. No. 14	County WILLIAMSON	Control No. 151	Section No. 5
Checked				Job No. 072

Sheet No. 261h

UGPDT8.DGN

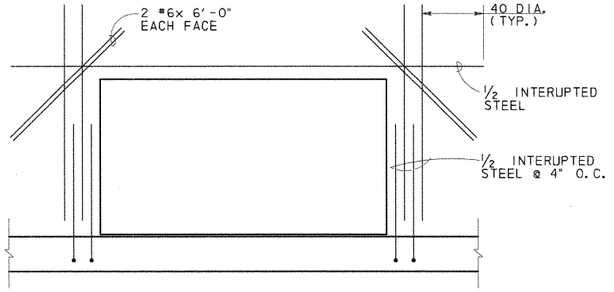

CULVERT OPENINGS

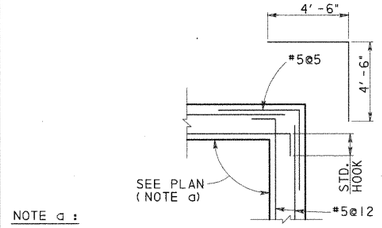

NOTE a :

SEE 620 MEDIAN POND (SHT. 5 OF 11), SYSTEM 3 POND (SHT. 7 OF 11)

DETAIL 1
SCALE: 1/2" = 1'-0"

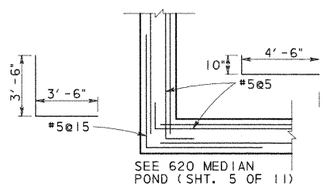

DETAIL 2
SCALE: 1/2" = 1'-0"

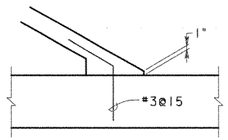

DETAIL 3
SCALE: 3/4" = 1'-0"

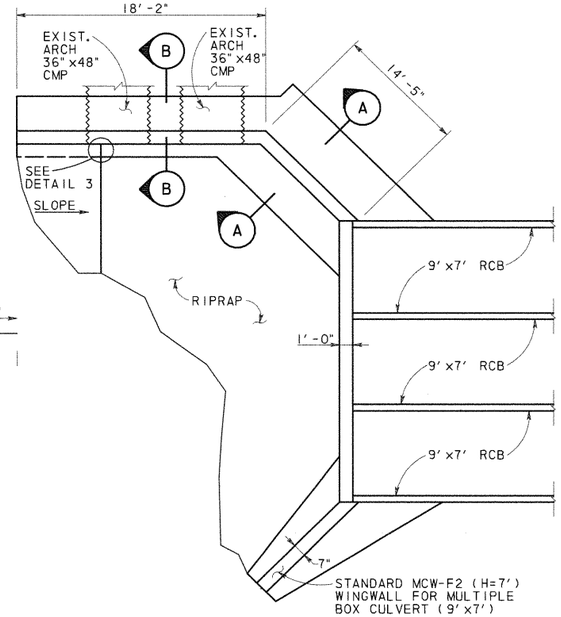

CULVERT @ POND SPRINGS PLAN
N. T. S.

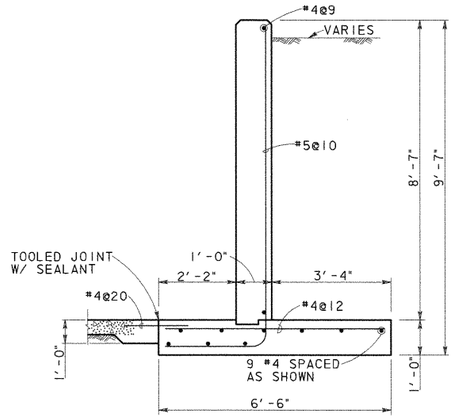

SECTION A-A
SCALE: 1/2" = 1'-0"

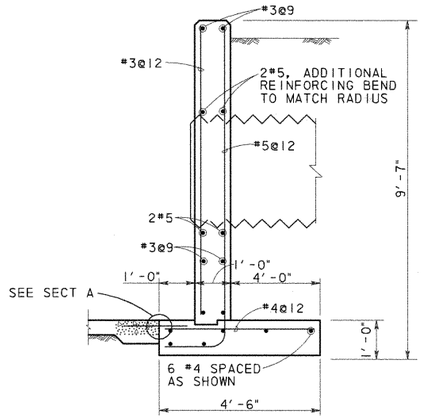

SECTION B-B
SCALE: 1/2" = 1'-0"

POND SPRINGS HEADWALL ESTIMATE QUANTITIES	
CONCRETE (YD^3) *	REINFORCING (LB) *
20.8	672

* QUANTITIES FOR CONTRACTOR'S INFORMATION ONLY. QUANTITIES SHOWN DO NOT INCLUDE THE .5 MCW-F2 WINGWALL OR THE CULVERT CURB.

THE HEADWALL SHALL BE PAID FOR AS MCW-F2(SPL).

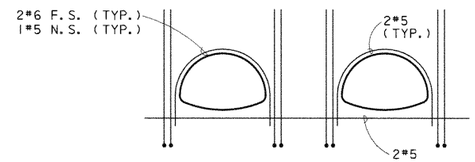

ADDITIONAL REINFORCMENT SHOWN. SEE SECTION B FOR TYPICAL

ELEVATION @ ARCH PIPE
N. T. S.

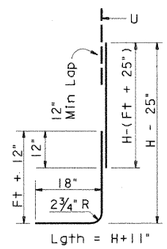

BARS B

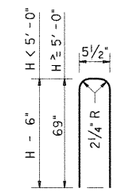

BARS U

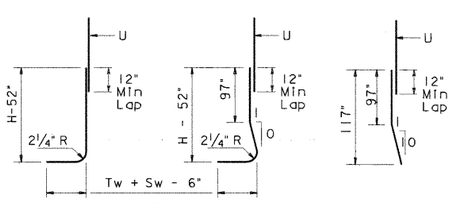

BARS A1

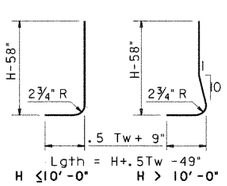

BARS A2

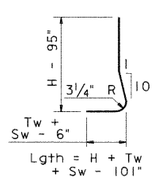

BARS A3

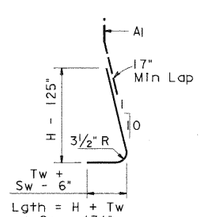

BARS A4

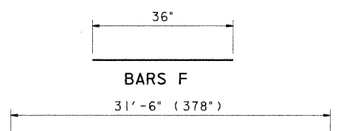

BARS D, H, T

BAR DETAILS POND SPRING

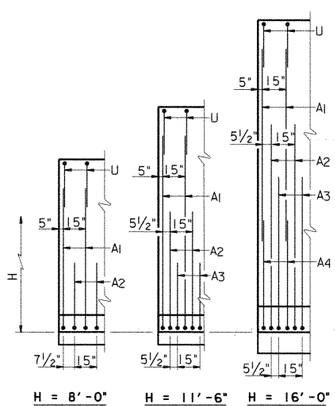

PARTIAL WALL ELEVATIONS
(Showing vertical reinforcing pattern in back face)

STATE OF TEXAS
WILLY R. BURNS
44162
REGISTERED
PROFESSIONAL ENGINEER
6/8/98

NO.	DATE	REVISION	APPROVED

Turner Collie & Braden Inc.
Engineers • Planners • Project Managers

TRANSPORTATION | Job No. 81-07401-024 | Approved

© 1998 Texas Department of Transportation

US 183
MISCELLANEOUS
WATER QUALITY PONDS
STRUCTURAL DETAILS

SCALE: AS NOTED | SHEET 10 OF 11

Designed	WRB	FED. RD. DIV. NO.	STATE	FEDERAL AID PROJECT NO.				HIGHWAY NO.
Checked		6	TEXAS	NH99(556)				US 183
Drawn	MR	STATE DIST. NO.	COUNTY	CONTROL NO.	SECTION NO.	JOB NO.		SHEET NO.
Checked		14	WILLIAMSON	151	5	072		261J

UGPDT10.DGN

AF 41904A

Ultimate Drainage Areas North of R.M. 620 Were Used In Storm Sewer And Water Quality Pond Design

R.M. 620

PECAN PARK

LAKE CREEK PARKWAY

HYMEADOW

Q50 = 447.4 cfs
Outfall 1

Pond 1A

Pond 1B

Pond 1C

Outfall 2
Q100 = 412 cfs
Q50 = 385 cfs

Pond 2A

Pond 2B

Pond 2C

Pond 2D1

Pond 2D2

R.M. 620 Median Pond

Q50 = 800 cfs

Q50 = 89.2 cfs

To Drainage Structures (By Others)

MELLOW MEADOWS DRIVE

LAKESTOP BLVD.

Interim Drainage Areas

US 183

R.M. 620

ANDERSON MILL ROAD

CONTRIBUTING AREA TO LAKE CREEK CHANNEL

A_{TOTAL} = 1133 ACRES
Q_{50} = 4100 cfs *
Q_{100} = 4400 cfs *

* THESE FLOWS ARE BASED ON REGIONAL ANALYSIS OF THE ENTIRE CONTRIBUTING AREA AND DO NOT EQUATE TO THE ACCUMULATED THYSYS FLOWS.

Q50 = 200 cfs

NO.	DATE	REVISION	APPROV.
4			
3			
2			
1			

Turner Collie & Braden Inc.
CONSULTING ENGINEERS
TEXAS AUSTIN/DALLAS/HOUSTON/PORT ARTHUR
COLORADO DENVER

Unit: AUSTIN | Job No. 72-07401-022 | Approved

STATE DEPARTMENT OF HIGHWAYS AND PUBLIC TRANSPORTATION

©1998 TxDOT

DRAINAGE AREA MAP

SCALE: 1" = 200'

Designed DAN	FED. NO. DIV. NO.	STATE	FEDERAL AID PROJECT NO.			HIGHWAY NO.
Checked	6	TEXAS	NH 99(556)			U.S. 183
Drawn WWS	STATE DIST. NO.	COUNTY	CONTROL NO.	SECTION NO.	JOB NO.	SHEET NO.
Checked DAN	14	WILLIAMSON	151	05	072	262a

STATE OF TEXAS
Robert W. Barnett
49537
REGISTERED PROFESSIONAL ENGINEER

Robert W. Barnett
5-09-88

A.F. 61904A

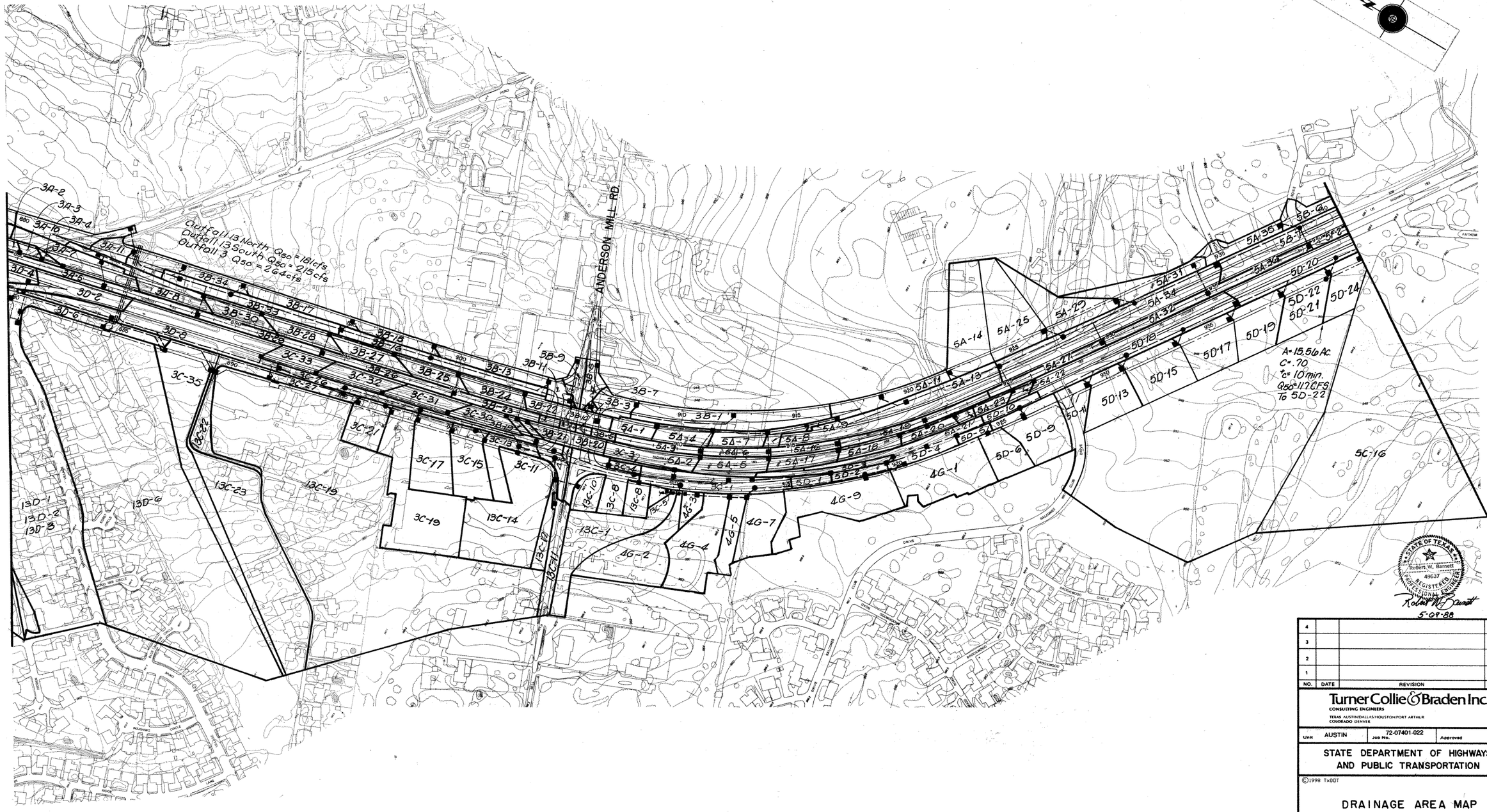

NO.	DATE	REVISION	APPROV.
4			
3			
2			
1			

Turner Collie & Braden Inc.
CONSULTING ENGINEERS
TEXAS AUSTIN/DALLAS/HOUSTON/PORT ARTHUR
COLORADO DENVER

Unit AUSTIN | Job No. 72-07401-022 | Approved

STATE DEPARTMENT OF HIGHWAYS AND PUBLIC TRANSPORTATION

©1998 TxDOT

DRAINAGE AREA MAP

SCALE: 1"=200'

Designed DAN	FED. RD. DIV. NO.	STATE	FEDERAL AID PROJECT NO.			HIGHWAY NO.
Checked	6	TEXAS	NH 99(556)			U.S. 183
Drawn WWS	STATE DIST. NO.	COUNTY	CONTROL NO.	SECTION NO.	JOB NO.	SHEET NO.
Checked DAN	14	WILLIAMSON	151	05	072	202b

A.F. 41804A

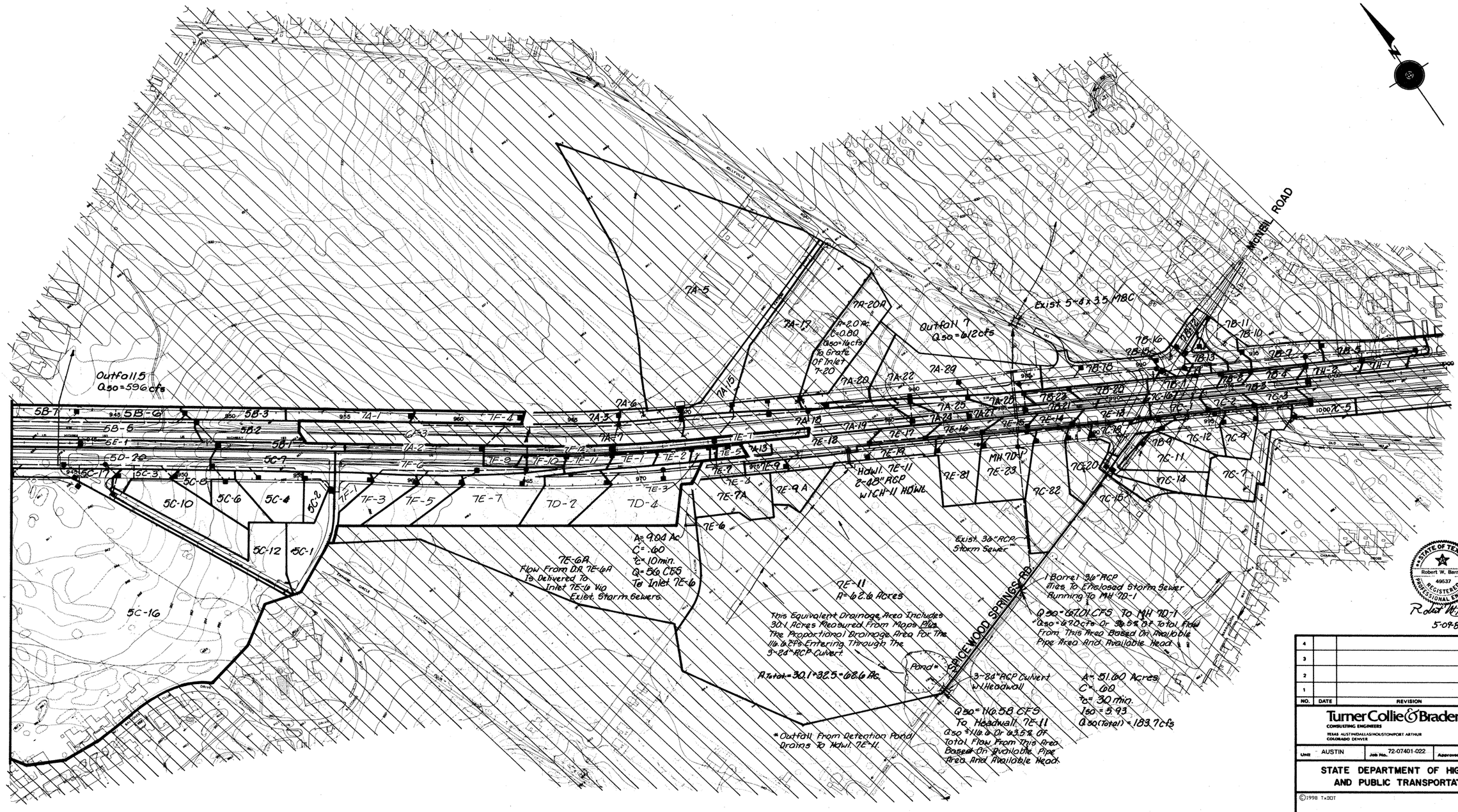
MICHEL ROAD
Outfall 5
Q50=596cfs
Outfall 7
Q50=612cfs
Exist 5-8'x3.5' MBC
7A-5
7A-17
7A-20A
A=2.0 Ac.
C=0.80
Q50=14cfs
To Grate Of Inlet 7-20
7A-15
7A-6
7A-3
7A-7
7A-18
7A-19
7A-20
7A-22
7A-29
7A-25
7A-24
7A-27
7A-26
7A-1
7A-2
7A-13
7F-4
7F-12
7F-11
7F-10
7F-9
7F-8
7F-6
7F-5
7F-3
7F-2
7F-1
7E-1
7E-2
7E-5
7E-7
7E-8
7E-9
7E-9A
7E-9A
7E-6
7E-3
7E-4
7E-7A
7E-10
7E-12
7E-13
7E-14
7E-15
7E-16
7E-17
7E-18
7E-19
7E-11
7E-81
7E-82
7E-23
MH 7D-1
7D-2
7D-4
HDWL 7E-11
2-48" RCP
W/CH-11 HDWL
5B-7
5B-6
5B-5
5B-3
5B-2
5B-1
5E-1
5D-20
5C-17
5C-7
5C-3
5C-8
5C-10
5C-6
5C-4
5C-2
5C-12
5C-1
5C-16
7B-11
7B-10
7B-16
7B-15
7B-13
7B-12
7B-14
7B-18
7B-17
7B-1
7B-2
7B-3
7B-4
7B-5
7B-6
7B-7
7B-8
7B-9
7B-21
7B-22
7B-23
7C-16
7C-1
7C-2
7C-3
1000 7C-5
7C-18
7C-19
7C-20
7C-12
7C-4
7C-11
7C-14
7C-7
7C-82
7C-15
7D-9
7D-11
7D-12
7D-13
7D-14
7D-15
7D-16
7D-17
7D-18
7D-19
7D-20
7D-21
7D-22
7D-23
7D-24
7D-25
7D-26
7D-27
7D-28
7D-29
7D-30
7D-31
7D-32
7D-33
7D-34
7D-35
7D-36
7D-37
7D-38
7D-39
7D-40
7D-41
7D-42
7D-43
7D-44
7D-45
7D-46
7D-47
7D-48
7D-49
7D-50

```
$ FILE 1-PND100.DAT (t:*183sec1*thysys*sys5)
$
$
$ THYSYS FOR SYSTEM 5 DRAINAGE, WETPOND OUTFALLS AT PONDSPRINGS ROAD
$ 100 YR FREQUENCY
$
$
SEWER                ANALYSIS  RUNOFF    INLET     SEWER     FREQUENCY=100YR
COEF DESC A=PVMT     B=COMM    C=RES     D=RES     E=GRASS
RAT COEF   .90  .80  .70  .60  .40      MIN TC =   10.0WILLIAMSON
$
$
DA W 01                  54.8                      T 24
DA W 04                  4.60                      T 22
DA W 06                  4.59                      T 22
$
OUTLET    STATIONING     0.00 T.W. ELEV   919.00   W 11
JUNC W 01 TYPE=OTHER
JUNC W 02 TYPE=JUNCT
JUNC W 03 TYPE=JUNCT
JUNC W 04 TYPE=GSAG                                    12.0      8.24
JUNC W 05 TYPE=JUNCT
JUNC W 06 TYPE=GSAG                                    12.0      8.24
JUNC W 07 TYPE=JUNCT
JUNC W 08 TYPE=JUNCT
JUNC W 09 TYPE=JUNCT
JUNC W 10 TYPE=JUNCT
JUNC W 11 TYPE=JUNCT
$
$         ADDITIONAL RUNOFF                APPR GRADE  APPR FLOW
$          DA     C     Tc  CRITICAL          LT   RT  LT   RT
$          ac          min  ELEVATION         %    %   % of cfs
$
SJUN W 01                923.490
SJUN W 04                921.400
SJUN W 06                920.110
SJUN W 11                919.000
$
$
DSGN  01  W 01 W 02 US 921.82 DS 920.97   95          012          BOX
DSGN  02  W 02 W 03 US 920.97 DS 920.25   80          012          BOX
DSGN  03  W 03 W 05 US 920.25 DS 920.23    6          012          BOX
DSGN  04  W 04 W 05 US 919.90 DS 919.83   17          012          CIRC
DSGN  05  W 05 W 07 US 920.23 DS 919.74  121          012          BOX
DSGN  06  W 06 W 07 US 918.61 DS 918.54   17          012          CIRC
DSGN  07  W 07 W 08 US 919.74 DS 919.70   10          012          BOX
DSGN  08  W 08 W 09 US 919.70 DS 919.62   20          012          BOX
DSGN  09  W 09 W 10 US 919.62 DS 919.05  160          012          BOX
DSGN  10  W 10 W 11 US 919.05 DS 919.00   15          012          BOX
$
ANAL  01  W 01 W 02     1    4    7
ANAL  02  W 02 W 03     1    4    7
ANAL  03  W 03 W 05     1    4    8
ANAL  04  W 04 W 05     1   30   30
ANAL  05  W 05 W 07     1    4    8
ANAL  06  W 06 W 07     1   30   30
ANAL  07  W 07 W 08     1    4    8
ANAL  08  W 08 W 09     1    4    8
ANAL  09  W 09 W 10     1    4    8
ANAL  10  W 10 W 11     1    4    8
$
ENDATA
```

SEWER

RUNOFF CALCULATIONS

RAINFALL FREQUENCY = 100 YR.

SURFACE DESCRIPTION OF RATIONAL COEFFICIENTS

A	B	C	D	E	F
PVMT	COMM	RES	RES	GRASS	
.9000	.8000	.7000	.6000	.4000	.0000

MINIMUM TIME OF CONCENTRATION = 10.0 MINUTES

E = .751 B = 103. D = 8.0

INLET RUNOFF CALCULATIONS

I.D.	AREA	"CA"	"TC"	INTENSITY	BASEFLOW	TOTAL FLOW
W 1	54.80	32.88	24.00	7.63	.00	250.84
W 4	4.60	2.76	22.00	8.01	.00	22.10
W 6	4.59	2.75	22.00	8.01	.00	22.05

SEWER

INLET ANALYSIS

INLET I.D.	TYPE	FLOW (CFS)	INLET CAPACITY (CFS)	CARRYOVER (CFS)	CARRYOVER ASSIGNMENT INLET I.D.	CALCULATED POND WIDTH (FT)	ACTUAL LENGTH (FT)	MINIMUM COMPUTED LENGTH REQUIRED (FT)	ACTUAL AREA (SQ FT)	MINIMUM AREA REQUIRED (SQ FT)	ACTUAL HEAD (FT)
W 1	OTHER	250.84	250.84	.00	---	.00	.0	.0	.00	.00	*********
W 4	GSAG	22.10	23.15	.00	---	.00	.0	.0	8.24	7.87	.91
W 6	GSAG	22.05	23.15	.00	---	.00	.0	.0	8.24	7.85	.91

SEWER

CUMULATIVE RUNOFF CALCULATIONS FOR PIPE RUNS

RUN	U.S. I.D.	D.S. I.D.	"CA"	"TC"	AREA	CUMULATIVE "CA"	CUMULATIVE "TC"	SUPPLY Q	INTENSITY	FLOW
01	W 1	W 2	32.88	24.00	54.80	32.88	24.00	.00	7.63	250.84
02	W 2	W 3	.00	.00	.00	32.88	24.11	.00	7.61	250.22
03	W 3	W 5	.00	.00	.00	32.88	24.20	.00	7.59	249.69
04	W 4	W 5	2.76	22.00	4.60	2.76	22.00	.00	8.01	22.10
05	W 5	W 7	.00	.00	.00	35.64	24.21	.00	7.59	270.59
06	W 6	W 7	2.75	22.00	4.59	2.75	22.00	.00	8.01	22.05
07	W 7	W 8	.00	.00	.00	38.39	24.38	.00	7.56	290.29
08	W 8	W 9	.00	.00	.00	38.39	24.40	.00	7.56	290.20
09	W 9	W10	.00	.00	.00	38.39	24.43	.00	7.55	290.00
10	W10	W11	.00	.00	.00	38.39	24.72	.00	7.50	288.04

SEWER

SEWER ANALYSIS

CONFIGURATION DATA

RUN	U.S. ID	D.S. ID	U.S. F.L. ELEV	D.S. F.L. ELEV	LENGTH FEET	SLOPE	BBLS	RISE	SPAN	SHAPE
01	W 1	W 2	917.82	916.97	95	.00895	1	4	7	BOX
02	W 2	W 3	916.97	916.25	80	.00900	1	4	7	BOX
03	W 3	W 5	916.25	916.23	6	.00334	1	4	8	BOX
04	W 4	W 5	917.40	917.33	17	.00412	1	30	30	CIRC
05	W 5	W 7	916.23	915.74	121	.00405	1	4	8	BOX
06	W 6	W 7	916.11	916.04	17	.00412	1	30	30	CIRC
07	W 7	W 8	915.74	915.70	10	.00400	1	4	8	BOX
08	W 8	W 9	915.70	915.62	20	.00400	1	4	8	BOX
09	W 9	W10	915.62	915.05	160	.00356	1	4	8	BOX
10	W10	W11	915.05	915.00	15	.00333	1	4	8	BOX

STATE OF TEXAS C.D. BILLS 83977 LICENSED PROFESSIONAL ENGINEER
C.D. Bills 5-3-99

DATE: 04/10/99
JOB No.: 72-07401-022
PATH: t:\ 07401022\drainage\ 183dd194.dgn

Turner Collie & Braden Inc.
ENGINEERS • PLANNERS • PROJECT MANAGERS

AUSTIN	72-07401-022		
Unit	Job No.	File	

Texas Department of Transportation

©1998 TxDOT

US 183
DRAINAGE DATA
WOODS POND
SYSTEM 5 W - 100 YR

SCALE: AS NOTED

Designed	KKY	FED. RD. DIV. NO.	STATE	FEDERAL AID PROJECT NO.		SHEET NO.
Checked	DLG	6	TEXAS	NH 99(556)		U.S.183
Drawn	JAM	STATE DIST. NO.	COUNTY	CONTROL NO.	SECTION NO.	JOB NO.	SHEET NO.
Checked	DLG	AUS	WILLIAMSON	0151	05	072	272a

HYDRAULIC DATA

RUN	U.S. ID	D.S. ID	'N'	JUNC LOSS	FLOW	U.S. HEAD	D.S. HEAD	HYDR. GRAD	DEPTH	VELOC.	PIPE CAPAC.
BLOWOUT--TOTAL HEAD AT UPSTREAM END FOR RUN NO. 01 IS GREATER THAN 923.49											
ENTRANCE CONTROLS. TOTAL HEAD AT UPSTREAM END FOR RUN NO. 01 IS 5.79											
01	W 1	W 2	.012	.00	250.84	923.61	920.45	.00379	2.41*	9.0**	385.2
02	W 2	W 3	.012	.00	250.22	920.45	920.15	.00378	2.40*	8.9**	386.3
03	W 3	W 5	.012	.00	249.69	920.15	920.13	.00271	3.03*	7.8**	277.3
04	W 4	W 5	.012	.00	22.10	920.17	920.13	.00247	.66	4.5**	28.5
05	W 5	W 7	.012	.00	270.59	920.13	919.75	.00318	3.00*	8.5**	305.5
06	W 6	W 7	.012	.00	22.05	919.79	919.75	.00246	.66	4.5**	28.5
07	W 7	W 8	.012	.00	290.29	919.75	919.71	.00366	3.17*	9.1**	303.5
08	W 8	W 9	.012	.00	290.20	919.71	919.64	.00365	3.17*	9.1**	303.6
09	W 9	W10	.012	.00	290.00	919.64	919.05	.00365	4.00*	9.1	286.5***
10	W10	W11	.012	.00	288.04	919.05	919.00	.00360	4.00*	9.0	277.1***

0* BOX DEPTHS IN FEET

SEW0069--**PIPE FLOWING FULL DUE TO DOWNSTREAM CONTROL. NOT INSUFFICIENT CAPACITY- VELOCITY IS BASED ON FULL FLOW.
JUNCTION LOSSES MAY NEED TO BE CONSIDERED AT SUBMERGED JUNCTIONS

STATE OF TEXAS
C. D. BILLS
83877
LICENSED
PROFESSIONAL ENGINEER
5-3-99

DATE: 04/10/99
JOB No.: 72-07401-022
PATH: t:\ 07401022\drainage\ 183ddt95.dgn

Turner Collie & Braden Inc.
ENGINEERS • PLANNERS • PROJECT MANAGERS

AUSTIN (Unit) | 72-07401-022 (Job No.) | (File)

Texas Department of Transportation

©1998 TxDOT

US 183
DRAINAGE DATA
WOODS POND
SYSTEM 5 W – 100 YR

SCALE: AS NOTED

Designed	KKY	FED. RD. DIV. NO.	STATE	FEDERAL AID PROJECT NO.			SHEET NO.
Checked	DLG	6	TEXAS	NH 99(556)			U.S.183
Drawn	JAM	STATE DIST. NO.	COUNTY	CONTROL NO.	SECTION NO.	JOB NO.	SHEET NO.
Checked	DLG	AUS	WILLIAMSON	0151	05	072	272b

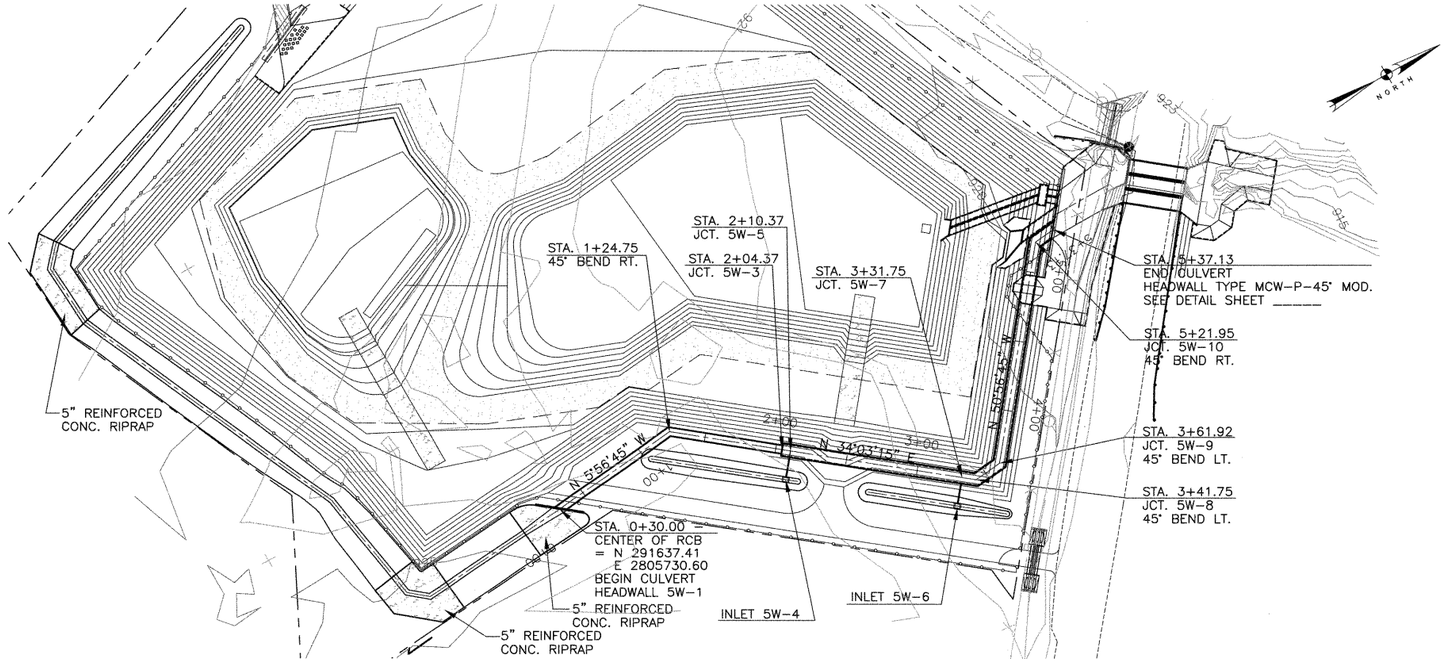

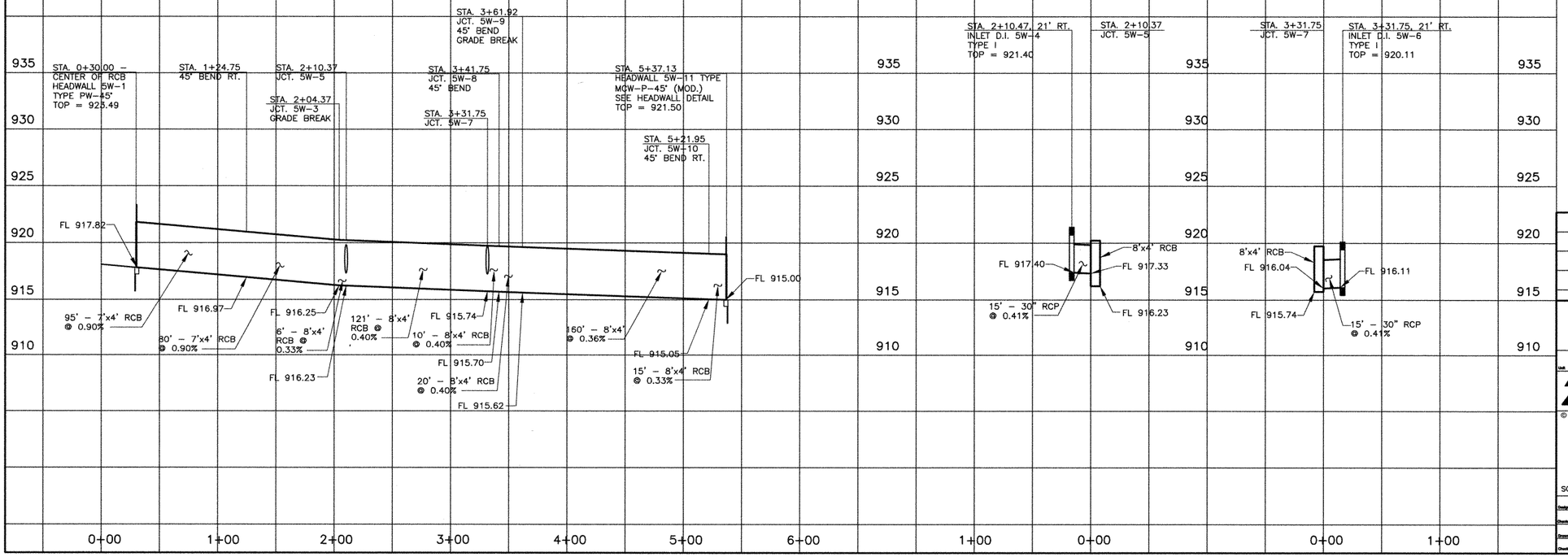

DATE: 04/29/99
JOB NO. T:/183SEC1/DRAWING/ss5-wdpp.dwg

STATE OF TEXAS
REBECCA A. BILLS
82587
REGISTERED
PROFESSIONAL ENGINEER
5-3-99

Turner Collie & Braden Inc.
ENGINEERS • PLANNERS • PROJECT MANAGERS

Unit	Job No.	File
AUSTIN	72-07401-022	

Texas Department of Transportation

© 1998 TxDOT

WOODS POND
STORM SEWER
PLAN AND PROFILE

SCALE: 1" = 50' HORIZ., 1" = 5' VERT.

Designed	KKY	FED. RD. DIV. NO.	STATE	FEDERAL AID PROJECT NO.				HIGHWAY NO.	
Checked	RAB	6	TEXAS	NH 99(556)				U.S.183	
Drawn	GWS	STATE DIST. NO.	COUNTY	CONTROL NO.	SECTION NO.	JOB NO.		SHEET NO.	
Checked	CDB	AUS	WILLIAMSON	0151	05	072		334	

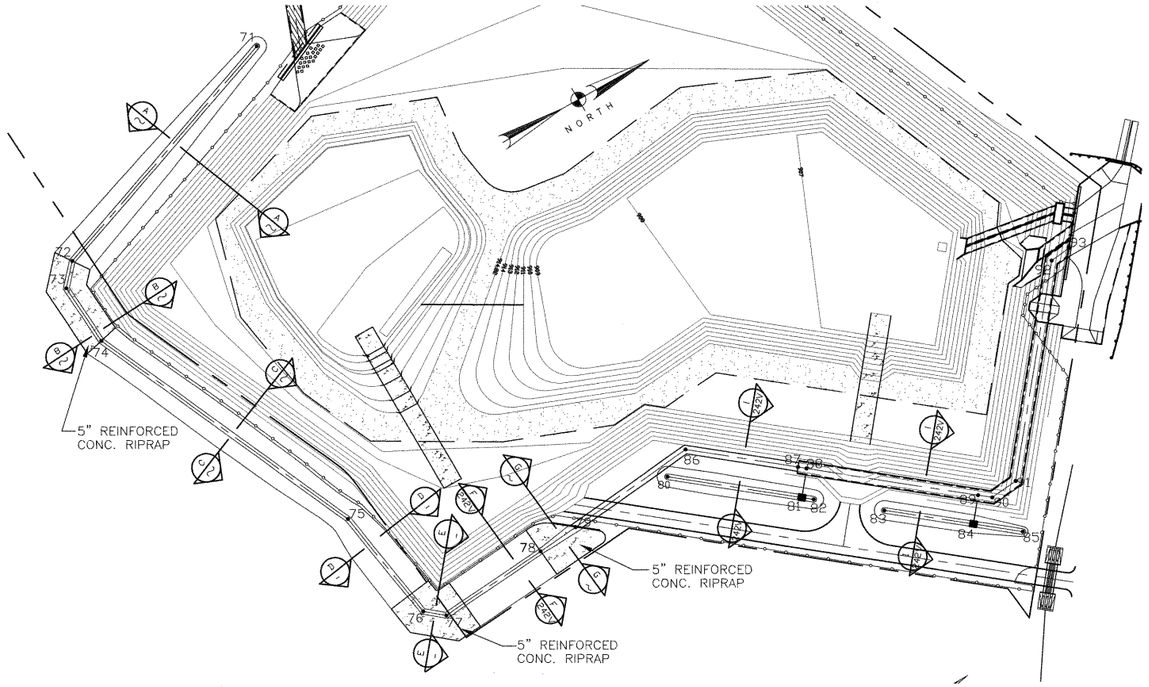

PLAN – DRAINAGE DITCH
SCALE: 1" = 50'

SECTION A
SCALE: 1/4" = 1'

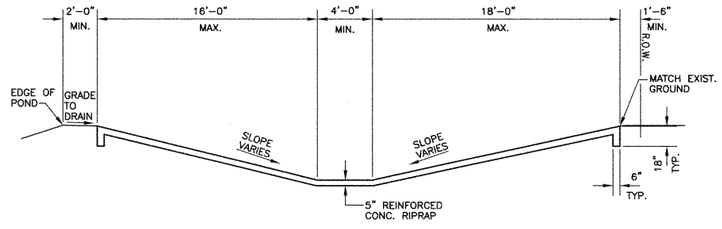

SECTION B
SCALE: 1/4" = 1'

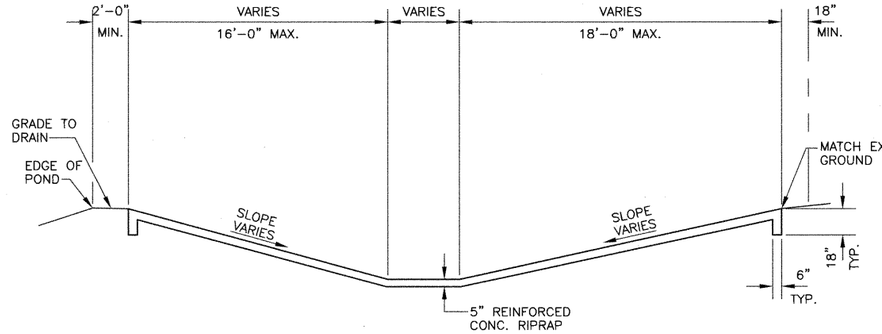

SECTION G
SCALE: 1/4" = 1'

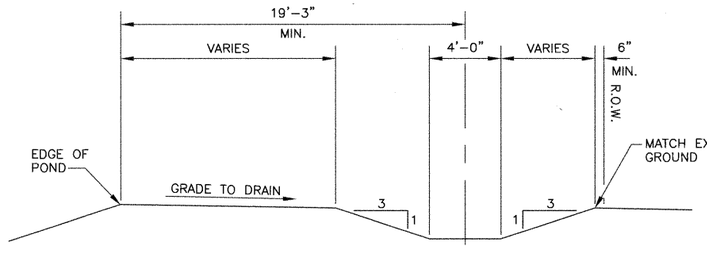

SECTION C
SCALE: 1/4" = 1'

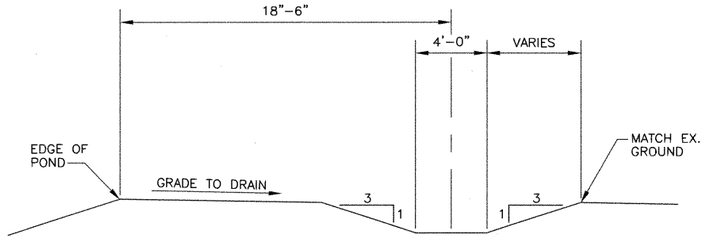

SECTION D
SCALE: 1/4" = 1'

POINT LOCATION TABLE

POINT No.	N	E	ELEV.
DITCHES			
71	291616.53	2805321.50	924.62
72	291428.42	2805389.44	923.22
73	291415.09	2805404.19	923.08
74	291417.36	2805449.13	922.76
75	291502.58	2805645.96	919.76
76	291514.94	2805729.56	919.08
77	291527.51	2805740.12	919.00
78	291607.52	2805733.19	918.60
79	291637.41	2805730.60	917.82
80	291711.13	2805731.18	922.35
81	291784.91	2805791.04	921.40
82	291791.44	2805796.34	921.48
83	291830.25	2805827.82	920.74
84	291879.17	2805867.51	920.11
85	291906.35	2805889.57	920.29
86	291731.65	2805720.79	916.97
87	291793.48	2805770.95	916.25
88	291798.14	2805774.73	916.23
89	291892.40	2805851.21	915.74
90	291900.16	2805857.51	915.70
91	291920.23	2805855.42	915.62
92	292021.05	2805731.15	915.05
93	292036.16	2805729.58	915.00

NOTE:

SEE SHT. 335b FOR TYPICAL SECTIONS OF E, F, AND I.

STATE OF TEXAS
REBECCA A. BILLS
82587
REGISTERED PROFESSIONAL ENGINEER

Rebecca A. Bills
5-3-99

Turner Collie & Braden Inc.
ENGINEERS • PLANNERS • PROJECT MANAGERS

AUSTIN | Job No. 72-07401-022 | File

Texas Department of Transportation

©1998 TxDOT

WOODS POND DITCH PLAN AND SECTIONS

Designed	Fed. Rd. Div. No.	State	Federal Aid Project No.	Highway No.
RAB	6	TEXAS	NH 99(556)	U.S.183
Checked				
KKY				
Drawn	State Dist. No.	County	Control No. / Section No. / Job No.	Sheet No.
GWS	14	WILLIAMSON	0151 / 05 / 072	335a
Checked				
CDB	AUS			

DATE: 04/29/99
JOB NO. 72183SEC1/DRAWING/ss5-wpd1.dwg

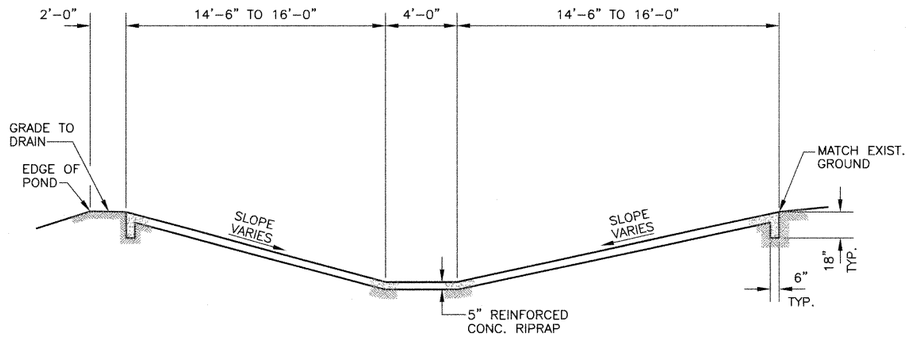

SECTION E (335a)
SCALE: 1/4" = 1'

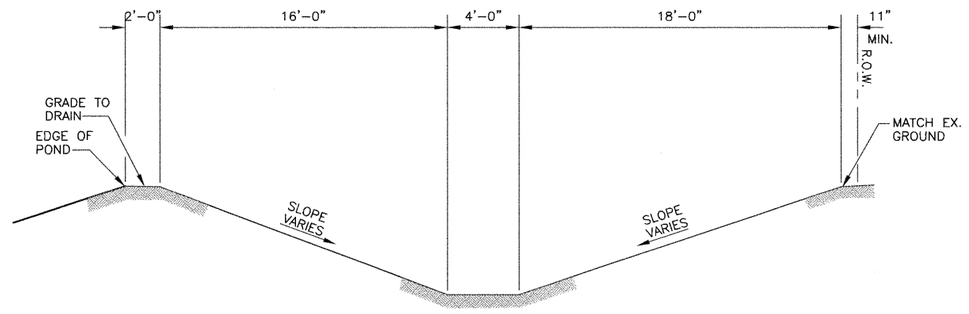

SECTION F (335a)
SCALE: 1/4" = 1'

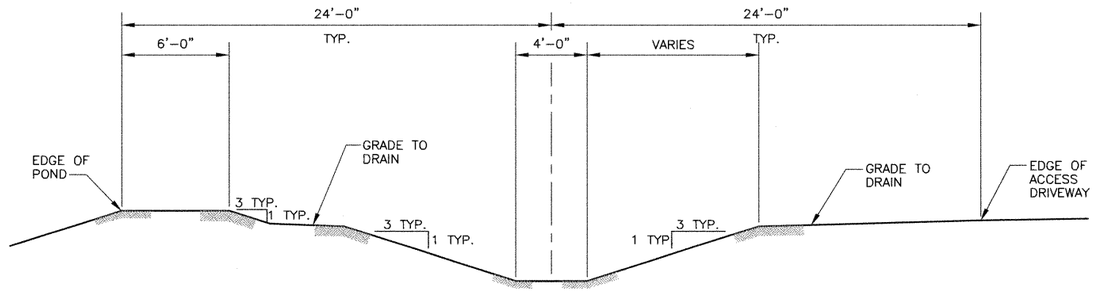

SECTION I (335a)
SCALE: 1/4" = 1'

NOTE:

SEE SHT. 335a FOR PLAN VIEW.

Turner Collie & Braden Inc.
ENGINEERS • PLANNERS • PROJECT MANAGERS

AUSTIN | 72-07401-022

Texas Department of Transportation

© 1998 TxDOT

WOODS POND DITCH DETAILS

Designed	RAB	FED. RD. DIV. NO.	STATE	FEDERAL AID PROJECT NO.				HIGHWAY NO.
Checked	KKY	6	TEXAS	NH 99(556)				U.S.183
Drawn	GWS	STATE DIST. NO.	COUNTY	CONTROL NO.	SECTION NO.	JOB NO.		SHEET NO.
Checked	CDB	AUS	WILLIAMSON	0151	05	072		335b

STATE OF TEXAS
REBECCA A. BILLS
82587
REGISTERED PROFESSIONAL ENGINEER
Rebecca A. Bills
5-3-99

DATE: 04/29/99
JOB NO: t:/183sec1/drowing/ss5-wpd2.dwg

APPENDIX K
MEETING MINUTES

Task Force:	183 North Mobility Drainage/ Utilities/ Environmental Task Force		
Date:	June 8, 2021	**Time:**	9:30 AM TO 11 AM
Location:	Austin, TX	**Room:**	TBD

Name	Company	Email	Initial
Britt Akins	Hicks & Company/GHC	bakins@hicksenv.com	
Gordon Anderson		ganderson@ai-uc.com	
Micah Ater	WSP/ CTRMA	Micah.Ater@wsp.com	MA
Michael Bauer	Walsh / GHC	mbauer@walshgroup.com	MB
Jason Buntz	Hicks	Jbuntz@hicksenv.com	JB
Taylor Burford	Atkins / CTRMA	Taylor.Burford@atkinsglobal.com	
Carlos DelaRosa			CD
William Dooley	Parsons/GHC	William.dooley@parsons.com	WD
Daniel Feeman	Atkins / CTRMA	daniel.freeman@atkinsglobal.com	
Pat Frost	Hicks & Company/GHC	pfrost@hicksenv.com	PF
Mark Frye	Parsons/GHC	Mark.frye@parsons.com	MF
Jon Geiselbrecht	TxDOT/ CTRMA	Jon.Geiselbrecht@txdot.gov	
Joseph Goessling	TxDOT/ CTRMA	Joseph.Goessling@txdot.gov	JG
Pat Gibbons	Parsons/GHC	Patrick.gibbons@parsons.com	PG
Ruth Haberman	K Friese / CTRMA	rhaberman@kfriese.com	RH
Nedra Harris	Parsons/GHC	nedra.harris@parsons.com	NH
Ryan Holloway	GHC	Rchollawy@sundt.com	RH
Derrick Horvath	Cobb Fendley	d.horvath@cobbfendly.com	DH
John Jenkins	WSP	John.jenkins@wsp.com	
Asif Khan	Parsons/GHC	Asif.khan@parsons.com	
Sandee Khoury	Cobb Fendley	Skoury@cobbfendly.com	SK
Sri Koneru	WSP/ CTRMA	Srikanth.Koneru@wsp.com	SK
Carolina Lara	K Friese	Clara@kfriese.com	

Task Force:	183 North Mobility Drainage/ Utilities/ Environmental Task Force		
Date:	June 8, 2021	**Time:**	9:30 AM TO 11 AM
Location:	Austin, TX	**Room:**	TBD

Name	Company	Email	Initial
Andrea Larrea	GHC	alarrea@walshgroup.com	
Zach Lanfear	TxDOT AUS	Zach.lanfear@txdot.gov	ZL
Rohit Lasod	Parsons/GHC	Rohit.Lasod@parsons.com	RH
Chris Leintz	GHC	cmleintz@sandt.com	
Mike Martinez	Parsons/GHC	michael.martinez@parsons.com	MM
Juan Miranda	Sundt	jrmiranda@sundt.com	JM
Tina Murphy	Parsons/GHC	Tina.murphy@parsons.com	TM
Kevin O'Connor	Parsons/GHC	Kevin.oconnor@parsons.com	KO
Vicki Ortega	K Friese	VOrtega@kfriese.com	
Pat Pluenneke	Walsh / GHC	ppluenneke@walshgroup.com	PP
Ed Rashin	Hicks & Company/GHC	erashin@hicksenv.com	ER
April Sandoval	TxDOT	April.Sandoval@txdot.gov	AS
Mike Sexton	TxDOT		
Oscar Solis	CTRMA	Osolis@ctrma.org	OS
Yannis Tassoulas	WSP/ CTRMA	Yannis.Tassoulas@wsp.com	IT
Jose Valenzuela	Parsons/GHC	Jose.valenzuela@parsons.com	JV
Chad Yount	Sundt/ GHC	cayount@sundt.com	
Jeremy Hutchins	Parsons/GHC	jeremy.hutchins@parsons.com	JH
Matt Zaskey	Parsons/GHC	Matt.zaskey@parsons.com	MZ

Project Name:	183 North Mobility Project		
Meeting Purpose:	TWG - Drainage / Utilities/ Env.	**Meeting No.**	3
Meeting Coordinator(s)	Tina Murphy/Sandee Khory/Jason Buntz		

Date:	June 8, 2021			**Time:**	9:30AM to 11:00AM
Location:	GHC Project Office 4th Floor Conference Room			**Room:**	N/A
Address:	9430 Research Blvd; Building 4, Suite 400	**City:**	Austin, TX	**Zip:**	N/A
Phone:	N/A				

Drainage Agenda:	
3.1	Attendance
3.2	Drainage Agenda 1) Review Action Items from Previous meeting a) (see action items below for detailed information) 2) Design Progress 3) Clarification of Ultimate Design 4) 3D Modeling walkthrough. 5) Questions.
3.3	1. Design Progress a. Vickrey – Official start date of 06/14/21. Mariya Kret is the drainage lead for Vicrey. i. On Boarding process has started – they are attending QC training on June 10, 2021 ii. Vickreys scope of work is Segment 2 existing drainage, proposed drainage, and culverts. Parsons to so Segment 2 SWPPP. b. WPAP – Kicked off internal permitting process June 7, 2021 i. WPAP Permit Application Responsibility Matrix Created. ii. Meeting with TxDOT and GEC is being scheduled. c. ORD Library and templates are completed and QC'd d. Culverts – Culvert base files have been created. Currently cutting sheet files. e. Existing Storm Drainage – All drainage areas are completed. Existing drainage analysis will be completed this week and QC will start at the end of the week. i. Will present plans and calcs at the next TWG meeting. f. Proposed Storm Drainage – starting this week. g. SWPPP – started last week. h. WQ structures – in progress will have more information next week.

3.4	2. Clarification of Ultimate Design a. Parsons is seeking clarification on the following three statements. *(1)* TP 15.2.2 *The DB Contractor shall perform hydrologic analyses for the design of drainage features for the fully developed offsite conditions. The hydrologic and water quality analysis and sizing do not need to include the Ultimate Design, future direct connector ramps and RM 620. The onsite storm drain design and water quality BMP design shall accommodate the Ultimate Design improvements, without need for removal. Water quality BMPs shall accommodate the future foundations for the direct connectors.* *(2) TP 15.7.1 The Ultimate Design impervious cover (referred to as Ultimate Post Project impervious cover), excludes the FM620/SH 45 direct connectors and associated improvements.* (3) *183 N DRFPD – Responses 080919 – Number 485 – The RFDP state "the hydrological and water quality analysis and sizing do not need to include the Ultimate Design," but "the onsite storm drain and water quality BMP design shall accommodate the Ultimate Design Improvements." Our understanding is that the proposal does not have to consider the ultimate areas for hydrological calculations, but the ultimate configuration in order to place elements of the drainage systems. This is correct?* *b.* It is expected that the Water Quality analysis for the ultimate will be designed during this phase of construction. Item 15.2.2 should read "*The hydrologic* ~~***and water quality***~~ *analysis and sizing do not need to include the Ultimate Design…"* *c.* Also refer to Attachment 15-1 "The Ultimate Design impervious cover(referred to as Ultimate Post Project impervious cover), excludes the FM620/SH45 direct connectors and associated improvements." *i.* Parsons is only responsible for design WQ for ultimate in locations other than FM620/SH45. *d.* The footprint of the water quality structures, and detention structures cannot interfere with the ultimate design. i. TxDOT is not providing the footprint of the ultimate design detention. ii. Parsons is responsible for determining this future footprint and designing the structure to avoid future conflict. e. Txdot asked -How is the Ultimate DC going to be drained? i. This information has not been provided as part of the RID's and is not considered part of this scope of work. ii. Parsons will take into account the impervious area and size WQ and Detention accordingly. iii. Parsons is not designing the distribution of the stormwater.

	f. To further clarify the design criteria a PDF markup showing which portion of the ultimate are to be excluded from this analysis. This PDF will be presented at a future meeting.
3.5	3. 3-D cells and Suda Seed File a. Parsons presented the 3D Cell files and the SUDA seed file. b. May 28th Parsons presented the same files to Txdot and K Friese. i. K Friese requested meeting minutes from the 28th to be distributed. c. Parsons to post cell file and seed file on Sharepoint.
3.6	4. ATC 5 – not ready to discuss during this TWG meeting. Still working through final details will discuss on the 15th.

Drainage Action Items		**Responsible Party**	**Due**
DR01.03	Set up internal separate meetings for WPAP First internal meeting was June 7, 2021	T.Murphy	Closed
DR01.04	Verify the classification of some existing dams. Item is closed after site visits to detention areas that verified there is no hazard.	T.Murphy	Closed
DR01.05	Coordination with the City of Austin Water Quality Ponds	T.Murphy	05/28/21 – In progress
DR01.06	Set up meeting with Zach Lanfear, Joseph Goessling from TxDOT , and Ruth Haberman from K Friese / GEC regarding TCEQ and drainage requirements as well as Jon Geiselbrecht regarding fish/wildlife commitments. Zach Lanfear is available to meet the 10th or 11th	Mark Frye/T.Murphy	In progress
DR3.01	Create a PDF markup showing which portion of the ultimate are to be excluded from this analysis.	T.Murphy	06/15/21
DR3.02	May 28th 3D meeting – distribute minutes	T.Murphy	06/15/21
DR3.03	Distribute SUDA seed file and 3D cell library.	T.Murphy	06/15/21

Environmental Agenda:	
3.3	Geotech activity and notifications.

	a. 4 notifications from Geotech. Two have been determined to have no voids and 1 is confirmed a void. Currently being evaluated for threatened and endangered species. Both bore holes are outside the recharge zone. b. Second hole is obstructed from rocks that have fallen into the hole, need clarification on how to progress. c. Options are to drill through obstructions or abandon boring. d. TCEQ has guidance on how to plug voids. e. North bound side of 183 in between mainlanes and frontage roads from Braker and Balcones there is black tar. It is in the outer separation on the northbound side. Appears a spill occur. Site investigation to verify.
3.4	Environmental discussion: Potential void discoveries - geotech. There have been four potential voids during geotech activity. Hicks & Company's geoscientist has evaluated the borings with a downhole camera and determined that two borings did not contain voids, one did contain a void, and the fourth was obstructed by rock. The communication process consists of Arias observing a potential void during drilling by a drop in the drill bit or loss of air or fluid. They call Chris or Fred (GHC) and they call Pat Frost P.G. (Hicks & Company). If Pat determines it to be a void with the downhole camera, she calls a permitted karst scientist (Zara Environmental) to investigate for threatened and endangered karst invertebrates. One of the four borings is being evaluated by Zara, every 48 hours for 2 weeks. A "void" is greater than six inches, per TxDOT Austin District standards. GHC requests clarification on the obstructed boring from the RMA/GEC - is it necessary to clear the obstruction or can the hole be backfilled as is?

Environmental Action Items		**Responsible Party**	**Due**
EN01.01	Dead Dog Cave identification and project impacts were reviewed. CTRMA/GEC to evaluate issues and discuss with GHC how to proceed. GHC has not marked out soil boring locations and will not drill in this area until authorized by the GEC. 06/08/21 – Environmental consultants are currently mapping this cave. Zach, TxDOT request a copy of this when it is complete.	D. Freeman	In progress

EN01.02	Review ATC 2 for sound wall impacts south of 183/Mopac. There ATC does not appear to impact the existing Sound Wall south of Steck.	J. Buntz	Completed
EN01.03	Review ATC 2 for Tree Preservation issues. The trees in the area of the intersection will be impacted. Will need to document the process.	J. Buntz	Completed
EN01.04	Develop Environmental Training for Design.	J. Buntz	In Progress
EN02.01	Meeting internally to discuss Environmental/Noise updates resulting from ATC 2 Meeting on June 9	J.Buntz	Closed
EN02.02	CTRMA is mapping out dead dog cave.	J.Buntz	Closed
EN03.01			

Utilities Agenda:	

3.4	Utilities Agenda
	Review action items from previous meeting.
	• UT02.01 – Confirmed with municipal department that an SCS permit should not be necessary for manhole adjustments, or WW removals. Following up with TCEQ to get this in writing.
	  ○ If we are able to have AW agree that it is not necessary to replace or extend encasement on the two identified WW lines, then no SCS permits will be required.
	• UT02.02 – CF still collecting updated As-Builts and uploading to PW as they are received
	• UT02.03 – Austin District special provisions document has been uploaded to PW
	• UT02.04 – CF will continue to build flow chart as we meet with utilities to confirm which protection methods they approve for their facilities
	• UT02.05 – CF submitted first monthly Utility Tracking Report
	• SUE Field Work
	  ○ Progress update
	  ○ CF will provide data collected each week to GHC and PDT and review different conflict areas in utility alignment meeting
	  ○ Have completed 20 THs, almost all low wire readings and the majority of WW manhole inverts

	○ CF has begun setting up Utility Strip Map cut sheets ○ CF 3D modeling update • Utility Coordination ○ Have contacted utilities to set up kick offs meetings and provided MUAA templates ▪ AW meeting scheduled for Monday 6/21/21 from 3:00 – 4:00 PM ▪ Zayo meeting scheduled for Thursday 6/24/21 from 1:00 – 2:00 PM ▪ TGS meeting scheduled for Thursday 7/1/21 from 10:00 – 11:00 AM ○ Reviewing UCM to verify conflicts prior to meetings with utilities Planned Activities (Week Ahead) • Continue SUE Field Work • Schedule Utility Kick Off Meetings • Update Utility Tracking Report (UTR)

Utilities Action Items		Responsible Party	Due
UT01.01	Review SCS (Sewage Collection System) Permit Application Requirements for sanitary sewer relocations	S. Khory	Closed
UT01.01	Prepare exhibits for areas of proposed SUE Field Investigation where one lane closure is needed and only two frontage road lanes exist for next TWG #2	Derrick Horvath	Closed
UT01.02	Upload Existing Utility File (*.dgn) to ProjectWise	Derrick Horvath	Closed
UT01.03	Review ATC 2 and provide any comments on utility conflicts	Derrick Horvath	Closed
UT02.01	Confirm if WW removals require SCS permit application. Confirmation from internal team it is not required. Following up with TCEQ for verification.	D.Horvath	06/02/21
UT02.02	Upload utility as-builts to PW	D.Horvath	In Progress

	Currently uploading as they are received.		
UT2.03	Upload TxDOT Austin District Special Provisions to PW Uploaded to PW. Email link to be sent.	D.Horvath	Closed
UT2.04	Create Flow Chart / Decision Diagram for SUP/Sidewalk design that incorporates Austin District min clearance table.	D.Horvath	In Progress
UT2.05	Prepare Draft UTR to submit to CTRMA/GEC review by end of May. Submitted	D.Horvath	Closed

Task Force:	183 North Mobility Drainage/ Utilities/ Environmental Task Force		
Date:	June 29, 2021	**Time:**	9:30 AM TO 11 AM
Location:	Austin, TX	**Room:**	TBD

Name	Company	Email	Initial
Britt Akins	Hicks & Company/GHC	bakins@hicksenv.com	
Gordon Anderson		ganderson@ai-uc.com	GA
Micah Ater	WSP/ CTRMA	Micah.Ater@wsp.com	
Michael Bauer	Walsh / GHC	mbauer@walshgroup.com	
Jason Buntz	Hicks	Jbuntz@hicksenv.com	JB
Taylor Burford	Atkins / CTRMA	Taylor.Burford@atkinsglobal.com	
Carlos DelaRosa			
William Dooley	Parsons/GHC	William.dooley@parsons.com	
Daniel Feeman	Atkins / CTRMA	daniel.freeman@atkinsglobal.com	
Pat Frost	Hicks & Company/GHC	pfrost@hicksenv.com	
Mark Frye	Parsons/GHC	Mark.frye@parsons.com	WMF
Jon Geiselbrecht	TxDOT/ CTRMA	Jon.Geiselbrecht@txdot.gov	JG
Joseph Goessling	TxDOT/ CTRMA	Joseph.Goessling@txdot.gov	
Pat Gibbons	Parsons/GHC	Patrick.gibbons@parsons.com	PG
Ruth Haberman	K Friese / CTRMA	rhaberman@kfriese.com	RH
Nedra Harris	Parsons/GHC	nedra.harris@parsons.com	
Ryan Holloway	GHC	Rchollawy@sundt.com	RH
Derrick Horvath	Cobb Fendley	d.horvath@cobbfendly.com	DAH
John Jenkins	WSP	John.jenkins@wsp.com	
Asif Khan	Parsons/GHC	Asif.khan@parsons.com	
Sandee Khoury	Cobb Fendley	Skoury@cobbfendly.com	SK
Sri Koneru	WSP/ CTRMA	Srikanth.Koneru@wsp.com	SK
Mariya Kret	Vickrey	mkret@vickreyinc.com	MK

Task Force:	183 North Mobility Drainage/ Utilities/ Environmental Task Force		
Date:	June 29, 2021	**Time:**	9:30 AM TO 11 AM
Location:	Austin, TX	**Room:**	TBD

Name	Company	Email	Initial
Carolina Lara	K Friese	Clara@kfriese.com	CL
Andrea Larrea	GHC	alarrea@walshgroup.com	
Zach Lanfear	TxDOT AUS	Zach.lanfear@txdot.gov	
Rohit Lasod	Parsons/GHC	Rohit.Lasod@parsons.com	RL
Chris Leintz	GHC	cmleintz@sundt.com	CL
Mike Martinez	Parsons/GHC	michael.martinez@parsons.com	
Josh Manns	Parsons/GHC	Josh.manns@parsons.com	
Brandon Merecka	GHC	Brandon.merecka@sundt.com	
Juan Miranda	Sundt	jrmiranda@sundt.com	JM
Tina Murphy	Parsons/GHC	Tina.murphy@parsons.com	TM
Kevin O'Connor	Parsons/GHC	Kevin.oconnor@parsons.com	
Vicki Ortega	K Friese	VOrtega@kfriese.com	
Pat Pluenneke	Walsh / GHC	ppluenneke@walshgroup.com	PP
Ed Rashin	Hicks & Company/GHC	erashin@hicksenv.com	
April Sandoval	TxDOT	April.Sandoval@txdot.gov	AS
Mike Sexton	TxDOT		
Oscar Solis	CTRMA	Osolis@ctrma.org	
Yannis Tassoulas	WSP/ CTRMA	Yannis.Tassoulas@wsp.com	IST
Jose Valenzuela	Parsons/GHC	Jose.valenzuela@parsons.com	
Joey Williams	GHC	joewilliams@walshgroup.com	JW
Chad Yount	Sundt/ GHC	cayount@sundt.com	

Project Name:	183 North Mobility Project		
Meeting Purpose:	TWG - Drainage / Utilities/ Env.	**Meeting No.**	6
Meeting Coordinator(s)	Tina Murphy/Sandee Khory/Jason Buntz		

Date:	June 29, 2021			**Time:**	9:30AM to 11:00AM
Location:	GHC Project Office 4th Floor Conference Room			**Room:**	N/A
Address:	9430 Research Blvd; Building 4, Suite 400	**City:**	Austin, TX	**Zip:**	N/A
Phone:	N/A				

Drainage Agenda:	
5.1	Attendance
5.2	Drainage Agenda 1) Review Action Items from Previous meeting. a) Detailed Trench drain along wall for ATC i) Presented trench drain detail to TxDOT. ii) TxDOT questioned if there is enough bedding under the trench drain. iii) Manufacturers recommended bedding supports traffic loads and prevents movement of the trench. iv) Proposed trench drain is traffic loading trench drain being used for pedestrian applications and will be between a wall and sidewalk. Parsons does not have a concern with the reduced bedding. v) TxDOT requested a TxDOT structural engineer to review installation and provide an opinion. vi) Parsons stated we will do an internal review and present opinion to TxDOT. vii) Parsons will also provide a detailed drawing of the trench drain along the wall as part of the 30% submittal. viii) Walsh pointed out that there are other walls on the project with weep holes that outfall onto sidewalks and the water drains across them. Are we required to address the drainage at those locations also? ix) No, the project does not apply these criteria to all walls, only existing wall which is included in ATC 5. x) TxDOT asked about coordination with City of Austin for maintenance of Sidewalk. xi) Coordination to be addressed by CTRMA.

2) 30% Submittal Design Progress.
   a) ORD LIibrary and Template – 100% Complete.
   b) Culverts
      i) P&P sheets are set up
      ii) Culvert profiles are cut and set based upon as built data.
      iii) Culverts are currently being survey.
      iv) TxDOT asked about existing culverts under walls and under the toe of influence for proposed walls. Are existing culverts going to be under the loading zone of the proposed walls?
      v) Some culverts will be in the loading zone of the proposed walls. Any structures under proposed walls will be evaluated and reinforced as needed.
      vi) Culverts in physical conflict with proposed walls will be relocated.
      vii) Existing drainage under walls will be maintained but evaluated for structural loading.
   c) Existing Storm drainage models
      i) Finishing QC this week
   d) Proposed Storm drainage design
      i) GeoPACK models have been convert to ORD
      ii) Started on proposed design this week.
      iii) Median drainage will be designed first.
   e) SWPPP
      i) Base files are set up for Phase 1 and Phase 2. Plan sheets have been cut.
      ii) Currently laying out Temporary BMP's and Sediment traps.
   f) Water Quality Ponds
      i) Basin A – Pre and Post Calcs are completed, starting on Detention design.
      ii) Basin B – have not started work on it yet
      iii) Basin C - have not started work on it yet
      iv) Basin D – have not started work on it yet.
      v) Basin E – Pre and Post Calcs are completed, WQ and Detention preliminary sizing is completed.
      vi) Basin F – All calcs are completed, Plan sheets are developed, started on QC and the WQ report.
      vii) Basin G – All calcs are completed, Plan sheets are developed, started on QC and the WQ report.
      viii) Basin 360 - Pre and Post Calcs are completed, starting on Detention design.
      ix) Basin H - Pre and Post Calcs are completed, starting on Detention design.
      x) Plan sheets are being generated as basins are competed.
      xi) Coordination with structural is occurring as basins are being completed.

3) TCEQ spreadsheet Batch Detention Calculations.
   a) TCEQ provides a calculation template (available on their website) that calculates TSS removal and required water quality volume for a given BMP.
   b) The downloaded spreadsheet does not provide an option for the TP required Batch Detention type BMP.
   c) The spreadsheet pulldown menu can be manipulated to provide a Batch Detention BMP with 91% removal efficiency and where it will calculate the required water quality volume.
   d) Detailed sizing for Batch Detention is not included on the spreadsheet. Pond dimensions and configuration are be determined in accordance with the TCEQ guidance document RG-348 addendum dated January 20, 2017 (Section 3.2.17) , and per volume required calculations on the spreadsheet.
   e) K. Friese stated that they have submitted modified spreadsheets to TCEQ and they have been approved.
   f) Team will verify with TCEQ that spreadsheet modification to include Batch Detention TSS Removal rate and sizing procedure is appropriate.

4) TP 15.2.2 *"All Models must be updated to the latest version of relevant software and georeferenced"* HEC HMS 3.5 vs current.
   a) Original regional HEC-HMS version 3.5 models containing the watersheds the 183N project were included with the RID documents
   b) The TP requires use of the latest version software to be utilized for HEC-HMS. Version 3.5 is not the latest therefore the models need to be upgraded to the latest.
   c) Errors are encountered when the models are run in HEC-HMS v4.3. Reaches within the models need to have "Index Flows" provided for a specific reach routing method.
   d) When Index flows are entered the output results in v4.3 vary from the output results when run in v3.5. This could pose challenges when evaluating pre- vs. post conditions impacts.
   e) K. Friese states that the models have to be updated per the TP requirements.
   f) Parsons is concerned with the amount of work and liability of updating the entire regional models. This project is less than 5% of the regional model.
   g) Joe Goessling, TxDOT stated that he would check with City of Austin to see if 1) there is an updated regional model, or 2) they have upgraded their model to a more current version of HEC-HMS.
5) Questions.
   a) K. Friese asked about coordination with TCEQ regarding the WPAP submittal process.
   b) Meeting planned to be scheduled the third week of July.
   c) Parsons is proposing a 2 phase approach with the median access as an early work package.
   d) K.Friese stated that it would be a good idea to inform TCEQ about the expected quantity of submittal packages.

	e) met with TCEQ last week and discussed that there will be several packages for this project. TCEQ did not object.

Drainage Action Items		Responsible Party	Due
DR01.05	Coordination with the City of Austin Water Quality Ponds. Currently being reviewed by TxDOT. Oscar Solis is working on the agreement. 06/29/21 – no updates from TxDOT yet	T.Murphy	05/28/21 – In progress
DR3.02	May 28th 3D meeting – distribute minutes	T.Murphy	06/15/21
DR4.02	Check the City of Austin Website for updated flood complaints. Email Request to the City of Austin – Grab a shape file for the area you need and send to the City of Austin. Send shape file request to Ruth or Carolina	T. Murphy	InProgress
DR4.03	Send detailed trench drain and specification to Carlos DelaRosa from Txdot Provide project specific exhibit that includes a cross section and outfall location.	T.Murphy	Completed
DR5.01	Anderson Mill Structures – further investigation into if this was addressed in the Water Quality Memo or any other documents. This was addressed in memo. It was the opinion of KFriese that it will not impact project. But recommended that the issue is further clarified.	R.Haberman	06/29/21
DR6.01	Do an internal review of the installation of the trench drain with reduced bedding and present opinion to TxDOT.	Will Dooley	07/12/21
DR6.02	Provide a detailed drawing of the trench drain along the wall as part of the 30% submittal.	Will Dooley	07/16/21
DR6.03	Anderson Mill Structures - Further research to be done with regards to the intent of the statement in the final BO	Jason Buntz	07/12/21

DR6.04	Verify TCEQ will accept modified WQ calculation spreadsheets.	Tina Murphy	07/16/21
DR6.05	Discuss with COA if there are any Regional Watershed model updates are available or if they have models that are based off the latest HEC-HMS software.	Joseph Goessling	
DR6.06	Set up meeting with TCEQ	Mark Frye	07/16/21

Environmental Agenda:	
5.3	- Total number of geotech voids currently being evaluated - 7 - Karst invertebrate surveys for DDC12-11 have been completed and released back to Arias - Regarding the "existing stormwater management structure located south of the Anderson Mill intersection", the intent of the Biological Opinion needs to be followed. Additional clarifying language might be found in the Final EA according to TxDOT. J.Buntz to review the EA and provide feedback to T.Murphy. - Biannual report to USFWS is required by the Biological Opinion; Hicks & Company has completed a draft and provided to GHC. Additional data will be obtained through June 30th, and the report can be transmitted to the RMA for submittal to TxDOT and FWS in July.

Environmental Action Items		**Responsible Party**	**Due**
EN01.01	Dead Dog Cave identification and project impacts were reviewed. CTRMA/GEC to evaluate issues and discuss with GHC how to proceed. GHC has not marked out soil boring locations and will not drill in this area until authorized by the GEC. 06/08/21 – Environmental consultants are currently mapping this cave. 06/15/21 – Currently being mapped.	D. Freeman	In progress
EN01.04	Develop Environmental Training for Design. Still in progress. Anticipated to be completed by July.	J. Buntz	In Progress
EN06.01	Existing stormwater management structure located south of the Anderson Mill intersection "Additional clarifying language might be found in the Final EA according to TxDOT.	J.Buntz	07/12/21

Utilities Agenda:	
5.4	SUE Progress Update • Have completed 50 THs, all low wire readings and the majority of WW manhole inverts • Will start 3D models for crossing (by Segment) to make it more manageable • Utility files with first batch of SUE data were uploaded to PW on 6/18/2021. Future updates will be made in PW. • Design disciplines will need to reference in new files • Aqua polygons of where SUE was completed with date in NO PLOT LAYER • Old data "clipped out" and updated with new SUE field data Utility Coordination • Utility meetings beginning next week • Provide updates from AT&T meeting on Thursday 6/24/21 – o *Contractor Managed (single-vendor potential issue; Hugo to follow-up this week)* o *12" cover from bottom of sidewalk to top of pipe* o *ATT mentioned potential PVC shortage (vendors not providing lead times)* • Provide updates from Zayo meeting on Thursday 6/24/21 – Contractor Managed o *Preferred more than 12" below bottom of sidewalk, but would discuss on case-by-case basis* o *Reside in ATT ducts in several locations* • TGS/ONE Gas meeting scheduled for Thursday 7/1/21 from 10:00 – 11:00 AM • Reviewing UCM to verify conflicts prior to meetings with utilities Interdisciplinary Coordination Items • Meeting with design disciplines to coordinate conflicts with utilities (Met with bridge design for Segment 1C) o *Bridge noted conflicts w/existing drainage, traffic signals, illumination, ITS* o *No anticipated utility conflicts at this time (TH's to confirm)* • Utility removal plans • *Create Utility Removal Sheets by Utility Owner* • *Also include notes on civil plans* • *Note "remove as necessary" for bridge foundations (per each)* *Agreement language changes Process:*

	○ *Utility Owner comments* ○ *GHC's approval* ○ *CTRMA (through GEC) approval* ○ *Use new language* Planned Activities (Week Ahead) • Continue SUE Field Work • Continue scheduling and hold Utility Kick Off Meetings • Update Utility Tracking Report (UTR) • Continue to develop design refinement for different disciplines/meet with design disciplines • Develop design refinement tracker

Utilities Action Items		**Responsible Party**	**Due**
UT02.02	Upload utility as-builts to PW Currently uploading as they are received.	D.Horvath	In Progress
UT2.04	Create Flow Chart / Decision Diagram for SUP/Sidewalk design that incorporates Austin District min clearance table.	D.Horvath	In Progress
UT5.01	meet with Signals to discuss realignment of UG electric	D.Horvath	07/02/2021
UT5.02	meet with signals, ITS and illumination to discuss utility service needs	D.Horvath	07/02/2021
UT5.03	–review utility removal locations and areas with asbestos	D.Horvath	06/29/2021

Task Force:	183 North Mobility Drainage/ Utilities/ Environmental Task Force		
Date:	July 12, 2021	**Time:**	9:30 AM TO 11 AM
Location:	Austin, TX	**Room:**	TBD

Name	Company	Email	Initial
Britt Akins	Hicks & Company/GHC	bakins@hicksenv.com	
Gordon Anderson		ganderson@ai-uc.com	GA
Micah Ater	WSP/ CTRMA	Micah.Ater@wsp.com	
Michael Bauer	Walsh / GHC	mbauer@walshgroup.com	
Jason Buntz	Hicks	Jbuntz@hicksenv.com	JB
Taylor Burford	Atkins / CTRMA	Taylor.Burford@atkinsglobal.com	TB
Carlos DelaRosa			CD
William Dooley	Parsons/GHC	William.dooley@parsons.com	WD
Daniel Feeman	Atkins / CTRMA	daniel.freeman@atkinsglobal.com	
Pat Frost	Hicks & Company/GHC	pfrost@hicksenv.com	PF
Mark Frye	Parsons/GHC	Mark.frye@parsons.com	WMF
Jon Geiselbrecht	TxDOT/ CTRMA	Jon.Geiselbrecht@txdot.gov	JG
Joseph Goessling	TxDOT/ CTRMA	Joseph.Goessling@txdot.gov	JG
Pat Gibbons	Parsons/GHC	Patrick.gibbons@parsons.com	PG
Ruth Haberman	K Friese / CTRMA	rhaberman@kfriese.com	RH
Nedra Harris	Parsons/GHC	nedra.harris@parsons.com	NH
Ryan Holloway	GHC	Rchollawy@sundt.com	RH
Derrick Horvath	Cobb Fendley	d.horvath@cobbfendly.com	DAH
John Jenkins	WSP	John.jenkins@wsp.com	
Asif Khan	Parsons/GHC	Asif.khan@parsons.com	
Sandee Khoury	Cobb Fendley	Skoury@cobbfendly.com	SK
Sri Koneru	WSP/ CTRMA	Srikanth.Koneru@wsp.com	SK
Mariya Kret	Vickrey	mkret@vickreyinc.com	MK

Task Force:	183 North Mobility Drainage/ Utilities/ Environmental Task Force		
Date:	July 12, 2021	**Time:**	9:30 AM TO 11 AM
Location:	Austin, TX	**Room:**	TBD

Name	Company	Email	Initial
Carolina Lara	K Friese	Clara@kfriese.com	CL
Andrea Larrea	GHC	alarrea@walshgroup.com	
Zach Lanfear	TxDOT AUS	Zach.lanfear@txdot.gov	
Rohit Lasod	Parsons/GHC	Rohit.Lasod@parsons.com	RL
Chris Leintz	GHC	cmleintz@sundt.com	CL
Mike Martinez	Parsons/GHC	michael.martinez@parsons.com	MM
Josh Manns	Parsons/GHC	Josh.manns@parsons.com	
Brandon Merecka	GHC	Brandon.merecka@sundt.com	
Juan Miranda	Sundt	jrmiranda@sundt.com	JM
Tina Murphy	Parsons/GHC	Tina.murphy@parsons.com	TM
Kevin O'Connor	Parsons/GHC	Kevin.oconnor@parsons.com	
Vicki Ortega	K Friese	VOrtega@kfriese.com	
Pat Pluenneke	Walsh / GHC	ppluenneke@walshgroup.com	PP
Ed Rashin	Hicks & Company/GHC	erashin@hicksenv.com	
April Sandoval	TxDOT	April.Sandoval@txdot.gov	AS
Mike Sexton	TxDOT		
Oscar Solis	CTRMA	Osolis@ctrma.org	
Yannis Tassoulas	WSP/ CTRMA	Yannis.Tassoulas@wsp.com	IST
Jose Valenzuela	Parsons/GHC	Jose.valenzuela@parsons.com	
Joey Williams	GHC	joewilliams@walshgroup.com	JW
Chad Yount	Sundt/ GHC	cayount@sundt.com	
Nikole Meade	Parsons/GHC	Nikole.meade@parsons.com	NM
Catherine Sheane	Parsons/GHC	Catherine.sheane@parsons.com	CS
Shri Eathdepake	LJA	Seathdepake@lja.com	SE

Angel Karr	LJA	akarr@lja.com	AK
Stan Reece	ACI	Sreece@aci-group.net	SR
Jay Miller			JM

Project Name:	183 North Mobility Project		
Meeting Purpose:	TWG - Drainage / Utilities/ Env.	**Meeting No.**	7
Meeting Coordinator(s)	Tina Murphy/Sandee Khory/Jason Buntz		

Date:	June 29, 2021			**Time:**	9:30AM to 11:00AM
Location:	GHC Project Office 4th Floor Conference Room			**Room:**	N/A
Address:	9430 Research Blvd; Building 4, Suite 400	**City:**	Austin, TX	**Zip:**	N/A
Phone:	N/A				

Drainage Agenda:	
7.1	Attendance
7.2	Drainage Agenda 1) Review Action Items from Previous meeting. a) TxDOT discussed with COA if there are any Regional Watershed model updates available or if they have models that are based off the latest HEC-HMS software. City of Austin has not updated the models. TxDOT suggests that the models remain with HEC HMS 3.5. KFA concurs. A waiver will need to be issued by Parsons. Parsons will continue to model the WQ structures and detention with HEC HMS 3.5 b) Do an internal review of the installation of the trench drain with reduced bedding and present opinion to TxDOT. Internal review is completed. Will asked if a vehicle load rated trench drain required at the back of sidewalk and face of wall? A pedestrian rated trench drain will meet the bedding requirement and there will be not vehicle traffic on this sidewalk. Parsons will propose pedestrian rated in the 30% 2) 30% Submittal Design Progress. a) ORD LIibrary and Template – 100% Complete. b) Culverts i) P&P sheets are set up ii) Culvert profiles are cut and set based upon as built data. iii) Culverts are currently being survey. c) Existing Storm drainage models i) QC is complete d) Proposed Storm drainage design i) Progressing with median drainage design e) SWPPP i) Base files are set up for Phase 1 and Phase 2. Plan sheets have been cut. ii) Currently laying out Temporary BMP's and Sediment traps. f) Water Quality Ponds

i) Basin A – Pre and Post Calcs are completed, starting on Detention design.
ii) Basin B – Pre and Post Calcs are completed, starting on Detention design.
iii) Basin C - Pre and Post Calcs are in progress
iv) Basin D – have not started work on it yet.
v) Basin E – Pre and Post Calcs are completed, WQ and Detention preliminary sizing is completed.
vi) Basin F – Finalizing QC
vii) Basin G – Finalizing QC
viii) Basin 360 - Pre and Post Calcs are completed, starting on Detention design.
ix) Basin H - Pre and Post Calcs are completed, starting on Detention design.
x) Plan sheets are being generated as basins are competed.
xi) Coordination with structural is occurring as basins are being completed.

3) Allowable Pipe Materials for Water Quality Structures. The TP states *"15.4.2 Materials for culverts crossing general purpose lanes, ramps, or frontage roads must be reinforced concrete pip. Materials for other culverts (such as driveways, sidewalks, or local streets) that are not reinforced concrete pipe may be determined based on engineering analysis as approved by the Mobility Authority."*

a) TCEQ does not specify pipe materials either.
b) Valves cannot be used on concrete pipe. Parsons is proposing to use PVC pipe.
c) Standards that TxDOT are developing shows PVC pipe. These standards will be shared by KFA for reference.
d) Standards issued after the start of this contract will not be used on the project.
e) TxDOT stated that PVC Pipe can be used for internal batch detention piping, however final outfall from flow control structure to outfall shall be RCP.

4) JPS Outfall discussion – What do we have to treat and how do we want to treat it.
a) Jon Geiselbrecht from TxDOT stated the intent is to only treat structures within TxDOT ROW. Offsite drainage does not have to be treated for WQ

5) Joe Goessling from TxDOT asked about the calculations for the influence of walls on existing culverts and pipe.
a) Parsons has not started those calculations. Walls and Proposed drainage needs to be progressed to be able to identify structures that will be impacted.

Drainage Action Items		**Responsible Party**	**Due**
DR01.05	Coordination with the City of Austin Water Quality Ponds. Currently being reviewed by TxDOT. Oscar Solis is working on the agreement. 06/29/21 – no updates from TxDOT yet 07/13/21 – there has been progress. TxDOT has been giving a deadline for about a month to finalize	T.Murphy	05/28/21 – In progress

	the agreement. Oscar will send us a draft agreement.		
DR3.02	May 28th 3D meeting – distribute minutes	T.Murphy	06/15/21
DR4.02	Check the City of Austin Website for updated flood complaints. Email Request to the City of Austin – Grab a shape file for the area you need and send to the City of Austin. Send shape file request to Ruth or Carolina – After 30% submittal	T. Murphy	On Going
DR5.01	Anderson Mill Structures – (JPS outfall) further investigation into if this was addressed in the Water Quality Memo or any other documents. This was addressed in memo. It was the opinion of KFriese that it will not impact project. But recommended that the issue is further clarified. Jon Geiselbrecht from TxDOT stated the intent is to only treat structures within TxDOT ROW. Offsite drainage does not have to be treated for WQ	R.Haberman	Completed
DR6.01	Do an internal review of the installation of the trench drain with reduced bedding and present opinion to TxDOT.	Will Dooley	Completed
DR6.02	Provide a detailed drawing of the trench drain along the wall as part of the 30% submittal.	Will Dooley	In Progress
DR6.03	Anderson Mill Structures - Further research to be done with regards to the intent of the statement in the final BO	Jason Buntz	Completed
DR6.04	Verify TCEQ will accept modified WQ calculation spreadsheets.	Tina Murphy	07/16/21
DR6.05	Discuss with COA if there are any Regional Watershed model updates are available or if they have models that are based off the latest HEC-HMS software. City of Austin has not updated the models. COA suggests that the models remain with HEC HMS 3.5. KFA concurs. A waiver will need to be issued by Parsons. Parsons will continue to model the WQ structures and detention with HEC HMS 3.5	Joseph Goessling	Completed

DR6.06	Set up meeting with TCEQ	Mark Frye	07/16/21
DR7.01	Issue waiver to keep HEC HMS 3.5 Send waiver to Yannis	Tina Murphy	
DR7.02	Exhibit showing which inlets will be rerouted to meet the Final BO criteria	Tina Murphy	07/20/21

Environmental Agenda:	
7.3	Review Action Items

Environmental Action Items		**Responsible Party**	**Due**
EN01.01	Dead Dog Cave identification and project impacts were reviewed. CTRMA/GEC to evaluate issues and discuss with GHC how to proceed. GHC has not marked out soil boring locations and will not drill in this area until authorized by the GEC. 06/08/21 – Environmental consultants are currently mapping this cave. 06/15/21 – Currently being mapped.	D. Freeman	In progress
EN01.04	Develop Environmental Training for Design. Still in progress. Anticipated to be completed by July. 07/13/21 -Tenative dated for training July 26 in the afternoon.	J. Buntz	In Progress
EN06.01	Existing stormwater management structure located south of the Anderson Mill intersection "Additional clarifying language might be found in the Final EA according to TxDOT.	J.Buntz	completed

Utilities Agenda:	
7.4	SUE Progress Update • Have completed 70 THs, all low wire readings and the majority of WW manhole inverts • Have modeled Segment 1A modeling conflict areas/crossings • Will complete all SUE work requiring traffic control this week and all SUE on identified conflict areas next week. Will start SUE work on crossings to assist with 3D modeling after that

- Existing Utility Roll Plot internal submittal mid-August

Utility Coordination

- Utility meeting Update
  - TGS/ONE Gas meeting update
    - Owner managed
    - TGS has a standard detail when minimum cover is not achievable
    - Provided gas service email to Glenn Murphy
  - MCI meeting update
    - DB managed
    - Will coordinate with ongoing new installations. MCI to determine if additional meeting with new install group is necessary
    - 4" concrete cap for 2'-3' of cover and concrete encased for 1'-2' of cover and open to joint trenches
    - MCI can deliver materials to site if GHC wants project address to be added to their approved delivery list
- Updating UCM with SUE information
- Review Asbestos pipe locations/abatement process
- Utility service meeting update
  - 3-4 month process for getting service after submitting application
- **If utilities do not meet minimum TxDOT UAR depth in the existing condition, the DB team will not be responsible for addressing the issue if existing cover is maintained or improved**

Utility Design

- Utility Design Schedule
  - 30% Wastewater internal submittal on 7/29
  - 30% Water internal submittal on 8/26
  - 30% Telecom internal submittal on 8/26

Planned Activities (Week Ahead)

- Continue SUE Field Work
- Continue scheduling and hold Utility Kick Off Meetings
- Update Utility Tracking Report (UTR)
- CF to develop list of utilities and current status

Utilities Action Items		**Responsible Party**	**Due**
UT02.02	Upload utility as-builts to PW Currently uploading as they are received.	D.Horvath	In Progress
UT2.04	Create Flow Chart / Decision Diagram for SUP/Sidewalk design that incorporates Austin District min clearance table.	D.Horvath	In Progress

UT5.01	meet with Signals to discuss realignment of UG electric	D.Horvath	Completed
UT5.02	meet with signals, ITS and illumination to discuss utility service needs	D.Horvath	Completed
UT5.03	–review utility removal locations and areas with asbestos	D.Horvath	Completed

Sustainability Agenda:

7.5

Project Schedule	Date	183N INVEST Schedule
Design (began June 2021)	July 2021	• Populate supporting documentation column in preliminary scorecard for 'YES' criteria • Address D-B action items from the Pre-scoring Workshop
	August 2021	• Discipline coordination to finalize the remaining 'maybes' and anticipated rating level (will schedule additional coordination meetings as-needed) • Continue to populate supporting documentation column in preliminary scorecard
	September 2021	• Finalize supporting documentation list in preliminary scorecard (and "User Workspace") • Start collecting supporting documentation files in shared PW folders
	October 2021	• Continue to collect (and format, as needed) supporting documentation files
	November 2021	• Upload supporting documentation files to INVEST User Workspace • Prepare Sustainability Progress Report, including QC
	December 2021	• Semi-annual meeting with client • Submit Sustainability Progress Report
Begin Construction	April 2022	TBD
Finish Design	November 2022	TBD
Expected Substantial Completion Date	June 2025	TBD
Construction Expected Final Acceptance Date	October 2025	TBD

Sustainability Action Items		Responsible Party	Due
S7.01			

CENTRAL TEXAS REGIONAL MOBILITY AUTHORITY
183 NORTH MOBILITY PROJECT

ALTERNATIVE WATER QUALITY POND LOCATIONS PRESENTATION

October 19, 2023

GREAT HILLS CONSTRUCTORS

Proposal

- REPLACE VAULT WQ PONDS WITH JELLYFISH TREATMENT SYSTEMS
  - BASIN A-VAULTS 1A, 1B, 1C
  - BASIN B-VAULTS 2A, 2B, 2C, 2D2
- TREATMENT WILL EXCEED CURRENT PROPOSED TSS REMOVAL CAPACITY

NOTE: Vault 2D1 not included in this proposed alternative due to the Batch Detention requirement at this location.

GREAT HILLS CONSTRUCTORS

Justification

- MEETS OR EXCEES REGULATORY REQUIREMENTS
- MINIMIZES HIGH RISK CONSTRUCTION AROUND EXISTING PROJECT FEATURES
  - PROTECTS SHORT- AND LONG-TERM INTEGRITY OF EXISTING MSE WALLS
  - MINIMIZES RE-USE AND RETROFIT OF AGED CONCRETE VAULTS
- IMPROVES CONSTRUCTABILITY
  - MORE CONVENTIONAL TEMPORARY GROUND/TRENCH SUPPORT
  - ELIMINATES TIE-BACKS UNDER/AROUND EXISTING FEATURES
- EXPEDITES CONSTRUCTION SCHEDULE FOR THESE FEATURES

GREAT HILLS CONSTRUCTORS

WQ Pond Locations

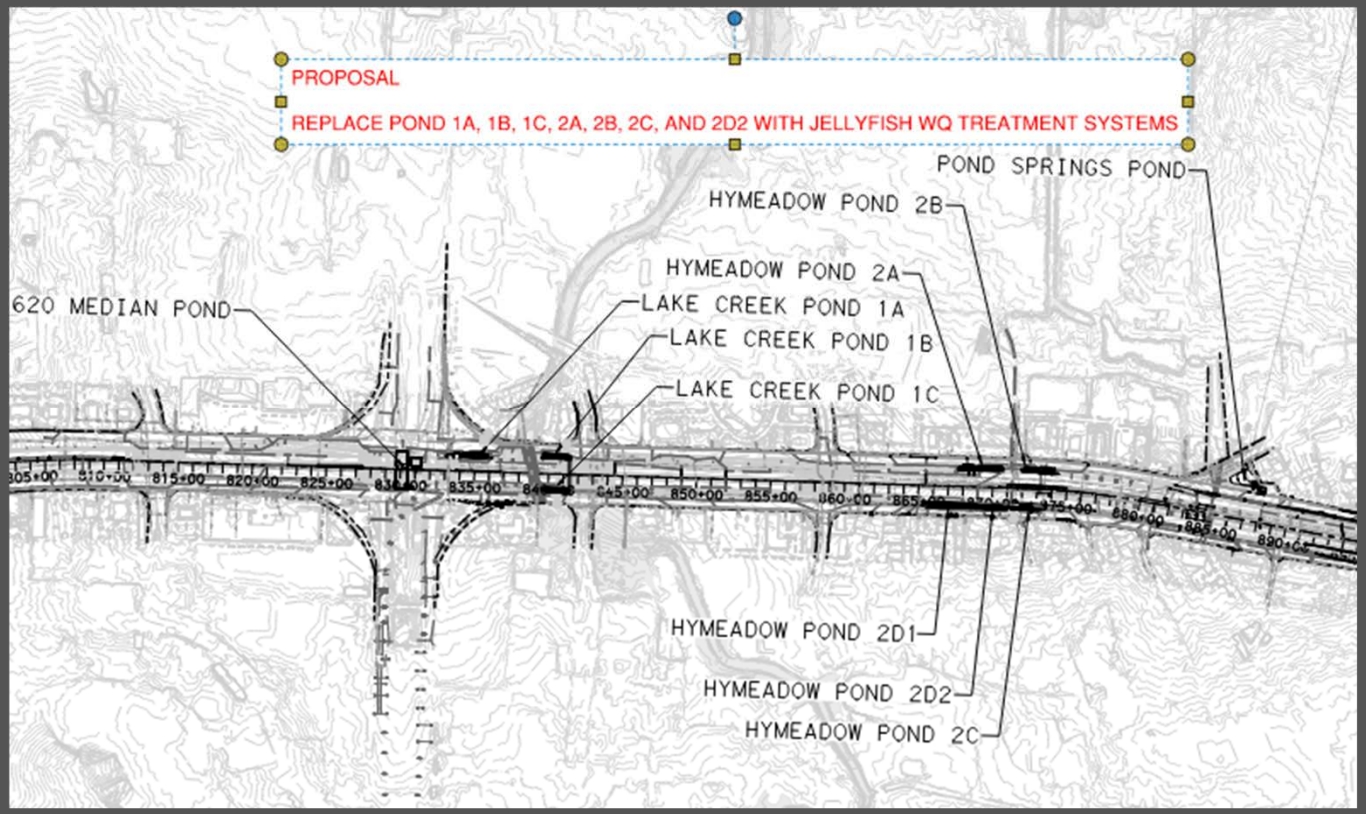

GREAT HILLS CONSTRUCTORS

Basin TCEQ Volume Calcs

- Initial Efficiency of Jellyfish 86 Percent per TCEQ evaluation
- Lm Value Same as Original TCEQ Calculation
- Lr Value Reduced from Original TCEQ Calculation based on TCEQ Efficiency Adjustment
- F=Fraction of Runoff Treatment=0.90 which is equivalent to 1.1 inch/hour intensity storm

Figure 3-10 Annual TSS Removal as a Function of Overflow Rate

If the wet vault proposed for installations bypasses runoff at a rainfall intensity of less than 1.1 in/hour, then the efficiency calculated below must be reduced to account for less of the runoff being treated. This reduction in efficiency can be determined from Figure 3-11. For instance, if a device is installed that begins to bypass runoff at an intensity of 0.5 inches an hour, then only about 0.75 of the annual runoff will be treated, so the efficiency based on overflow rate must be reduced by 0.75/0.9, where 0.9 equals the fraction of runoff that would be treated if the device was sized for a 1.1 in/hour storm.

FROM TCEQ COMPLYING WITH THE EDWARDS AQUIFER RULES-TECHNICAL GUIDANCE ON BMP'S-WET VAULT GUIDELINES

GREAT HILLS CONSTRUCTORS

BASIN TCEQ Volume Calcs

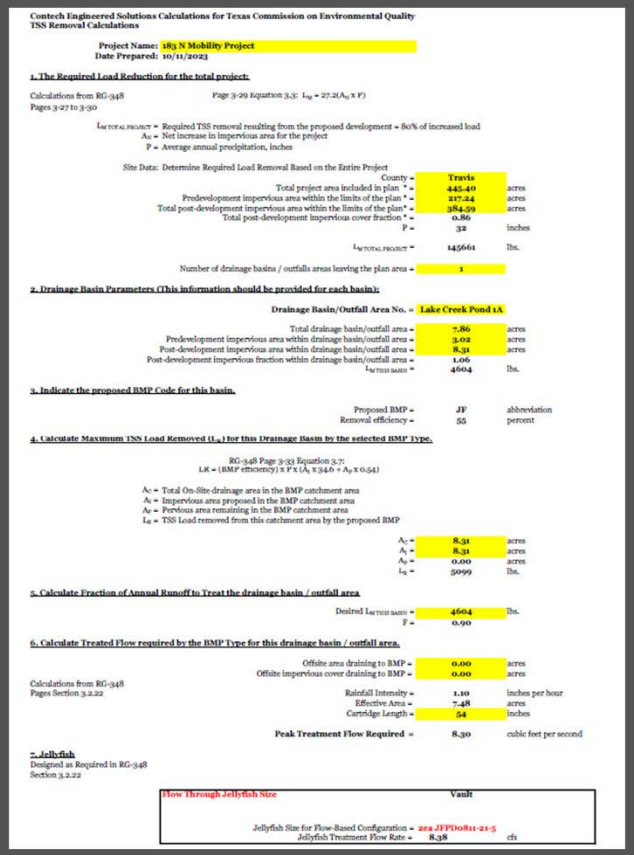

Contech Engineered Solutions Calculations for Texas Commission on Environmental Quality
TSS Removal Calculations

Project Name: 183 N Mobility Project
Date Prepared: 10/11/2023

1. The Required Load Reduction for the total project:

Calculations from RG-348 — Page 3-29 Equation 3.3: $L_M = 27.2(A_N \times P)$
Pages 3-27 to 3-30

$L_{M\ TOTAL\ PROJECT}$ = Required TSS removal resulting from the proposed development = 80% of increased load
A_N = Net increase in impervious area for the project
P = Average annual precipitation, inches

Site Data: Determine Required Load Removal Based on the Entire Project

County =	Travis	
Total project area included in plan * =	445.40	acres
Predevelopment impervious area within the limits of the plan * =	217.24	acres
Total post-development impervious area within the limits of the plan* =	384.59	acres
Total post-development impervious cover fraction * =	0.86	
P =	32	inches
$L_{M\ TOTAL\ PROJECT}$ =	145661	lbs.
Number of drainage basins / outfalls areas leaving the plan area =	1	

2. Drainage Basin Parameters (This information should be provided for each basin):

Drainage Basin/Outfall Area No. = Lake Creek Pond 1A

Total drainage basin/outfall area =	7.86	acres
Predevelopment impervious area within drainage basin/outfall area =	3.02	acres
Post-development impervious area within drainage basin/outfall area =	8.31	acres
Post-development impervious fraction within drainage basin/outfall area =	1.06	
$L_{M\ THIS\ BASIN}$ =	4604	lbs.

3. Indicate the proposed BMP Code for this basin.

Proposed BMP =	JF	abbreviation
Removal efficiency =	55	percent

4. Calculate Maximum TSS Load Removed (L_R) for this Drainage Basin by the selected BMP Type.

RG-348 Page 3-33 Equation 3.7:
LR = (BMP efficiency) x P x (A_I x 34.6 + A_P x 0.54)

A_C = Total On-Site drainage area in the BMP catchment area
A_I = Impervious area proposed in the BMP catchment area
A_P = Pervious area remaining in the BMP catchment area
L_R = TSS Load removed from this catchment area by the proposed BMP

A_C =	8.31	acres
A_I =	8.31	acres
A_P =	0.00	acres
L_R =	5099	lbs.

5. Calculate Fraction of Annual Runoff to Treat the drainage basin / outfall area

Desired $L_{M\ THIS\ BASIN}$ =	4604	lbs.
F =	0.90	

6. Calculate Treated Flow required by the BMP Type for this drainage basin / outfall area.

Offsite area draining to BMP =	0.00	acres
Offsite impervious cover draining to BMP =	0.00	acres
Calculations from RG-348 Pages Section 3.2.22 — Rainfall Intensity =	1.10	inches per hour
Effective Area =	7.48	acres
Cartridge Length =	54	inches
Peak Treatment Flow Required =	8.30	cubic feet per second

7. Jellyfish
Designed as Required in RG-348 Section 3.2.22

Flow Through Jellyfish Size	Vault
Jellyfish Size for Flow-Based Configuration =	2ea JFPDo811-21-5
Jellyfish Treatment Flow Rate =	8.38 cfs

1A

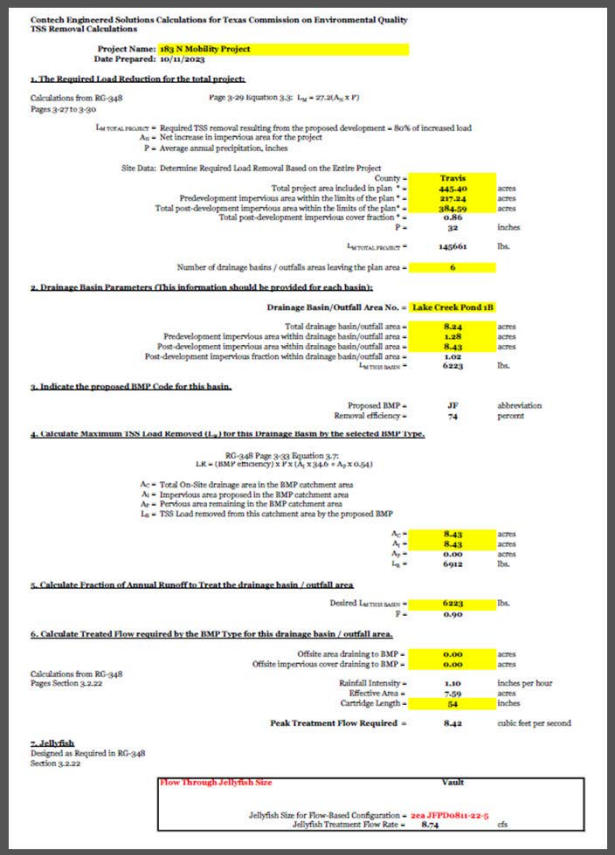

Contech Engineered Solutions Calculations for Texas Commission on Environmental Quality
TSS Removal Calculations

Project Name: 183 N Mobility Project
Date Prepared: 10/11/2023

1. The Required Load Reduction for the total project:

Calculations from RG-348 — Page 3-29 Equation 3.3: $L_M = 27.2(A_N \times P)$
Pages 3-27 to 3-30

$L_{M\ TOTAL\ PROJECT}$ = Required TSS removal resulting from the proposed development = 80% of increased load
A_N = Net increase in impervious area for the project
P = Average annual precipitation, inches

Site Data: Determine Required Load Removal Based on the Entire Project

County =	Travis	
Total project area included in plan * =	445.40	acres
Predevelopment impervious area within the limits of the plan * =	217.24	acres
Total post-development impervious area within the limits of the plan* =	384.59	acres
Total post-development impervious cover fraction * =	0.86	
P =	32	inches
$L_{M\ TOTAL\ PROJECT}$ =	145661	lbs.
Number of drainage basins / outfalls areas leaving the plan area =	6	

2. Drainage Basin Parameters (This information should be provided for each basin):

Drainage Basin/Outfall Area No. = Lake Creek Pond 1B

Total drainage basin/outfall area =	8.24	acres
Predevelopment impervious area within drainage basin/outfall area =	1.28	acres
Post-development impervious area within drainage basin/outfall area =	8.43	acres
Post-development impervious fraction within drainage basin/outfall area =	1.02	
$L_{M\ THIS\ BASIN}$ =	6223	lbs.

3. Indicate the proposed BMP Code for this basin.

Proposed BMP =	JF	abbreviation
Removal efficiency =	74	percent

4. Calculate Maximum TSS Load Removed (L_R) for this Drainage Basin by the selected BMP Type.

RG-348 Page 3-33 Equation 3.7:
LR = (BMP efficiency) x P x (A_I x 34.6 + A_P x 0.54)

A_C = Total On-Site drainage area in the BMP catchment area
A_I = Impervious area proposed in the BMP catchment area
A_P = Pervious area remaining in the BMP catchment area
L_R = TSS Load removed from this catchment area by the proposed BMP

A_C =	8.43	acres
A_I =	8.43	acres
A_P =	0.00	acres
L_R =	6912	lbs.

5. Calculate Fraction of Annual Runoff to Treat the drainage basin / outfall area

Desired $L_{M\ THIS\ BASIN}$ =	6223	lbs.
F =	0.90	

6. Calculate Treated Flow required by the BMP Type for this drainage basin / outfall area.

Offsite area draining to BMP =	0.00	acres
Offsite impervious cover draining to BMP =	0.00	acres
Calculations from RG-348 Pages Section 3.2.22 — Rainfall Intensity =	1.10	inches per hour
Effective Area =	7.59	acres
Cartridge Length =	54	inches
Peak Treatment Flow Required =	8.42	cubic feet per second

7. Jellyfish
Designed as Required in RG-348 Section 3.2.22

Flow Through Jellyfish Size	Vault
Jellyfish Size for Flow-Based Configuration =	2ea JFPDo811-22-5
Jellyfish Treatment Flow Rate =	8.74 cfs

1B

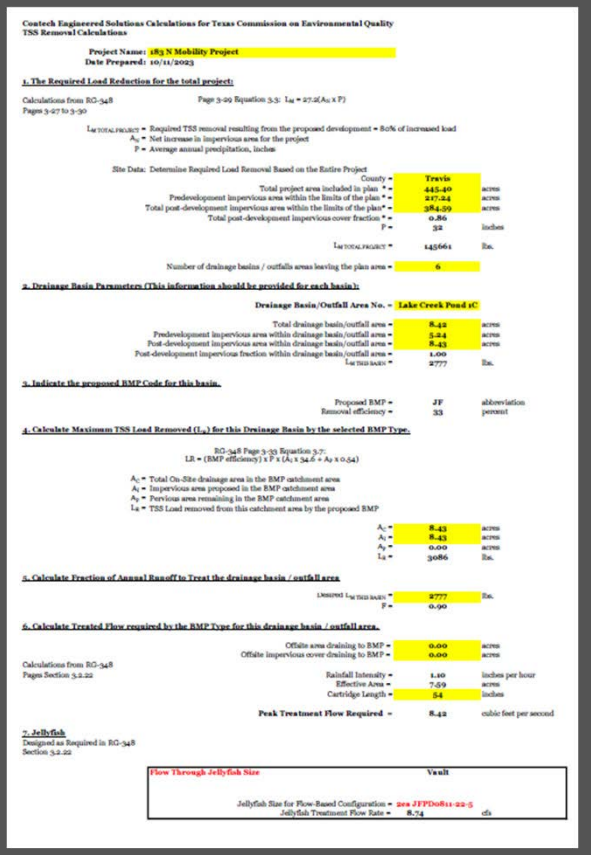

Contech Engineered Solutions Calculations for Texas Commission on Environmental Quality
TSS Removal Calculations

Project Name: 183 N Mobility Project
Date Prepared: 10/11/2023

1. The Required Load Reduction for the total project:

Calculations from RG-348 — Page 3-29 Equation 3.3: $L_M = 27.2(A_N \times P)$
Pages 3-27 to 3-30

$L_{M\ TOTAL\ PROJECT}$ = Required TSS removal resulting from the proposed development = 80% of increased load
A_N = Net increase in impervious area for the project
P = Average annual precipitation, inches

Site Data: Determine Required Load Removal Based on the Entire Project

County =	Travis	
Total project area included in plan * =	445.40	acres
Predevelopment impervious area within the limits of the plan * =	217.24	acres
Total post-development impervious area within the limits of the plan* =	384.59	acres
Total post-development impervious cover fraction * =	0.86	
P =	32	inches
$L_{M\ TOTAL\ PROJECT}$ =	145661	lbs.
Number of drainage basins / outfalls areas leaving the plan area =	6	

2. Drainage Basin Parameters (This information should be provided for each basin):

Drainage Basin/Outfall Area No. = Lake Creek Pond 1C

Total drainage basin/outfall area =	8.42	acres
Predevelopment impervious area within drainage basin/outfall area =	5.24	acres
Post-development impervious area within drainage basin/outfall area =	8.43	acres
Post-development impervious fraction within drainage basin/outfall area =	1.00	
$L_{M\ THIS\ BASIN}$ =	2777	lbs.

3. Indicate the proposed BMP Code for this basin.

Proposed BMP =	JF	abbreviation
Removal efficiency =	33	percent

4. Calculate Maximum TSS Load Removed (L_R) for this Drainage Basin by the selected BMP Type.

RG-348 Page 3-33 Equation 3.7:
LR = (BMP efficiency) x P x (A_I x 34.6 + A_P x 0.54)

A_C = Total On-Site drainage area in the BMP catchment area
A_I = Impervious area proposed in the BMP catchment area
A_P = Pervious area remaining in the BMP catchment area
L_R = TSS Load removed from this catchment area by the proposed BMP

A_C =	8.43	acres
A_I =	8.43	acres
A_P =	0.00	acres
L_R =	3086	lbs.

5. Calculate Fraction of Annual Runoff to Treat the drainage basin / outfall area

Desired $L_{M\ THIS\ BASIN}$ =	2777	lbs.
F =	0.90	

6. Calculate Treated Flow required by the BMP Type for this drainage basin / outfall area.

Offsite area draining to BMP =	0.00	acres
Offsite impervious cover draining to BMP =	0.00	acres
Calculations from RG-348 Pages Section 3.2.22 — Rainfall Intensity =	1.10	inches per hour
Effective Area =	7.59	acres
Cartridge Length =	54	inches
Peak Treatment Flow Required =	8.42	cubic feet per second

7. Jellyfish
Designed as Required in RG-348 Section 3.2.22

Flow Through Jellyfish Size	Vault
Jellyfish Size for Flow-Based Configuration =	2ea JFPDo811-22-5
Jellyfish Treatment Flow Rate =	8.74 cfs

1C

GREAT HILLS CONSTRUCTORS

BASIN TCEQ Volume Calcs

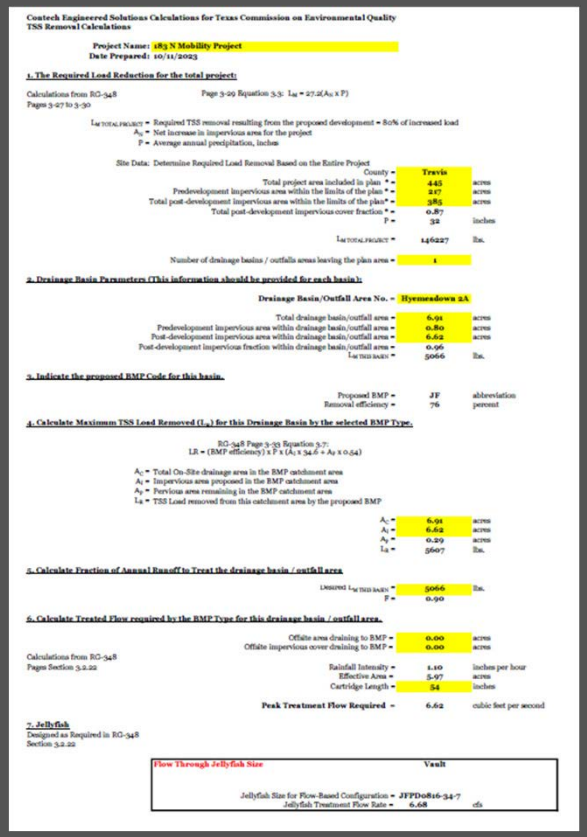

Contech Engineered Solutions Calculations for Texas Commission on Environmental Quality
TSS Removal Calculations

Project Name: 183 N Mobility Project
Date Prepared: 10/11/2023

1. The Required Load Reduction for the total project:

Calculations from RG-348 Pages 3-27 to 3-30 — Page 3-29 Equation 3.3: $L_M = 27.2(A_N \times P)$

$L_{M\,TOTAL\,PROJECT}$ = Required TSS removal resulting from the proposed development = 80% of increased load
A_N = Net increase in impervious area for the project
P = Average annual precipitation, inches

Site Data: Determine Required Load Removal Based on the Entire Project

County =	Travis	
Total project area included in plan * =	445	acres
Predevelopment impervious area within the limits of the plan * =	217	acres
Total post-development impervious area within the limits of the plan* =	385	acres
Total post-development impervious cover fraction * =	0.87	
P =	32	inches
$L_{M\,TOTAL\,PROJECT}$ =	146227	lbs.
Number of drainage basins / outfalls areas leaving the plan area =	1	

2. Drainage Basin Parameters (This information should be provided for each basin):

Drainage Basin/Outfall Area No. = Hymeadown 2A

Total drainage basin/outfall area =	6.91	acres
Predevelopment impervious area within drainage basin/outfall area =	0.80	acres
Post-development impervious area within drainage basin/outfall area =	6.62	acres
Post-development impervious fraction within drainage basin/outfall area =	0.96	
$L_{M\,THIS\,BASIN}$ =	5066	lbs.

3. Indicate the proposed BMP Code for this basin.

Proposed BMP =	JF	abbreviation
Removal efficiency =	76	percent

4. Calculate Maximum TSS Load Removed (L_R) for this Drainage Basin by the selected BMP Type.

RG-348 Page 3-33 Equation 3.7:
LR = (BMP efficiency) x P x (A_I x 34.6 + A_P x 0.54)

A_C = Total On-Site drainage area in the BMP catchment area
A_I = Impervious area proposed in the BMP catchment area
A_P = Pervious area remaining in the BMP catchment area
L_R = TSS Load removed from this catchment area by the proposed BMP

A_C =	6.91	acres
A_I =	6.62	acres
A_P =	0.29	acres
L_R =	5607	lbs.

5. Calculate Fraction of Annual Runoff to Treat the drainage basin / outfall area

Desired $L_{M\,THIS\,BASIN}$ =	5066	lbs.
P =	0.90	

6. Calculate Treated Flow required by the BMP Type for this drainage basin / outfall area.

Offsite area draining to BMP =	0.00	acres
Offsite impervious cover draining to BMP =	0.00	acres
Calculations from RG-348 Pages Section 3.2.22		
Rainfall Intensity =	1.10	inches per hour
Effective Area =	5.97	acres
Cartridge Length =	54	inches
Peak Treatment Flow Required =	6.62	cubic feet per second

7. Jellyfish
Designed as Required in RG-348 Section 3.2.22

Flow Through Jellyfish Size	Vault	
Jellyfish Size for Flow-Based Configuration =	JFPD0816-34-7	
Jellyfish Treatment Flow Rate =	6.68	cfs

2A

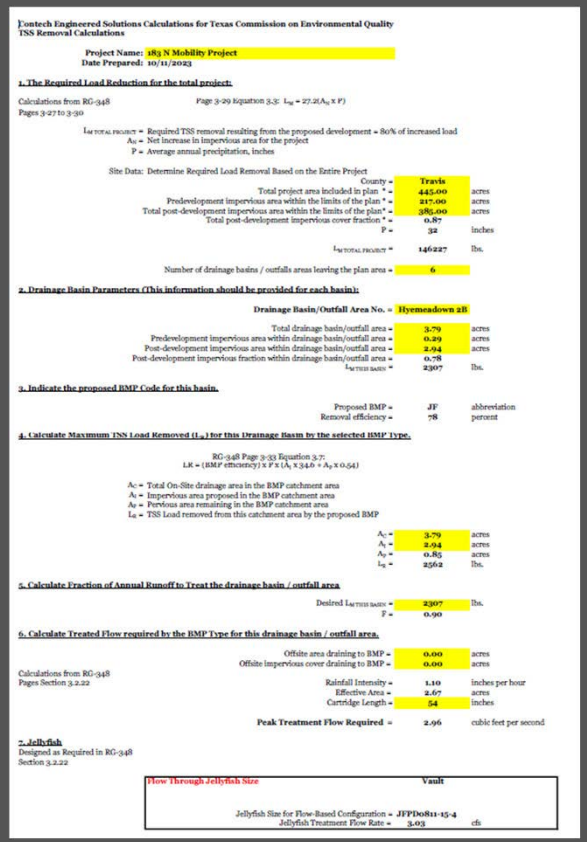

Contech Engineered Solutions Calculations for Texas Commission on Environmental Quality
TSS Removal Calculations

Project Name: 183 N Mobility Project
Date Prepared: 10/11/2023

1. The Required Load Reduction for the total project:

Calculations from RG-348 Pages 3-27 to 3-30 — Page 3-29 Equation 3.3: $L_M = 27.2(A_N \times P)$

$L_{M\,TOTAL\,PROJECT}$ = Required TSS removal resulting from the proposed development = 80% of increased load
A_N = Net increase in impervious area for the project
P = Average annual precipitation, inches

Site Data: Determine Required Load Removal Based on the Entire Project

County =	Travis	
Total project area included in plan * =	445.00	acres
Predevelopment impervious area within the limits of the plan * =	217.00	acres
Total post-development impervious area within the limits of the plan* =	385.00	acres
Total post-development impervious cover fraction * =	0.87	
P =	32	inches
$L_{M\,TOTAL\,PROJECT}$ =	146227	lbs.
Number of drainage basins / outfalls areas leaving the plan area =	6	

2. Drainage Basin Parameters (This information should be provided for each basin):

Drainage Basin/Outfall Area No. = Hymeadown 2B

Total drainage basin/outfall area =	3.79	acres
Predevelopment impervious area within drainage basin/outfall area =	0.29	acres
Post-development impervious area within drainage basin/outfall area =	2.94	acres
Post-development impervious fraction within drainage basin/outfall area =	0.78	
$L_{M\,THIS\,BASIN}$ =	2307	lbs.

3. Indicate the proposed BMP Code for this basin.

Proposed BMP =	JF	abbreviation
Removal efficiency =	78	percent

4. Calculate Maximum TSS Load Removed (L_R) for this Drainage Basin by the selected BMP Type.

RG-348 Page 3-33 Equation 3.7:
LR = (BMP efficiency) x P x (A_I x 34.6 + A_P x 0.54)

A_C = Total On-Site drainage area in the BMP catchment area
A_I = Impervious area proposed in the BMP catchment area
A_P = Pervious area remaining in the BMP catchment area
L_R = TSS Load removed from this catchment area by the proposed BMP

A_C =	3.79	acres
A_I =	2.94	acres
A_P =	0.85	acres
L_R =	2562	lbs.

5. Calculate Fraction of Annual Runoff to Treat the drainage basin / outfall area

Desired $L_{M\,THIS\,BASIN}$ =	2307	lbs.
P =	0.90	

6. Calculate Treated Flow required by the BMP Type for this drainage basin / outfall area.

Offsite area draining to BMP =	0.00	acres
Offsite impervious cover draining to BMP =	0.00	acres
Calculations from RG-348 Pages Section 3.2.22		
Rainfall Intensity =	1.10	inches per hour
Effective Area =	2.67	acres
Cartridge Length =	54	inches
Peak Treatment Flow Required =	2.96	cubic feet per second

7. Jellyfish
Designed as Required in RG-348 Section 3.2.22

Flow Through Jellyfish Size	Vault	
Jellyfish Size for Flow-Based Configuration =	JFPD0811-15-4	
Jellyfish Treatment Flow Rate =	3.03	cfs

2B

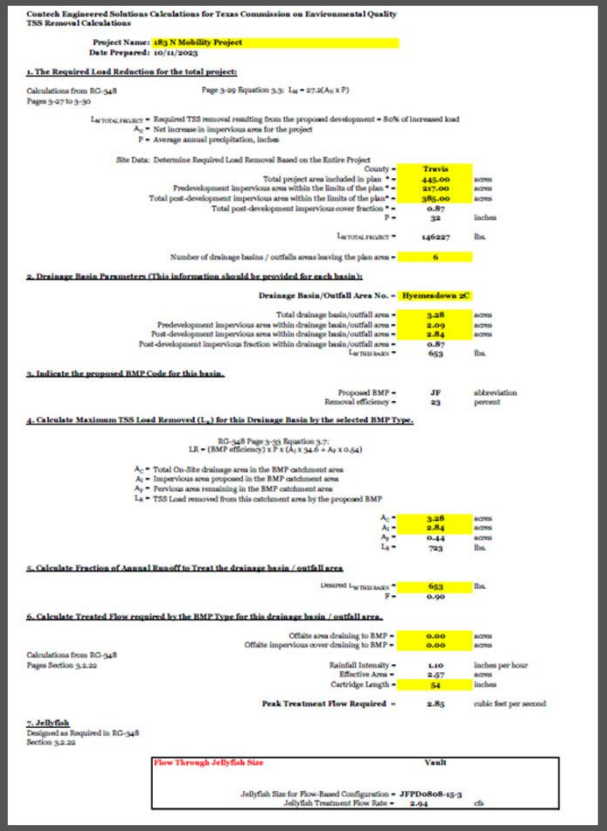

Contech Engineered Solutions Calculations for Texas Commission on Environmental Quality
TSS Removal Calculations

Project Name: 183 N Mobility Project
Date Prepared: 10/11/2023

1. The Required Load Reduction for the total project:

Calculations from RG-348 Pages 3-27 to 3-30 — Page 3-29 Equation 3.3: $L_M = 27.2(A_N \times P)$

$L_{M\,TOTAL\,PROJECT}$ = Required TSS removal resulting from the proposed development = 80% of increased load
A_N = Net increase in impervious area for the project
P = Average annual precipitation, inches

Site Data: Determine Required Load Removal Based on the Entire Project

County =	Travis	
Total project area included in plan * =	445.00	acres
Predevelopment impervious area within the limits of the plan * =	217.00	acres
Total post-development impervious area within the limits of the plan* =	385.00	acres
Total post-development impervious cover fraction * =	0.87	
P =	32	inches
$L_{M\,TOTAL\,PROJECT}$ =	146227	lbs.
Number of drainage basins / outfalls areas leaving the plan area =	6	

2. Drainage Basin Parameters (This information should be provided for each basin):

Drainage Basin/Outfall Area No. = Hymeadown 2C

Total drainage basin/outfall area =	3.28	acres
Predevelopment impervious area within drainage basin/outfall area =	2.09	acres
Post-development impervious area within drainage basin/outfall area =	2.84	acres
Post-development impervious fraction within drainage basin/outfall area =	0.87	
$L_{M\,THIS\,BASIN}$ =	653	lbs.

3. Indicate the proposed BMP Code for this basin.

Proposed BMP =	JF	abbreviation
Removal efficiency =	23	percent

4. Calculate Maximum TSS Load Removed (L_R) for this Drainage Basin by the selected BMP Type.

RG-348 Page 3-33 Equation 3.7:
LR = (BMP efficiency) x P x (A_I x 34.6 + A_P x 0.54)

A_C = Total On-Site drainage area in the BMP catchment area
A_I = Impervious area proposed in the BMP catchment area
A_P = Pervious area remaining in the BMP catchment area
L_R = TSS Load removed from this catchment area by the proposed BMP

A_C =	3.28	acres
A_I =	2.84	acres
A_P =	0.44	acres
L_R =	723	lbs.

5. Calculate Fraction of Annual Runoff to Treat the drainage basin / outfall area

Desired $L_{M\,THIS\,BASIN}$ =	653	lbs.
P =	0.90	

6. Calculate Treated Flow required by the BMP Type for this drainage basin / outfall area.

Offsite area draining to BMP =	0.00	acres
Offsite impervious cover draining to BMP =	0.00	acres
Calculations from RG-348 Pages Section 3.2.22		
Rainfall Intensity =	1.10	inches per hour
Effective Area =	2.57	acres
Cartridge Length =	54	inches
Peak Treatment Flow Required =	2.85	cubic feet per second

7. Jellyfish
Designed as Required in RG-348 Section 3.2.22

Flow Through Jellyfish Size	Vault	
Jellyfish Size for Flow-Based Configuration =	JFPD0808-15-3	
Jellyfish Treatment Flow Rate =	2.94	cfs

2C

GREAT HILLS CONSTRUCTORS

BASIN TCEQ Volume Calcs

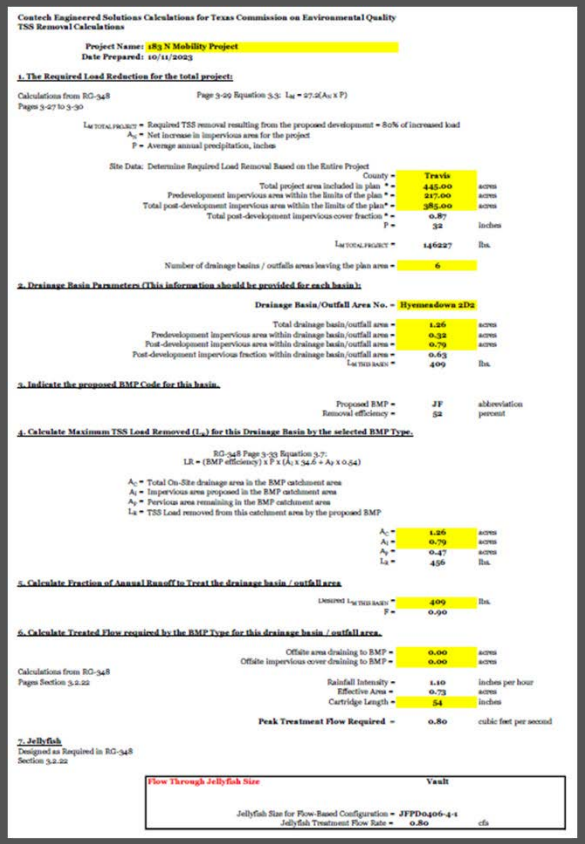

Contech Engineered Solutions Calculations for Texas Commission on Environmental Quality
TSS Removal Calculations

Project Name: 183 N Mobility Project
Date Prepared: 10/11/2023

1. The Required Load Reduction for the total project:

Calculations from RG-348 — Page 3-29 Equation 3.3: $L_M = 27.2(A_N \times P)$
Pages 3-27 to 3-30

$L_{M\ TOTAL\ PROJECT}$ = Required TSS removal resulting from the proposed development = 80% of increased load
A_N = Net increase in impervious area for the project
P = Average annual precipitation, inches

Site Data: Determine Required Load Removal Based on the Entire Project

County =	Travis	
Total project area included in plan * =	445.00	acres
Predevelopment impervious area within the limits of the plan * =	227.00	acres
Total post-development impervious area within the limits of the plan* =	385.00	acres
Total post-development impervious cover fraction * =	0.87	
P =	32	inches
$L_{M\ TOTAL\ PROJECT}$ =	14627	lbs.
Number of drainage basins / outfalls areas leaving the plan area =	6	

2. Drainage Basin Parameters (This information should be provided for each basin):

Drainage Basin/Outfall Area No. = Hyemeadown 2D2

Total drainage basin/outfall area =	1.26	acres
Predevelopment impervious area within drainage basin/outfall area =	0.32	acres
Post-development impervious area within drainage basin/outfall area =	0.79	acres
Post-development impervious fraction within drainage basin/outfall area =	0.63	
$L_{M\ THIS\ BASIN}$ =	409	lbs.

3. Indicate the proposed BMP Code for this basin.

Proposed BMP =	JF	abbreviation
Removal efficiency =	52	percent

4. Calculate Maximum TSS Load Removed (L_R) for this Drainage Basin by the selected BMP Type.

RG-348 Page 3-33 Equation 3.7:
LR = (BMP efficiency) x P x (A_C x 34.6 + A_P x 0.54)

A_C = Total On-Site drainage area in the BMP catchment area
A_I = Impervious area proposed in the BMP catchment area
A_P = Pervious area remaining in the BMP catchment area
L_R = TSS Load removed from this catchment area by the proposed BMP

A_C =	1.26	acres
A_I =	0.79	acres
A_P =	0.47	acres
L_R =	456	lbs.

5. Calculate Fraction of Annual Runoff to Treat the drainage basin / outfall area

Desired $L_{M\ THIS\ BASIN}$ =	409	lbs.
F =	0.90	

6. Calculate Treated Flow required by the BMP Type for this drainage basin / outfall area.

Offsite area draining to BMP =	0.00	acres
Offsite impervious cover draining to BMP =	0.00	acres
Rainfall Intensity =	1.10	inches per hour
Effective Area =	0.73	acres
Cartridge Length =	54	inches
Peak Treatment Flow Required =	0.80	cubic feet per second

Calculations from RG-348
Pages Section 3.2.22

7. Jellyfish
Designed as Required in RG-348
Section 3.2.22

Flow Through Jellyfish Size	Vault	
Jellyfish Size for Flow-Based Configuration =	JFPD0406-4-1	
Jellyfish Treatment Flow Rate =	0.80	cfs

GREAT HILLS CONSTRUCTORS

Basin TCEQ Load Removal Calcs

- USE OF JELLYFISH WQ TREATMENT SYSTEMS RESULTS IN ADDITIONAL ANNUAL TSS LOAD REMOVAL OF 2516 LBS COMPARED WITH THE OPEN VAULT WQ TREATMENT SYSTEMS

TSS Load Removal						
Basin	WQ Structure ID	HEC-HMS Model ID	TCEQ TSS Load Removal Required (lbs)	TCEQ TSS Load Removal Provided-Vaults (lbs)	TCEQ TSS Load Removal Provided-Jellyfish (lbs)	Difference
A	620 Median Pond[1,2]	LAK_050R2	14,858	20,480	20,480	0
A	Lake Creek 1A	LAKT_010R	4,604	3,800	4,604	804
A	Lake Creek 1B	LAK_070R	6,223	3,940	6,223	2,283
A	Lake Creek 1C	LAK_060R_2	2,777	3,520	2,777	-743
	Subtotal Basin A		**28,462**	**31,740**	**34,084**	**2,344**
B	Hymeadow Pond 2A	LAKT2_2A	5,066	3,970	5,066	1,096
B	Hymeadow Pond 2B	LAKT2_2B	2,307	2,090	2,307	217
B	Hymeadow Pond 2C	LAKT2_2C	653	1,900	653	-1,247
B	Hymeadow Pond 2D1	LAKT2_2D1	1,480	2,290	2,290	0
B	Hymeadow Pond 2D2	LAKT2_2D2	226	300	406	106
	Subtotal Basin B		**9,732**	**10,550**	**10,722**	**172**
C	Pond Springs Pond	LAKT2_010R	12,856	13,860	13,860	0
	Subtotal Basin C		**12,856**	**13,860**	**13,860**	**0**
D	Woods Pond	LAKT3_010R	15,894	23,400	23,400	0
	Subtotal Basin D		**15,894**	**23,400**	**23,400**	**0**
	TOTAL		**66,944**	**79,550**	**82,066**	**2,516**

GREAT HILLS CONSTRUCTORS

Hydraulic Design Requirements

- JELLYFISH CAN TREAT FLOW ONLINE THROUGH THE PIPING SYSTEM, OR DIVERTED FLOW INTO THE JELLYFISH WITH A SPLITTER BOX (BASIN 1A)
- NEW BASIN 1A SPLITTER DESIGN BASED ON DIVERTING FIRST FLUSH FLOW EQUAL OR GREATER THAN PEAK FLOW THAT JELLYFISH UNIT CAN TREAT-USING HY-8.
- HEAD LOSS ACROSS JELLYFISH UNIT 1.5’ + JUNCTION ENTRANCE AND EXIT LOSSES
- JELLYFISH STRUCTURE SIZED BASED ON TCEQ FLOW ENTERED INTO THE JELLYFISH FLOW CAPACITY CHART
- IF FLOW CAPACITY EXCEEDED, PARALLEL UNIT LAYOUT USED

GREAT HILLS CONSTRUCTORS

JELLYFISH VAULT CONFIGURATION FLOW CAPACITY CHART

Jellyfish®

Vault Configuration Flow Capacities

Total # Cartridges	# Hi-Flo	# DD	MTFR (gpm)	MTFR (cfs)	Peak Diversion Model
2	1	1	120	0.27	JFPD0806-1-1
3	2	1	200	0.45	JFPD0806-2-1
4	3	1	280	0.62	JFPD0806-3-1
5	4	1	360	0.80	JFPD0806-4-1
6	5	1	440	0.98	JFPD0806-5-1
7	5	2	480	1.07	JFPD0806-5-2
8	6	2	560	1.25	JFPD0806-6-2
9	7	2	640	1.43	JFPD0806-7-2
10	8	2	720	1.60	JFPD0806-8-2
11	9	2	800	1.78	JFPD0806-9-2
12	10	2	880	1.96	JFPD0806-10-2
13	10	3	920	2.05	JFPD0808-10-3
14	11	3	1,000	2.23	JFPD0808-11-3
15	12	3	1,080	2.41	JFPD0808-12-3
16	13	3	1,160	2.58	JFPD0808-13-3
17	14	3	1,240	2.76	JFPD0808-14-3
18	15	3	1,320	2.94	JFPD0808-15-3
19	15	4	1,360	3.03	JFPD0811-15-4
20	16	4	1,440	3.21	JFPD0811-16-4
21	17	4	1,520	3.39	JFPD0811-17-4
22	18	4	1,600	3.56	JFPD0811-18-4
23	19	4	1,680	3.74	JFPD0811-19-4
24	20	4	1,760	3.92	JFPD0811-20-4

Total # Cartridges	# Hi-Flo	# DD	MTFR (gpm)	MTFR (cfs)	Peak Diversion Model
25	20	5	1,800	4.01	JFPD0811-20-5
26	21	5	1,880	4.19	JFPD0811-21-5
27	22	5	1,960	4.37	JFPD0811-22-5
28	23	5	2,040	4.55	JFPD0811-23-5
29	24	5	2,120	4.72	JFPD0811-24-5
30	25	5	2,200	4.90	JFPD0811-25-5
31	25	6	2,240	4.99	JFPD0812-25-6
32	26	6	2,320	5.17	JFPD0812-26-6
33	27	6	2,400	5.35	JFPD0812-27-6
34	28	6	2,480	5.53	JFPD0812-28-6
35	29	6	2,560	5.70	JFPD0812-29-6
36	30	6	2,640	5.88	JFPD0812-30-6
37	30	7	2,680	5.97	JFPD0816-30-7
38	31	7	2,760	6.15	JFPD0816-31-7
39	32	7	2,840	6.33	JFPD0816-32-7
40	33	7	2,920	6.51	JFPD0816-33-7
41	34	7	3,000	6.68	JFPD0816-34-7
42	35	7	3,080	6.86	JFPD0816-35-7
43	35	8	3,120	6.95	JFPD0816-35-8
44	36	8	3,200	7.13	JFPD0816-36-8
45	37	8	3,280	7.31	JFPD0816-37-8
46	38	8	3,360	7.49	JFPD0816-38-8
47	39	8	3,440	7.66	JFPD0816-39-8
48	40	8	3,520	7.84	JFPD0816-40-8

Notes:

1. MTFR refers to Maximum Treatment Flow Rate.
2. Flow rates are based on using 54" cartridges. Shorter length cartridge configurations are available. Please inquire with the local Contech representative
3. Smaller and larger systems may be custom designed using design flow rates of 80 gpm for Hi-Flo cartridges and 80 gpm for Draindown (DD) cartridges.
4. Vault naming convention as follows:



GREAT HILLS CONSTRUCTORS

Jellyfish Single Unit Layout

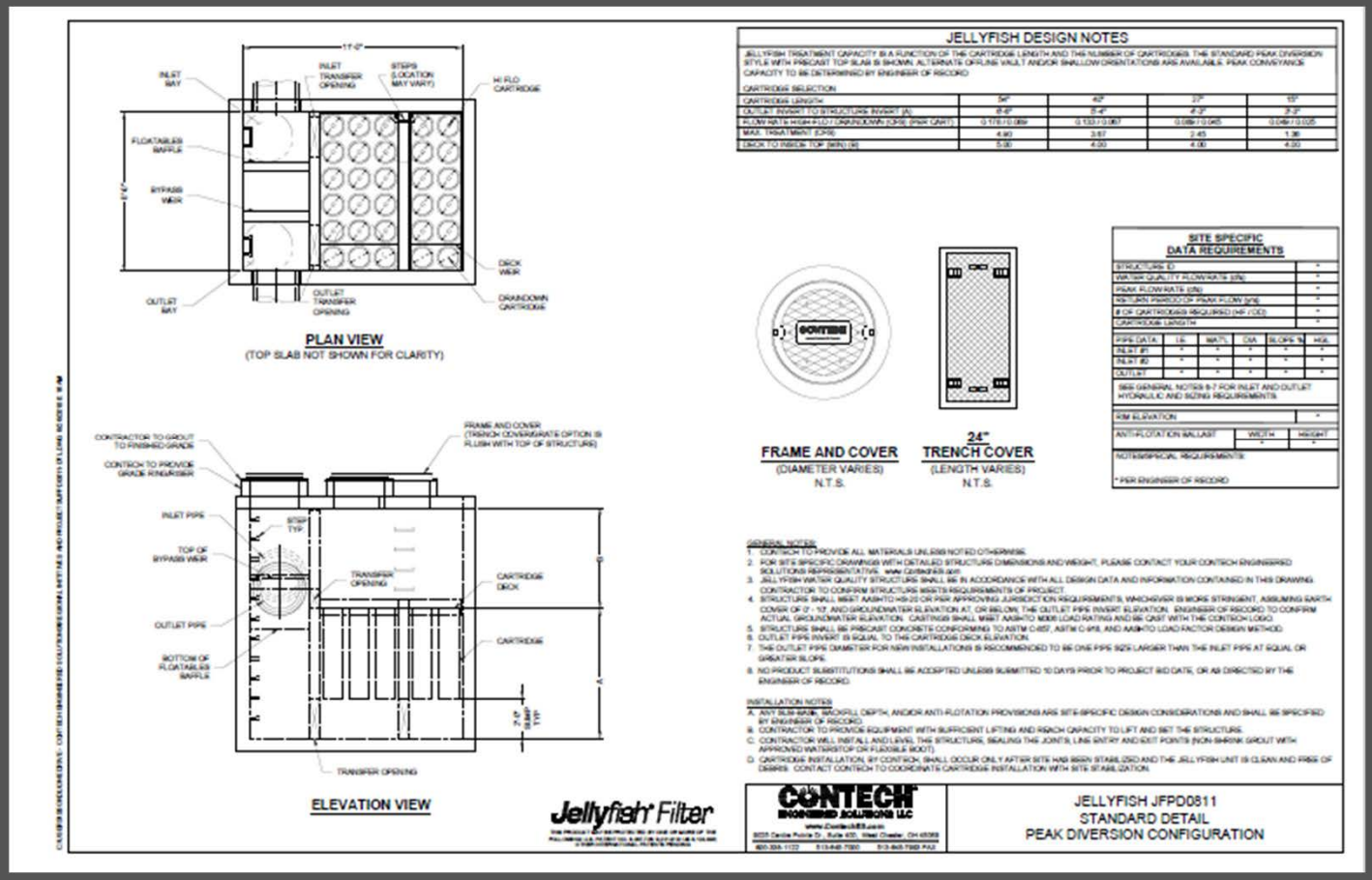

GREAT HILLS CONSTRUCTORS

Jellyfish Parallel Unit Layout

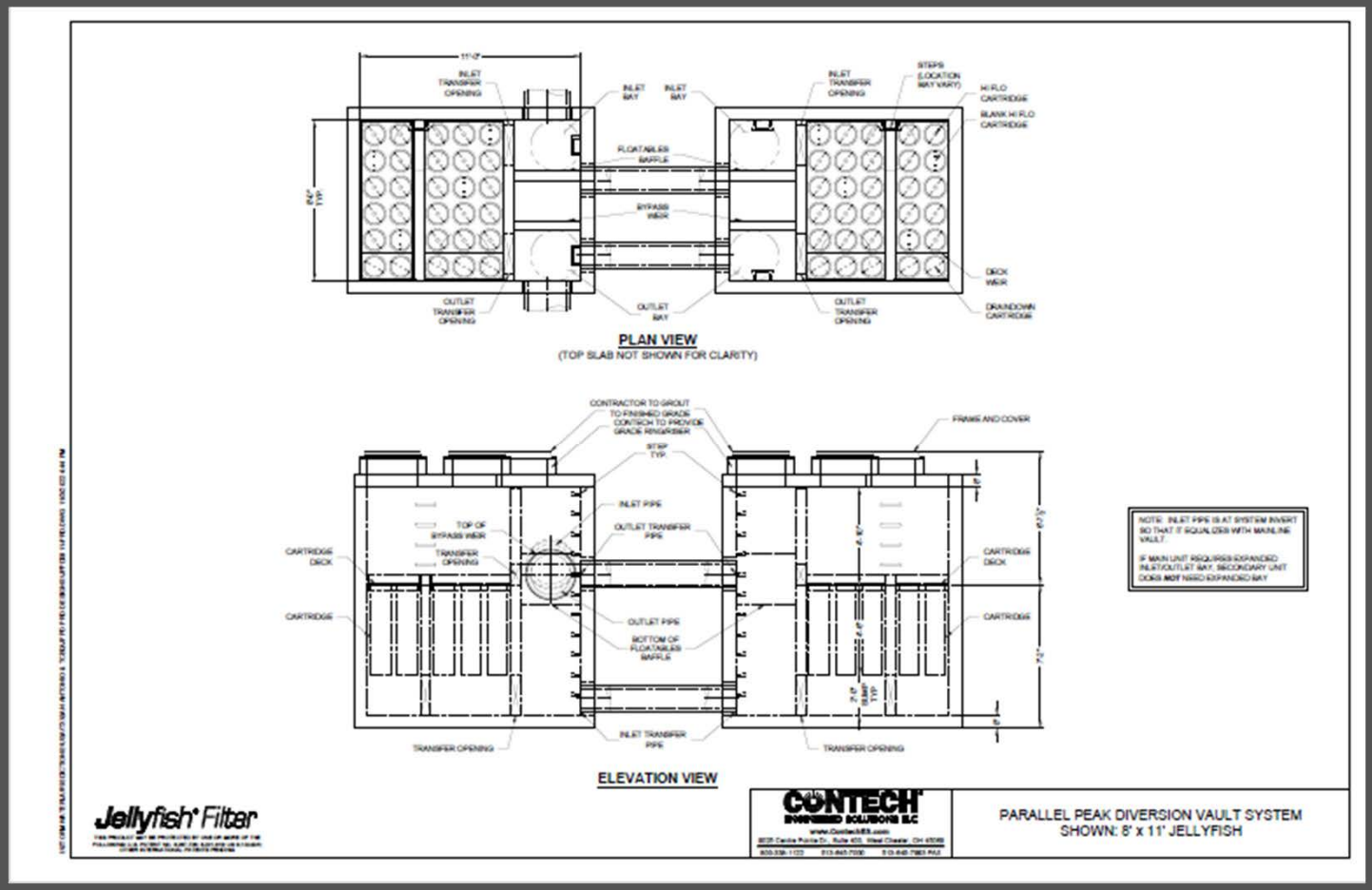

GREAT HILLS CONSTRUCTORS

Proposed Basin 1A Plan Layout

DIVERTED FLOW=
10 CFS FROM THE
DRAINAGE SYSTEM
TO THE JELLYFISH.

MAXIMUM FLOW
TREATED BY JELLYFISH
IS 8.38 CFS

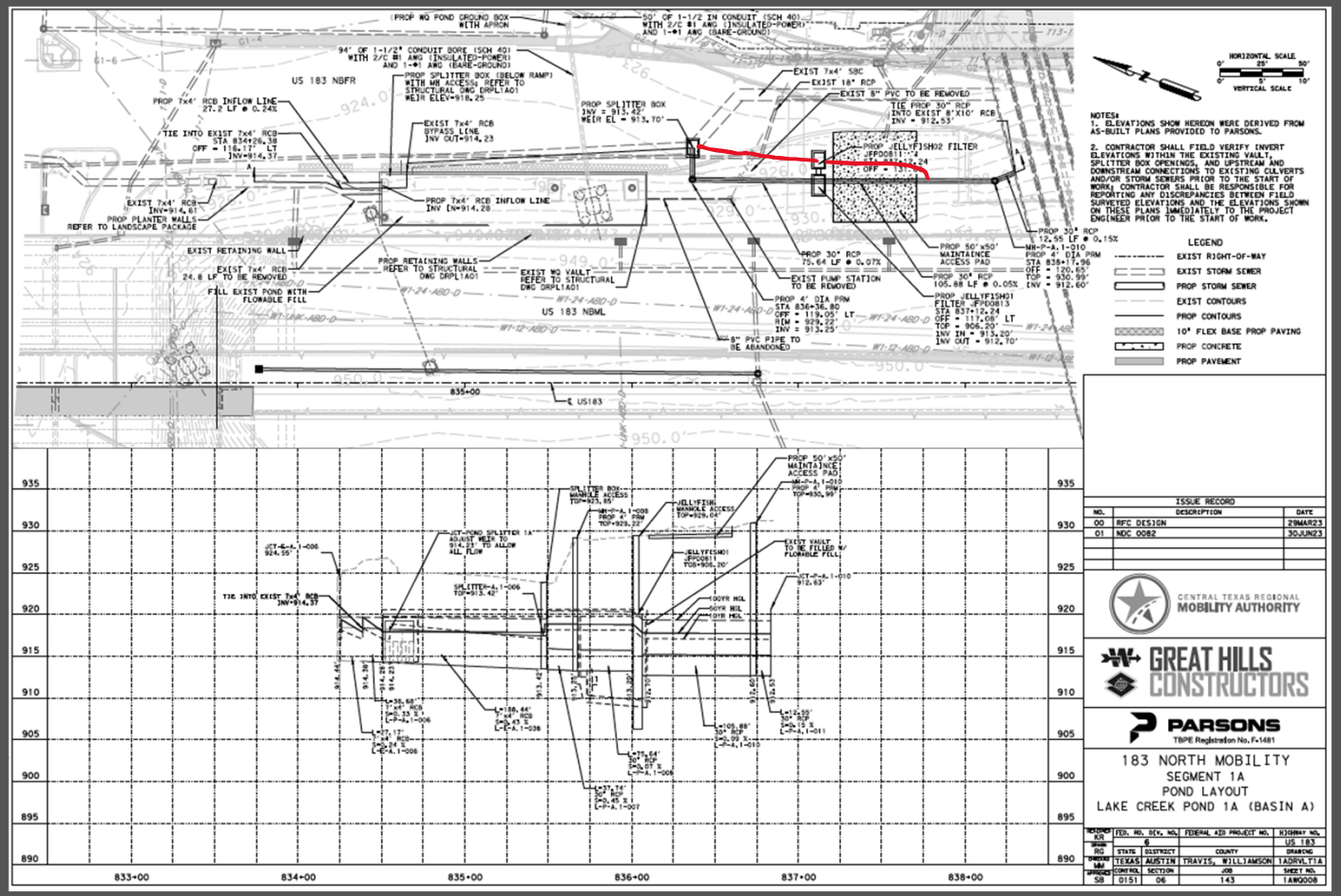

GREAT HILLS CONSTRUCTORS

Proposed Basin 1B Plan Layout

FLOW THROUGH JELLYFISH IN 100 YEAR STORM IS 68.7 CFS.

MAXIMUM FLOW TREATED BY JELLYFISH IS 8.74 CFS

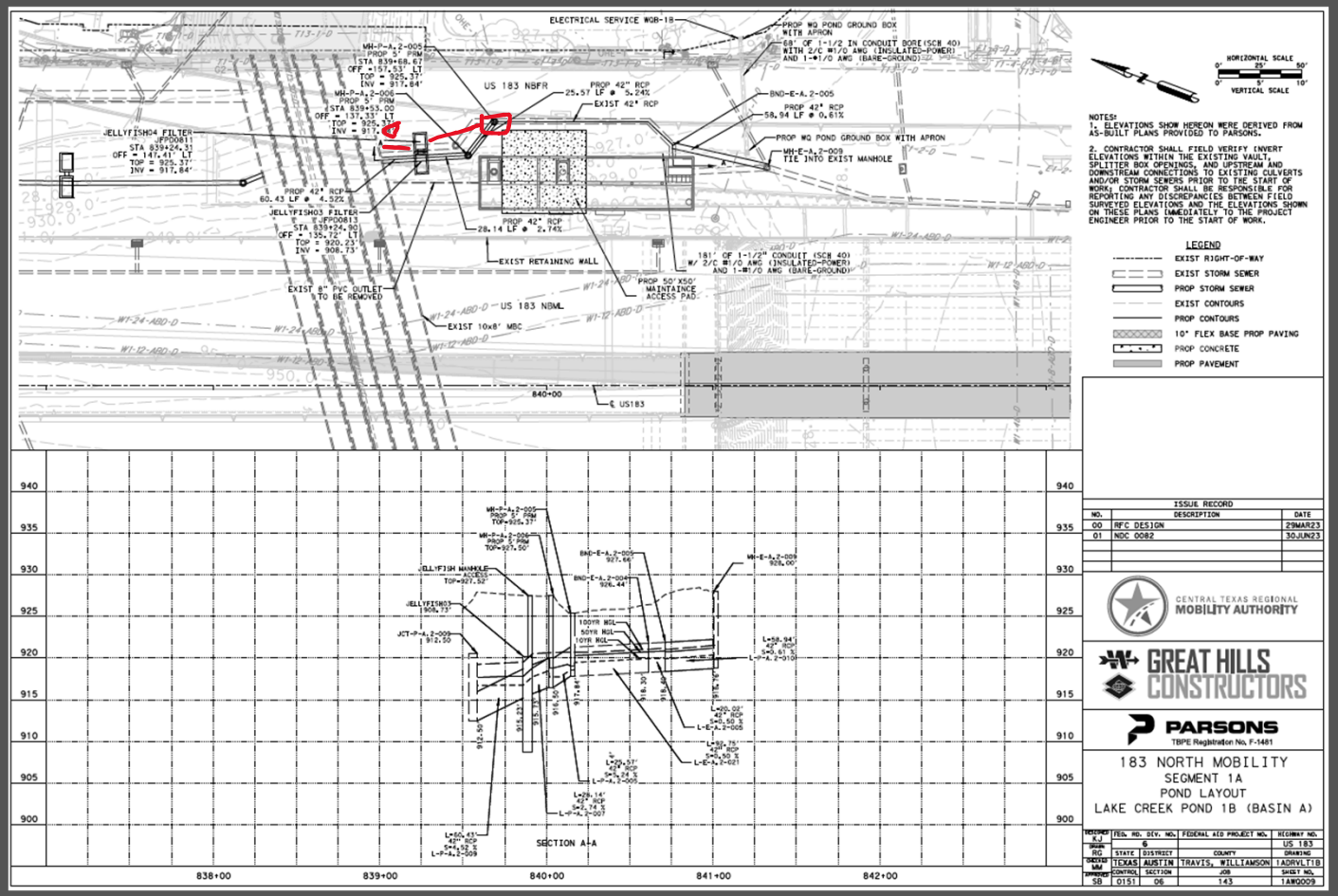

GREAT HILLS CONSTRUCTORS

Proposed Basin 1C Plan Layout

FLOW THROUGH JELLYFISH IN 100 YEAR STORM IS 69.8 CFS.

MAXIMUM FLOW TREATED BY JELLYFISH IS 8.74 CFS

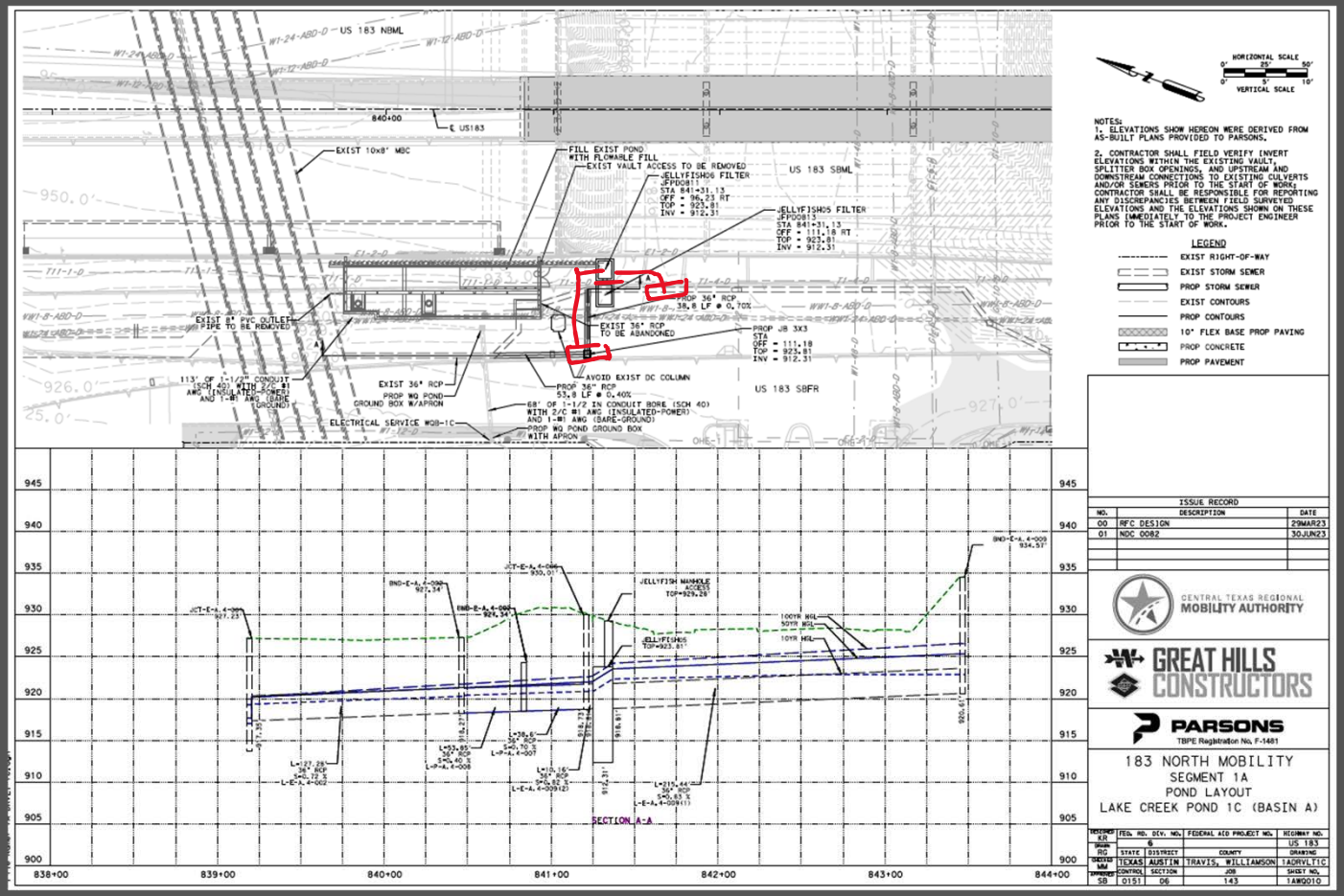

GREAT HILLS CONSTRUCTORS

Proposed Basin 2A Plan Layout

FLOW THROUGH JELLYFISH IN 100 YEAR STORM IS 63.97 CFS.

MAXIMUM FLOW TREATED BY JELLYFISH IS 6.68 CFS

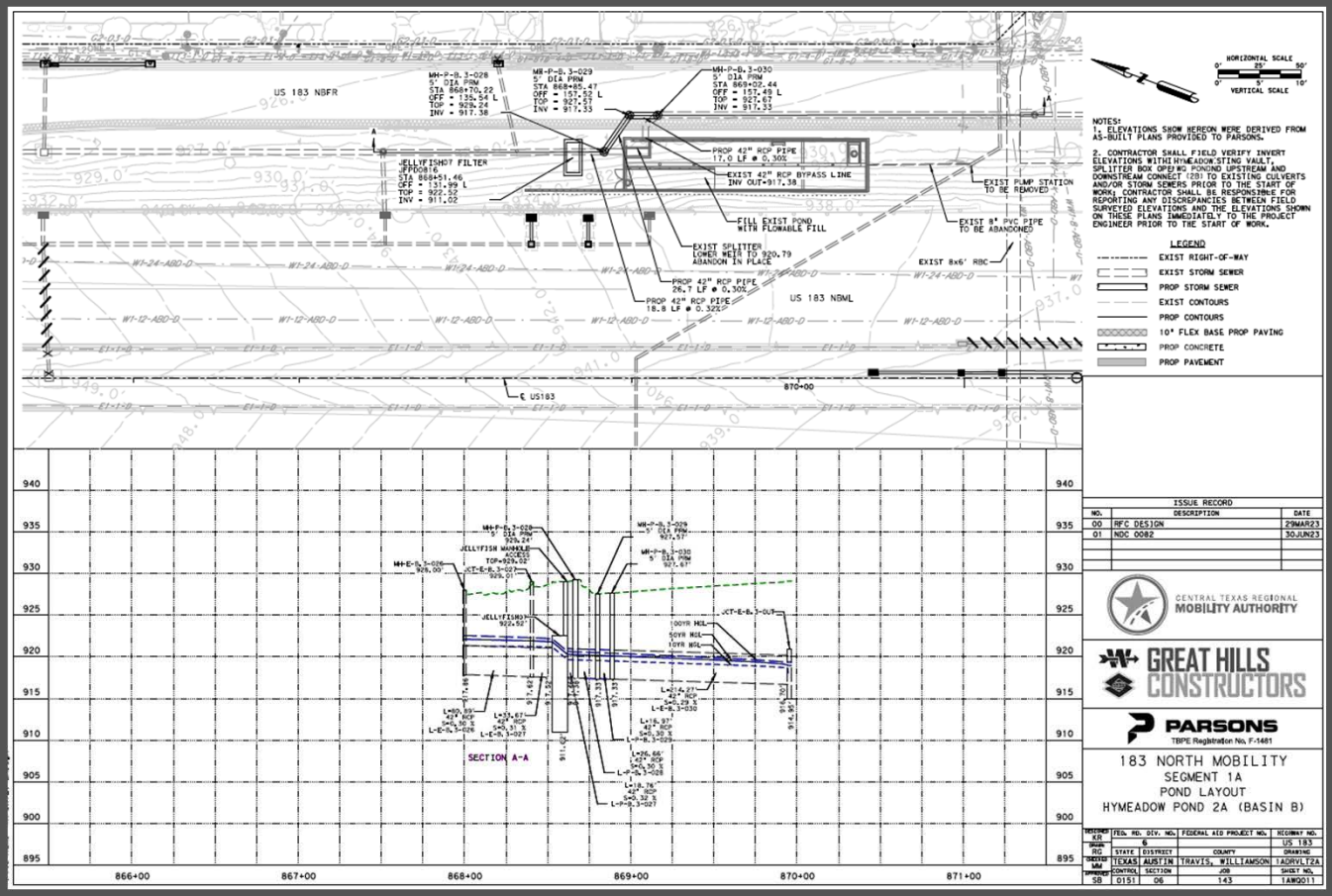

GREAT HILLS CONSTRUCTORS

Proposed Basin 2B Plan Layout

FLOW THROUGH JELLYFISH IN 100 YEAR STORM IS 32.59 CFS.

MAXIMUM FLOW TREATED BY JELLYFISH IS 3.03 CFS

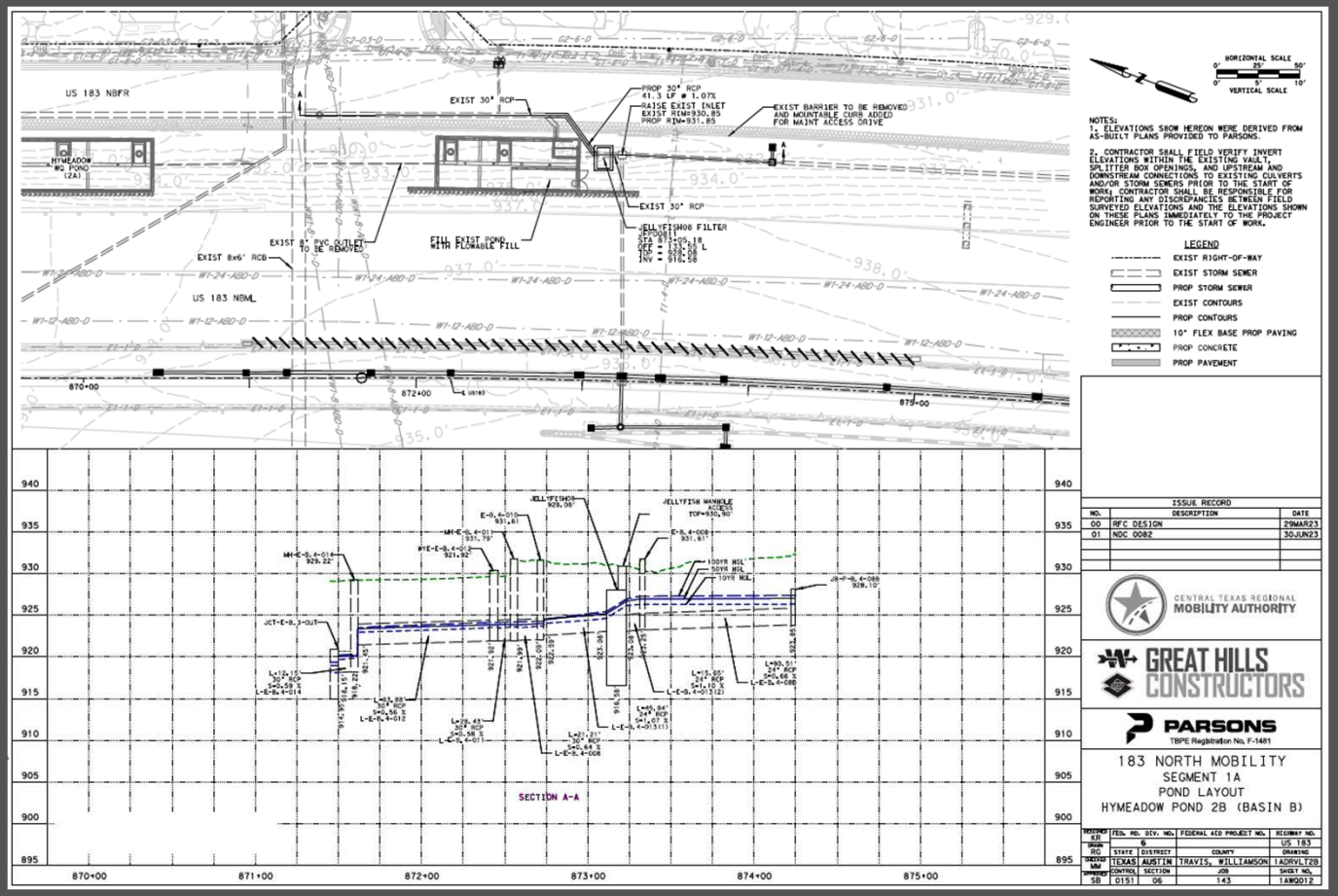

GREAT HILLS CONSTRUCTORS

Proposed Basin 2C Plan Layout

FLOW THROUGH JELLYFISH IN 100 YEAR STORM IS 42.60 CFS.

MAXIMUM FLOW TREATED BY JELLYFISH IS 2.94 CFS

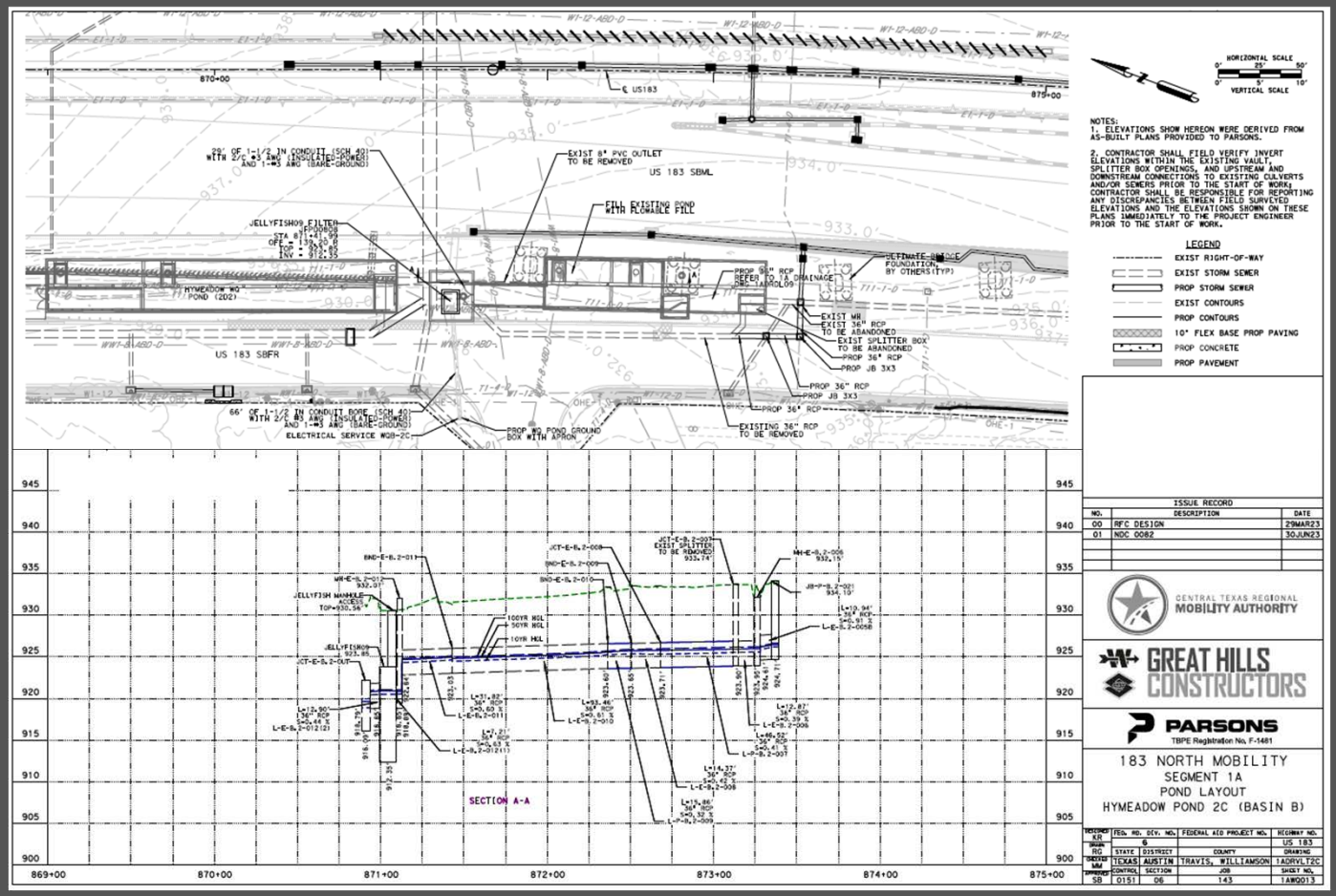

GREAT HILLS CONSTRUCTORS

Proposed Basin 2D-2 Plan Layout

FLOW THROUGH JELLYFISH IN 100 YEAR STORM IS 218.83 CFS.

MAXIMUM FLOW TREATED BY JELLYFISH IS 0.80 CFS

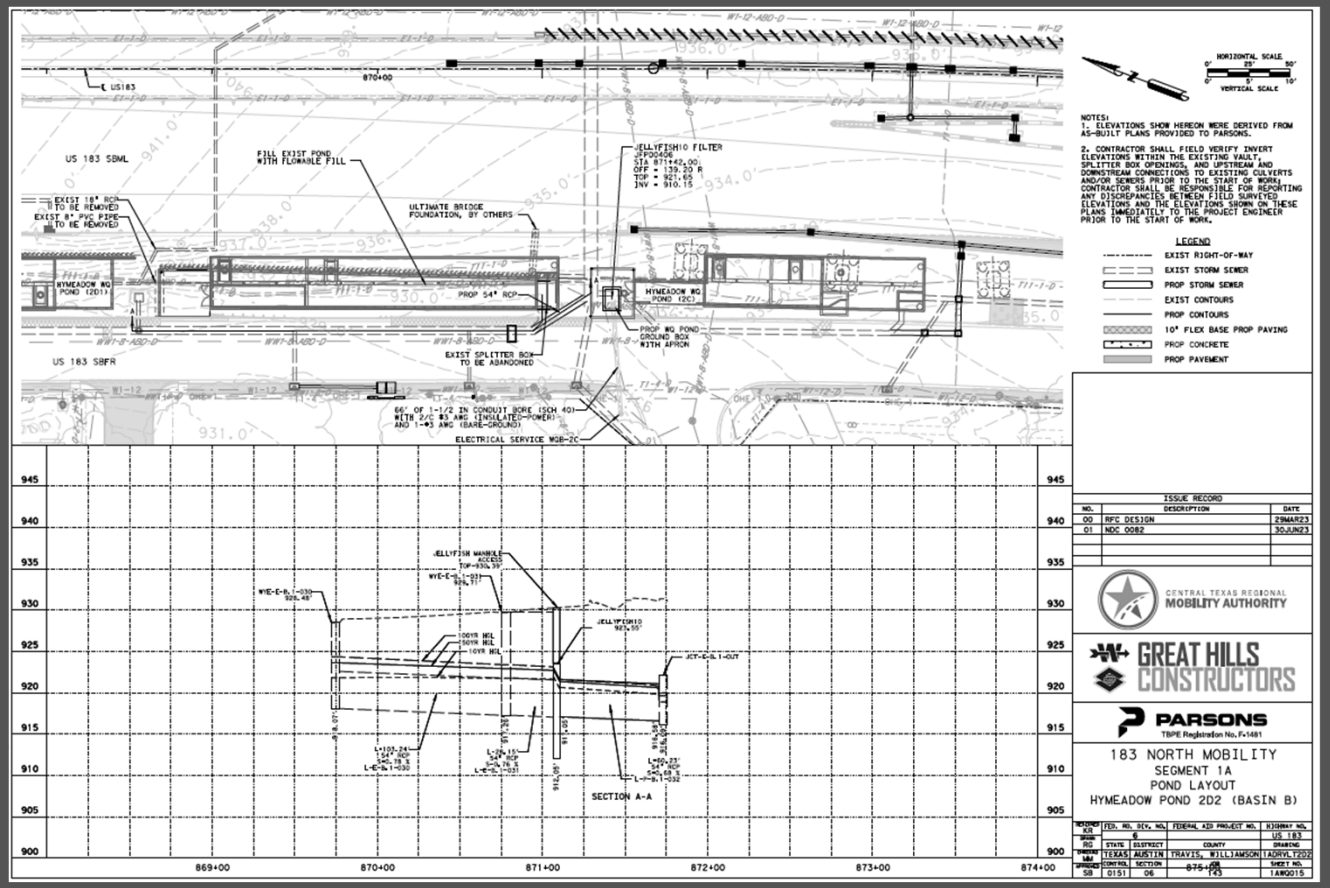

GREAT HILLS CONSTRUCTORS

Inspection

- FROM TCEQ COMPLYING WITH THE EDWARDS AQUIFER RULES-TECHNICAL GUIDANCE ON BEST MANAGEMENT PRACTICES (JUNE 5, 2018)
- POST CONSTRUCTION INSPECTION REQUIRED PRIOR TO PUTTING INTO SERVICE.
- QUARTERLY INSPECTIONS RECOMMENDED FOR FIRST YEAR OF OPERATION THEN A MAINTENANCE PLAN DEVELOPED
- MINIMUM ANNUAL INSPECTION IN SUBSEQUENT YEARS

GREAT HILLS CONSTRUCTORS

Maintenance

- FROM TCEQ COMPLYING WITH THE EDWARDS AQUIFER RULES-TECHNICAL GUIDANCE ON BEST MANAGEMENT PRACTICES (JUNE 5, 2018)
- MAINTANENCE MUST BE PERFORMED ANNUALLY
- CLEANING INCLUDES REMOVAL AND DISPOSAL OF ALL WATER,SEDIMENT, OIL AND GREASE, AND DEBRIS
- MANNED ENTRY REQUIRED NEEDING CERTIFICATION FOR CONFINED SPACE ENTRY

GREAT HILLS CONSTRUCTORS

Maintenance (Continued)

- FILTER CARTRIDGES NEED TESTING FOR FLOW RATE ANNUALLY ON A SINGLE DRAINDOWN CARTRIDGE USING A JELLYFISH CARTRIDGE BACKFLUSH PIPE. IF FLOW RATE DOES NOT MEET 14 GALLONS IN 15 SECONDS, ALL CARTRIDGES IN THE UNIT NEED TO BE BACKFLUSHED. IF AFTER THIS PROCESS CARTRIDGES NOT MEETING FLOW REQUIREMENTS MUST BE REPLACED
- UNIT SHOULD BE CLEANED OUT IMMEDIATELY AFTER AN OIL, FUEL, OR CHEMICAL SPILL
- CARTRIDGE CLEANING IS PERFORMED BY REMOVING THE CARTRIDGE FROM THE CARTRIDGE DECK AND EXTERNALLY RINSING THE FILTRATION TENTACLES USING A LOW-PRESSURE WASHER. IF PERFORMED WITHIN THE STRUCTURE, THE CARTRIGE SHOULD BE SUSPENDED OVER THE MAINTENANCE ACCESS WALL OPENING IN THE CARTRIDGE DECK SO THE RINSATE FLOWS INTO THE LOWER CHAMBER OF THE JELLYFISH FILTER. IF RINSING IS DONE OUTSIDE THE UNIT, THE CARTRIDGE TENTACLES SHOULD BE RINSED IN A SUITABLE BASIN SUCH AS A PLASTIC BARREL OR TUB, WITH RINSATE SUBSEQUENTLY PURED INTO THE MAINTENANCE ACCESS WALL OPENING IN THE CARTRIDGE DECK. SEDIMENT IS SUBSEQUENTLY REMOVED FROM THE LOWER CHAMBER BY STANDARD VACUUM SERVICE.

Features, Benefits, Requirements

- FEATURES
  - MEETS REGULATORY REQUIREMENTS
    - PROVIDES MORE TSS REMOVAL THAN CURRENT VAULT CONFIGURATION
  - PREFABRICATED SELF-CONTAINED UNITS
  - PROVEN HISTORY OF EFFECTIVENESS

- BENEFITS
  - MINIMIZES HIGH RISK CONSTRUCTION AROUND EXISTING PROJECT FEATURES
  - MINIMIZES REUSE OF AGED EXISTING VAULTS
  - IMPROVES CONSTRUCTION SCHEDULE FOR WQ ELEMENTS

- REQUIREMENTS
  - REQUIRES VARIANCE TO CURRENT TPs
  - REQUIRES RESUBMITTAL AND ACCEPTANCE BY TCEQ
  - CHANGES MAINTENANCE REQUIREMENTS FOR CTRMA

GREAT HILLS CONSTRUCTORS