Texas Commission on Environmental Quality

Edwards Aquifer Application Cover Page

Our Review of Your Application

The Edwards Aquifer Program staff conducts an administrative and technical review of all applications. The turnaround time for administrative review can be up to 30 days as outlined in 30 TAC 213.4(e). Generally administrative completeness is determined during the intake meeting or within a few days of receipt. The turnaround time for technical review of an administratively complete Edwards Aquifer application is 90 days as outlined in 30 TAC 213.4(e). Please know that the review and approval time is directly impacted by the quality and completeness of the initial application that is received. In order to conduct a timely review, it is imperative that the information provided in an Edwards Aquifer application include final plans, be accurate, complete, and in compliance with 30 TAC 213.

Administrative Review

1. Edwards Aquifer applications must be deemed administratively complete before a technical review can begin. To be considered administratively complete, the application must contain completed forms and attachments, provide the requested information, and meet all the site plan requirements. The submitted application and plan sheets should be final plans. Please submit one full-size set of plan sheets with the original application, and half-size sets with the additional copies.

   To ensure that all applicable documents are included in the application, the program has developed tools to guide you and web pages to provide all forms, checklists, and guidance. Please visit the below website for assistance: http://www.tceq.texas.gov/field/eapp.

2. This Edwards Aquifer Application Cover Page form (certified by the applicant or agent) must be included in the application and brought to the administrative review meeting.

3. Administrative reviews are scheduled with program staff who will conduct the review. Applicants or their authorized agent should call the appropriate regional office, according to the county in which the project is located, to schedule a review. The average meeting time is one hour.

4. In the meeting, the application is examined for administrative completeness. Deficiencies will be noted by staff and emailed or faxed to the applicant and authorized agent at the end of the meeting, or shortly after. Administrative deficiencies will cause the application to be deemed incomplete and returned.

   An appointment should be made to resubmit the application. The application is re-examined to ensure all deficiencies are resolved. The application will only be deemed administratively complete when all administrative deficiencies are addressed.

5. If an application is received by mail, courier service, or otherwise submitted without a review meeting, the administrative review will be conducted within 30 days. The applicant and agent will be contacted with the results of the administrative review. If the application is found to be administratively incomplete, it can be retrieved from the regional office or returned by regular mail. If returned by mail, the regional office may require arrangements for return shipping.

6. If the geologic assessment was completed before October 1, 2004 and the site contains "possibly sensitive" features, the assessment must be updated in accordance with the *Instructions to Geologists* (TCEQ-0585 Instructions).

Technical Review

1. When an application is deemed administratively complete, the technical review period begins. The regional office will distribute copies of the application to the identified affected city, county, and groundwater conservation district whose jurisdiction includes the subject site. These entities and the public have 30 days to provide comments on the application to the regional office. All comments received are reviewed by TCEQ.

2. A site assessment is usually conducted as part of the technical review, to evaluate the geologic assessment and observe existing site conditions. The site must be accessible to our staff. The site boundaries should be

clearly marked, features identified in the geologic assessment should be flagged, roadways marked and the alignment of the Sewage Collection System and manholes should be staked at the time the application is submitted. If the site is not marked the application may be returned.

3. We evaluate the application for technical completeness and contact the applicant and agent via Notice of Deficiency (NOD) to request additional information and identify technical deficiencies. There are two deficiency response periods available to the applicant. There are 14 days to resolve deficiencies noted in the first NOD. If a second NOD is issued, there is an additional 14 days to resolve deficiencies. If the response to the second notice is not received, is incomplete or inadequate, or provides new information that is incomplete or inadequate, the application must be withdrawn or will be denied. Please note that because the technical review is underway, whether the application is withdrawn or denied **the application fee will be forfeited**.
4. The program has 90 calendar days to complete the technical review of the application. If the application is technically adequate, such that it complies with the Edwards Aquifer rules, and is protective of the Edwards Aquifer during and after construction, an approval letter will be issued. Construction or other regulated activity may not begin until an approval is issued.

Mid-Review Modifications

It is important to have final site plans prior to beginning the permitting process with TCEQ to avoid delays.

Occasionally, circumstances arise where you may have significant design and/or site plan changes after your Edwards Aquifer application has been deemed administratively complete by TCEQ. This is considered a "Mid-Review Modification". Mid-Review Modifications may require redistribution of an application that includes the proposed modifications for public comment.

If you are proposing a Mid-Review Modification, two options are available:

- If the technical review has begun your application can be denied/withdrawn, your fees will be forfeited, and the plan will have to be resubmitted.
- TCEQ can continue the technical review of the application as it was submitted, and a modification application can be submitted at a later time.

If the application is denied/withdrawn, the resubmitted application will be subject to the administrative and technical review processes and will be treated as a new application. The application will be redistributed to the affected jurisdictions.

Please contact the regional office if you have questions. If your project is located in Williamson, Travis, or Hays County, contact TCEQ's Austin Regional Office at 512-339-2929. If your project is in Comal, Bexar, Medina, Uvalde, or Kinney County, contact TCEQ's San Antonio Regional Office at 210-490-3096

Please fill out all required fields below and submit with your application.

1. Regulated Entity Name: JSACQ Georgetown LP						**2. Regulated Entity No.:**			
3. Customer Name: JSACQ Georgetown LP						**4. Customer No.: N/A**			
5. Project Type: **(Please circle/check one)**	(New)		Modification			Extension		Exception	
6. Plan Type: **(Please circle/check one)**	WPAP	CZP	(SCS)	UST	AST	EXP	EXT	Technical Clarification	Optional Enhanced Measures
7. Land Use: **(Please circle/check one)**	Residential		(Non-residential)			**8. Site (acres):**		N/A	
9. Application Fee:	$6,500		**10. Permanent BMP(s):**			N/A			
11. SCS (Linear Ft.):	13,406		**12. AST/UST (No. Tanks):**			0			
13. County:	Williamson		**14. Watershed:**			Berry Creek			

Application Distribution

Instructions: Use the table below to determine the number of applications required. One original and one copy of the application, plus additional copies (as needed) for each affected incorporated city, county, and groundwater conservation district are required. Linear projects or large projects, which cross into multiple jurisdictions, can require additional copies. Refer to the "Texas Groundwater Conservation Districts within the EAPP Boundaries" map found at:

http://www.tceq.texas.gov/assets/public/compliance/field_ops/eapp/EAPP%20GWCD%20map.pdf

For more detailed boundaries, please contact the conservation district directly.

Austin Region			
County:	**Hays**	**Travis**	**Williamson**
Original (1 req.)	___	___	___
Region (1 req.)	___	___	___
County(ies)	___	___	___
Groundwater Conservation District(s)	___Edwards Aquifer Authority ___Barton Springs/ Edwards Aquifer ___Hays Trinity ___Plum Creek	___Barton Springs/ Edwards Aquifer	NA
City(ies) Jurisdiction	___Austin ___Buda ___Dripping Springs ___Kyle ___Mountain City ___San Marcos ___Wimberley ___Woodcreek	___Austin ___Bee Cave ___Pflugerville ___Rollingwood ___Round Rock ___Sunset Valley ___West Lake Hills	___Austin ___Cedar Park ___Florence X_Georgetown ___Jerrell ___Leander ___Liberty Hill ___Pflugerville ___Round Rock

San Antonio Region					
County:	**Bexar**	**Comal**	**Kinney**	**Medina**	**Uvalde**
Original (1 req.)	___	___	___	___	___
Region (1 req.)	___	___	___	___	___
County(ies)	___	___	___	___	___
Groundwater Conservation District(s)	___ Edwards Aquifer Authority ___Trinity-Glen Rose	___Edwards Aquifer Authority	___Kinney	___EAA ___Medina	___EAA ___Uvalde
City(ies) Jurisdiction	___Castle Hills ___Fair Oaks Ranch ___Helotes ___Hill Country Village ___Hollywood Park ___San Antonio (SAWS) ___Shavano Park	___Bulverde ___Fair Oaks Ranch ___Garden Ridge ___New Braunfels ___Schertz	NA	___San Antonio ETJ (SAWS)	NA

I certify that to the best of my knowledge, that the application is complete and accurate. This application is hereby submitted to TCEQ for administrative review and technical review. Jacob W. Valentien, P.E.
Print Name of Customer/Authorized Agent  March 08, 2024
Signature of Customer/Authorized Agent Date

FOR TCEQ INTERNAL USE ONLY				
Date(s)Reviewed:		Date Administratively Complete:		
Received From:		Correct Number of Copies:		
Received By:		Distribution Date:		
EAPP File Number:		Complex:		
Admin. Review(s) (No.):		No. AR Rounds:		
Delinquent Fees (Y/N):		Review Time Spent:		
Lat./Long. Verified:		SOS Customer Verification:		
Agent Authorization Complete/Notarized (Y/N):		Fee Check:	Payable to TCEQ (Y/N):	
Core Data Form Complete (Y/N):			Signed (Y/N):	
Core Data Form Incomplete Nos.:			Less than 90 days old (Y/N):	

General Information Form

Texas Commission on Environmental Quality

For Regulated Activities on the Edwards Aquifer Recharge and Transition Zones and Relating to 30 TAC §213.4(b) & §213.5(b)(2)(A), (B) Effective June 1, 1999

To ensure that the application is administratively complete, confirm that all fields in the form are complete, verify that all requested information is provided, consistently reference the same site and contact person in all forms in the application, and ensure forms are signed by the appropriate party.

Note: Including all the information requested in the form and attachments contributes to more streamlined technical reviews.

Signature

To the best of my knowledge, the responses to this form accurately reflect all information requested concerning the proposed regulated activities and methods to protect the Edwards Aquifer. This **General Information Form** is hereby submitted for TCEQ review. The application was prepared by:

Print Name of Customer/Agent: Jacob W. Valentien, P.E.

Date: March 08, 2024

Signature of Customer/Agent:



Project Information

1. Regulated Entity Name: JSACQ Georgetown LP
2. County: Williamson
3. Stream Basin: Dry Berry Creek
4. Groundwater Conservation District (If applicable): N/A
5. Edwards Aquifer Zone:

   ☒ Recharge Zone
   ☐ Transition Zone

6. Plan Type:

   ☐ WPAP
   ☒ SCS
   ☐ Modification
   ☐ AST
   ☐ UST
   ☐ Exception Request

7. Customer (Applicant):

   Contact Person: Miles Terry
   Entity: JSACQ Georgetown LP
   Mailing Address: 4890 Alpha Road, Suite 100
   City, State: Dallas, Texas Zip: 75244
   Telephone: (972)-628-7400 FAX: N/A
   Email Address: mterry@jacksonshaw.com

8. Agent/Representative (If any):

   Contact Person: Jacob W. Valentien
   Entity: Westwood Professional Services, Inc.
   Mailing Address: 8701 N. Mopac Expressway, Suite 320
   City, State: Austin, Texas Zip: 78759
   Telephone: 512-485-0831 FAX: N/A
   Email Address: jacob.Valentien@westwoodps.com

9. Project Location:

   ☒ The project site is located inside the city limits of Partially in the City of Georgetown.
   ☒ The project site is located outside the city limits but inside the ETJ (extra-territorial jurisdiction) of Partially in the City of Georgetown ETJ.
   ☐ The project site is not located within any city's limits or ETJ.

10. ☒ The location of the project site is described below. The description provides sufficient detail and clarity so that the TCEQ's Regional staff can easily locate the project and site boundaries for a field investigation.

    The site located at 4805 South IH35 Georgetown, Texas 78633 in the City of Georgetown full-purposed jurisdicion. The site is bordered on the East by IH 35 Southwest by texas HWY 195.

11. ☒ **Attachment A – Road Map**. A road map showing directions to and the location of the project site is attached. The project location and site boundaries are clearly shown on the map.

12. ☒ **Attachment B - USGS / Edwards Recharge Zone Map**. A copy of the official 7 ½ minute USGS Quadrangle Map (Scale: 1" = 2000') of the Edwards Recharge Zone is attached. The map(s) clearly show:

    ☒ Project site boundaries.
    ☒ USGS Quadrangle Name(s).
    ☒ Boundaries of the Recharge Zone (and Transition Zone, if applicable).
    ☒ Drainage path from the project site to the boundary of the Recharge Zone.

13. ☒ **The TCEQ must be able to inspect the project site or the application will be returned**. Sufficient survey staking is provided on the project to allow TCEQ regional staff to locate the boundaries and alignment of the regulated activities and the geologic or manmade features noted in the Geologic Assessment.

☒ Survey staking will be completed by this date: : April 01, 2024

14. ☒ **Attachment C – Project Description**. Attached at the end of this form is a detailed narrative description of the proposed project. The project description is consistent throughout the application and contains, at a minimum, the following details:

☒ Area of the site
☒ Offsite areas
☒ Impervious cover
☒ Permanent BMP(s)
☒ Proposed site use
☒ Site history
☒ Previous development
☒ Area(s) to be demolished

15. Existing project site conditions are noted below:

☐ Existing commercial site
☐ Existing industrial site
☐ Existing residential site
☐ Existing paved and/or unpaved roads
☐ Undeveloped (Cleared)
☒ Undeveloped (Undisturbed/Uncleared)
☐ Other: _____

Prohibited Activities

16. ☒ I am aware that the following activities are prohibited on the Recharge Zone and are not proposed for this project:

(1) Waste disposal wells regulated under 30 TAC Chapter 331 of this title (relating to Underground Injection Control);

(2) New feedlot/concentrated animal feeding operations, as defined in 30 TAC §213.3;

(3) Land disposal of Class I wastes, as defined in 30 TAC §335.1;

(4) The use of sewage holding tanks as parts of organized collection systems; and

(5) New municipal solid waste landfill facilities required to meet and comply with Type I standards which are defined in §330.41(b), (c), and (d) of this title (relating to Types of Municipal Solid Waste Facilities).

(6) New municipal and industrial wastewater discharges into or adjacent to water in the state that would create additional pollutant loading.

17. ☐ I am aware that the following activities are prohibited on the Transition Zone and are not proposed for this project:

(1) Waste disposal wells regulated under 30 TAC Chapter 331 (relating to Underground Injection Control);

(2) Land disposal of Class I wastes, as defined in 30 TAC §335.1; and

(3) New municipal solid waste landfill facilities required to meet and comply with Type I standards which are defined in §330.41 (b), (c), and (d) of this title.

Administrative Information

18. The fee for the plan(s) is based on:

- ☐ For a Water Pollution Abatement Plan or Modification, the total acreage of the site where regulated activities will occur.
- ☒ For an Organized Sewage Collection System Plan or Modification, the total linear footage of all collection system lines.
- ☐ For a UST Facility Plan or Modification or an AST Facility Plan or Modification, the total number of tanks or piping systems.
- ☐ A request for an exception to any substantive portion of the regulations related to the protection of water quality.
- ☐ A request for an extension to a previously approved plan.

19. ☒ Application fees are due and payable at the time the application is filed. If the correct fee is not submitted, the TCEQ is not required to consider the application until the correct fee is submitted. Both the fee and the Edwards Aquifer Fee Form have been sent to the Commission's:

- ☐ TCEQ cashier
- ☒ Austin Regional Office (for projects in Hays, Travis, and Williamson Counties)
- ☐ San Antonio Regional Office (for projects in Bexar, Comal, Kinney, Medina, and Uvalde Counties)

20. ☒ Submit one (1) original and one (1) copy of the application, plus additional copies as needed for each affected incorporated city, groundwater conservation district, and county in which the project will be located. The TCEQ will distribute the additional copies to these jurisdictions. The copies must be submitted to the appropriate regional office.

21. ☒ No person shall commence any regulated activity until the Edwards Aquifer Protection Plan(s) for the activity has been filed with and approved by the Executive Director.

Westwood

Attachment A – Road Map

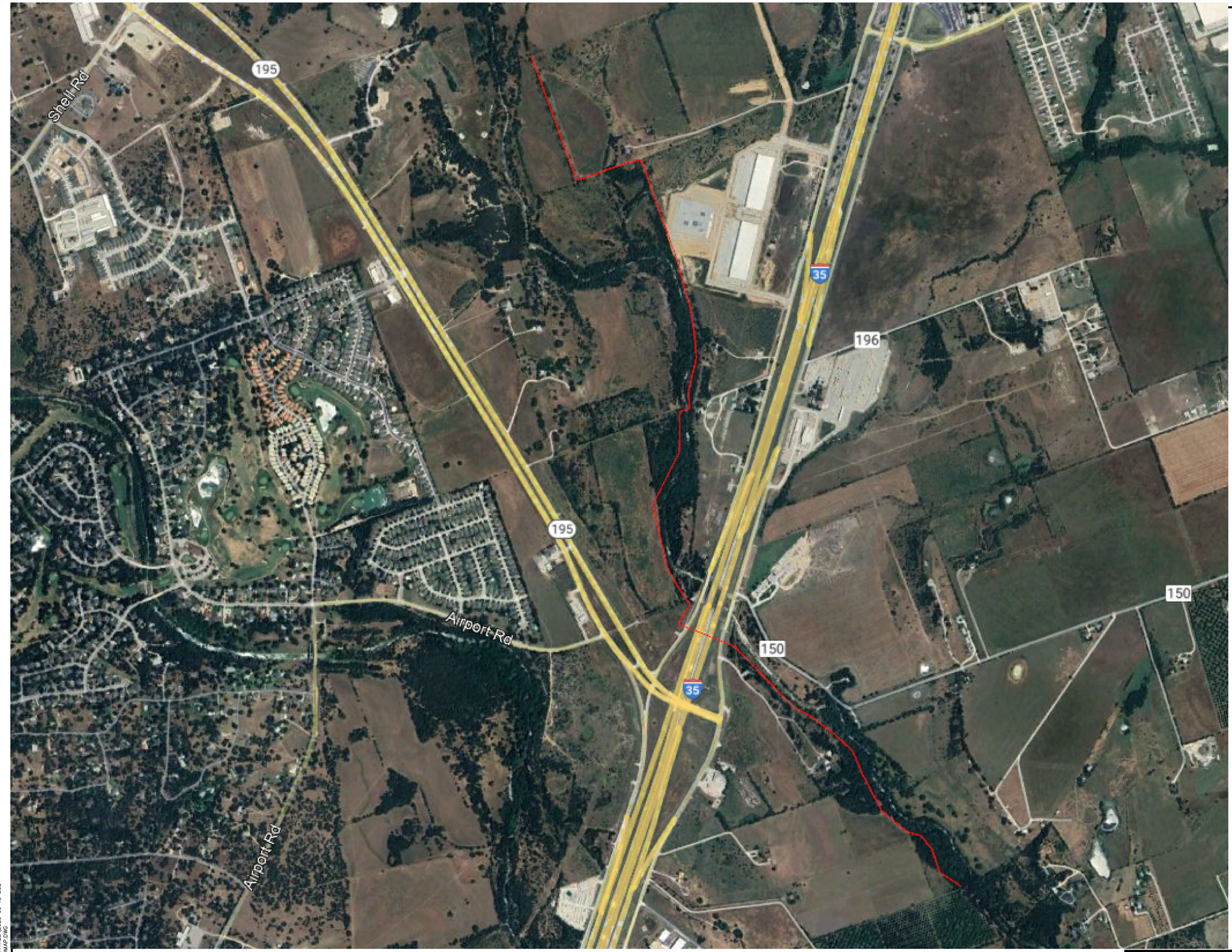

ATTACHMENT A ROAD MAP

TBPE FIRM REGISTRATION NO. F-11756
TBPLS FIRM REGISTRATION NO. LS-10074301

Westwood
Westwood Professional Services, Inc.
Phone (512) 485-0831
Toll Free (888) 937-5150
8701 N. Mopac Expy, Suite 320
Austin, TX 78759
westwoodps.com

DRAWN BY	CHECKED BY	SCALE	DATE	JOB NUMBER
MBM	MS	N/A	03/2024	4670–22.676

DRY BERRY CREEK

TGLASPER
3/8/2024 9:10 AM
M:\2022\4670-22.676\SUBMITTALS\2023 06 13 SCS APPLICATION\DWG\SCSAPP_ROADMAP.DWG

Westwood

Attachment B – USGS/ Edwards Aquifer Recharge Zone

ATTACHMENT B

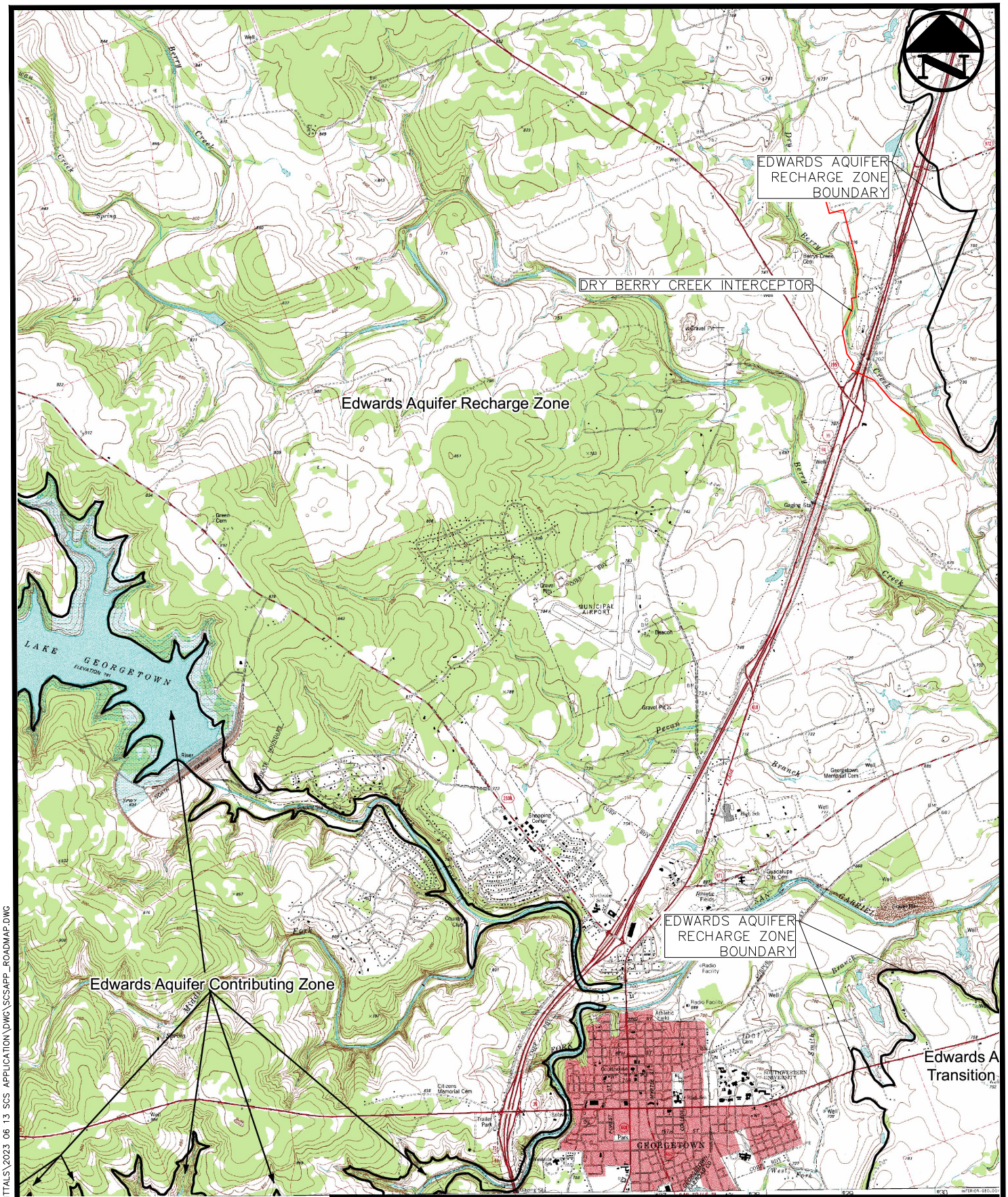

Westwood
Westwood Professional Services, Inc.
Phone (512) 485-0831
Toll Free (888) 937-5150
8701 N. Mopac Expy, Suite 320
Austin, TX 78759
westwoodps.com

DRAWN BY	CHECKED BY	SCALE	DATE	JOB NUMBER
MBM	MS	1"=2000'	03/2024	4670-22.676

TBPE FIRM REGISTRATION NO. F-11756
TBPLS FIRM REGISTRATION NO. LS-10074301

TGLASPER 3/8/2024 9:11 AM
M:\DWG-46\4670-22.676\SUBMITTALS\2023 06 13 SCS APPLICATION\DWG\SCSAPP_ROADMAP.DWG

Westwood

Attachment C: Project Description

The proposed development includes the construction of wastewater interceptor (DBCI) for the purpose of extending service to proposed development. The DBCI located along the following addresses:

- 3600 North IH-35 Georgetown TX 78633
- 4100 North IH-35 Georgetown TX 78633
- 4805 North IH-35 Georgetown TX 78633
- 5301 North IH-35 Georgetown TX 78633
- 220 HWY 195 Georgetown TX 78633
- 350 HWY 195 Georgetown TX 78633

The surrounding areas are also mostly undeveloped and are currently zoned for agricultural use. This development falls partially within the City of Georgetown full-purpose jurisdiction and the City of Georgetown Extra-Territorial Jurisdiction. There has been no previous development along the 13,200 ft DBCI route. A portion of the project intersects Interstate 35. The existing site contains mostly grass meadow with trees or brushy vegetation and Class C soil classification. According to FEMA Map 48491C0285F, the subject site does fall within a regulatory floodplain. There are no existing structures that need to be demolished.

The proposed DBCI traverses across multiple tracts. Each tract owner has provided an Owner Authorization form for the work to be completed for the project. The proposed sewer system consists of:

- 9,841 LF of 36-inch CCFRPM
- 1,920 LF of 12-inch PVC SDR-26
- 1,645 LF of 8-inch PVC SDR-26

The gravity sanitary sewer collection system will convey all sewer to the proposed Berry Creek Interceptor, which in turn conveys all wastewater to the existing Pecan Branch Wastewater Treatment Plant.

Westwood

Geological Assessment Form

Attachment A Geological Assessment Table
Attachment B Stratigraphic Column
Attachment C Site Geology & Photographic Log
Attachment D Site Maps
Attachment E Physical Setting Report

BRAUN INTERTEC

The Science You Build On.



Westwood

Geologic Assessment - Dry Berry Creek Interceptors S1 & S2
IH-35, Georgetown, Texas

Braun Intertec Corporation
2015 Donley Dr, Suite 460
Austin, Texas

June 2023

Geologic Assessment

Texas Commission on Environmental Quality

For Regulated Activities on The Edwards Aquifer Recharge/transition Zones and Relating to 30 TAC §213.5(b)(3), Effective June 1, 1999

To ensure that the application is administratively complete, confirm that all fields in the form are complete, verify that all requested information is provided, consistently reference the same site and contact person in all forms in the application, and ensure forms are signed by the appropriate party.

Note: Including all the information requested in the form and attachments contributes to more streamlined technical reviews.

Signature

To the best of my knowledge, the responses to this form accurately reflect all information requested concerning the proposed regulated activities and methods to protect the Edwards Aquifer. My signature certifies that I am qualified as a geologist as defined by 30 TAC Chapter 213.

Print Name of Geologist: Melissa Wann Telephone: 512-790-7181

Date: 6/26/2023 Fax: 512-493-9693

Representing: Braun Intertec Corporation, TBPG Registration No. 50151 (Name of Company and TBPG or TBPE registration number)

Signature of Geologist:

Melissa Wann 6.26.23

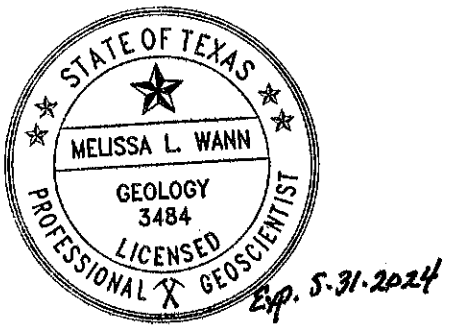

Regulated Entity Name: Westwood

Project Information

1. Date(s) Geologic Assessment was performed: 6/12/2023
2. Type of Project:
   - ☒ WPAP
   - ☒ SCS
   - ☐ AST
   - ☐ UST
3. Location of Project:
   - ☒ Recharge Zone
   - ☐ Transition Zone
   - ☐ Contributing Zone within the Transition Zone

4. ☒ **Attachment A - Geologic Assessment Table**. Completed Geologic Assessment Table (Form TCEQ-0585-Table) is attached.

5. ☒ Soil cover on the project site is summarized in the table below and uses the SCS Hydrologic Soil Groups* (Urban Hydrology for Small Watersheds, Technical Release No. 55, Appendix A, Soil Conservation Service, 1986). If there is more than one soil type on the project site, show each soil type on the site Geologic Map or a separate soils map.

Table 1 - Soil Units, Infiltration Characteristics and Thickness

Soil Name	Group*	Thickness(feet)
OkA - Oakalla silty clay loam	B	6.67
AsB - Austin silty clay	D	4.75
DnB - Denton silty clay	D	6.67
KrA - Krum silty clay	C	6

Soil Name	Group*	Thickness(feet)
KrB - Krum silty clay	C	6

** Soil Group Definitions (Abbreviated)*

A. Soils having a high infiltration rate when thoroughly wetted.

B. Soils having a moderate infiltration rate when thoroughly wetted.

C. Soils having a slow infiltration rate when thoroughly wetted.

D. Soils having a very slow infiltration rate when thoroughly wetted.

6. ☒ **Attachment B – Stratigraphic Column**. A stratigraphic column showing formations, members, and thicknesses is attached. The outcropping unit, if present, should be at the top of the stratigraphic column. Otherwise, the uppermost unit should be at the top of the stratigraphic column.

7. ☒ **Attachment C – Site Geology**. A narrative description of the site specific geology including any features identified in the Geologic Assessment Table, a discussion of the potential for fluid movement to the Edwards Aquifer, stratigraphy, structure(s), and karst characteristics is attached.

8. ☒ **Attachment D – Site Geologic Map(s)**. The Site Geologic Map must be the same scale as the applicant's Site Plan. The minimum scale is 1": 400'

   Applicant's Site Plan Scale: 1" = 40'
   Site Geologic Map Scale: 1" = 40'
   Site Soils Map Scale (if more than 1 soil type): 1" = 40'

9. Method of collecting positional data:

   ☒ Global Positioning System (GPS) technology.
   ☐ Other method(s). Please describe method of data collection: _____

10. ☒ The project site and boundaries are clearly shown and labeled on the Site Geologic Map.

11. ☒ Surface geologic units are shown and labeled on the Site Geologic Map.

12. ☐ Geologic or manmade features were discovered on the project site during the field investigation. They are shown and labeled on the Site Geologic Map and are described in the attached Geologic Assessment Table.

    ☒ Geologic or manmade features were not discovered on the project site during the field investigation.

13. ☐ The Recharge Zone boundary is shown and labeled, if appropriate.

14. All known wells (test holes, water, oil, unplugged, capped and/or abandoned, etc.): If applicable, the information must agree with Item No. 20 of the WPAP Application Section.

    ☐ There are _____ (#) wells present on the project site and the locations are shown and labeled. (Check all of the following that apply.)
    - ☐ The wells are not in use and have been properly abandoned.
    - ☐ The wells are not in use and will be properly abandoned.
    - ☐ The wells are in use and comply with 16 TAC Chapter 76.

    ☒ There are no wells or test holes of any kind known to exist on the project site.

Administrative Information

15. ☒ Submit one (1) original and one (1) copy of the application, plus additional copies as needed for each affected incorporated city, groundwater conservation district, and county in which the project will be located. The TCEQ will distribute the additional copies to these jurisdictions. The copies must be submitted to the appropriate regional office.

LIST OF ATTACHMENTS

Attachment A	Geologic Assessment Table
Attachment B	Stratigraphic Column
Attachment C	Site Geology & Photographic Log
Attachment D	Site Maps
Attachment E	Physical Setting Report

Attachment A

Geologic Assessment Table

GEOLOGIC ASSESSMENT TABLE

PROJECT NAME: Dry Berry Creek Interceptors S1 & S2

LOCATION			FEATURE CHARACTERISTICS											EVALUATION			PHYSICAL SETTING		
1A	1B*	1C*	2A	2B	3	4			5	5A	6	7	8A	8B	9	10		11		12
FEATURE ID	LATITUDE	LONGITUDE	FEATURE TYPE	POINTS	FORMATION	DIMENSIONS (FEET)			TREND (DEGREES)	DOM	DENSITY (NO/FT)	APERTURE (FEET)	INFILL	RELATIVE INFILTRATION RATE	TOTAL	SENSITIVITY		CATCHMENT AREA (ACRES)		TOPOGRAPHY
						X	Y	Z		10						<40	≥40	<1.6	≥1.6	

* DATUM: WGS 84

2A TYPE	TYPE	2B POINTS
C	Cave	30
SC	Solution cavity	20
SF	Solution-enlarged fracture(s)	20
F	Fault	20
O	Other natural bedrock features	5
MB	Manmade feature in bedrock	30
SW	Swallow hole	30
SH	Sinkhole	20
CD	Non-karst closed depression	5
Z	Zone, clustered or aligned features	30

8A INFILLING	
N	None, exposed bedrock
C	Coarse - cobbles, breakdown, sand, gravel
O	Loose or soft mud or soil, organics, leaves, sticks, dark colors
F	Fines, compacted clay-rich sediment, soil profile, gray or red colors
V	Vegetation. Give details in narrative description
FS	Flowstone, cements, cave deposits
X	Other materials - Water well was completed using 60 feet of 6-inch diameter plastic pipe, grouted to a depth of 18 feet.

12 TOPOGRAPHY

I have read, I understood, and I have followed the Texas Commission on Environmental Quality's Instructions to Geologists. The information presented here complies with that document and is a true representation of the conditions observed in the field. My signature certifies that I am qualified as a geologist as defined by 30 TAC Chapter 213.

Date 6/12/2023

Melissa Wann 6-26-23
Melissa Wann, P.G.

Sheet 1 of 1
(Attachment)

STATE OF TEXAS
MELISSA L. WANN
GEOLOGY
3484
LICENSED
PROFESSIONAL GEOSCIENTIST

Exp. 5-31-2024

TCEQ-0585-Table (Rev. 10-01-04)

Geologic Assessment Table - Attachment 1
GPS Requirements

DATUM: WGS 84
METHOD: GPS Unit - Trimble Catalyst DA2
DATE: June 12, 2023
USER: Melissa Wann

Attachment B

Stratigraphic Column

BRAUN INTERTEC

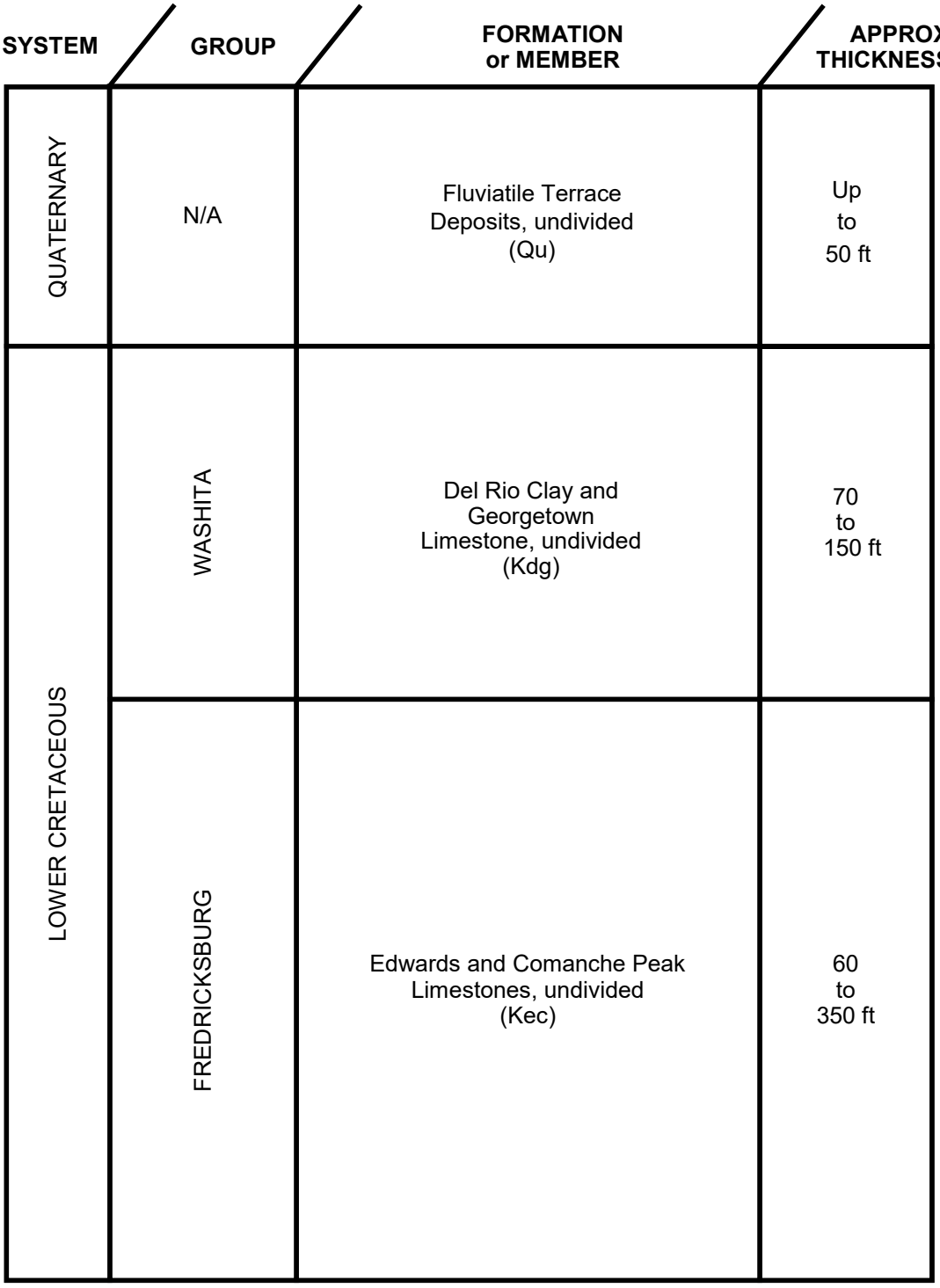

Attachment B
Stratigraphic Column
Dry Berry Creek Interceptor
Georgetown, Texas

BRAUN INTERTEC
The Science You Build On.

6/20/2023	Braun Project No.: B211393	Drawn by: WW	Checked by: MW	Revised by:

Attachment C

Site Geology & Photographic Log

BRAUN INTERTEC

ATTACHMENT C - SITE GEOLOGY

The Site consists of a 2.9-mile sanitary sewer pipe alignment corridor (including a 50 feet easement with a 10 foot buffer on either side) and is located in the vicinity of Dry Berry Creek along the southbound South IH-35 Frontage Road and extends approximately 0.7 miles southeast of the IH-35 and Texas Highway 195 junction in Georgetown, Williamson County, Texas (Site).

The Site consists of approximately 37.9 acres that is primarily riparian forest along Dry Berry Creek in the central and southern portion; the northern end of the Site is primarily vacant agricultural land.

Located in central Williamson County, the Site is on the western edge and uplifted portion of the Balcones Fault Zone. The Balcones Fault Zone divides two distinct physiographic provinces: the structurally uplifted Hill Country of the Edwards Plateau to the west and the Blackland Prairie of the Gulf Coast Plain to the east. The uplifted portion of the Balcones Fault Zone contains generally flat-lying beds and few faults. The nearest mapped fault is a normal fault located 0.54-mile east of the northernmost portion of the Site. The Site is within the mapped Edwards Aquifer Recharge Zone.

The Site generally slopes toward Dry Berry Creek and elevation ranges from approximately 670 to 715 feet above mean sea level (AMSL). Surface water runoff appears to occur as overland flow with a general drainage pattern toward Dry Berry Creek. Several dry drainages were observed in the central portion of the Site leading to Dry Berry Creek.

Based on a review of the Bureau of Economic Geology (BEG) Geologic Atlas of Texas, Austin Sheet (1974), Fluviatile Terrace Deposits (undivided, Qu), the Del Rio Clay, and Georgetown Formation (undivided, Kdg), and the Edwards and Comanche Peak Limestones (undivided, Kec) underlie the Site. The youngest on-Site geologic unit, the Fluviatile Terrace Deposits consists of various proportions of gravel, sand, silt and clay with a thickness that ranges up to 50 feet. The Del Rio Clay and the Georgetown Formation underlie the Fluviatile Terrace Deposits. The total thickness of these units range from approximately 70-150 feet with the Del Rio Clay consisting of calcareous and gypsiferous clay, and the Georgetown Limestone consisting of limestone with some shale and marl. The Edwards and Comanche Peak Limestone Formation underlies the Del Rio Clay and the Georgetown Formation. The total thickness of these units range from approximately 60-350 feet with the Edwards Limestone consisting of limestone with some dolostone and chert, and the Comanche Peak Limestone consisting of nodular limestone.

A field survey of the Site was conducted by Wesmond Williams and Maria Herrera on June 12, 2023. The field survey included reconnaissance of the property performed on foot on approximately 30-foot or smaller transects. The Site was vegetated with herbaceous cover, woody vines, understory shrub, and trees ranging from approximately 1-inch diameter to large live oak and pecan trees with up to 2-foot diameter trunks. Based on city utility GIS data from the City of Georgetown, a water main line is plotted along a center portion of the Site; during the field survey the water main line was not observed. The location of this water main line is shown on the **Attachment D Geologic Map and Soils Map.** A pre-reconnaissance review of the Texas Water Development Board (TWDB) groundwater data viewer displayed State Well #5819601 plotted on the southern portion of the Site and State Well #5819314 plotted on the northern portion of the Site; during the field survey the wells were not observed. Rock outcrops indicative of the Del Rio Clay were observed along Dry Berry Creek and in dry drainages leading to Dry Berry Creek in the center portion of the Site. No evidence of sinkholes or faults were observed during the field survey. Additionally, a review of published records did not reveal any caves or other mapped karst features in the general Site vicinity. Photographs from the field survey are provided in **Attachment C**.

No sensitive features were observed during Site reconnaissance; therefore, no features are listed in the Geologic Assessment Table.

The USGS National Map viewer and the Physical Setting Report maps a portion of the Dry Berry Creek on the Site. The location of Dry Berry Creek is shown on the **Attachment D Geologic Map and Soils Map**. At the time of the reconnaissance numerous portions of Dry Berry Creek were dry or had standing pools of water which would suggest a low infiltration rate into the underlying bedrock. In addition, portions of the creek bed that did not contain ponded water were infilled with soil or limestone cobble that did not exhibit karst features. Bedrock was not observed within the creek bed. As previously stated, rock outcrops indicative of the Del Rio Clay were observed along Dry Berry Creek and in dry drainages leading to Dry Berry Creek in the center portion of the Site. No karst features were observed in the outcrops. Because of the standing water, the lack of observed water flow and karst features, Dry Berry Creek is not considered a sensitive feature at the Site.

Two stormwater drainage inlets and two stormwater drainage pipes were observed in the center portion of the Site. These manmade features were not observed to be constructed in bedrock; therefore, they are not considered sensitive features at the Site.

Numerous (4 to 9-inch diameter) animal burrow and root collapses were observed in soil (no bedrock observed in these areas) throughout the Site. Because bedrock was not observed and these did not have indications of being an infiltration or a recharge feature, the animal burrow and root collapses are not considered sensitive features at the Site.

No other manmade features, natural features, or documented sensitive features were observed in the area during the field survey.



Photo 1: Southern point of corridor, viewed facing south.



Photo 2: Typical view of southern portion of corridor, viewed facing southeast.



Photo 3: Typical animal burrow found throughout corridor.



Photo 4: View of corridor at southbound I-35, viewed facing south-east.



Photo 5: View of dry stormwater drainage, viewed facing south-east.



Photo 6: View of standing water in central south Dry Berry Creek, viewed facing north .



Photo 7: Typical view of central portion of corridor, viewed facing west.



Photo 8: View of outcrop, viewed facing east.



Photo 9: View of dry drainage to Dry Berry Creek, viewed facing north.



Photo 10: View of standing water in central portion of Dry Berry Creek , viewed facing southeast.



Photo 11: Stormwater drainage pipes leading to Dry Berry Creek, viewed facing west.



Photo 12: View of apparent stormwater detention pond associated with drainage pipes, viewed facing east.



Photo 13: View of dry area and standing water in Dry Berry Creek, viewed facing south.



Photo 14: Typical view of northern portion of corridor, viewed facing northwest.

Attachment D

Site Maps

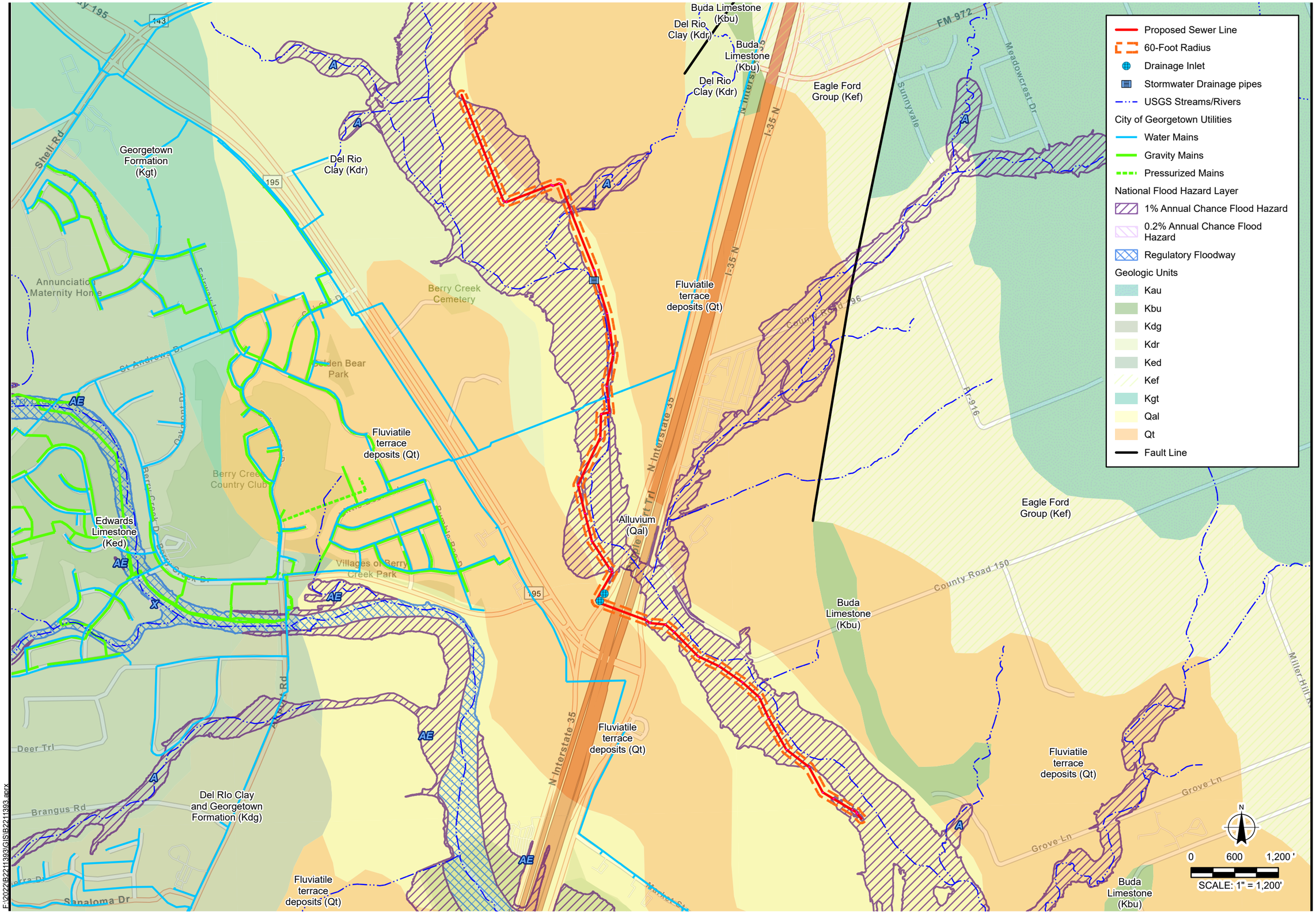

F:\2022\B2211393\GIS\B2211393.aprx

BRAUN INTERTEC
The Science You Build On.
2105 Donley Dr, Suite 400
Austin, TX 78758
512.493.9691
braunintertec.com

Drawing Information

Project No: B2211393

Drawing No: AttD_GeoMap

Drawn By:	SL
Drawn Drawn:	6/21/2023
Checked By:	WW
Last Modified:	6/22/2023

Project Information

Dry Berry Creek Inteceptor

Georgetown

Georgetown, Texas

Geologic Map

Attachment D

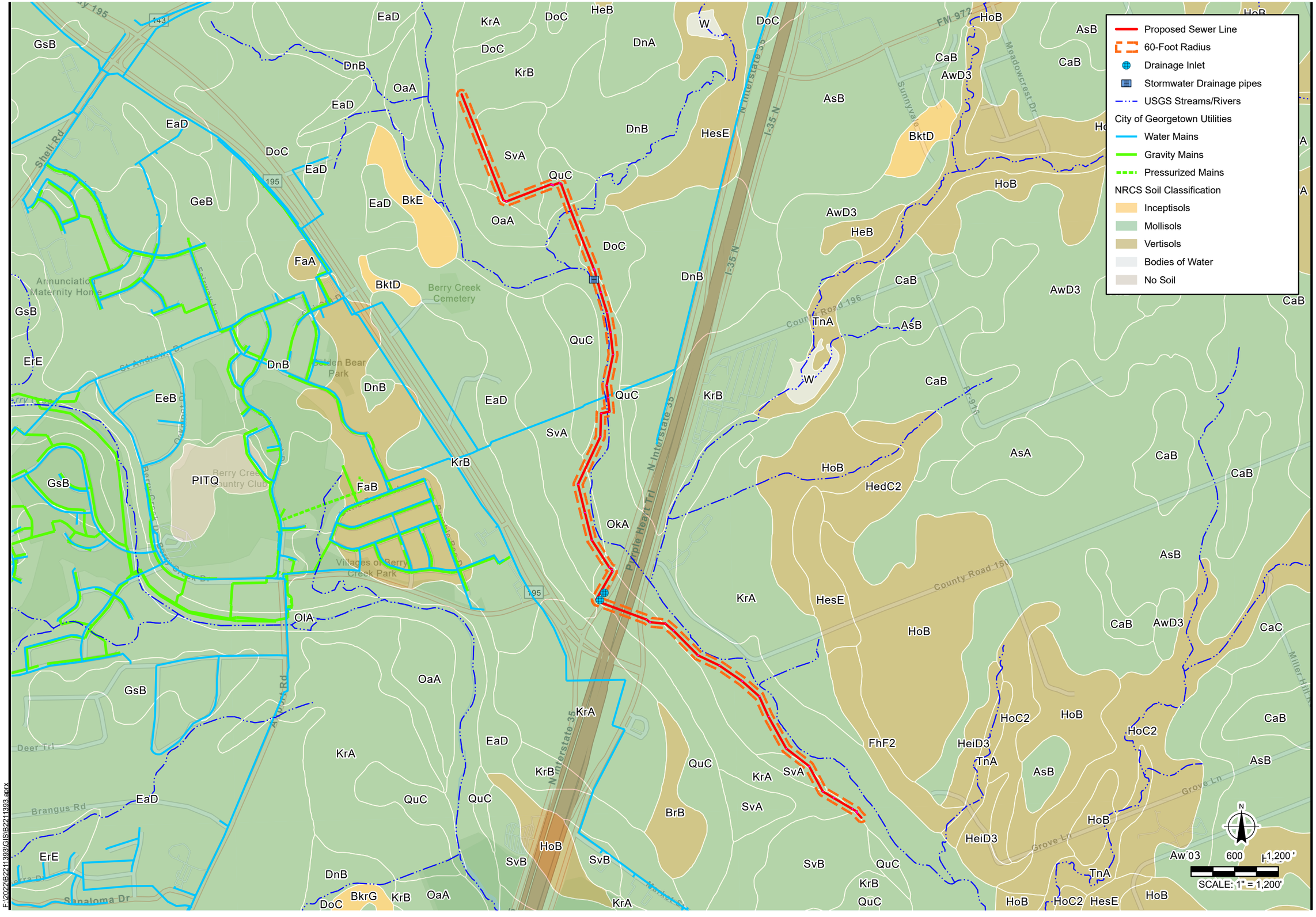

BRAUN INTERTEC
The Science You Build On.
2105 Donley Dr, Suite 400
Austin, TX 78758
512.493.9691
braunintertec.com

Drawing Information

Project No: B2211393

Drawing No: AttD_SoilMap

Drawn By:	SL
Drawn Drawn:	6/21/2023
Checked By:	WW
Last Modified:	6/21/2023

Project Information

Dry Berry Creek Inteceptor

Georgetown

Georgetown, Texas

Soils Map

Attachment D

F:\2022\B2211393\GIS\B2211393.aprx

Attachment E

Physical Setting Report

BRAUN INTERTEC

PSR
PHYSICAL SETTING REPORT

Property Information

Order Number:		23060601162p
Date Completed:		June 7, 2023
Project Number:		B2211393
Project Property:		Dry Berry Creek Corridor - Westwood Dry Berry Creek Corridor Georgetown TX
Coordinates:		
	Latitude:	30.70903054
	Longitude:	-97.65081873
	UTM Northing:	3397459.40567 Meters
	UTM Easting:	629328.545484 Meters
	UTM Zone:	UTM Zone 14R
	Elevation:	683.50 ft
	Slope Direction:	ENE

Topographic Information....2
Hydrologic Information....12
Geologic Information....22
Soil Information....27
Pipeline and Survey Map....49
Wells and Additional Sources....54
Summary....70
Detail Report....76
Radon Information....171
Appendix....172
Liability Notice....175

The ERIS ***Physical Setting Report - PSR*** provides comprehensive information about the physical setting around a site and includes a complete overview of topography and surface topology, in addition to hydrologic, geologic and soil characteristics. The location and detailed attributes of oil and gas wells, water wells, public water systems and radon are also included for review.

The compilation of both physical characteristics of a site and additional attribute data is useful in assessing the impact of migration of contaminants and subsequent impact on soils and groundwater.

Disclaimer

This Report does not provide a full environmental evaluation for the site or adjacent properties. Please see the terms and disclaimer at the end of the Report for greater detail.

Topographic Information

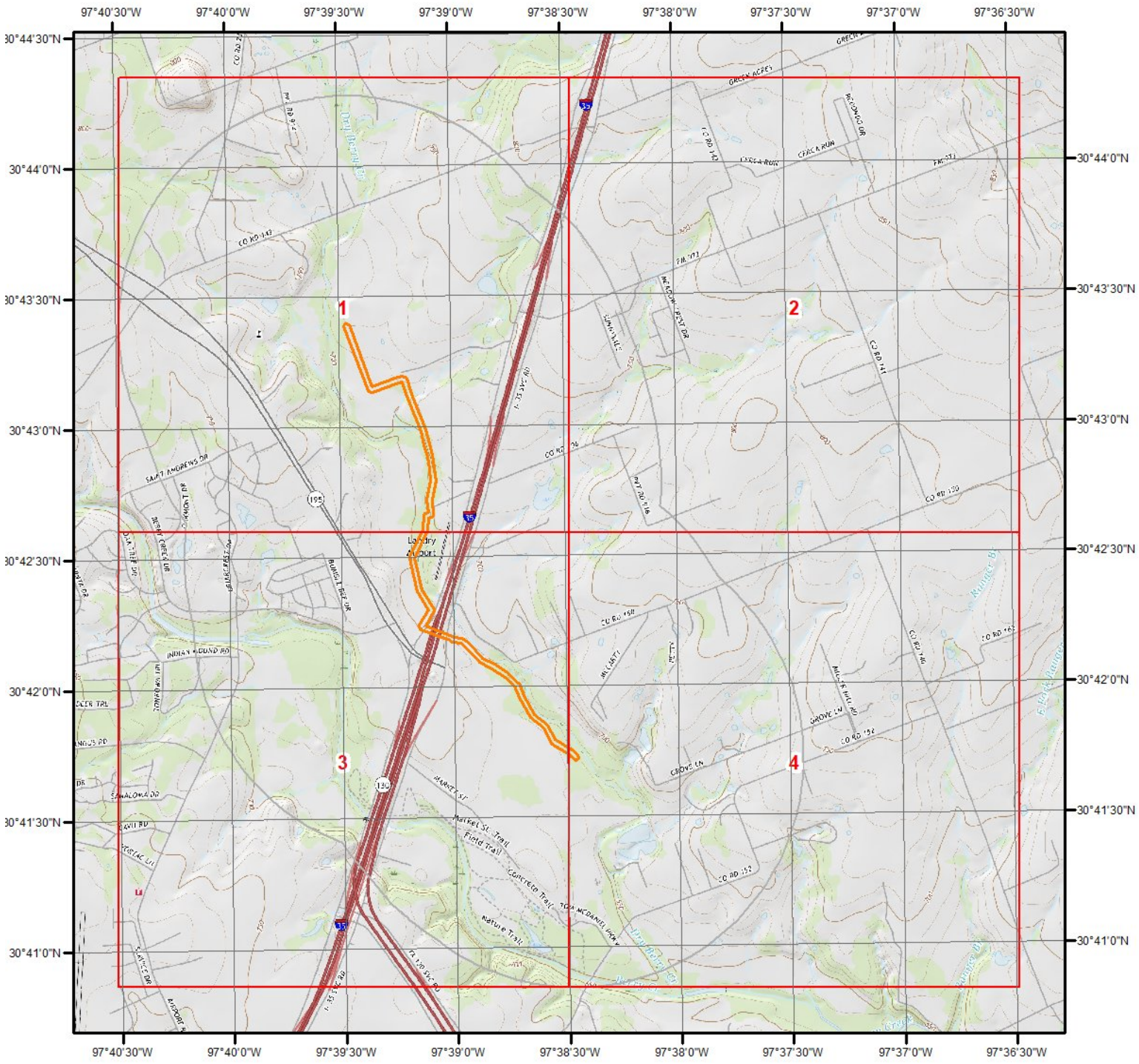

Current USGS Topo (2019)

0 0.2 0.4 0.8 1.2 1.6 Miles

N

Quadrangle(s): Leander,TX; Cobbs Cavern,TX; Round Rock,TX; Georgetown,TX; Leander NE,TX; Jarrell,TX; Hutto,TX; Weir,TX

Source: USGS 7.5 Minute Topographic Map

Topographic Information

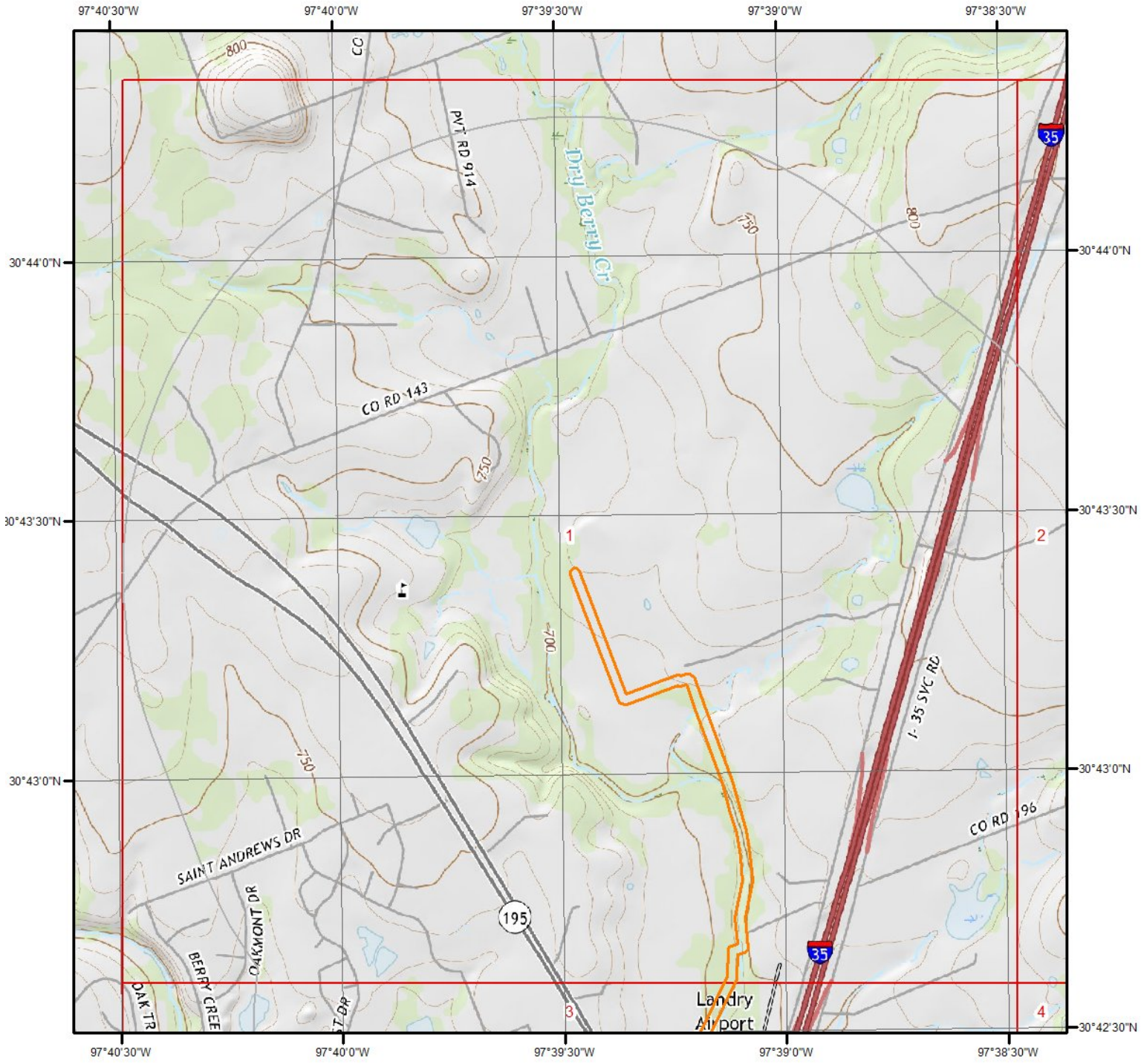

Current USGS Topo - Page 1

0 0.2 0.4 0.8 Miles

N

Quadrangle(s): Georgetown,TX

Source: USGS 7.5 Minute Topographic Map

Topographic Information

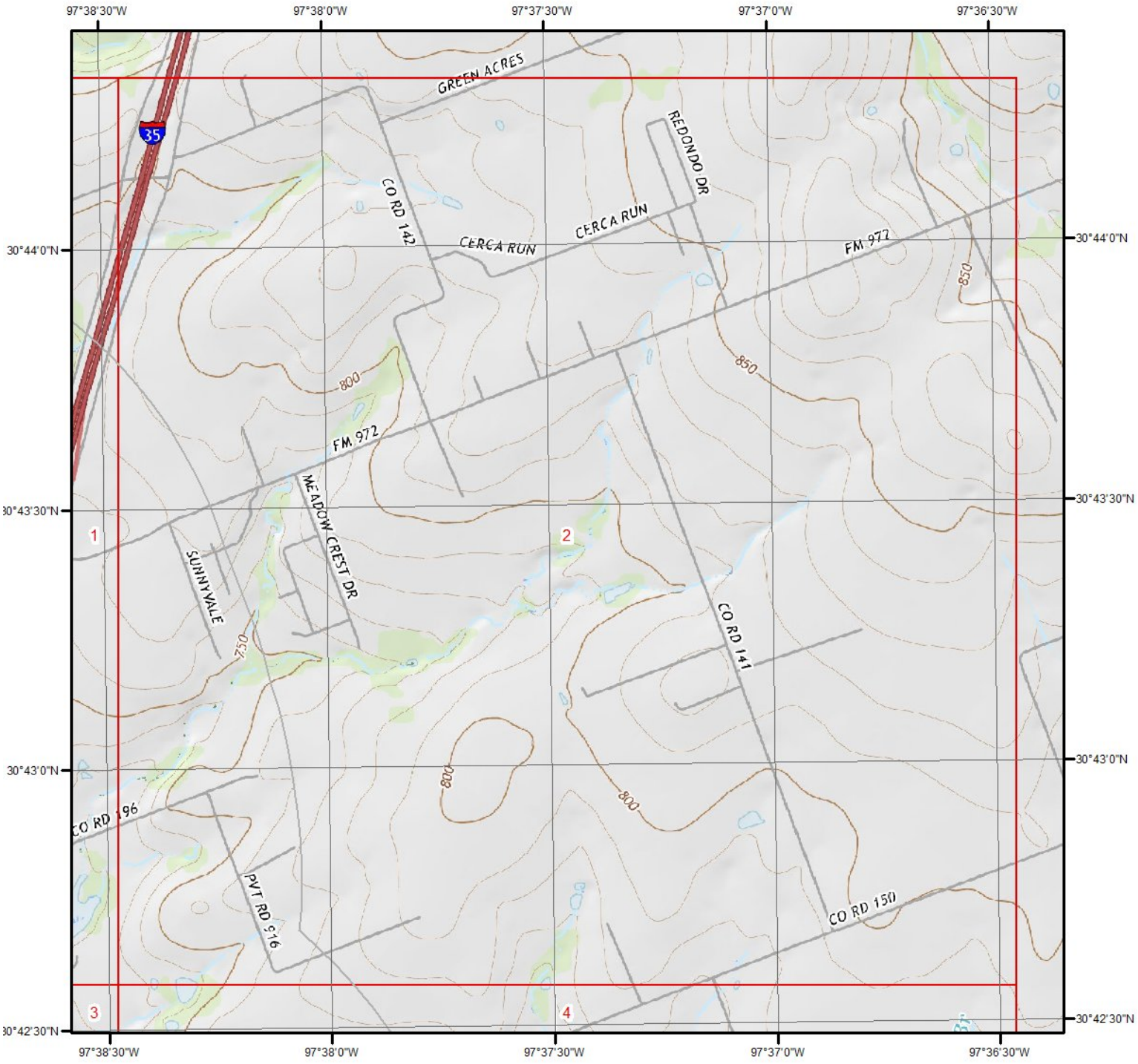

Current USGS Topo - Page 2

Miles
0 0.2 0.4 0.8

N

Quadrangle(s): Georgetown,TX; Weir,TX

Source: USGS 7.5 Minute Topographic Map

Topographic Information

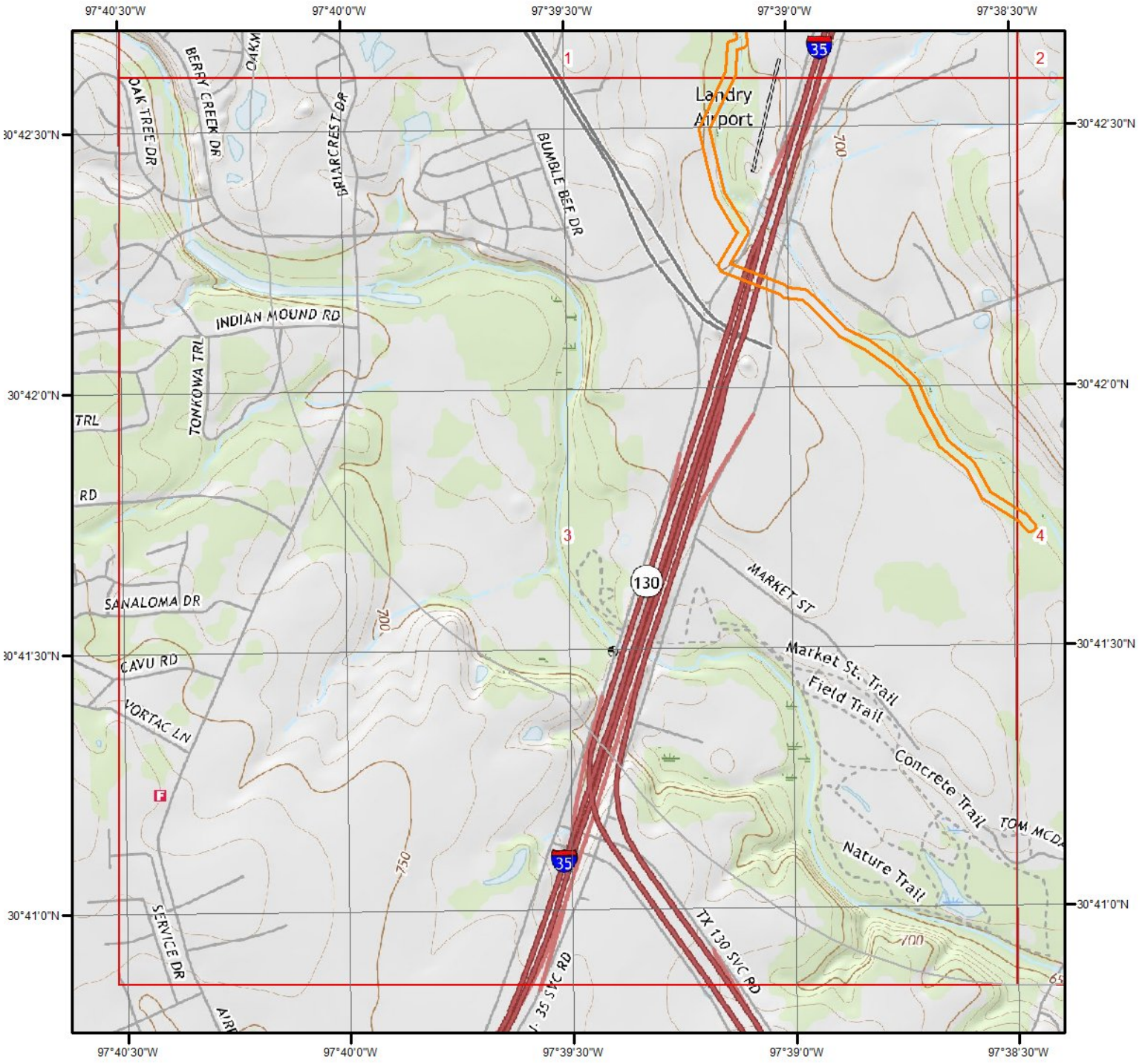

Current USGS Topo - Page 3

0 0.2 0.4 0.8 Miles

N

Quadrangle(s): Georgetown,TX

Source: USGS 7.5 Minute Topographic Map

Topographic Information

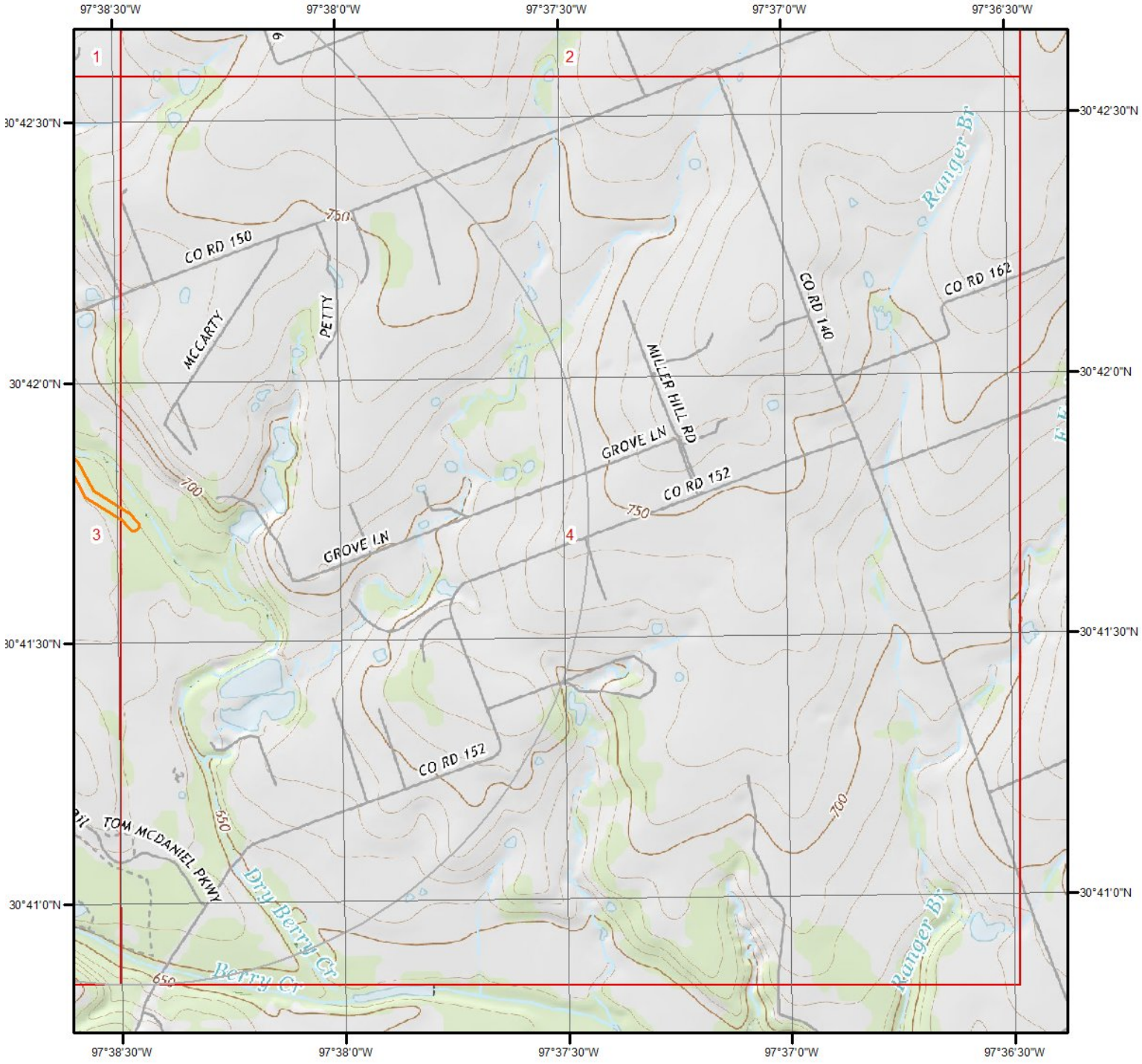

Current USGS Topo - Page 4

0 0.2 0.4 0.8 Miles

N

Quadrangle(s): Georgetown,TX; Weir,TX

Source: USGS 7.5 Minute Topographic Map

Topographic Information

The previous topographic map(s) are created by seamlessly merging and cutting current USGS topographic data. Below are shaded relief map(s), derived from USGS elevation data to show surrounding topography in further detail.

Topographic information at project property:

Elevation:	683.50 ft
Slope Direction:	ENE

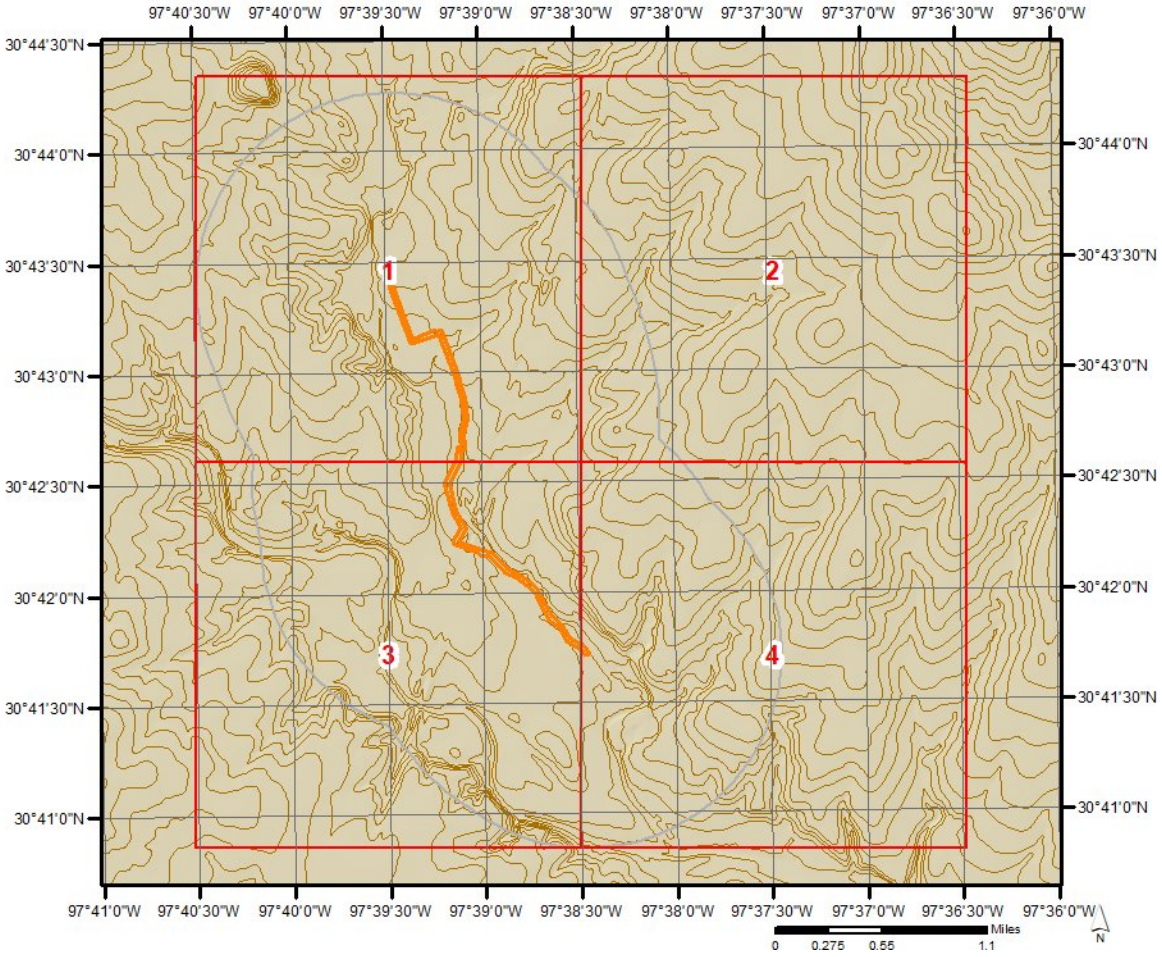

Topographic Information

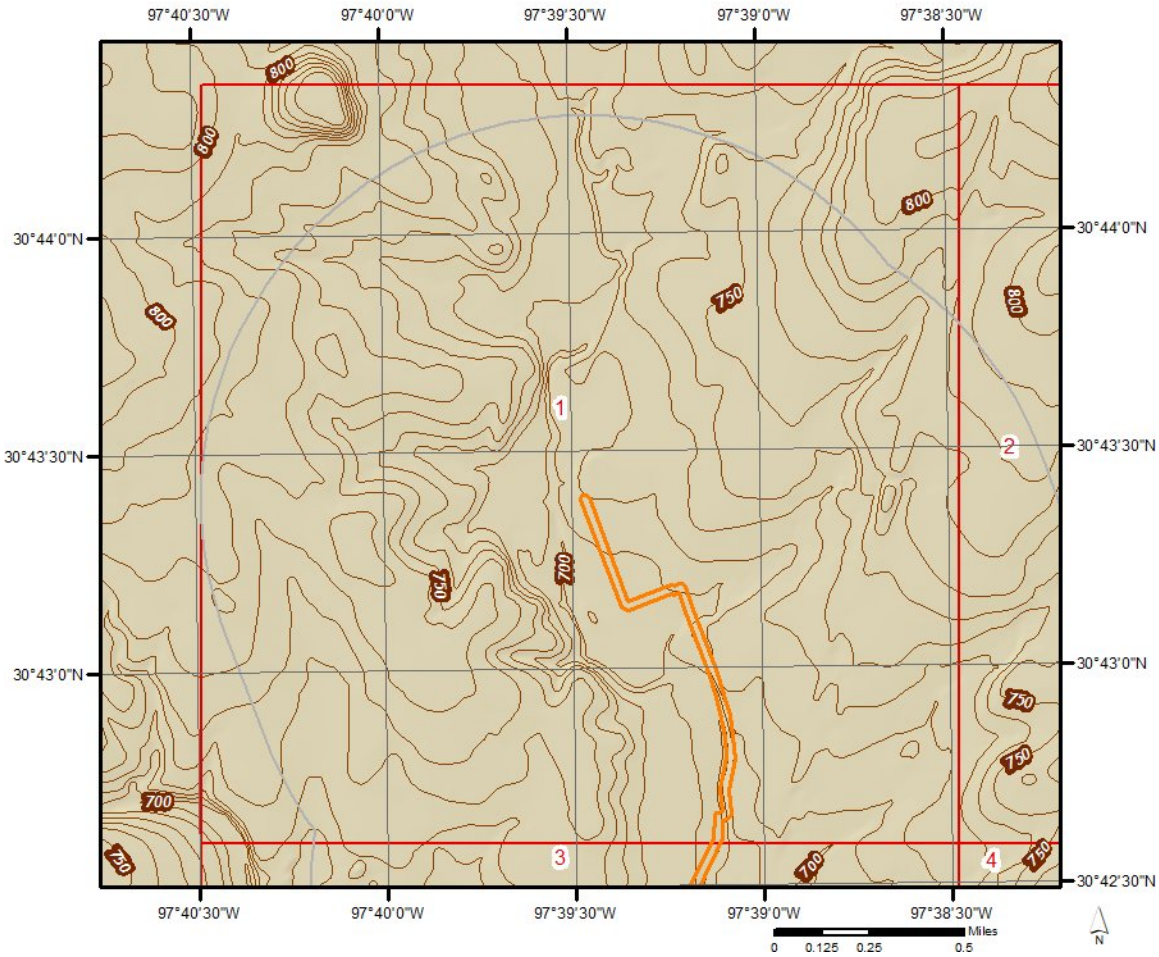

Topographic Information

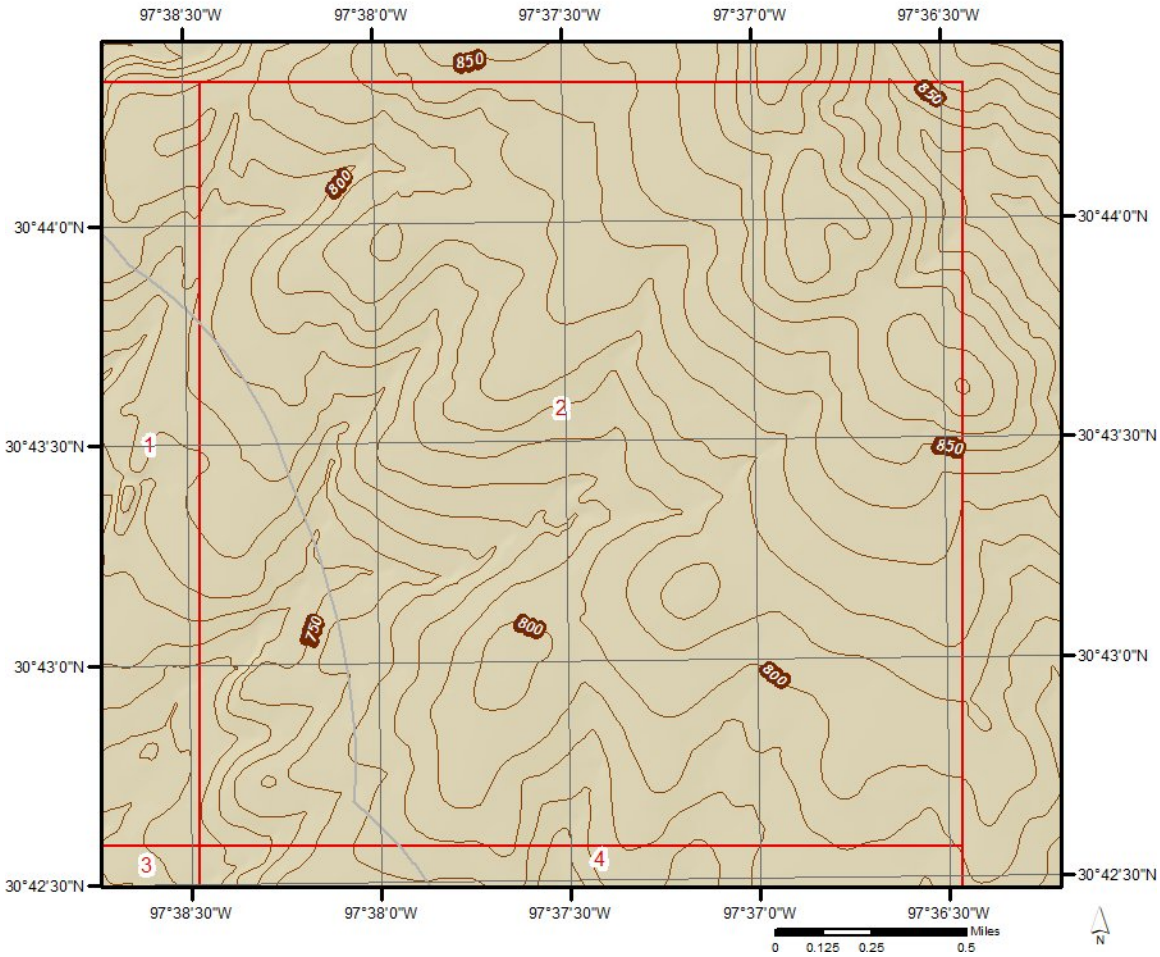

Topographic Information

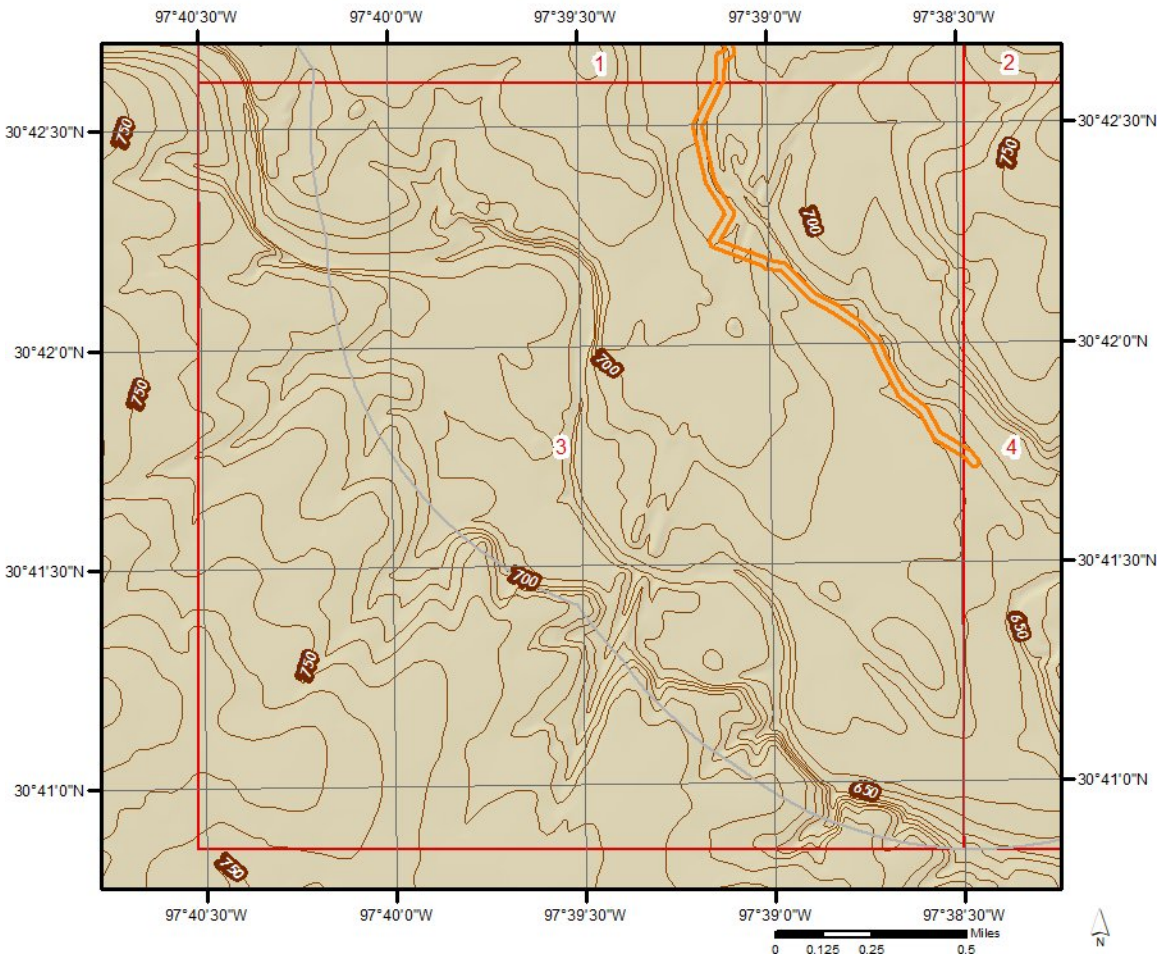

Topographic Information

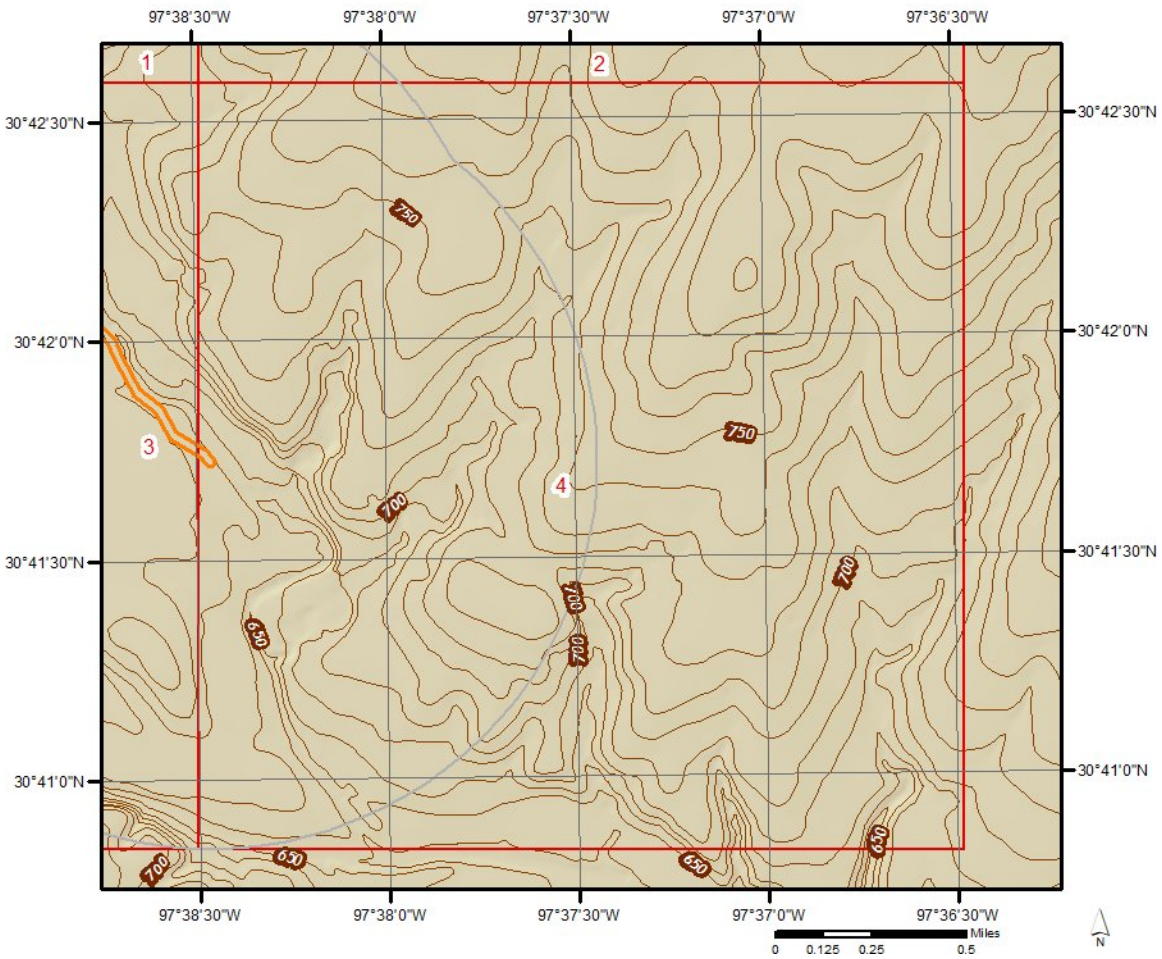

Hydrologic Information

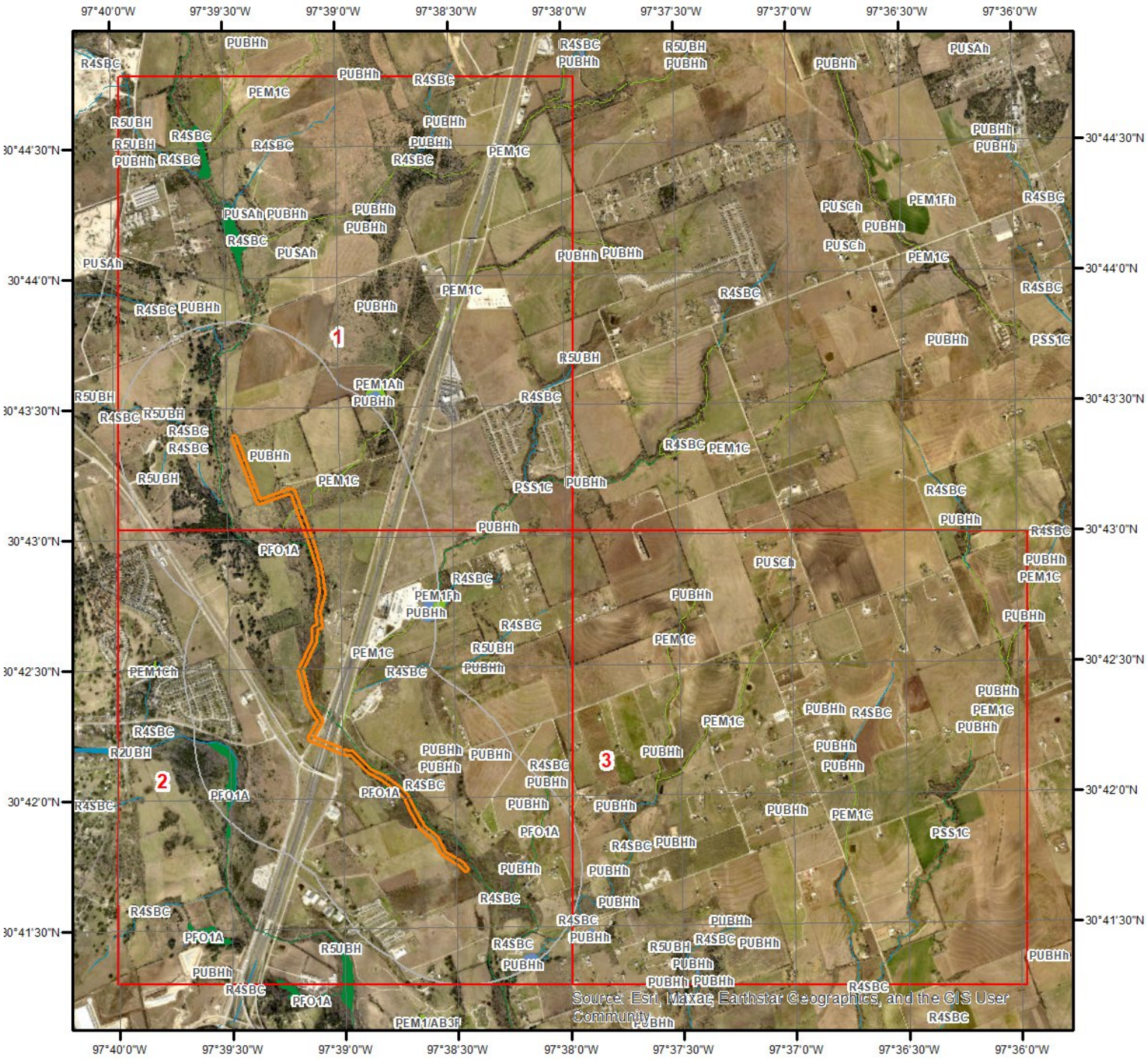

Wetland

0 0.275 0.55 1.1 Miles

N

This map shows wetland existence using data from US Fish & Wildlife.
Data coverage is shown to the right. Gray indicates no data available in the area.

- Estuarine and Marine Deepwater
- Estuarine and Marine Wetland
- Freshwater Emergent Wetland
- Freshwater Forested/Shrub Wetland
- Freshwater Pond
- Lake
- Other
- Riverine

ERIS

Hydrologic Information



Wetland Type - Page 1

0 0.125 0.25 0.5 Miles

N

This map shows wetland existence using data from US Fish & Wildlife.
Data coverage is shown to the right. Gray indicates no data available in the area.

- Estuarine and Marine Deepwater
- Estuarine and Marine Wetland
- Freshwater Emergent Wetland
- Freshwater Forested/Shrub Wetland
- Freshwater Pond
- Lake
- Other
- Riverine

ERIS

Hydrologic Information



Wetland Type - Page 2

Miles
0 0.125 0.25 0.5

N

This map shows wetland existence using data from US Fish & Wildlife.
Data coverage is shown to the right. Gray indicates no data available in the area.

- Estuarine and Marine Deepwater
- Estuarine and Marine Wetland
- Freshwater Emergent Wetland
- Freshwater Forested/Shrub Wetland
- Freshwater Pond
- Lake
- Other
- Riverine

ERIS

Hydrologic Information



Wetland Type - Page 3

Miles
0 0.125 0.25 0.5

N

This map shows wetland existence using data from US Fish & Wildlife.
Data coverage is shown to the right. Gray indicates no data available in the area.

- Estuarine and Marine Deepwater
- Estuarine and Marine Wetland
- Freshwater Emergent Wetland
- Freshwater Forested/Shrub Wetland
- Freshwater Pond
- Lake
- Other
- Riverine

ERIS

Hydrologic Information

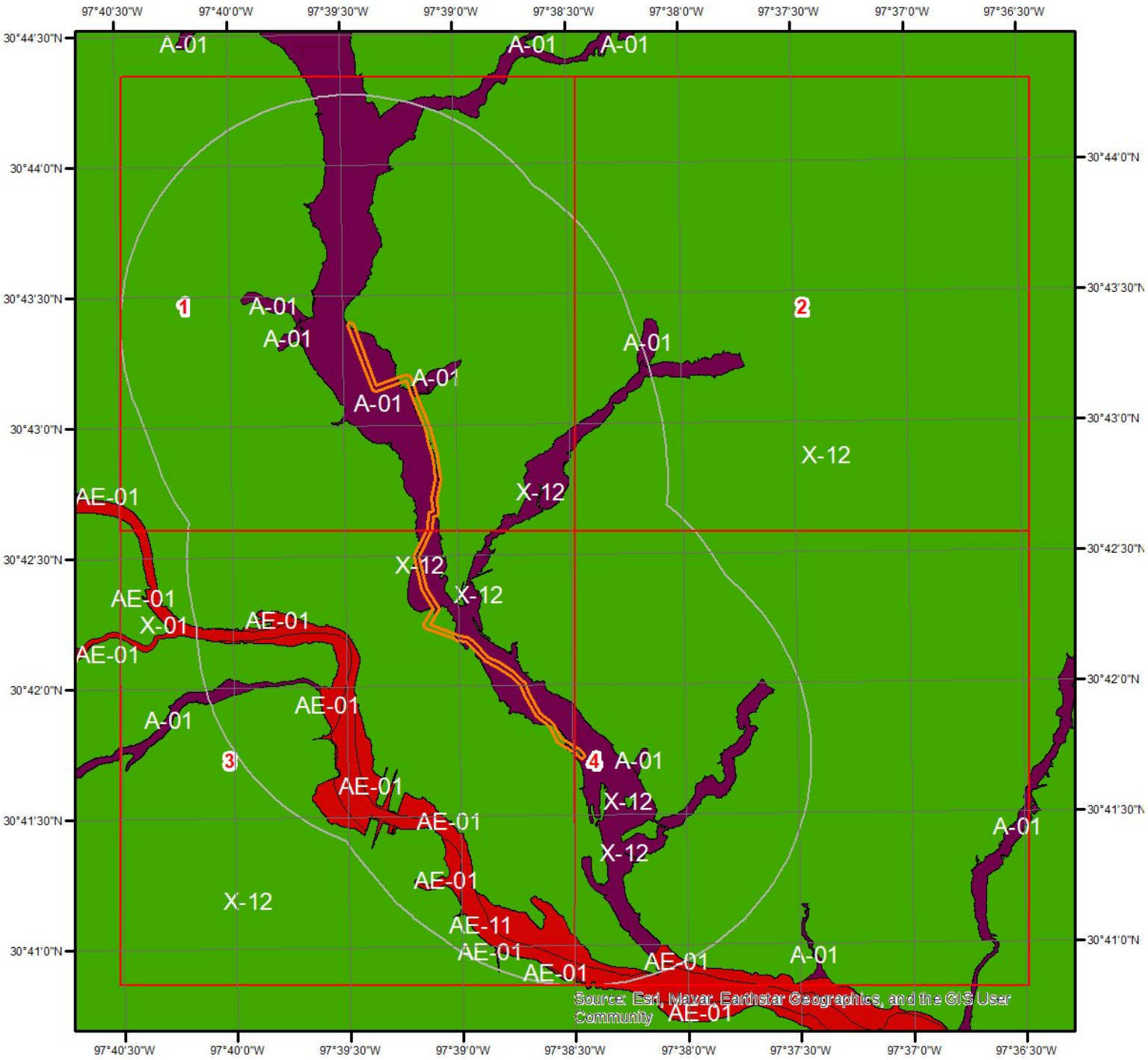

Flood Hazard Zones

This map shows FEMA flood hazard zones. FIRM panels are shown to the right, and blank indicates no data is available.

Miles
0 0.2 0.4 0.8

A	AO	X
A99	V	OPEN WATER
AE	VE	NOT POPULATED
AH	D	AREA NOT INCLUDED

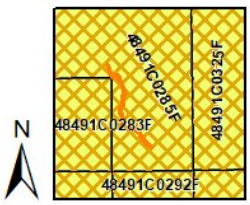

Quadrangle(s): Leander,TX; Cobbs Cavern,TX; Round Rock,TX; Georgetown,TX; Leander NE,TX; Jarrell,TX;

ERIS

Hydrologic Information

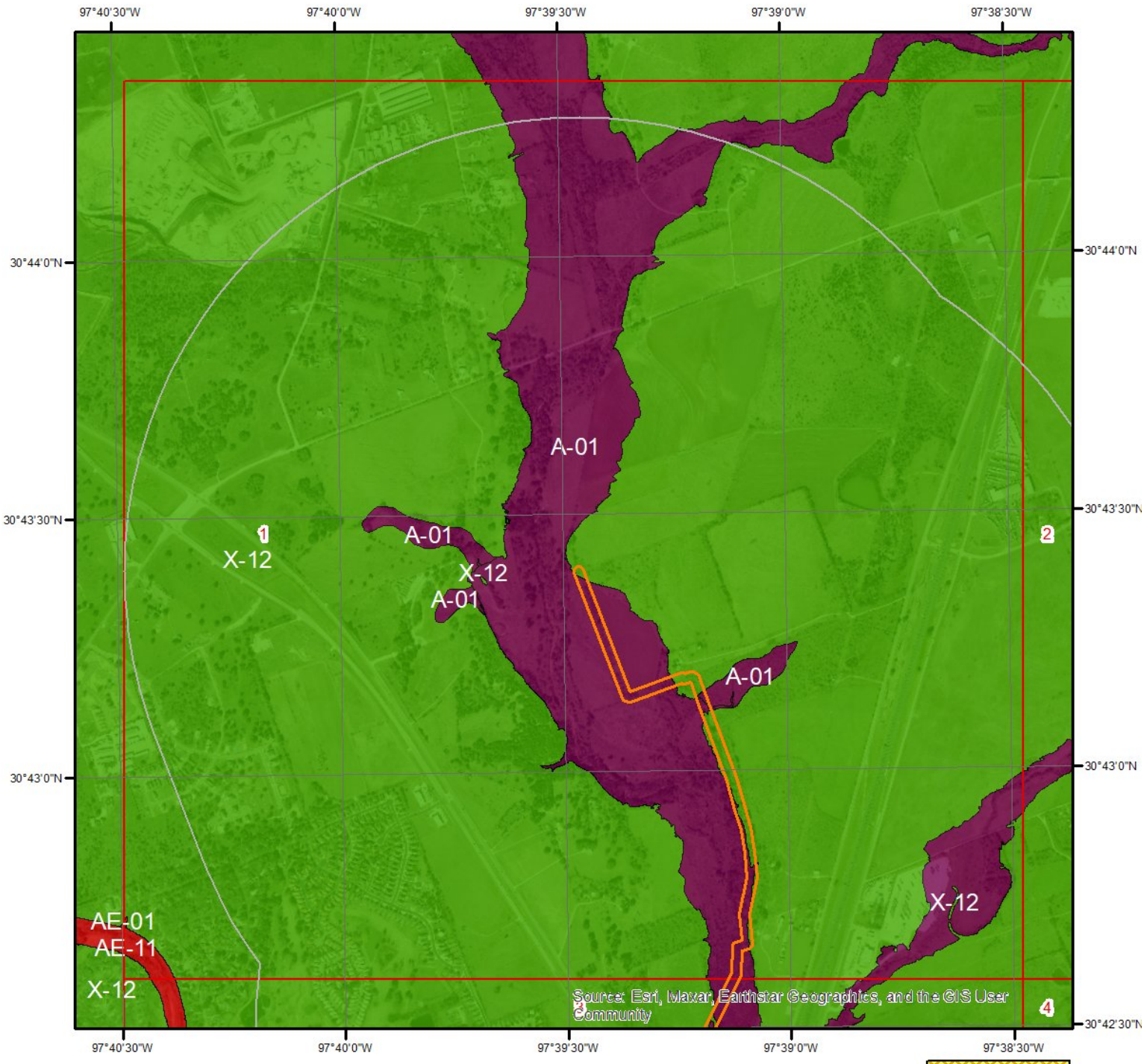

Flood Hazard Zones - Page 1

This map shows FEMA flood hazard zones. FIRM panels are shown to the right, and blank indicates no data is available.

Miles
0 0.2 0.4

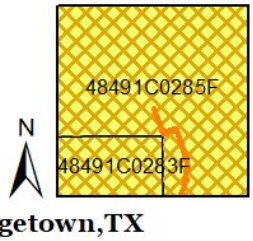

A	AO	X
A99	V	OPEN WATER
AE	VE	NOT POPULATED
AH	D	AREA NOT INCLUDED

Quadrangle(s): Georgetown,TX

ERIS

Hydrologic Information

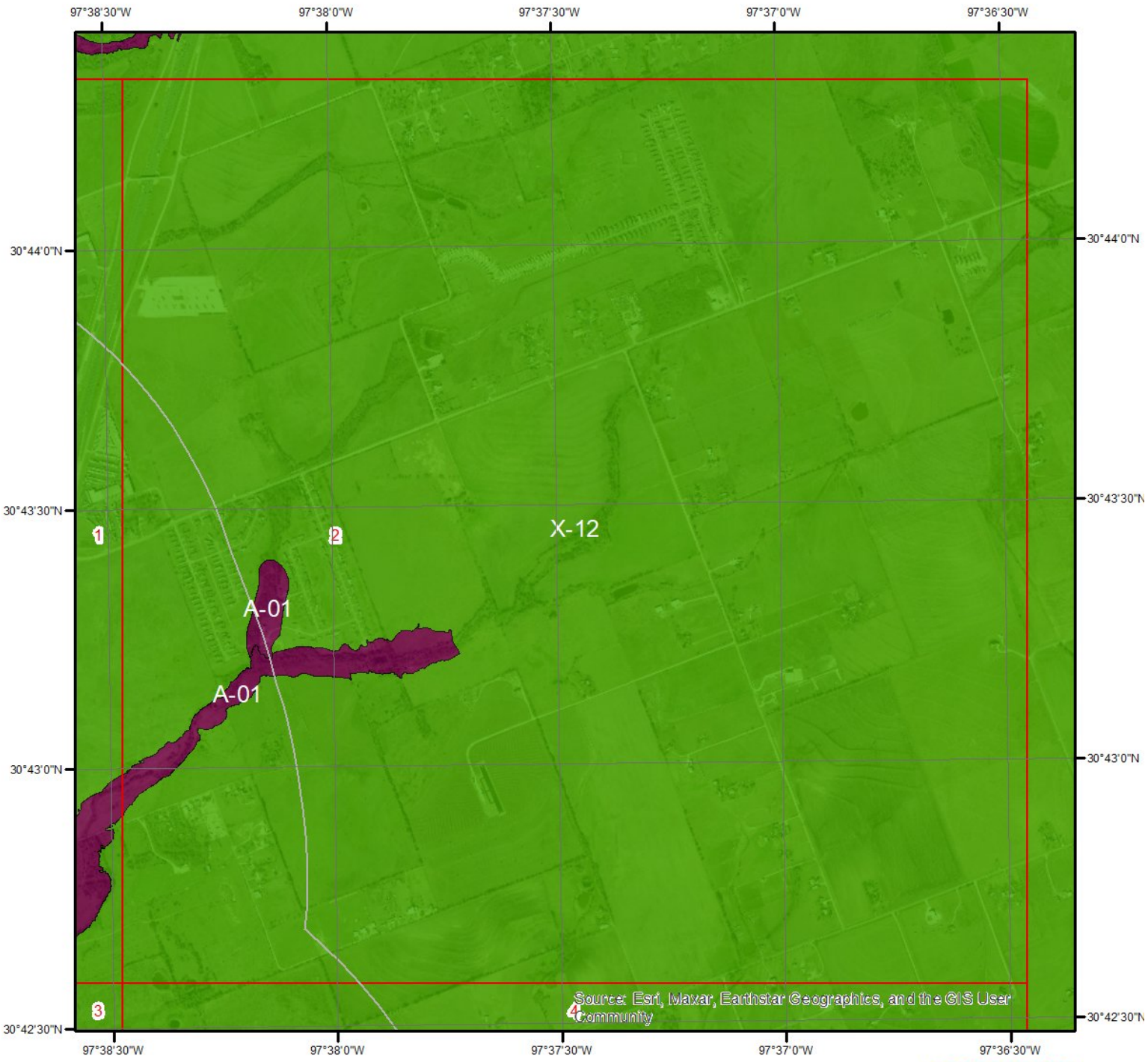

Flood Hazard Zones - Page 2

This map shows FEMA flood hazard zones. FIRM panels are shown to the right, and blank indicates no data is available.

Miles
0 0.2 0.4

N

48491C0285F
48491C0325F

Quadrangle(s): Georgetown,TX; Weir,TX

A	AO	X
A99	V	OPEN WATER
AE	VE	NOT POPULATED
AH	D	AREA NOT INCLUDED

ERIS

Hydrologic Information

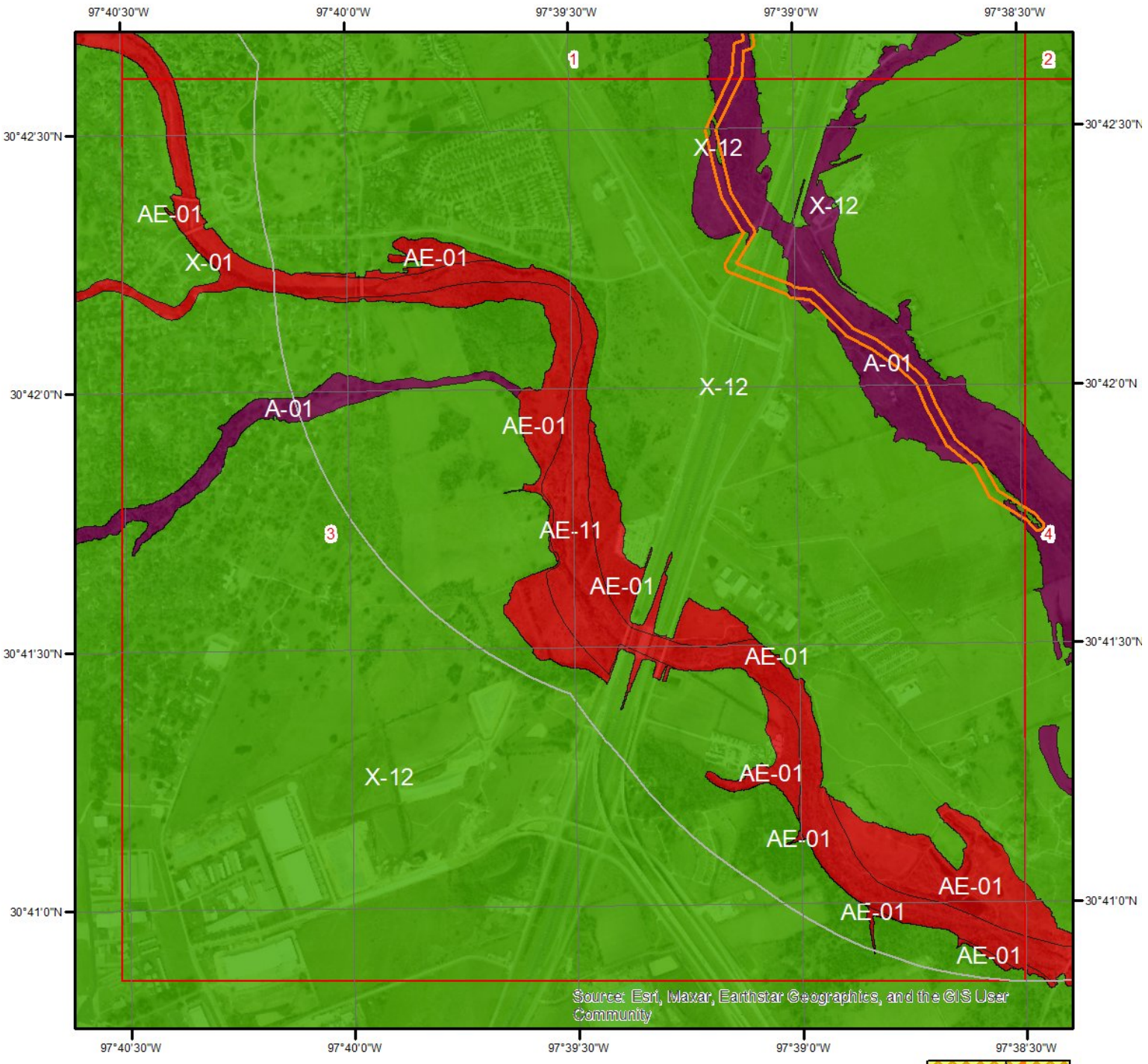

Flood Hazard Zones - Page 3

This map shows FEMA flood hazard zones. FIRM panels are shown to the right, and blank indicates no data is available.

Miles
0 0.2 0.4

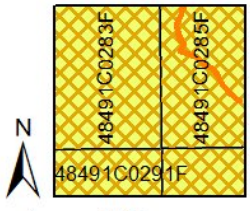

A	AO	X	
A99	V	OPEN WATER	
AE	VE	NOT POPULATED	
AH	D	AREA NOT INCLUDED	

Quadrangle(s): Georgetown,TX

ERIS

Hydrologic Information

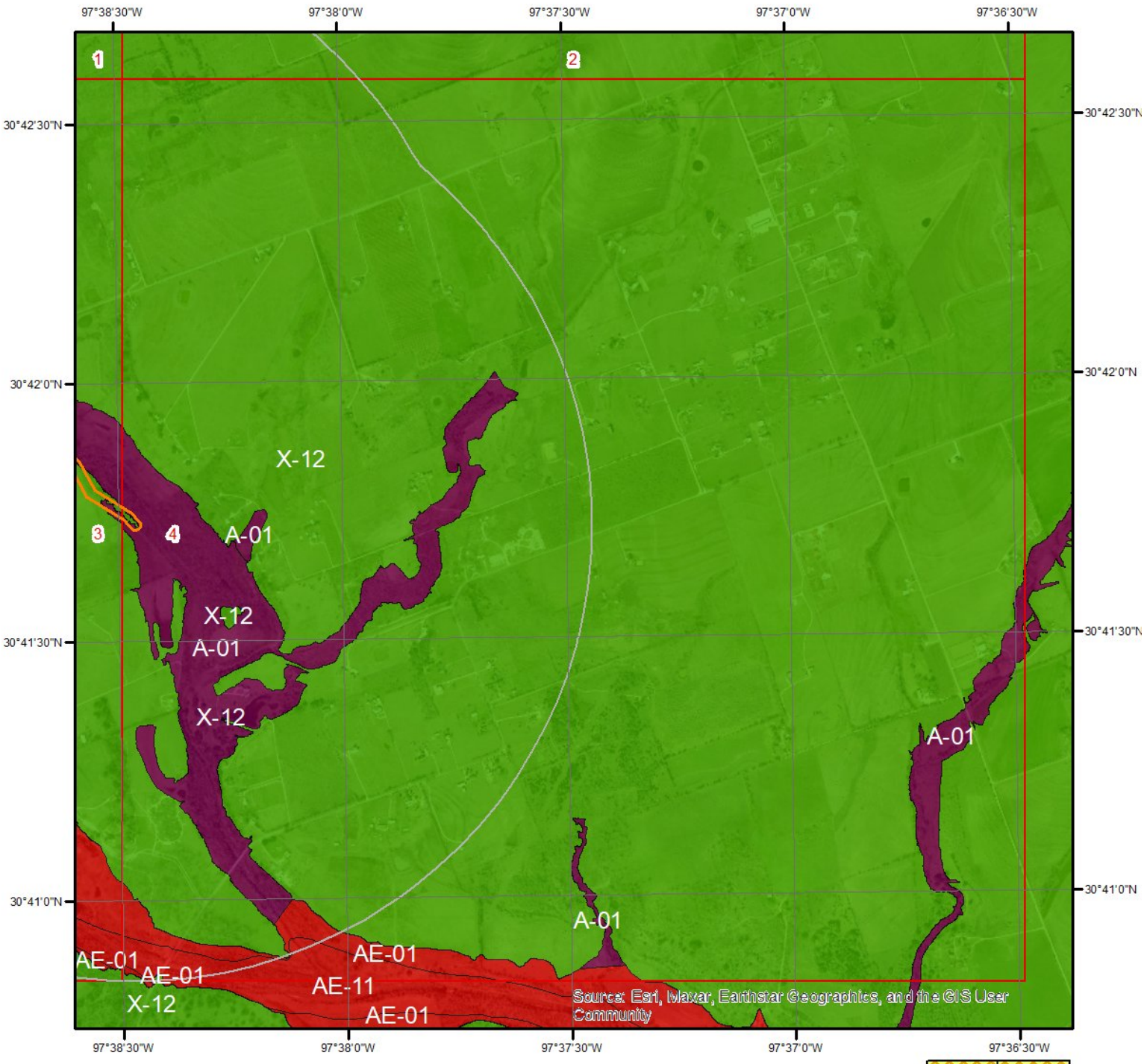

Flood Hazard Zones - Page 4

This map shows FEMA flood hazard zones. FIRM panels are shown to the right, and blank indicates no data is available.

Miles
0 0.2 0.4

N

48491C0285F
48491C0325F
48491C0315F

Quadrangle(s): Georgetown,TX; Weir,TX

A	AO	X
A99	V	OPEN WATER
AE	VE	NOT POPULATED
AH	D	AREA NOT INCLUDED

ERIS

Hydrologic Information

The Wetland Type map shows wetland existence overlaid on an aerial imagery. The Flood Hazard Zones map shows FEMA flood hazard zones overlaid on an aerial imagery. Relevant FIRM panels and detailed zone information is provided below.
For detailed Zone descriptions please click the link: https://floodadvocate.com/fema-zone-definitions

Available FIRM Panels in area:	48491C0292F(effective:2019-12-20) 48491C0283F(effective:2019-12-20) 48491C0285F(effective:2019-12-20) 48491C0325F(effective:2019-12-20)

Flood Zone A-01

Zone:	A
Zone subtype:	

Flood Zone AE-01

Zone:	AE
Zone subtype:	

Flood Zone AE-11

Zone:	AE
Zone subtype:	FLOODWAY

Flood Zone X-12

Zone:	X
Zone subtype:	AREA OF MINIMAL FLOOD HAZARD

Geologic Information

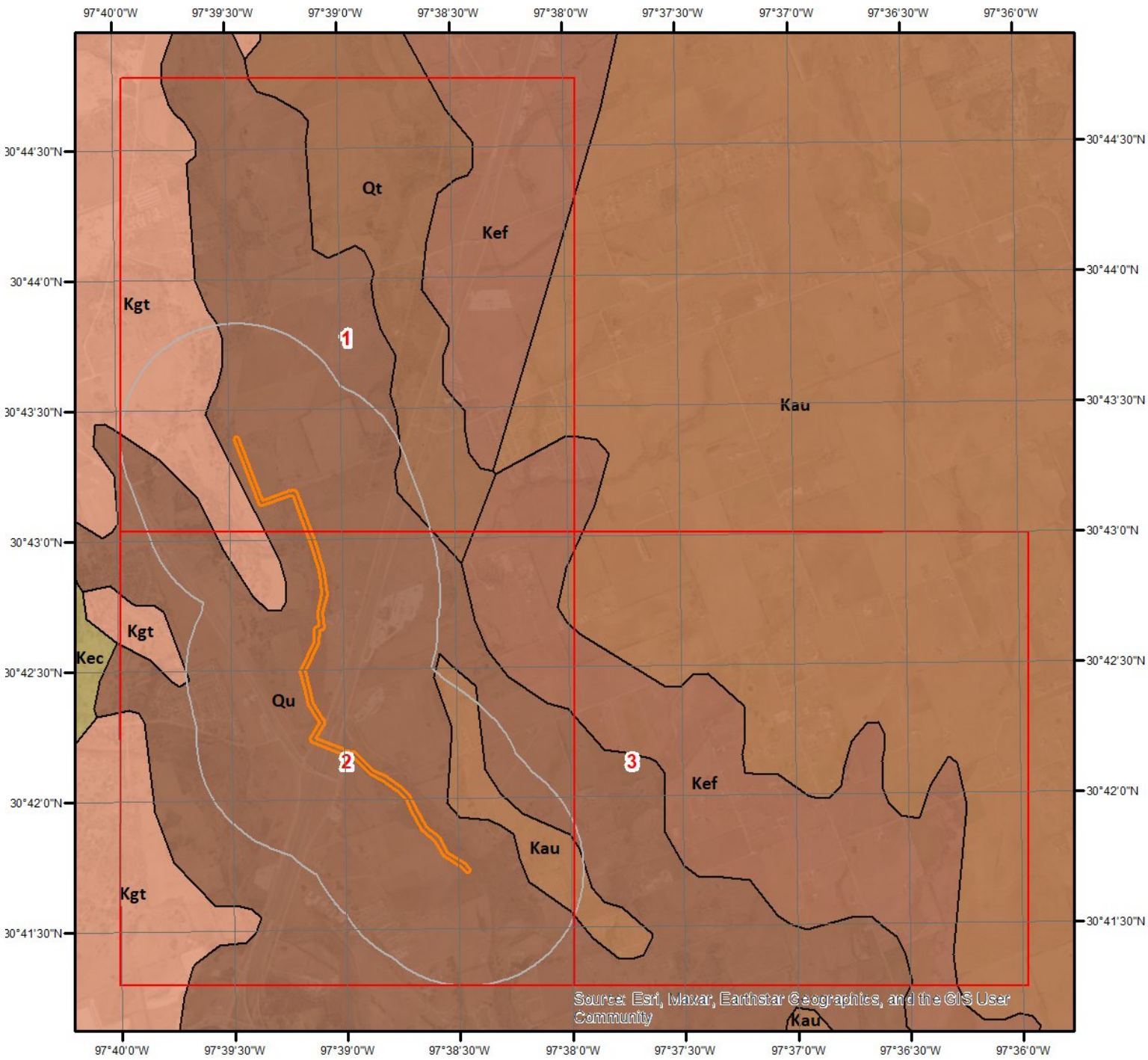

0 0.75 1.5 Miles

N

Geologic Units

This maps shows geologic units in the area. Please refer to the report for detailed descriptions.

ERIS

0 0.4 0.8 1.6 Miles

Geologic Information

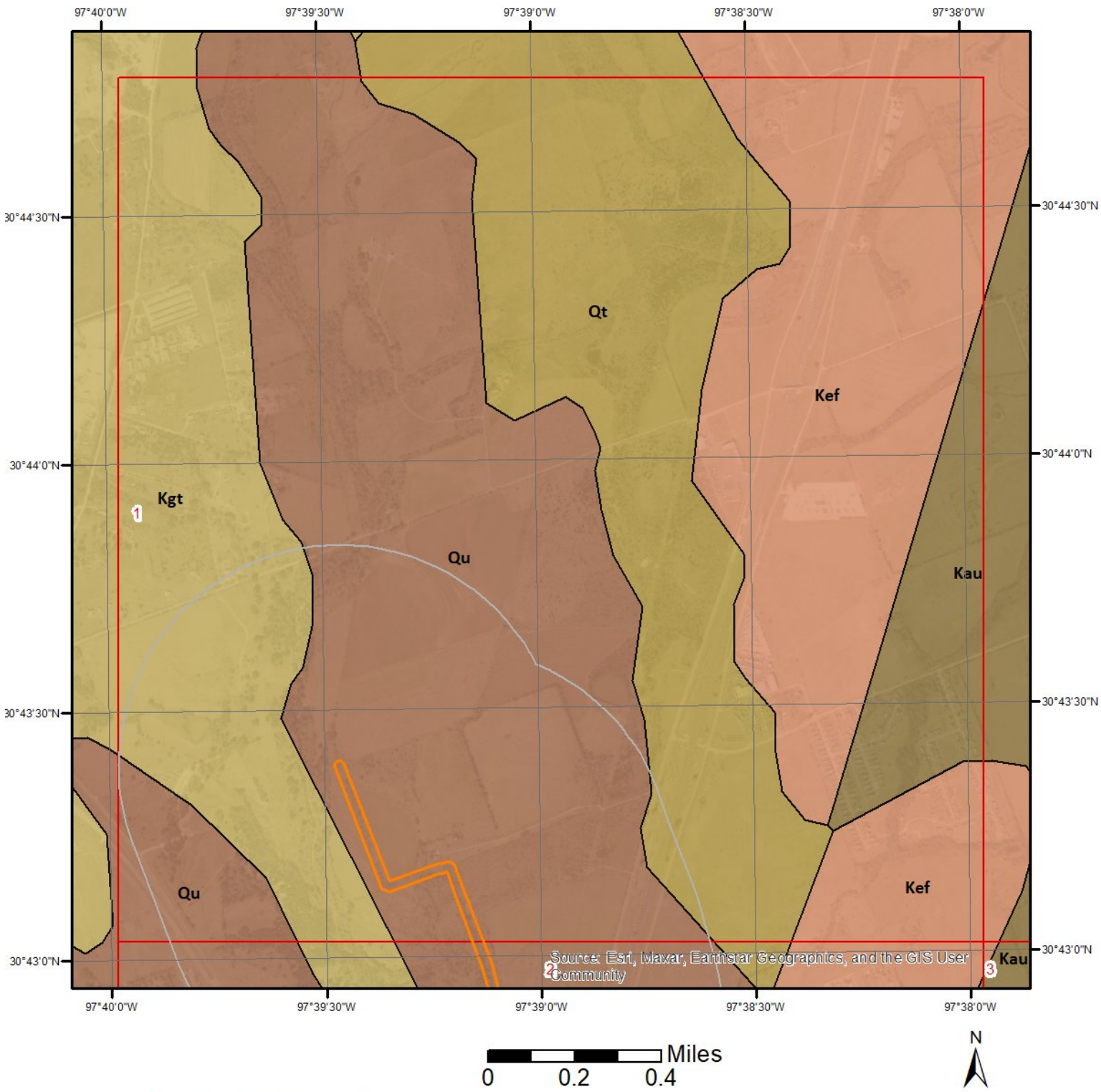

Geologic Units - Page 1

This maps shows geologic units in the area. Please refer to the report for detailed descriptions.

Geologic Information

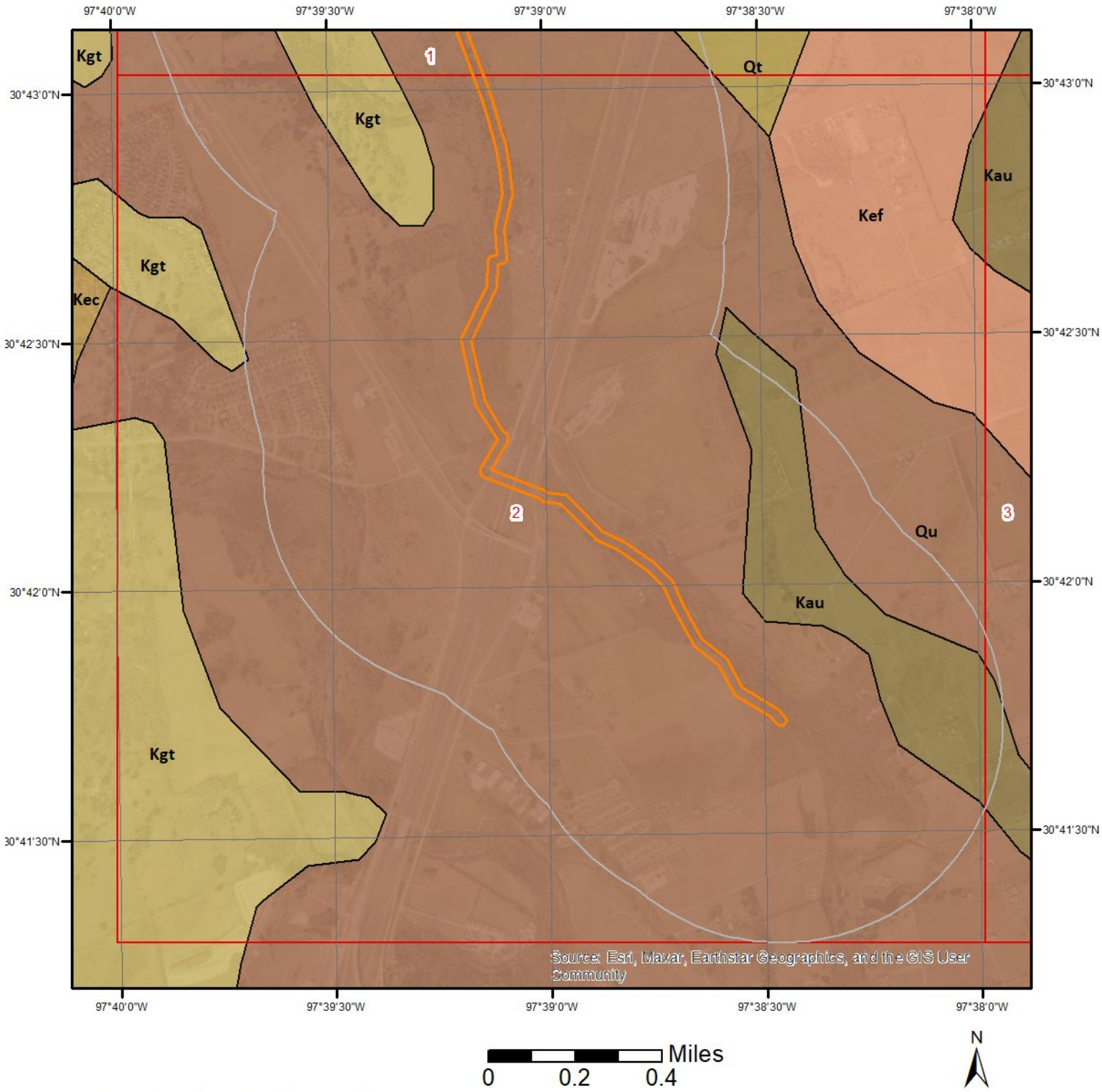

Geologic Units - Page 2

This maps shows geologic units in the area. Please refer to the report for detailed descriptions.

Geologic Information

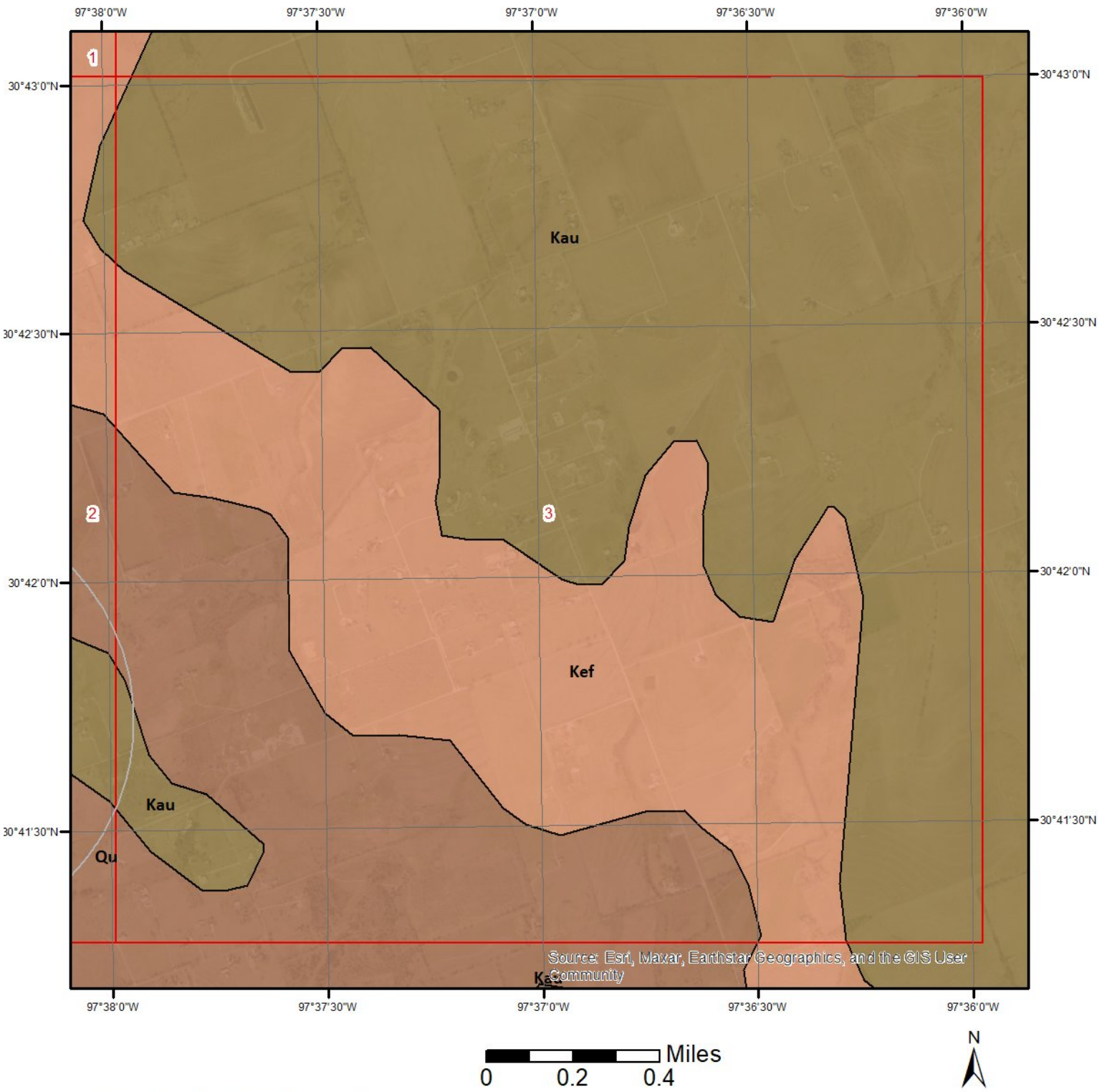

Geologic Units - Page 3

This maps shows geologic units in the area. Please refer to the report for detailed descriptions.

Geologic Information

The previous page shows USGS geology information. Detailed information about each unit is provided below.

Geologic Unit Kgt

Unit Name:	Georgetown Limestone
Unit Age:	Phanerozoic | Mesozoic | Cretaceous-Early
Primary Rock Type:	limestone
Secondary Rock Type:	mudstone
Unit Description:	Georgetown Limestone

Geologic Unit Qt

Unit Name:	Terrace deposits
Unit Age:	Phanerozoic | Cenozoic | Quaternary | Pleistocene Holocene
Primary Rock Type:	terrace
Secondary Rock Type:	sand
Unit Description:	Terrace deposits

Geologic Unit Qu

Unit Name:	Quaternary deposit, undivided
Unit Age:	Phanerozoic | Cenozoic | Quaternary
Primary Rock Type:	sand
Secondary Rock Type:	silt
Unit Description:	sand, silt, clay, and gravel. locally indurated with calcium carbonate (caliche); includes point bar, natural levee, stream channel, sand dune, terrace, alluvial fan, landslide bolson and playa deposits

Geologic Unit Kgt

Unit Name:	Georgetown Limestone
Unit Age:	Phanerozoic | Mesozoic | Cretaceous-Early
Primary Rock Type:	limestone
Secondary Rock Type:	mudstone
Unit Description:	Georgetown Limestone

Geologic Unit Kau

Unit Name:	Austin Chalk
Unit Age:	Phanerozoic | Mesozoic | Cretaceous-Late [Gulfian]
Primary Rock Type:	limestone
Secondary Rock Type:	mudstone
Unit Description:	Austin Chalk

Soil Information

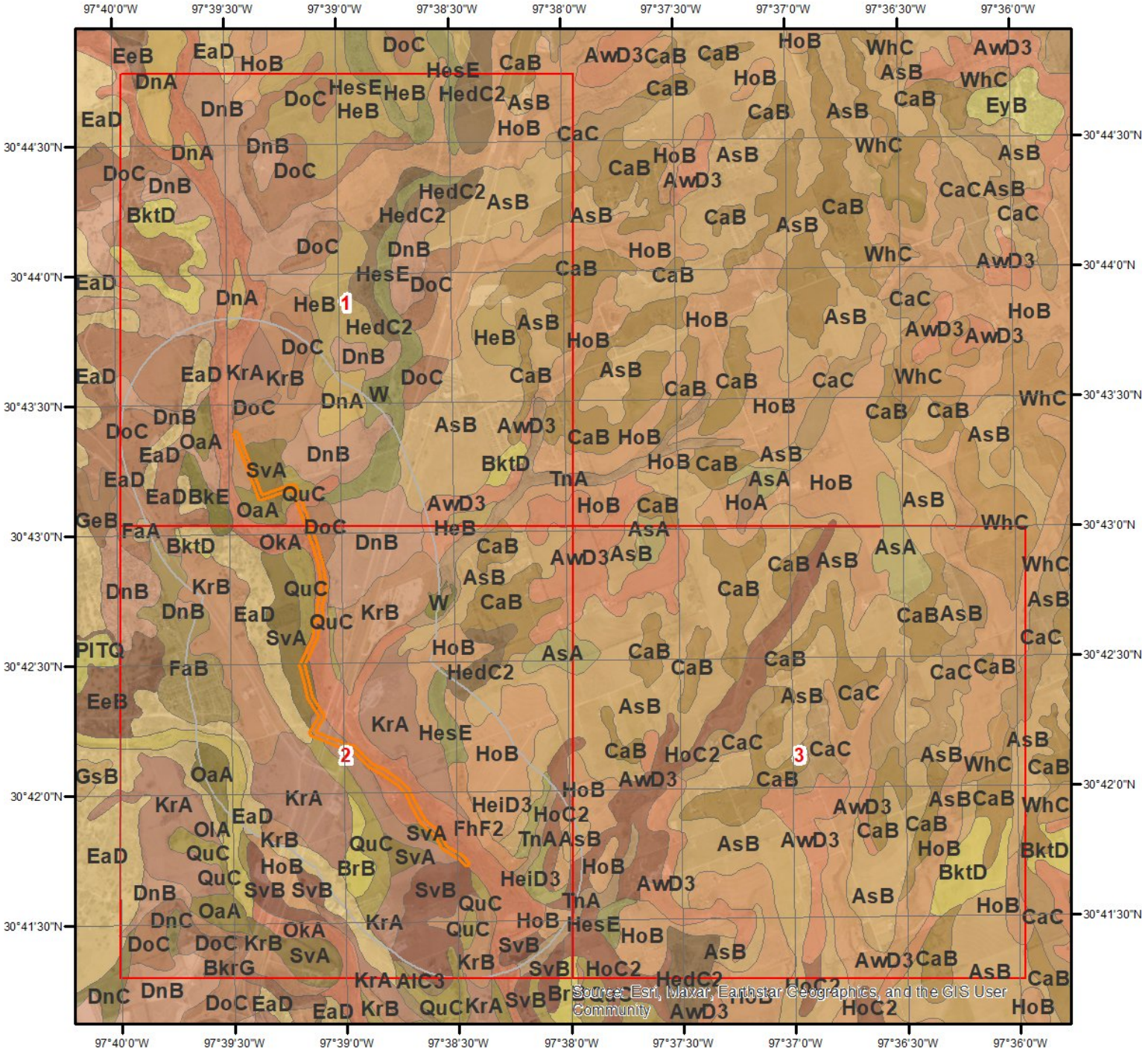

SSURGO Soils

0 0.2 0.4 0.8 1.2 Miles

N

This maps shows SSURGO soil units around the target property. Please refer to the report for detailed soil descriptions.

ERIS

Soil Information

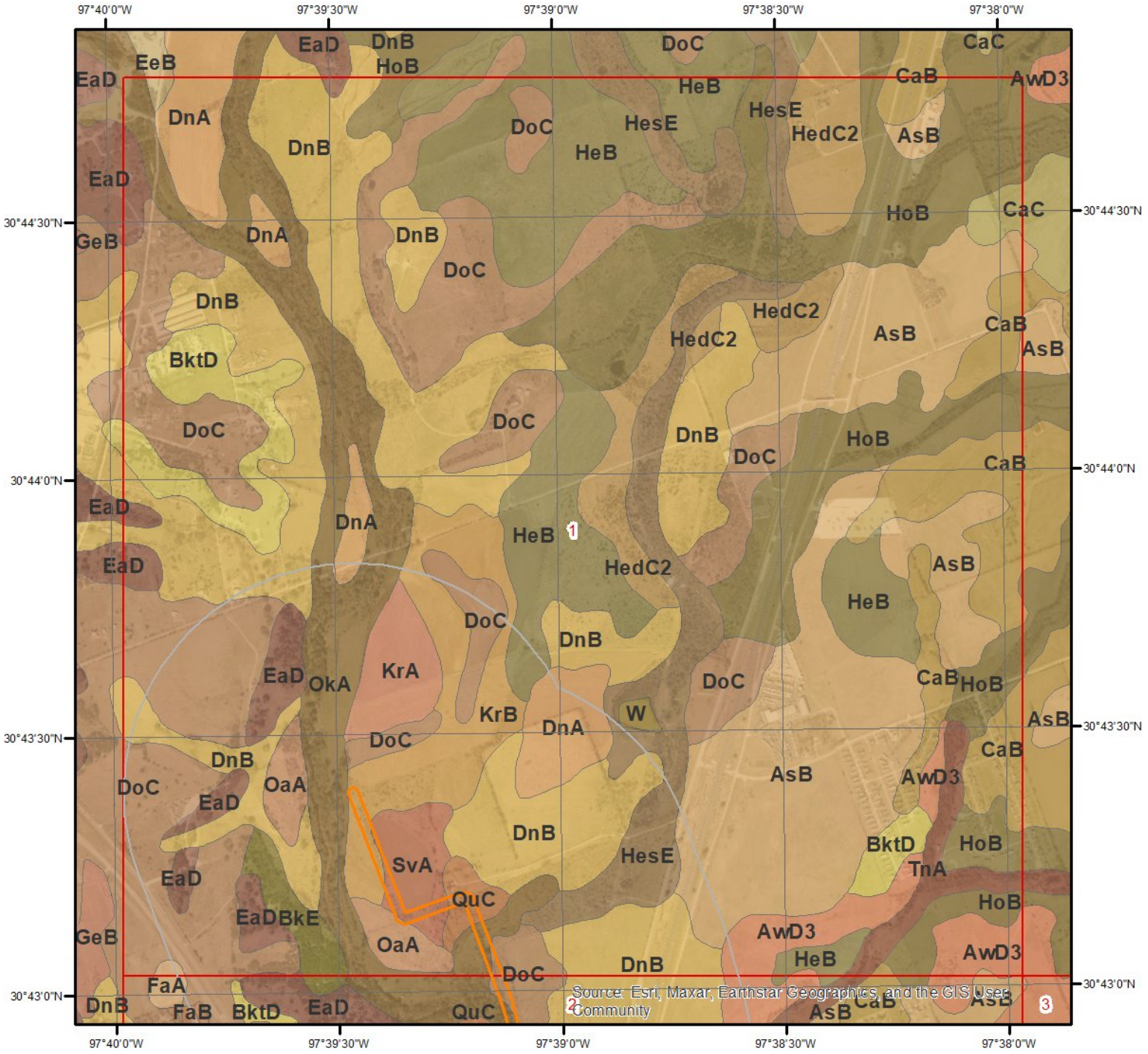

SSURGO Soils - Page 1

0 0.2 0.4 Miles

N

This maps shows SSURGO soil units around the target property. Please refer to the report for detailed soil descriptions.

ERIS

Soil Information

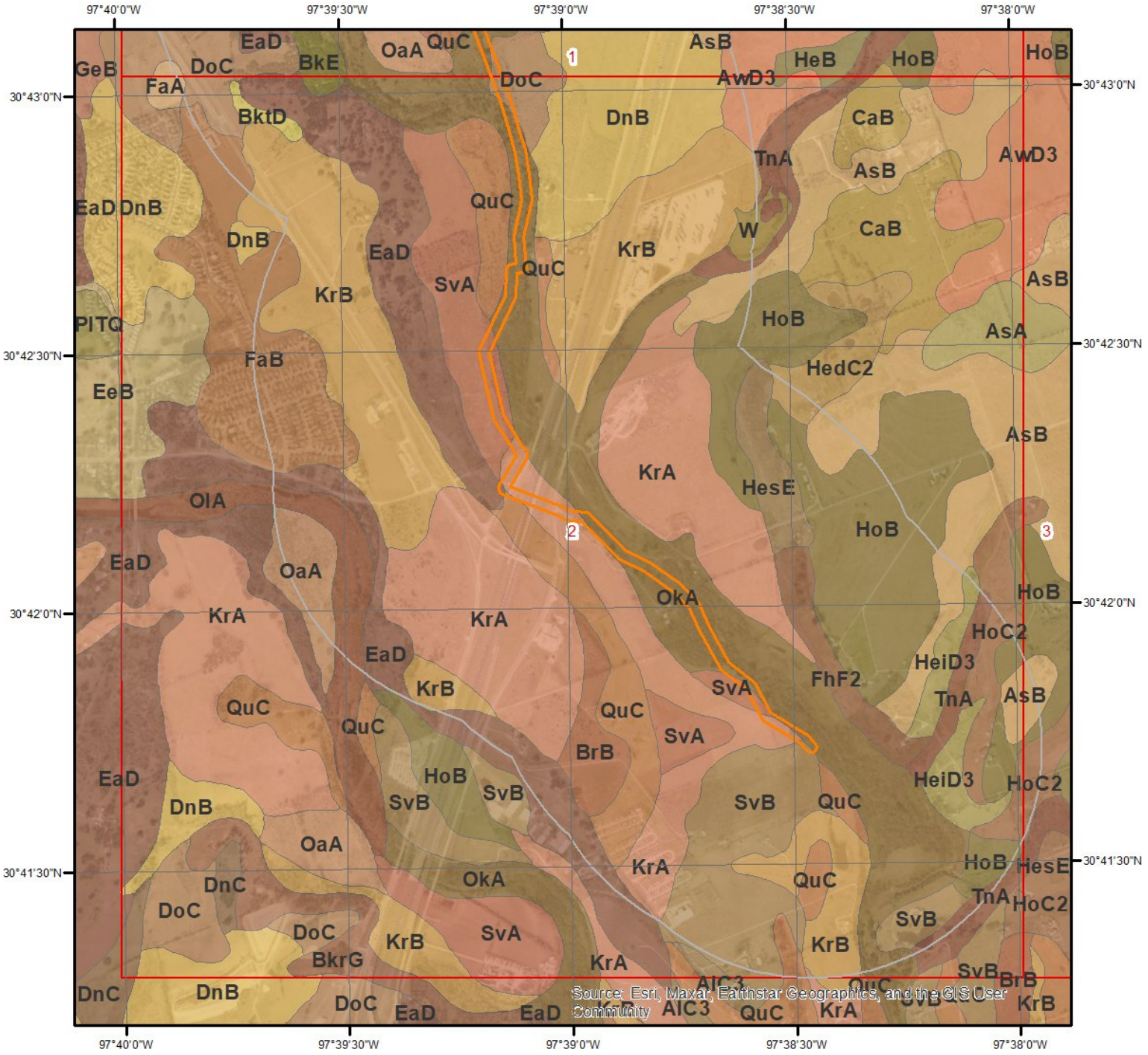

SSURGO Soils - Page 2

0 0.2 0.4 Miles

N

This maps shows SSURGO soil units around the target property. Please refer to the report for detailed soil descriptions.

ERIS

Soil Information

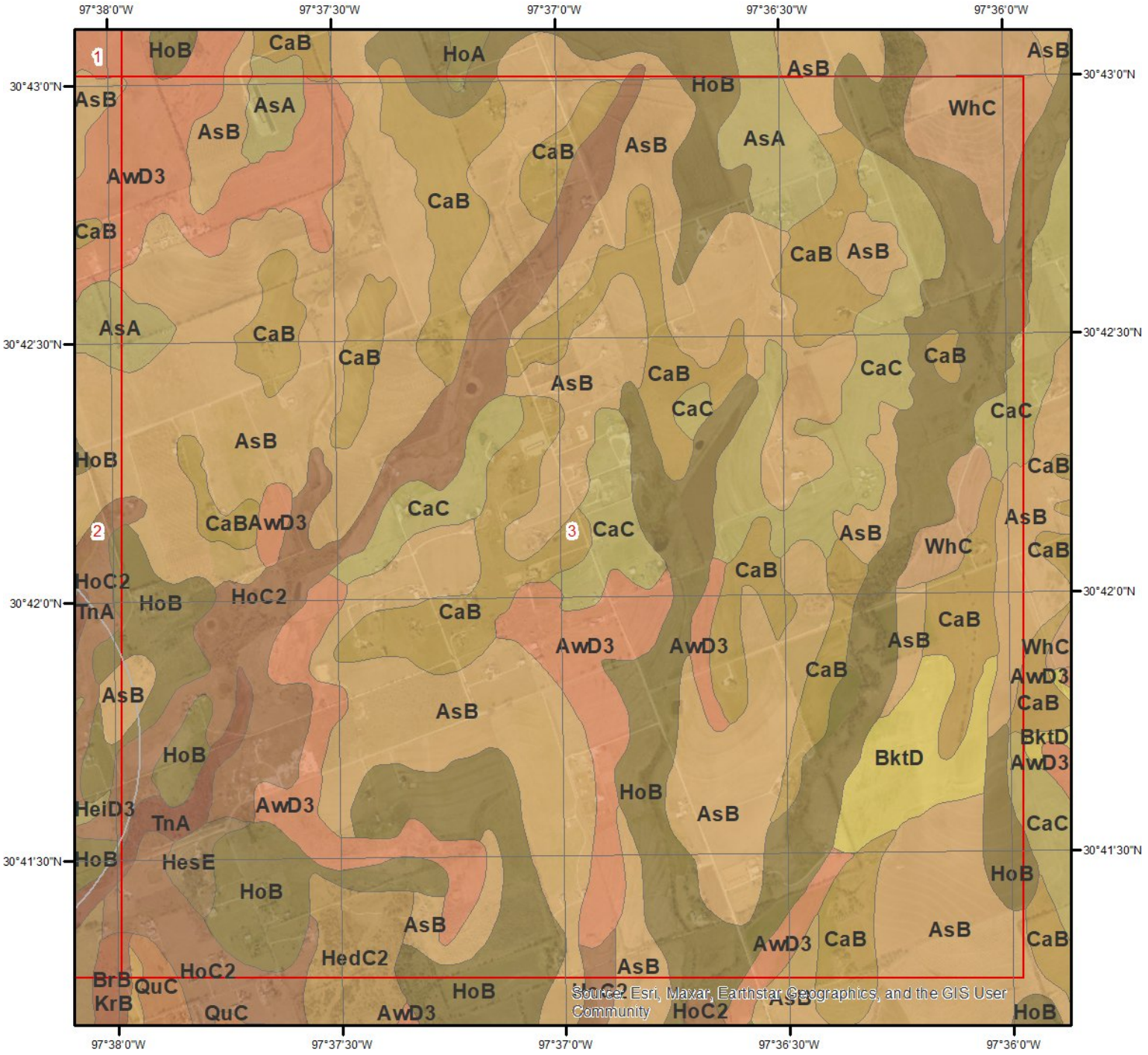

SSURGO Soils - Page 3

0 0.2 0.4 Miles

N

This maps shows SSURGO soil units around the target property. Please refer to the report for detailed soil descriptions.

ERIS

Soil Information

The previous page shows a soil map using SSURGO data from USDA Natural Resources Conservation Service. Detailed information about each unit is provided below.

Map Unit AsB (10.37%)

Map Unit Name:	Austin silty clay, 1 to 3 percent slopes
Bedrock Depth - Min:	74cm
Watertable Depth - Annual Min:	
Drainage Class - Dominant:	Well drained
Hydrologic Group - Dominant:	D - Soils in this group have high runoff potential when thoroughly wet. Water movement through the soil is restricted or very restricted.

Major components are printed below

Austin(90%)

horizon Ap(0cm to 41cm)	Silty clay
horizon Bw(41cm to 56cm)	Silty clay
horizon Bk(56cm to 74cm)	Silty clay
horizon Cr(74cm to 144cm)	Bedrock

Component Description:

Minor map unit components are excluded from this report.

Map Unit: AsB - Austin silty clay, 1 to 3 percent slopes

Component: Austin (90%)
The Austin component makes up 90 percent of the map unit. Slopes are 1 to 3 percent. This component is on ridges on dissected plains. The parent material consists of residuum weathered from chalk. Depth to a root restrictive layer, bedrock, paralithic, is 22 to 39 inches. The natural drainage class is well drained. Water movement in the most restrictive layer is low. Available water to a depth of 60 inches (or restricted depth) is low. Shrink-swell potential is moderate. This soil is not flooded. It is not ponded. There is no zone of water saturation within a depth of 72 inches. Organic matter content in the surface horizon is about 3 percent. This component is in the R086AY007TX Southern Clay Loam ecological site. Nonirrigated land capability classification is 3e. This soil does not meet hydric criteria. The calcium carbonate equivalent within 40 inches, typically, does not exceed 80 percent. There are no saline horizons within 30 inches of the soil surface.

Component: Houston Black (10%)
Generated brief soil descriptions are created for major soil components. The Houston Black soil is a minor component.

Map Unit AwD3 (0.68%)

Map Unit Name:	Austin-Whitewright complex, 2 to 6 percent slopes, eroded
Bedrock Depth - Min:	41cm
Watertable Depth - Annual Min:	
Drainage Class - Dominant:	Well drained
Hydrologic Group - Dominant:	D - Soils in this group have high runoff potential when thoroughly wet. Water movement through the soil is restricted or very restricted.

Major components are printed below

Austin(55%)

horizon Ap(0cm to 41cm)	Silty clay
horizon Bw(41cm to 56cm)	Silty clay
horizon Bk(56cm to 74cm)	Silty clay
horizon Cr(74cm to 144cm)	Bedrock

Whitewright(35%)

horizon Ap(0cm to 15cm)	Silty clay loam
horizon Bk(15cm to 41cm)	Silty clay loam
horizon Cr(41cm to 86cm)	Bedrock

Soil Information

Component Description:

Minor map unit components are excluded from this report.

Map Unit: AwD3 - Austin-Whitewright complex, 2 to 6 percent slopes, eroded

Component: Austin (55%)
The Austin, moderately eroded component makes up 55 percent of the map unit. Slopes are 2 to 6 percent. This component is on ridges on dissected plains. The parent material consists of calcareous clayey residuum weathered from chalk. Depth to a root restrictive layer, bedrock, paralithic, is 16 to 40 inches. The natural drainage class is well drained. Water movement in the most restrictive layer is low. Available water to a depth of 60 inches (or restricted depth) is low. Shrink-swell potential is moderate. This soil is not flooded. It is not ponded. There is no zone of water saturation within a depth of 72 inches. Organic matter content in the surface horizon is about 3 percent. This component is in the R086AY007TX Southern Clay Loam ecological site. Nonirrigated land capability classification is 3s. This soil does not meet hydric criteria. The calcium carbonate equivalent within 40 inches, typically, does not exceed 80 percent. There are no saline horizons within 30 inches of the soil surface.

Component: Whitewright (35%)
The Whitewright, severely eroded component makes up 35 percent of the map unit. Slopes are 2 to 6 percent. This component is on ridges on dissected plains. The parent material consists of residuum weathered from Austin chalk formation. Depth to a root restrictive layer, bedrock, paralithic, is 11 to 28 inches. The natural drainage class is well drained. Water movement in the most restrictive layer is low. Available water to a depth of 60 inches (or restricted depth) is very low. Shrink-swell potential is moderate. This soil is not flooded. It is not ponded. There is no zone of water saturation within a depth of 72 inches. Organic matter content in the surface horizon is about 1 percent. This component is in the R086AY002TX Southern Chalky Ridge ecological site. Nonirrigated land capability classification is 4s. This soil does not meet hydric criteria. The calcium carbonate equivalent within 40 inches, typically, does not exceed 55 percent. There are no saline horizons within 30 inches of the soil surface.

Component: Houston Black (10%)
Generated brief soil descriptions are created for major soil components. The Houston Black soil is a minor component.

Map Unit BkE (0.33%)

Map Unit Name:	Brackett gravelly clay loam, 3 to 12 percent slopes
Bedrock Depth - Min:	41cm
Watertable Depth - Annual Min:	
Drainage Class - Dominant:	Well drained
Hydrologic Group - Dominant:	D - Soils in this group have high runoff potential when thoroughly wet. Water movement through the soil is restricted or very restricted.

Major components are printed below

Brackett(92%)

horizon A(0cm to 13cm)	Gravelly clay loam
horizon Bk(13cm to 41cm)	Clay loam
horizon Cr(41cm to 152cm)	Bedrock

Component Description:

Minor map unit components are excluded from this report.

Map Unit: BkE - Brackett gravelly clay loam, 3 to 12 percent slopes

Component: Brackett (92%)
The Brackett component makes up 92 percent of the map unit. Slopes are 3 to 12 percent. This component is on ridges on dissected plateaus. The parent material consists of residuum weathered from limestone. Depth to a root restrictive layer, bedrock, paralithic, is 6 to 20 inches. The natural drainage class is well drained. Water movement in the most restrictive layer is moderately low. Available water to a depth of 60 inches (or restricted depth) is very low. Shrink-swell potential is low. This soil is not flooded. It is not ponded. There is no zone of water saturation within a depth of 72 inches. Organic matter content in the surface horizon is about 2 percent. This component is in the R081CY355TX Adobe 29-35 Pz ecological site. Nonirrigated land capability classification is 6e. This soil does not meet hydric criteria. The calcium carbonate equivalent within 40 inches, typically, does not exceed 65 percent. There are no saline horizons within 30 inches of the soil surface.

Component: Sunev (6%)
Generated brief soil descriptions are created for major soil components. The Sunev soil is a minor component.

Soil Information

Component: Austin (2%)
Generated brief soil descriptions are created for major soil components. The Austin soil is a minor component.

Map Unit BktD (0.07%)

Map Unit Name:	Brackett association, 1 to 8 percent slopes
Bedrock Depth - Min:	36cm
Watertable Depth - Annual Min:	
Drainage Class - Dominant:	Well drained
Hydrologic Group - Dominant:	D - Soils in this group have high runoff potential when thoroughly wet. Water movement through the soil is restricted or very restricted.

Major components are printed below

Brackett(87%)

horizon A(0cm to 13cm)	Clay loam
horizon Bk(13cm to 36cm)	Clay loam
horizon Cr(36cm to 152cm)	Bedrock

Component Description:

Minor map unit components are excluded from this report.

Map Unit: BktD - Brackett association, 1 to 8 percent slopes

Component: Brackett (87%)
The Brackett component makes up 87 percent of the map unit. Slopes are 1 to 8 percent. This component is on ridges on dissected plateaus. The parent material consists of residuum weathered from limestone. Depth to a root restrictive layer, bedrock, paralithic, is 5 to 20 inches. The natural drainage class is well drained. Water movement in the most restrictive layer is moderately low. Available water to a depth of 60 inches (or restricted depth) is very low. Shrink-swell potential is low. This soil is not flooded. It is not ponded. There is no zone of water saturation within a depth of 72 inches. Organic matter content in the surface horizon is about 2 percent. This component is in the R081CY355TX Adobe 29-35 Pz ecological site. Nonirrigated land capability classification is 4e. This soil does not meet hydric criteria. The calcium carbonate equivalent within 40 inches, typically, does not exceed 60 percent. There are no saline horizons within 30 inches of the soil surface.

Component: Eckrant (5%)
Generated brief soil descriptions are created for major soil components. The Eckrant soil is a minor component.

Component: Bolar (3%)
Generated brief soil descriptions are created for major soil components. The Bolar soil is a minor component.

Component: Doss (3%)
Generated brief soil descriptions are created for major soil components. The Doss soil is a minor component.

Component: Krum (2%)
Generated brief soil descriptions are created for major soil components. The Krum soil is a minor component.

Map Unit BrB (0.37%)

Map Unit Name:	Branyon clay, 1 to 3 percent slopes
Bedrock Depth - Min:	
Watertable Depth - Annual Min:	
Drainage Class - Dominant:	Moderately well drained
Hydrologic Group - Dominant:	D - Soils in this group have high runoff potential when thoroughly wet. Water movement through the soil is restricted or very restricted.

Major components are printed below

Branyon(85%)

horizon Ap(0cm to 31cm)	Clay
horizon Bkss(31cm to 183cm)	Clay
horizon BCkss(183cm to 203cm)	Clay

Soil Information

Component Description:

Minor map unit components are excluded from this report.

Map Unit: BrB - Branyon clay, 1 to 3 percent slopes

Component: Branyon (85%)
The Branyon component makes up 85 percent of the map unit. Slopes are 1 to 3 percent. This component is on circular gilgai on stream terraces on river valleys. The parent material consists of calcareous clayey alluvium derived from mudstone of Pleistocene age. Depth to a root restrictive layer is greater than 60 inches. The natural drainage class is moderately well drained. Water movement in the most restrictive layer is low. Available water to a depth of 60 inches (or restricted depth) is high. Shrink-swell potential is very high. This soil is not flooded. It is not ponded. There is no zone of water saturation within a depth of 72 inches. Organic matter content in the surface horizon is about 2 percent. This component is in the R086AY011TX Southern Blackland ecological site. Nonirrigated land capability classification is 2e. This soil does not meet hydric criteria. The calcium carbonate equivalent within 40 inches, typically, does not exceed 9 percent. There are no saline horizons within 30 inches of the soil surface. The soil has a maximum sodium adsorption ratio of 1 within 30 inches of the soil surface.

Component: Lewisville (5%)
Generated brief soil descriptions are created for major soil components. The Lewisville soil is a minor component.

Component: Houston Black (5%)
Generated brief soil descriptions are created for major soil components. The Houston Black soil is a minor component.

Component: Burleson (5%)
Generated brief soil descriptions are created for major soil components. The Burleson soil is a minor component.

Map Unit DnA (0.68%)

Map Unit Name:	Denton silty clay, 0 to 1 percent slopes
Bedrock Depth - Min:	132cm
Watertable Depth - Annual Min:	
Drainage Class - Dominant:	Well drained
Hydrologic Group - Dominant:	C - Soils in this group have moderately high runoff potential when thoroughly wet. Water transmission through the soil is somewhat restricted.
Major components are printed below	
Denton(90%)	
horizon Ap(0cm to 33cm)	Silty clay
horizon Bw(33cm to 48cm)	Silty clay
horizon 2Bk(48cm to 91cm)	Silt loam
horizon 2CBk(91cm to 132cm)	Silt loam
horizon 2R(132cm to 203cm)	Bedrock

Component Description:

Minor map unit components are excluded from this report.

Map Unit: DnA - Denton silty clay, 0 to 1 percent slopes

Component: Denton (90%)
The Denton component makes up 90 percent of the map unit. Slopes are 0 to 1 percent. This component is on ridges on hills. The parent material consists of clayey slope alluvium and/or residuum over calcareous residuum weathered from limestone. Depth to a root restrictive layer, bedrock, lithic, is 40 to 60 inches. The natural drainage class is well drained. Water movement in the most restrictive layer is moderately low. Available water to a depth of 60 inches (or restricted depth) is moderate. Shrink-swell potential is moderate. This soil is not flooded. It is not ponded. There is no zone of water saturation within a depth of 72 inches. Organic matter content in the surface horizon is about 3 percent. This component is in the R085XY179TX Clayey Slope 30-38 ecological site. Nonirrigated land capability classification is 3s. This soil does not meet hydric criteria. The calcium carbonate equivalent within 40 inches, typically, does not exceed 70 percent. There are no saline horizons within 30 inches of the soil surface.

Component: Crawford (5%)
Generated brief soil descriptions are created for major soil components. The Crawford soil is a minor component.

Soil Information

Component: Krum (5%)
Generated brief soil descriptions are created for major soil components. The Krum soil is a minor component.

Map Unit DnB (5.66%)

Map Unit Name:	Denton silty clay, 1 to 3 percent slopes
Bedrock Depth - Min:	91cm
Watertable Depth - Annual Min:	
Drainage Class - Dominant:	Well drained
Hydrologic Group - Dominant:	D - Soils in this group have high runoff potential when thoroughly wet. Water movement through the soil is restricted or very restricted.

Major components are printed below

Denton(88%)

horizon A(0cm to 36cm)	Silty clay
horizon Bw(36cm to 64cm)	Silty clay
horizon Bk(64cm to 84cm)	Silty clay
horizon Ck(84cm to 91cm)	Gravelly silty clay
horizon R(91cm to 203cm)	Bedrock

Component Description:

Minor map unit components are excluded from this report.

Map Unit: DnB - Denton silty clay, 1 to 3 percent slopes

Component: Denton (88%)
The Denton component makes up 88 percent of the map unit. Slopes are 1 to 3 percent. This component is on hillslopes on dissected plateaus. The parent material consists of silty and clayey slope alluvium over residuum weathered from limestone. Depth to a root restrictive layer, bedrock, lithic, is 22 to 60 inches. The natural drainage class is well drained. Water movement in the most restrictive layer is moderately low. Available water to a depth of 60 inches (or restricted depth) is low. Shrink-swell potential is moderate. This soil is not flooded. It is not ponded. There is no zone of water saturation within a depth of 72 inches. Organic matter content in the surface horizon is about 3 percent. This component is in the R081CY357TX Clay Loam 29-35 Pz ecological site. Nonirrigated land capability classification is 3s. This soil does not meet hydric criteria. The calcium carbonate equivalent within 40 inches, typically, does not exceed 60 percent. There are no saline horizons within 30 inches of the soil surface.

Component: Krum (6%)
Generated brief soil descriptions are created for major soil components. The Krum soil is a minor component.

Component: Doss (4%)
Generated brief soil descriptions are created for major soil components. The Doss soil is a minor component.

Component: Anhalt (2%)
Generated brief soil descriptions are created for major soil components. The Anhalt soil is a minor component.

Map Unit DoC (4.35%)

Map Unit Name:	Doss silty clay, moist, 1 to 5 percent slopes
Bedrock Depth - Min:	43cm
Watertable Depth - Annual Min:	
Drainage Class - Dominant:	Well drained
Hydrologic Group - Dominant:	D - Soils in this group have high runoff potential when thoroughly wet. Water movement through the soil is restricted or very restricted.

Major components are printed below

Doss(85%)

horizon A(0cm to 23cm)	Silty clay
horizon Bk(23cm to 43cm)	Silty clay
horizon Cr(43cm to 203cm)	Bedrock

Soil Information

Component Description:

Minor map unit components are excluded from this report.

Map Unit: DoC - Doss silty clay, moist, 1 to 5 percent slopes

Component: Doss (85%)
The Doss component makes up 85 percent of the map unit. Slopes are 1 to 5 percent. This component is on hillslopes on dissected plateaus. The parent material consists of residuum weathered from limestone. Depth to a root restrictive layer, bedrock, paralithic, is 11 to 20 inches. The natural drainage class is well drained. Water movement in the most restrictive layer is moderately low. Available water to a depth of 60 inches (or restricted depth) is very low. Shrink-swell potential is moderate. This soil is not flooded. It is not ponded. There is no zone of water saturation within a depth of 72 inches. Organic matter content in the surface horizon is about 2 percent. This component is in the R081CY574TX Shallow 29-35 Pz ecological site. Nonirrigated land capability classification is 4e. This soil does not meet hydric criteria. The calcium carbonate equivalent within 40 inches, typically, does not exceed 55 percent. There are no saline horizons within 30 inches of the soil surface.

Component: Brackett (7%)
Generated brief soil descriptions are created for major soil components. The Brackett soil is a minor component.

Component: Bolar (5%)
Generated brief soil descriptions are created for major soil components. The Bolar soil is a minor component.

Component: Purves (1%)
Generated brief soil descriptions are created for major soil components. The Purves soil is a minor component.

Component: Denton (1%)
Generated brief soil descriptions are created for major soil components. The Denton soil is a minor component.

Component: Eckrant (1%)
Generated brief soil descriptions are created for major soil components. The Eckrant soil is a minor component.

Map Unit EaD (3.4%)

Map Unit Name:	Eckrant cobbly clay, 1 to 8 percent slopes
Bedrock Depth - Min:	28cm
Watertable Depth - Annual Min:	
Drainage Class - Dominant:	Well drained
Hydrologic Group - Dominant:	D - Soils in this group have high runoff potential when thoroughly wet. Water movement through the soil is restricted or very restricted.
Major components are printed below	
Eckrant(85%)	
horizon A1(0cm to 10cm)	Cobbly clay
horizon A2(10cm to 28cm)	Very cobbly clay
horizon R(28cm to 203cm)	Bedrock

Component Description:

Minor map unit components are excluded from this report.

Map Unit: EaD - Eckrant cobbly clay, 1 to 8 percent slopes

Component: Eckrant (85%)
The Eckrant component makes up 85 percent of the map unit. Slopes are 1 to 8 percent. This component is on ridges on dissected plateaus. The parent material consists of residuum weathered from limestone. Depth to a root restrictive layer, bedrock, lithic, is 4 to 20 inches. The natural drainage class is well drained. Water movement in the most restrictive layer is moderately low. Available water to a depth of 60 inches (or restricted depth) is very low. Shrink-swell potential is high. This soil is not flooded. It is not ponded. There is no zone of water saturation within a depth of 72 inches. Organic matter content in the surface horizon is about 6 percent. This component is in the R081CY360TX Low Stony Hill 29-35 Pz ecological site. Nonirrigated land capability classification is 6s. This soil does not meet hydric criteria. The calcium carbonate equivalent within 40 inches, typically, does not exceed 2 percent. There are no saline horizons within 30 inches of the soil surface.

Soil Information

Component: Brackett (7%)
Generated brief soil descriptions are created for major soil components. The Brackett soil is a minor component.

Component: Bexar (5%)
Generated brief soil descriptions are created for major soil components. The Bexar soil is a minor component.

Component: Krum (3%)
Generated brief soil descriptions are created for major soil components. The Krum soil is a minor component.

Map Unit FaA (0.08%)

Map Unit Name:	Fairlie clay, 0 to 1 percent slopes
Bedrock Depth - Min:	117cm
Watertable Depth - Annual Min:	
Drainage Class - Dominant:	Moderately well drained
Hydrologic Group - Dominant:	D - Soils in this group have high runoff potential when thoroughly wet. Water movement through the soil is restricted or very restricted.

Major components are printed below

Fairlie(100%)

horizon H1(0cm to 20cm)	Clay
horizon H2(20cm to 117cm)	Clay
horizon H3(117cm to 137cm)	Bedrock

Component Description:

Minor map unit components are excluded from this report.

Map Unit: FaA - Fairlie clay, 0 to 1 percent slopes

Component: Fairlie (100%)
The Fairlie component makes up 100 percent of the map unit. Slopes are 0 to 1 percent. This component is on ridges on dissected plains. The parent material consists of residuum weathered from Austin chalk formation. Depth to a root restrictive layer, bedrock, paralithic, is 40 to 60 inches. The natural drainage class is moderately well drained. Water movement in the most restrictive layer is low. Available water to a depth of 60 inches (or restricted depth) is moderate. Shrink-swell potential is high. This soil is not flooded. It is not ponded. There is no zone of water saturation within a depth of 72 inches. Organic matter content in the surface horizon is about 3 percent. This component is in the R086AY011TX Southern Blackland ecological site. Nonirrigated land capability classification is 2s. This soil does not meet hydric criteria. The calcium carbonate equivalent within 40 inches, typically, does not exceed 13 percent. There are no saline horizons within 30 inches of the soil surface.

Map Unit FaB (1.72%)

Map Unit Name:	Fairlie clay, 1 to 2 percent slopes
Bedrock Depth - Min:	117cm
Watertable Depth - Annual Min:	
Drainage Class - Dominant:	Moderately well drained
Hydrologic Group - Dominant:	D - Soils in this group have high runoff potential when thoroughly wet. Water movement through the soil is restricted or very restricted.

Major components are printed below

Fairlie(100%)

horizon H1(0cm to 20cm)	Clay
horizon H2(20cm to 117cm)	Clay
horizon H3(117cm to 137cm)	Bedrock

Component Description:

Minor map unit components are excluded from this report.

Map Unit: FaB - Fairlie clay, 1 to 2 percent slopes

Soil Information

Component: Fairlie (100%)
The Fairlie component makes up 100 percent of the map unit. Slopes are 1 to 2 percent. This component is on ridges on dissected plains. The parent material consists of residuum weathered from Austin chalk formation. Depth to a root restrictive layer, bedrock, paralithic, is 40 to 60 inches. The natural drainage class is moderately well drained. Water movement in the most restrictive layer is low. Available water to a depth of 60 inches (or restricted depth) is moderate. Shrink-swell potential is high. This soil is not flooded. It is not ponded. There is no zone of water saturation within a depth of 72 inches. Organic matter content in the surface horizon is about 3 percent. This component is in the R086AY011TX Southern Blackland ecological site. Nonirrigated land capability classification is 2e. This soil does not meet hydric criteria. The calcium carbonate equivalent within 40 inches, typically, does not exceed 13 percent. There are no saline horizons within 30 inches of the soil surface.

Map Unit FhF2 (0.39%)

Map Unit Name:	Ferris-Heiden complex, 5 to 15 percent slopes, moderately eroded
Bedrock Depth - Min:	114cm
Watertable Depth - Annual Min:	
Drainage Class - Dominant:	Well drained
Hydrologic Group - Dominant:	D - Soils in this group have high runoff potential when thoroughly wet. Water movement through the soil is restricted or very restricted.

Major components are printed below

Ferris(48%)	
horizon Ap(0cm to 25cm)	Clay
horizon Bkss1(25cm to 76cm)	Clay
horizon Bkss2(76cm to 114cm)	Clay
horizon Cdk(114cm to 152cm)	Clay
Heiden(32%)	
horizon Ap(0cm to 13cm)	Clay
horizon A(13cm to 38cm)	Clay
horizon Bkss1(38cm to 97cm)	Clay
horizon Bkss2(97cm to 163cm)	Clay
horizon CBdk(163cm to 203cm)	Clay

Component Description:

Minor map unit components are excluded from this report.

Map Unit: FhF2 - Ferris-Heiden complex, 5 to 15 percent slopes, moderately eroded

Component: Ferris (48%)
The Ferris, moderately eroded component makes up 48 percent of the map unit. Slopes are 5 to 15 percent. This component is on linear gilgai on ridges on dissected plains. The parent material consists of clayey residuum weathered from mudstone. Depth to a root restrictive layer, bedrock, densic, is 39 to 59 inches. The natural drainage class is well drained. Water movement in the most restrictive layer is low. Available water to a depth of 60 inches (or restricted depth) is high. Shrink-swell potential is very high. This soil is not flooded. It is not ponded. There is no zone of water saturation within a depth of 72 inches. Organic matter content in the surface horizon is about 1 percent. This component is in the R086AY009TX Southern Eroded Blackland ecological site. Nonirrigated land capability classification is 3e. This soil does not meet hydric criteria. The calcium carbonate equivalent within 40 inches, typically, does not exceed 16 percent. There are no saline horizons within 30 inches of the soil surface. The soil has a maximum sodium adsorption ratio of 1 within 30 inches of the soil surface.

Component: Heiden (32%)
The Heiden, moderately eroded component makes up 32 percent of the map unit. Slopes are 5 to 15 percent. This component is on linear gilgai on ridges on dissected plains. The parent material consists of clayey residuum weathered from mudstone. Depth to a root restrictive layer, densic material, is 48 to 65 inches. The natural drainage class is well drained. Water movement in the most restrictive layer is low. Available water to a depth of 60 inches (or restricted depth) is high. Shrink-swell potential is very high. This soil is not flooded. It is not ponded. There is no zone of water saturation within a depth of 72 inches. Organic matter content in the surface horizon is about 3 percent. This component is in the R086AY009TX Southern Eroded Blackland ecological site. Nonirrigated land capability classification is 3e. This soil does not meet hydric criteria. The calcium carbonate equivalent within 40 inches, typically, does not exceed 16 percent. There are no saline horizons within 30 inches of the soil surface. The soil has a maximum sodium adsorption ratio of 5 within 30 inches of the soil surface.

Component: Vertel (10%)

Soil Information

Generated brief soil descriptions are created for major soil components. The Vertel soil is a minor component.

Component: Tinn (10%)
Generated brief soil descriptions are created for major soil components. The Tinn soil is a minor component.

Map Unit HeB (1.25%)

Map Unit Name:	Heiden clay, 1 to 3 percent slopes
Bedrock Depth - Min:	
Watertable Depth - Annual Min:	
Drainage Class - Dominant:	Well drained
Hydrologic Group - Dominant:	D - Soils in this group have high runoff potential when thoroughly wet. Water movement through the soil is restricted or very restricted.

Major components are printed below

Heiden(85%)

horizon Ap(0cm to 15cm)	Clay
horizon A(15cm to 46cm)	Clay
horizon Bkss(46cm to 147cm)	Clay
horizon CBdk(147cm to 178cm)	Clay

Component Description:

Minor map unit components are excluded from this report.

Map Unit: HeB - Heiden clay, 1 to 3 percent slopes

Component: Heiden (85%)
The Heiden component makes up 85 percent of the map unit. Slopes are 1 to 3 percent. This component is on ridges on dissected plains. The parent material consists of clayey residuum weathered from mudstone. Depth to a root restrictive layer, densic material, is 40 to 65 inches. The natural drainage class is well drained. Water movement in the most restrictive layer is low. Available water to a depth of 60 inches (or restricted depth) is high. Shrink-swell potential is very high. This soil is not flooded. It is not ponded. There is no zone of water saturation within a depth of 72 inches. Organic matter content in the surface horizon is about 3 percent. This component is in the R086AY011TX Southern Blackland ecological site. Nonirrigated land capability classification is 3e. This soil does not meet hydric criteria. The calcium carbonate equivalent within 40 inches, typically, does not exceed 14 percent. There are no saline horizons within 30 inches of the soil surface. The soil has a maximum sodium adsorption ratio of 7 within 30 inches of the soil surface.

Component: Houston Black (10%)
Generated brief soil descriptions are created for major soil components. The Houston Black soil is a minor component.

Component: Ferris (5%)
Generated brief soil descriptions are created for major soil components. The Ferris soil is a minor component.

Map Unit HedC2 (0.47%)

Map Unit Name:	Heiden clay, 2 to 5 percent slopes, moderately eroded
Bedrock Depth - Min:	
Watertable Depth - Annual Min:	
Drainage Class - Dominant:	Well drained
Hydrologic Group - Dominant:	D - Soils in this group have high runoff potential when thoroughly wet. Water movement through the soil is restricted or very restricted.

Major components are printed below

Heiden(85%)

horizon Ap(0cm to 15cm)	Clay
horizon Bkss1(15cm to 46cm)	Clay
horizon Bkss2(46cm to 147cm)	Clay
horizon CBdk(147cm to 203cm)	Clay

Component Description:

Minor map unit components are excluded from this report.

Map Unit: HedC2 - Heiden clay, 2 to 5 percent slopes, moderately eroded

Component: Heiden (85%)
The Heiden, moderately eroded component makes up 85 percent of the map unit. Slopes are 2 to 5 percent. This component is on ridges on dissected plains. The parent material consists of clayey residuum weathered from mudstone. Depth to a root restrictive layer, densic material, is 40 to 65 inches. The natural drainage class is well drained. Water movement in the most restrictive layer is low. Available water to a depth of 60 inches (or restricted depth) is high. Shrink-swell potential is very high. This soil is not flooded. It is not ponded. There is no zone of water saturation within a depth of 72 inches. Organic matter content in the surface horizon is about 3 percent. This component is in the R086AY009TX Southern Eroded Blackland ecological site. Nonirrigated land capability classification is 3e. This soil does not meet hydric criteria. The calcium carbonate equivalent within 40 inches, typically, does not exceed 14 percent. There are no saline horizons within 30 inches of the soil surface. The soil has a maximum sodium adsorption ratio of 7 within 30 inches of the soil surface.

Component: Ferris (8%)
Generated brief soil descriptions are created for major soil components. The Ferris, moderately eroded soil is a minor component.

Component: Heiden (7%)
Generated brief soil descriptions are created for major soil components. The Heiden soil is a minor component.

Map Unit HeiD3 (0.42%)

Map Unit Name:	Heiden clay, 5 to 8 percent slopes, eroded
Bedrock Depth - Min:	
Watertable Depth - Annual Min:	
Drainage Class - Dominant:	Well drained
Hydrologic Group - Dominant:	D - Soils in this group have high runoff potential when thoroughly wet. Water movement through the soil is restricted or very restricted.
Major components are printed below	
Heiden(85%)	
horizon A1(0cm to 20cm)	Clay
horizon A2(20cm to 56cm)	Clay
horizon Bss(56cm to 112cm)	Clay
horizon CBd(112cm to 203cm)	Clay

Component Description:

Minor map unit components are excluded from this report.

Map Unit: HeiD3 - Heiden clay, 5 to 8 percent slopes, eroded

Component: Heiden (85%)
The Heiden, moderately eroded component makes up 85 percent of the map unit. Slopes are 5 to 8 percent. This component is on ridges on dissected plains. The parent material consists of clayey residuum weathered from mudstone. Depth to a root restrictive layer, densic material, is 40 to 65 inches. The natural drainage class is well drained. Water movement in the most restrictive layer is low. Available water to a depth of 60 inches (or restricted depth) is moderate. Shrink-swell potential is very high. This soil is not flooded. It is not ponded. There is no zone of water saturation within a depth of 72 inches. Organic matter content in the surface horizon is about 3 percent. This component is in the R086AY009TX Southern Eroded Blackland ecological site. Nonirrigated land capability classification is 4e. This soil does not meet hydric criteria. The calcium carbonate equivalent within 40 inches, typically, does not exceed 14 percent. There are no saline horizons within 30 inches of the soil surface. The soil has a maximum sodium adsorption ratio of 7 within 30 inches of the soil surface.

Component: Ferris (10%)
Generated brief soil descriptions are created for major soil components. The Ferris, moderately eroded soil is a minor component.

Component: Heiden (5%)
Generated brief soil descriptions are created for major soil components. The Heiden, severely eroded soil is a minor component.

Soil Information

Map Unit HesE (1.94%)

Map Unit Name:	Heiden extremely stony clay, 3 to 12 percent slopes
Bedrock Depth - Min:	
Watertable Depth - Annual Min:	
Drainage Class - Dominant:	Well drained
Hydrologic Group - Dominant:	D - Soils in this group have high runoff potential when thoroughly wet. Water movement through the soil is restricted or very restricted.

Major components are printed below

Heiden(100%)

horizon H1(0cm to 20cm)	Very stony clay
horizon H2(20cm to 152cm)	Clay

Component Description:

Minor map unit components are excluded from this report.

Map Unit: HesE - Heiden extremely stony clay, 3 to 12 percent slopes

Component: Heiden (100%)
The Heiden component makes up 100 percent of the map unit. Slopes are 3 to 12 percent. This component is on linear gilgai on ridges on dissected plains. The parent material consists of clayey residuum weathered from clayey shale of Eagleford Shale or Taylor Marl. Depth to a root restrictive layer is greater than 60 inches. The natural drainage class is well drained. Water movement in the most restrictive layer is low. Available water to a depth of 60 inches (or restricted depth) is high. Shrink-swell potential is very high. This soil is not flooded. It is not ponded. There is no zone of water saturation within a depth of 72 inches. Organic matter content in the surface horizon is about 2 percent. This component is in the R086AY011TX Southern Blackland ecological site. Nonirrigated land capability classification is 6s. This soil does not meet hydric criteria. The calcium carbonate equivalent within 40 inches, typically, does not exceed 25 percent. There are no saline horizons within 30 inches of the soil surface. The soil has a maximum sodium adsorption ratio of 7 within 30 inches of the soil surface.

Map Unit HoB (3.63%)

Map Unit Name:	Houston Black clay, 1 to 3 percent slopes
Bedrock Depth - Min:	
Watertable Depth - Annual Min:	
Drainage Class - Dominant:	Moderately well drained
Hydrologic Group - Dominant:	D - Soils in this group have high runoff potential when thoroughly wet. Water movement through the soil is restricted or very restricted.

Major components are printed below

Houston Black(80%)

horizon Ap(0cm to 15cm)	Clay
horizon Bkss(15cm to 178cm)	Clay
horizon BCkss(178cm to 203cm)	Clay

Component Description:

Minor map unit components are excluded from this report.

Map Unit: HoB - Houston Black clay, 1 to 3 percent slopes

Component: Houston Black (80%)
The Houston Black component makes up 80 percent of the map unit. Slopes are 1 to 3 percent. This component is on linear gilgai on ridges on dissected plains. The parent material consists of clayey residuum weathered from calcareous mudstone of Upper Cretaceous Age. Depth to a root restrictive layer is greater than 60 inches. The natural drainage class is moderately well drained. Water movement in the most restrictive layer is low. Available water to a depth of 60 inches (or restricted depth) is high. Shrink-swell potential is very high. This soil is not flooded. It is not ponded. There is no zone of water saturation within a depth of 72 inches. Organic matter content in the surface horizon is about 3 percent. This component is in the R086AY011TX Southern Blackland ecological site. Nonirrigated land capability classification is 2e. This soil does not meet hydric criteria. The calcium carbonate equivalent within 40 inches, typically, does not exceed 25 percent. There are no saline horizons within 30 inches of the soil surface.

Soil Information

Component: Heiden (15%)
Generated brief soil descriptions are created for major soil components. The Heiden soil is a minor component.

Component: Fairlie (5%)
Generated brief soil descriptions are created for major soil components. The Fairlie soil is a minor component.

Map Unit HoC2 (3.09%)

Map Unit Name:	Houston Black clay, 3 to 5 percent slopes, moderately eroded
Bedrock Depth - Min:	
Watertable Depth - Annual Min:	
Drainage Class - Dominant:	Moderately well drained
Hydrologic Group - Dominant:	D - Soils in this group have high runoff potential when thoroughly wet. Water movement through the soil is restricted or very restricted.

Major components are printed below

Houston Black(90%)

horizon Ap(0cm to 15cm)	Clay
horizon Bkss(15cm to 178cm)	Clay
horizon BCkss(178cm to 203cm)	Clay

Component Description:

Minor map unit components are excluded from this report.

Map Unit: HoC2 - Houston Black clay, 3 to 5 percent slopes, moderately eroded

Component: Houston Black (90%)
The Houston Black, moderately eroded component makes up 90 percent of the map unit. Slopes are 3 to 5 percent. This component is on linear gilgai on ridges on dissected plains. The parent material consists of clayey residuum weathered from calcareous mudstone of Upper Cretaceous Age. Depth to a root restrictive layer is greater than 60 inches. The natural drainage class is moderately well drained. Water movement in the most restrictive layer is low. Available water to a depth of 60 inches (or restricted depth) is high. Shrink-swell potential is very high. This soil is not flooded. It is not ponded. There is no zone of water saturation within a depth of 72 inches. Organic matter content in the surface horizon is about 3 percent. This component is in the R086AY009TX Southern Eroded Blackland ecological site. Nonirrigated land capability classification is 3e. This soil does not meet hydric criteria. The calcium carbonate equivalent within 40 inches, typically, does not exceed 25 percent. There are no saline horizons within 30 inches of the soil surface.

Component: Heiden (10%)
Generated brief soil descriptions are created for major soil components. The Heiden soil is a minor component.

Map Unit KrA (5.72%)

Map Unit Name:	Krum silty clay, 0 to 1 percent slopes
Bedrock Depth - Min:	
Watertable Depth - Annual Min:	
Drainage Class - Dominant:	Well drained
Hydrologic Group - Dominant:	C - Soils in this group have moderately high runoff potential when thoroughly wet. Water transmission through the soil is somewhat restricted.

Major components are printed below

Krum(100%)

horizon H1(0cm to 15cm)	Silty clay
horizon H2(15cm to 112cm)	Silty clay
horizon H3(112cm to 183cm)	Silty clay

Component Description:

Minor map unit components are excluded from this report.

Soil Information

Map Unit: KrA - Krum silty clay, 0 to 1 percent slopes

Component: Krum (100%)
The Krum component makes up 100 percent of the map unit. Slopes are 0 to 1 percent. This component is on stream terraces on dissected plains. The parent material consists of clayey alluvium of Pleistocene age derived from mixed sources. Depth to a root restrictive layer is greater than 60 inches. The natural drainage class is well drained. Water movement in the most restrictive layer is moderately high. Available water to a depth of 60 inches (or restricted depth) is moderate. Shrink-swell potential is high. This soil is not flooded. It is not ponded. There is no zone of water saturation within a depth of 72 inches. Organic matter content in the surface horizon is about 2 percent. This component is in the R086AY007TX Southern Clay Loam ecological site. Nonirrigated land capability classification is 2s. This soil does not meet hydric criteria. The calcium carbonate equivalent within 40 inches, typically, does not exceed 20 percent. There are no saline horizons within 30 inches of the soil surface. The soil has a maximum sodium adsorption ratio of 1 within 30 inches of the soil surface.

Map Unit KrB (5.5%)

Map Unit Name:	Krum silty clay, 1 to 3 percent slopes
Bedrock Depth - Min:	
Watertable Depth - Annual Min:	
Drainage Class - Dominant:	Well drained
Hydrologic Group - Dominant:	C - Soils in this group have moderately high runoff potential when thoroughly wet. Water transmission through the soil is somewhat restricted.

Major components are printed below

Krum(100%)

horizon H1(0cm to 15cm)	Silty clay
horizon H2(15cm to 112cm)	Silty clay
horizon H3(112cm to 183cm)	Silty clay

Component Description:

Minor map unit components are excluded from this report.

Map Unit: KrB - Krum silty clay, 1 to 3 percent slopes

Component: Krum (100%)
The Krum component makes up 100 percent of the map unit. Slopes are 1 to 3 percent. This component is on stream terraces on dissected plains. The parent material consists of clayey alluvium of Pleistocene age derived from mixed sources. Depth to a root restrictive layer is greater than 60 inches. The natural drainage class is well drained. Water movement in the most restrictive layer is moderately high. Available water to a depth of 60 inches (or restricted depth) is moderate. Shrink-swell potential is high. This soil is not flooded. It is not ponded. There is no zone of water saturation within a depth of 72 inches. Organic matter content in the surface horizon is about 2 percent. This component is in the R086AY007TX Southern Clay Loam ecological site. Nonirrigated land capability classification is 2e. This soil does not meet hydric criteria. The calcium carbonate equivalent within 40 inches, typically, does not exceed 20 percent. There are no saline horizons within 30 inches of the soil surface. The soil has a maximum sodium adsorption ratio of 1 within 30 inches of the soil surface.

Map Unit OaA (0.83%)

Map Unit Name:	Oakalla silty clay loam, 0 to 2 percent slopes, occasionally flooded
Bedrock Depth - Min:	
Watertable Depth - Annual Min:	
Drainage Class - Dominant:	Well drained
Hydrologic Group - Dominant:	B - Soils in this group have moderately low runoff potential when thoroughly wet. Water transmission through the soil is unimpeded.

Major components are printed below

Oakalla(90%)

horizon Ap(0cm to 20cm)	Silty clay loam
horizon Ak(20cm to 58cm)	Silty clay loam
horizon Bk1(58cm to 135cm)	Silty clay loam
horizon Bk2(135cm to 203cm)	Silty clay loam

Soil Information

Component Description:

Minor map unit components are excluded from this report.

Map Unit: OaA - Oakalla silty clay loam, 0 to 2 percent slopes, occasionally flooded

Component: Oakalla (90%)
The Oakalla, occasionally flooded component makes up 90 percent of the map unit. Slopes are 0 to 2 percent. This component is on flood plains on river valleys. The parent material consists of loamy alluvium derived from limestone. Depth to a root restrictive layer is greater than 60 inches. The natural drainage class is well drained. Water movement in the most restrictive layer is moderately high. Available water to a depth of 60 inches (or restricted depth) is moderate. Shrink-swell potential is low. This soil is occasionally flooded. It is not ponded. There is no zone of water saturation within a depth of 72 inches. Organic matter content in the surface horizon is about 4 percent. This component is in the R086AY012TX Loamy Bottomland ecological site. Nonirrigated land capability classification is 3e. This soil does not meet hydric criteria. The calcium carbonate equivalent within 40 inches, typically, does not exceed 50 percent. There are no saline horizons within 30 inches of the soil surface.

Component: Frio (5%)
Generated brief soil descriptions are created for major soil components. The Frio, occasionally flooded soil is a minor component.

Component: Tinn (4%)
Generated brief soil descriptions are created for major soil components. The Tinn, frequently flooded soil is a minor component.

Component: Gladewater (1%)
Generated brief soil descriptions are created for major soil components. The Gladewater, frequently flooded soil is a minor component.

Map Unit OkA (37.84%)

Map Unit Name:	Oakalla silty clay loam, 0 to 2 percent slopes, frequently flooded
Bedrock Depth - Min:	
Watertable Depth - Annual Min:	
Drainage Class - Dominant:	Well drained
Hydrologic Group - Dominant:	B - Soils in this group have moderately low runoff potential when thoroughly wet. Water transmission through the soil is unimpeded.
Major components are printed below	
Oakalla(90%)	
horizon Ap(0cm to 20cm)	Silty clay loam
horizon Ak(20cm to 58cm)	Silty clay loam
horizon Bk1(58cm to 135cm)	Silty clay loam
horizon Bk2(135cm to 203cm)	Silty clay loam

Component Description:

Minor map unit components are excluded from this report.

Map Unit: OkA - Oakalla silty clay loam, 0 to 2 percent slopes, frequently flooded

Component: Oakalla (90%)
The Oakalla component makes up 90 percent of the map unit. Slopes are 0 to 2 percent. This component is on flood plains on dissected plateaus. The parent material consists of loamy alluvium derived from limestone. Depth to a root restrictive layer is greater than 60 inches. The natural drainage class is well drained. Water movement in the most restrictive layer is moderately high. Available water to a depth of 60 inches (or restricted depth) is moderate. Shrink-swell potential is low. This soil is frequently flooded. It is not ponded. There is no zone of water saturation within a depth of 72 inches. Organic matter content in the surface horizon is about 4 percent. This component is in the R081CY561TX Loamy Bottomland 29-35 Pz ecological site. Nonirrigated land capability classification is 5w. Irrigated land capability classification is 5w. This soil does not meet hydric criteria. The calcium carbonate equivalent within 40 inches, typically, does not exceed 50 percent. There are no saline horizons within 30 inches of the soil surface.

Component: Oakalla (4%)
Generated brief soil descriptions are created for major soil components. The Oakalla, occasionally flooded soil is a minor component.

Soil Information

Component: Dev (3%)
Generated brief soil descriptions are created for major soil components. The Dev soil is a minor component.

Component: Krum (2%)
Generated brief soil descriptions are created for major soil components. The Krum soil is a minor component.

Component: Unnamed (1%)
Generated brief soil descriptions are created for major soil components. The Unnamed, hydric soil is a minor component.

Map Unit OlA (3.85%)

Map Unit Name:	Oakalla soils, 0 to 1 percent slopes, channeled, frequently flooded
Bedrock Depth - Min:	
Watertable Depth - Annual Min:	
Drainage Class - Dominant:	Well drained
Hydrologic Group - Dominant:	B - Soils in this group have moderately low runoff potential when thoroughly wet. Water transmission through the soil is unimpeded.

Major components are printed below

Oakalla(90%)

horizon Ap(0cm to 20cm)	Silty clay loam
horizon Ak(20cm to 58cm)	Silty clay loam
horizon Bk1(58cm to 135cm)	Silty clay loam
horizon Bk2(135cm to 203cm)	Silty clay loam

Component Description:

Minor map unit components are excluded from this report.

Map Unit: OlA - Oakalla soils, 0 to 1 percent slopes, channeled, frequently flooded

Component: Oakalla (90%)
The Oakalla, channeled component makes up 90 percent of the map unit. Slopes are 0 to 1 percent. This component is on channeled flood plains on dissected plateaus. The parent material consists of loamy alluvium derived from limestone. Depth to a root restrictive layer is greater than 60 inches. The natural drainage class is well drained. Water movement in the most restrictive layer is moderately high. Available water to a depth of 60 inches (or restricted depth) is moderate. Shrink-swell potential is low. This soil is frequently flooded. It is not ponded. There is no zone of water saturation within a depth of 72 inches. Organic matter content in the surface horizon is about 4 percent. This component is in the R081CY561TX Loamy Bottomland 29-35 Pz ecological site. Nonirrigated land capability classification is 5w. Irrigated land capability classification is 5w. This soil does not meet hydric criteria. The calcium carbonate equivalent within 40 inches, typically, does not exceed 50 percent. There are no saline horizons within 30 inches of the soil surface.

Component: Rock outcrop (5%)
Generated brief soil descriptions are created for major soil components. The Rock outcrop soil is a minor component.

Component: Dev (4%)
Generated brief soil descriptions are created for major soil components. The Dev soil is a minor component.

Component: Unnamed (1%)
Generated brief soil descriptions are created for major soil components. The Unnamed, hydric soil is a minor component.

Map Unit QuC (2.23%)

Map Unit Name:	Queeny clay loam, 1 to 5 percent slopes
Bedrock Depth - Min:	
Watertable Depth - Annual Min:	
Drainage Class - Dominant:	Well drained
Hydrologic Group - Dominant:	D - Soils in this group have high runoff potential when thoroughly wet. Water movement through the soil is restricted or very restricted.

Soil Information

Major components are printed below

Queeny(100%)

horizon H1(0cm to 46cm)	Clay loam
horizon H2(46cm to 81cm)	Cemented material
horizon H3(81cm to 251cm)	Variable

Component Description:

Minor map unit components are excluded from this report.

Map Unit: QuC - Queeny clay loam, 1 to 5 percent slopes

Component: Queeny (100%)
The Queeny component makes up 100 percent of the map unit. Slopes are 1 to 5 percent. This component is on paleoterraces on dissected plains. The parent material consists of gravelly alluvium of Quaternary age derived from mixed sources. Depth to a root restrictive layer, petrocalcic, is 10 to 20 inches. The natural drainage class is well drained. Water movement in the most restrictive layer is moderately low. Available water to a depth of 60 inches (or restricted depth) is very low. Shrink-swell potential is moderate. This soil is not flooded. It is not ponded. There is no zone of water saturation within a depth of 72 inches. Organic matter content in the surface horizon is about 2 percent. This component is in the R086AY002TX Southern Chalky Ridge ecological site. Nonirrigated land capability classification is 4s. This soil does not meet hydric criteria. The calcium carbonate equivalent within 40 inches, typically, does not exceed 8 percent. There are no saline horizons within 30 inches of the soil surface.

Map Unit SvA (1.62%)

Map Unit Name:	Sunev silty clay loam, 0 to 1 percent slopes
Bedrock Depth - Min:	
Watertable Depth - Annual Min:	
Drainage Class - Dominant:	Well drained
Hydrologic Group - Dominant:	B - Soils in this group have moderately low runoff potential when thoroughly wet. Water transmission through the soil is unimpeded.

Major components are printed below

Sunev(85%)

horizon A(0cm to 30cm)	Silty clay loam
horizon Bk(30cm to 107cm)	Clay loam
horizon BCk(107cm to 203cm)	Clay loam

Component Description:

Minor map unit components are excluded from this report.

Map Unit: SvA - Sunev silty clay loam, 0 to 1 percent slopes

Component: Sunev (85%)
The Sunev component makes up 85 percent of the map unit. Slopes are 0 to 1 percent. This component is on stream terraces on dissected plains. The parent material consists of loamy alluvium derived from limestone. Depth to a root restrictive layer is greater than 60 inches. The natural drainage class is well drained. Water movement in the most restrictive layer is moderately high. Available water to a depth of 60 inches (or restricted depth) is moderate. Shrink-swell potential is low. This soil is not flooded. It is not ponded. There is no zone of water saturation within a depth of 72 inches. Organic matter content in the surface horizon is about 2 percent. This component is in the R086AY007TX Southern Clay Loam ecological site. Nonirrigated land capability classification is 3e. This soil does not meet hydric criteria. The calcium carbonate equivalent within 40 inches, typically, does not exceed 50 percent. There are no saline horizons within 30 inches of the soil surface.

Component: Krum (10%)
Generated brief soil descriptions are created for major soil components. The Krum soil is a minor component.

Component: Queeny (5%)
Generated brief soil descriptions are created for major soil components. The Queeny soil is a minor component.

Soil Information

Map Unit SvB (1.51%)

Map Unit Name:	Sunev silty clay loam, 1 to 3 percent slopes
Bedrock Depth - Min:	
Watertable Depth - Annual Min:	
Drainage Class - Dominant:	Well drained
Hydrologic Group - Dominant:	B - Soils in this group have moderately low runoff potential when thoroughly wet. Water transmission through the soil is unimpeded.

Major components are printed below

Sunev(100%)

horizon H1(0cm to 46cm)	Silty clay loam
horizon H2(46cm to 132cm)	Silty clay loam
horizon H3(132cm to 152cm)	Silty clay loam

Component Description:

Minor map unit components are excluded from this report.

Map Unit: SvB - Sunev silty clay loam, 1 to 3 percent slopes

Component: Sunev (100%)
The Sunev component makes up 100 percent of the map unit. Slopes are 1 to 3 percent. This component is on stream terraces on dissected plains. The parent material consists of loamy alluvium of Quaternary age derived from mixed sources. Depth to a root restrictive layer is greater than 60 inches. The natural drainage class is well drained. Water movement in the most restrictive layer is moderately high. Available water to a depth of 60 inches (or restricted depth) is moderate. Shrink-swell potential is low. This soil is not flooded. It is not ponded. There is no zone of water saturation within a depth of 72 inches. Organic matter content in the surface horizon is about 2 percent. This component is in the R086AY007TX Southern Clay Loam ecological site. Nonirrigated land capability classification is 2e. This soil does not meet hydric criteria. The calcium carbonate equivalent within 40 inches, typically, does not exceed 55 percent.

Map Unit TnA (1.93%)

Map Unit Name:	Tinn clay, 0 to 1 percent slopes, frequently flooded
Bedrock Depth - Min:	
Watertable Depth - Annual Min:	
Drainage Class - Dominant:	Moderately well drained
Hydrologic Group - Dominant:	D - Soils in this group have high runoff potential when thoroughly wet. Water movement through the soil is restricted or very restricted.

Major components are printed below

Tinn(85%)

horizon A(0cm to 42cm)	Clay
horizon Bss(42cm to 146cm)	Clay
horizon Bkssy(146cm to 204cm)	Clay

Component Description:

Minor map unit components are excluded from this report.

Map Unit: TnA - Tinn clay, 0 to 1 percent slopes, frequently flooded

Component: Tinn (85%)
The Tinn component makes up 85 percent of the map unit. Slopes are 0 to 1 percent. This component is on circular gilgai on flood plains on dissected plains. The parent material consists of calcareous clayey alluvium. Depth to a root restrictive layer is greater than 60 inches. The natural drainage class is moderately well drained. Water movement in the most restrictive layer is low. Available water to a depth of 60 inches (or restricted depth) is moderate. Shrink-swell potential is very high. This soil is frequently flooded. It is not ponded. There is no zone of water saturation within a depth of 72 inches. Organic matter content in the surface horizon is about 3 percent. This component is in the R086AY013TX Clayey Bottomland ecological site. Nonirrigated land capability classification is 5w. This soil does not meet hydric criteria. The calcium carbonate equivalent within 40 inches, typically, does not exceed 15 percent. There are no saline horizons within 30 inches of the soil surface.

Soil Information

Component: Whitesboro (10%)
Generated brief soil descriptions are created for major soil components. The Whitesboro soil is a minor component.

Component: Gladewater (5%)
Generated brief soil descriptions are created for major soil components. The Gladewater soil is a minor component.

Map Unit W (0.12%)

Map Unit Name: Water

No more attributes available for this map unit

Component Description:

Minor map unit components are excluded from this report.

Map Unit: W - Water

Component: Water (100%)
Generated brief soil descriptions are created for major soil components. The Water is a miscellaneous area.

Organized Sewage Collection System Application

Texas Commission on Environmental Quality

For Regulated Activities on the Edwards Aquifer Recharge Zone and Relating to 30 TAC §213.5(c), Effective June 1, 1999

To ensure that the application is administratively complete, confirm that all fields in the form are complete, verify that all requested information is provided, consistently reference the same site and contact person in all forms in the application, and ensure forms are signed by the appropriate party.

Note: Including all the information requested in the form and attachments contributes to more streamlined technical reviews.

Regulated Entity Name: JSACQ Georgetown LP

1. ☒ **Attachment A – SCS Engineering Design Report**. This Engineering Design Report is provided to fulfill the requirements of 30 TAC Chapter 217, including 217.10 of Subchapter A, §§217.51 – 217.70 of Subchapter C, and Subchapter D as applicable, and is required to be submitted with this SCS Application Form.

Customer Information

2. The entity and contact person responsible for providing the required engineering certification of testing for this sewage collection system upon completion (including private service connections) and every five years thereafter to the appropriate TCEQ region office pursuant to 30 TAC §213.5(c) is:

   Contact Person: Miles Terry
   Entity: JSACQ Georgetown LP
   Mailing Address: 4890 Allpha Road, Suite 100
   City, State: Dallas, Texas Zip: 75244
   Telephone: 972-628-7400 Fax: _____
   Email Address: Mterry@JacksonShaw.com
   The appropriate regional office must be informed of any changes in this information within 30 days of the change.

3. The engineer responsible for the design of this sewage collection system is:

   Contact Person: Jacob W. Valentien, P.E.
   Texas Licensed Professional Engineer's Number: 124993
   Entity: Westwood Professional Services
   Mailing Address: 8701 N. Mopac Expy
   City, State:Austin, TX Zip: 78759
   Telephone:(512)-485-0831 Fax:N/A
   Email Address:Jacob.Valentien@westwoodps.com

Project Information

4. Anticipated type of development to be served (estimated future population to be served, plus adequate allowance for institutional and commercial flows):

   ☐ Residential: Number of single-family lots: _____
   ☐ Multi-family: Number of residential units: _____
   ☐ Commercial
   ☒ Industrial
   ☐ Off-site system (not associated with any development)
   ☐ Other: _____

5. The character and volume of wastewater is shown below:

100% Domestic	433,252 gallons/day
_____% Industrial	_____ gallons/day
_____% Commingled	_____ gallons/day

   Total gallons/day: 433,252

6. Existing and anticipated infiltration/inflow is 37,738 gallons/day. This will be addressed by: following TCEQ and City of Georgetown sanitary sewer collection system standards.

7. A Water Pollution Abatement Plan (WPAP) is required for construction of any associated commercial, industrial or residential project located on the Recharge Zone.

   ☒ The WPAP application for this development was approved by letter dated Jackson-Shaw Phase 1: February 25, 2022 ; Cross Point Phase 2: March 31, 2023. A copy of the approval letter is attached.
   ☐ The WPAP application for this development was submitted to the TCEQ on _____, but has not been approved.
   ☐ A WPAP application is required for an associated project, but it has not been submitted.
   ☐ There is no associated project requiring a WPAP application.

8. Pipe description:

Table 1 - Pipe Description

Pipe Diameter(Inches)	*Linear Feet (1)*	*Pipe Material (2)*	*Specifications (3)*
36	9,841	CCFRPM	ASTM D3262
12	1,920	PVC SDR 26	ASTM D3034
8	1,645	PVC SDR 26	ASTM D3034

Total Linear Feet: 13,406

(1) Linear feet - Include stub-outs and double service connections. Do not include private service laterals.
(2) Pipe Material - If PVC, state SDR value.

(3) Specifications - ASTM / ANSI / AWWA specification and class numbers should be included.

9. The sewage collection system will convey the wastewater to the Pecan Branch Wastewater (name) Treatment Plant. The treatment facility is:

☒ Existing
☐ Proposed

10. All components of this sewage collection system will comply with:

☒ The City of Georgetown standard specifications.
☐ Other. Specifications are attached.

11. ☒ No force main(s) and/or lift station(s) are associated with this sewage collection system.

☐ A force main(s) and/or lift station(s) is associated with this sewage collection system and the **Lift Station/Force Main System Application** form (TCEQ-0624) is included with this application.

Alignment

12. ☒ There are no deviations from uniform grade in this sewage collection system without manholes and with open cut construction.

13. ☒ There are no deviations from straight alignment in this sewage collection system without manholes.

☐ **Attachment B - Justification and Calculations for Deviation in Straight Alignment without Manholes**. A justification for deviations from straight alignment in this sewage collection system without manholes with documentation from pipe manufacturer allowing pipe curvature is attached.

☐ For curved sewer lines, all curved sewer line notes (TCEQ-0596) are included on the construction plans for the wastewater collection system.

Manholes and Cleanouts

14. ☒ Manholes or clean-outs exist at the end of each sewer line(s). These locations are listed below: (Please attach additional sheet if necessary)

Table 2 - Manholes and Cleanouts

Line	*Shown on Sheet*	*Station*	*Manhole or Clean-out?*
36" S-1	10 Of 66	0+00.00	MANHOLE
36" S-1	10 Of 66	2+90.45	MANHOLE
36" S-1	10 Of 66	5+84.31	MANHOLE
36" S-1	11 Of 66	7+99.16	MANHOLE
36" S-1	11 Of 66	9+65.16	MANHOLE
36" S-1	11 Of 66	13+61.21	MANHOLE

Line	*Shown on Sheet*	*Station*	*Manhole or Clean-out?*
36" S-1	11 Of 66	15+49.08	MANHOLE
36" S-1	12 Of 66	18+67.31	MANHOLE
36" S-1	12 Of 66	21+70.63	MANHOLE
36" S-1	13 Of 66	24+84.69	MANHOLE

15. ☒ Manholes are installed at all Points of Curvature and Points of Termination of a sewer line.

16. ☒ The maximum spacing between manholes on this project for each pipe diameter is no greater than:

Pipe Diameter (inches)	**Max. Manhole Spacing (feet)**
6 - 15	500
16 - 30	800
36 - 48	1000
≥54	2000

☐ **Attachment C – Justification for Variance from Maximum Manhole Spacing**. The maximum spacing between manholes on this project (for each pipe diameter used) is greater than listed in the table above. A justification for any variance from the maximum spacing is attached, and must include a letter from the entity which will operate and maintain the system stating that it has the capability to maintain lines with manhole spacing greater than the allowed spacing.

17. ☐ All manholes will be monolithic, cast-in-place concrete.

☒ The use of pre-cast manholes is requested for this project. The manufacturer's specifications and construction drawings, showing the method of sealing the joints, are attached.

Site Plan Requirements

Items 18 - 25 must be included on the Site Plan.

18. ☒ The Site Plan must have a minimum scale of 1" = 400'.

Site Plan Scale: 1" = 300'.

19. ☒ The Site Plan must include the sewage collection system general layout, including manholes with station numbers, and sewer pipe stub outs (if any). Site plan must be overlain by topographic contour lines, using a contour interval of not greater than ten feet and showing the area within both the five-year floodplain and the 100-year floodplain of any drainage way.

20. Lateral stub-outs:

☒ The location of all lateral stub-outs are shown and labeled.

☐ No lateral stub-outs will be installed during the construction of this sewer collection system.

21. Location of existing and proposed water lines:

☒ The entire water distribution system for this project is shown and labeled.
☐ If not shown on the Site Plan, a Utility Plan is provided showing the entire water and sewer systems.
☐ There will be no water lines associated with this project.

22. 100-year floodplain:

☐ After construction is complete, no part of this project will be in or cross a 100-year floodplain, either naturally occurring or manmade. (Do not include streets or concrete-lined channels constructed above of sewer lines.)
☒ After construction is complete, all sections located within the 100-year floodplain will have water-tight manholes. These locations are listed in the table below and are shown and labeled on the Site Plan. (Do not include streets or concrete-lined channels constructed above sewer lines.)

Table 3 - 100-Year Floodplain

Line	***Sheet***	***Station***
36" S-1	10-20 of 65	0+00 to 86+50
12" S-2	22 of 65	101+00 to 103+00
	of	to
	of	to

23. 5-year floodplain:

☐ After construction is complete, no part of this project will be in or cross a 5-year floodplain, either naturally occurring or man-made. (Do not include streets or concrete-lined channels constructed above sewer lines.)
☒ After construction is complete, all sections located within the 5-year floodplain will be encased in concrete or capped with concrete. These locations are listed in the table below and are shown and labeled on the Site Plan. (Do not include streets or concrete-lined channels constructed above sewer lines.)

Table 4 - 5-Year Floodplain

Line	***Sheet***	***Station***
36" S-1	10-15 of 65	4+50 to 44+50
36" S-1	16 of 65	50+50 to 54+00
36" S-1	18-20 of 65	65+00 to 84+50
12" S-2	23-25 of 65	111+50 to 127+50

24. ☒ Legal boundaries of the site are shown.

25. ☒ The ***final plans and technical specifications*** are submitted for the TCEQ's review. Each sheet of the construction plans and specifications are dated, signed, and sealed by the Texas Licensed Professional Engineer responsible for the design on each sheet.

Items 26 - 33 must be included on the Plan and Profile sheets.

26. ☒ All existing or proposed water line crossings and any parallel water lines within 9 feet of sewer lines are listed in the table below. These lines must have the type of pressure rated pipe to be installed shown on the plan and profile sheets. Any request for a variance from the required pressure rated piping at crossings must include a variance approval from 30 TAC Chapter 290.

☐ There will be no water line crossings.
☐ There will be no water lines within 9 feet of proposed sewer lines.

Table 5 - Water Line Crossings

Line	*Station or Closest Point*	*Crossing or Parallel*	*Horizontal Separation Distance*	*Vertical Separation Distance*
36" S-1	79+50	CROSSING	0	13'

27. Vented Manholes:

☐ **No part** of this sewer line is within the 100-year floodplain and vented manholes are not required by 30 TAC Chapter 217.
☒ **A portion** of this sewer line is within the 100-year floodplain and vented manholes will be provided at less than 1500 foot intervals. These water-tight manholes are listed in the table below and labeled on the appropriate profile sheets.
☐ **A portion** of this sewer line is within the 100-year floodplain and an alternative means of venting shall be provided at less than 1500 feet intervals. A description of the alternative means is described on the following page.
☐ **A portion** of this sewer line is within the 100-year floodplain; however, there is no interval longer than 1500 feet located within. No vented manholes will be used.

Table 6 - Vented Manholes

Line	*Manhole*	*Station*	*Sheet*
36" S-1	6'	0+00	10
36" S-1	6'	2+90.45	10
36" S-1	6'	5+84.31	10

Line	*Manhole*	*Station*	*Sheet*
36" S-1	6'	7+99.16	11
36" S-1	6'	9+65.16	11
36" S-1	6'	13+61.21	11

28. Drop manholes:

☐ There are no drop manholes associated with this project.
☒ Sewer lines which enter new or existing manholes or "manhole structures" higher than 24 inches above the manhole invert are listed in the table below and labeled on the appropriate profile sheets. These lines meet the requirements of 30 TAC §217.55(l)(2)(H).

Table 7 - Drop Manholes

Line	*Manhole*	*Station*	*Sheet*
36" S-1	6'	61+59.92	17
36" S-1	6'	79+12.60	19
36" S-1	6'	95+93.88	22

29. Sewer line stub-outs (For proposed extensions):

☒ The placement and markings of all sewer line stub-outs are shown and labeled.
☐ No sewer line stub-outs are to be installed during the construction of this sewage collection system.

30. Lateral stub-outs (For proposed private service connections):

☒ The placement and markings of all lateral stub-outs are shown and labeled.
☐ No lateral stub-outs are to be installed during the construction of this sewage collection system.

31. Minimum flow velocity (From Appendix A)

☒ Assuming pipes are flowing full; all slopes are designed to produce flows equal to or greater than 2.0 feet per second for this system/line.

32. Maximum flow velocity/slopes (From Appendix A)

☒ Assuming pipes are flowing full, all slopes are designed to produce maximum flows of less than or equal to 10 feet per second for this system/line.
☐ **Attachment D – Calculations for Slopes for Flows Greater Than 10.0 Feet per Second.** Assuming pipes are flowing full, some slopes produce flows which are greater than 10 feet per second. These locations are listed in the table below. Calculations are attached.

Table 8 - Flows Greater Than 10 Feet per Second

Line	*Profile Sheet*	*Station to Station*	*FPS*	*% Slope*	*Erosion/Shock Protection*

33. Assuming pipes are flowing full, where flows are ≥ 10 feet per second, the provisions noted below have been made to protect against pipe displacement by erosion and/or shock under 30 TAC §217.53(l)(2)(B).

☐ Concrete encasement shown on appropriate Plan and Profile sheets for the locations listed in the table above.

☐ Steel-reinforced, anchored concrete baffles/retards placed every 50 feet shown on appropriate Plan and Profile sheets for the locations listed in the table above.

☒ N/A

Administrative Information

34. ☒ The final plans and technical specifications are submitted for TCEQ review. Each sheet of the construction plans and specifications are dated, signed, and sealed by the Texas Licensed Professional Engineer responsible for the design on each sheet.

35. ☒ Standard details are shown on the detail sheets, which are dated, signed, and sealed by the Texas Licensed Professional Engineer, as listed in the table below:

Table 9 - Standard Details

Standard Details	*Shown on Sheet*
Lateral stub-out marking **[Required]**	6 of 66
Manhole, showing inverts comply with 30 TAC §217.55(l)(2) **[Required]**	33-35 of 66
Alternate method of joining lateral to existing SCS line for potential future connections **[Required]**	N/A of N/A
Typical trench cross-sections **[Required]**	29 of 66
Bolted manholes **[Required]**	28 of 66
Sewer Service lateral standard details **[Required]**	N/A of N/A
Clean-out at end of line **[Required, if used]**	N/A of N/A
Baffles or concrete encasement for shock/erosion protection **[Required, if flow velocity of any section of pipe >10 fps]**	N/A of N/A
Detail showing Wastewater Line/Water Line Crossing **[Required, if crossings are proposed]**	29 of 66
Mandrel detail or specifications showing compliance with 30 TAC §217.57(b) and (c) **[Required, if Flexible Pipe is used]**	31 of 66

Standard Details	*Shown on Sheet*
Drop manholes **[Required, if a pipe entering a manhole is more than 24 inches above manhole invert]**	27 of 66

36. ☒ All organized sewage collection system general construction notes (TCEQ-0596) are included on the construction plans for this sewage collection system.

37. ☒ All proposed sewer lines will be sufficiently surveyed/staked to allow an assessment prior to TCEQ executive director approval. If the alignments of the proposed sewer lines are not walkable on that date, the application will be deemed incomplete and returned.

    ☒ Survey staking was completed on this date: April 01, 2024

38. ☒ Submit one (1) original and one (1) copy of the application, plus additional copies as needed for each affected incorporated city, groundwater conservation district, and county in which the project will be located. The TCEQ will distribute the additional copies to these jurisdictions. The copies must be submitted to the appropriate regional office.

39. ☒ Any modification of this SCS application will require TCEQ approval, prior to construction, and may require submission of a revised application, with appropriate fees.

Signature

To the best of my knowledge, the responses to this form accurately reflect all information requested concerning the proposed regulated activities and methods to protect the Edwards Aquifer. This **Organized Sewage Collection System Application** is hereby submitted for TCEQ review and executive director approval. The system was designed in accordance with the requirements of 30 TAC §213.5(c) and 30 TAC §217 and prepared by:

Print Name of Licensed Professional Engineer: Jacob W. Valentien, P.E.

Date: 03/08/2024

Place engineer's seal here:

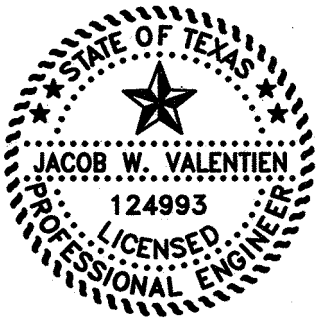

Signature of Licensed Professional Engineer:



Appendix A-Flow Velocity Table

Flow Velocity (Flowing Full) All gravity sewer lines on the Edwards Aquifer Recharge Zone shall be designed and constructed with hydraulic slopes sufficient to give a velocity when flowing full of not less than 2.0 feet per second, and not greater than 10 feet per second. The grades shown in the following table are based on Manning's formula and an n factor of 0.013 and shall be the minimum and maximum acceptable slopes unless provisions are made otherwise.

Table 10 - Slope Velocity

Pipe Diameter(Inches)	*% Slope required for minimum flow velocity of 2.0 fps*	*% Slope which produces flow velocity of 10.0 fps*
6	0.50	12.35
8	0.33	8.40
10	0.25	6.23
12	0.20	4.88
15	0.15	3.62
18	0.11	2.83
21	0.09	2.30
24	0.08	1.93
27	0.06	1.65
30	0.055	1.43
33	0.05	1.26
36	0.045	1.12
39	0.04	1.01
>39	*	*

**For lines larger than 39 inches in diameter, the slope may be determined by Manning's formula (as shown below) to maintain a minimum velocity greater than 2.0 feet per second when flowing full and a maximum velocity less than 10 feet per second when flowing full.*

$$v = \frac{1.49}{n} \times R_h^{0.67} \times \sqrt{S}$$

Figure 1 - Manning's Formula

Where:

v = velocity (ft/sec)
n = Manning's roughness coefficient (0.013)
Rh = hydraulic radius (ft)
S = slope (ft/ft)

Westwood

Continuation of Table 2- Manholes and Cleanouts

Westwood

ADDITIONAL MANHOLE AND CLEANOUTS

LINE	SHOWN ON SHEET	STATION	MANHOLE OR CLEANOUT
36" S-1	13 OF 66	28+72.73	MANHOLE
36" S-1	13 OF 66	30+81.09	MANHOLE
36" S-1	14 OF 66	34+44.55	MANHOLE
36" S-1	14 OF 66	38+18.02	MANHOLE
36" S-1	15 OF 66	41+01.93	MANHOLE
36" S-1	15 OF 66	48+15.89	MANHOLE
36" S-1	15 OF 66	48+40.13	MANHOLE
36" S-1	16 OF 66	50+89.63	MANHOLE
36" S-1	16 OF 66	51+22.64	MANHOLE
36" S-1	16 OF 66	51+67.10	MANHOLE
36" S-1	17 OF 66	56+09.92	MANHOLE
36" S-1	17 OF 66	61+59.92	MANHOLE
36" S-1	17 OF 66	64+01.22	MANHOLE
36" S-1	18 OF 66	67+07.08	MANHOLE
36" S-1	18 OF 66	71+20.99	MANHOLE
36" S-1	19 OF 66	75+98.75	MANHOLE
36" S-1	19 OF 66	77+20.32	MANHOLE
36" S-1	19 OF 66	79+12.60	MANHOLE
36" S-1	20 OF 66	83+45.28	MANHOLE
36" S-1	20 OF 66	86+55.55	MANHOLE
36" S-1	21 OF 66	89+30.22	MANHOLE
36" S-1	21 OF 66	92+24.29	MANHOLE
36" S-1	21 OF 66	95+43.26	MANHOLE
36" S-1	22 OF 66	95+93.88	MANHOLE
12" S-2	22 OF 66	97+52.65	MANHOLE
12" S-2	22 OF 66	102+36.84	MANHOLE
12" S-2	23 OF 66	106+10.29	MANHOLE
12" S-2	23 OF 66	108+11.77	MANHOLE
12" S-2	23 OF 66	108+42.97	MANHOLE
12" S-2	23 OF 66	109+33.47	MANHOLE
12" S-2	23 OF 66	109+60.67	MANHOLE
12" S-2	24 OF 66	112+95.77	MANHOLE
8" S-2	24 OF 66	116+19.23	MANHOLE
8" S-2	24 OF 66	116+62.13	MANHOLE
8" S-2	25 OF 66	120+89.54	MANHOLE
8" S-2	25 OF 66	124+77.60	MANHOLE
8" S-2	26 OF 66	128+39.55	MANHOLE
8" S-2	26 OF 66	132+28.13	MANHOLE

Westwood

Continuation of Table 4- Five Year Flood Plain Letter

Westwood

March 11, 2024
Dry Berry Creek Wastewater Interceptor

RE: 5-Year Floodplain Concrete Cap Variance Request

TCEQ Reviewer,

Westwood Professional Services (Westwood) on the behalf of JSACQ is proposing to construct a 13,406 linear feet (LF) sanitary sewer interceptor (DBCI) located in the City of Georgetown. DBCI has been designed to run parallel to the Dry Berry Creek in order to provide services to the Existing Jackson Shaw Developments. Westwood worked with the City to determine the alignment slope and material based on the most recent City Wastewater Master Plan (WWMP).

DBCI is mostly located in the 100-year flood plain and is designed to include bolted, gasketed, and vented manholes to comply with the Texas Commission on Environmental Quality (TCEQ) and the City of Georgetown (COG) floodplain requirements.

DBCI is also partially located within the 5-year floodplain as well. The route of DBCI was selected based long term City planning and topographical constraints as well as property owner feedback. Westwood worked with many landowners to gain access to their properties in order to conduct site work for the design portion on this project and to facilitate permanent wastewater easements for the City of Georgetown on these landowner's properties.

The City selected the tie-in location for DBCI, therefore Westwood had no other tie-in location options. Westwood was limited on the route for DBCI. This route needs to stay in the current location in order to tie into the City's Berry Creek Interceptor (BCI) and provide wastewater services to the Jackson Shaw developments.

DBCI is designed to be constructed 10 ft to 35 ft below natural grade. The concern of the proposed sanitary sewer becoming exposed due to the erosion and scouring within the 5-year flood plain is significantly less considering the depth of the proposed line. The depth of cover for DBCI is much greater than the four (4) feet depth required by the TCEQ and the City. Westwood is recommending that the TCEQ review and agree that a concrete cap is not required due to the much greater depth of cover provided for the DBCI within the 5-year floodplain.

In conclusion, Westwood is requested that the TCEQ deem the DBCI route will remain as is currently presented and a waiver of the concrete cap requirement for the wastewater line within the 5-year floodplain is approved.

Feel free to contact me if you have any questions.

Thank you,

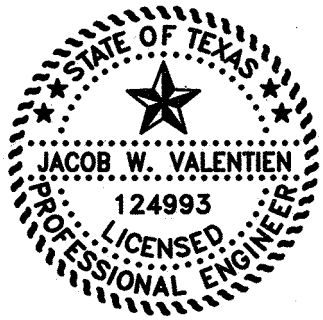

Jacob W. Valentien, P.E.

westwoodps.com
(888) 937-5150

Westwood

Continuation of Table 6- Vented Manholes

Westwood

VENTED MANHOLE AND CLEANOUTS

LINE	SHOWN ON SHEET	STATION	MANHOLE OR CLEANOUT
36" S-1	11 OF 66	15+49.08	MANHOLE
36" S-1	12 OF 66	18+67.31	MANHOLE
36" S-1	12 OF 66	21+70.63	MANHOLE
36" S-1	13 OF 66	24+84.69	MANHOLE
36" S-1	13 OF 66	28+72.73	MANHOLE
36" S-1	13 OF 66	30+81.09	MANHOLE
36" S-1	14 OF 66	34+44.55	MANHOLE
36" S-1	14 OF 66	38+18.02	MANHOLE
36" S-1	15 OF 66	41+01.93	MANHOLE
36" S-1	15 OF 66	48+15.89	MANHOLE
36" S-1	15 OF 66	48+40.13	MANHOLE
36" S-1	16 OF 66	50+89.63	MANHOLE
36" S-1	16 OF 66	51+22.64	MANHOLE
36" S-1	16 OF 66	51+67.10	MANHOLE
36" S-1	17 OF 66	56+09.92	MANHOLE
36" S-1	17 OF 66	61+59.92	MANHOLE
36" S-1	17 OF 66	64+01.22	MANHOLE
36" S-1	18 OF 66	67+07.08	MANHOLE
36" S-1	18 OF 66	71+20.99	MANHOLE
36" S-1	19 OF 66	75+98.75	MANHOLE
36" S-1	19 OF 66	77+20.32	MANHOLE
36" S-1	19 OF 66	79+12.60	MANHOLE
36" S-1	20 OF 66	83+45.28	MANHOLE
12" S-2	23 OF 66	106+10.29	MANHOLE
12" S-2	24 OF 66	112+95.77	MANHOLE
8" S-2	24 OF 66	116+19.23	MANHOLE
8" S-2	24 OF 66	116+62.13	MANHOLE
8" S-2	25 OF 66	120+89.54	MANHOLE
8" S-2	25 OF 66	124+77.60	MANHOLE
8" S-2	26 OF 66	128+39.55	MANHOLE

Westwood

Site Plan

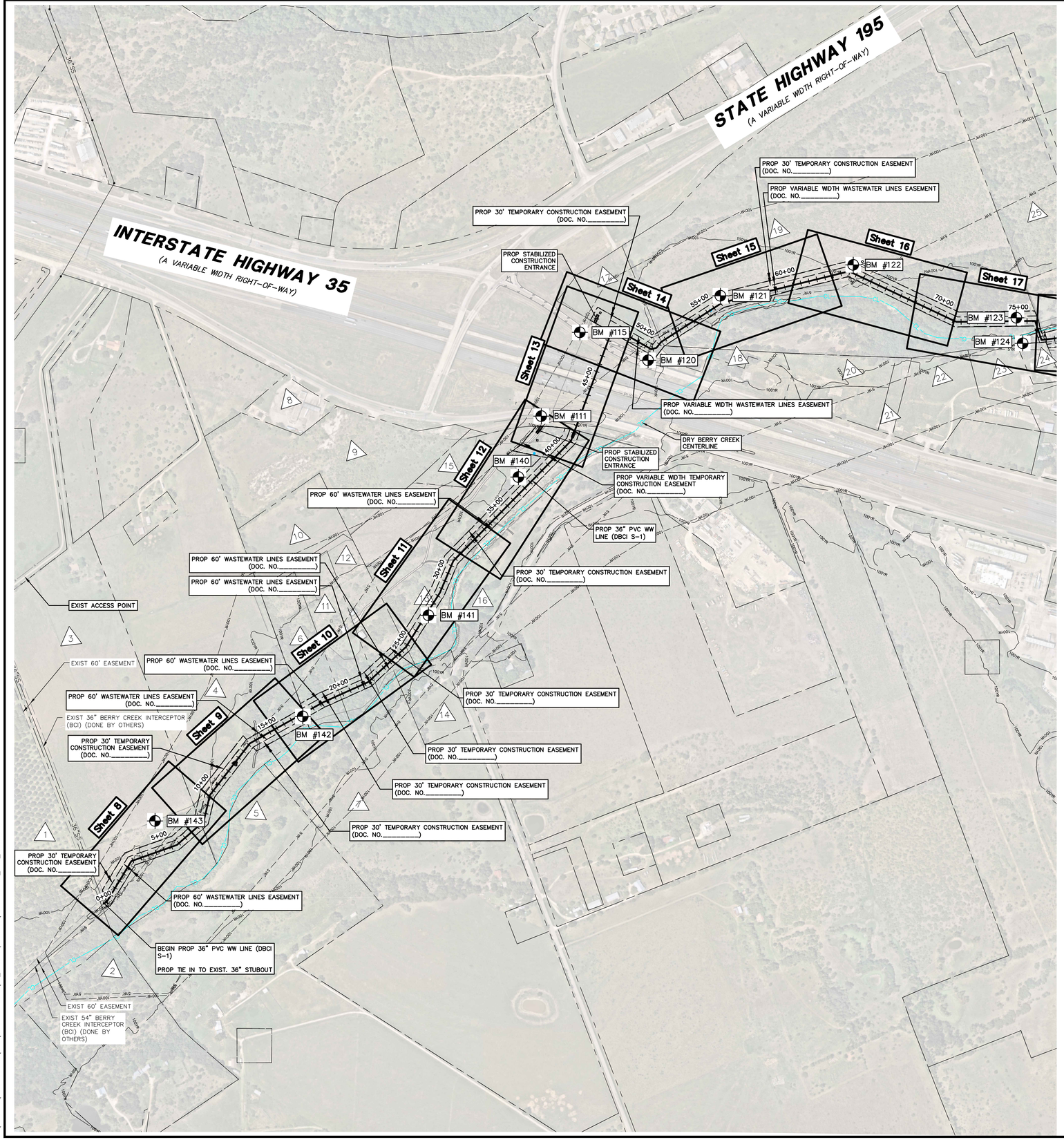

0 150 300 600 900

GRAPHIC SCALE IN FEET
1"=300'

WASTEWATER ROUTE OWNERSHIP				
LOT	ACREAGE	OWNER	PROPERTY ID	DOCUMENT NUMBER / VOLUME/PAGE
1	41.26	SCHWEGMANN, DAVID & KATHERINE	R039044	9613146
2	19.69	LESTER MERLIN (TOD) & DAVID LESTER	R039080	2016079509
3	38.13	BERRY CREEK PARTNERS LP	R038978	2022119279
4	38.15	BERRY CREEK PARTNERS LP	R039046	2022119170
5	111.76	REALMAC LTD	R081951	2005065439
6	5.03	JAMES MCELHANON AND GAYLE MCELHANON	R329743	2007028160
7	63.90	ISCHY, DEBBY & STEVEN ISCHY ET AL	R038982	2013088018
8	2.80	PETROLEUM WHOLESALE LP	R038964	2003011087
9	14.63	SPEEDY STOP FOODS STORES LTD	R038950	2005027452
10	10.63	BUCHHORN, KENNETH & KATHRYN TR KENNETH & KATHRYN BUCHHORN REVOC MANAGEMENT TRUST	R108653	2017039117
11	5.00	JAMES MCELHANON AND WIFE, GAYLE MCELHANON	R329742	VOLUME 2110, PAGE 565
12	10.35	GAYLE MCELHANON JAMES MCELHANON	R055003	9911922
13	14.52	GAYLE ANN MCELHANON	R475017	2006038163
14	3.10	LESAK, JENEKE H & MARGARET L GRIFFIN	R445832	2018109487
15	1.32	SPEEDY STOP FOODS STORES LTD	R468139	2005027452
16	8.50	MCELHANON, GAYLE & JAMES & RICHARD & JEAN BUCHHORN	R343150	2022139842
17	4.63	SPEEDY STOP FOODS STORES, LTD	R315061	2006049946
18	1.51	LANDRY, HOWARD NEAL	R566474	VOLUME 1732, PAGE 0249
19	72.00	THE TRAILS, LLC	R039052	2022094181
20	2.88	LANDRY, HOWARD NEAL	R566477	VOLUME 1732, PAGE 0249
21	1.00	LANDRY, HOWARD NEAL	R566478	VOLUME 1732, PAGE 0249
22	6.28	LANDRY, HOWARD NEAL	R566479	VOLUME 1732, PAGE 0249
23	4.10	LANDRY, HOWARD NEAL	R038928	VOLUME 1732, PAGE 0249
24	1.25	LANDRY, HOWARD NEAL	R038929	VOLUME 1732, PAGE 0249
25	13.68	THOMAS JAMES RUSSELL	R040514	VOLUME 1322, PAGE 593

NOTES:

1. ALL PROPERTY INFORMATION FROM TABLE WASTEWATER ROUTE OWNERSHIP WAS GATHERED FROM WCAD AND IS UP TO DATE AS OF 01/31/2024 HTTPS://WWW.WCAD.ORG/

THE FOLLOWING CONTROL POINTS ARE VERTICAL CONTROL ONLY. NORTHING & EASTING VALUES ARE ONLY FOR GENERAL LOCATING PURPOSES AND ARE NOT TO BE USED FOR HORIZONTAL CONTROL.

SURVEY CONTROL AND BENCHMARKS

POINT NO.	GRID NORTHING	GRID EASTING	ELEV	DESCRIPTION
111	10229613.37'	3139638.74'	695.48'	MAG/S – BM
115	10229847.70'	3139130.44'	706.32'	MAG/S – BM
120	10230261.07'	3139299.90'	694.76'	CIRS "WWPS" – BM
121	10230700.08'	3138908.76'	694.08'	CIRS "WWPS" – BM
122	10231506.14'	3138720.64'	696.50'	CIRS "WWPS" – BM
123	10232495.88'	3139042.01'	692.42'	CIRS "WWPS" – BM
124	10232534.27'	3139197.07'	696.48'	CIRS "WWPS" – BM
125	10233271.63'	3139308.28'	706.52'	CIRS "WWPS" – BM
126	10233868.47'	3139188.81'	712.42'	CIRS "WWPS" – BM
127	10234445.32'	3138961.35'	718.91'	CIRS "WWPS" – BM
128	10235616.19'	3138561.32'	711.13'	CIRS "WWPS" – BM
129	10235411.13'	3137753.13'	707.62'	CIRS "WWPS" – BM
140	10229501.20'	3140008.42'	685.76'	CIRS "WWPS" – BM
141	10228928.72'	3140847.59'	680.47'	CIRS "WWPS" – BM
142	10228166.46'	3141461.45'	678.41'	CIRS "WWPS" – BM
143	10227269.68'	3142095.88'	678.13'	CIRS "WWPS" – BM

Westwood
Phone (512) 485-0831
Toll Free (888) 937-5150
8701 N. Mopac Expy, Suite 320
Austin, TX 78759
westwoodps.com
Westwood Professional Services, Inc.
TBPE FIRM REGISTRATION NO. F-11756
TBPLS FIRM REGISTRATION NO. LS-10074301

REVISIONS

NO.	DATE	DESCRIPTION	BY

DBC WASTEWATER INTERCEPTOR
CIVIL INFRASTRUCTURE
GEORGETOWN, TEXAS, 78633

DRAWING INDEX SHEET 1 OF 2

STATE OF TEXAS
JACOB W. VALENTIEN
124993
LICENSED
PROFESSIONAL ENGINEER

THE SEAL APPEARING ON THIS DOCUMENT WAS AUTHORIZED BY SUPERVISION OF JACOB W. VALENTIEN, P.E. 124993 ON 3/1/2024. ALTERATION OF A SEALED DOCUMENT WITHOUT PROPER NOTIFICATION TO THE RESPONSIBLE ENGINEER IS AN OFFENSE UNDER THE TEXAS ENGINEERING PRACTICE ACT.

DESIGN	DRAWN	DATE
JWV	SAG	MAR 2024

SHEET NO.
5
5 OF 66

TGLASPER
3/1/2024 5:06 PM
M:\DWG-46\4670-22.676\DWG\CIVIL C3D 2018\02_SHEETS\OVERALL\4670-22.676_DWG_INDEX.DWG

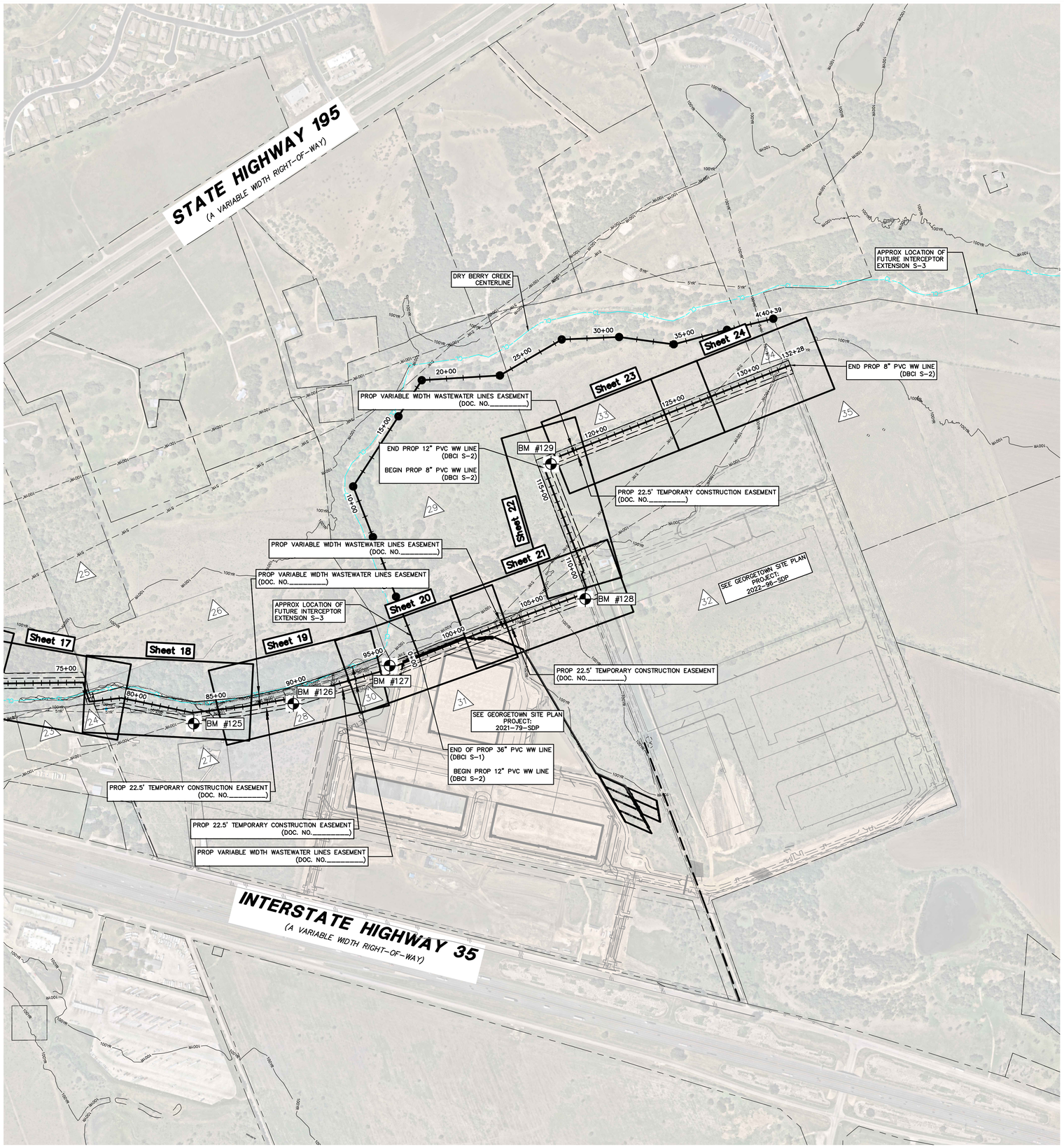

0 100 200 400 600

GRAPHIC SCALE IN FEET
1"=300'

WASTEWATER ROUTE OWNERSHIP				
LOT	ACREAGE	OWNER	PROPERTY ID	DOCUMENT NUMBER / VOLUME/PAGE
23	4.10	LANDRY, HOWARD NEAL	R038928	VOLUME 1732, PAGE 0249
24	1.25	LANDRY, HOWARD NEAL	R038929	VOLUME 1732, PAGE 0249
25	13.68	THOMAS JAMES RUSSELL	R040514	VOLUME 1322, PAGE 593
26	44.97	GT 195 HOLDINGS, LLC	R450909	2021150671
27	2.80	JSACQ GEORGETOWN LP	R040496	2022012116
28	51.02	JSACQ GEORGETOWN LP	R040508	2022012116
29	54.30	FAYERBERG, IRINA I & JORGE O ZAMORA	R327449	2014088568
30	6.33	DRI JS GEORGETOWN II LLC	R629215	2022012116
31	56.14	DRI JS GEORGETOWN II LLC	R629214	2022012116
32	107.30	DRI JS GEORGETOWN II LLC	R647046	2022012307
33	26.26	SAN GABRIEL INVESTMENTS LTD	R462452	2004079454
34	34.41	GRACE ACADEMY OF GEORGETOWN	R486606	2006062617
35	193.07	STRONG, LINDA IRVINE	R011524	2019068288

NOTES:

1. ALL PROPERTY INFORMATION FROM TABLE WASTEWATER ROUTE OWNERSHIP WAS GATHERED FROM WCAD AND IS UP TO DATE AS OF 01/31/2024 HTTPS://WWW.WCAD.ORG/

THE FOLLOWING CONTROL POINTS ARE VERTICAL CONTROL ONLY. NORTHING & EASTING VALUES ARE ONLY FOR GENERAL LOCATING PURPOSES AND ARE NOT TO BE USED FOR HORIZONTAL CONTROL.

SURVEY CONTROL AND BENCHMARKS				
POINT NO.	GRID NORTHING	GRID EASTING	ELEV	DESCRIPTION
111	10229613.37'	3139638.74'	695.48'	MAG/S – BM
115	10229847.70'	3139130.44'	706.32'	MAG/S – BM
120	10230261.07'	3139299.90'	694.76'	CIRS "WWPS" – BM
121	10230700.08'	3138908.76'	694.08'	CIRS "WWPS" – BM
122	10231506.14'	3138720.64'	696.50'	CIRS "WWPS" – BM
123	10232495.88'	3139042.01'	692.42'	CIRS "WWPS" – BM
124	10232534.27'	3139197.07'	696.48'	CIRS "WWPS" – BM
125	10233271.63'	3139308.28'	706.52'	CIRS "WWPS" – BM
126	10233868.47'	3139188.81'	712.42'	CIRS "WWPS" – BM
127	10234445.32'	3138961.35'	718.91'	CIRS "WWPS" – BM
128	10235616.19'	3138561.32'	711.13'	CIRS "WWPS" – BM
129	10235411.13'	3137753.13'	707.62'	CIRS "WWPS" – BM
140	10229501.20'	3140008.42'	685.76'	CIRS "WWPS" – BM
141	10228928.72'	3140847.59'	680.47'	CIRS "WWPS" – BM
142	10228166.46'	3141461.45'	678.41'	CIRS "WWPS" – BM
143	10227269.68'	3142095.88'	678.13'	CIRS "WWPS" – BM

Westwood
Phone (512) 485-0831
Toll Free (888) 937-5150
8701 N. Mopac Expy, Suite 320
Austin, TX 78759
westwoodps.com
Westwood Professional Services, Inc.
TBPE FIRM REGISTRATION NO. F-11756
TBPLS FIRM REGISTRATION NO. LS-10074301

REVISIONS

NO.	DESCRIPTION	DATE	BY

DBC WASTEWATER INTERCEPTOR
CIVIL INFRASTRUCTURE
GEORGETOWN, TEXAS, 78633

DRAWING INDEX SHEET 2 OF 2

STATE OF TEXAS
JACOB W. VALENTIEN
124993
LICENSED
PROFESSIONAL ENGINEER

THE SEAL APPEARING ON THIS DOCUMENT WAS AUTHORIZED BY SUPERVISION OF JACOB W. VALENTIEN, P.E. 124993 ON 3/1/2024. ALTERATION OF A SEALED DOCUMENT WITHOUT PROPER NOTIFICATION TO THE RESPONSIBLE ENGINEER IS AN OFFENSE UNDER THE TEXAS ENGINEERING PRACTICE ACT.

DESIGN	DRAWN	DATE
JWV	SAG	MAR 2024

SHEET NO.
6
6 OF 66

TGLASPER
3/1/2024 5:06 PM
M:\DWG-46\4670-22.676\DWG\CIVIL C3D 2018\02_SHEETS\OVERALL\4670-22.676_DWG_INDEX.DWG

PK-4670-22.676_DWG_INDEX.DWG

Westwood

Attachment A – SCS Engineering Design Report

westwoodps.com
(888) 937-5150

ENGINEERING DESIGN REPORT

DRY BERRY CREEK SANITARY SEWER INTERCEPTOR

City of Georgetown, Williamson County, Texas

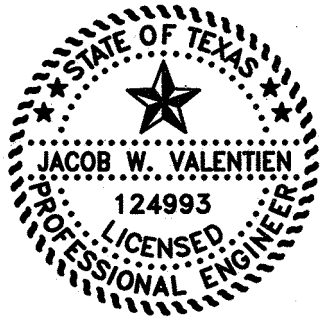

4/19/2024

PREPARED BY:

Westwood

TX REG. ENGINEERING FIRM F-469
TX REG. SURVEYING FIRM LS-10008000
WPS No. 4670-22.676

7557 Rambler Road, Suite 1400
Dallas, Texas 75231

April 16, 2024

Table of Contents

Table of Contents **2**
List of Attachments **3**
1.0 Introduction **4**
1.1 Background and Scope of Work 4
1.2 Project Location 4
1.3 Proposed Development 4
2.0 Wastewater Capacity Analysis **5**
2.1 Wastewater Demand Calculations 5
2.2 Existing Wastewater Utilities 5
2.3 Wastewater Capacity Analysis & Recommended Improvements 5
2.4 Recommended Improvements Design 6
2.5 Inflow & Infiltration Abatement Measures 6
2.6 Structural and Pipe Design 6
2.7 Safety Considerations 7

List of Attachments

Attachment 1 Overall Exhibit

Attachment 2 FEMA Firm Exhibit

Attachment 3 Edwards Aquifer Zone Exhibit

Attachment 4 Jackson Shaw Development Plan

Attachment 5 Wastewater Demand Calculations

Attachment 6 WWTP Capacity Verification

Attachment 7 Existing GUS Utilities

Attachment 8 Construction Plans

Attachment 9 Technical Specifications

1.0 Introduction

1.1 Background and Scope of Work

JSACQ is developing a tract within the City of Georgetown (City) for a proposed phased multi-family, commercial, and industrial development. The following is a sanitary sewer collection system design report for the proposed development with the proposed public infrastructure tying into the Berry Creek Interceptor.

1.2 Project Location

The development is located in Williamson County, approximately two (2) miles from the Airport Road and TX-195 intersection and approximately 0.15 miles from the CR 150 and South IH 35 Service Road intersection, see **Attachment 1 - Overall Aerial.** The proposed collection system is to serve the industrial development and surrounding tracts. The area of the proposed collection system partially lies within City limits while the other portion of the proposed collection system lies within the City's ETJ. The proposed collection system is mostly located within the 100-year floodplain, Zone A, see **Attachment 2 - FEMA FIRM Exhibit**. The proposed collection system is within the Edwards Aquifer Recharge Zone, see **Attachment 3 - Edwards Aquifer Zone Exhibit** and this report and the collection system design are in accordance with TCEQ Regulations Chapter 213 and 217.

1.3 Proposed Development

The proposed development is to consist of multi- family, commercial, industrial development. The overall tract is to be developed in phases. The proposed collection system will be designed, constructed, and implemented to serve the ultimate development. The overall preliminary development plan is attached as **Attachment 4 – Jackson Shaw Development Plan.**

As part of the engineering design process for the ultimate development, the infrastructure is analyzed for the subject tract. As this overall development occurs, the wastewater demand and usage estimates should be continually reviewed and updated.

2.0 Wastewater Capacity Analysis

2.1 Wastewater Demand Calculations

Utilizing the City's Wastewater Master Plan (WWMP) in combination with the proposed development site layout, estimates for wastewater demand have been determined to utilize for site planning and utility design. Attached to this analysis are the calculations for the demand determination, see **Attachment 5- Wastewater Demand Calculations.**

The process for estimating the wastewater demand is as follows.

- Number of LUEs = Building Square Footage / 1,660 Square Feet per LUE
- Number of People = 2.5 People per LUE x Number of LUEs
- Average Dry Weather Flow = Base Wastewater Flow (BWF) + Groundwater Infiltration (GWI)
- BWF = Number of People x 175 gallons per day (gpd) per person
- GWI = 25% of BWF for non-residential
- Peaking Factor for Dry Weather Flow = $2.8(BWF)^{-0.0732}$
- Rainfall Dependent Inflow & Infiltration (RDII) = Acreage x 1000 gpd per acre
- Peak Wet Weather Flow = PF x DWF + RDII

2.2 Existing Wastewater Utilities

The existing wastewater infrastructure for this area is intended to be collected with the Dry Berry Creek DBC interceptor that will connect to the proposed Berry Creek interceptor (BCI) that is currently in the construction bidding phase. The proposed DBC and BCI will convey wastewater flows to the existing Pecan Branch Wastewater Treatment Facility.

Currently, there is an existing 12" water line, see Attachment 7 – Existing GUS Utilities. This information was obtained from the Georgetown utility system GIS system and correlated with the topographic survey conducted. The existing water line borders The Trails, LLC property (Tract R039052).

There is also an existing force main that is also located on The Trails, LLC property. This force main borders the property line between the Trails, LLC Property and Speedy Stop Food Stores, LTD's Property (Tract 315061).

The proposed collection system will need to cross the existing water line as well as the existing force main in order to serve the proposed development.

2.3 Wastewater Capacity Analysis & Recommended Improvements

The City of Georgetown (the City) wastewater design criteria system is as follows:

- Lines less than 15" in diameter stay below 65% of the capacity of the pipe flowing full during Peak Dry Weather Flow (PDWF).

- Lines less than 15" in diameter stay below 85% of the capacity of the pipe flowing full during Peak Wet Weather Flows (PWWF).

- Lines greater than 18" in diameter stay below 80% of the capacity of the pipe flowing full during PWWF.

A current wastewater master plan (WWMP) wastewater conveyance model was provided. In this model, the City had modelled the proposed DBCI to accommodate the additional tracts that may tie into DBCI in the future. In this model, DBCI comprised of 36-inch and 12-inch sewer with a minimum slope of 0.325%. The City also modelled DBCI to tie into BCI on the Berry Creek Partners LP Properties (Tract R038978). These design requirements were implemented in the final DBCI design.

A service area map is included as **Attachment 7 – Existing Wastewater Service Area Map** which illustrates the existing service area. The existing wastewater lines estimated demand was based on current available information and design sizing criteria from the WWMP to determine available remaining capacity.

2.4 Recommended Improvements Design

The design criteria for the proposed sanitary sewer gravity collection lines is as follows:

Table 3 – Design Criteria

			Min. Velocity (fps)		Max. Velocity (fps)	
Pipe Size	**Min. Grade (%)**	**Max. Grade (%)**	**DWF**	**PWWF**	**DWF**	**PWWF**
8”	0.5%	8.40%	2.37	2.48	4.59	4.70
12”	0.20%	4.88%	2.05	2.09	3.53	3.70
36"	0.325%	1.12%	2.48	2.55	2.48	2.55

All flow is conveyed from the subject site to the Berry Creek Interceptor and then to the Pecan Branch WWTP by gravity. The proposed piping and structures have an expected life expectancy greater than 50 years in accordance with the City’s and TCEQ design standards.

There are no deviations from uniform grade, no curved lines in the sewage collection system, and no deviations from a straight alignment proposed without a manhole or cleanout.

2.5 Inflow & Infiltration Abatement Measures

The calculations for inflow & infiltration were completed in accordance with the City’s WWMP and are covered previously in the report. The proposed design is in accordance with the City’s design standards including that all proposed sanitary sewer manholes within the Recharge Zone will be water tight with watertight rings and covers to minimize inflow & infiltration.

2.6 Structural and Pipe Design

There are no significant structural design parameters to note for this project.

The pipe design is in accordance with all TCEQ and City guidelines as well as incorporating data from the geotechnical report from the area.

TABLE 1- PIPE DESCRIPTIONS

Pipe Diameter(Inches)	***Linear Feet (1)***	***Pipe Material (2)***	***Specifications (3)***
36	9,841	CCFRPM	ASTM D3262

Pipe Diameter(Inches)	*Linear Feet (1)*	*Pipe Material (2)*	*Specifications (3)*
12	1,920	PVC SDR 26	ASTM D3034
8	1,645	PVC SDR 26	ASTM D3034

2.7 Safety Considerations

Ample space for working areas is provided outside of the right of way and away from the direct flow of traffic. The design of this system is resistant to the 100-year flood. Proposed manholes are heavy duty traffic rated and bolted where required by the City's requirements. Piping in the system has ample cover as to not inhibit the structural integrity of any part of the system.

Westwood

Attachment 1 – Overall Aerial

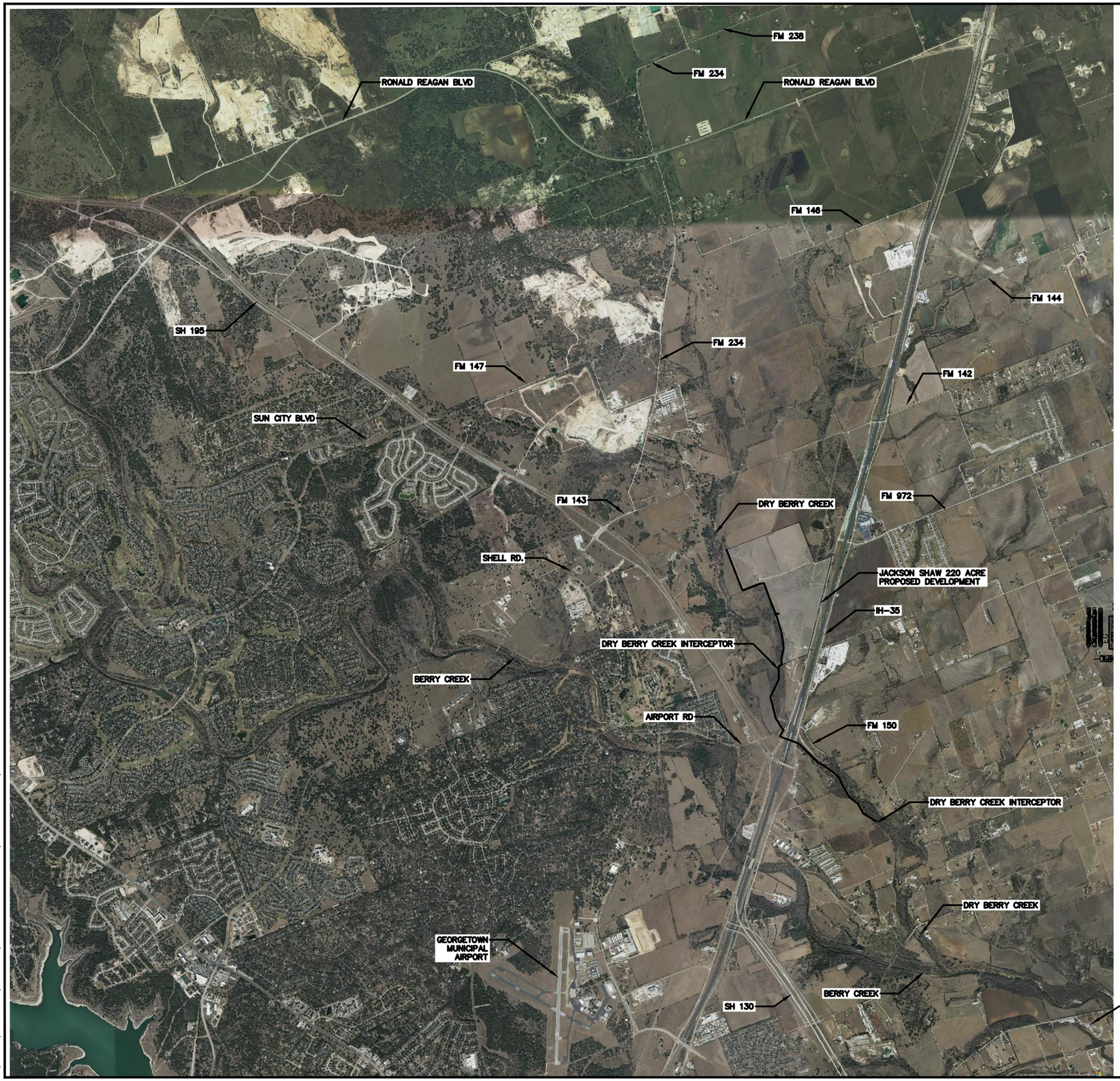

0 937.50 1,875 3,750 5,625

1"=1,875'

ISSUED FOR PRELIMINARY PRICING PURPOSES ONLY

(SUBJECT TO REVISION PRIOR TO CONSTRUCTION)

THESE DOCUMENTS HAVE BEEN PREPARED BY THE ENGINEER WITH THE INTENT OF COMPLYING WITH ALL CITY STANDARD REQUIREMENTS. THESE DOCUMENTS HAVE **NOT** BEEN APPROVED AND RELEASED FOR CONSTRUCTION BY THE CITY AS OF THIS DATE AND, THEREFORE, REVISIONS MAY BE REQUIRED PRIOR TO CONSTRUCTION. BY ANY USE OF THESE DOCUMENTS, THE USER AFFIRMS THEIR UNDERSTANDING OF THE PRELIMINARY STATUS OF THE PLANS AND THE POTENTIAL FOR REVISION PRIOR TO ANY CONSTRUCTION.

Pacheco Koch
8701 N MOPAC EXPY, SUITE 320
AUSTIN, TX 78759 512.485.0831
TX REG. ENGINEERING FIRM F-469
TX REG. SURVEYING FIRM LS-10008000

OVERALL AERIAL EXHIBIT

DESIGN	DRAWN	DATE	SCALE	NOTES	FILE	NO.
JWV	MS	DEC 2023	1"=1,875'			

JACKSON SHAW 220 ACRES - DRY BERRY CREEK WASTEWATER INTERCEPTOR

MSHARMA
12/6/2023 5:28 PM
M:\2WG-46\4670-22.676\SUBMITTALS\2023 06 13 SCS APPLICATION\ENGINEERING REPORT\OVERALL AERIAL.DWG

Westwood

Attachment 2 – FEMA Firm Maps

National Flood Hazard Layer FIRMette

FEMA

97°38'59"W 30°42'10"N

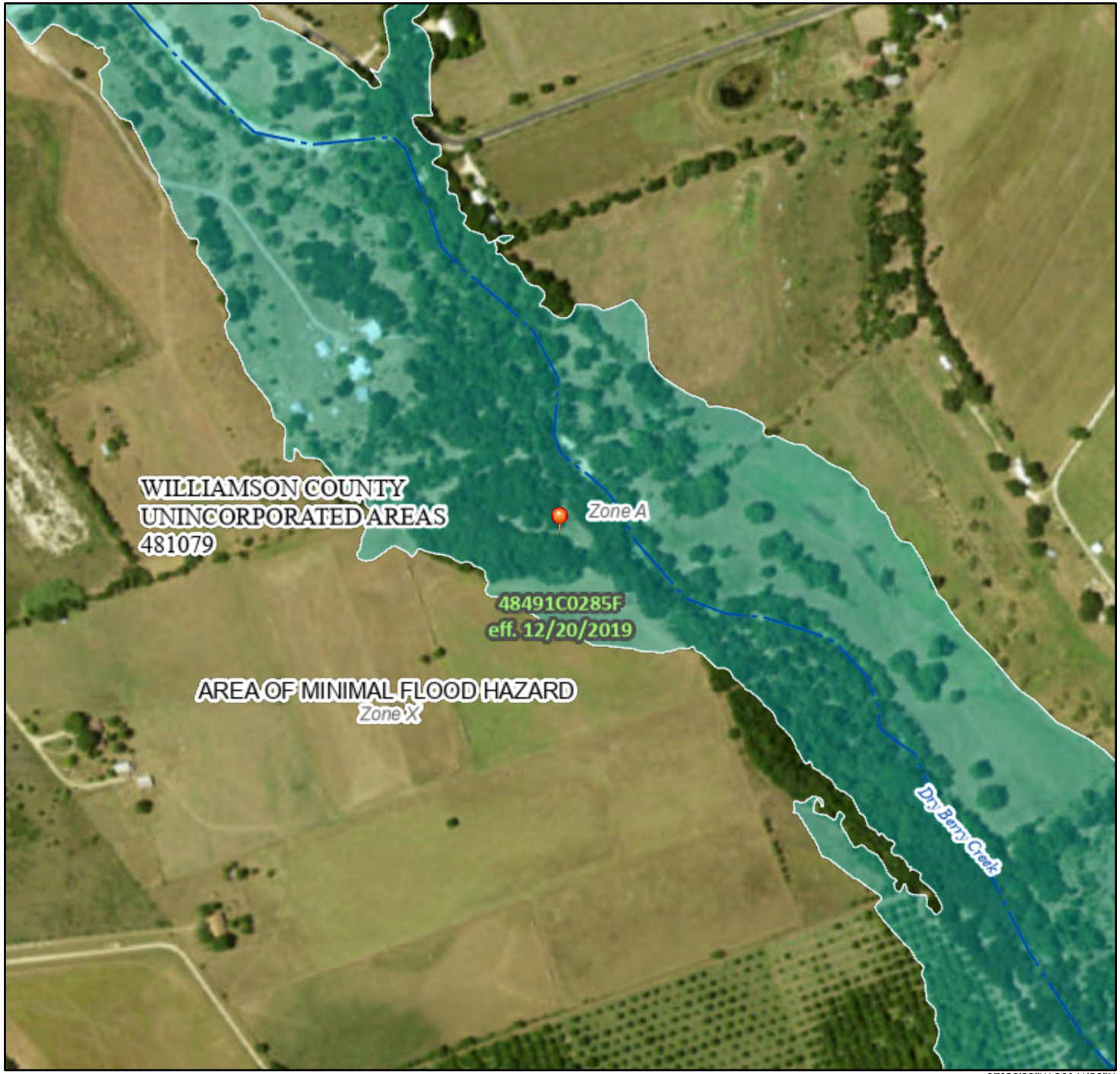

97°38'22"W 30°41'39"N

Feet

0 250 500 1,000 1,500 2,000

1:6,000

Basemap Imagery Source: USGS National Map 2023

Legend

SEE FIS REPORT FOR DETAILED LEGEND AND INDEX MAP FOR FIRM PANEL LAYOUT

SPECIAL FLOOD HAZARD AREAS
- Without Base Flood Elevation (BFE) *Zone A, V, A99*
- With BFE or Depth *Zone AE, AO, AH, VE, AR*
- Regulatory Floodway

OTHER AREAS OF FLOOD HAZARD
- 0.2% Annual Chance Flood Hazard, Areas of 1% annual chance flood with average depth less than one foot or with drainage areas of less than one square mile *Zone X*
- Future Conditions 1% Annual Chance Flood Hazard *Zone X*
- Area with Reduced Flood Risk due to Levee. See Notes. *Zone X*
- Area with Flood Risk due to Levee *Zone D*

OTHER AREAS
- NO SCREEN Area of Minimal Flood Hazard *Zone X*
- Effective LOMRs
- Area of Undetermined Flood Hazard *Zone D*

GENERAL STRUCTURES
- Channel, Culvert, or Storm Sewer
- Levee, Dike, or Floodwall

OTHER FEATURES
- 20.2 Cross Sections with 1% Annual Chance
- 17.5 Water Surface Elevation
- Coastal Transect
- 513 Base Flood Elevation Line (BFE)
- Limit of Study
- Jurisdiction Boundary
- Coastal Transect Baseline
- Profile Baseline
- Hydrographic Feature

MAP PANELS
- Digital Data Available
- No Digital Data Available
- Unmapped

N

The pin displayed on the map is an approximate point selected by the user and does not represent an authoritative property location.

This map complies with FEMA's standards for the use of digital flood maps if it is not void as described below. The basemap shown complies with FEMA's basemap accuracy standards

The flood hazard information is derived directly from the authoritative NFHL web services provided by FEMA. This map was exported on 12/6/2023 at 6:45 PM and does not reflect changes or amendments subsequent to this date and time. The NFHL and effective information may change or become superseded by new data over time.

This map image is void if the one or more of the following map elements do not appear: basemap imagery, flood zone labels, legend, scale bar, map creation date, community identifiers, FIRM panel number, and FIRM effective date. Map images for unmapped and unmodernized areas cannot be used for regulatory purposes.

National Flood Hazard Layer FIRMette

FEMA

97°39'22"W 30°42'33"N



97°38'45"W 30°42'2"N

0 250 500 1,000 1,500 2,000 Feet

1:6,000

Basemap Imagery Source: USGS National Map 2023

Legend

SEE FIS REPORT FOR DETAILED LEGEND AND INDEX MAP FOR FIRM PANEL LAYOUT

SPECIAL FLOOD HAZARD AREAS
- Without Base Flood Elevation (BFE) *Zone A, V, A99*
- With BFE or Depth *Zone AE, AO, AH, VE, AR*
- Regulatory Floodway

OTHER AREAS OF FLOOD HAZARD
- 0.2% Annual Chance Flood Hazard, Areas of 1% annual chance flood with average depth less than one foot or with drainage areas of less than one square mile *Zone X*
- Future Conditions 1% Annual Chance Flood Hazard *Zone X*
- Area with Reduced Flood Risk due to Levee. See Notes. *Zone X*
- Area with Flood Risk due to Levee *Zone D*

OTHER AREAS
- NO SCREEN Area of Minimal Flood Hazard *Zone X*
- Effective LOMRs
- Area of Undetermined Flood Hazard *Zone D*

GENERAL STRUCTURES
- Channel, Culvert, or Storm Sewer
- Levee, Dike, or Floodwall

OTHER FEATURES
- 20.2 / 17.5 Cross Sections with 1% Annual Chance / Water Surface Elevation
- Coastal Transect
- Base Flood Elevation Line (BFE)
- Limit of Study
- Jurisdiction Boundary
- Coastal Transect Baseline
- Profile Baseline
- Hydrographic Feature

MAP PANELS
- Digital Data Available
- No Digital Data Available
- Unmapped

N

The pin displayed on the map is an approximate point selected by the user and does not represent an authoritative property location.

This map complies with FEMA's standards for the use of digital flood maps if it is not void as described below. The basemap shown complies with FEMA's basemap accuracy standards

The flood hazard information is derived directly from the authoritative NFHL web services provided by FEMA. This map was exported on 12/6/2023 at 6:47 PM and does not reflect changes or amendments subsequent to this date and time. The NFHL and effective information may change or become superseded by new data over time.

This map image is void if the one or more of the following map elements do not appear: basemap imagery, flood zone labels, legend, scale bar, map creation date, community identifiers, FIRM panel number, and FIRM effective date. Map images for unmapped and unmodernized areas cannot be used for regulatory purposes.

National Flood Hazard Layer FIRMette

FEMA

97°39'28"W 30°42'56"N



97°38'51"W 30°42'25"N

0 250 500 1,000 1,500 2,000 Feet

1:6,000

Basemap Imagery Source: USGS National Map 2023

Legend

SEE FIS REPORT FOR DETAILED LEGEND AND INDEX MAP FOR FIRM PANEL LAYOUT

SPECIAL FLOOD HAZARD AREAS
- Without Base Flood Elevation (BFE) *Zone A, V, A99*
- With BFE or Depth *Zone AE, AO, AH, VE, AR*
- Regulatory Floodway

OTHER AREAS OF FLOOD HAZARD
- 0.2% Annual Chance Flood Hazard, Areas of 1% annual chance flood with average depth less than one foot or with drainage areas of less than one square mile *Zone X*
- Future Conditions 1% Annual Chance Flood Hazard *Zone X*
- Area with Reduced Flood Risk due to Levee. See Notes. *Zone X*
- Area with Flood Risk due to Levee *Zone D*

OTHER AREAS
- NO SCREEN Area of Minimal Flood Hazard *Zone X*
- Effective LOMRs
- Area of Undetermined Flood Hazard *Zone D*

GENERAL STRUCTURES
- Channel, Culvert, or Storm Sewer
- Levee, Dike, or Floodwall

OTHER FEATURES
- 20.2 Cross Sections with 1% Annual Chance
- 17.5 Water Surface Elevation
- Coastal Transect
- 513 Base Flood Elevation Line (BFE)
- Limit of Study
- Jurisdiction Boundary
- Coastal Transect Baseline
- Profile Baseline
- Hydrographic Feature

MAP PANELS
- Digital Data Available
- No Digital Data Available
- Unmapped

N

The pin displayed on the map is an approximate point selected by the user and does not represent an authoritative property location.

This map complies with FEMA's standards for the use of digital flood maps if it is not void as described below. The basemap shown complies with FEMA's basemap accuracy standards

The flood hazard information is derived directly from the authoritative NFHL web services provided by FEMA. This map was exported on 12/6/2023 at 6:48 PM and does not reflect changes or amendments subsequent to this date and time. The NFHL and effective information may change or become superseded by new data over time.

This map image is void if the one or more of the following map elements do not appear: basemap imagery, flood zone labels, legend, scale bar, map creation date, community identifiers, FIRM panel number, and FIRM effective date. Map images for unmapped and unmodernized areas cannot be used for regulatory purposes.

National Flood Hazard Layer FIRMette

FEMA

97°39'35"W 30°43'15"N

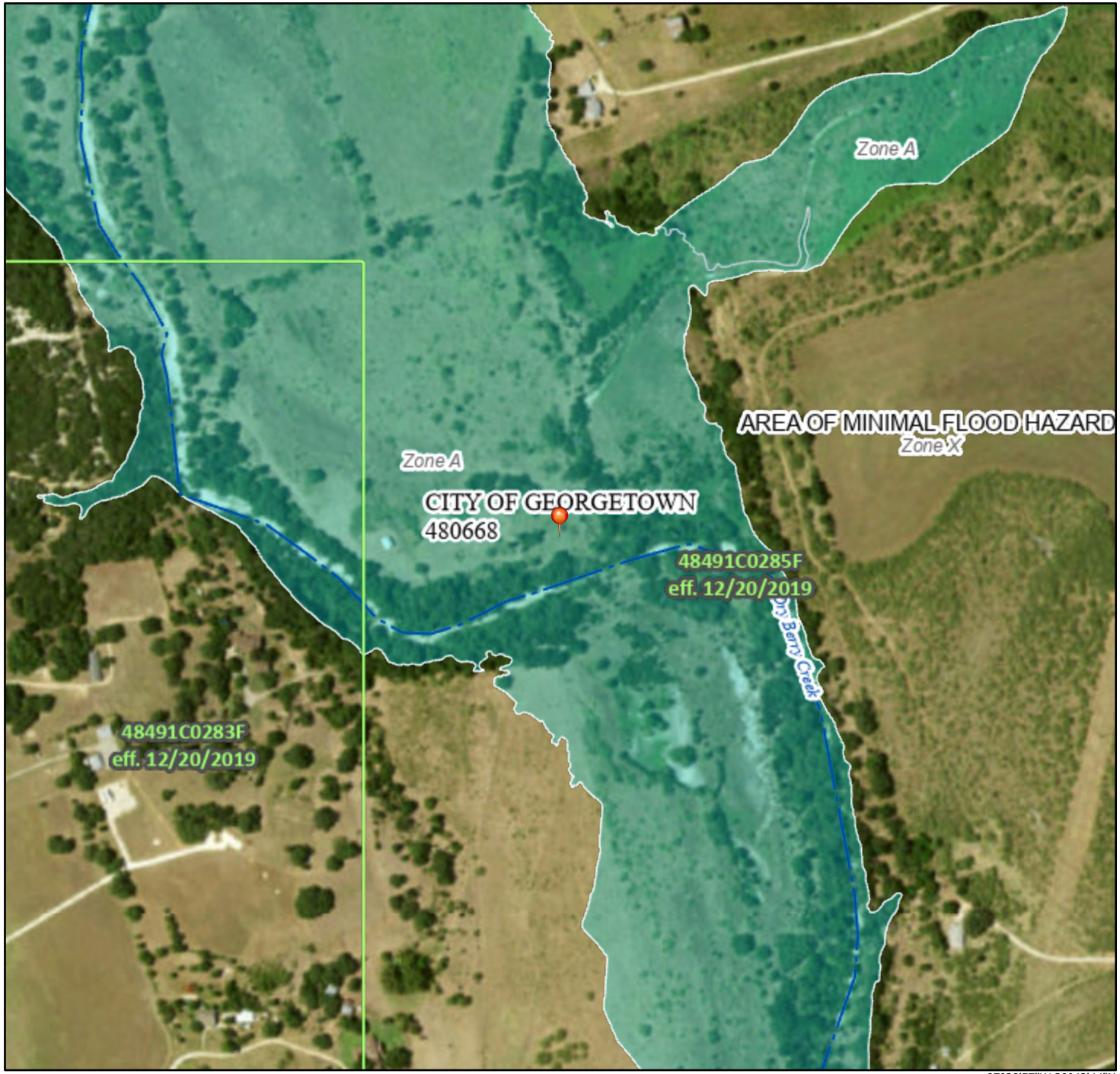

97°38'57"W 30°42'44"N

0 250 500 1,000 1,500 2,000 Feet

1:6,000

Basemap Imagery Source: USGS National Map 2023

Legend

SEE FIS REPORT FOR DETAILED LEGEND AND INDEX MAP FOR FIRM PANEL LAYOUT

SPECIAL FLOOD HAZARD AREAS
- Without Base Flood Elevation (BFE) *Zone A, V, A99*
- With BFE or Depth *Zone AE, AO, AH, VE, AR*
- Regulatory Floodway

OTHER AREAS OF FLOOD HAZARD
- 0.2% Annual Chance Flood Hazard, Areas of 1% annual chance flood with average depth less than one foot or with drainage areas of less than one square mile *Zone X*
- Future Conditions 1% Annual Chance Flood Hazard *Zone X*
- Area with Reduced Flood Risk due to Levee. See Notes. *Zone X*
- Area with Flood Risk due to Levee *Zone D*

OTHER AREAS
- NO SCREEN — Area of Minimal Flood Hazard *Zone X*
- Effective LOMRs
- Area of Undetermined Flood Hazard *Zone D*

GENERAL STRUCTURES
- Channel, Culvert, or Storm Sewer
- Levee, Dike, or Floodwall

OTHER FEATURES
- 20.2 / 17.5 — Cross Sections with 1% Annual Chance / Water Surface Elevation
- Coastal Transect
- Base Flood Elevation Line (BFE)
- Limit of Study
- Jurisdiction Boundary
- Coastal Transect Baseline
- Profile Baseline
- Hydrographic Feature

MAP PANELS
- Digital Data Available
- No Digital Data Available
- Unmapped

N

The pin displayed on the map is an approximate point selected by the user and does not represent an authoritative property location.

This map complies with FEMA's standards for the use of digital flood maps if it is not void as described below. The basemap shown complies with FEMA's basemap accuracy standards

The flood hazard information is derived directly from the authoritative NFHL web services provided by FEMA. This map was exported on 12/6/2023 at 6:49 PM and does not reflect changes or amendments subsequent to this date and time. The NFHL and effective information may change or become superseded by new data over time.

This map image is void if the one or more of the following map elements do not appear: basemap imagery, flood zone labels, legend, scale bar, map creation date, community identifiers, FIRM panel number, and FIRM effective date. Map images for unmapped and unmodernized areas cannot be used for regulatory purposes.

Westwood

Attachment 3 – Edwards Aquifer Zone Exhibit

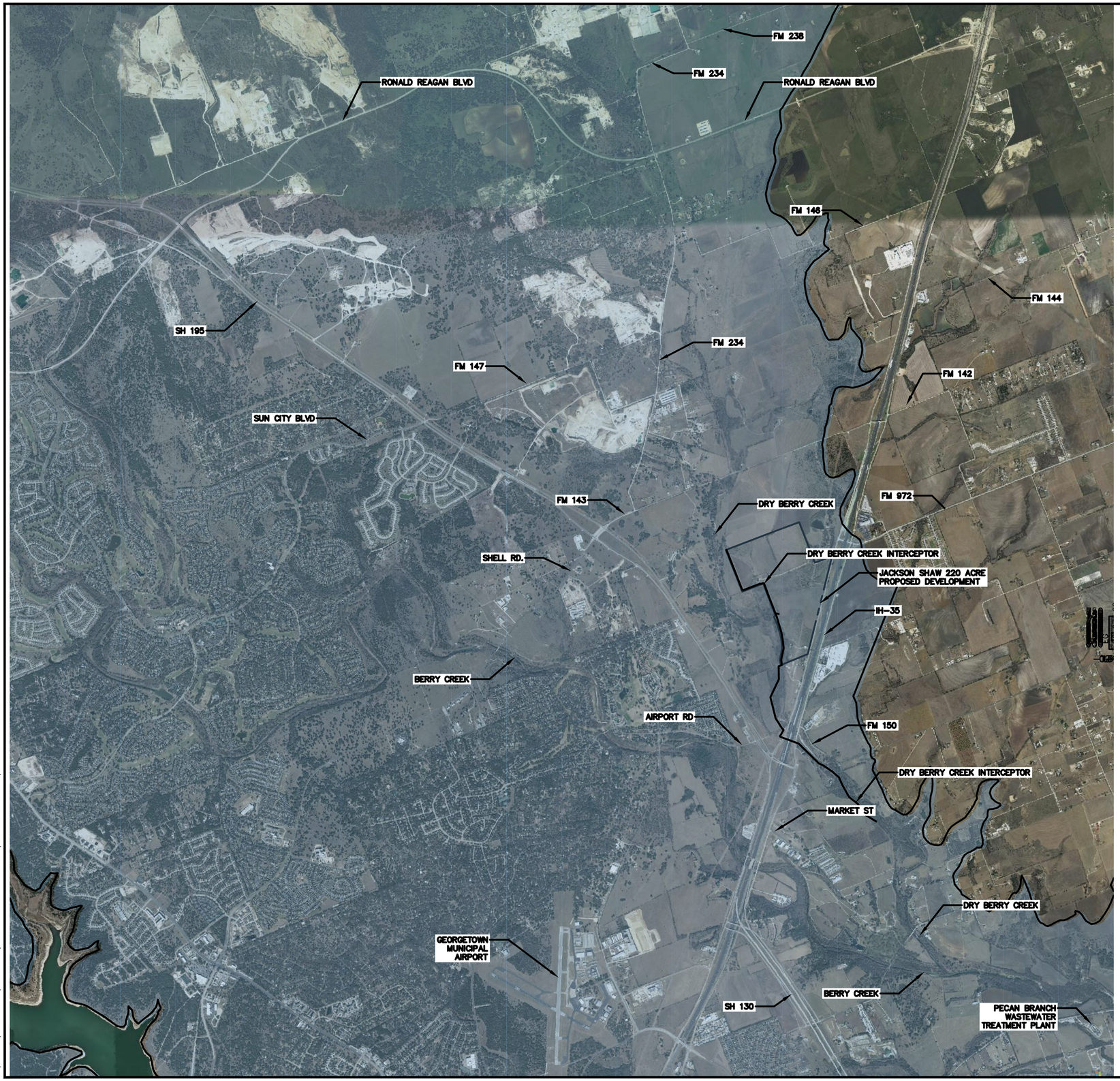

0 937.50 1,875 3,750 5,625

1"=1,875'

EDWARDS AQUIFER RECHARGE ZONE

ISSUED FOR PRELIMINARY PRICING PURPOSES ONLY
(SUBJECT TO REVISION PRIOR TO CONSTRUCTION)

THESE DOCUMENTS HAVE BEEN PREPARED BY THE ENGINEER WITH THE INTENT OF COMPLYING WITH ALL CITY STANDARD REQUIREMENTS. THESE DOCUMENTS HAVE **NOT** BEEN APPROVED AND RELEASED FOR CONSTRUCTION BY THE CITY AS OF THIS DATE AND, THEREFORE, REVISIONS MAY BE REQUIRED PRIOR TO CONSTRUCTION. BY ANY USE OF THESE DOCUMENTS, THE USER AFFIRMS THEIR UNDERSTANDING OF THE PRELIMINARY STATUS OF THE PLANS AND THE PRELIMINARY STATUS OF THE PLANS AND THE POTENTIAL FOR REVISION PRIOR TO ANY CONSTRUCTION.

Pacheco Koch
8701 N MOPAC EXPY, SUITE 320
AUSTIN, TX 78759 512.485.0831
TX REG. ENGINEERING FIRM F-469
TX REG. SURVEYING FIRM LS-10008000

EDWARDS AQUIFER RECHARGE ZONE EXHIBIT

DESIGN	DRAWN	DATE	SCALE	NOTES	FILE	NO.
JWV	MS	DEC 2023	1"=1,875'			EX3

JACKSON SHAW 220 ACRES - DRY BERRY CREEK WASTEWATER INTERCEPTOR

MSHARMA
12/6/2023 6:07 PM
M:\DWG-46\4670-22.676\SUBMITTALS\2023 06 13 SCS APPLICATION\ENGINEERING REPORT\EDWARDS AQUIFER EXHIBIT.DWG

Westwood

Attachment 4 – Jackson Shaw Development Plan

POLLUTION CONTROL GENERAL NOTES

1. THIS PLAN HAS BEEN PREPARED TO PROVIDE MEANS TO PREVENT OR MINIMIZE POLLUTION OF STORM WATER.
2. THE CONSTRUCTION ACTIVITY INCLUDED IN THIS PLAN WILL INCLUDE:
   - 2.A. CLEARING AND GRUBBING
   - 2.B. ROUGH GRADING
   - 2.C. FINAL GRADING
   - 2.D. UTILITY INSTALLATION
   - 2.E. PAVEMENT INSTALLATION
   - 2.F. BUILDING CONSTRUCTION
3. THE TOTAL ESTIMATED LAND AREA TO BE DISTURBED IS 33.11 ACRES.
4. THE ESTIMATED RUNOFF COEFFICIENT UPON COMPLETION OF THE PROJECT IS 0.80.
5. THE STORM WATER EXITING THE SITE IS COLLECTED IN AN EXISTING DRAINAGE SYSTEM MAINTAINED BY THE CITY OF GEORGETOWN, TEXAS.
6. THE SOILS ON THE SITE ARE GENERALLY EXPANSIVE CLAYS.
7. THE CONTRACTOR SHALL PROVIDE AND MAINTAIN EROSION PROTECTION AROUND THE WORK AREA PERIMETER AND AT ALL INLET MOUTHS PRIOR TO COMMENCING WORK AND UNTIL THE WORK AREA HAS BEEN STABILIZED.
8. THE CONTRACTOR WILL REMOVE ALL EXCESS SOIL FROM CONSTRUCTION VEHICLES PRIOR TO EXITING THE SITE.
9. ALL DISTURBED AREAS WHICH WILL NOT BE RE-DISTURBED MUST BEGIN BEING STABILIZED IMMEDIATELY BY THE CONTRACTOR TO CONTROL EROSION. THE CONTRACTOR HAS 14 DAYS TO HAVE ALL STABILIZATION AND EROSION CONTROL DEVICES IN PLACE.
10. THE CONTRACTOR SHALL UNDERTAKE PROPER METHODS TO REDUCE DUST GENERATION FROM THE SITE.
11. THE CONTRACTOR MUST COMPLY WITH FEDERAL, STATE AND LOCAL REGULATIONS REGARDING SEDIMENT AND EROSION CONTROL.
12. A COPY OF THIS PLAN, AS PART OF THE SWPPP, MUST BE KEPT AT THE CONSTRUCTION FACILITY DURING THE ENTIRE CONSTRUCTION PERIOD.
13. CONSTRUCTION SEQUENCING MUST PROVIDE FOR THE EXCAVATION OF AN ON-SITE BASIN AS A SEDIMENT COLLECTION BASIN PRIOR TO THE DISTURBANCE OF GREATER THAN 10 ACRES OF LAND.
14. ALL FINISHED GRADES ARE TO BE HYDROMULCHED, SPOT SODDED OR SEEDED AND WATERED UNTIL GROWTH IS ESTABLISHED ON AND OFF-SITE.
15. A PIT OR WASH OUT BASIN SHALL BE CONSTRUCTED ON-SITE BY THE CONTRACTOR FOR THE "WASH OUT" OF CONCRETE TRUCKS.
16. A BERM OR OTHER SPILL PROTECTION MEASURE SHALL BE USED FOR ANY TEMPORARY FUEL STORAGE TANK ON-SITE.
17. IF "SUMP" PUMPS ARE USED TO REMOVE WATER FROM EXCAVATED AREAS, FILTER THE DISCHARGE TO REMOVE SEDIMENT AND OTHER POLLUTANTS BEFORE THE WATER LEAVES THE SITE.
18. TO PREVENT DAMAGE TO VEGETATION IN DOWNSTREAM WATER COURSES, LIMIT ANY PROPOSED LIME STABILIZATION OPERATIONS TO THAT WHICH CAN BE MIXED AND COMPACTED BY THE END OF EACH WORK DAY. GEOTEXTILE FABRIC IS NOT EFFECTIVE IN FILTERING LIME SINCE THE GRAIN SIZE IS SMALLER THAN THE OPENING IN THE FABRIC.
19. VEHICLE PARKING AREAS, STAGING AREAS, STOCKPILES, SPOILS, ETC. SHALL BE LOCATED SUCH THAT THEY WILL NOT ADVERSELY AFFECT STORM WATER QUALITY. OTHERWISE, COVERING OR ENCIRCLING THE AREAS WITH PROTECTIVE MEASURES SHALL BE NECESSARY.
20. STORE ALL TRASH AND BUILDING MATERIALS WASTE IN AN ENCLOSURE UNTIL IT CAN BE PROPERLY DISPOSED OF AT THE APPROPRIATE OFF-SITE FACILITIES.
21. TRACKING OF SEDIMENT OFF-SITE BY TRUCK TRAFFIC SHALL BE HANDLED THROUGH REGULAR CLEANING.
22. INSPECTIONS SHALL BE CONDUCTED BY THE PERMITEE ONCE EVERY TWO WEEKS AND WITHIN 24 HOURS AFTER STORM EVENT OF 0.5 INCHES OR MORE OR ONCE PER WEEK ON A SPECIFIC PRE-DEFINED DAY. THE INSPECTIONS WILL INCLUDE:
   - 22.A. DISTURBED AREAS OF THE SITE THAT HAVE NOT BEEN STABILIZED.
   - 22.B. AREAS USED FOR STORAGE OF MATERIALS THAT ARE EXPOSED TO PRECIPITATION.
   - 22.C. STRUCTURAL CONTROL MEASURES.
   - 22.D. LOCATIONS WHERE VEHICLES ENTER OR EXIT THE SITE.
   - 22.E. IDENTIFICATIONS OF MEASURES THAT NEED TO BE MAINTAINED, MODIFIED, OR ADDED TO CORRECT PROBLEMS.
23. CONTRACTOR SHALL MINIMIZE THE EXPOSURE OF BUILDING MATERIALS, BUILDING PRODUCTS, CONSTRUCTION WASTES, TRASH, LANDSCAPE MATERIALS, FERTILIZERS, PESTICIDES, HERBICIDES, DETERGENTS, SANITARY WASTE AND OTHER MATERIALS PRESENT ON THE SITE TO PRECIPITATION AND TO STORMWATER.
24. PERMANENTLY STABILIZE EXPOSED SOIL, WITHIN AND ADJACENT TO THE SITE, THAT IS DISTURBED BY VEHICLES, GRADING AND OTHER CONSTRUCTION ACTIVITIES.
25. CONTAIN ALL RUNOFF FROM MATERIAL USED IN SUBGRADE STABILIZATION.
26. MATERIAL STOCKPILES SHALL BE COVERED BY PLASTIC OR SURROUNDED BY EROSION CONTROL STRUCTURES TO CONTROL SEDIMENT RELEASES.
27. CONTRACTOR SHALL PROTECT SLOPES IN EXCESS OF 15% IN ORDER TO MINIMIZE EROSION OF SOILS AND THE DISTURBANCE OF SLOPES.
28. VEGETATION TO BE PRESERVED WHERE EVER POSSIBLE TO HELP REDUCE EROSION. WHERE VEGETATION MUST BE REMOVED, PRESERVE NATIVE TOPSOIL IN ALL AREAS POSSIBLE.
29. MINIMIZE SOIL COMPACTION IN AREAS INTENDED FOR POST CONSTRUCTION PERVIOUS SURFACE.

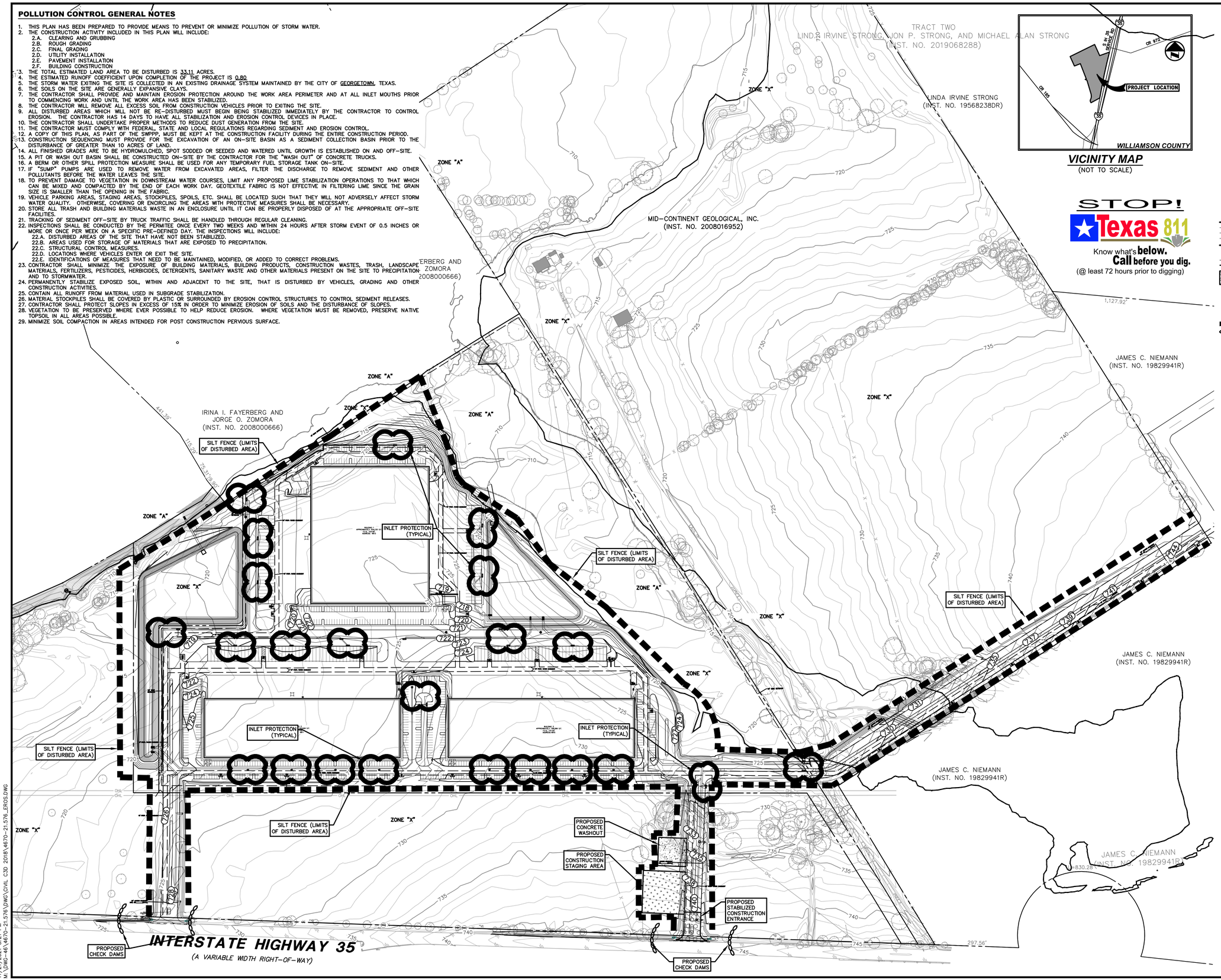

VICINITY MAP
(NOT TO SCALE)

STOP!
Texas 811
Know what's **below.**
Call before you dig.
(@ least 72 hours prior to digging)

0 100 200 400 600
GRAPHIC SCALE IN FEET
1"=200'

LEGEND

- BOLLARD
- ELECTRIC METER
- POWER POLE
- LIGHT STANDARD
- WATER METER
- WATER VALVE
- IRRIGATION CONTROL VALVE
- FIRE HYDRANT
- CLEANOUT
- MANHOLE
- TRAFFIC SIGNAL CONTROL
- TRAFFIC SIGNAL POLE
- TELEPHONE BOX
- FLOOD LIGHT
- FLAG POLE
- TRAFFIC SIGN
- IRS (C.M.) 1/2-INCH IRON ROD W/"PACHECO KOCH" CAP SET CONTROLLING MONUMENT
- PROPERTY LINE
- FENCE
- OVERHEAD UTILITY LINE
- EXIST CONTOUR
- 450 PROPOSED CONTOUR
- PROPOSED DRAINAGE FLOW DIRECTION
- FEMA FLOOD PLAIN
- 100 YEAR FLOOD PLAIN
- PROPOSED CONSTRUCTION ENTRANCE
- INLET PROTECTION
- SILT FENCE (LIMITS OF DISTURBED AREA) CHECK DAM
- CONCRETE TRUCK WASHOUT PIT (TO BE FIELD LOCATED)

Pacheco Koch
8701 N. MOPAC EXPY, SUITE 320
AUSTIN, TX 78759
T: 512.485.0831
TX REG. ENGINEERING FIRM F-469
TX REG. SURVEYING FIRM LS-10008000

REVISIONS

NO.	DATE	DESCRIPTION	BY

JACKSON SHAW - PHASE 1
4811, 4813, & 4815 N IH-35
GEORGETOWN, TEXAS, 78633

EROSION CONTROL PLAN

STATE OF TEXAS
HOLLIS ANN SCHEFFLER
136049
LICENSED
PROFESSIONAL ENGINEER

THE SEAL APPEARING ON THIS DOCUMENT WAS AUTHORIZED BY SUPERVISION OF HOLLIS ANN SCHEFFLER, P.E. 136049 ON 11/21/2021. ALTERATION OF A SEALED DOCUMENT WITHOUT PROPER NOTIFICATION TO THE RESPONSIBLE ENGINEER IS AN OFFENSE UNDER THE TEXAS ENGINEERING PRACTICE ACT.

DESIGN	DRAWN	DATE
ECH	NBB	NOV 2021

SHEET NO.
9

XXXX-XX-SDP

EHALL
11/21/2021 3:21 PM
M:\DWG-46\4670-21.576\DWG\CIVIL C3D 2018\4670-21.576_EROS.DWG

PK-4670-21.576_EROS.DWG

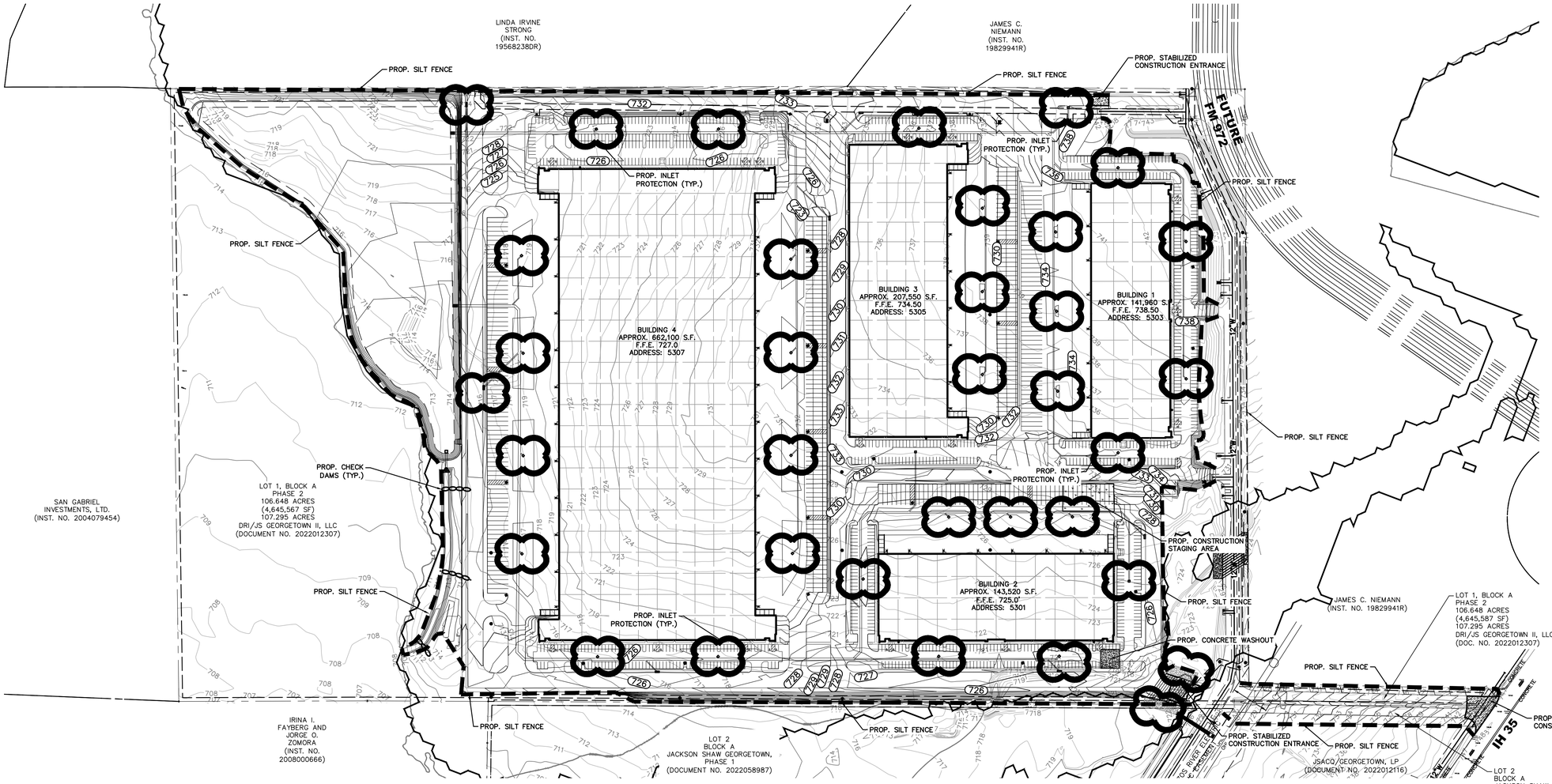

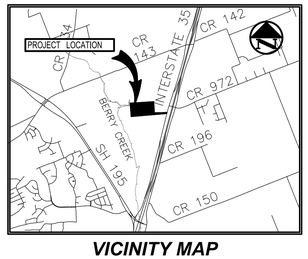

VICINITY MAP
(1:5,000)

0 50 100 200 300
GRAPHIC SCALE IN FEET
1"=150'

LEGEND

- BOLLARD
- EM — ELECTRIC METER
- PP — POWER POLE
- LS — LIGHT STANDARD
- WM — WATER METER
- WV — WATER VALVE
- ICV — IRRIGATION CONTROL VALVE
- FH — FIRE HYDRANT
- CO — CLEANOUT
- MH — MANHOLE
- TSC — TRAFFIC SIGNAL CONTROL
- TSP — TRAFFIC SIGNAL POLE
- TELE — TELEPHONE BOX
- FLOOD LIGHT
- FP — FLAG POLE
- SIGN — TRAFFIC SIGN
- IRS (C.M.) — 1/2-INCH IRON ROD W/"PACHECO KOCH" CAP SET — CONTROLLING MONUMENT
- PROPERTY LINE
- X — FENCE
- OHL — OVERHEAD UTILITY LINE
- 613 — EXIST CONTOUR
- 450 — PROPOSED CONTOUR
- PROPOSED DRAINAGE FLOW DIRECTION
- PROPOSED CONSTRUCTION ENTRANCE
- INLET PROTECTION
- SILT FENCE (LIMITS OF DISTURBED AREA)
- CHECK DAM
- FEMA FLOODPLAIN
- CITY OF GEORGETOWN 100 YEAR FLOODPLAIN

POLLUTION CONTROL GENERAL NOTES

1. THIS PLAN HAS BEEN PREPARED TO PROVIDE MEANS TO PREVENT OR MINIMIZE POLLUTION OF STORM WATER.
2. THE CONSTRUCTION ACTIVITY INCLUDED IN THIS PLAN WILL INCLUDE:
   - 2.A. CLEARING AND GRUBBING
   - 2.B. ROUGH GRADING
   - 2.C. FINAL GRADING
   - 2.D. UTILITY INSTALLATION
   - 2.E. PAVEMENT INSTALLATION
   - 2.F. BUILDING CONSTRUCTION
3. THE TOTAL ESTIMATED LAND AREA TO BE DISTURBED IS 61.84 ACRES.
4. THE ESTIMATED RUNOFF COEFFICIENT UPON COMPLETION OF THE PROJECT IS 0.97.
5. THE STORM WATER EXITING THE SITE IS COLLECTED IN AN EXISTING DRAINAGE SYSTEM MAINTAINED BY THE CITY OF GEORGETOWN, TEXAS.
6. THE SOILS ON THE SITE ARE GENERALLY EXPANSIVE CLAYS.
7. THE CONTRACTOR SHALL PROVIDE AND MAINTAIN EROSION PROTECTION AROUND THE WORK AREA PERIMETER AND AT ALL INLET MOUTHS PRIOR TO COMMENCING WORK AND UNTIL THE WORK AREA HAS BEEN STABILIZED.
8. THE CONTRACTOR WILL REMOVE ALL EXCESS SOIL FROM CONSTRUCTION VEHICLES PRIOR TO EXITING THE SITE.
9. ALL DISTURBED AREAS WHICH WILL NOT BE RE-DISTURBED MUST BEGIN BEING STABILIZED IMMEDIATELY BY THE CONTRACTOR TO CONTROL EROSION. THE CONTRACTOR HAS 14 DAYS TO HAVE ALL STABILIZATION AND EROSION CONTROL DEVICES IN PLACE.
10. THE CONTRACTOR SHALL UNDERTAKE PROPER METHODS TO REDUCE DUST GENERATION FROM THE SITE.
11. THE CONTRACTOR MUST COMPLY WITH FEDERAL, STATE AND LOCAL REGULATIONS REGARDING SEDIMENT AND EROSION CONTROL.
12. A COPY OF THIS PLAN, AS PART OF THE SWPPP, MUST BE KEPT AT THE CONSTRUCTION FACILITY DURING THE ENTIRE CONSTRUCTION PERIOD.
13. CONSTRUCTION SEQUENCING MUST PROVIDE FOR THE EXCAVATION OF AN ON-SITE BASIN AS A SEDIMENT COLLECTION BASIN PRIOR TO THE DISTURBANCE OF GREATER THAN 10 ACRES OF LAND.
14. ALL FINISHED GRADES ARE TO BE HYDROMULCHED, SPOT SODDED OR SEEDED AND WATERED UNTIL GROWTH IS ESTABLISHED ON AND OFF-SITE.
15. A PIT OR WASH OUT BASIN SHALL BE CONSTRUCTED ON-SITE BY THE CONTRACTOR FOR THE "WASH OUT" OF CONCRETE TRUCKS.
16. A BERM OR OTHER SPILL PROTECTION MEASURE SHALL BE USED FOR ANY TEMPORARY FUEL STORAGE TANK ON-SITE.
17. IF "SUMP" PUMPS ARE USED TO REMOVE WATER FROM EXCAVATED AREAS, FILTER THE DISCHARGE TO REMOVE SEDIMENT AND OTHER POLLUTANTS BEFORE THE WATER LEAVES THE SITE.
18. TO PREVENT DAMAGE TO VEGETATION IN DOWNSTREAM WATER COURSES, LIMIT ANY PROPOSED LIME STABILIZATION OPERATIONS TO THAT WHICH CAN BE MIXED AND COMPACTED BY THE END OF EACH WORK DAY. GEOTEXTILE FABRIC IS NOT EFFECTIVE IN FILTERING LIME SINCE THE GRAIN SIZE IS SMALLER THAN THE OPENING IN THE FABRIC.
19. VEHICLE PARKING AREAS, STAGING AREAS, STOCKPILES, SPOILS, ETC. SHALL BE LOCATED SUCH THAT THEY WILL NOT ADVERSELY AFFECT STORM WATER QUALITY. OTHERWISE, COVERING OR ENCIRCLING THE AREAS WITH PROTECTIVE MEASURES SHALL BE NECESSARY.
20. STORE ALL TRASH AND BUILDING MATERIALS WASTE IN AN ENCLOSURE UNTIL IT CAN BE PROPERLY DISPOSED OF AT THE APPROPRIATE OFF-SITE FACILITIES.
21. TRACKING OF SEDIMENT OFF-SITE BY TRUCK TRAFFIC SHALL BE HANDLED THROUGH REGULAR CLEANING.
22. INSPECTIONS SHALL BE CONDUCTED BY THE PERMITEE ONCE EVERY TWO WEEKS AND WITHIN 24 HOURS AFTER STORM EVENT OF 0.5 INCHES OR MORE OR ONCE PER WEEK ON A SPECIFIC PRE-DEFINED DAY. THE INSPECTIONS WILL INCLUDE:
    - 22.A. DISTURBED AREAS OF THE SITE THAT HAVE NOT BEEN STABILIZED.
    - 22.B. AREAS USED FOR STORAGE OF MATERIALS THAT ARE EXPOSED TO PRECIPITATION.
    - 22.C. STRUCTURAL CONTROL MEASURES.
    - 22.D. LOCATIONS WHERE VEHICLES ENTER OR EXIT THE SITE.
    - 22.E. IDENTIFICATIONS OF MEASURES THAT NEED TO BE MAINTAINED, MODIFIED, OR ADDED TO CORRECT PROBLEMS.
23. CONTRACTOR SHALL MINIMIZE THE EXPOSURE OF BUILDING MATERIALS, BUILDING PRODUCTS, CONSTRUCTION WASTES, TRASH, LANDSCAPE MATERIALS, FERTILIZERS, PESTICIDES, HERBICIDES, DETERGENTS, SANITARY WASTE AND OTHER MATERIALS PRESENT ON THE SITE TO PRECIPITATION AND TO STORMWATER.
24. PERMANENTLY STABILIZE EXPOSED SOIL, WITHIN AND ADJACENT TO THE SITE, THAT IS DISTURBED BY VEHICLES, GRADING AND OTHER CONSTRUCTION ACTIVITIES.
25. CONTAIN ALL RUNOFF FROM MATERIAL USED IN SUBGRADE STABILIZATION.
26. MATERIAL STOCKPILES SHALL BE COVERED BY PLASTIC OR SURROUNDED BY EROSION CONTROL STRUCTURES TO CONTROL SEDIMENT RELEASES.
27. CONTRACTOR SHALL PROTECT SLOPES IN EXCESS OF 15% IN ORDER TO MINIMIZE EROSION OF SOILS AND THE DISTURBANCE OF SLOPES.
28. VEGETATION TO BE PRESERVED WHERE EVER POSSIBLE TO HELP REDUCE EROSION. WHERE VEGETATION MUST BE REMOVED, PRESERVE NATIVE TOPSOIL IN ALL AREAS POSSIBLE.
29. MINIMIZE SOIL COMPACTION IN AREAS INTENDED FOR POST CONSTRUCTION PERVIOUS SURFACE.

XXXX-XXX-SDP

Pacheco Koch
a Westwood company
8701 N. MOPAC EXPY ■ STE. 320 ■ AUSTIN, TX 78759 ■ 512.485.0831
TX REG. ENGINEERING FIRM F-469
TX REG. SURVEYING FIRM LS-10008000

REVISIONS

NO.	DATE	DESCRIPTION	BY

CROSS POINT - PHASE 2
5301, 5303, 5305, & 5307 N IH-35 SB
GEORGETOWN, TEXAS, 78633

EROSION CONTROL PLAN

STATE OF TEXAS
HOLLIS ANN SCHEFFLER
136049
LICENSED PROFESSIONAL ENGINEER

THE SEAL APPEARING ON THIS DOCUMENT WAS AUTHORIZED BY SUPERVISOR OF HOLLIS ANN SCHEFFLER, P.E. 136049 ON 12/19/22. ALTERATION OF A SEALED DOCUMENT WITHOUT PROPER NOTIFICATION TO THE RESPONSIBLE ENGINEER IS AN OFFENSE UNDER THE TEXAS ENGINEERING PRACTICE ACT.

DESIGN	DRAWN	DATE
HAS	NBB	DEC 2022

SHEET NO. 10

JASOMERA
12/19/2022 9:56 AM
M:\DWG-4\4670-22.587\DWG\CIVIL C3D 2018\4670-22.587_EROS.DWG

PK-4670-22.587_EROS.DWG

Westwood

Attachment 5 – Wastewater Demand Calculations

Jackson Shaw - Phase I

Total Building Size (Phase I)	488,669	SF
	11.22	Acre
Number of LUE's	294	LUE
Building Square footage/1660		
Number of People	736	People
*2.5 People per LUE * Number of LUE's*		
Base Water Flow (BWF)	**128,791**	**gpd**
	89	gpm
*Number of People * 175 gallons per day per person*		
Ground Water Infiltration (GWI)	32,198	gpd
	22	gpm
25% of BWF for non-residential		
Average Dry Weather Flow (DWF)	**160,988**	**gpd**
	112	gpm
BWF+GWI		
Peaking Factor for Dry Weather Flow (PF)	1.2	
$2.8(BWF)^{-0.0732}$		
Rainfall Dependant Inflow and Infiltration (RDII)	11,218	gpd
	8	gpm
*Acerage*1000 gpd per acre*		
Peak Wet Weather Flow	**201,725**	**gpd**
	140	gpm
*PF*DWF+RDII*		

Jackson Shaw Phase I + Phase II

Total Building Size (Phase I+Phase II)	1,643,880	SF
	37.74	Acre
Number of LUE's	990	LUE
Building Square footage/1660		
Number of People	2,476	People
*2.5 People per LUE * Number of LUE's*		
Base Water Flow (BWF)	**433,252**	**gpd**
	301	gpm
*Number of People * 175 gallons per day per person*		
Ground Water Infiltration (GWI)	108,313	gpd
	75	gpm
25% of BWF for non-residential		
Average Dry Weather Flow (DWF)	**541,564**	**gpd**
	376	gpm
BWF+GWI		
Peaking Factor for Dry Weather Flow (PF)	1.1	
$2.8(BWF)^{-0.0732}$		
Rainfall Dependant Inflow and Infiltration (RDII)	37,738	gpd
	26	gpm
*Acerage*1000 gpd per acre*		
Peak Wet Weather Flow	**624,145**	**gpd**
	433	gpm
*PF*DWF+RDII*		

Westwood

Attachment 6 – WWTP Capacity Verification

Manika Sharma

From: Mayra Cantu <Mayra.Cantu@georgetown.org>
Sent: Thursday, November 10, 2022 8:00 AM
To: Jacob Valentien; David Herzog
Cc: Chris Pousson; Wesley Wright; David Munk; Chelsea Solomon; Miles Terry; Manika Sharma; Clayton Strolle
Subject: RE: [EXTERNAL] RE: Jackson Shaw - Dry Berry Creek Interceptor Preliminary Evaluation

Jacob,

I was able to confirm with our team that your summary is accurate.

Mayra Cantu, MPA
Strategic Support Manager
Systems Engineering
O: 512.930.6740
C: 214.537.7272

City of Georgetown Municipal Complex
300-1 Industrial Ave

GEORGETOWN
TEXAS
more than welcome

"We value Trust, Professionalism, Teamwork, Communication, and
Work/Life Balance in order to provide outstanding service to our community"

From: Jacob Valentien <Jacob.Valentien@westwoodps.com>
Sent: Wednesday, November 9, 2022 2:59 PM
To: Mayra Cantu <Mayra.Cantu@georgetown.org>; David Herzog <David.Herzog@georgetown.org>
Cc: Chris Pousson <chris.pousson@georgetown.org>; Wesley Wright <Wesley.Wright@georgetown.org>; David Munk <david.munk@georgetown.org>; Chelsea Solomon <Chelsea.Solomon@georgetown.org>; Miles Terry <mterry@jacksonshaw.com>; Manika Sharma <Manika.Sharma@westwoodps.com>; Clayton Strolle <Clayton.Strolle@westwoodps.com>
Subject: RE: [EXTERNAL] RE: Jackson Shaw - Dry Berry Creek Interceptor Preliminary Evaluation

[EXTERNAL EMAIL]

Mayra,

I just wanted to send a follow up to see if I could get any confirmation from the City that the items described below accurately summarize the information provided. We are starting the design process now.

Thanks,

Jacob Valentien
Senior Project Manager
jacob.valentien@westwoodps.com

direct (512) 485-0831
main 512.485.0831
cell (713) 829-6003

Westwood
8701 N. Mopac Expy Suite 320
Austin, TX 78759

westwoodps.com
(888) 937-5150

From: Jacob Valentien
Sent: Wednesday, October 26, 2022 4:34 PM
To: 'Mayra Cantu' <Mayra.Cantu@georgetown.org>; David Herzog <David.Herzog@georgetown.org>
Cc: Chris Pousson <chris.pousson@georgetown.org>; Wesley Wright <Wesley.Wright@georgetown.org>; David Munk <david.munk@georgetown.org>; Chelsea Solomon <Chelsea.Solomon@georgetown.org>; Miles Terry <mterry@jacksonshaw.com>; Manika Sharma <Manika.Sharma@westwoodps.com>; Clayton Strolle <Clayton.Strolle@westwoodps.com>
Subject: RE: [EXTERNAL] RE: Jackson Shaw - Dry Berry Creek Interceptor Preliminary Evaluation

Mayra,

Thank you and everyone else on the team for providing the information and insights so that we can get this project aligned with the City's needs and move things forward for the region and for our development.

Below, I am just going to summarize the information provided and our direction so that everyone is on the same page. If I have misunderstood or misinterpreted something, please reply all so that we can all be on the same page

Over the last few months, we have received information that is correlated with the ongoing updates to the Wastewater Master Plan and updates that correspond to Future Land Use. The snippet below shows the general alignment provided that shows the DBC-S1 connecting to BCI-2 on the eastern side before BCI-2 turns south (red line).

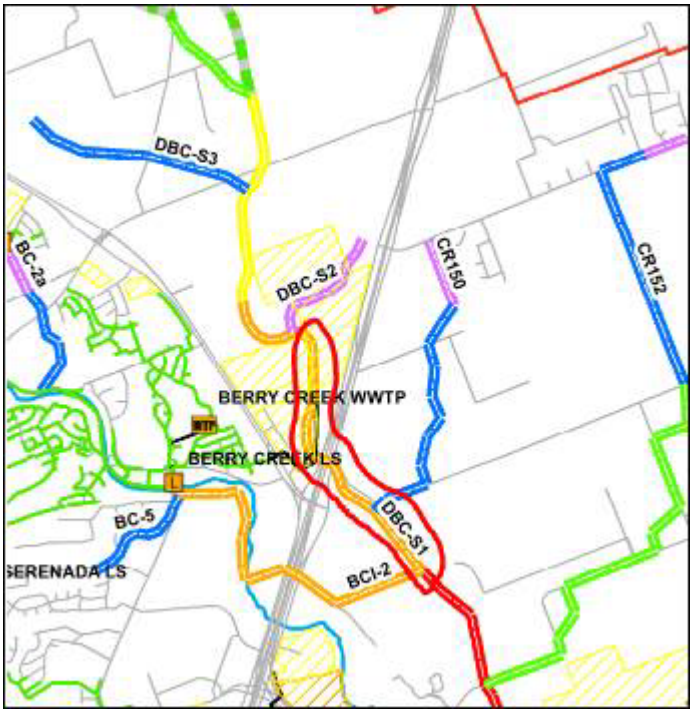

The modeling information also informed us that the line would need to be a 36" pipe with a minimum slope of 0.325% to accommodate anticipated flows from higher density development within this sewershed. The Berry Creek Interceptor plans are being revised by Walker Partners to accommodate these changes such that when DBCI and BCI connect the BCI line will increase in size to accommodate the flows from DBCI.

We will commence our design on this project with this information in mind and will plan to submit our 30% plans to the City for review and feedback. Upon receiving feedback at our 30% mark, we will proceed to finalizing and then submit our 100% plans for City review, feedback, and approval. Once we get kicked off, we will relay our intended design schedule so that the City has a general idea as to when we intend to submit our plans for review. Per direction received, we will submit to Chris Pousson, David Munk, Wes Wright, and Chelsea Solomon.

Once the BCI plans are at a point that they could be shared, that would be greatly beneficial.

As previously mentioned, if anything in this email requires correction, please let us know.

Thanks,

Jacob Valentien
Senior Project Manager
jacob.valentien@westwoodps.com

direct (512) 485-0831
main 512.485.0831
cell (713) 829-6003

Westwood
8701 N. Mopac Expy Suite 320
Austin, TX 78759

westwoodps.com
(888) 937-5150

From: Mayra Cantu <Mayra.Cantu@georgetown.org>
Sent: Thursday, October 13, 2022 8:15 AM
To: Jacob Valentien <Jacob.Valentien@westwoodps.com>; David Herzog <David.Herzog@georgetown.org>
Cc: Chris Pousson <chris.pousson@georgetown.org>; Wesley Wright <Wesley.Wright@georgetown.org>; David Munk <david.munk@georgetown.org>; Chelsea Solomon <Chelsea.Solomon@georgetown.org>
Subject: RE: [EXTERNAL] RE: Jackson Shaw - Dry Berry Creek Interceptor Preliminary Evaluation

Jacob,

Our team really only needs to see to 30% and 100% sets. Please make sure to send them to Chris Pousson, David Munk, Wes Wright, and Chelsea Solomon when that point comes.

Mayra Cantu, MPA
Strategic Support Manager
Systems Engineering
O: 512.930.6740
C: 214.537.7272

City of Georgetown Municipal Complex
300-1 Industrial Ave

Westwood

Attachment 7 – Existing GUS Utilities

Existing Utilities

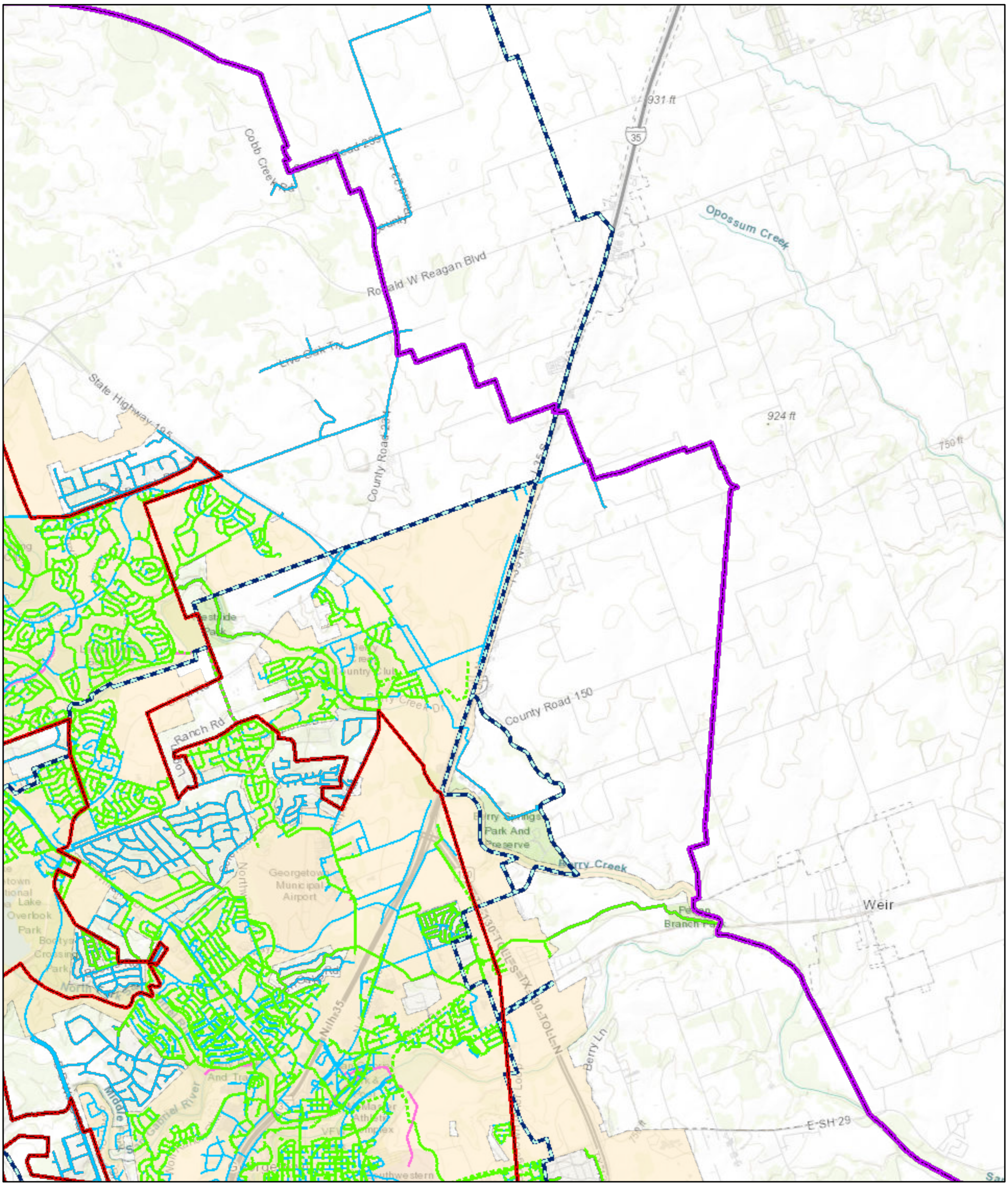

2/15/2022, 7:40:11 PM

1:72,224

0 0.5 1 2 mi

0 1 2 4 km

- City Limits
- Reuse Waterlines
- Water Mains
- Gravity Mains
- Pressurized Mains
- Water Service Areas
- Georgetown Electric CCN
- Extra-Territorial Jurisdiction

County of Williamson, Texas Parks & Wildlife, Esri, HERE, Garmin, GeoTechnologies, Inc., USGS, METI/NASA, NGA, EPA, USDA
Georgetown

Web AppBuilder for ArcGIS

Westwood

Attachment 8 – Construction Plans

CONSTRUCTION PLANS
FOR
DRY BERRY CREEK WASTEWATER INTERCEPTOR
ON BEHALF OF
GEORGETOWN, TEXAS, 78633

OWNER

CITY OF GEORGETOWN
300-1 INDUSTRIAL AVE.
GEORGETOWN, TX 78627
PHONE: (512) 931-7672
CUSTOMERCARE@GEORGETOWN.ORG
GUS.GEORGETOWN.ORG

DEVELOPER

JACKSON SHAW
4890 ALPHA ROAD, SUITE 100
DALLAS, TX 75244
PHONE: (972) 628-7400
MTERRY@JACKSONSHAW.COM
WWW.JACKSONSHAW.COM

ENGINEER

JACOB VALENTIEN, P.E.
8701 N. MOPAC EXPY, SUITE 320
AUSTIN, TX 78759
PHONE: (512) 485-0831
JACOB.VALENTIEN@WESTWOODPS.COM
WWW.WESTWOODPS.COM

LANDSCAPE ARCHITECT

AMBER M. DAVIS, PLA
7557 RAMBLER ROAD, #1400
DALLAS, TEXAS, 75231
PHONE: (972) 235-3031
AMBER.DAVIS@WESTWOODPS.COM
WWW.WESTWOODPS.COM

FLOODPLAIN INFORMATION:
PER FEMA FIRM PARCEL NO: 48491C0285F, DATED 12/19/2019. THE PROPOSED IMPROVEMENTS ARE IN THE AREA OF FLOOD PLAIN ZONE A, AND ARE IN THE 100 YEAR FLOOD PLAIN.

PROPOSED USE:
SANITARY SEWER FOR PUBLIC INFRASTRUCTURE

ACREAGE:
27.53 AC (1,199,277 SF) - LIMITS OF CONSTRUCTION

FIRE DEPARTMENT:
GEORGETOWN FIRE DEPARTMENT
3500 DB WOOD RD.
GEORGETOWN, TX 78626

ELECTRICITY, WATER, WASTEWATER:
GEORGETOWN UTILITY SYSTEMS
300-1 INDUSTRIAL AVENUE
GEORGETOWN, TX 78626
512-930-3555
GUS.GEORGETOWN.ORG

PEDERNALES ELECTRICAL COOPERATIVE, INC
201 S. AVENUE F
JOHNSON CITY, TX 78636
830-868-7155
PEC.COOP

TXDOT
2727 S. AUSTIN AVE.
GEORGETOWN, TX 78626
512-930-5402

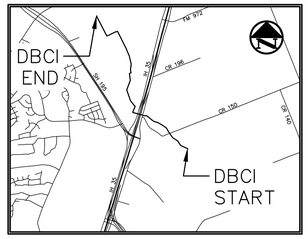

VICINITY MAP
(1: 5,000)

PROJECT ZONING: N/A

PROJECT ADDRESS: 3600, 4100, 4805, AND 5301 NORTH IH-35
GEORGETOWN, TX 78633

220 AND 350 HWY 195
GEORGETOWN, TX 78633

SUBMITTAL DATE: 3/04/2024

NOTES:
1. ALL CONSTRUCTION WITHIN THE STATE RIGHT OF WAY WILL REQUIRE COMPLIANCE TO TXDOT STANDARD SPECIFICATIONS, STANDARD PLANS, TXDOT ON-LINE MANUALS, AND TEXAS MANUAL ON UNIFORM TRAFFIC CONTROL DEVICES.
2. SPECIFICATIONS ADOPTED BY THE TEXAS DEPARTMENT OF TRANSPORTATION, NOVEMBER 1, 2014, AND SPECIFICATION ITEMS LISTED AS FOLLOWS SHALL GOVERN ON THIS PROJECT FOR ALL WORK WITHIN THE STATE RIGHT OF WAY.
3. CONTRACTOR SHALL SCHEDULE A PRE-WORK INSPECTION WITH THE TXDOT INSPECTOR, 512.930.5402, AT LEAST FORTY-EIGHT (48) HOURS PRIOR TO BEGINNING WORK.
4. THIS PROJECT SHALL COMPLY WITH ALL STANDARDS OF THE UNIFIED DEVELOPMENT CODE (UDC), THE CITY OF GEORGETOWN CONSTRUCTION STANDARDS AND SPECIFICATIONS MANUAL, THE DEVELOPMENT MANUAL AND ALL OTHER APPLICABLE CITY STANDARDS.
5. ALL SIGNAGE REQUIRES A SEPARATE APPLICATION AND APPROVAL FROM THE INSPECTION SERVICES DEPARTMENT. NO SIGNAGE IS APPROVED WITH THE SITE CONSTRUCTION PLAN.
6. THE COMPANION LANDSCAPE PLAN HAS BEEN DESIGNED AND PLANT MATERIALS SHALL BE INSTALLED TO MEET ALL REQUIREMENTS OF THE UDC.
7. ALL MAINTENANCE OF REQUIRED LANDSCAPE SHALL COMPLY WITH THE MAINTENANCE STANDARDS OF CHAPTER 8 OF THE UDC.
8. ANY HERITAGE TREE NOTED ON THIS SITE DEVELOPMENT PLAN IS SUBJECT, IN PERPETUITY, TO THE MAINTENANCE, CARE, PRUNING AND REMOVAL REQUIREMENTS OF THE UNIFIED DEVELOPMENT CODE.
9. THE CONSTRUCTION PORTION OF THESE PLANS WERE PREPARED, SEALED, SIGNED AND DATED BY A TEXAS LICENSED PROFESSIONAL ENGINEER. THEREFORE, BASED ON THE ENGINEER'S CONCURRENCE OF COMPLIANCE, THE CONSTRUCTION PLANS FOR CONSTRUCTION OF THE PROPOSED PROJECT ARE HEREBY APPROVED SUBJECT TO THE STANDARD CONSTRUCTION SPECIFICATIONS AND DETAILS MANUAL AND ALL OTHER APPLICABLE CITY, STATE AND FEDERAL REQUIREMENTS AND CODES.
10. THIS PROJECT IS SUBJECT TO ALL CITY STANDARD CONSTRUCTION SPECIFICATIONS AND DETAILS IN EFFECT AT THE TIME OF SUBMITTAL OF THE PROJECT TO THE CITY.
11. THE PROPERTY SUBJECT TO THIS APPLICATION IS SUBJECT TO THE WATER QUALITY REGULATIONS OF THE CITY OF GEORGETOWN
12. A GEOLOGIC ASSESSMENT, IN ACCORDANCE WITH THE CITY OF GEORGETOWN WATER QUALITY REGULATIONS, WAS COMPLETED ON 06/26/2023. ANY SPRINGS AND STREAMS AS IDENTIFIED IN THE GEOLOGIC ASSESSMENT ARE SHOWN HEREIN.

DRAWING SHEET INDEX

SHEET	DESCRIPTION
1	COVER
2	GENERAL NOTES
3	TCEQ NOTES
4	OVERALL PROJECT LAYOUT
5	DRAWING INDEX SHEET 1 OF 2
6	DRAWING INDEX SHEET 2 OF 2
7	EROSION CONTROL SHEET 1 OF 2
8	EROSION CONTROL SHEET 2 OF 2
9	DEMOLITION PLAN
10	PROP WASTEWATER LINE PLAN & PROFILE SHEET 1 OF 17
11	PROP WASTEWATER LINE PLAN & PROFILE SHEET 2 OF 17
12	PROP WASTEWATER LINE PLAN & PROFILE SHEET 3 OF 17
13	PROP WASTEWATER LINE PLAN & PROFILE SHEET 4 OF 17
14	PROP WASTEWATER LINE PLAN & PROFILE SHEET 5 OF 17
15	PROP WASTEWATER LINE PLAN & PROFILE SHEET 6 OF 17
16	PROP WASTEWATER LINE PLAN & PROFILE SHEET 7 OF 17
17	PROP WASTEWATER LINE PLAN & PROFILE SHEET 8 OF 17
18	PROP WASTEWATER LINE PLAN & PROFILE SHEET 9 OF 17
19	PROP WASTEWATER LINE PLAN & PROFILE SHEET 10 OF 17
20	PROP WASTEWATER LINE PLAN & PROFILE SHEET 11 OF 17
21	PROP WASTEWATER LINE PLAN & PROFILE SHEET 12 OF 17
22	PROP WASTEWATER LINE PLAN & PROFILE SHEET 13 OF 17
23	PROP WASTEWATER LINE PLAN & PROFILE SHEET 14 OF 17
24	PROP WASTEWATER LINE PLAN & PROFILE SHEET 15 OF 17
25	PROP WASTEWATER LINE PLAN & PROFILE SHEET 16 OF 17
26	PROP WASTEWATER LINE PLAN & PROFILE SHEET 17 OF 17
27	GENERAL SANITARY SEWER UTILITY DETAILS SHEET 1 OF 6
28	GENERAL SANITARY SEWER UTILITY DETAILS SHEET 2 OF 6
29	GENERAL SANITARY SEWER UTILITY DETAILS SHEET 3 OF 6
30	GENERAL SANITARY SEWER UTILITY DETAILS SHEET 4 OF 6
31	GENERAL SANITARY SEWER UTILITY DETAILS SHEET 5 OF 6
32	GENERAL SANITARY SEWER UTILITY DETAILS SHEET 6 OF 6
33	SANITARY SEWER UTILITY INVERT DETAILS SHEET 1 OF 3
34	SANITARY SEWER UTILITY INVERT DETAILS SHEET 2 OF 3
35	SANITARY SEWER UTILITY INVERT DETAILS SHEET 3 OF 3
36	BARRICADE & CONSTRUCTION GEN NOTES & REQUIREMENTS
37	BARRICADE & CONSTRUCTION PROJECT LIMIT
38	BARRICADE & CONSTRUCTION WORK ZONE SPEED LIMIT
39	BARRICADE & CONSTRUCTION TEMPORARY SIGN NOTES
40	BARRICADE & CONSTRUCTION TYPICAL SIGN SUPPORT
41	BARRICADE & CONSTRUCTION PORTABLE CHANGEABLE MESSAGE SIGN
42	BARRICADE & CONSTRUCTION ARROWS, REFLECTORS, WARN LIGHTS
43	BARRICADE & CONSTRUCTION CHANNELIZING DEVICES 1 OF 3
44	BARRICADE & CONSTRUCTION CHANNELIZING DEVICES 2 OF 3
45	BARRICADE & CONSTRUCTION CHANNELIZING DEVICES 3 OF 3
46	BARRICADE & CONSTRUCTION PAVEMENT MARKINGS
47	BARRICADE & CONSTRUCTION PVMT MARKING PATTERNS
48	TCP LANE CLOSURES 1 OF 3
49	TCP LANE CLOSURES 2 OF 3
50	TCP LANE CLOSURES 3 OF 3
51	TCP TYPICAL DETAILS
52	WORK ZONE SIGNS
53	TYPICAL SIGN REQIUREMENTS
54	L1.00 OVERALL TREE MITIGATION
55	L1.01 OVERALL TREE MITIGATION PLAN
56	L1.02 TREE MITIGATION PLAN
57	L1.03 TREE MITIGATION PLAN
58	L1.04 TREE MITIGATION PLAN
59	L1.05 TREE MITIGATION PLAN
60	L1.06 TREE MITIGATION PLAN
61	L1.07 TREE MITIGATION PLAN
62	L1.08 TREE MITIGATION PLAN
63	L1.09 TREE MITIGATION PLAN
64	L1.10 TREE DATA
65	L 1.11 TREE DATA
66	L1.12 TREE DATA

REVISIONS/CORRECTIONS

NO.	DESCRIPTION	REVISE (R) ADD (A) VOID (V) SHEET NO.S	TOTAL # SHEETS IN PLAN SET	NET CHANGE TO IMP. COVER (sq. ft.)	TOTAL SITE IMP. COVER (sq. ft.) (%)	CITY OF GEORGETOWN APPROVAL/DATE	DATE IMAGED

SURVEY CONTROL AND BENCHMARKS

POINT NO.	GRID NORTHING	GRID EASTING	ELEV	DESCRIPTION
111	10229613.37'	3139638.74'	695.48'	MAG/S - BM
115	10229847.70'	3139130.44'	706.32'	MAG/S - BM
120	10230261.07'	3139299.90'	694.76'	CIRS "WWPS" - BM
121	10230700.08'	3138908.76'	694.08'	CIRS "WWPS" - BM
122	10231506.14'	3138720.64'	696.50'	CIRS "WWPS" - BM
123	10232495.88'	3139042.01'	692.42'	CIRS "WWPS" - BM
124	10232534.27'	3139197.07'	696.48'	CIRS "WWPS" - BM
125	10233271.63'	3139308.28'	706.52'	CIRS "WWPS" - BM
126	10233868.47'	3139188.81'	712.42'	CIRS "WWPS" - BM
127	10234445.32'	3138961.35'	718.91'	CIRS "WWPS" - BM
128	10235616.19'	3138561.32'	711.13'	CIRS "WWPS" - BM
129	10235411.13'	3137753.13'	707.62'	CIRS "WWPS" - BM
140	10229501.20'	3140008.42'	685.76'	CIRS "WWPS" - BM
141	10228928.72'	3140847.59'	680.47'	CIRS "WWPS" - BM
142	10228166.46'	3141461.45'	678.41'	CIRS "WWPS" - BM
143	10227269.68'	3142095.88'	678.13'	CIRS "WWPS" - BM

DESCRIPTION DEFINITIONS:

MAG/S - BM = CHRISNIK MAGNAIL SET FOR BENCHMARK

CIRS "WWPS" - BM = CAPPED IRON ROD SET STAMPED, "WESTWOOD PROFESSIONAL SERVICES" FOR BENCHMARK

PREPARED BY

Westwood

Phone (512) 485-0831 8701 N. Mopac Expy, Suite 320
Toll Free (888) 937-5150 Austin, TX 78759
westwoodps.com

Westwood Professional Services, Inc.
TBPE FIRM REGISTRATION NO. F-11756
TBPLS FIRM REGISTRATION NO. LS-10074301

Westwood
Phone (512) 485-0831 8701 N. Mopac Expy, Suite 320
Toll Free (888) 937-5150 Austin, TX 78759
westwoodps.com
Westwood Professional Services, Inc.
TBPE FIRM REGISTRATION NO. F-11756
TBPLS FIRM REGISTRATION NO. LS-10074301

REVISIONS

NO.	DATE	DESCRIPTION	BY

DBC WASTEWATER INTERCEPTOR
CIVIL INFRASTRUCTURE
GEORGETOWN, TEXAS, 78633

COVER

STATE OF TEXAS
JACOB W. VALENTIEN
124993
LICENSED
PROFESSIONAL ENGINEER

THE SEAL APPEARING ON THIS DOCUMENT WAS AUTHORIZED BY SUPERVISION OF JACOB W. VALENTIEN, P.E. 124993 ON 3/1/2024. ALTERATION OF A SEALED DOCUMENT WITHOUT PROPER NOTIFICATION TO THE RESPONSIBLE ENGINEER IS AN OFFENSE UNDER THE TEXAS ENGINEERING PRACTICE ACT.

DESIGN	DRAWN	DATE
JWV	SAG	MAR 2024

SHEET NO.
1

TGLASPER
3/1/2024 10:52 AM
M:\DWG-46\4670-22.676\DWG\CIVIL C3D 2018\02_SHEETS\COVER\4670-22.676_COVR.DWG

GENERAL NOTES

1. ALL WORK, UNLESS OTHERWISE NOTED, SHALL CONFORM TO TEXAS DEPARTMENT OF TRANSPORTATION STANDARD CONSTRUCTION SPECIFICATIONS OR THE STANDARD SPECIFICATIONS FOR PUBLIC WORKS CONSTRUCTION ISSUED BY THE CITY OF GEORGETOWN STANDARD CONSTRUCTION SPECIFICATIONS.
2. PRIOR TO ANY CONSTRUCTION, THE CONTRACTOR SHALL BE FAMILIAR WITH THE PLANS, ALL NOTES, THE STANDARD SPECIFICATIONS FOR PUBLIC WORKS CONSTRUCTION ISSUED BY THE NORTH CENTRAL TEXAS COUNCIL OF GOVERNMENTS, THE CITY STANDARDS FOR CONSTRUCTION, AND ANY OTHER APPLICABLE STANDARDS AND SPECIFICATIONS RELEVANT TO THE PROPER COMPLETION OF THE WORK SPECIFIED. FAILURE ON THE PART OF THE CONTRACTOR TO BE FAMILIAR WITH ALL STANDARDS AND SPECIFICATIONS PERTAINING TO THIS WORK SHALL IN NO WAY RELIEVE THE CONTRACTOR OF RESPONSIBILITY OF PERFORMING THE WORK IN ACCORDANCE WITH ALL SUCH APPLICABLE STANDARDS AND SPECIFICATIONS.
3. THE HORIZONTAL AND VERTICAL LOCATIONS OF EXISTING SUBSURFACE UTILITIES HAVE BEEN DETERMINED FROM DATA RECORDED BY OTHERS. CONTRACTOR SHALL VERIFY ELEVATIONS SHOWN AND ENSURE THAT NECESSARY CROSSING CLEARANCES BETWEEN EXISTING AND PROPOSED UTILITIES EXIST PRIOR TO CONSTRUCTION OF ANY SUCH CROSSINGS. IT WILL BE THE RESPONSIBILITY OF THE CONTRACTOR TO PROTECT ALL UTILITIES IN THE CONSTRUCTION OF THIS PROJECT. CONTRACTOR TO VERIFY SIZE AND LOCATION OF ALL UTILITIES PRIOR TO CONSTRUCTION AND NOTIFY ENGINEER OF ANY DISCREPANCIES.
4. IT WILL BE THE RESPONSIBILITY OF THE CONTRACTOR TO PROTECT ALL MANHOLES, CLEANOUTS, VALVE BOXES, AND FIRE HYDRANTS, ETC. CONTRACTOR TO ADJUST TO PROPER LINE AND GRADE PRIOR TO AND AFTER THE PLACING OF PERMANENT PAVING AND GRADING. UTILITIES MUST BE MAINTAINED TO PROPER LINE AND GRADE DURING THE CONSTRUCTION OF THE PAVING FOR THIS DEVELOPMENT.
5.
   - 5.1. PROTECT AND MAINTAIN ROADWAY TRAFFIC THROUGHOUT THE PROJECT, PROVIDING A MINIMUM OF ONE (1) LANE OPEN IN EACH DIRECTION;
   - 5.2. PROVIDE AND MAINTAIN INTERIM ACCESS FROM ROADWAYS CURRENTLY IN USE TO ALL DRIVEWAYS AND INTERSECTING STREETS OR ALLEYS;
   - 5.3. MAINTAIN NORMAL PROJECT DRAINAGE UNTIL NEW DRAINAGE FACILITIES ARE FUNCTIONAL, INCLUDING, WHERE NECESSARY, INTERIM REPLACEMENT OF EXISTING DRAINAGE STRUCTURES REMOVED FOR CONSTRUCTION OF NEW DRAINAGE FACILITIES;
   - 5.4. MAINTAIN ALL WORK AND MATERIAL STORAGE AREAS IN ORDERLY CONDITION, FREE OF DEBRIS AND WASTE. ON COMPLETION OF CONSTRUCTION, CLEAN UP THE PROJECT AND ADJACENT AFFECTED AREAS TO ACCEPTABLE CONDITION, ALL AS PROVIDED IN THE GENERAL CONDITIONS.
6. PRIOR TO COMMENCEMENT OF CONSTRUCTION, BONDS AND THREE-WAY CONTRACTS SHALL BE SUBMITTED TO THE CITY AS REQUIRED.
7. THE CONTRACTOR IS RESPONSIBLE FOR COMPLIANCE WITH ALL FEDERAL, STATE, AND LOCAL REGULATIONS REGARDING TRENCH SAFETY.
8. BARRICADING AND PROJECT SIGNS SHALL CONFORM TO TEXAS DEPARTMENT OF TRANSPORTATION MANUAL ON UNIFORM TRAFFIC CONTROL DEVICES AND LATEST UPDATES.
9. EXACT SAWCUT PAVEMENT REMOVAL AND REPLACEMENT LIMITS WITHIN THE PUBLIC RIGHT-OF-WAY IS TO BE IN ACCORDANCE WITH THE CITY PAVEMENT REPAIR MANUAL AND INCLUDED IN THE BASE BID.
10. THESE PLANS WERE PREPARED, SEALED, SIGNED AND DATED BY A TEXAS LICENSED PROFESSIONAL ENGINEER. THEREFORE, BASED ON THE ENGINEER'S CONCURRENCE OF COMPLIANCE, THE PLANS FOR CONSTRUCTION OF THE PROPOSED PROJECT ARE HEREBY APPROVED SUBJECT TO THE STANDARD CONSTRUCTION SPECIFICATIONS AND DETAILS MANUAL AND ALL OTHER APPLICABLE CITY, STATE, AND FEDERAL REQUIREMENTS AND CODES.
11. THIS PROJECT IS SUBJECT TO ALL CITY STANDARD SPECIFICATIONS AND DETAILS IN EFFECT AT THE TIME OF SUBMITTAL OF THE PROJECT TO THE CITY,
12. THE SITE CONSTRUCTION PLANS SHALL MEET ALL REQUIREMENTS OF THE APPROVED SITE PLAN.
13. WASTEWATER MAINS SHALL BE INSTALLED WITHOUT HORIZONTAL OR VERTICAL BENDS.
14. ALL ELECTRIC AND COMMUNICATION INFRASTRUCTURE MUST FOLLOW ALL PORTIONS OF UDC 13.06.
15. THE PROPERTY SUBJECTED TO THIS APPLICATION IS SUBJECT TO THE WATER QUALITY REGULATIONS OF THE CITY OF GEORGETOWN.
16. A GEOLOGIC ASSESSMENT, IN ACCORDANCE WITH THE CITY OF GEORGETOWN WATER QUALITY REGULATIONS, WAS COMPLETED. ANY SPRINGS AND STREAMS AS IDENTIFIED IN THE GEOLOGIC ASSESSMENT ARE SHOWN HEREIN.

DEMOLITION GENERAL NOTES

1. CONTRACTOR IS TO REVIEW ALL GENERAL NOTES PRIOR TO BEGINNING WORK.
2. REMOVE ALL EXISTING PAVEMENT AND STRUCTURES WITHIN THE LIMITS OF DEMOLITION UNLESS OTHERWISE NOTED.
3. SAWCUT AND REMOVE ALL EXISTING DRIVE APPROACHES (WITHIN THE LIMITS OF DEMOLITION) TWO FEET FROM BACK OF CURB. SIDEWALKS, PAVEMENT, AND UTILITIES WITHIN THE PUBLIC RIGHT-OF-WAY ARE TO REMAIN UNLESS OTHERWISE NOTED.
4. COORDINATE WITH LOCAL POWER, TELEPHONE, CABLE, AND GAS COMPANIES PRIOR TO THE REMOVAL AND/OR RELOCATION OF EXISTING UTILITIES.
5. ALL UTILITIES SHOULD BE CUT AND PLUGGED IN ACCORDANCE WITH THEIR RESPECTIVE UTILITY COMPANY REQUIREMENTS AND PRIOR TO DEMOLITION OF THE EXISTING BUILDINGS.
6. CONTRACTOR TO PLUG ALL EXISTING EXPOSED ENDS OF ABANDONED UTILITIES.
7. CONTRACTOR TO DETERMINE SOURCE OF ALL EXPOSED UTILITIES AND, IF REQUIRED, RECONNECT TO PROPOSED UTILITIES.
8. CONTRACTOR IS RESPONSIBLE FOR THE REMOVAL AND LEGAL DISPOSAL OF ALL THE UNSUITABLE MATERIALS FROM THE PROJECT SITE. CONTRACTOR SHALL CONTACT ALL LOCAL AUTHORITIES TO DETERMINE DISPOSAL REQUIREMENTS.
9. ALL TREES ON THE PROPERTY SHALL BE PROTECTED AGAINST DAMAGE DURING DEMOLITION OPERATIONS UNLESS OTHERWISE NOTED. THE TREE PROTECTION SHALL BE PLACED AROUND TREES PRIOR TO ANY DEMOLITION OR GRADING. TREE PROTECTION SHALL REMAIN UNTIL ALL WORK IS COMPLETED. REFER TO LANDSCAPE PLANS FOR TREE REMOVAL AND PROTECTION DETAILS.
10. ANY DAMAGE DONE TO EXISTING TREE CROWNS OR ROOT SYSTEMS SHALL BE REPAIRED IMMEDIATELY BY AN APPROVED TREE SURGEON AT THE OWNER'S DIRECTION. ROOTS EXPOSED AND/OR DAMAGED DURING DEMOLITION AND/OR GRADING OPERATIONS SHALL BE CUT OFF CLEANLY INSIDE THE EXPOSED OR DAMAGED AREA, CUT SURFACES PAINTED WITH AN APPROVED TREE PAINT, AND TOPSOIL AND MULCH PLACED OVER THE EXPOSED ROOT AREA IMMEDIATELY.
11. CONTRACTOR IS RESPONSIBLE FOR ESTABLISHING AND MAINTAINING EROSION CONTROL MEASURES ON THE SITE IN ACCORDANCE WITH FEDERAL, STATE, AND LOCAL REGULATIONS UNTIL THE SITE HAS BEEN STABILIZED.
12. CONTRACTOR IS RESPONSIBLE FOR GRADING ALL DISTURBED AREAS TO ALLOW FOR POSITIVE DRAINAGE. GRADING SLOPES ARE NOT TO EXCEED 3:1.
13. AREAS EXCAVATED FOR FOUNDATION OR UNDERGROUND STRUCTURE REMOVAL SHALL BE BACK-FILLED AND COMPACTED TO A MINIMUM OF 95% STANDARD PROCTOR DENSITY.
14. CONTRACTOR IS RESPONSIBLE FOR SECURITY OF THE SITE DURING DEMOLITION ACTIVITIES AND UNTIL SUBSTANTIAL COMPLETION.
15. ALL WORK, UNLESS OTHERWISE NOTED, SHALL CONFORM TO THE STANDARD SPECIFICATIONS FOR PUBLIC WORKS CONSTRUCTION ISSUED BY THE NORTH CENTRAL TEXAS COUNCIL OF GOVERNMENTS AND CITY STANDARD CONSTRUCTION SPECIFICATIONS.
16. THE HORIZONTAL AND VERTICAL LOCATIONS OF EXISTING SUBSURFACE UTILITIES HAVE BEEN DETERMINED FROM DATA RECORDED BY OTHERS. IT WILL BE THE RESPONSIBILITY OF THE CONTRACTOR TO PROTECT ALL UTILITY MAINS, MANHOLES, CLEANOUTS, VALVE BOXES, AND FIRE HYDRANTS, ETC. IN THE AREA OF DEMOLITION.
17. THE CONTRACTOR IS RESPONSIBLE FOR COMPLIANCE WITH ALL FEDERAL, STATE, AND LOCAL REGULATIONS REGARDING TRENCH SAFETY.
18. BARRICADING AND PROJECT SIGNS SHALL CONFORM TO TEXAS DEPARTMENT OF TRANSPORTATION MANUAL ON UNIFORM TRAFFIC CONTROL DEVICES AND LATEST UPDATES.
19. CONTRACTOR SHALL MAINTAIN EXISTING PAVEMENT AND ACCESS TO FIRE HYDRANTS ON SITE UNTIL THE BUILDINGS AND STRUCTURES IN THAT AREA HAVE BEEN DEMOLISHED AND REMOVED.
20. CONTRACTOR WILL PROVIDE ON-SITE PARKING FOR WORKERS. VEHICLE PARKING WILL NOT BE ALLOWED WITHIN THE PUBLIC RIGHT-OF-WAY.
21. CONTRACTOR WILL BE RESPONSIBLE FOR IMPLEMENTING AND MAINTAINING ADEQUATE DUST CONTROL MEASURES DURING DEMOLITION ACTIVITIES.
22. CONTRACTOR IS TO COORDINATE DEMOLITION ACTIVITIES WITH THE HAZARDOUS MATERIAL ABATEMENT CONTRACTORS' ACTIVITIES, IF APPLICABLE.
23. THE CONTRACTOR WILL BE RESPONSIBLE FOR OBTAINING ALL TEMPORARY UTILITY SERVICES REQUIRED TO COMPLETE THE SCOPE OF WORK.

GRADING GENERAL NOTES

1. REFER TO GEOTECHNICAL REPORT FOR REQUIREMENTS REGARDING FILL COMPACTION AND MOISTURE CONTENT.
2. UNLESS NOTED, ALL FILL IS TO BE COMPACTED TO A MINIMUM OF 95% STANDARD PROCTOR DENSITY WITHIN 3% OF OPTIMUM MOISTURE CONTENT. FILL TO BE PLACED IN MAXIMUM LIFTS PER THE GEOTECHNICAL REPORT.
3. REFER TO LANDSCAPE SPECIFICATIONS FOR SEEDING AND SODDING REQUIREMENTS.
4. ANY CONCRETE, ROCK, OR MATERIAL DEEMED BY THE ENGINEER TO BE UNSUITABLE FOR SUBGRADE SHALL BE DISPOSED OF OFFSITE AT CONTRACTOR'S EXPENSE.
5. TRENCH BACKFILL MATERIAL SHALL CONFORM TO THE REQUIREMENTS OF THE CITY OF GEORGETOWN CONSTRUCTION MANUAL SECTION G4 AND THE GEOTECHNICAL REPORT AND SHALL BE MECHANICALLY COMPACTED PER THE GEOTECHNICAL REPORT TO THE TOP OF SUBGRADE TO A MINIMUM OF 95% STANDARD PROCTOR DENSITY IN ACCORDANCE WITH THE CITY OF GEORGETOWN CONSTRUCTION MANUAL SECTION G4 AND THE GEOTECHNICAL REPORT UNLESS OTHERWISE SHOWN ON THESE PLANS OR STATED IN THE STANDARD CITY SPECIFICATIONS.
6. A ROUND MANHOLE COVER MEETING CITY SPECIFICATIONS SHALL BE PLACED IN ALL INLET TOPS NEAR THE OUTLET PIPE.
7. CRUSHED STONE BEDDING OR APPROVED EQUAL SHALL BE PROVIDED BY THE CONTRACTOR WHEN ROCK IS ENCOUNTERED IN TRENCHES. THERE SHALL BE NO ADDITIONAL PAY ITEM FOR CRUSHED STONE BEDDING.
8. IF REQUIRED DUE TO CONSTRUCTION, POWER POLES TO BE BRACED OR RELOCATED AT CONTRACTOR'S EXPENSE.

SANITARY SEWER GENERAL NOTES

1. ALL CONCRETE SHALL BE CLASS "A" (3000 PSI), UNLESS OTHERWISE NOTED.
2. SANITARY SEWER PIPE SHALL BE PVC.
3. WHEN WATER AND SANITARY SEWER MAINS, SERVICES, AND LATERALS ARE INSTALLED, THEY SHALL BE INSTALLED NO CLOSER TO EACH OTHER THAN NINE FEET IN ALL DIRECTIONS AND PARALLEL LINES MUST BE INSTALLED IN SEPARATE TRENCHES. WHERE THE NINE FOOT SEPARATION DISTANCE CANNOT BE ACHIEVED, THE FOLLOWING TCEQ CHAPTERS SHALL APPLY:
   - 3.A. TCEQ CHAPTER 217.53 PIPE DESIGN, SECTION (d) SEPARATION DISTANCES.
   - 3.B. TCEQ CHAPTER 290.44 WATER DISTRIBUTION, SECTION (e) LOCATION OF WATERLINES.
4. CONTRACTOR TO VERIFY ALL EXISTING SEWER FLOW LINES BEFORE BEGINNING CONSTRUCTION.
5. CONTRACTOR SHALL TIE A ONE INCH WIDE PIECE OF RED PLASTIC FLAGGING TO THE END OF SEWER SERVICE AND SHALL LEAVE A MINIMUM OF 36 INCHES OF FLAGGING EXPOSED AFTER BACKFILL. AFTER CURB AND PAVING IS COMPLETED, CONTRACTOR SHALL MARK THE LOCATION OF THE SEWER SERVICE ON THE CURB OR ALLEY IN ACCORDANCE WITH THE STANDARD CITY SPECIFICATIONS.
6. TRENCH BACKFILL MATERIAL SHALL CONFORM TO THE REQUIREMENTS OF THE CITY OF GEORGETOWN AND THE GEOTECHNICAL REPORT AND SHALL BE MECHANICALLY COMPACTED PER THE GEOTECHNICAL REPORT TO THE TOP OF SUBGRADE TO A MINIMUM OF 95% STANDARD PROCTOR DENSITY IN ACCORDANCE WITH CITY OF GEORGETOWN AND THE GEOTECHNICAL REPORT UNLESS OTHERWISE SHOWN ON THESE PLANS OR STATED IN THE STANDARD CITY SPECIFICATIONS.
7. EMBEDMENT SHALL CONFORM TO THE REQUIREMENTS OF THE CITY OF GEORGETOWN AND THE GEOTECHNICAL REPORT UNLESS OTHERWISE SHOWN ON THESE PLANS OR STATED IN THE STANDARD CITY SPECIFICATIONS.
8. CONTRACTOR SHALL RECONNECT ALL EXISTING SERVICES AND MAINTAIN EXISTING SERVICES THROUGHOUT CONSTRUCTION.
9. IF REQUIRED DUE TO CONSTRUCTION, POWER POLES TO BE BRACED OR RELOCATED AT CONTRACTOR'S EXPENSE.

CITY OF GEORGETOWN GENERAL NOTES

1. THESE CONSTRUCTION PLANS WERE PREPARED, SEALED, SIGNED, AND DATED BY A TEXAS LICENSED PROFESSIONAL ENGINEER. THEREFORE BASED ON THE ENGINEER'S CONCURRAENCE OF COMPLIANCE, THE CONSTRUCTION PLANS FOR CONSTRUCTION OF THE PROPOSED PROJECT ARE HEREBY APPROVED SUBJECT TO THE STANDARD CONSTRUCTION SPECIFICATIONS AND DETAILS MANUAL AND ALL OTHER APPLICABLE CITY, STATE, AND FEDERAL REQUIREMENTS AND CODES.
2. THIS PROJECT IS SUBJECT TO ALL CITY STANDARD SPECIFICATIONS AND DETAILS IN EFFECT AT THE TIME OF SUBMITTAL OF THE PROJECT TO THE CITY.
3. THE SITE CONSTRUCTION PLANS SHALL MEET ALL REQUIREMENTS OF THE APPROVED SITE PLAN.
4. WASTEWATER MAINS SHALL BE INSTALLED WITHOUT HORIZONTAL OR VERTICAL BENDS.
5. MAXIMUM DISTANCE BETWEEN WASTEWATER MANHOLES IS 1000 FEET.
6. WASTEWATER MAINS SHALL BE LOW PRESSURE AIR TESTED AND MANDREL TESTED BY THE CONTRACTOR ACCORDING TO CITY OF GEORGETOWN AND TCEQ REQUIREMENT.
7. WASTEWATER MANHOLES SHALL BE VACUUM TESTED AND COATED BY THE CONTRACTOR ACCORDING TO CITY OF GEORGETOWN AND TCEQ REQUIREMENTS.
8. WASTEWATER MAINS SHALL BE CAMERA TESTED BY THE CONTRACTOR AND SUBMITTED TO THE CITY ON DVD FORMAT PRIOR TO PAVING THE STREETS.
9. PRIVATE WATER SYSTEM FIRE LINES SHALL BE TESTED BY THE CONTRACTOR TO 200 PSI FOR 2 HOURS.
10. WATER AND SEWER MAIN CROSSINGS SHALL MEET ALL REQUIREMENTS OF THE TCEQ AND THE CITY.
11. FLEXIBLE BASE MATERIAL FOR PUBLIC STREETS SHALL BE TXDOT TYPE A GRADE 1.
12. HOT MIX ASPHALTIC CONCRETE PAVEMENT SHALL BE TYPE D UNLESS OTHERWISE SPECIFIED AND SHALL BE A MINIMUM OF 2 INCHES THICK ON PUBLIC STREETS AND ROADWAYS.
13. ALL SIDEWALK RAMPS ARE TO BE INSTALLED WITH THE PUBLIC INFRASTRUCTURE.
14. A MAINTENANCE BOND IS REQUIRED TO BE SUBMITTED TO THE CITY PRIOR TO ACCEPTANCE OF THE PUBLIC IMPROVEMENTS. THIS BOND SHALL BE ESTABLISHED FOR 2 YEARS IN THE AMOUNT OF 10% OF THE COST OF THE PUBLIC IMPROVEMENTS AND SHALL FOLLOW THE CITY FORMAT.
15. RECORD DRAWINGS OF PUBLIC IMPROVEMENTS SHALL BE SUBMITTED TO THE CITY BY THE DESIGN ENGINEER PRIOR TO ACCEPTANCE OF THE PROJECT. THESE DRAWINGS SHALL BE ON MYLAR OR ON TIFF OR PDF DISK (300DPI). IF A DISK IS SUBMITTED, A BOND SET SHALL BE INCLUDED WITH THE DISK.

TRENCHLESS CONSTRUCTION NOTES

1. SEGMENTS THAT CROSS BENEATH IH-35 AND DRY BERRY CREEK MUST BE INSTALLED BY TRENCHLESS METHODS UTILIZING A TWO-PASS SYSTEM UTILIZING OVERSIZED STEEL CASING WITH A MINIMUM THICKNESS OF 0.5 INCHES WITHIN WHICH THE HOBAS CARRIER PIPE IS INSTALLED. THE STEEL CASING MAY BE INSTALLED BY EITHER TUNNEL BORING MACHINE PER SPEC SECTION 33 30 02, MICROTUNNEL BORING MACHINE PER SPEC SECTION 33 30 03, OR HAND TUNNELING PER SPEC SECTION 33 30 04.
2. PER THE ABOVE-MENTIONED SPECIFICATIONS, THE CONTRACTOR IS RESPONSIBLE FOR THE FINAL STRUCTURAL DESIGN OF THE STEEL CASING TO ACCOMMODATE ALL CONSTRUCTION LOADING INCLUDING, BUT NOT LIMITED TO, GROUND LOADING, HYDROSTATIC PRESSURE, JACKING LOADS, HANDLING LOADS, AND SURCHARGE LOADS.
3. BORE AND RECEIVING PIT DIMENSIONS SHOWN ARE APPROXIMATE. CONTRACTOR IS RESPONSIBLE FOR THEIR EXACT LOCATIONS AND FOR SELECTING DIMENSIONS TO FACILITATE UTILIZATION OF THEIR MEANS AND METHODS WITHIN THE AVAILABLE EASEMENT SHOWN WITHOUT CONFLICTING WITH OR IMPACTING UTILITIES.
4. THE CONTRACTOR IS RESPONSIBLE FOR THE DESIGN OF THE BORE PIT SUPPORT OF EXCAVATION SYSTEM PER SPECIFICATION SECTION 33 73 15 – SHAFTS.
5. THE CONTRACTOR SHALL PROVIDE PUMP OR DEWATERING SYSTEM TO CONTROL GROUNDWATER ENTERING THE BORE AND RECEIVING PITS IN ACCORDANCE WITH SPECIFICATION SECTION 33 73 80 – GROUNDWATER CONTROL FOR SHAFTS AND TUNNELS.

SPECIAL PUBLIC SANITARY UTILITY SEWERAGE SYSTEM NOTES

1. SANITARY SEWER PIPE, UNLESS OTHERWISE SPECIFIED ON THE PLANS, SHALL BE PER TABLE BELOW USING BEDDING, EMBEDMENT, AND BACKFILL PER THE TECHNICAL SPECIFICATIONS AND DETAILS SHOWN HEREIN.

DIAMETER	MATERIAL	SPECIFICATIONS
8"	PVC SDR26	ASTM D3034 – PS 115
12"	PVC SDR26	ASTM D3034 – PS 115
36"	CCFRPM	ASTM D3262 – SN 72

2. AN "S" SHALL BE STAMPED ON THE FACE OF CURB AT THE LOCATION OF EACH SANITARY SEWER SERVICE.
3. ALL SANITARY SEWER ADAPTERS REQUIRED TO CONNECT TO EXISTING SANITARY SEWERS ARE INCIDENTAL TO THE BID ITEM FOR SANITARY SEWER PIPE.
4. ALL STREET AND ROADWAY BORES TO BE AS SPECIFIED IN THE TRENCHLESS CONSTRUCTION NOTES.

Westwood
Phone (512) 485-0831 8701 N. Mopac Expy, Suite 320
Toll Free (888) 937-5150 Austin, TX 78759
westwoodps.com
Westwood Professional Services, Inc.
TBPE FIRM REGISTRATION NO. F-11756
TBPLS FIRM REGISTRATION NO. LS-10074301

REVISIONS

NO.	DATE	DESCRIPTION	BY

DBC WASTEWATER INTERCEPTOR
CIVIL INFRASTRUCTURE
GEORGETOWN, TEXAS, 78633

GENERAL NOTES

STATE OF TEXAS
JACOB W. VALENTIEN
124993
LICENSED
PROFESSIONAL ENGINEER

THE SEAL APPEARING ON THIS DOCUMENT WAS AUTHORIZED BY SUPERVISOR OF JACOB W. VALENTIEN, P.E. 124993 ON 3/1/2024. ALTERATION OF A SEALED DOCUMENT WITHOUT PROPER NOTIFICATION TO THE RESPONSIBLE ENGINEER IS AN OFFENSE UNDER THE TEXAS ENGINEERING PRACTICE ACT.

DESIGN	DRAWN	DATE
JWV	SAG	MAR 2024

SHEET NO.
2

TGLASPER
3/1/2024 10:52 AM
M:\DWG-46\4670-22.676\DWG\CIVIL C3D 2018\02_SHEETS\COVR\4670-22.676_COVR.DWG

TEXAS COMMISSION ON ENVIRONMENTAL QUALITY
ORGANIZED SEWAGE COLLECTION SYSTEM
GENERAL CONSTRUCTION NOTES

1. THIS ORGANIZED SEWAGE COLLECTION SYSTEM (SCS) MUST BE CONSTRUCTED IN ACCORDANCE WITH 30 TEXAS ADMINISTRATIVE CODE (TAC) §213.5(C), THE TEXAS COMMISSION ON ENVIRONMENTAL QUALITY'S (TCEQ) EDWARDS AQUIFER RULES AND ANY LOCAL GOVERNMENT STANDARD SPECIFICATIONS.
2. ALL CONTRACTORS CONDUCTING REGULATED ACTIVITIES ASSOCIATED WITH THIS PROPOSED REGULATED PROJECT
MUST BE PROVIDED WITH COPIES OF THE SCS PLAN AND THE TCEQ LETTER INDICATING THE SPECIFIC CONDITIONS OF ITS APPROVAL. DURING THE COURSE OF THESE REGULATED ACTIVITIES, THE CONTRACTORS MUST BE REQUIRED TO KEEP ON-SITE COPIES OF THE PLAN AND THE APPROVAL LETTER.
3. A WRITTEN NOTICE OF CONSTRUCTION MUST BE SUBMITTED TO THE PRESIDING TCEQ REGIONAL OFFICE AT LEAST 48 HOURS PRIOR TO THE START OF ANY REGULATED ACTIVITIES. THIS NOTICE MUST INCLUDE:
- THE NAME OF THE APPROVED PROJECT;
- THE ACTIVITY START DATE; AND
- THE CONTACT INFORMATION OF THE PRIME CONTRACTOR.
4. ANY MODIFICATION TO THE ACTIVITIES DESCRIBED IN THE REFERENCED SCS APPLICATION FOLLOWING THE DATE OF APPROVAL MAY REQUIRE THE SUBMITTAL OF AN SCS APPLICATION TO MODIFY THIS APPROVAL, INCLUDING THE PAYMENT OF APPROPRIATE FEES AND ALL INFORMATION NECESSARY FOR ITS REVIEW AND APPROVAL.
5. PRIOR TO BEGINNING ANY CONSTRUCTION ACTIVITY, ALL TEMPORARY EROSION AND SEDIMENTATION (E&S) CONTROL MEASURES MUST BE PROPERLY INSTALLED AND MAINTAINED IN ACCORDANCE WITH THE MANUFACTURERS SPECIFICATIONS. THESE CONTROLS MUST REMAIN IN PLACE UNTIL THE DISTURBED AREAS HAVE BEEN PERMANENTLY STABILIZED.
6. IF ANY SENSITIVE FEATURES ARE DISCOVERED DURING THE WASTEWATER LINE TRENCHING ACTIVITIES, ALL REGULATED ACTIVITIES NEAR THE SENSITIVE FEATURE MUST BE SUSPENDED IMMEDIATELY. THE APPLICANT MUST IMMEDIATELY NOTIFY THE APPROPRIATE REGIONAL OFFICE OF THE TCEQ OF THE FEATURE DISCOVERED. A GEOLOGIST'S ASSESSMENT OF THE LOCATION AND EXTENT OF THE FEATURE DISCOVERED MUST BE REPORTED TO THAT REGIONAL OFFICE IN WRITING AND THE APPLICANT MUST SUBMIT A PLAN FOR ENSURING THE STRUCTURAL INTEGRITY OF THE SEWER LINE OR FOR MODIFYING THE PROPOSED COLLECTION SYSTEM ALIGNMENT AROUND THE FEATURE. THE REGULATED ACTIVITIES NEAR THE SENSITIVE FEATURE MAY NOT PROCEED UNTIL THE
TCEQ-0596 (REV. JULY 15, 2015) PAGE 2 OF 6
EXECUTIVE DIRECTOR HAS REVIEWED AND APPROVED THE METHODS PROPOSED TO PROTECT THE SENSITIVE FEATURE AND THE EDWARDS AQUIFER FROM ANY POTENTIALLY ADVERSE IMPACTS TO WATER QUALITY WHILE MAINTAINING THE STRUCTURAL INTEGRITY OF THE LINE.
7. SEWER LINES LOCATED WITHIN OR CROSSING THE 5-YEAR FLOODPLAIN OF A DRAINAGE WAY WILL BE PROTECTED
FROM INUNDATION AND STREAM VELOCITIES WHICH COULD CAUSE EROSION AND SCOURING OF BACKFILL. THE TRENCH MUST BE CAPPED WITH CONCRETE TO PREVENT SCOURING OF BACKFILL, OR THE SEWER LINES MUST BE ENCASED IN CONCRETE. ALL CONCRETE SHALL HAVE A MINIMUM THICKNESS OF 6 INCHES.
8. BLASTING PROCEDURES FOR PROTECTION OF EXISTING SEWER LINES AND OTHER UTILITIES WILL BE IN ACCORDANCE WITH THE NATIONAL FIRE PROTECTION ASSOCIATION CRITERIA. SAND IS NOT ALLOWED AS BEDDING OR BACKFILL IN TRENCHES THAT HAVE BEEN BLASTED. IF ANY EXISTING SEWER LINES ARE DAMAGED, THE LINES MUST BE REPAIRED AND RETESTED.
9. ALL MANHOLES CONSTRUCTED OR REHABILITATED ON THIS PROJECT MUST HAVE WATERTIGHT SIZE ON SIZE RESILIENT CONNECTORS ALLOWING FOR DIFFERENTIAL SETTLEMENT. IF MANHOLES ARE CONSTRUCTED WITHIN THE 100-YEAR FLOODPLAIN, THE COVER MUST HAVE A GASKET AND BE BOLTED TO THE RING. WHERE GASKETED MANHOLE COVERS ARE REQUIRED FOR MORE THAN THREE MANHOLES IN SEQUENCE OR FOR MORE THAN 1500 FEET, ALTERNIATE MEANS OF VENTING WILL BE PROVIDED. BRICKS ARE NOT AN ACCEPTABLE CONSTRUCTION MATERIAL FOR ANY PORTION OF THE MANHOLE.
THE DIAMETER OF THE MANHOLES MUST BE A MINIMUM OF FOUR FEET AND THE MANHOLE FOR ENTRY MUST HAVE A MINIMUM CLEAR OPENING DIAMETER OF 30 INCHES. THESE DIMENSIONS AND OTHER DETAILS SHOWING COMPLIANCE WITH THE COMMISSION'S RULES CONCERNING MANHOLES AND SEWER LINE/MANHOLE INVERTS DESCRIBED IN 30 TAC §217.55 ARE INCLUDED ON PLAN SHEET __ OF __.
IT IS SUGGESTED THAT ENTRANCE INTO MANHOLES IN EXCESS OF FOUR FEET DEEP BE ACCOMPLISHED BY MEANS OF A PORTABLE LADDER. THE INCLUSION OF STEPS IN A MANHOLE IS PROHIBITED.
10. WHERE WATER LINES AND NEW SEWER LINE ARE INSTALLED WITH A SEPARATION DISTANCE CLOSER THAN NINE FEET (I.E., WATER LINES CROSSING WASTEWATER LINES, WATER LINES PARALLELING WASTEWATER LINES, OR WATER LINES NEXT TO MANHOLES) THE INSTALLATION MUST MEET THE REQUIREMENTS OF 30 TAC §217.53(D) (PIPE DESIGN) AND 30 TAC §290.44(E) (WATER DISTRIBUTION).
11. WHERE SEWERS LINES DEVIATE FROM STRAIGHT ALIGNMENT AND UNIFORM GRADE ALL CURVATURE OF SEWER PIPE MUST BE ACHIEVED BY THE FOLLOWING PROCEDURE WHICH IS RECOMMENDED BY THE PIPE MANUFACTURER: N/A

IF PIPE FLEXURE IS PROPOSED, THE FOLLOWING METHOD OF PREVENTING DEFLECTION OF THE JOINT MUST BE N/A
SPECIFIC CARE MUST BE TAKEN TO ENSURE THAT THE JOINT IS PLACED IN THE CENTER OF THE TRENCH AND PROPERLY BEDDED IN ACCORDANCE WITH 30 TAC §217.54.

12. NEW SEWAGE COLLECTION SYSTEM LINES MUST BE CONSTRUCTED WITH STUB OUTS FOR THE CONNECTION OF ANTICIPATED EXTENSIONS. THE LOCATION OF SUCH STUB OUTS MUST BE MARKED ON THE GROUND SUCH THAT THEIR LOCATION CAN BE EASILY DETERMINED AT THE TIME OF CONNECTION OF THE EXTENSIONS. SUCH STUB OUTS MUST BE MANUFACTURED WYES OR TEES THAT ARE COMPATIBLE IN SIZE AND MATERIAL WITH BOTH THE SEWER LINE AND THE EXTENSION. AT THE TIME OF ORIGINAL CONSTRUCTION, NEW STUB-OUTS MUST BE CONSTRUCTED SUFFICIENTLY TO EXTEND BEYOND THE END OF THE STREET PAVEMENT. ALL STUB-OUTS MUST BE SEALED WITH A MANUFACTURED CAP TO PREVENT LEAKAGE. EXTENSIONS THAT WERE NOT ANTICIPATED AT THE TIME OF ORIGINAL CONSTRUCTION OR THAT ARE TO BE CONNECTED TO AN EXISTING SEWER LINE NOT FURNISHED WITH STUB OUTS MUST BE CONNECTED USING A MANUFACTURED SADDLE AND IN ACCORDANCE WITH ACCEPTED PLUMBING TECHNIQUES.
13. TRENCHING, BEDDING AND BACKFILL MUST CONFORM WITH 30 TAC §217.54. THE BEDDING AND BACKFILL FOR FLEXIBLE PIPE MUST COMPLY WITH THE STANDARDS OF ASTM D-2321, CLASSES IA, IB, II OR III. RIGID PIPE BEDDING MUST COMPLY WITH THE REQUIREMENTS OF ASTM C 12 (ANSI A 106.2) CLASSES A, B OR C.
14. SEWER LINES MUST BE TESTED FROM MANHOLE TO MANHOLE. WHEN A NEW SEWER LINE IS CONNECTED TO AN EXISTING STUB OR CLEAN-OUT, IT MUST BE TESTED FROM EXISTING MANHOLE TO NEW MANHOLE. IF A STUB OR CLEAN-OUT IS USED AT THE END OF THE PROPOSED SEWER LINE, NO PRIVATE SERVICE ATTACHMENTS MAY BE CONNECTED BETWEEN THE LAST MANHOLE AND THE CLEANOUT UNLESS IT CAN BE CERTIFIED AS CONFORMING WITH THE PROVISIONS OF 30 TAC §213.5(C)(3)(E).
15. ALL SEWER LINES MUST BE TESTED IN ACCORDANCE WITH 30 TAC §217.57. THE ENGINEER MUST RETAIN COPIES OF ALL TEST RESULTS WHICH MUST BE MADE AVAILABLE TO THE EXECUTIVE DIRECTOR UPON REQUEST. THE ENGINEER MUST CERTIFY IN WRITING THAT ALL WASTEWATER LINES HAVE PASSED ALL REQUIRED TESTING TO THE APPROPRIATE REGIONAL OFFICE WITHIN 30 DAYS OF TEST COMPLETION AND PRIOR TO USE OF THE NEW COLLECTION SYSTEM. TESTING METHOD WILL BE:
(A) FOR A COLLECTION SYSTEM PIPE THAT WILL TRANSPORT WASTEWATER BY GRAVITY FLOW, THE DESIGN MUST SPECIFY AN INFILTRATION AND EXFILTRATION TEST OR A LOW-PRESSURE AIR TEST. A TEST MUST CONFORM TO THE FOLLOWING REQUIREMENTS:
(1) LOW PRESSURE AIR TEST.
(A) A LOW PRESSURE AIR TEST MUST FOLLOW THE PROCEDURES DESCRIBED IN AMERICAN SOCIETY FOR TESTING AND MATERIALS (ASTM) C-828, ASTM C924, OR ASTM F-1417 OR OTHER PROCEDURE APPROVED BY THE EXECUTIVE DIRECTOR, EXCEPT AS TO TESTING TIMES AS REQUIRED IN TABLE C.3 IN SUBPARAGRAPH (C) OF THIS PARAGRAPH OR EQUATION C.3 IN SUBPARAGRAPH (B)(II) OF THIS PARAGRAPH.
(B) FOR SECTIONS OF COLLECTION SYSTEM PIPE LESS THAN 36 INCH AVERAGE INSIDE DIAMETER, THE FOLLOWING PROCEDURE MUST APPLY, UNLESS A PIPE IS TO BE TESTED AS REQUIRED BY PARAGRAPH (2) OF THIS SUBSECTION.
(I) A PIPE MUST BE PRESSURIZED TO 3.5 POUNDS PER SQUARE INCH (PSI) GREATER THAN THE PRESSURE EXERTED BY GROUNDWATER ABOVE THE PIPE.
(II) ONCE THE PRESSURE IS STABILIZED, THE MINIMUM TIME ALLOWABLE FOR THE PRESSURE TO DROP FROM 3.5 PSI GAUGE TO 2.5 PSI GAUGE IS COMPUTED FROM THE FOLLOWING EQUATION:
EQUATION C.3

WHERE:
T = TIME FOR PRESSURE TO DROP 1.0 POUND PER SQUARE INCH GAUGE IN SECONDS
K = 0.000419 X D X L, BUT NOT LESS THAN 1.0
D = AVERAGE INSIDE PIPE DIAMETER IN INCHES
L = LENGTH OF LINE OF SAME SIZE BEING TESTED, IN FEET
Q = RATE OF LOSS, 0.0015 CUBIC FEET PER MINUTE PER SQUARE FOOT INTERNAL SURFACE
(C) SINCE A K VALUE OF LESS THAN 1.0 MAY NOT BE USED, THE MINIMUM TESTING TIME FOR EACH PIPE DIAMETER IS SHOWN IN THE FOLLOWING TABLE C.3:

$$T = \frac{0.085 * D * K}{Q}$$

PIPE DIAMETER(INCHES)	MINIMUM TIME (SECONDS)	MAXIMUM LENGTH FOR MINIMUM TIME (FEET)	TIME FOR LONGER LENGTH (SECONDS/FOOT)
6	340	398	0.855
8	454	298	1.520
10	467	239	2.374
12	680	199	3.419
15	850	159	5.342
19	1020	133	7.693
21	1190	114	10.471
14	1360	100	13.676
17	1530	88	17.309
30	1700	80	21.369
33	1870	72	25.856

(A) AN OWNER MAY STOP A TEST IF NO PRESSURE LOSS HAS OCCURRED DURING THE FIRST 25% OF THE CALCULATED TESTING TIME.
(B) IF ANY PRESSURE LOSS OR LEAKAGE HAS OCCURRED DURING THE FIRST 25% OF A TESTING PERIOD, THEN THE TEST MUST CONTINUE FOR THE ENTIRE TEST DURATION AS OUTLINED ABOVE OR UNTIL FAILURE.
(C) WASTEWATER COLLECTION SYSTEM PIPES WITH A 27 INCH OR LARGER AVERAGE INSIDE DIAMETER MAY BE AIR TESTED AT EACH JOINT INSTEAD OF FOLLOWING THE PROCEDURE OUTLINED IN THIS SECTION.
(D) A TESTING PROCEDURE FOR PIPE WITH AN INSIDE DIAMETER GREATER THAN 33 INCHES MUST BE APPROVED BY THE EXECUTIVE DIRECTOR.
(2) INFILTRATION/EXFILTRATION TEST.
(A) THE TOTAL EXFILTRATION, AS DETERMINED BY A HYDROSTATIC HEAD TEST, MUST NOT EXCEED 50 GALLONS PER INCH OF DIAMETER PER MILE OF PIPE PER 24 HOURS AT A MINIMUM TEST HEAD OF 2.0 FEET ABOVE THE CROWN OF A PIPE AT AN UPSTREAM MANHOLE.
(B) AN OWNER SHALL USE AN INFILTRATION TEST IN LIEU OF AN EXFILTRATION TEST WHEN PIPES ARE INSTALLED BELOW THE GROUNDWATER LEVEL.
(C) THE TOTAL EXFILTRATION, AS DETERMINED BY A HYDROSTATIC HEAD TEST, MUST NOT EXCEED 50 GALLONS PER INCH DIAMETER PER MILE OF PIPE PER 24 HOURS AT A MINIMUM TEST HEAD OF TWO FEET ABOVE THE CROWN OF A PIPE AT AN UPSTREAM MANHOLE, OR AT LEAST TWO FEET ABOVE EXISTING GROUNDWATER LEVEL, WHICHEVER IS GREATER.
(D) FOR CONSTRUCTION WITHIN A 25-YEAR FLOOD PLAIN, THE INFILTRATION OR EXFILTRATION MUST NOT EXCEED 10 GALLONS PER INCH DIAMETER PER MILE OF PIPE PER 24 HOURS AT THE SAME MINIMUM TEST HEAD AS IN SUBPARAGRAPH (C) OF THIS PARAGRAPH.
(E) IF THE QUANTITY OF INFILTRATION OR EXFILTRATION EXCEEDS THE MAXIMUM QUANTITY SPECIFIED, AN OWNER SHALL UNDERTAKE REMEDIAL ACTION IN ORDER TO REDUCE
TCEQ-0596 (REV. JULY 15, 2015) PAGE 5 OF 6
THE INFILTRATION OR EXFILTRATION TO AN AMOUNT WITHIN THE LIMITS SPECIFIED. AN OWNER SHALL RETEST A PIPE FOLLOWING A REMEDIATION ACTION.
(b) IF A GRAVITY COLLECTION PIPE IS COMPOSED OF FLEXIBLE PIPE, DEFLECTION TESTING IS ALSO REQUIRED. THE FOLLOWING PROCEDURES MUST BE FOLLOWED:
(1) FOR A COLLECTION PIPE WITH INSIDE DIAMETER LESS THAN 27 INCHES, DEFLECTION MEASUREMENT REQUIRES A RIGID MANDREL.
(A) MANDREL SIZING.
(i) A RIGID MANDREL MUST HAVE AN OUTSIDE DIAMETER (OD) NOT LESS THAN 95% OF THE BASE INSIDE DIAMETER (ID) OR AVERAGE ID OF A PIPE, AS SPECIFIED IN THE APPROPRIATE STANDARD BY THE ASTMS, AMERICAN WATER WORKS ASSOCIATION, UNI-BELL, OR AMERICAN NATIONAL STANDARDS INSTITUTE, OR ANY RELATED APPENDIX.
(ii) IF A MANDREL SIZING DIAMETER IS NOT SPECIFIED IN THE APPROPRIATE STANDARD, THE MANDREL MUST HAVE AN OD EQUAL TO 95% OF THE ID OF A PIPE. IN THIS CASE, THE ID OF THE PIPE, FOR THE PURPOSE OF DETERMINING THE OD OF THE MANDREL, MUST EQUAL BE THE AVERAGE OUTSIDE DIAMETER MINUS TWO MINIMUM WALL THICKNESSES FOR OD CONTROLLED PIPE AND THE AVERAGE INSIDE DIAMETER FOR ID CONTROLLED PIPE.
(iii) ALL DIMENSIONS MUST MEET THE APPROPRIATE STANDARD.
(B) MANDREL DESIGN.
(i) A RIGID MANDREL MUST BE CONSTRUCTED OF A METAL OR A RIGID PLASTIC MATERIAL THAT CAN WITHSTAND 200 PSI WITHOUT BEING DEFORMED.
(ii) A MANDREL MUST HAVE NINE OR MORE ODD NUMBER OF RUNNERS OR LEGS.
(ii) A BARREL SECTION LENGTH MUST EQUAL AT LEAST 75% OF THE INSIDE DIAMETER OF A PIPE.
(iv) EACH SIZE MANDREL MUST USE A SEPARATE PROVING RING.
(C) METHOD OPTIONS.
(i) AN ADJUSTABLE OR FLEXIBLE MANDREL IS PROHIBITED.
(ii) A TEST MAY NOT USE TELEVISION INSPECTION AS A SUBSTITUTE FOR A DEFLECTION TEST.
(iii) IF REQUESTED, THE EXECUTIVE DIRECTOR MAY APPROVE THE USE OF A DEFLECTOMETER OR A MANDREL WITH REMOVABLE LEGS OR RUNNERS ON A CASE-BY-CASE BASIS.
(2) FOR A GRAVITY COLLECTION SYSTEM PIPE WITH AN INSIDE DIAMETER 27 INCHES AND GREATER, OTHER TEST METHODS MAY BE USED TO DETERMINE VERTICAL DEFLECTION.
(3) A DEFLECTION TEST METHOD MUST BE ACCURATE TO WITHIN PLUS OR MINUS 0.2% DEFLECTION.
(4) AN OWNER SHALL NOT CONDUCT A DEFLECTION TEST UNTIL AT LEAST 30 DAYS AFTER THE FINAL
BACKFILL.
(5) GRAVITY COLLECTION SYSTEM PIPE DEFLECTION MUST NOT EXCEED FIVE PERCENT (5%).
(6) IF A PIPE SECTION FAILS A DEFLECTION TEST, AN OWNER SHALL CORRECT THE PROBLEM AND
CONDUCT A SECOND TEST AFTER THE FINAL BACKFILL HAS BEEN IN PLACE AT LEAST 30 DAYS.
16. ALL MANHOLES MUST BE TESTED TO MEET OR EXCEED THE REQUIREMENTS OF 30 TAC §217.58.
(a) ALL MANHOLES MUST PASS A LEAKAGE TEST.
(b) AN OWNER SHALL TEST EACH MANHOLE (AFTER ASSEMBLY AND BACKFILLING) FOR LEAKAGE,
SEPARATE AND INDEPENDENT OF THE COLLECTION SYSTEM PIPES, BY HYDROSTATIC EXFILTRATION
TESTING, VACUUM TESTING, OR OTHER METHOD APPROVED BY THE EXECUTIVE DIRECTOR.
(1) HYDROSTATIC TESTING.
(A) THE MAXIMUM LEAKAGE FOR HYDROSTATIC TESTING OR ANY ALTERNATIVE TEST METHODS IS 0.025 GALLONS PER FOOT DIAMETER PER FOOT OF MANHOLE DEPTH PER HOUR.
(B) TO PERFORM A HYDROSTATIC EXFILTRATION TEST, AN OWNER SHALL SEAL ALL WASTEWATER PIPES COMING INTO A MANHOLE WITH AN INTERNAL PIPE PLUG, FILL THE MANHOLE WITH WATER, AND MAINTAIN THE TEST FOR AT LEAST ONE HOUR.
(C) A TEST FOR CONCRETE MANHOLES MAY USE A 24-HOUR WETTING PERIOD BEFORE TESTING TO ALLOW SATURATION OF THE CONCRETE.
(2) VACUUM TESTING.
(A) TO PERFORM A VACUUM TEST, AN OWNER SHALL PLUG ALL LIFT HOLES AND EXTERIOR
JOINTS WITH A NON-SHRINK GROUT AND PLUG ALL PIPES ENTERING A MANHOLE.
(B) NO GROUT MUST BE PLACED IN HORIZONTAL JOINTS BEFORE TESTING.
(C) STUB-OUTS, MANHOLE BOOTS, AND PIPE PLUGS MUST BE SECURED TO PREVENT MOVEMENT WHILE A VACUUM IS DRAWN.
(D) AN OWNER SHALL USE A MINIMUM 60 INCH/LB TORQUE WRENCH TO TIGHTEN THE EXTERNAL CLAMPS THAT SECURE A TEST COVER TO THE TOP OF A MANHOLE.
(E) A TEST HEAD MUST BE PLACED AT THE INSIDE OF THE TOP OF A CONE SECTION, AND THE SEAL INFLATED IN ACCORDANCE WITH THE MANUFACTURER'S RECOMMENDATIONS.
(F) THERE MUST BE A VACUUM OF 10 INCHES OF MERCURY INSIDE A MANHOLE TO PERFORM A VALID TEST.
(G) A TEST DOES NOT BEGIN UNTIL AFTER THE VACUUM PUMP IS OFF.
(H) A MANHOLE PASSES THE TEST IF AFTER 2.0 MINUTES AND WITH ALL VALVES CLOSED, THE VACUUM IS AT LEAST 9.0 INCHES OF MERCURY.
17. ALL PRIVATE SERVICE LATERALS MUST BE INSPECTED AND CERTIFIED IN ACCORDANCE WITH 30 TAC
§213.5(C)(3)(I). AFTER INSTALLATION OF AND, PRIOR TO COVERING AND CONNECTING A PRIVATE SERVICE
LATERAL TO AN EXISTING ORGANIZED SEWAGE COLLECTION SYSTEM, A TEXAS LICENSED PROFESSIONAL
ENGINEER, TEXAS REGISTERED SANITARIAN, OR APPROPRIATE CITY INSPECTOR MUST VISUALLY INSPECT THE
PRIVATE SERVICE LATERAL AND THE CONNECTION TO THE SEWAGE COLLECTION SYSTEM, AND CERTIFY THAT IT IS
CONSTRUCTED IN CONFORMITY WITH THE APPLICABLE PROVISIONS OF THIS SECTION. THE OWNER OF THE
COLLECTION SYSTEM MUST MAINTAIN SUCH CERTIFICATIONS FOR FIVE YEARS AND FORWARD COPIES TO THE
APPROPRIATE REGIONAL OFFICE UPON REQUEST. CONNECTIONS MAY ONLY BE MADE TO AN APPROVED
SEWAGE COLLECTION SYSTEM.

TCEQ AUSTIN REGIONAL OFFICE
12100 PARK 35 CIRCLE, BUILDING A
AUSTIN, TEXAS 78753-1808
PHONE: (512) 339-2929
FAX: (512) 339-3795

Westwood
Phone (512) 485-0831
Toll Free (888) 937-5150
8701 N. Mopac Expy, Suite 320
Austin, TX 78759
westwoodps.com
Westwood Professional Services, Inc.
TBPE FIRM REGISTRATION NO. F-11756
TBPLS FIRM REGISTRATION NO. LS-10074301

REVISIONS

NO.	DATE	DESCRIPTION	BY

DBC WASTEWATER INTERCEPTOR
CIVIL INFRASTRUCTURE
GEORGETOWN, TEXAS, 78633

TCEQ NOTES

STATE OF TEXAS
JACOB W. VALENTIEN
124993
LICENSED
PROFESSIONAL ENGINEER

THE SEAL APPEARING ON THIS DOCUMENT WAS AUTHORIZED BY SUPERVISON OF JACOB W. VALENTIEN, P.E. 124993 ON 3/1/2024. ALTERATION OF A SEALED DOCUMENT WITHOUT PROPER NOTIFICATION TO THE RESPONSIBLE ENGINEER IS AN OFFENSE UNDER THE TEXAS ENGINEERING PRACTICE ACT.

DESIGN	DRAWN	DATE
JWV	SAG	MAR 2024

SHEET NO.
3
3 OF 66

TGLASPER
3/1/2024 10:52 AM
M:\DWG-46\4670-22.676\DWG\CIVIL C3D 2018\02_SHEETS\COVR\4670-22.676_COVR.DWG

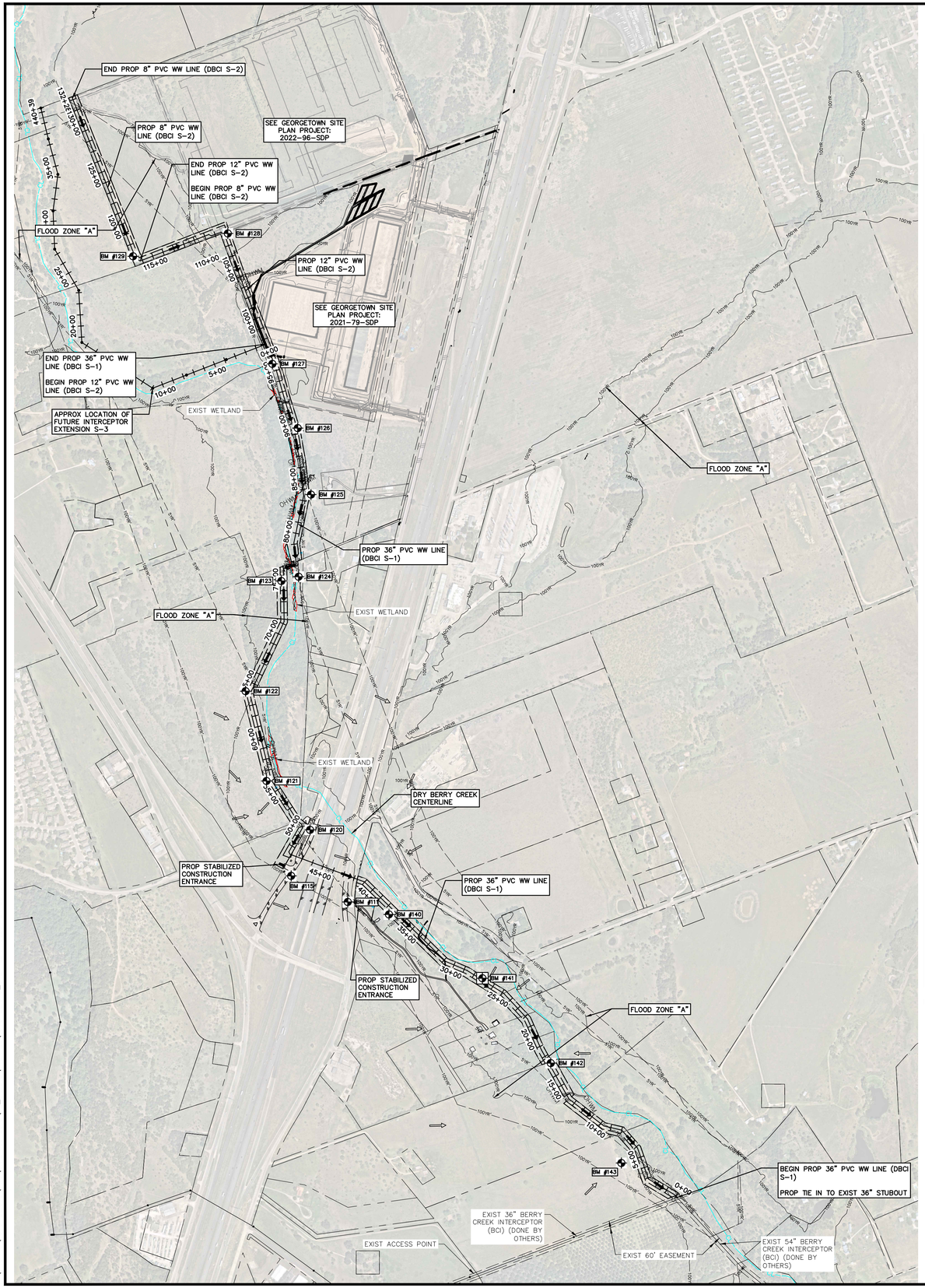

WASTEWATER ROUTE OWNERSHIP				
LOT	ACREAGE	OWNER	PROPERTY ID	DOCUMENT NUMBER / VOLUME/PAGE
1	41.26	SCHWEGMANN, DAVID & KATHERINE	R039044	9613146
2	19.69	LESTER MERLIN (TOD) & DAVID LESTER	R039080	2016079509
3	38.13	BERRY CREEK PARTNERS LP	R038978	2022119279
4	38.15	BERRY CREEK PARTNERS LP	R039046	2022119170
5	111.76	REALMAC LTD	R081951	2005065439
6	5.03	JAMES MCELHANON AND GAYLE MCELHANON	R329743	2007028160
7	63.90	ISCHY, DEBBY & STEVEN ISCHY ET AL	R038982	2013088018
8	2.80	PETROLEUM WHOLESALE LP	R038964	2003011087
9	14.63	SPEEDY STOP FOODS STORES LTD	R038950	2005027452
10	10.63	BUCHHORN, KENNETH & KATHRYN TR KENNETH & KATHRYN BUCHHORN REVOC MANAGEMENT TRUST	R108653	2017039117
11	5.00	JAMES MCELHANON AND WIFE, GAYLE MCELHANON	R329742	VOLUME 2110, PAGE 565
12	10.35	GAYLE MCELHANON JAMES MCELHANON	R055003	9911922
13	14.52	GAYLE ANN MCELHANON	R475017	2006038163
14	3.10	LESAK, JENEKE H & MARGARET L GRIFFIN	R445832	2018109487
15	1.32	SPEEDY STOP FOODS STORES LTD	R468139	2005027452
16	8.50	MCELHANON, GAYLE & JAMES & RICHARD & JEAN BUCHHORN	R343150	2022139842
17	4.63	SPEEDY STOP FOODS STORES, LTD	R315061	2006049946
18	1.51	LANDRY, HOWARD NEAL	R566474	VOLUME 1732, PAGE 0249
19	72.00	THE TRAILS, LLC	R039052	2022094181
20	2.88	LANDRY, HOWARD NEAL	R566477	VOLUME 1732, PAGE 0249
21	1.00	LANDRY, HOWARD NEAL	R566478	VOLUME 1732, PAGE 0249
22	6.28	LANDRY, HOWARD NEAL	R566479	VOLUME 1732, PAGE 0249
23	4.10	LANDRY, HOWARD NEAL	R038928	VOLUME 1732, PAGE 0249
24	1.25	LANDRY, HOWARD NEAL	R038929	VOLUME 1732, PAGE 0249
25	13.68	THOMAS JAMES RUSSELL	R040514	VOLUME 1322, PAGE 593
26	44.97	GT 195 HOLDINGS, LLC	R450909	2021150671
27	2.80	JSACQ GEORGETOWN LP	R040496	2022012116
28	51.02	JSACQ GEORGETOWN LP	R040508	2022012116
29	54.30	FAYERBERG, IRINA I & JORGE O ZAMORA	R327449	2014088568
30	6.33	DRI JS GEORGETOWN II LLC	R629215	2022012116
31	56.14	DRI JS GEORGETOWN II LLC	R629214	2022012116
32	107.30	DRI JS GEORGETOWN II LLC	R647046	2022012307
33	26.26	SAN GABRIEL INVESTMENTS LTD	R462452	2004079454
34	34.41	GRACE ACADEMY OF GEORGETOWN	R486606	2006062617
35	193.07	STRONG, LINDA IRVINE	R011524	2019068288

NOTES:

1. COORDINATES ARE SURFACE VALUES BASED ON THE TEXAS STATE PLANE COORDINATE SYSTEM, NAD 83, CENTRAL ZONE 4203. TO CONVERT COORDINATES AND DISTANCES TO GRID VALUES MULTIPLY BY A COMBINED SURFACE ADJUSTMENT FACTOR OF 0.999465. ELEVATIONS REPORTED ARE ORTHOMETRIC HEIGHTS BASED ON NAVD 88.
2. ALL PROPERTY INFORMATION FROM TABLE WASTEWATER ROUTE OWNERSHIP WAS GATHERED FROM WCAD AND IS UP TO DATE AS OF 01/31/2024 https://www.wcad.org/
3. THE CITY OF GEORGETOWN (THE CITY) PROVIDED WESTWOOD PROFESSIONAL SERVICES (WESTWOOD) WITH AN UPDATED WASTEWATER MASTER PLAN (WWMP) ON JUNE 28TH, 2022. THE DRY BERRY CREEK INTERCEPTOR (DBCI) PORTION S-1 WAS SIZED AT 36-INCHES AND PORTION S-2 WAS SIZED AT 8-INCHES AND 12-INCHES BASED ON THE UPDATED WWMP. THE CITY CONFIRMED ON NOVEMBER 11, 2022 THAT PORTION S-1 MUST REMAIN AT A MINIMUM SLOPE OF 0.325%. WESTWOOD SUBMITTED THE DBCI 30% CONSTRUCTION PLAN SET TO THE CITY ON APRIL 23, 2023 AND RECEIVED COMMENTS FROM THE CITY ON MAY 24TH, 2023. DBCI WILL TIE INTO THE BERRY CREEK INTERCEPTOR (BCI). THE TIE-IN ELEVATION WAS PROVIDED BY TRISTAN A. ROBLES, P.E. ON APRIL 26TH, 2023. THE DRY BERRY CREEK CENTERLINE WAS PROVIDED ON MAY 9, 2023 BY DAVID W. PEEK , P.E. FROM QUIDDITY. THE QUIDDITY CONSTRUCTION PLANS WERE STAMPED AND SEALED BY JOHN A. ALVEREZ III, P.E. ON MAY 3, 2023. ALL COMMENTS FROM THE CITY REGARDING THE 30% DESIGN CONSTRUCTION PLAN SET HAS BEEN ADDRESSED IN THIS 90% CONSTRUCTION PLAN SET. THE CITY PROVIDED WESTWOOD WITH AN UPDATED WWMP ON NOVEMBER 28TH, 2023. ALL COMMENTS FROM THE CITY REGARDING THE 90% DESIGN CONSTRUCTION PLAN SET HAS BEEN ADDRESSED IN THIS 100% CONSTRUCTION PLAN SET.
4. QUIDDITY PROVIDED WESTWOOD WITH STUDIED ELEVATIONS FOR THE FEMA FLOOD ZONE "A" (100YR') FLOODPLAIN. THE STUDIED ELEVATIONS WERE PROVIDED BY JEFF M. BRINDLE ON MAY 9TH, 2023.
5. IN THE EVENT THAT THE CONTRACTOR ENCOUNTERS UNSTABLE OR UNSUITABLE SOILS, THEN BACKFILL SHALL BE PER THE GEOTECHNICAL REPORT AND PER THE UNSUITABLE SOIL DETAIL. GEOTECHNICAL ANALYSIS WAS COMPLETED BY TERRACON IN THE REPORT "DRY BERRY CREEK WW INTERCEPTOR" ON FEBRUARY 2, 2024.

SURVEY CONTROL AND BENCHMARKS				
POINT NO.	GRID NORTHING	GRID EASTING	ELEV	DESCRIPTION
111	10229613.37'	3139638.74'	695.48'	MAG/S – BM
115	10229847.70'	3139130.44'	706.32'	MAG/S – BM
120	10230261.07'	3139299.90'	694.76'	CIRS "WWPS" – BM
121	10230700.08'	3138908.76'	694.08'	CIRS "WWPS" – BM
122	10231506.14'	3138720.64'	696.50'	CIRS "WWPS" – BM
123	10232495.88'	3139042.01'	692.42'	CIRS "WWPS" – BM
124	10232534.27'	3139197.07'	696.48'	CIRS "WWPS" – BM
125	10233271.63'	3139308.28'	706.52'	CIRS "WWPS" – BM
126	10233868.47'	3139188.81'	712.42'	CIRS "WWPS" – BM
127	10234445.32'	3138961.35'	718.91'	CIRS "WWPS" – BM
128	10235616.19'	3138561.32'	711.13'	CIRS "WWPS" – BM
129	10235411.13'	3137753.13'	707.62'	CIRS "WWPS" – BM
140	10229501.20'	3140008.42'	685.76'	CIRS "WWPS" – BM
141	10228928.72'	3140847.59'	680.47'	CIRS "WWPS" – BM
142	10228166.46'	3141461.45'	678.41'	CIRS "WWPS" – BM
143	10227269.68'	3142095.88'	678.13'	CIRS "WWPS" – BM

0 250 500 1000 1500
HORIZONTAL SCALE IN FEET
1"=500'

LEGEND

- EXIST BOLLARD
- EXIST ELECTRIC METER
- EXIST POWER POLE
- EXIST LIGHT STANDARD
- EXIST WATER METER
- EXIST WATER VALVE
- EXIST IRRIGATION CONTROL VALVE
- EXIST FIRE HYDRANT
- EXIST CLEANOUT
- EXIST MANHOLE
- EXIST TRAFFIC SIGNAL CONTROL
- EXIST TRAFFIC SIGNAL POLE
- EXIST TELEPHONE BOX
- EXIST FLOOD LIGHT
- EXIST FLAG POLE
- EXIST TRAFFIC SIGN
- 1/2-INCH IRON ROD W/"PACHECO KOCH" CAP SET
- CONTROLLING MONUMENT
- HERITAGE TREE
- PROTECTED/REGULATED TREE
- UNREGULATED/UNDERSIZED TREE
- BORING LOCATION
- PIEZOMETERS
- DRAINAGE FLOW DIRECTION
- DBCI FLOW DIRECTION
- PROP SANITARY SEWER MANHOLE
- UNDERGROUND STORM LINE
- DEMOLITION AREA
- PROPOSED CONSTRUCTION ENTRANCE
- BORING LOCATION CROSS SECTION
- INLET PROTECTION
- EXIST PROPERTY LINE
- EXIST FENCE
- EXIST CONTOUR
- PROPERTY LINE
- EXIST OVERHEAD UTILITY LINE
- EXIST FIBER OPTIC LINE
- EXIST UNDERGROUND ELECTRIC LINE
- EXIST UNDERGROUND TELEPHONE LINE
- EXIST UNDERGROUND CABLE LINE
- EXIST UNDERGROUND WATER LINE
- EXIST UNDERGROUND SANITARY SEWER LINE
- EXIST WETLANDS
- FEMA FLOOD PLAIN LIMITS 100-YR FLOODPLAIN LIMITS
- BERRY CREEK INTERCEPTOR (BCI)
- DRY BERRY CREEK INTERCEPTOR (DBCI)
- DRY BERRY CREEK CENTERLINE
- ORDINARY HIGH WATER MARK (OHWM)
- LIMITS OF CONSTRUCTION
- SILT FENCE (LIMITS OF DISTURBED AREA)
- UTILITY EASEMENT
- MULCH LOG
- 5 YEAR' FUTURE FLOODPLAIN
- 100 YEAR' FUTURE FLOODPLAIN

Westwood
Phone (512) 485-0831
Toll Free (888) 937-5150
8701 N. Mopac Expy, Suite 320
Austin, TX 78759
westwoodps.com
Westwood Professional Services, Inc.
TBPE FIRM REGISTRATION NO. F-11756
TBPLS FIRM REGISTRATION NO. LS-10074301

REVISIONS

NO.	DESCRIPTION	DATE	BY

DBC WASTEWATER INTERCEPTOR
CIVIL INFRASTRUCTURE
GEORGETOWN, TEXAS, 78633

OVERALL PROJECT LAYOUT

STATE OF TEXAS
JACOB W. VALENTIEN
124993
LICENSED PROFESSIONAL ENGINEER

THE SEAL APPEARING ON THIS DOCUMENT WAS AUTHORIZED BY SUPERVISION OF JACOB W. VALENTIEN, P.E. 124993 ON 3/4/2024. ALTERATION OF A SEALED DOCUMENT WITHOUT PROPER NOTIFICATION TO THE RESPONSIBLE ENGINEER IS AN OFFENSE UNDER THE TEXAS ENGINEERING PRACTICE ACT.

DESIGN	DRAWN	DATE
JWV	SAG	MAR 2024

SHEET NO. 4

JVALENTIEN
3/4/2024 8:53 AM
M:\DWG-46\4670-22.676\DWG\CIVIL C3D 2018\02_SHEETS\OVERALL\4670-22.676_OVERALL PROJECT LAYOUT.DWG

PK-4670-22.676_OVERALL PROJECT LAYOUT.DWG

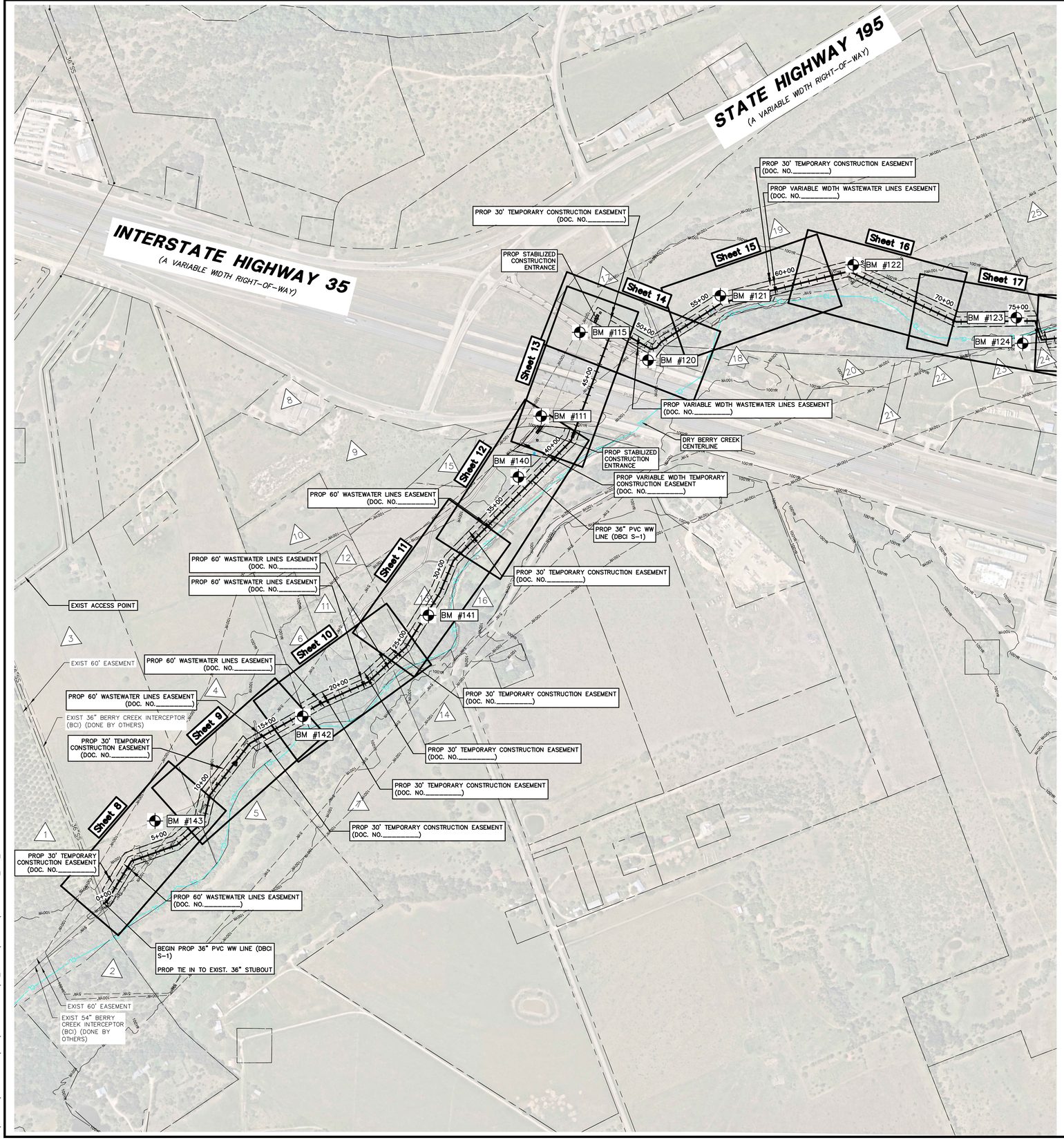

0 150 300 600 900

GRAPHIC SCALE IN FEET
1"=300'

WASTEWATER ROUTE OWNERSHIP				
LOT	ACREAGE	OWNER	PROPERTY ID	DOCUMENT NUMBER / VOLUME/PAGE
1	41.26	SCHWEGMANN, DAVID & KATHERINE	R039044	9613146
2	19.69	LESTER MERLIN (TOD) & DAVID LESTER	R039080	2016079509
3	38.13	BERRY CREEK PARTNERS LP	R038978	2022119279
4	38.15	BERRY CREEK PARTNERS LP	R039046	2022119170
5	111.76	REALMAC LTD	R081951	2005065439
6	5.03	JAMES MCELHANON AND GAYLE MCELHANON	R329743	2007028160
7	63.90	ISCHY, DEBBY & STEVEN ISCHY ET AL	R038982	2013088018
8	2.80	PETROLEUM WHOLESALE LP	R038964	2003011087
9	14.63	SPEEDY STOP FOODS STORES LTD	R038950	2005027452
10	10.63	BUCHHORN, KENNETH & KATHRYN TR KENNETH & KATHRYN BUCHHORN REVOC MANAGEMENT TRUST	R108653	2017039117
11	5.00	JAMES MCELHANON AND WIFE, GAYLE MCELHANON	R329742	VOLUME 2110, PAGE 565
12	10.35	GAYLE MCELHANON JAMES MCELHANON	R055003	9911922
13	14.52	GAYLE ANN MCELHANON	R475017	2006038163
14	3.10	LESAK, JENEKE H & MARGARET L GRIFFIN	R445832	2018109487
15	1.32	SPEEDY STOP FOODS STORES LTD	R468139	2005027452
16	8.50	MCELHANON, GAYLE & JAMES & RICHARD & JEAN BUCHHORN	R343150	2022139842
17	4.63	SPEEDY STOP FOODS STORES, LTD	R315061	2006049946
18	1.51	LANDRY, HOWARD NEAL	R566474	VOLUME 1732, PAGE 0249
19	72.00	THE TRAILS, LLC	R039052	2022094181
20	2.88	LANDRY, HOWARD NEAL	R566477	VOLUME 1732, PAGE 0249
21	1.00	LANDRY, HOWARD NEAL	R566478	VOLUME 1732, PAGE 0249
22	6.28	LANDRY, HOWARD NEAL	R566479	VOLUME 1732, PAGE 0249
23	4.10	LANDRY, HOWARD NEAL	R038928	VOLUME 1732, PAGE 0249
24	1.25	LANDRY, HOWARD NEAL	R038929	VOLUME 1732, PAGE 0249
25	13.68	THOMAS JAMES RUSSELL	R040514	VOLUME 1322, PAGE 593

NOTES:

1. ALL PROPERTY INFORMATION FROM TABLE WASTEWATER ROUTE OWNERSHIP WAS GATHERED FROM WCAD AND IS UP TO DATE AS OF 01/31/2024 HTTPS://WWW.WCAD.ORG/

THE FOLLOWING CONTROL POINTS ARE VERTICAL CONTROL ONLY. NORTHING & EASTING VALUES ARE ONLY FOR GENERAL LOCATING PURPOSES AND ARE NOT TO BE USED FOR HORIZONTAL CONTROL.

SURVEY CONTROL AND BENCHMARKS

POINT NO.	GRID NORTHING	GRID EASTING	ELEV	DESCRIPTION
111	10229613.37'	3139638.74'	695.48'	MAG/S – BM
115	10229847.70'	3139130.44'	706.32'	MAG/S – BM
120	10230261.07'	3139299.90'	694.76'	CIRS "WWPS" – BM
121	10230700.08'	3138908.76'	694.08'	CIRS "WWPS" – BM
122	10231506.14'	3138720.64'	696.50'	CIRS "WWPS" – BM
123	10232495.88'	3139042.01'	692.42'	CIRS "WWPS" – BM
124	10232534.27'	3139197.07'	696.48'	CIRS "WWPS" – BM
125	10233271.63'	3139308.28'	706.52'	CIRS "WWPS" – BM
126	10233868.47'	3139188.81'	712.42'	CIRS "WWPS" – BM
127	10234445.32'	3138961.35'	718.91'	CIRS "WWPS" – BM
128	10235616.19'	3138561.32'	711.13'	CIRS "WWPS" – BM
129	10235411.13'	3137753.13'	707.62'	CIRS "WWPS" – BM
140	10229501.20'	3140008.42'	685.76'	CIRS "WWPS" – BM
141	10228928.72'	3140847.59'	680.47'	CIRS "WWPS" – BM
142	10228166.46'	3141461.45'	678.41'	CIRS "WWPS" – BM
143	10227269.68'	3142095.88'	678.13'	CIRS "WWPS" – BM

Westwood
Phone (512) 485-0831
Toll Free (888) 937-5150
8701 N. Mopac Expy, Suite 320
Austin, TX 78759
westwoodps.com
Westwood Professional Services, Inc.
TBPE FIRM REGISTRATION NO. F-11756
TBPLS FIRM REGISTRATION NO. LS-10074301

REVISIONS

NO.	DATE	DESCRIPTION	BY

DBC WASTEWATER INTERCEPTOR
CIVIL INFRASTRUCTURE
GEORGETOWN, TEXAS, 78633

DRAWING INDEX SHEET 1 OF 2

STATE OF TEXAS
JACOB W. VALENTIEN
124993
LICENSED
PROFESSIONAL ENGINEER

THE SEAL APPEARING ON THIS DOCUMENT WAS AUTHORIZED BY SUPERVISION OF JACOB W. VALENTIEN, P.E. 124993 ON 3/1/2024. ALTERATION OF A SEALED DOCUMENT WITHOUT PROPER NOTIFICATION TO THE RESPONSIBLE ENGINEER IS AN OFFENSE UNDER THE TEXAS ENGINEERING PRACTICE ACT.

DESIGN	DRAWN	DATE
JWV	SAG	MAR 2024

SHEET NO.
5
5 OF 66

TGLASPER
3/1/2024 5:06 PM
M:\DWG-46\4670-22.676\DWG\CIVIL C3D 2018\02_SHEETS\OVERALL\4670-22.676_DWG_INDEX.DWG

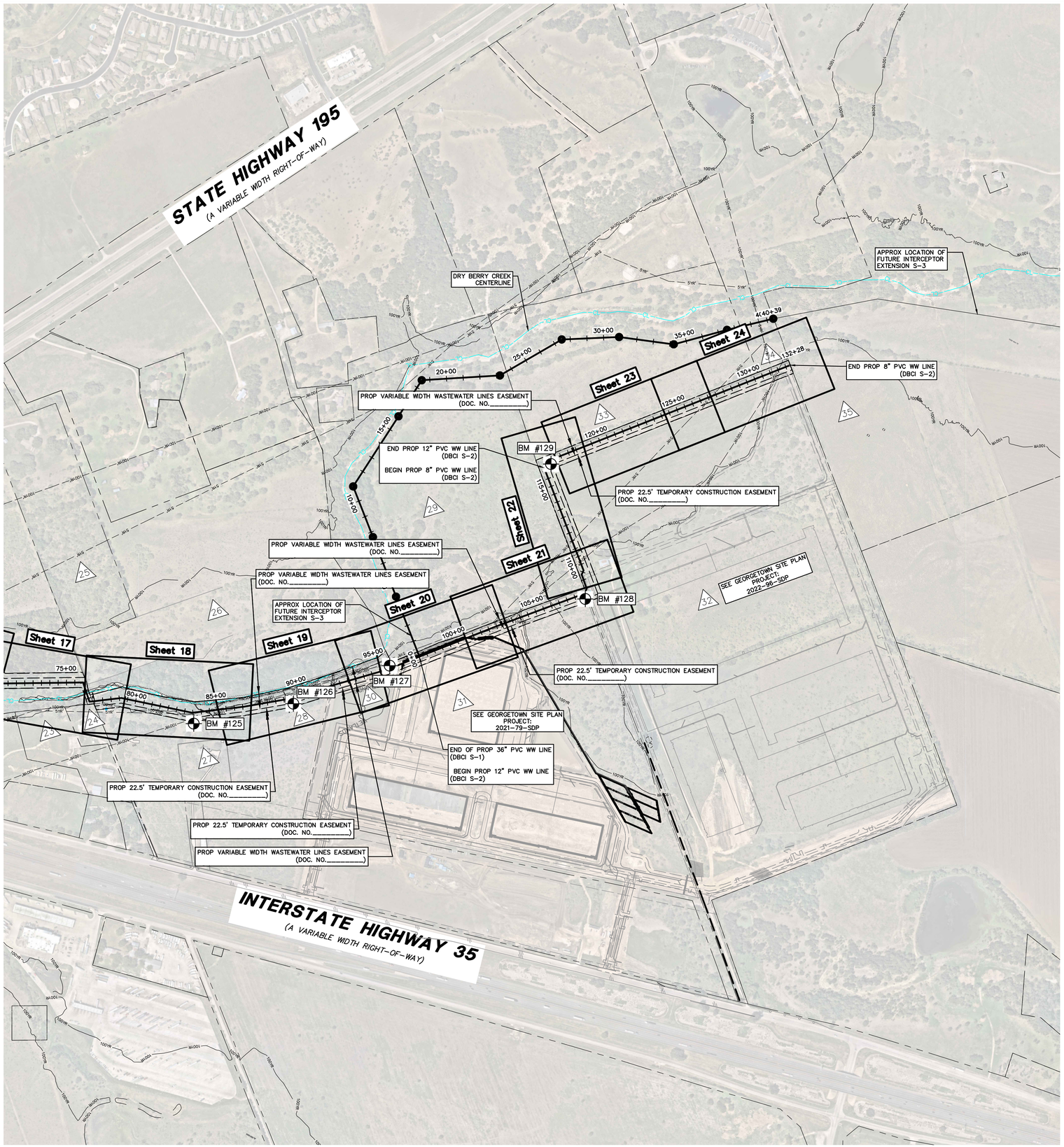

0 100 200 400 600

GRAPHIC SCALE IN FEET
1"=300'

WASTEWATER ROUTE OWNERSHIP				
LOT	ACREAGE	OWNER	PROPERTY ID	DOCUMENT NUMBER / VOLUME/PAGE
23	4.10	LANDRY, HOWARD NEAL	R038928	VOLUME 1732, PAGE 0249
24	1.25	LANDRY, HOWARD NEAL	R038929	VOLUME 1732, PAGE 0249
25	13.68	THOMAS JAMES RUSSELL	R040514	VOLUME 1322, PAGE 593
26	44.97	GT 195 HOLDINGS, LLC	R450909	2021150671
27	2.80	JSACQ GEORGETOWN LP	R040496	2022012116
28	51.02	JSACQ GEORGETOWN LP	R040508	2022012116
29	54.30	FAYERBERG, IRINA I & JORGE O ZAMORA	R327449	2014088568
30	6.33	DRI JS GEORGETOWN II LLC	R629215	2022012116
31	56.14	DRI JS GEORGETOWN II LLC	R629214	2022012116
32	107.30	DRI JS GEORGETOWN II LLC	R647046	2022012307
33	26.26	SAN GABRIEL INVESTMENTS LTD	R462452	2004079454
34	34.41	GRACE ACADEMY OF GEORGETOWN	R486606	2006062617
35	193.07	STRONG, LINDA IRVINE	R011524	2019068288

NOTES:

1. ALL PROPERTY INFORMATION FROM TABLE WASTEWATER ROUTE OWNERSHIP WAS GATHERED FROM WCAD AND IS UP TO DATE AS OF 01/31/2024 HTTPS://WWW.WCAD.ORG/

THE FOLLOWING CONTROL POINTS ARE VERTICAL CONTROL ONLY. NORTHING & EASTING VALUES ARE ONLY FOR GENERAL LOCATING PURPOSES AND ARE NOT TO BE USED FOR HORIZONTAL CONTROL.

SURVEY CONTROL AND BENCHMARKS				
POINT NO.	GRID NORTHING	GRID EASTING	ELEV	DESCRIPTION
111	10229613.37'	3139638.74'	695.48'	MAG/S – BM
115	10229847.70'	3139130.44'	706.32'	MAG/S – BM
120	10230261.07'	3139299.90'	694.76'	CIRS "WWPS" – BM
121	10230700.08'	3138908.76'	694.08'	CIRS "WWPS" – BM
122	10231506.14'	3138720.64'	696.50'	CIRS "WWPS" – BM
123	10232495.88'	3139042.01'	692.42'	CIRS "WWPS" – BM
124	10232534.27'	3139197.07'	696.48'	CIRS "WWPS" – BM
125	10233271.63'	3139308.28'	706.52'	CIRS "WWPS" – BM
126	10233868.47'	3139188.81'	712.42'	CIRS "WWPS" – BM
127	10234445.32'	3138961.35'	718.91'	CIRS "WWPS" – BM
128	10235616.19'	3138561.32'	711.13'	CIRS "WWPS" – BM
129	10235411.13'	3137753.13'	707.62'	CIRS "WWPS" – BM
140	10229501.20'	3140008.42'	685.76'	CIRS "WWPS" – BM
141	10228928.72'	3140847.59'	680.47'	CIRS "WWPS" – BM
142	10228166.46'	3141461.45'	678.41'	CIRS "WWPS" – BM
143	10227269.68'	3142095.88'	678.13'	CIRS "WWPS" – BM

Westwood
Phone (512) 485-0831
Toll Free (888) 937-5150
8701 N. Mopac Expy, Suite 320
Austin, TX 78759
westwoodps.com
Westwood Professional Services, Inc.
TBPE FIRM REGISTRATION NO. F-11756
TBPLS FIRM REGISTRATION NO. LS-10074301

REVISIONS

NO.	DESCRIPTION	DATE	BY

DBC WASTEWATER INTERCEPTOR
CIVIL INFRASTRUCTURE
GEORGETOWN, TEXAS, 78633

DRAWING INDEX SHEET 2 OF 2

STATE OF TEXAS
JACOB W. VALENTIEN
124993
LICENSED
PROFESSIONAL ENGINEER

THE SEAL APPEARING ON THIS DOCUMENT WAS AUTHORIZED BY SUPERVISION OF JACOB W. VALENTIEN, P.E. 124993 ON 3/1/2024. ALTERATION OF A SEALED DOCUMENT WITHOUT PROPER NOTIFICATION TO THE RESPONSIBLE ENGINEER IS AN OFFENSE UNDER THE TEXAS ENGINEERING PRACTICE ACT.

DESIGN	DRAWN	DATE
JWV	SAG	MAR 2024

SHEET NO.
6
6 OF 66

TGLASPER
3/1/2024 5:06 PM
M:\DWG-46\4670-22.676\DWG\CIVIL C3D 2018\02_SHEETS\OVERALL\4670-22.676_DWG_INDEX.DWG

PK-4670-22.676_DWG_INDEX.DWG

GRAPHIC SCALE IN FEET
1"=200'

EXIST ACCESS POINT
EXIST 36 " BERRY CREEK INTERCEPTOR (BCI) (DONE BY OTHERS)
EXIST 60' EASEMENT
EXIST 54" BERRY CREEK INTERCEPTOR (BCI) (DONE BY OTHERS)
FLOOD ZONE "A"
SILT FENCE
DRY BERRY CREEK CENTERLINE
SEE DETAIL 1 NEXT SHEET
SEE DETAIL 2 NEXT SHEET
MULCH LOGS
EXIST WETLAND
INTERSTATE HIGHWAY 35
(A VARIABLE WIDTH RIGHT-OF-WAY)

MATCH LINE - SEE THIS SHEET

KEYMAP
1" = 2000'

NOTES:

1. REFER TO OVERALL PROJECT LAYOUT FOR PROPERTY TABLE

MATCH LINE - SEE THIS SHEET

INTERSTATE HIGHWAY 35
(A VARIABLE WIDTH RIGHT-OF-WAY)

GRAPHIC SCALE IN FEET
1"=200'

SEE DETAIL 3 NEXT SHEET
APPROX LOCATION OF FUTURE INTERCEPTOR EXTENSION S-3
PROP 8" PVC WW LINE (DBCI S-2)
PROP 12" PVC WW LINE (DBCI S-2)
SEE GEORGETOWN SITE PLAN PROJECT: 2022-96-SDP
SEE GEORGETOWN SITE PLAN PROJECT: 2021-79-SDP

Westwood
Phone (512) 485-0831
Toll Free (888) 937-5150
8701 N. Mopac Expy, Suite 320
Austin, TX 78759
westwoodps.com
Westwood Professional Services, Inc.
TBPE FIRM REGISTRATION NO. F-11756
TBPLS FIRM REGISTRATION NO. LS-10074301

REVISIONS

NO.	DATE	DESCRIPTION	BY

DBC WASTEWATER INTERCEPTOR
CIVIL INFRASTRUCTURE
GEORGETOWN, TEXAS, 78633

EROSION CONTROL SHEET 1 OF 2

STATE OF TEXAS
JACOB W. VALENTIEN
124993
LICENSED
PROFESSIONAL ENGINEER

THE SEAL APPEARING ON THIS DOCUMENT WAS AUTHORIZED BY SUPERVISION OF JACOB W. VALENTIEN, P.E. 124993 ON 3/1/2024. ALTERATION OF A SEALED DOCUMENT WITHOUT PROPER NOTIFICATION TO THE RESPONSIBLE ENGINEER IS AN OFFENSE UNDER THE TEXAS ENGINEERING PRACTICE ACT.

DESIGN	DRAWN	DATE
JWV	SAG	MAR 2024

SHEET NO.
7
7 OF 66

TGLASPER
3/1/2024 10:19 AM
M:\DWG-46\4670-22.676\DWG\CIVIL C3D 2018\02_SHEETS\EROS\4670-22.676_EROS.DWG

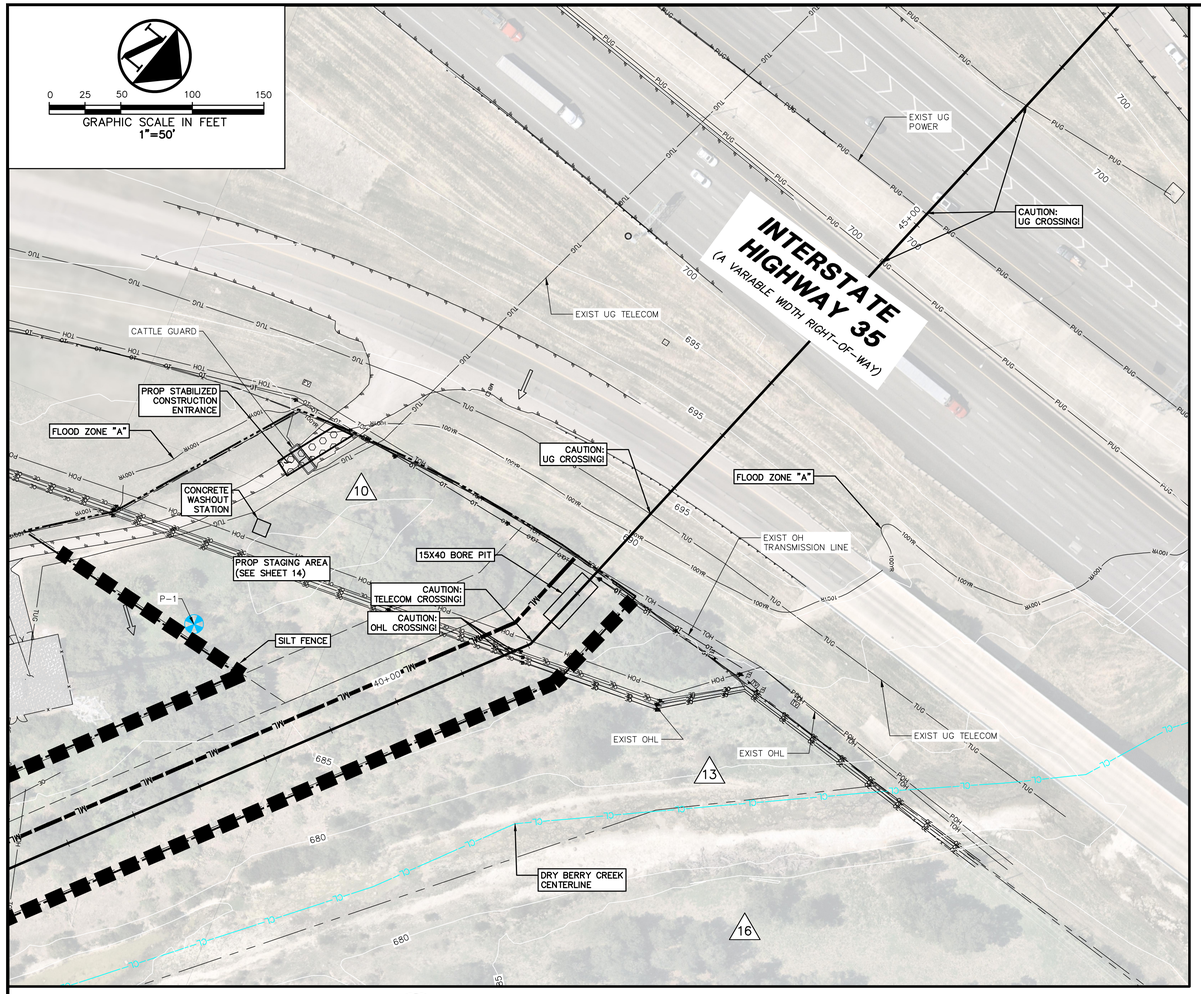

1 EROSION CONTROL DETAIL 1
1" = 50'

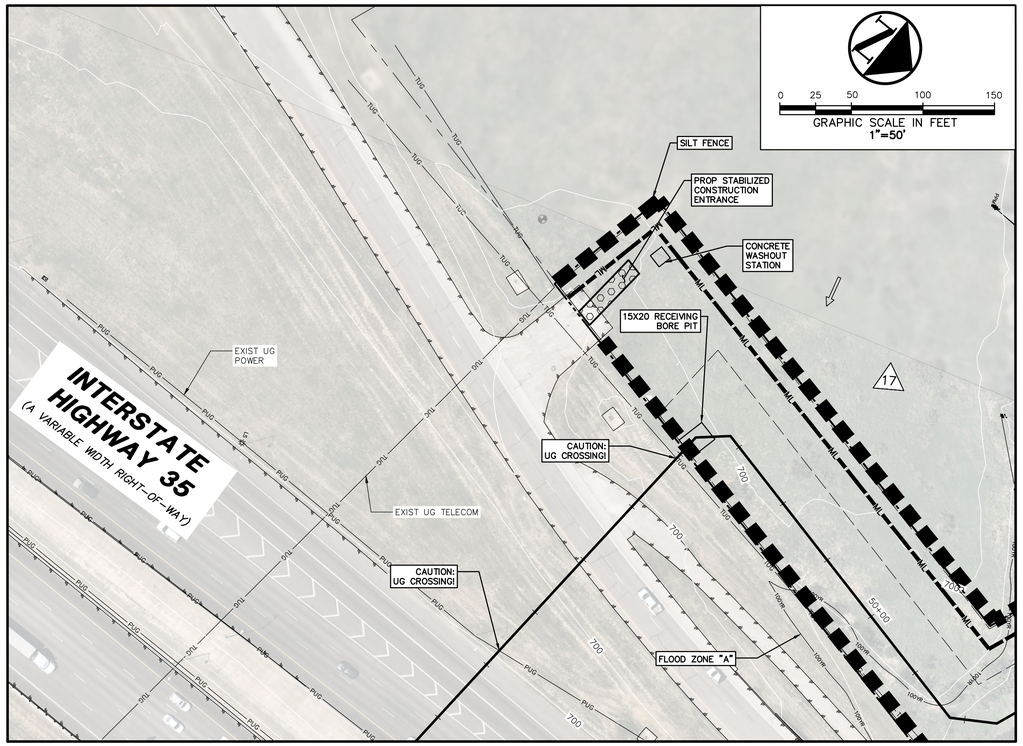

2 EROSION DETAIL DETAIL 2
1" = 50'

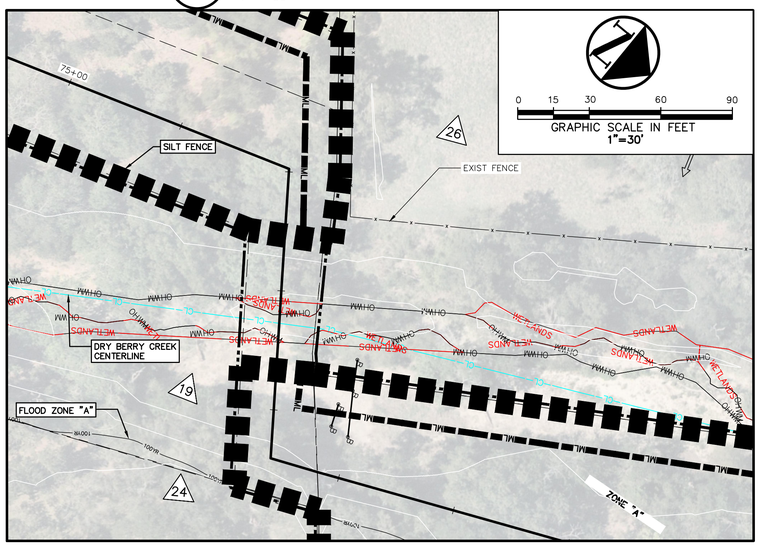

3 EROSION DETAIL DETAIL 3
1" = 30'

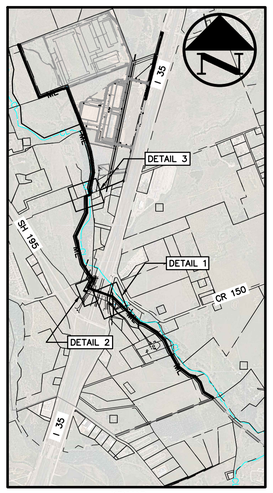

KEYMAP
1" = 2000'

NOTES:

1. REFER TO OVERALL PROJECT LAYOUT FOR PROPERTY TABLE

Westwood

Phone (512) 485-0831
Toll Free (888) 937-5150
8701 N. Mopac Expy, Suite 320
Austin, TX 78759
westwoodps.com

Westwood Professional Services, Inc.
TBPE FIRM REGISTRATION NO. F-11756
TBPLS FIRM REGISTRATION NO. LS-10074301

REVISIONS

NO.	DATE	DESCRIPTION	BY

DBC WASTEWATER INTERCEPTOR
CIVIL INFRASTRUCTURE
GEORGETOWN, TEXAS, 78633

EROSION CONTROL SHEET 2 OF 2

STATE OF TEXAS
JACOB W. VALENTIEN
124993
LICENSED
PROFESSIONAL ENGINEER

THE SEAL APPEARING ON THIS DOCUMENT WAS AUTHORIZED BY SUPERVISION OF JACOB W. VALENTIEN, P.E. 124993 ON 3/1/2024. ALTERATION OF A SEALED DOCUMENT WITHOUT PROPER NOTIFICATION TO THE RESPONSIBLE ENGINEER IS AN OFFENSE UNDER THE TEXAS ENGINEERING PRACTICE ACT.

DESIGN	DRAWN	DATE
JWV	SAG	MAR 2024

SHEET NO.
8
8 OF 66

TGLASPER
3/1/2024 10:20 AM
M:\DWG-46\4670-22.676\DWG\CIVIL CSD 2018\02_SHEETS\EROS\4670-22.676_EROS.DWG

PK-4670-22.676_EROS.DWG

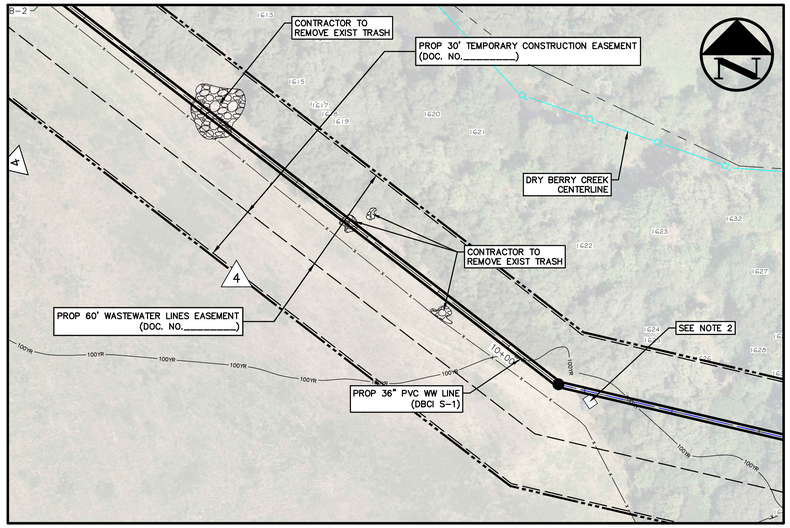

1 DEMOLITION DETAIL 1

1" = 40'

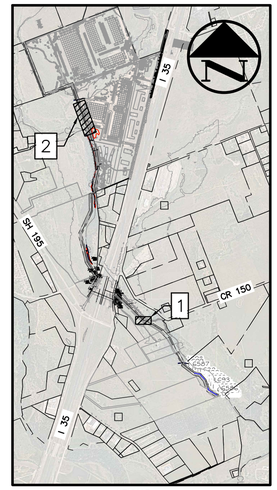

KEYMAP
1" = 2000'

REFERENCE FUTURE LANDSCAPE PLANS FOR TREE REMOVAL AND PROTECTION

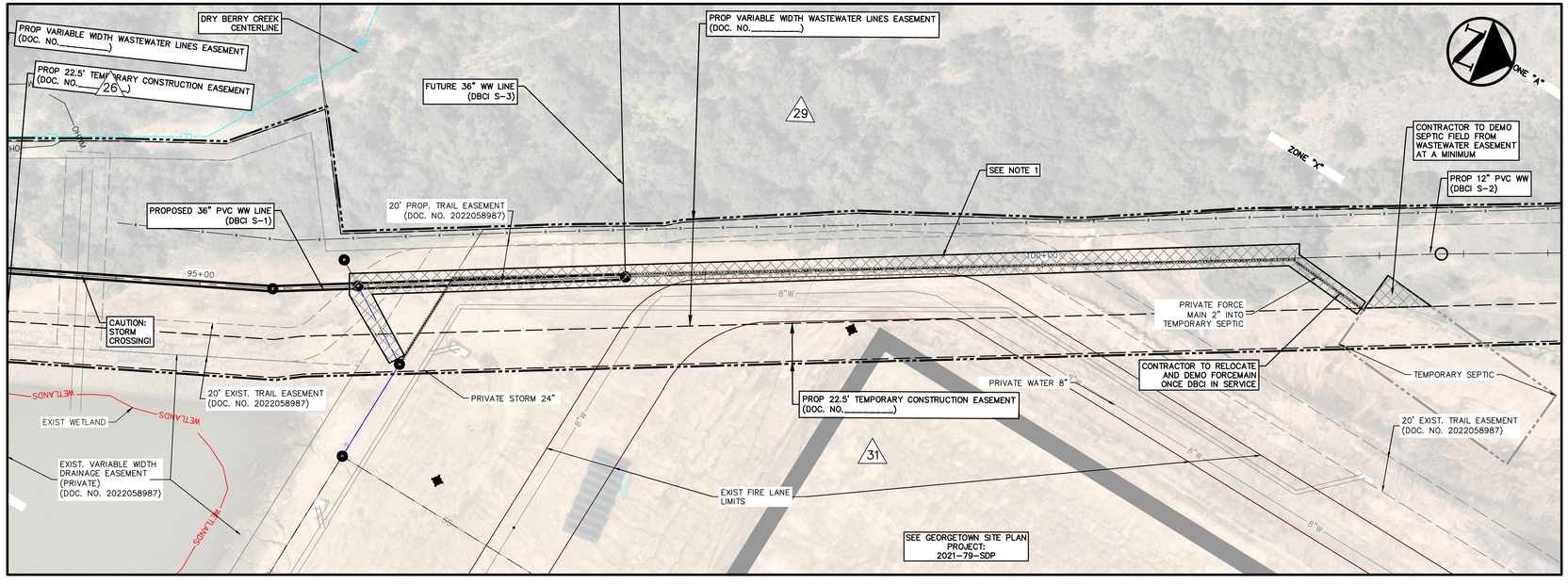

2 DEMOLITION DETAIL 2

1" = 40'

NOTE:

1. EXISTING PAVEMENT TO BE REMOVED AND REPLACED IS 7" CONCRETE WITH NO. 3 BARS AT 18" O.C. (CLASS "P1", 3500 PSI) HEAVY DUTY.
2. CONTRACTOR TO CORRDINATE WITH LANDOWNER FOR REMOVAL AND/OR RELOCATION OF DEBRIS.

Westwood
Phone (512) 485-0831
Toll Free (888) 937-5150
8701 N. Mopac Expy, Suite 320
Austin, TX 78759
westwoodps.com
Westwood Professional Services, Inc.
TBPE FIRM REGISTRATION NO. F-11756
TBPLS FIRM REGISTRATION NO. LS-10074301

REVISIONS

NO.	DESCRIPTION	DATE	BY

DBC WASTEWATER INTERCEPTOR
CIVIL INFRASTRUCTURE
GEORGETOWN, TEXAS, 78633

DEMOLITION PLAN

STATE OF TEXAS
JACOB W. VALENTIEN
124993
LICENSED
PROFESSIONAL ENGINEER

THE SEAL APPEARING ON THIS DOCUMENT WAS AUTHORIZED BY SUPERVISION OF JACOB W. VALENTIEN, P.E. 124993 ON 3/1/2024. ALTERATION OF A SEALED DOCUMENT WITHOUT PROPER NOTIFICATION TO THE RESPONSIBLE ENGINEER IS AN OFFENSE UNDER THE TEXAS ENGINEERING PRACTICE ACT.

DESIGN	DRAWN	DATE
JWV	SAG	MAR 2024

SHEET NO.
9

PK-4670-22.676_DEMO.DWG

TGLASPER
3/1/2024 11:53 AM
M:\DWG-46\4670-22.676\DWG\CIVIL C3D 2018\02_SHEETS\DEMO\4670-22.676_DEMO.DWG

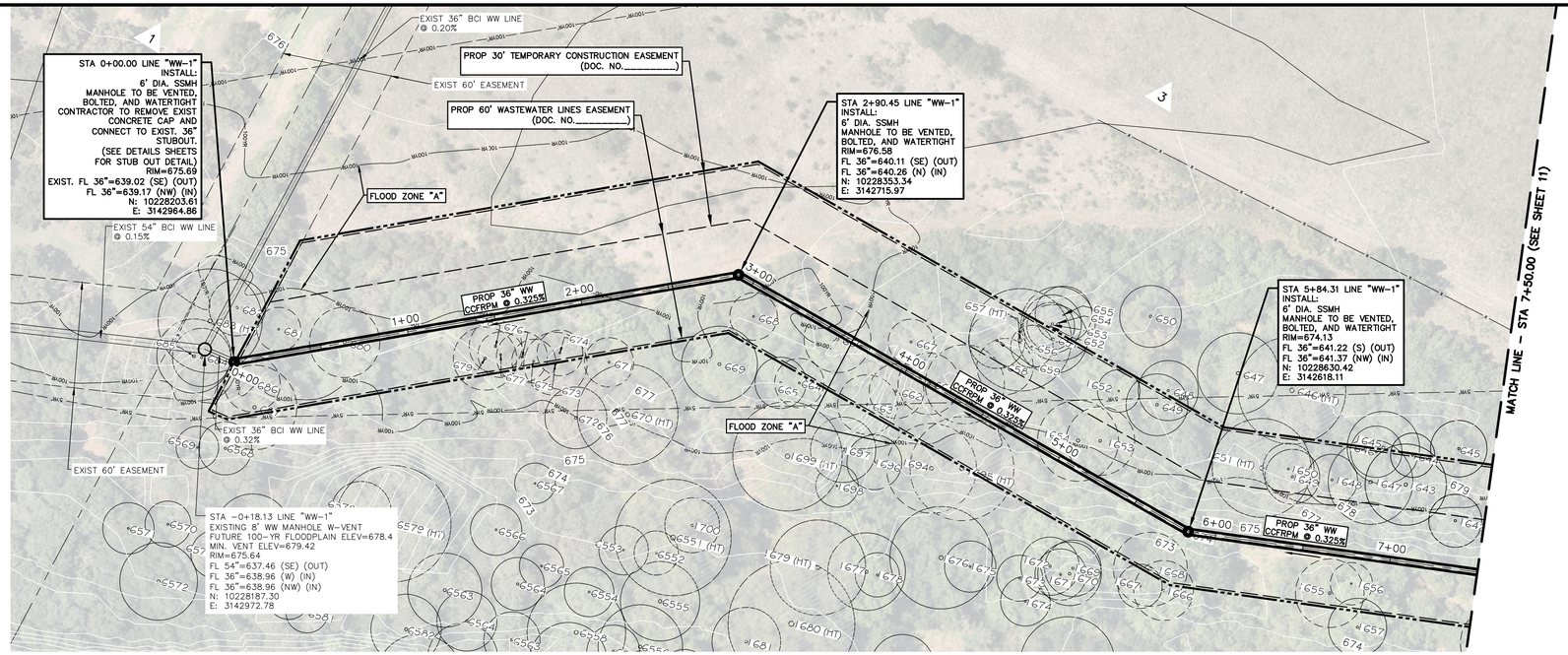

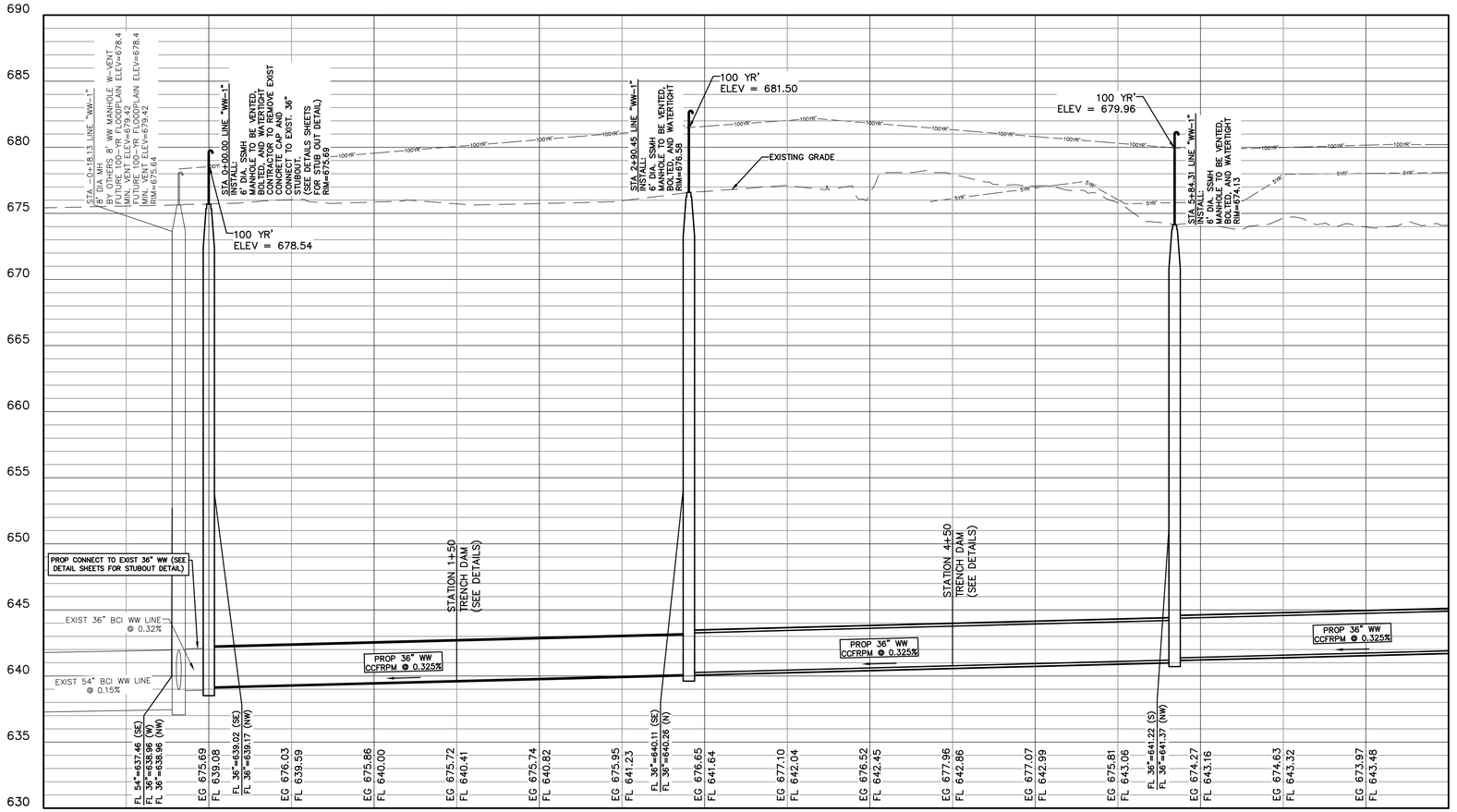

PROFILE: WW-1

LOCATION OF BORE LOG B-1

0 4 8 12
VERTICAL SCALE IN FEET
V: 1"=4'
0 20 40 80 120
HORIZONTAL SCALE IN FEET
1"=40'

NOTES:

1. MANHOLE INVERT DETAILS AND DRY BERRY CREEK CENTERLINE SECTION CUTS ARE ON THE DETAIL SHEETS.
2. MANHOLES CONTAINED WITHIN THE 100 YEAR' FLOODPLAIN TO BE VENTED 1' ABOVE FLOOD ELEVATION.
3. TREES WITHIN THE TEMPORARY CONSTRUCTION EASEMENT ARE AT CONTRACTORS DISCRETION FOR REMOVAL AND SHOULD BE PROTECTED IF AT ALL POSSIBLE.
4. ACCEPTABLE PIPE MATERIALS INCLUDE CENTRIFUGALLY CAST FIBERGLASS-REINFORCED POLYMER MORTAR AS MANUFACTURED BY HOBAS.
5. CONTRACTOR SHALL RESTORE ALL DISTURBED AREAS TO EXISTING CONDITIONS INCLUDING REESTABLISHMENT OF VEGETATION AND TO REESTABLISH DRAINAGE PATTERNS.
6. IN THE EVENT THAT THE CONTRACTOR ENCOUNTERS UNSTABLE OR UNSUITABLE SOILS, THEN BACKFILL SHALL BE PER THE GEOTECHNICAL REPORT AND PER THE UNSUITABLE SOIL DETAIL.

Westwood
Phone (512) 485-0831
Toll Free (888) 937-5150
8701 N. Mopac Expy, Suite 320
Austin, TX 78759
westwoodps.com
Westwood Professional Services, Inc.
TBPE FIRM REGISTRATION NO. F-11756
TBPLS FIRM REGISTRATION NO. LS-10074301

REVISIONS

NO.	DATE	DESCRIPTION	BY

DBC WASTEWATER INTERCEPTOR
CIVIL INFRASTRUCTURE
GEORGETOWN, TEXAS, 78633
PROP WASTEWATER LINE PLAN & PROFILE SHEET 1 OF 17

STATE OF TEXAS
JACOB W. VALENTIEN
124993
LICENSED
PROFESSIONAL ENGINEER

THE SEAL APPEARING ON THIS DOCUMENT WAS AUTHORIZED BY SUPERVISON OF JACOB W. VALENTIEN, P.E. 124993 ON 3/1/2024. ALTERATION OF A SEALED DOCUMENT WITHOUT PROPER NOTIFICATION TO THE RESPONSIBLE ENGINEER IS AN OFFENSE UNDER THE TEXAS ENGINEERING PRACTICE ACT.

DESIGN	DRAWN	DATE
JWV	SAG	MAR 2024

SHEET NO. **10**

10 OF 66

TGLASPER
3/1/2024 5:44 PM
M:\DWG-46\4670-22.676\DWG\CIVIL C3D 2018\02_SHEETS\PLAN & PROFILES\4670-22.676_PLAN_PROFILES.DWG

PK-4670-22.676_PLAN_PROFILES.DWG

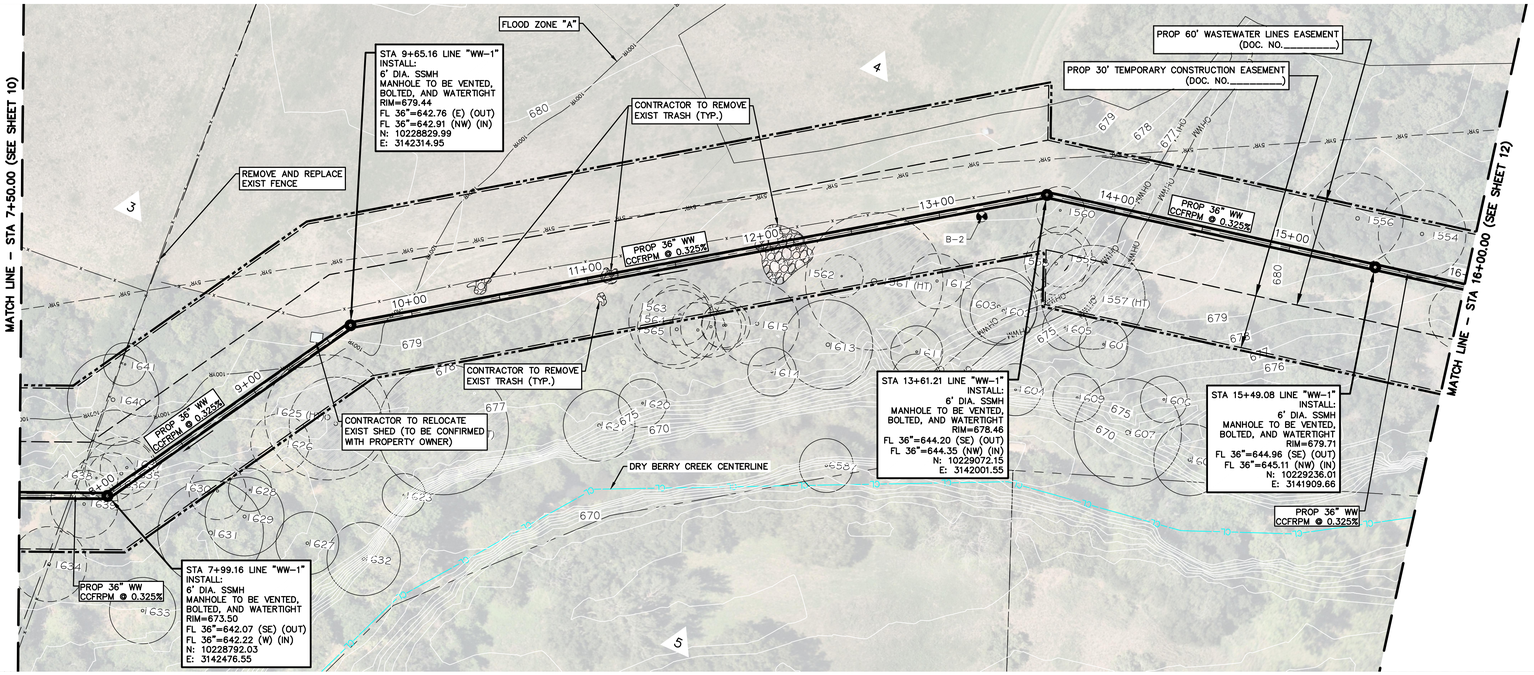

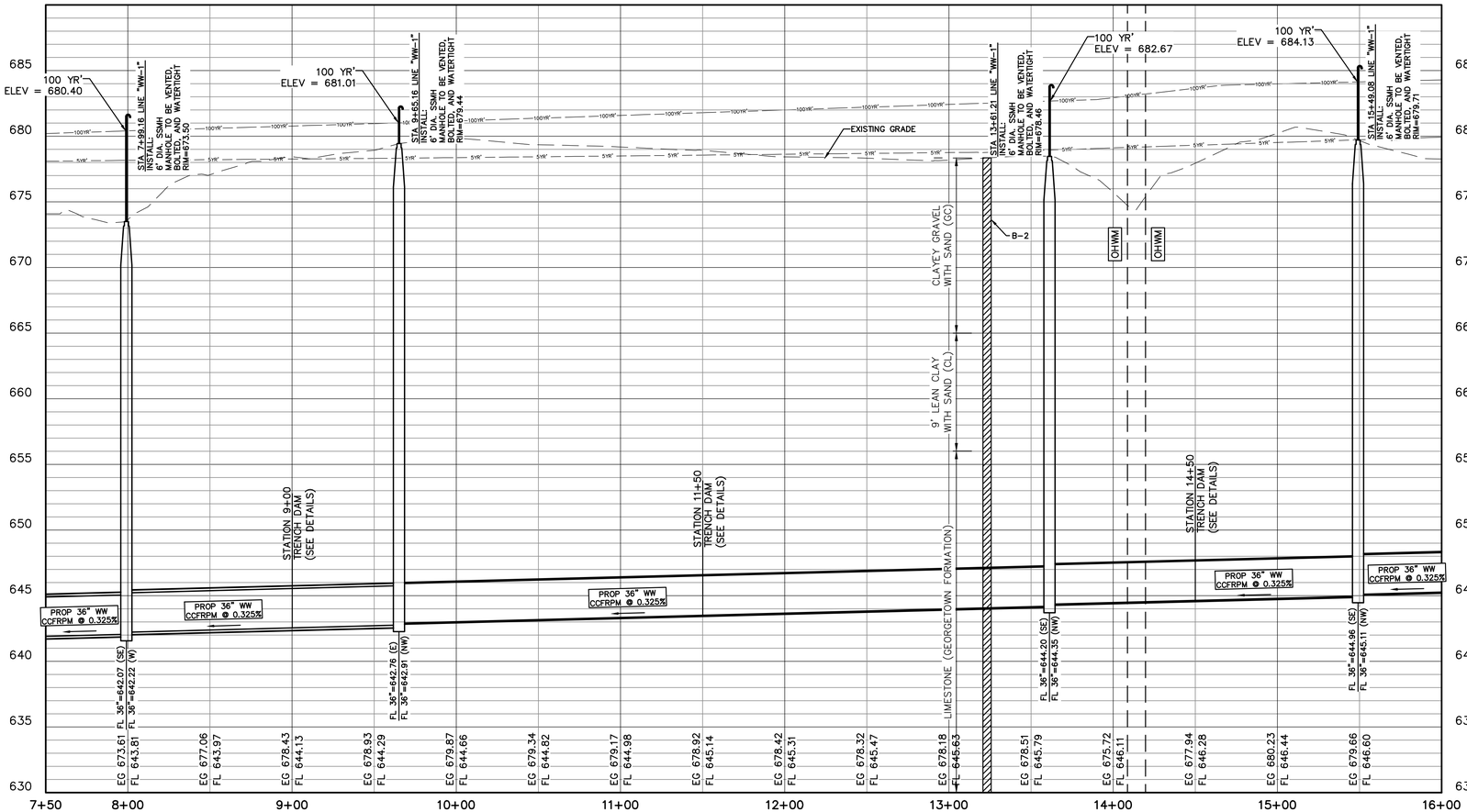

PROFILE: WW-1

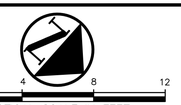

NOTES:

1. MANHOLE INVERT DETAILS AND DRY BERRY CREEK CENTERLINE SECTION CUTS ARE ON THE DETAIL SHEETS.
2. MANHOLES CONTAINED WITHIN THE 100 YEAR' FLOODPLAIN TO BE VENTED 1' ABOVE FLOOD ELEVATION.
3. TREES WITHIN THE TEMPORARY CONSTRUCTION EASEMENT ARE AT CONTRACTORS DISCRETION FOR REMOVAL AND SHOULD BE PROTECTED IF AT ALL POSSIBLE.
4. ACCEPTABLE PIPE MATERIALS INCLUDE CENTRIFUGALLY CAST FIBERGLASS–REINFORCED POLYMER MORTAR AS MANUFACTURED BY HOBAS.
5. CONTRACTOR SHALL RESTORE ALL DISTURBED AREAS TO EXISTING CONDITIONS INCLUDING REESTABLISHMENT OF VEGETATION AND TO REESTABLISH DRAINAGE PATTERNS.
6. IN THE EVENT THAT THE CONTRACTOR ENCOUNTERS UNSTABLE OR UNSUITABLE SOILS, THEN BACKFILL SHALL BE PER THE GEOTECHNICAL REPORT AND PER THE UNSUITABLE SOIL DETAIL.

Westwood
Phone (512) 485-0831
Toll Free (888) 937-5150
8701 N. Mopac Expy, Suite 320
Austin, TX 78759
westwoodps.com
Westwood Professional Services, Inc.
TBPE FIRM REGISTRATION NO. F-11756
TBPLS FIRM REGISTRATION NO. LS-10074301

REVISIONS

NO.	DATE	DESCRIPTION	BY

DBC WASTEWATER INTERCEPTOR
CIVIL INFRASTRUCTURE
GEORGETOWN, TEXAS, 78633
PROP WASTEWATER LINE PLAN & PROFILE SHEET 2 OF 17

STATE OF TEXAS
JACOB W. VALENTIEN
124993
LICENSED
PROFESSIONAL ENGINEER

THE SEAL APPEARING ON THIS DOCUMENT WAS AUTHORIZED BY SUPERVISION OF JACOB W. VALENTIEN, P.E. 124993 ON 3/1/2024. ALTERATION OF A SEALED DOCUMENT WITHOUT PROPER NOTIFICATION TO THE RESPONSIBLE ENGINEER IS AN OFFENSE UNDER THE TEXAS ENGINEERING PRACTICE ACT.

DESIGN	DRAWN	DATE
JWV	SAG	MAR 2024

SHEET NO.
11
11 OF 66

TGLASPER
3/1/2024 5:45 PM
M:\DWG-46\4670-22.676\UWK\CIVIL C3D 2018\02_SHEETS\PLAN & PROFILES\4670-22.676_PLAN_PROFILES.DWG

PK–4670–22.676_PLAN_PROFILES.DWG

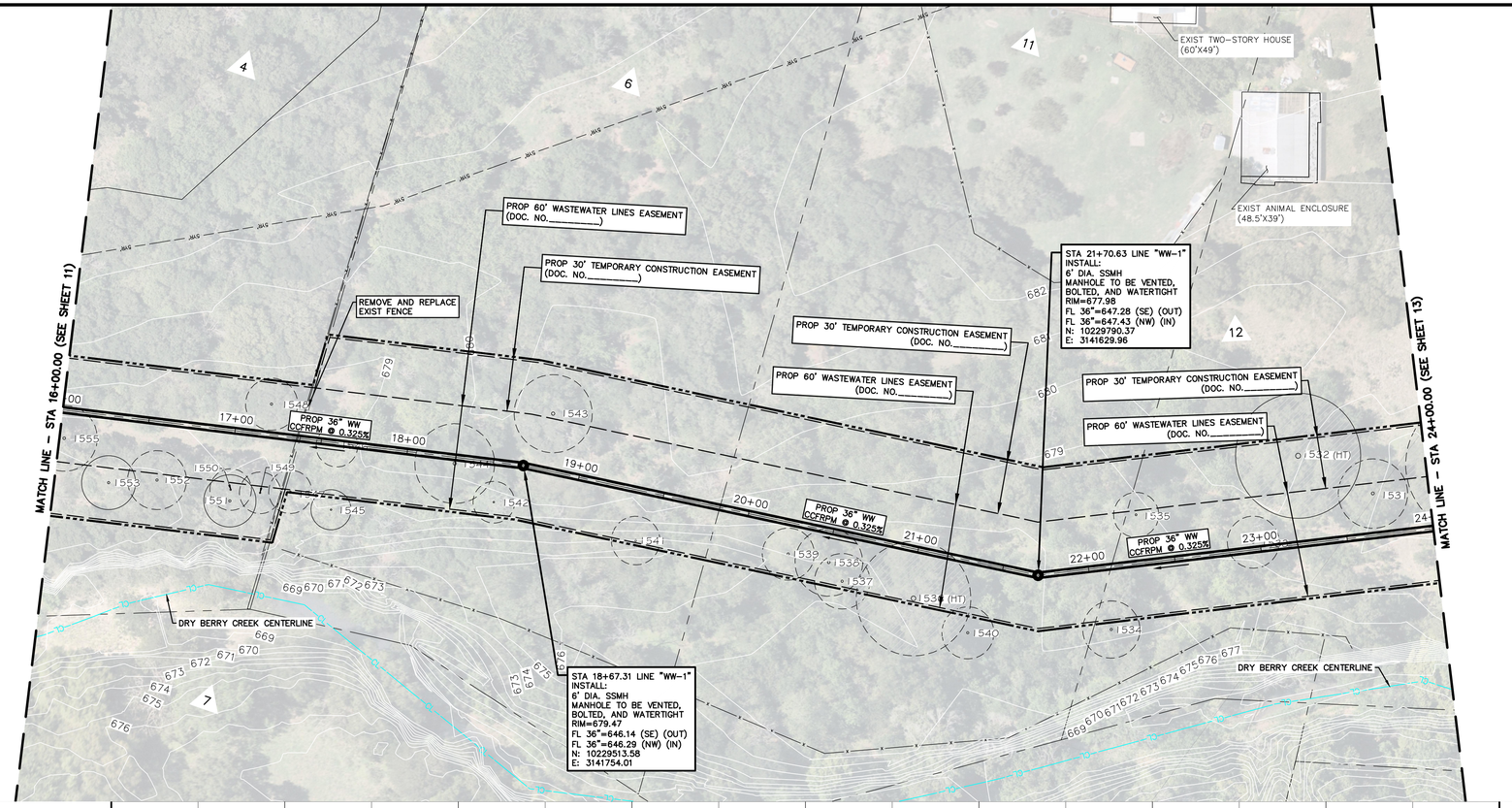

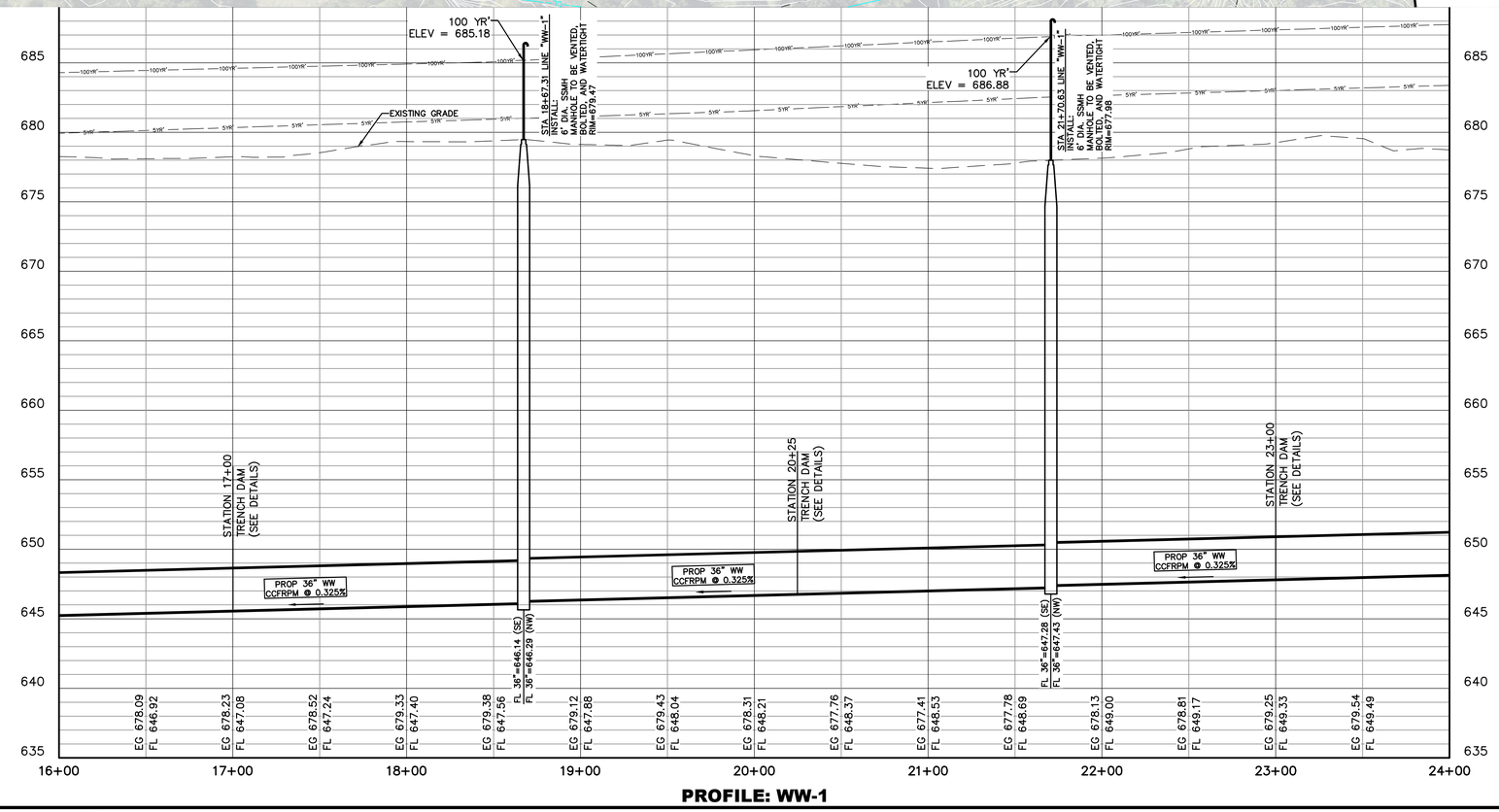

PROFILE: WW-1

0 4 8 12
VERTICAL SCALE IN FEET
V: 1"=4'
0 20 40 80 120
HORIZONTAL SCALE IN FEET
1"=40'

NOTES:

1. MANHOLE INVERT DETAILS AND DRY BERRY CREEK CENTERLINE SECTION CUTS ARE ON THE DETAIL SHEETS.
2. MANHOLES CONTAINED WITHIN THE 100 YEAR' FLOODPLAIN TO BE VENTED 1' ABOVE FLOOD ELEVATION.
3. TREES WITHIN THE TEMPORARY CONSTRUCTION EASEMENT ARE AT CONTRACTORS DISCRETION FOR REMOVAL AND SHOULD BE PROTECTED IF AT ALL POSSIBLE.
4. ACCEPTABLE PIPE MATERIALS INCLUDE CENTRIFUGALLY CAST FIBERGLASS-REINFORCED POLYMER MORTAR AS MANUFACTURED BY HOBAS.
5. CONTRACTOR SHALL RESTORE ALL DISTURBED AREAS TO EXISTING CONDITIONS INCLUDING REESTABLISHMENT OF VEGETATION AND TO REESTABLISH DRAINAGE PATTERNS.
6. IN THE EVENT THAT THE CONTRACTOR ENCOUNTERS UNSTABLE OR UNSUITABLE SOILS, THEN BACKFILL SHALL BE PER THE GEOTECHNICAL REPORT AND PER THE UNSUITABLE SOIL DETAIL.

Westwood
Phone (512) 485-0831
Toll Free (888) 937-5150
8701 N. Mopac Expy, Suite 320
Austin, TX 78759
westwoodps.com
Westwood Professional Services, Inc.
TBPE FIRM REGISTRATION NO. F-11756
TBPLS FIRM REGISTRATION NO. LS-10074301

REVISIONS

NO.	DESCRIPTION	DATE	BY

DBC WASTEWATER INTERCEPTOR
CIVIL INFRASTRUCTURE
GEORGETOWN, TEXAS, 78633
PROP WASTEWATER LINE PLAN & PROFILE SHEET 3 OF 17

STATE OF TEXAS
JACOB W. VALENTIEN
124993
LICENSED
PROFESSIONAL ENGINEER

THE SEAL APPEARING ON THIS DOCUMENT WAS AUTHORIZED BY SUPERVISION OF JACOB W. VALENTIEN, P.E. 124993 ON 3/1/2024. ALTERATION OF A SEALED DOCUMENT WITHOUT PROPER NOTIFICATION TO THE RESPONSIBLE ENGINEER IS AN OFFENSE UNDER THE TEXAS ENGINEERING PRACTICE ACT.

DESIGN	DRAWN	DATE
JWV	SAG	MAR 2024

SHEET NO.
12
12 OF 66

TGLASPER
3/1/2024 5:45 PM
M:\DWG-46\4670-22.676\DWG\CIVIL C3D 2018\02_SHEETS\PLAN & PROFILES\4670-22.676_PLAN_PROFILES.DWG

PK-4670-22.676_PLAN_PROFILES.DWG

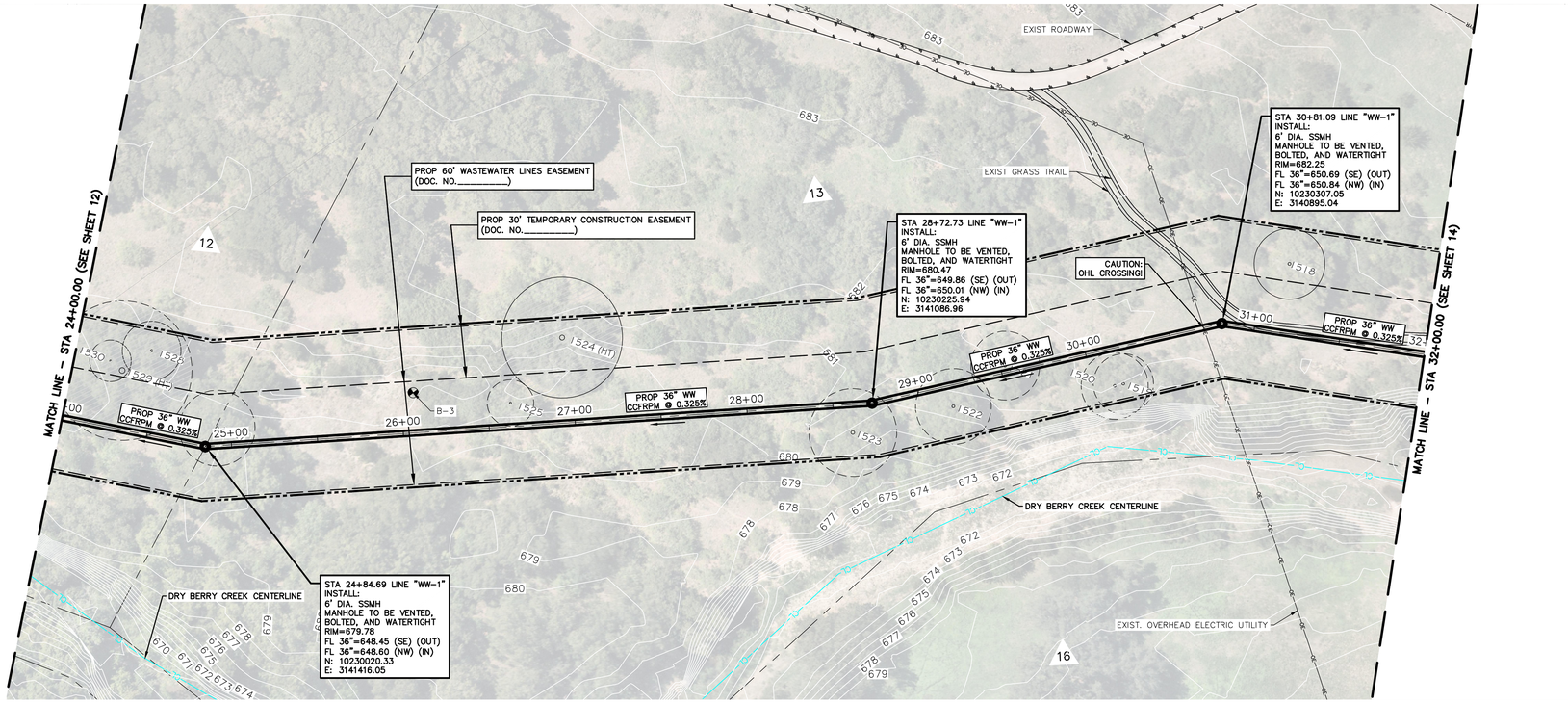

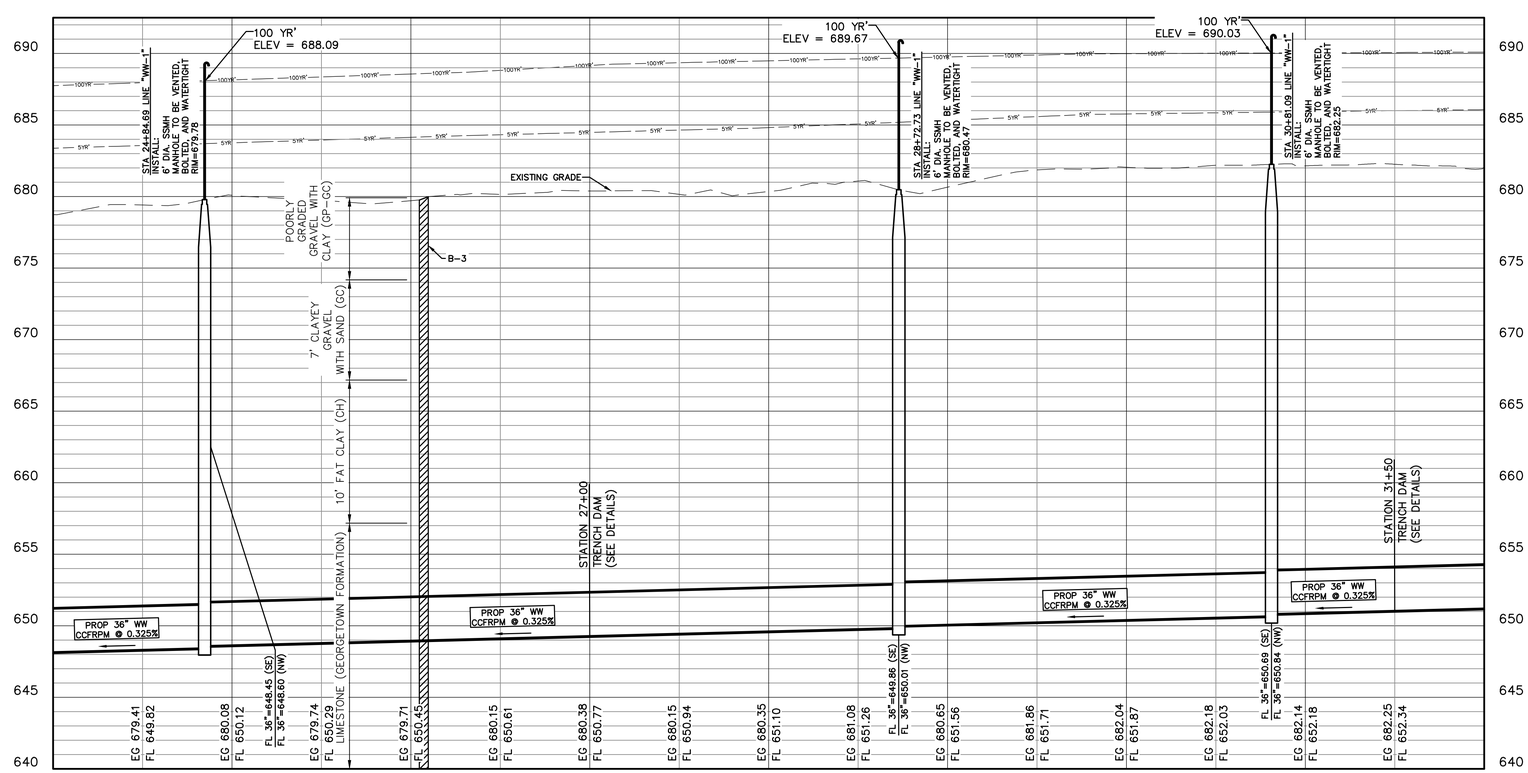

PROFILE: WW-1

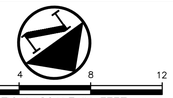

NOTES:

1. MANHOLE INVERT DETAILS AND DRY BERRY CREEK CENTERLINE SECTION CUTS ARE ON THE DETAIL SHEETS.
2. MANHOLES CONTAINED WITHIN THE 100 YEAR' FLOODPLAIN TO BE VENTED 1' ABOVE FLOOD ELEVATION.
3. TREES WITHIN THE TEMPORARY CONSTRUCTION EASEMENT ARE AT CONTRACTORS DISCRETION FOR REMOVAL AND SHOULD BE PROTECTED IF AT ALL POSSIBLE.
4. ACCEPTABLE PIPE MATERIALS INCLUDE CENTRIFUGALLY CAST FIBERGLASS-REINFORCED POLYMER MORTAR AS MANUFACTURED BY HOBAS.
5. CONTRACTOR SHALL RESTORE ALL DISTURBED AREAS TO EXISTING CONDITIONS INCLUDING REESTABLISHMENT OF VEGETATION AND TO REESTABLISH DRAINAGE PATTERNS.
6. IN THE EVENT THAT THE CONTRACTOR ENCOUNTERS UNSTABLE OR UNSUITABLE SOILS, THEN BACKFILL SHALL BE PER THE GEOTECHNICAL REPORT AND PER THE UNSUITABLE SOIL DETAIL.

Westwood
Phone (512) 485-0831
Toll Free (888) 937-5150
8701 N. Mopac Expy, Suite 320
Austin, TX 78759
westwoodps.com
Westwood Professional Services, Inc.
TBPE FIRM REGISTRATION NO. F-11756
TBPLS FIRM REGISTRATION NO. LS-10074301

REVISIONS

NO.	DATE	DESCRIPTION	BY

DBC WASTEWATER INTERCEPTOR
CIVIL INFRASTRUCTURE
GEORGETOWN, TEXAS, 78633
PROP WASTEWATER LINE PLAN & PROFILE SHEET 4 OF 17

STATE OF TEXAS
JACOB W. VALENTIEN
124993
LICENSED PROFESSIONAL ENGINEER

THE SEAL APPEARING ON THIS DOCUMENT WAS AUTHORIZED BY SUPERVISION OF JACOB W. VALENTIEN, P.E. 124993 ON 3/1/2024. ALTERATION OF A SEALED DOCUMENT WITHOUT PROPER NOTIFICATION TO THE RESPONSIBLE ENGINEER IS AN OFFENSE UNDER THE TEXAS ENGINEERING PRACTICE ACT.

DESIGN	DRAWN	DATE
JWV	SAG	MAR 2024

SHEET NO.
13
13 OF 66

TGLASPER
3/1/2024 5:45 PM
M:\DWG-46\4670-22.676\DWG\CIVIL C3D 2018\02_SHEETS\PLAN & PROFILES\4670-22.676_PLAN_PROFILES.DWG

PK-4670-22.676_PLAN_PROFILES.DWG

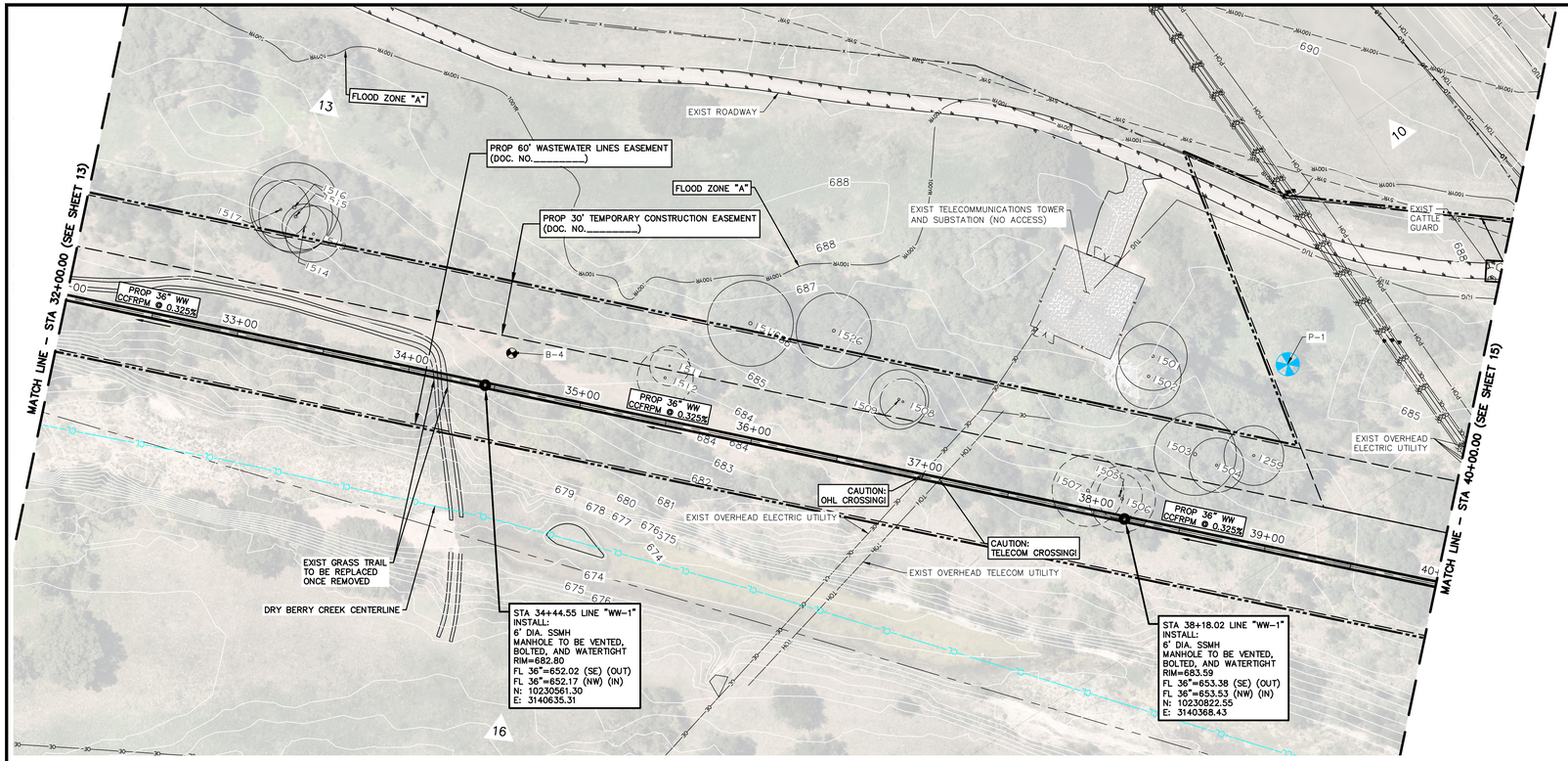

0 4 8 12
VERTICAL SCALE IN FEET
V: 1"=4'
0 20 40 80 120
HORIZONTAL SCALE IN FEET
1"=40'

NOTES:

1. MANHOLE INVERT DETAILS AND DRY BERRY CREEK CENTERLINE SECTION CUTS ARE ON THE DETAIL SHEETS.
2. MANHOLES CONTAINED WITHIN THE 100 YEAR FLOODPLAIN TO BE VENTED 1' ABOVE FLOOD ELEVATION.
3. TREES WITHIN THE TEMPORARY CONSTRUCTION EASEMENT ARE AT CONTRACTORS DISCRETION FOR REMOVAL AND SHOULD BE PROTECTED IF AT ALL POSSIBLE.
4. ACCEPTABLE PIPE MATERIALS INCLUDE CENTRIFUGALLY CAST FIBERGLASS-REINFORCED POLYMER MORTAR AS MANUFACTURED BY HOBAS.
5. CONTRACTOR SHALL RESTORE ALL DISTURBED AREAS TO EXISTING CONDITIONS INCLUDING REESTABLISHMENT OF VEGETATION AND TO REESTABLISH DRAINAGE PATTERNS.
6. IN THE EVENT THAT THE CONTRACTOR ENCOUNTERS UNSTABLE OR UNSUITABLE SOILS, THEN BACKFILL SHALL BE PER THE GEOTECHNICAL REPORT AND PER THE UNSUITABLE SOIL DETAIL.

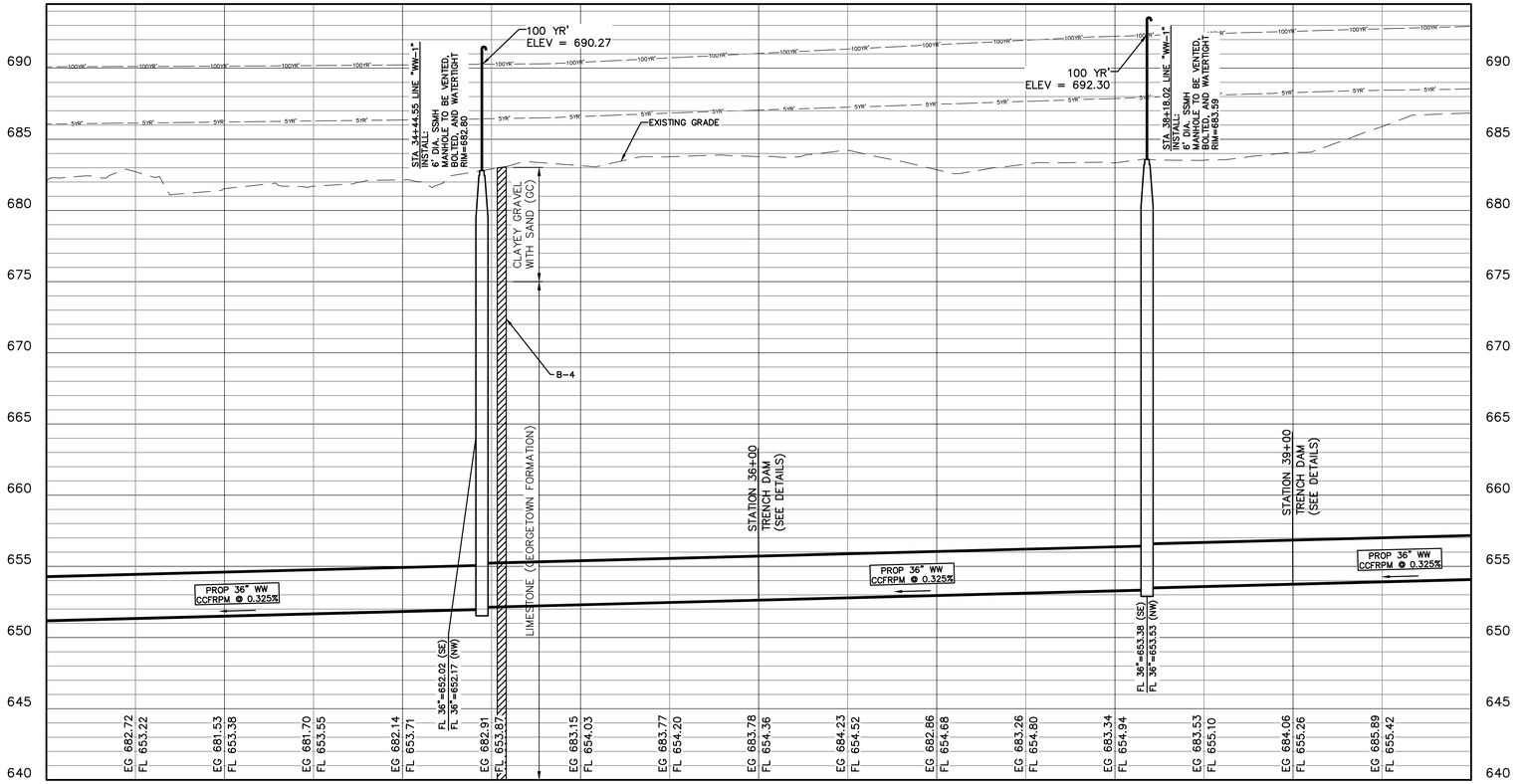

PROFILE: WW-1

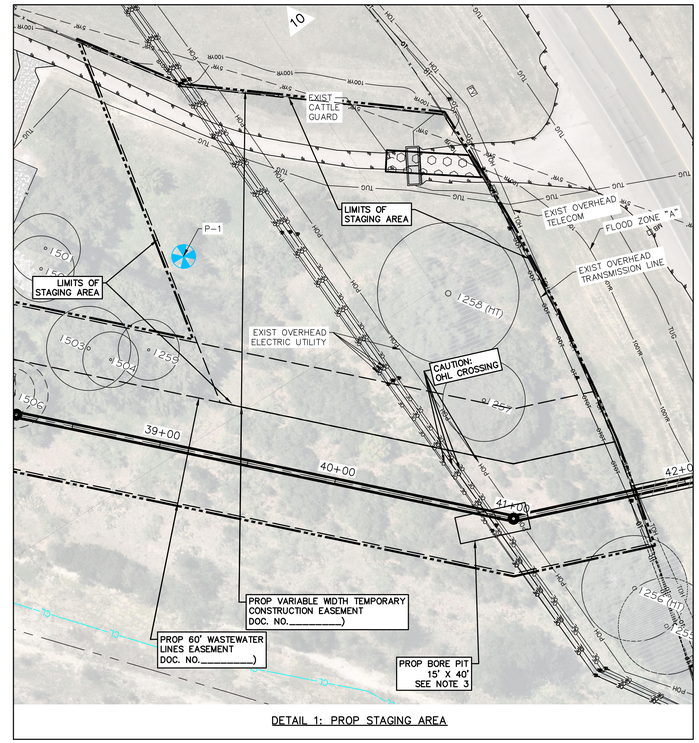

DETAIL 1: PROP STAGING AREA

Westwood
Phone (512) 485-0831
Toll Free (888) 937-5150
8701 N. Mopac Expy, Suite 320
Austin, TX 78759
westwoodps.com
Westwood Professional Services, Inc.
TBPE FIRM REGISTRATION NO. F-11756
TBPLS FIRM REGISTRATION NO. LS-10074301

REVISIONS			
NO.	DATE	DESCRIPTION	BY

DBC WASTEWATER INTERCEPTOR
CIVIL INFRASTRUCTURE
GEORGETOWN, TEXAS, 78633
PROP WASTEWATER LINE PLAN & PROFILE SHEET 5 OF 17

STATE OF TEXAS
JACOB W. VALENTIEN
124993
LICENSED PROFESSIONAL ENGINEER

THE SEAL APPEARING ON THIS DOCUMENT WAS AUTHORIZED BY SUPERVISOR OF JACOB W. VALENTIEN, P.E. 124993 ON 3/1/2024. ALTERATION OF A SEALED DOCUMENT WITHOUT PROPER NOTIFICATION TO THE RESPONSIBLE ENGINEER IS AN OFFENSE UNDER THE TEXAS ENGINEERING PRACTICE ACT.

DESIGN	DRAWN	DATE
JWV	SAG	MAR 2024

SHEET NO.
14
14 OF 66

TGLASPER
3/1/2024, 5:46 PM
M:\DWG-46\4670-22.676\DWG\CIVIL C3D 2018\02_SHEETS\PLAN & PROFILES\4670-22.676_PLAN_PROFILES.DWG

PK-4670-22.676_PLAN_PROFILES.DWG

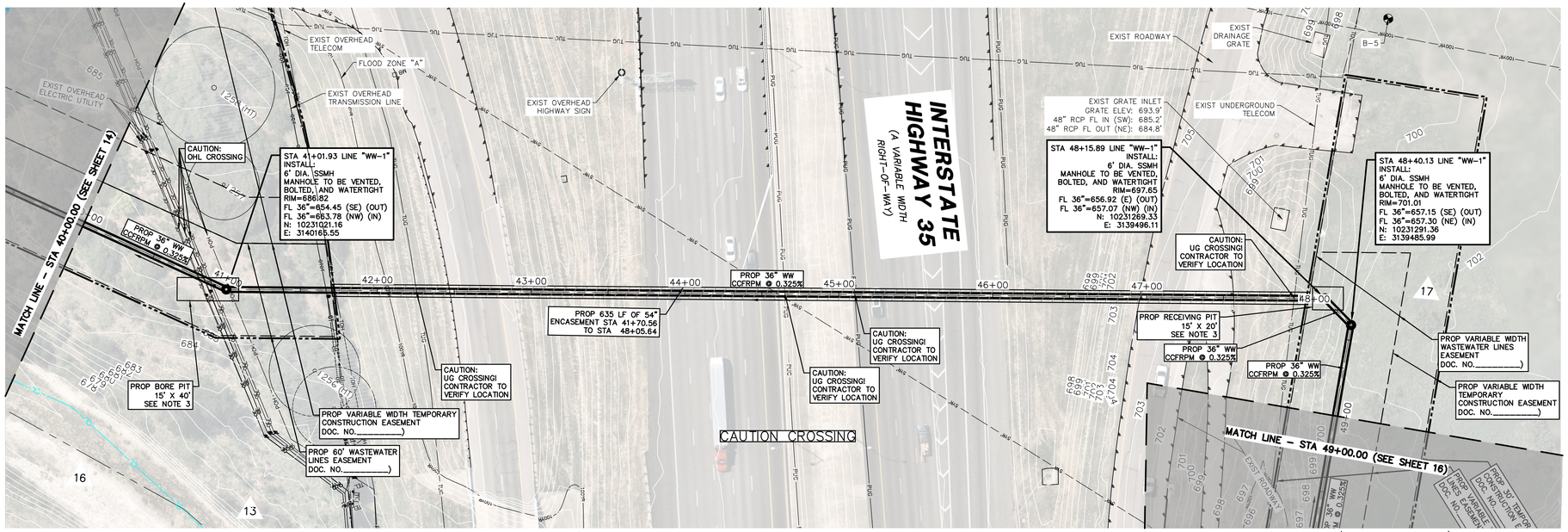

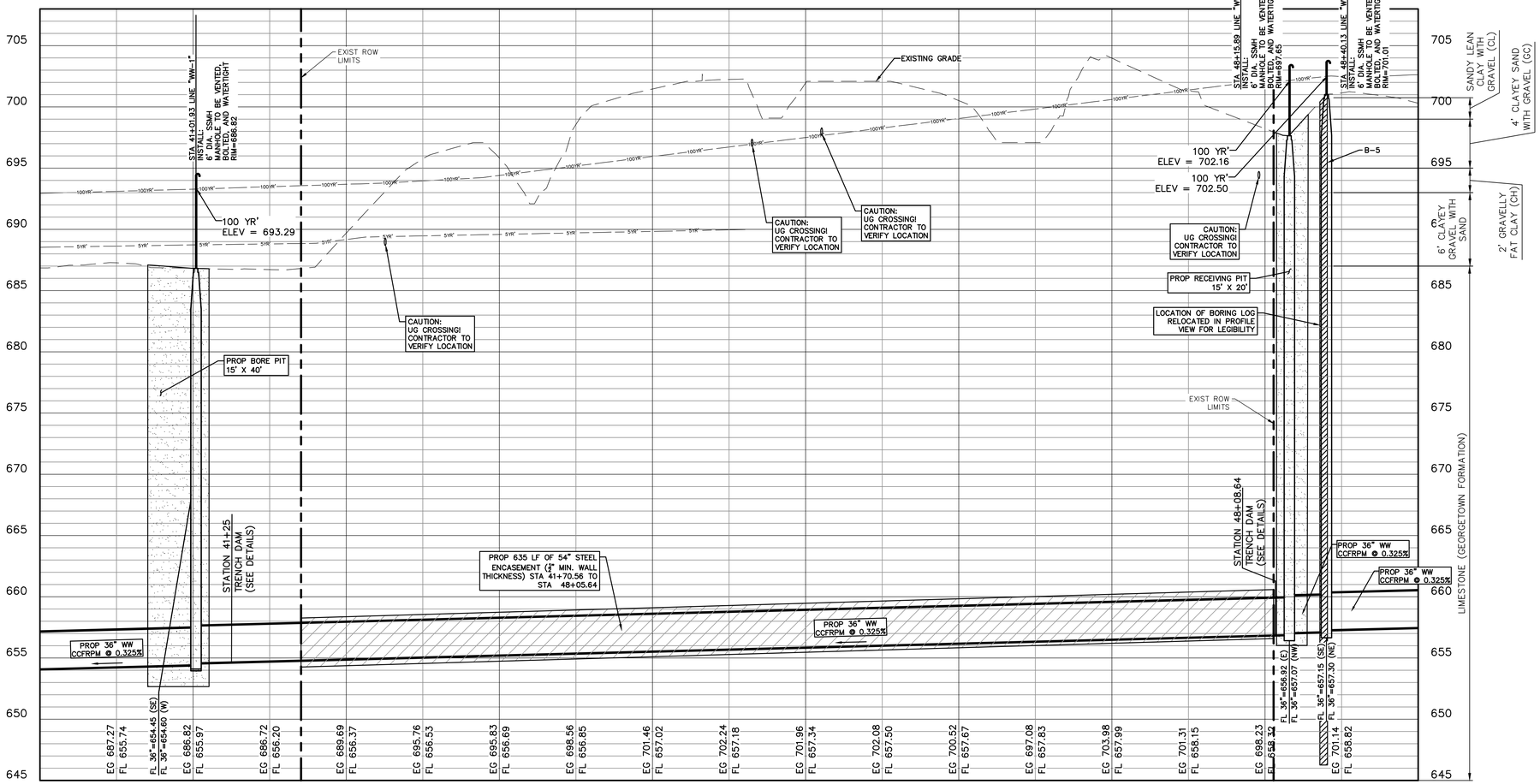

PROFILE: WW-1

0 4 8 12
VERTICAL SCALE IN FEET
V: 1"=4'
0 20 40 80 120
HORIZONTAL SCALE IN FEET
1"=40'

NOTES:

1. MANHOLE INVERT DETAILS AND DRY BERRY CREEK CENTERLINE SECTION CUTS ARE ON THE DETAIL SHEETS.
2. MANHOLES CONTAINED WITHIN THE 100 YEAR' FLOODPLAIN TO BE VENTED 1' ABOVE FLOOD ELEVATION.
3. BORE AND RECEIVING PIT DIMENSIONS SHOWN ARE APPROXIMATE. CONTRACTOR IS RESPONSIBLE FOR THEIR EXACT LOCATIONS AND FOR SELECTING DIMENSIONS TO FACILITATE UTILIZATION OF THEIR MEANS AND METHODS WITHIN THE AVAILABLE EASEMENT SHOWN, WITHOUT CONFLICTING WITH OR IMPACTING UTILITIES. THE CONTRACTOR IS SOLELY RESPONSIBLE FOR THE DESIGN OF THE SUPPORT OF EXCAVATION SYSTEM AND THE CONTROL OF GROUNDWATER FOR EACH PIT IN ACCORDANCE WITH THE CONTRACT SPECIFICATIONS.
4. FOR ALL TRENCHLESS WORK REFER TO NOTES ON SHEET NO. 2.
5. STEEL CASING BENEATH IH-35 MAY BE INSTALLED BY EITHER TUNNEL BORING MACHINE PER SPEC SECTION 33 30 02, MICROTUNNEL BORING MACHINE PER SPEC SECTION 33 30 03, OR HAND TUNNELING PER SPEC SECTION 33 30 04.
6. TREES WITHIN THE TEMPORARY CONSTRUCTION EASEMENT ARE AT CONTRACTORS DISCRETION FOR REMOVAL AND SHOULD BE PROTECTED IF AT ALL POSSIBLE.
7. ACCEPTABLE PIPE MATERIALS INCLUDE CENTRIFUGALLY CAST FIBERGLASS–REINFORCED POLYMER MORTAR AS MANUFACTURED BY HOBAS.
8. CONTRACTOR SHALL RESTORE ALL DISTURBED AREAS TO EXISTING CONDITIONS INCLUDING REESTABLISHMENT OF VEGETATION AND TO REESTABLISH DRAINAGE PATTERNS.
9. IN THE EVENT THAT THE CONTRACTOR ENCOUNTERS UNSTABLE OR UNSUITABLE SOILS, THEN BACKFILL SHALL BE PER THE GEOTECHNICAL REPORT AND PER THE UNSUITABLE SOIL DETAIL.

Westwood
Phone (512) 485-0831
Toll Free (888) 937-5150
8701 N. Mopac Expy, Suite 320
Austin, TX 78759
westwoodps.com
Westwood Professional Services, Inc.
TBPE FIRM REGISTRATION NO. F-11756
TBPLS FIRM REGISTRATION NO. LS-10074301

REVISIONS

NO.	DESCRIPTION	DATE	BY

DBC WASTEWATER INTERCEPTOR
CIVIL INFRASTRUCTURE
GEORGETOWN, TEXAS, 78633
PROP WASTEWATER LINE PLAN & PROFILE SHEET 6 OF 17

STATE OF TEXAS
JACOB W. VALENTIEN
124993
LICENSED PROFESSIONAL ENGINEER

THE SEAL APPEARING ON THIS DOCUMENT WAS AUTHORIZED BY SUPERVISOR OF JACOB W. VALENTIEN, P.E. 124993 ON 3/1/2024. ALTERATION OF A SEALED DOCUMENT WITHOUT PROPER NOTIFICATION TO THE RESPONSIBLE ENGINEER IS AN OFFENSE UNDER THE TEXAS ENGINEERING PRACTICE ACT.

DESIGN	DRAWN	DATE
JWV	SAG	MAR 2024

SHEET NO. **15**

15 OF 66

TGLASPER
3/1/2024 5:46 PM
M:\DWG-46\4670-22.676\DWG\CIVIL C3D 2018\02_SHEETS\PLAN & PROFILES\4670-22.676_PLAN_PROFILES.DWG

PK–4670–22.676_PLAN_PROFILES.DWG

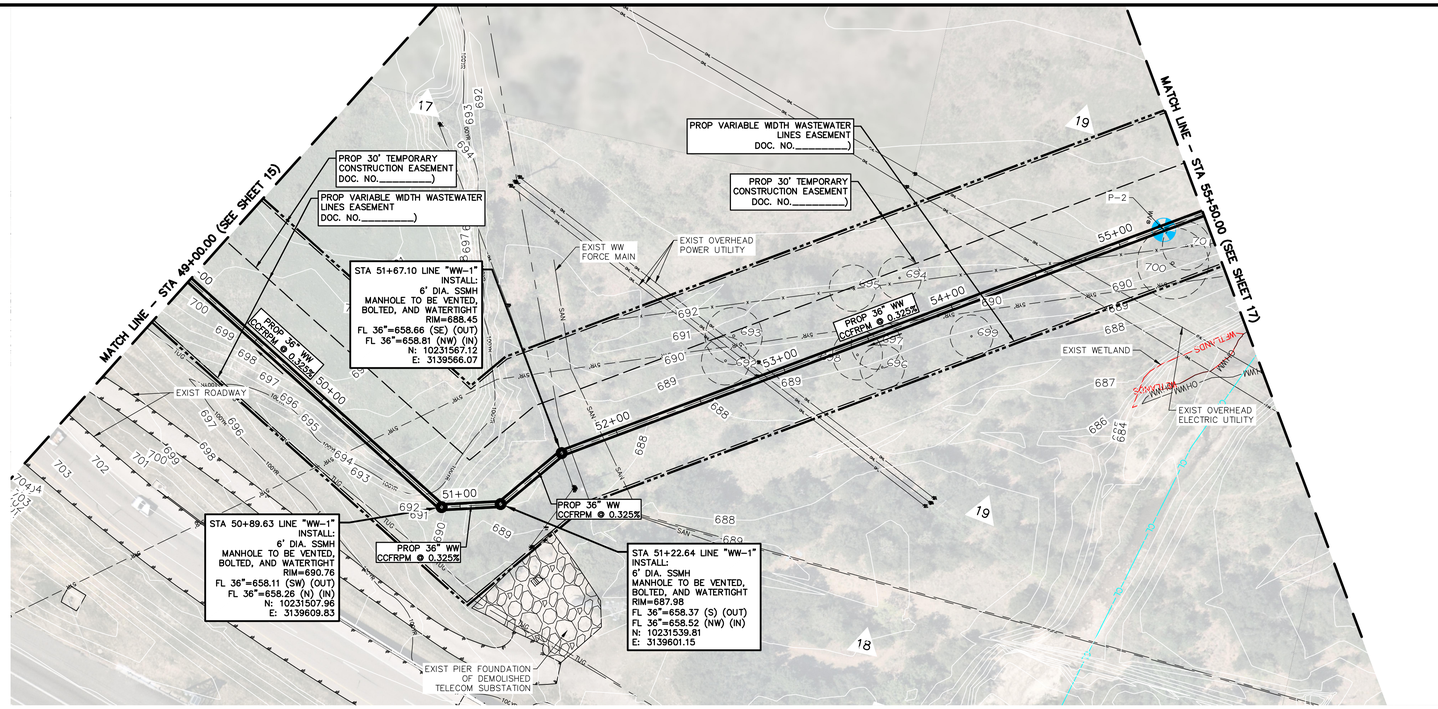

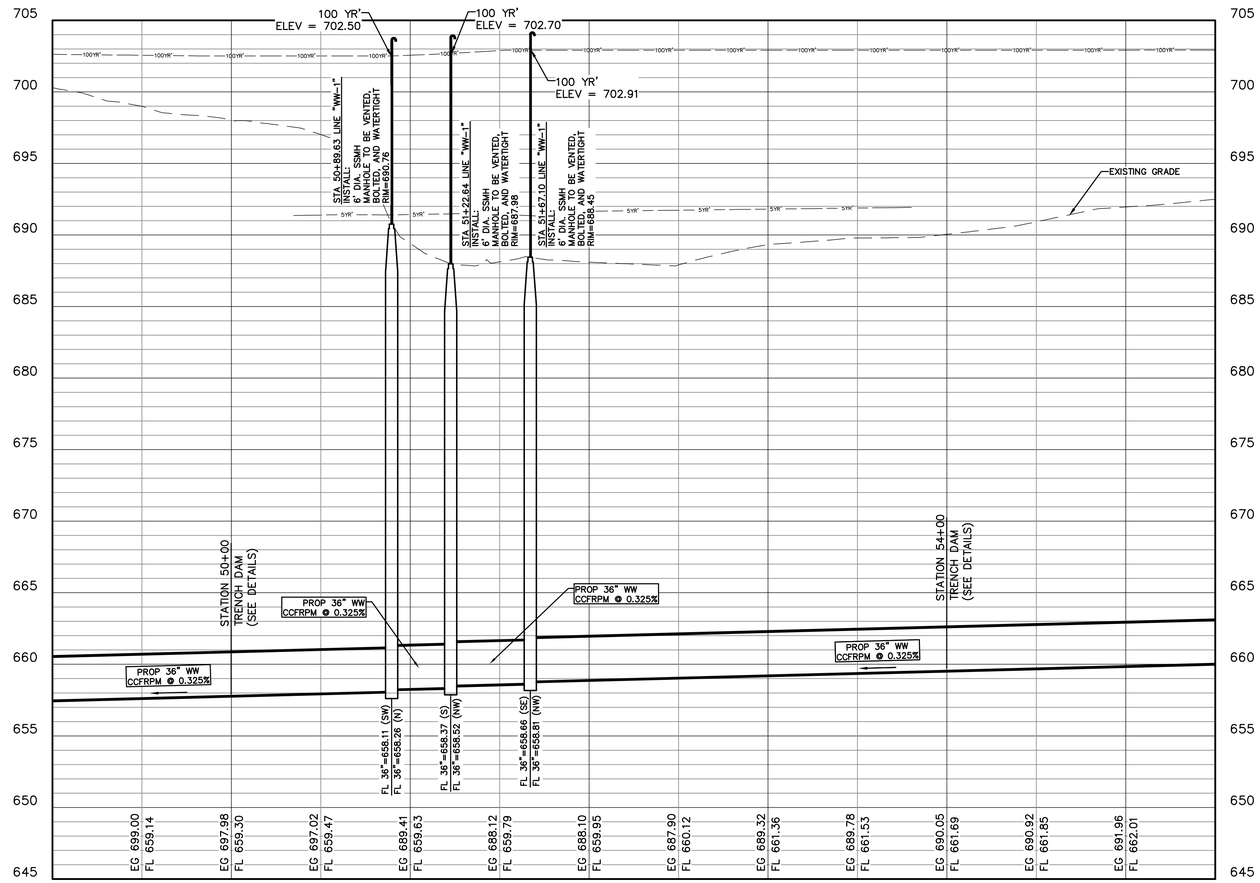

PROFILE: WW-1

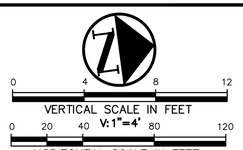

NOTES:

1. MANHOLE INVERT DETAILS AND DRY BERRY CREEK CENTERLINE SECTION CUTS ARE ON THE DETAIL SHEETS.
2. MANHOLES CONTAINED WITHIN THE 100 YEAR' FLOODPLAIN TO BE VENTED 1' ABOVE FLOOD ELEVATION.
3. TREES WITHIN THE TEMPORARY CONSTRUCTION EASEMENT ARE AT CONTRACTORS DISCRETION FOR REMOVAL AND SHOULD BE PROTECTED IF AT ALL POSSIBLE.
4. ACCEPTABLE PIPE MATERIALS INCLUDE CENTRIFUGALLY CAST FIBERGLASS–REINFORCED POLYMER MORTAR AS MANUFACTURED BY HOBAS.
5. CONTRACTOR SHALL RESTORE ALL DISTURBED AREAS TO EXISTING CONDITIONS INCLUDING REESTABLISHMENT OF VEGETATION AND TO REESTABLISH DRAINAGE PATTERNS.
6. IN THE EVENT THAT THE CONTRACTOR ENCOUNTERS UNSTABLE OR UNSUITABLE SOILS, THEN BACKFILL SHALL BE PER THE GEOTECHNICAL REPORT AND PER THE UNSUITABLE SOIL DETAIL.

Westwood
Phone (512) 485-0831
Toll Free (888) 937-5150
8701 N. Mopac Expy, Suite 320
Austin, TX 78759
westwoodps.com
Westwood Professional Services, Inc.
TBPE FIRM REGISTRATION NO. F-11756
TBPLS FIRM REGISTRATION NO. LS-10074301

REVISIONS

NO.	DATE	DESCRIPTION	BY

DBC WASTEWATER INTERCEPTOR
CIVIL INFRASTRUCTURE
GEORGETOWN, TEXAS, 78633
PROP WASTEWATER LINE PLAN & PROFILE SHEET 7 OF 17

STATE OF TEXAS
JACOB W. VALENTIEN
124993
LICENSED PROFESSIONAL ENGINEER

THE SEAL APPEARING ON THIS DOCUMENT WAS AUTHORIZED BY SUPERVISION OF JACOB W. VALENTIEN, P.E. 124993 ON 3/1/2024. ALTERATION OF A SEALED DOCUMENT WITHOUT PROPER NOTIFICATION TO THE RESPONSIBLE ENGINEER IS AN OFFENSE UNDER THE TEXAS ENGINEERING PRACTICE ACT.

DESIGN	DRAWN	DATE
JWV	SAG	MAR 2024

SHEET NO. **16**

16 OF 66

TGLASPER
3/1/2024, 5:46 PM
M:\DWG-46\4670-22.676\DWG\CIVIL C3D 2018\02_SHEETS\PLAN & PROFILES\4670-22.676_PLAN_PROFILES.DWG

PK–4670–22.676_PLAN_PROFILES.DWG

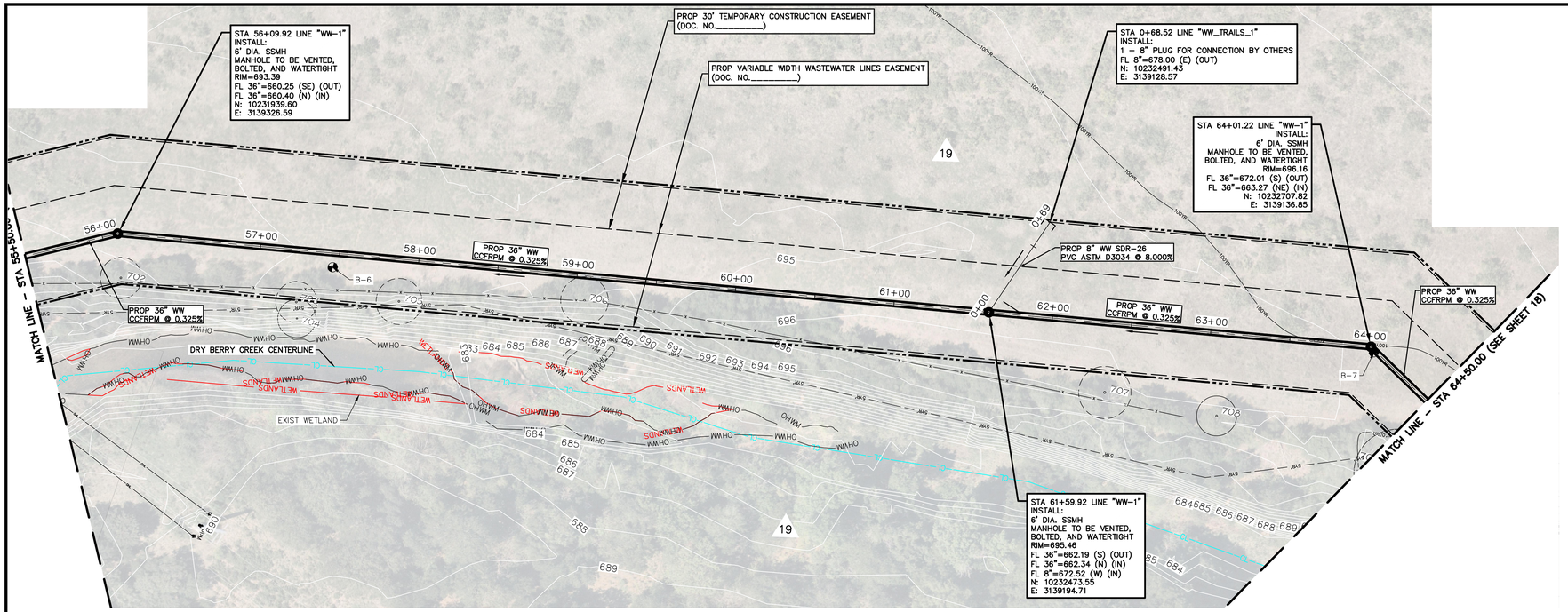

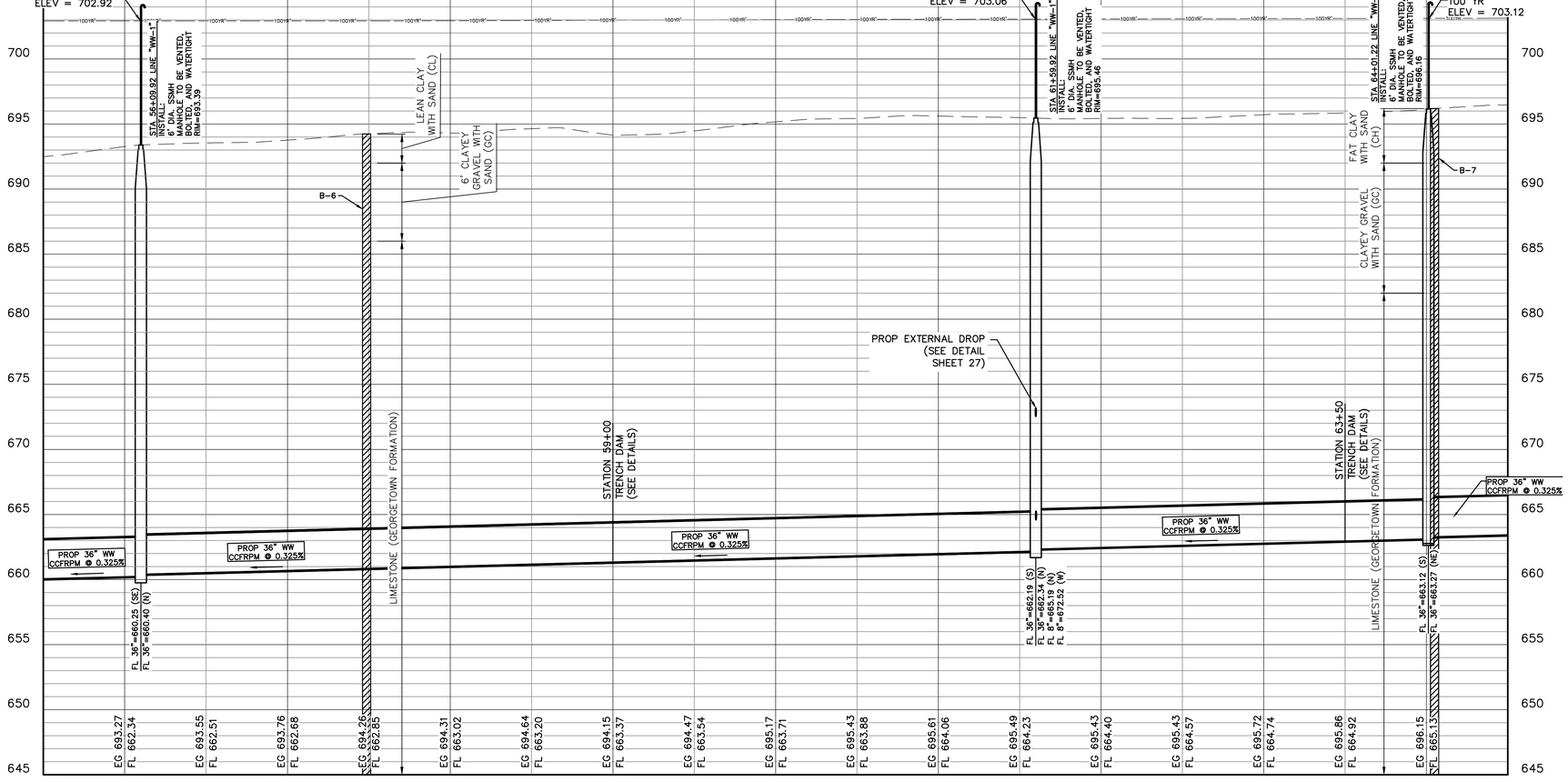

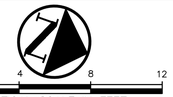

NOTES:

1. MANHOLE INVERT DETAILS AND DRY BERRY CREEK CENTERLINE SECTION CUTS ARE ON THE DETAIL SHEETS.
2. MANHOLES CONTAINED WITHIN THE 100 YEAR' FLOODPLAIN TO BE VENTED 1' ABOVE FLOOD ELEVATION.
3. TREES WITHIN THE TEMPORARY CONSTRUCTION EASEMENT ARE AT CONTRACTORS DISCRETION FOR REMOVAL AND SHOULD BE PROTECTED IF AT ALL POSSIBLE.
4. ACCEPTABLE PIPE MATERIALS INCLUDE CENTRIFUGALLY CAST FIBERGLASS-REINFORCED POLYMER MORTAR AS MANUFACTURED BY HOBAS.
5. CONTRACTOR SHALL RESTORE ALL DISTURBED AREAS TO EXISTING CONDITIONS INCLUDING REESTABLISHMENT OF VEGETATION AND TO REESTABLISH DRAINAGE PATTERNS.
6. IN THE EVENT THAT THE CONTRACTOR ENCOUNTERS UNSTABLE OR UNSUITABLE SOILS, THEN BACKFILL SHALL BE PER THE GEOTECHNICAL REPORT AND PER THE UNSUITABLE SOIL DETAIL.

Westwood
Phone (512) 485-0831
Toll Free (888) 937-5150
8701 N. Mopac Expy, Suite 320
Austin, TX 78759
westwoodps.com
Westwood Professional Services, Inc.
TBPE FIRM REGISTRATION NO. F-11756
TBPLS FIRM REGISTRATION NO. LS-10074301

REVISIONS

NO.	DATE	DESCRIPTION	BY

DBC WASTEWATER INTERCEPTOR
CIVIL INFRASTRUCTURE
GEORGETOWN, TEXAS, 78633
PROP WASTEWATER LINE PLAN & PROFILE SHEET 8 OF 17

STATE OF TEXAS
JACOB W. VALENTIEN
124993
LICENSED PROFESSIONAL ENGINEER

THE SEAL APPEARING ON THIS DOCUMENT WAS AUTHORIZED BY SUPERVISON OF JACOB W. VALENTIEN, P.E. 124993 ON 3/1/2024. ALTERATION OF A SEALED DOCUMENT WITHOUT PROPER NOTIFICATION TO THE RESPONSIBLE ENGINEER IS AN OFFENSE UNDER THE TEXAS ENGINEERING PRACTICE ACT.

DESIGN	DRAWN	DATE
JWV	SAG	MAR 2024

SHEET NO. 17

17 OF 66

TGLASPER
3/1/2024 5:47 PM
M:\DWG-46\4670-22.676\DWG\CIVIL C3D 2018\02_SHEETS\PLAN & PROFILES\4670-22.676_PLAN_PROFILES.DWG

PK-4670-22.676_PLAN_PROFILES.DWG

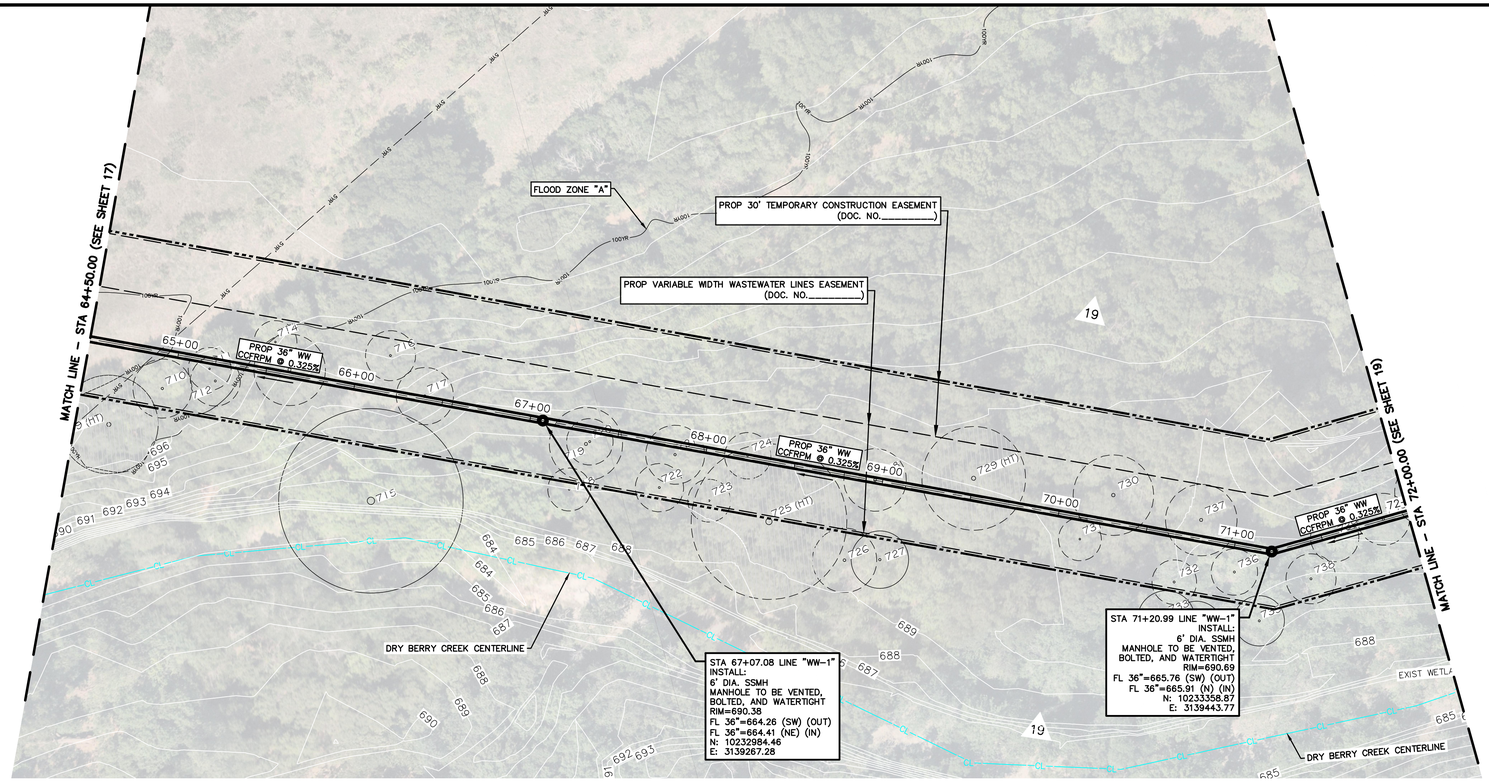

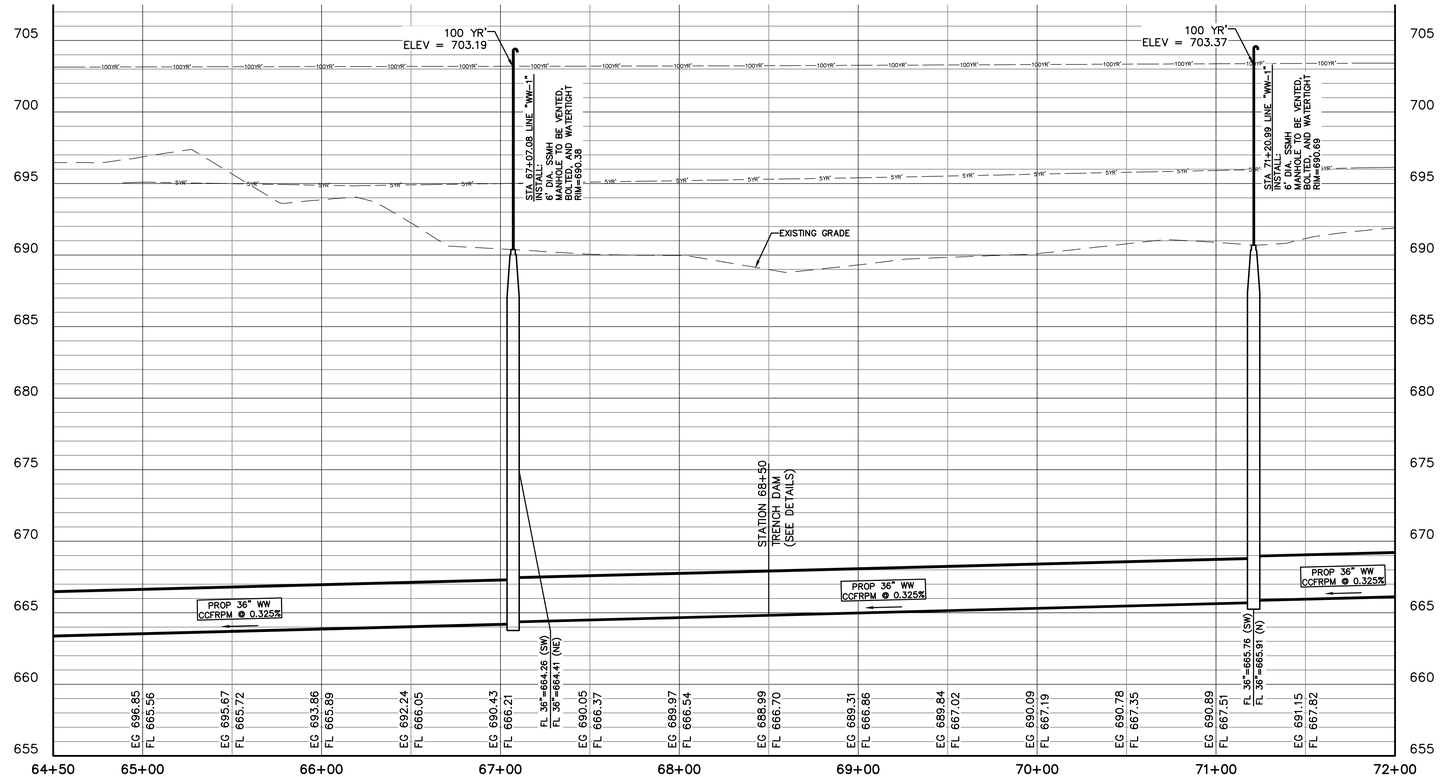

PROFILE: WW-1

NOTES:

1. MANHOLE INVERT DETAILS AND DRY BERRY CREEK CENTERLINE SECTION CUTS ARE ON THE DETAIL SHEETS.
2. MANHOLES CONTAINED WITHIN THE 100 YEAR' FLOODPLAIN TO BE VENTED 1' ABOVE FLOOD ELEVATION.
3. TREES WITHIN THE TEMPORARY CONSTRUCTION EASEMENT ARE AT CONTRACTORS DISCRETION FOR REMOVAL AND SHOULD BE PROTECTED IF AT ALL POSSIBLE.
4. ACCEPTABLE PIPE MATERIALS INCLUDE CENTRIFUGALLY CAST FIBERGLASS-REINFORCED POLYMER MORTAR AS MANUFACTURED BY HOBAS.
5. CONTRACTOR SHALL RESTORE ALL DISTURBED AREAS TO EXISTING CONDITIONS INCLUDING REESTABLISHMENT OF VEGETATION AND TO REESTABLISH DRAINAGE PATTERNS.
6. IN THE EVENT THAT THE CONTRACTOR ENCOUNTERS UNSTABLE OR UNSUITABLE SOILS, THEN BACKFILL SHALL BE PER THE GEOTECHNICAL REPORT AND PER THE UNSUITABLE SOIL DETAIL.

VERTICAL SCALE IN FEET
0 4 8 12
V: 1"=4'
HORIZONTAL SCALE IN FEET
0 20 40 80 120
1"=40'

Westwood
Phone (512) 485-0831
Toll Free (888) 937-5150
8701 N. Mopac Expy, Suite 320
Austin, TX 78759
westwoodps.com
Westwood Professional Services, Inc.
TBPE FIRM REGISTRATION NO. F-11756
TBPLS FIRM REGISTRATION NO. LS-10074301

REVISIONS

NO.	DESCRIPTION	DATE	BY

DBC WASTEWATER INTERCEPTOR
CIVIL INFRASTRUCTURE
GEORGETOWN, TEXAS, 78633
PROP WASTEWATER LINE PLAN & PROFILE SHEET 9 OF 17

STATE OF TEXAS
JACOB W. VALENTIEN
124993
LICENSED PROFESSIONAL ENGINEER

THE SEAL APPEARING ON THIS DOCUMENT WAS AUTHORIZED BY SUPERVISION OF JACOB W. VALENTIEN, P.E. 124993 ON 3/1/2024. ALTERATION OF A SEALED DOCUMENT WITHOUT PROPER NOTIFICATION TO THE RESPONSIBLE ENGINEER IS AN OFFENSE UNDER THE TEXAS ENGINEERING PRACTICE ACT.

DESIGN	DRAWN	DATE
JWV	SAG	MAR 2024

SHEET NO.
18
18 OF 66

TGLASPER
3/1/2024 5:47 PM
M:\DWG-46\4670-22.676\DWG\CIVIL C3D 2018\02_SHEETS\PLAN & PROFILES\4670-22.676_PLAN_PROFILES.DWG

PK-4670-22.676_PLAN_PROFILES.DWG

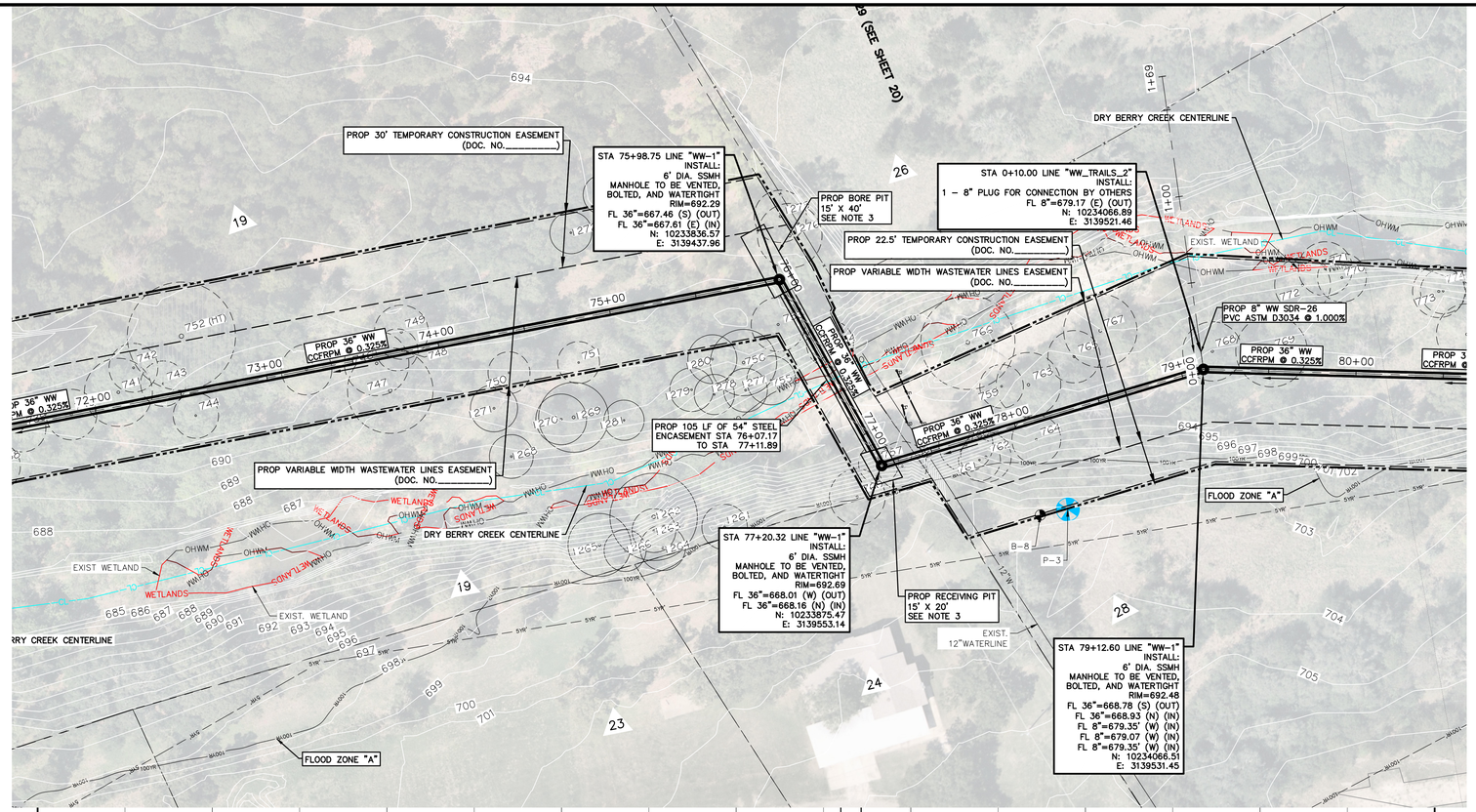

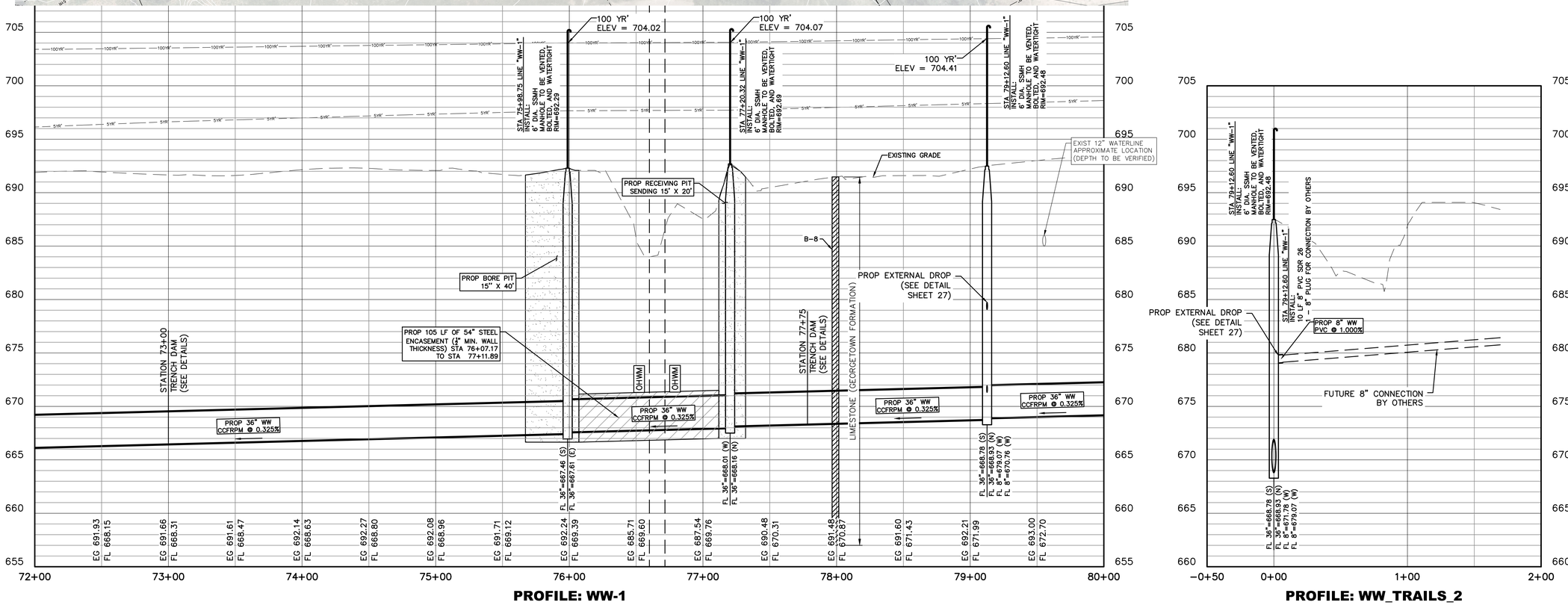

0 4 8 12
VERTICAL SCALE IN FEET
V: 1"=4'
0 20 40 80 120
HORIZONTAL SCALE IN FEET
1"=40'

NOTES:

1. MANHOLE INVERT DETAILS AND DRY BERRY CREEK CENTERLINE SECTION CUTS ARE ON THE DETAIL SHEETS.
2. MANHOLES CONTAINED WITHIN THE 100 YEAR' FLOODPLAIN TO BE VENTED 1' ABOVE FLOOD ELEVATION.
3. BORE AND RECEIVING PIT DIMENSIONS SHOWN ARE APPROXIMATE. CONTRACTOR IS RESPONSIBLE FOR THEIR EXACT LOCATIONS AND FOR SELECTING DIMENSIONS TO FACILITATE UTILIZATION OF THEIR MEANS AND METHODS WITHIN THE AVAILABLE EASEMENT SHOWN WITHOUT CONFLICTING WITH OR IMPACTING UTILITIES. THE CONTRACTOR IS SOLELY RESPONSIBLE FOR THE DESIGN OF THE SUPPORT OF EXCAVATION SYSTEM AND THE CONTROL OF GROUNDWATER FOR EACH PIT IN ACCORDANCE WITH THE CONTRACT SPECIFICATIONS.
4. FOR ALL TRENCHLESS WORK REFER TO NOTES ON SHEET NO. 2.
5. STEEL CASING BENEATH DRY BERRY CREEK MAY BE INSTALLED BY EITHER TUNNEL BORING MACHINE PER SPEC SECTION 33 30 02, MICROTUNNEL BORING MACHINE PER SPEC SECTION 33 30 03, OR HAND TUNNELING PER SPEC SECTION 33 30 04.
6. TREES WITHIN THE TEMPORARY CONSTRUCTION EASEMENT ARE AT CONTRACTORS DISCRETION FOR REMOVAL AND SHOULD BE PROTECTED IF AT ALL POSSIBLE.
7. ACCEPTABLE PIPE MATERIALS INCLUDE CENTRIFUGALLY CAST FIBERGLASS-REINFORCED POLYMER MORTAR AS MANUFACTURED BY HOBAS.
8. CONTRACTOR SHALL RESTORE ALL DISTURBED AREAS TO EXISTING CONDITIONS INCLUDING REESTABLISHMENT OF VEGETATION AND TO REESTABLISH DRAINAGE PATTERNS.
9. IN THE EVENT THAT THE CONTRACTOR ENCOUNTERS UNSTABLE OR UNSUITABLE SOILS, THEN BACKFILL SHALL BE PER THE GEOTECHNICAL REPORT AND PER THE UNSUITABLE SOIL DETAIL.

Westwood
Phone (512) 485-0831
Toll Free (888) 937-5150
8701 N. Mopac Expy, Suite 320
Austin, TX 78759
westwoodps.com
Westwood Professional Services, Inc.
TBPE FIRM REGISTRATION NO. F-11756
TBPLS FIRM REGISTRATION NO. LS-10074301

REVISIONS

NO.	DESCRIPTION	DATE	BY

DBC WASTEWATER INTERCEPTOR
CIVIL INFRASTRUCTURE
GEORGETOWN, TEXAS, 78633
PROP WASTEWATER LINE PLAN & PROFILE SHEET 10 OF 17

STATE OF TEXAS
JACOB W. VALENTIEN
124993
LICENSED PROFESSIONAL ENGINEER

THE SEAL APPEARING ON THIS DOCUMENT WAS AUTHORIZED BY SUPERVISION OF JACOB W. VALENTIEN, P.E. 124993 ON 3/4/2024. ALTERATION OF A SEALED DOCUMENT WITHOUT PROPER NOTIFICATION TO THE RESPONSIBLE ENGINEER IS AN OFFENSE UNDER THE TEXAS ENGINEERING PRACTICE ACT.

DESIGN	DRAWN	DATE
JWV	SAG	MAR 2024

SHEET NO. 19
19 OF 66

JVALENTIEN
3/4/2024 9:20 AM
M:\DWG-46\4670-22.676\DWG\CIVIL C3D 2018\02_SHEETS\PLAN & PROFILES\4670-22.676_PLAN_PROFILES.DWG

PK-4670-22.676_PLAN_PROFILES.DWG

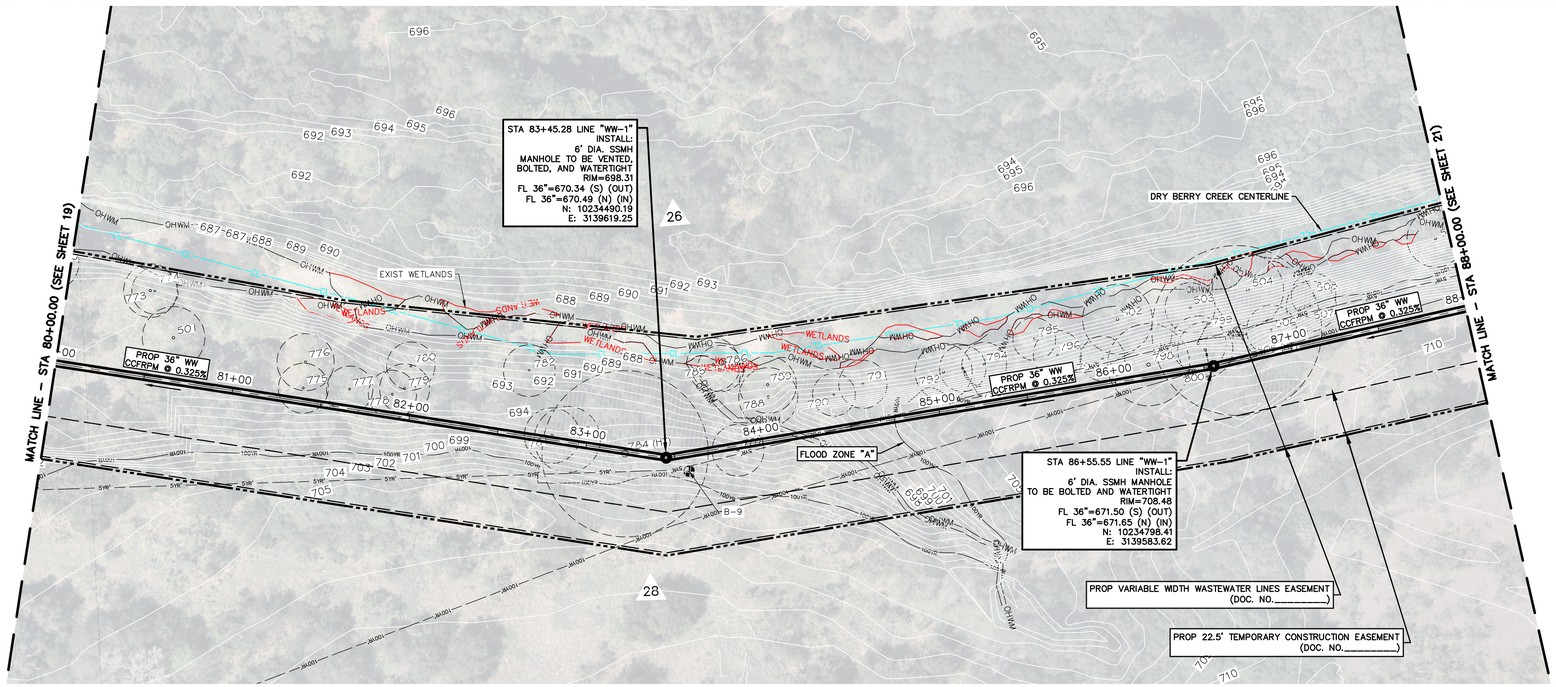

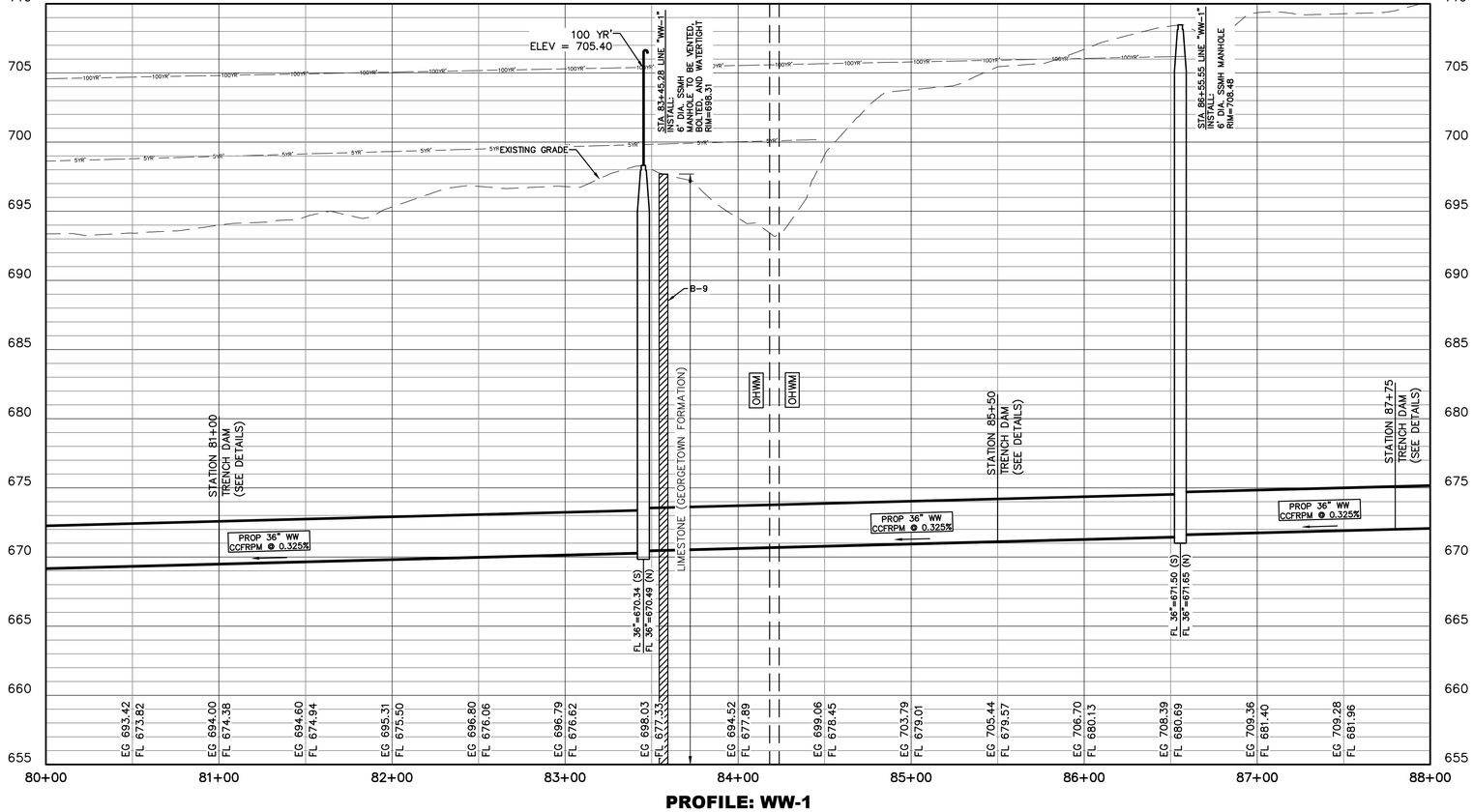

PROFILE: WW-1



NOTES:

1. MANHOLE INVERT DETAILS AND DRY BERRY CREEK CENTERLINE SECTION CUTS ARE ON THE DETAIL SHEETS.
2. MANHOLES CONTAINED WITHIN THE 100 YEAR' FLOODPLAIN TO BE VENTED 1' ABOVE FLOOD ELEVATION.
3. TREES WITHIN THE TEMPORARY CONSTRUCTION EASEMENT ARE AT CONTRACTORS DISCRETION FOR REMOVAL AND SHOULD BE PROTECTED IF AT ALL POSSIBLE.
4. ACCEPTABLE PIPE MATERIALS INCLUDE CENTRIFUGALLY CAST FIBERGLASS-REINFORCED POLYMER MORTAR AS MANUFACTURED BY HOBAS.
5. CONTRACTOR SHALL RESTORE ALL DISTURBED AREAS TO EXISTING CONDITIONS INCLUDING REESTABLISHMENT OF VEGETATION AND TO REESTABLISH DRAINAGE PATTERNS.
6. IN THE EVENT THAT THE CONTRACTOR ENCOUNTERS UNSTABLE OR UNSUITABLE SOILS, THEN BACKFILL SHALL BE PER THE GEOTECHNICAL REPORT AND PER THE UNSUITABLE SOIL DETAIL.

Westwood
Phone (512) 485-0831
Toll Free (888) 937-5150
8701 N. Mopac Expy, Suite 320
Austin, TX 78759
westwoodps.com
Westwood Professional Services, Inc.
TBPE FIRM REGISTRATION NO. F-11756
TBPLS FIRM REGISTRATION NO. LS-10074301

REVISIONS

NO.	DESCRIPTION	DATE	BY

DBC WASTEWATER INTERCEPTOR
CIVIL INFRASTRUCTURE
GEORGETOWN, TEXAS, 78633
PROP WASTEWATER LINE PLAN & PROFILE SHEET 11 OF 17

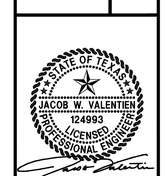

THE SEAL APPEARING ON THIS DOCUMENT WAS AUTHORIZED BY SUPERVISON OF JACOB W. VALENTIEN, P.E. 124993 ON 3/1/2024. ALTERATION OF A SEALED DOCUMENT WITHOUT PROPER NOTIFICATION TO THE RESPONSIBLE ENGINEER IS AN OFFENSE UNDER THE TEXAS ENGINEERING PRACTICE ACT.

DESIGN	DRAWN	DATE
JWV	SAG	MAR 2024

SHEET NO.
20
20 OF 66

TG:JASPER
3/1/2024 5:47 PM
M:\DWG-46\4670-22.676\DWG\CIVIL C3D 2018\02_SHEETS\PLAN & PROFILES\4670-22.676_PLAN_PROFILES.DWG

PK-4670-22.676_PLAN_PROFILES.DWG

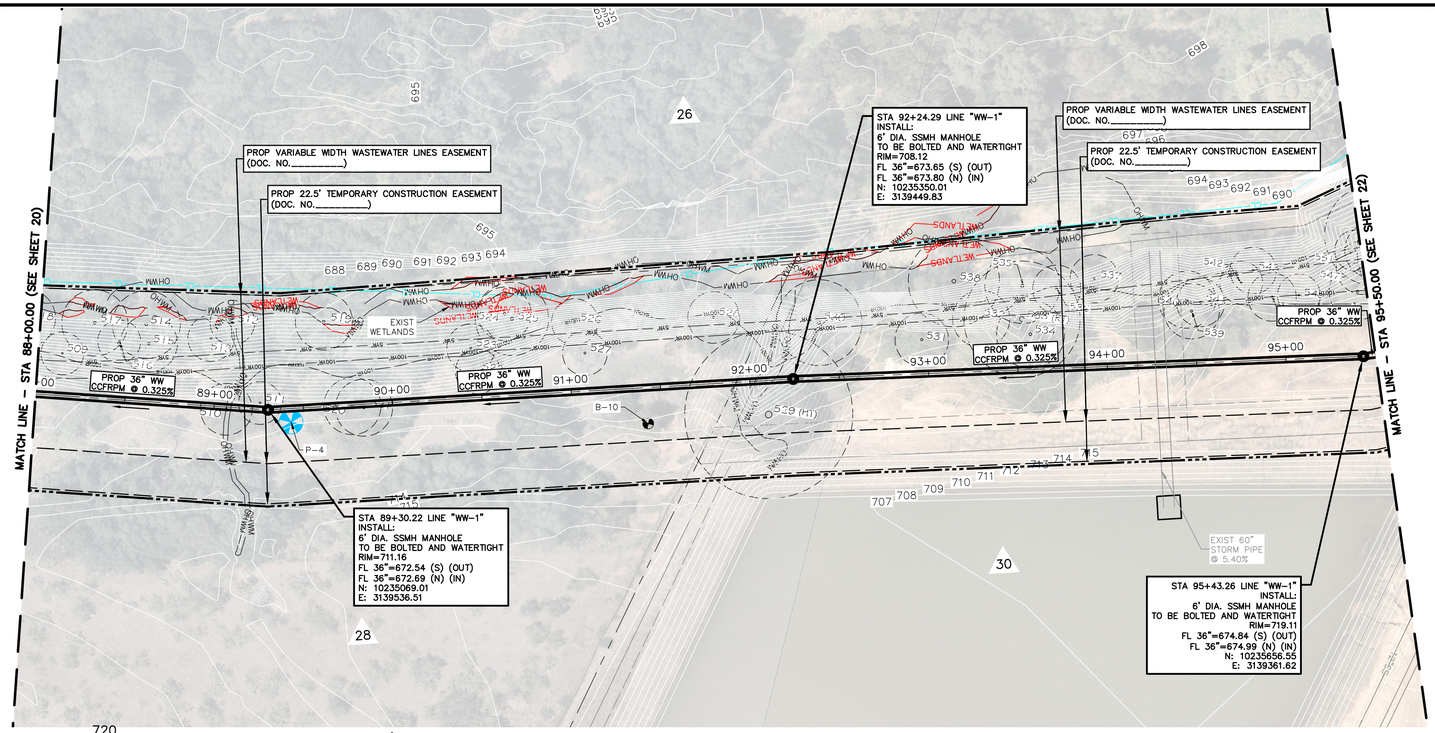

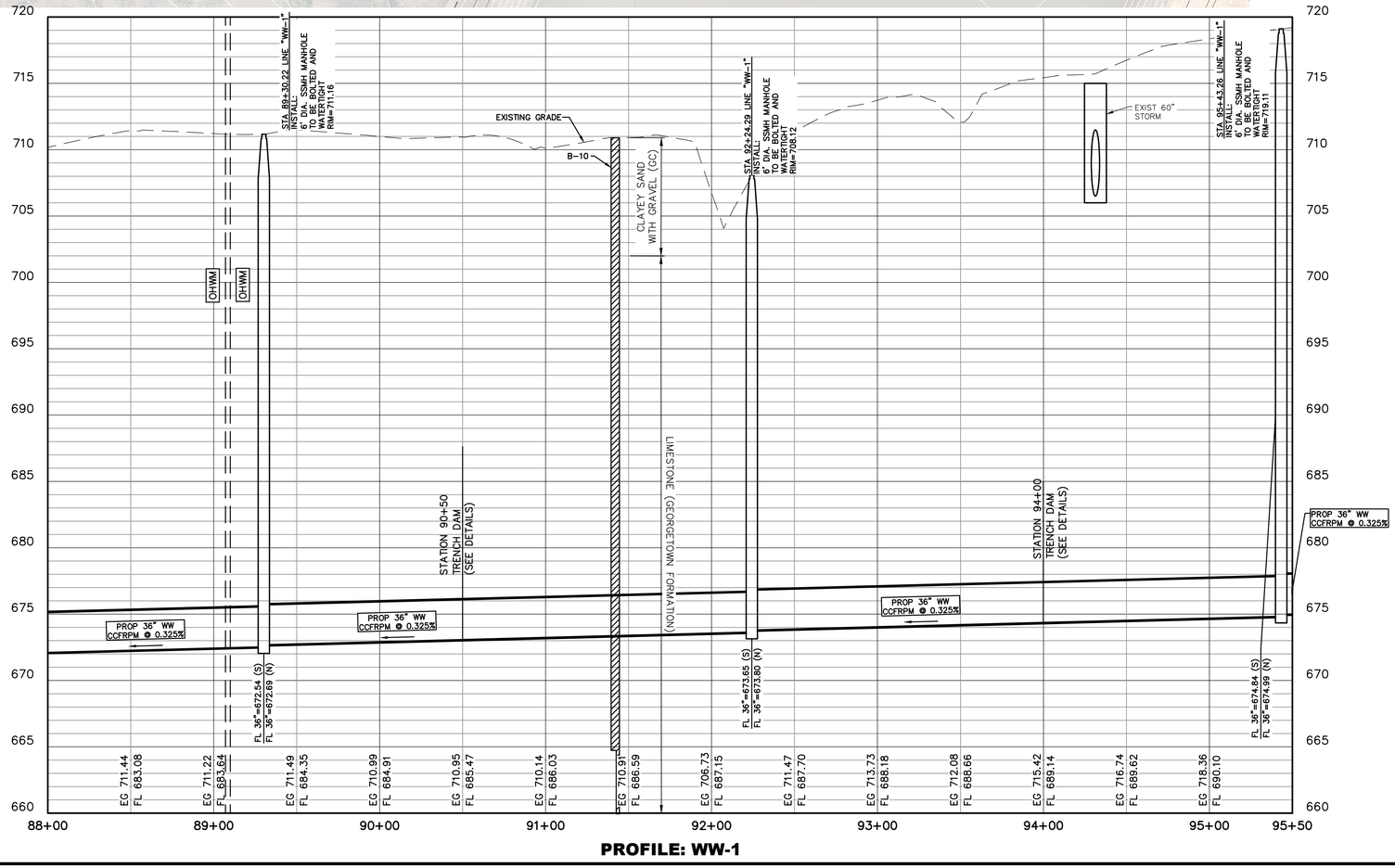

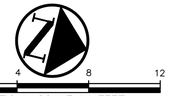

NOTES:

1. MANHOLE INVERT DETAILS AND DRY BERRY CREEK CENTERLINE SECTION CUTS ARE ON THE DETAIL SHEETS.
2. MANHOLES CONTAINED WITHIN THE 100 YEAR FLOODPLAIN TO BE VENTED 1' ABOVE FLOOD ELEVATION.
3. TREES WITHIN THE TEMPORARY CONSTRUCTION EASEMENT ARE AT CONTRACTORS DISCRETION FOR REMOVAL AND SHOULD BE PROTECTED IF AT ALL POSSIBLE.
4. ACCEPTABLE PIPE MATERIALS INCLUDE CENTRIFUGALLY CAST FIBERGLASS-REINFORCED POLYMER MORTAR AS MANUFACTURED BY HOBAS.
5. CONTRACTOR SHALL RESTORE ALL DISTURBED AREAS TO EXISTING CONDITIONS INCLUDING REESTABLISHMENT OF VEGETATION AND TO REESTABLISH DRAINAGE PATTERNS.
6. IN THE EVENT THAT THE CONTRACTOR ENCOUNTERS UNSTABLE OR UNSUITABLE SOILS, THEN BACKFILL SHALL BE PER THE GEOTECHNICAL REPORT AND PER THE UNSUITABLE SOIL DETAIL.

Westwood
Phone (512) 485-0831
Toll Free (888) 937-5150
8701 N. Mopac Expy, Suite 320
Austin, TX 78759
westwoodps.com
Westwood Professional Services, Inc.
TBPE FIRM REGISTRATION NO. F-11756
TBPLS FIRM REGISTRATION NO. LS-10074301

REVISIONS

NO.	DESCRIPTION	DATE	BY

DBC WASTEWATER INTERCEPTOR
CIVIL INFRASTRUCTURE
GEORGETOWN, TEXAS, 78633
PROP WASTEWATER LINE PLAN & PROFILE SHEET 12 OF 17

STATE OF TEXAS
JACOB W. VALENTIEN
124993
LICENSED
PROFESSIONAL ENGINEER

THE SEAL APPEARING ON THIS DOCUMENT WAS AUTHORIZED BY SUPERVISION OF JACOB W. VALENTIEN, P.E. 124993 ON 3/1/2024. ALTERATION OF A SEALED DOCUMENT WITHOUT PROPER NOTIFICATION TO THE RESPONSIBLE ENGINEER IS AN OFFENSE UNDER THE TEXAS ENGINEERING PRACTICE ACT.

DESIGN	DRAWN	DATE
JWV	SAG	MAR 2024

SHEET NO.
21
21 OF 66

TQLASPER
3/1/2024 5:48 PM
M:\DWG-46\4670-22.676\DWG\CIVIL C3D 2018\02_SHEETS\PLAN & PROFILES\4670-22.676_PLAN_PROFILES.DWG

PK-4670-22.676_PLAN_PROFILES.DWG

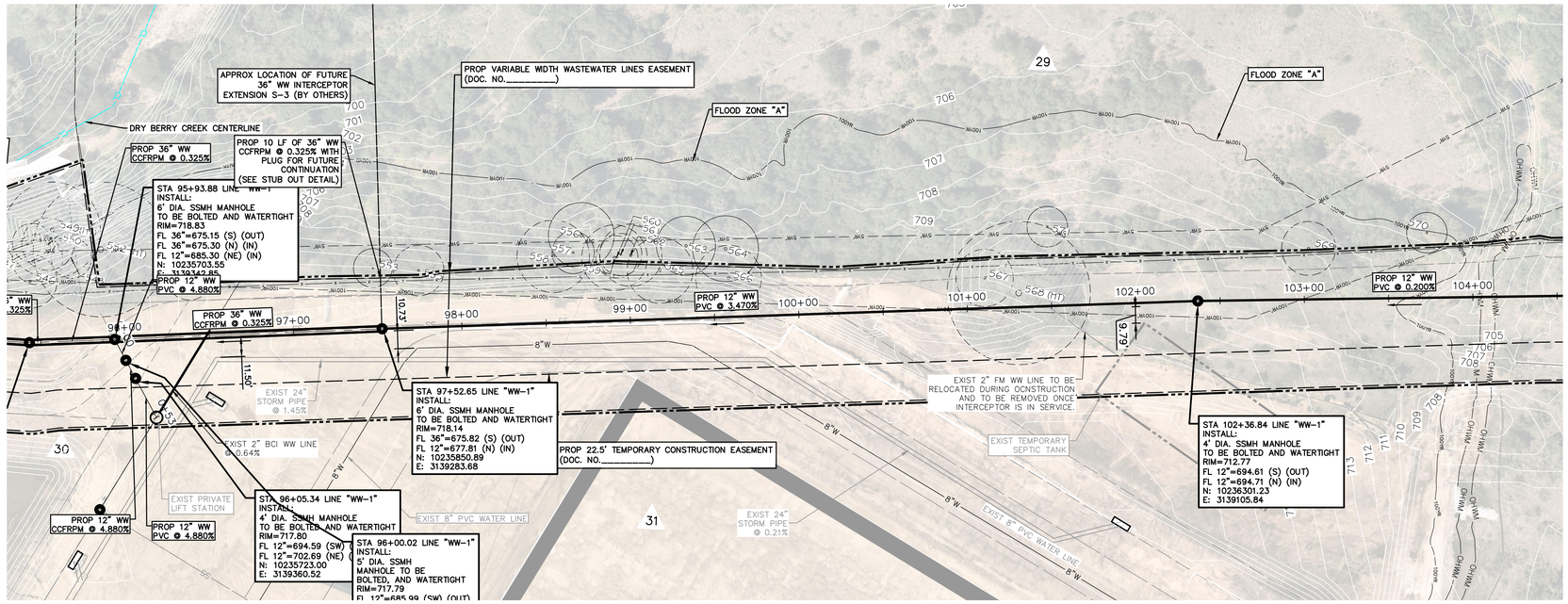

0 4 8 12
VERTICAL SCALE IN FEET
V: 1"=4'
0 20 40 80 120
HORIZONTAL SCALE IN FEET
1"=40'

NOTES:

1. MANHOLE INVERT DETAILS AND DRY BERRY CREEK CENTERLINE SECTION CUTS ARE ON THE DETAIL SHEETS.
2. MANHOLES CONTAINED WITHIN THE 100 YEAR FLOODPLAIN TO BE VENTED 1' ABOVE FLOOD ELEVATION.
3. TREES WITHIN THE TEMPORARY CONSTRUCTION EASEMENT ARE AT CONTRACTORS DISCRETION FOR REMOVAL AND SHOULD BE PROTECTED IF AT ALL POSSIBLE.
4. ACCEPTABLE PIPE MATERIALS INCLUDE CENTRIFUGALLY CAST FIBERGLASS--REINFORCED POLYMER MORTAR AS MANUFACTURED BY HOBAS.
5. CONTRACTOR SHALL RESTORE ALL DISTURBED AREAS TO EXISTING CONDITIONS INCLUDING REESTABLISHMENT OF VEGETATION AND TO REESTABLISH DRAINAGE PATTERNS.
6. IN THE EVENT THAT THE CONTRACTOR ENCOUNTERS UNSTABLE OR UNSUITABLE SOILS, THEN BACKFILL SHALL BE PER THE GEOTECHNICAL REPORT AND PER THE UNSUITABLE SOIL DETAIL.

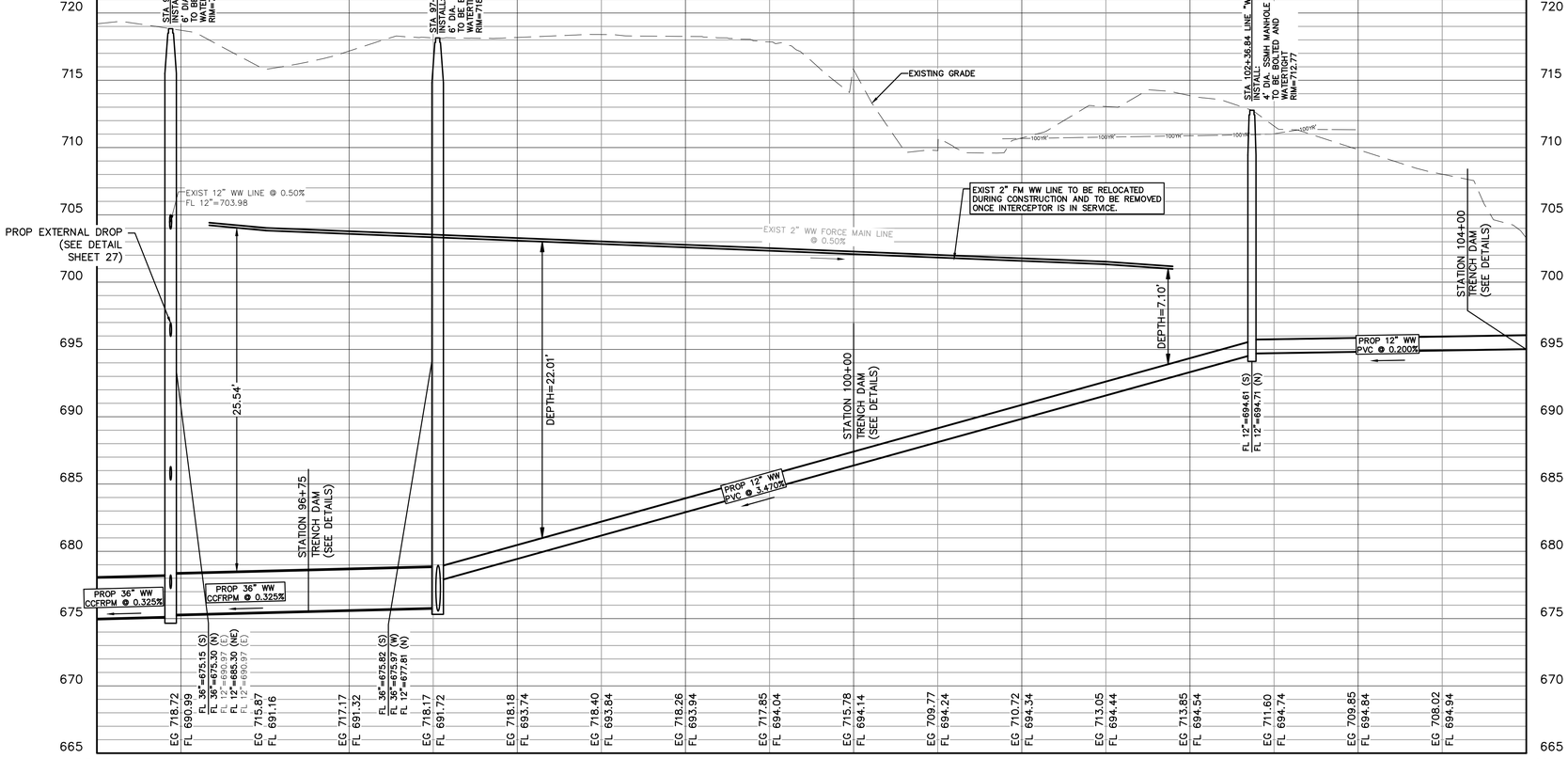

PROFILE: WW-1

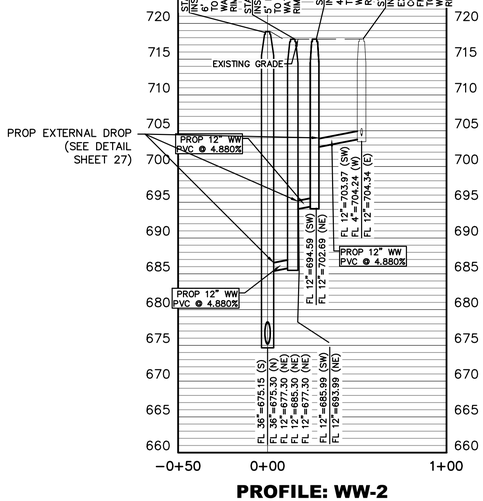

PROFILE: WW-2

Westwood
Phone (512) 485-0831
Toll Free (888) 937-5150
8701 N. Mopac Expy, Suite 320
Austin, TX 78759
westwoodps.com
Westwood Professional Services, Inc.
TBPE FIRM REGISTRATION NO. F-11756
TBPLS FIRM REGISTRATION NO. LS-10074301

REVISIONS

NO.	DATE	DESCRIPTION	BY

DBC WASTEWATER INTERCEPTOR
CIVIL INFRASTRUCTURE
GEORGETOWN, TEXAS, 78633
PROP WASTEWATER LINE PLAN & PROFILE SHEET 13 OF 17

STATE OF TEXAS
JACOB W. VALENTIEN
124993
LICENSED PROFESSIONAL ENGINEER

THE SEAL APPEARING ON THIS DOCUMENT WAS AUTHORIZED BY SUPERVISION OF JACOB W. VALENTIEN, P.E. 124993 ON 3/4/2024. ALTERATION OF A SEALED DOCUMENT WITHOUT PROPER NOTIFICATION TO THE RESPONSIBLE ENGINEER IS AN OFFENSE UNDER THE TEXAS ENGINEERING PRACTICE ACT.

DESIGN	DRAWN	DATE
JWV	SAG	MAR 2024

SHEET NO.
22
22 OF 66

JVALENTIEN
3/4/2024 10:08 AM
M:\DWG-46\4670-22.676\DWG\CIVIL C3D 2018\02_SHEETS\PLAN & PROFILES\4670-22.676_PLAN_PROFILES.DWG

PK-4670-22.676_PLAN_PROFILES.DWG

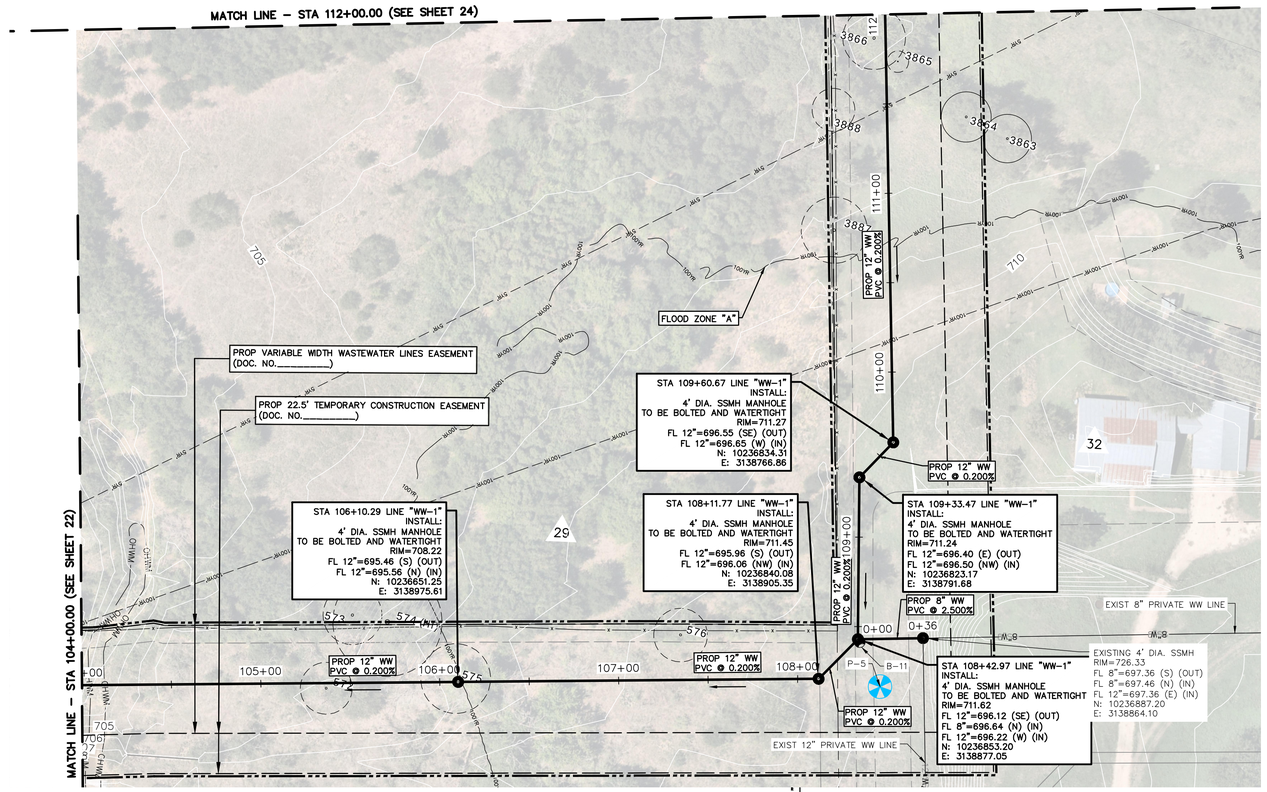

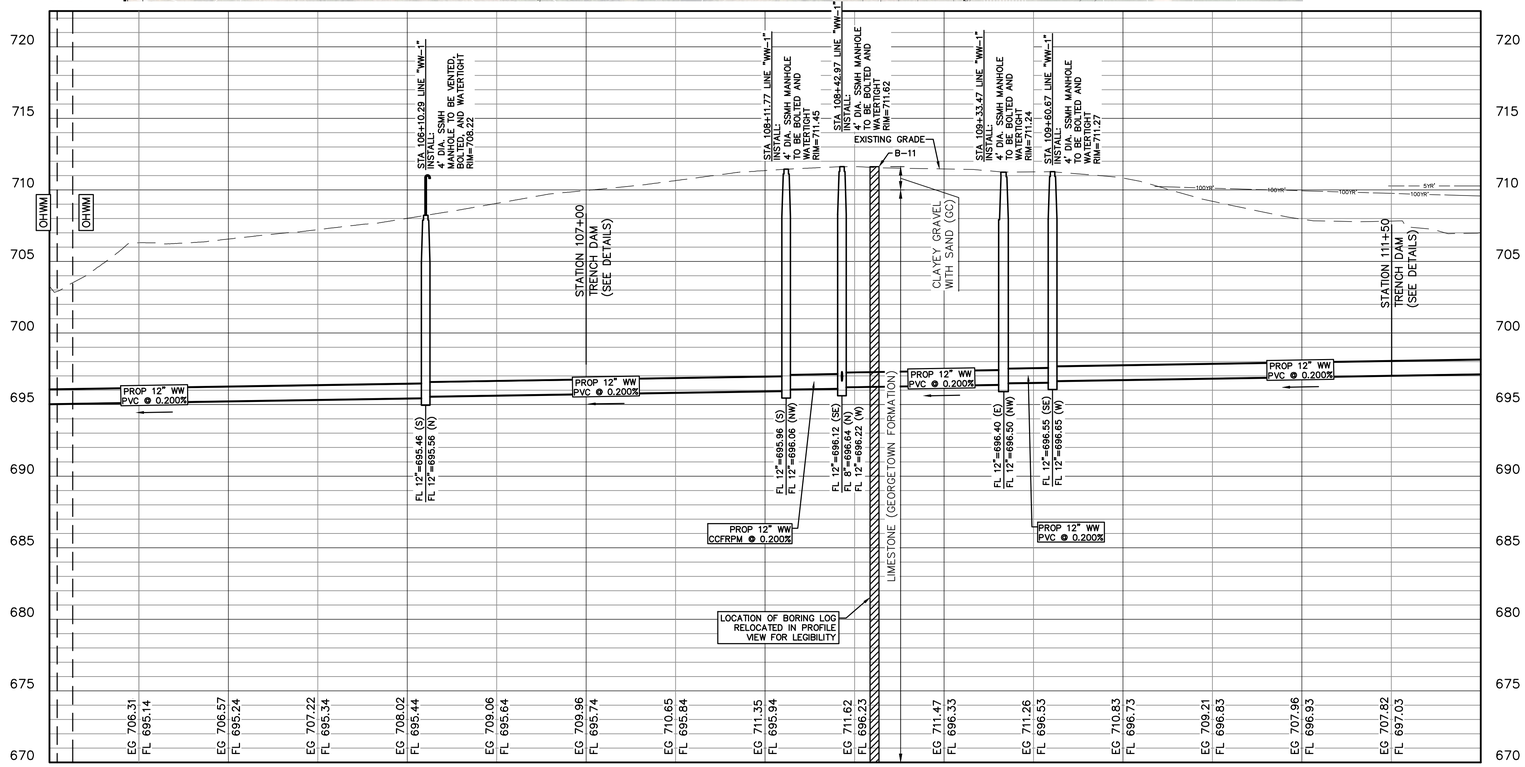

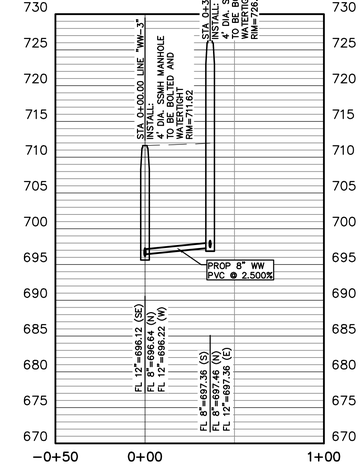

PROFILE: WW-3

0 4 8 12
VERTICAL SCALE IN FEET
V: 1"=4'
0 20 40 80 120
HORIZONTAL SCALE IN FEET
1"=40'

NOTES:

1. MANHOLE INVERT DETAILS AND DRY BERRY CREEK CENTERLINE SECTION CUTS ARE ON THE DETAIL SHEETS
2. MANHOLES CONTAINED WITHIN THE 100 YEAR FLOODPLAIN TO BE VENTED 1' ABOVE FLOOD ELEVATION.
3. TREES WITHIN THE TEMPORARY CONSTRUCTION EASEMENT ARE AT CONTRACTORS DISCRETION FOR REMOVAL AND SHOULD BE PROTECTED IF AT ALL POSSIBLE.
4. CONTRACTOR SHALL RESTORE ALL DISTURBED AREAS TO EXISTING CONDITIONS INCLUDING REESTABLISHMENT OF VEGETATION AND TO REESTABLISH DRAINAGE PATTERNS.
5. IN THE EVENT THAT THE CONTRACTOR ENCOUNTERS UNSTABLE OR UNSUITABLE SOILS, THEN BACKFILL SHALL BE PER THE GEOTECHNICAL REPORT AND PER THE UNSUITABLE SOIL DETAIL.

Westwood
Phone (512) 485-0831
Toll Free (888) 937-5150
8701 N. Mopac Expy, Suite 320
Austin, TX 78759
westwoodps.com
Westwood Professional Services, Inc.
TBPE FIRM REGISTRATION NO. F-11756
TBPLS FIRM REGISTRATION NO. LS-10074301

REVISIONS

NO.	DATE	DESCRIPTION	BY

DBC WASTEWATER INTERCEPTOR
CIVIL INFRASTRUCTURE
GEORGETOWN, TEXAS, 78633
PROP WASTEWATER LINE PLAN & PROFILE SHEET 14 OF 17

STATE OF TEXAS
JACOB W. VALENTIEN
124993
LICENSED
PROFESSIONAL ENGINEER

THE SEAL APPEARING ON THIS DOCUMENT WAS AUTHORIZED BY SUPERVISION OF JACOB W. VALENTIEN, P.E. 124993 ON 3/1/2024. ALTERATION OF A SEALED DOCUMENT WITHOUT PROPER NOTIFICATION TO THE RESPONSIBLE ENGINEER IS AN OFFENSE UNDER THE TEXAS ENGINEERING PRACTICE ACT.

DESIGN	DRAWN	DATE
JWV	SAG	MAR 2024

SHEET NO. 23

23 OF 66

TGLASPER
3/1/2024 7:22 PM
M:\DWG-46\4670-22.676\DWG\CIVIL C3D 2018\02_SHEETS\PLAN & PROFILES\4670-22.676_PLAN_PROFILES.DWG

PK-4670-22.676_PLAN_PROFILES.DWG

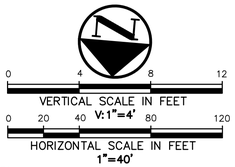

NOTES:

1. MANHOLE INVERT DETAILS AND DRY BERRY CREEK CENTERLINE SECTION CUTS ARE ON THE DETAIL SHEETS.
2. MANHOLES CONTAINED WITHIN THE 100 YEAR' FLOODPLAIN TO BE VENTED 1' ABOVE FLOOD ELEVATION.
3. TREES WITHIN THE TEMPORARY CONSTRUCTION EASEMENT ARE AT CONTRACTORS DISCRETION FOR REMOVAL AND SHOULD BE PROTECTED IF AT ALL POSSIBLE.
4. CONTRACTOR SHALL RESTORE ALL DISTURBED AREAS TO EXISTING CONDITIONS INCLUDING REESTABLISHMENT OF VEGETATION AND TO REESTABLISH DRAINAGE PATTERNS.
5. IN THE EVENT THAT THE CONTRACTOR ENCOUNTERS UNSTABLE OR UNSUITABLE SOILS, THEN BACKFILL SHALL BE PER THE GEOTECHNICAL REPORT AND PER THE UNSUITABLE SOIL DETAIL.

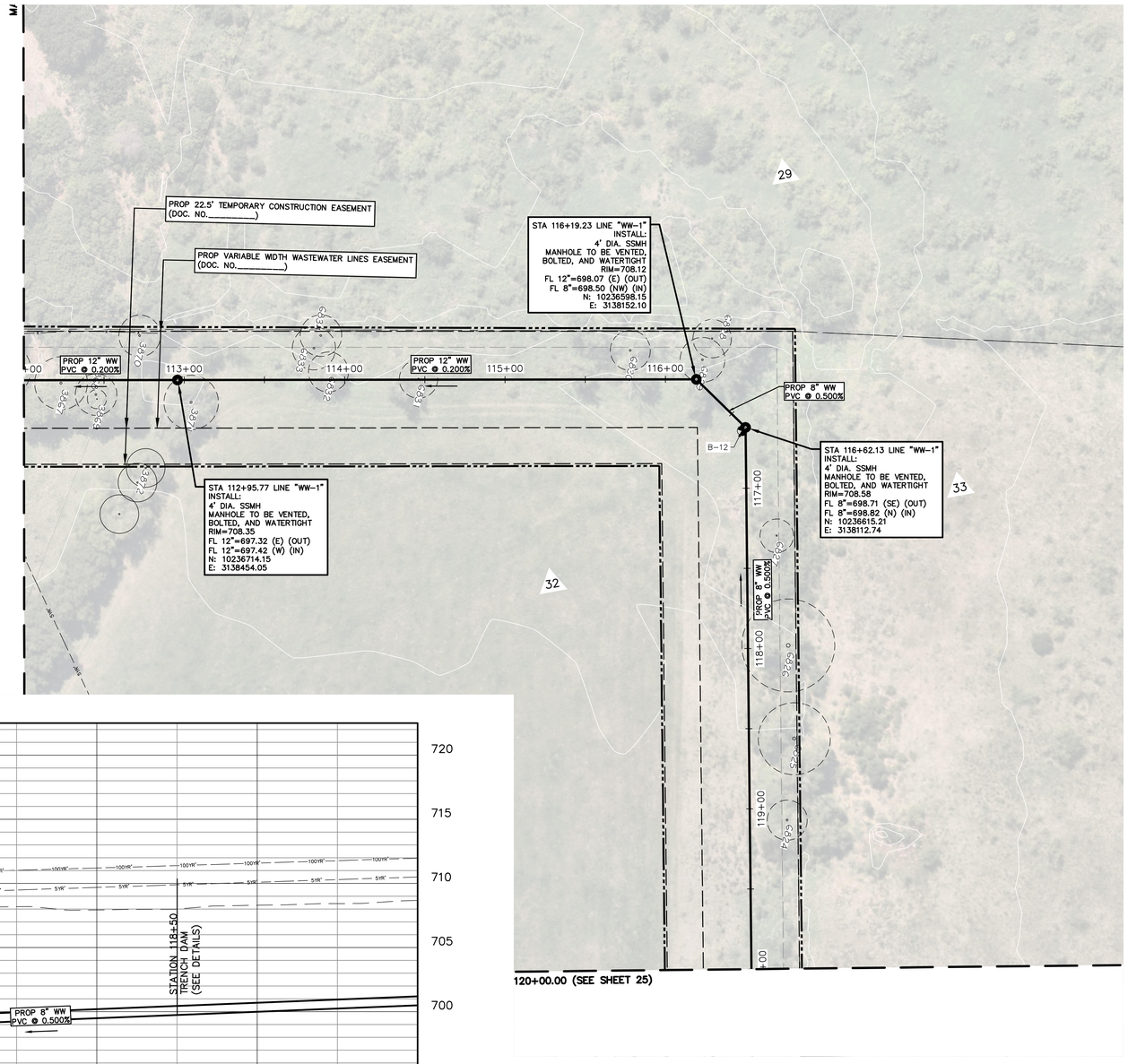

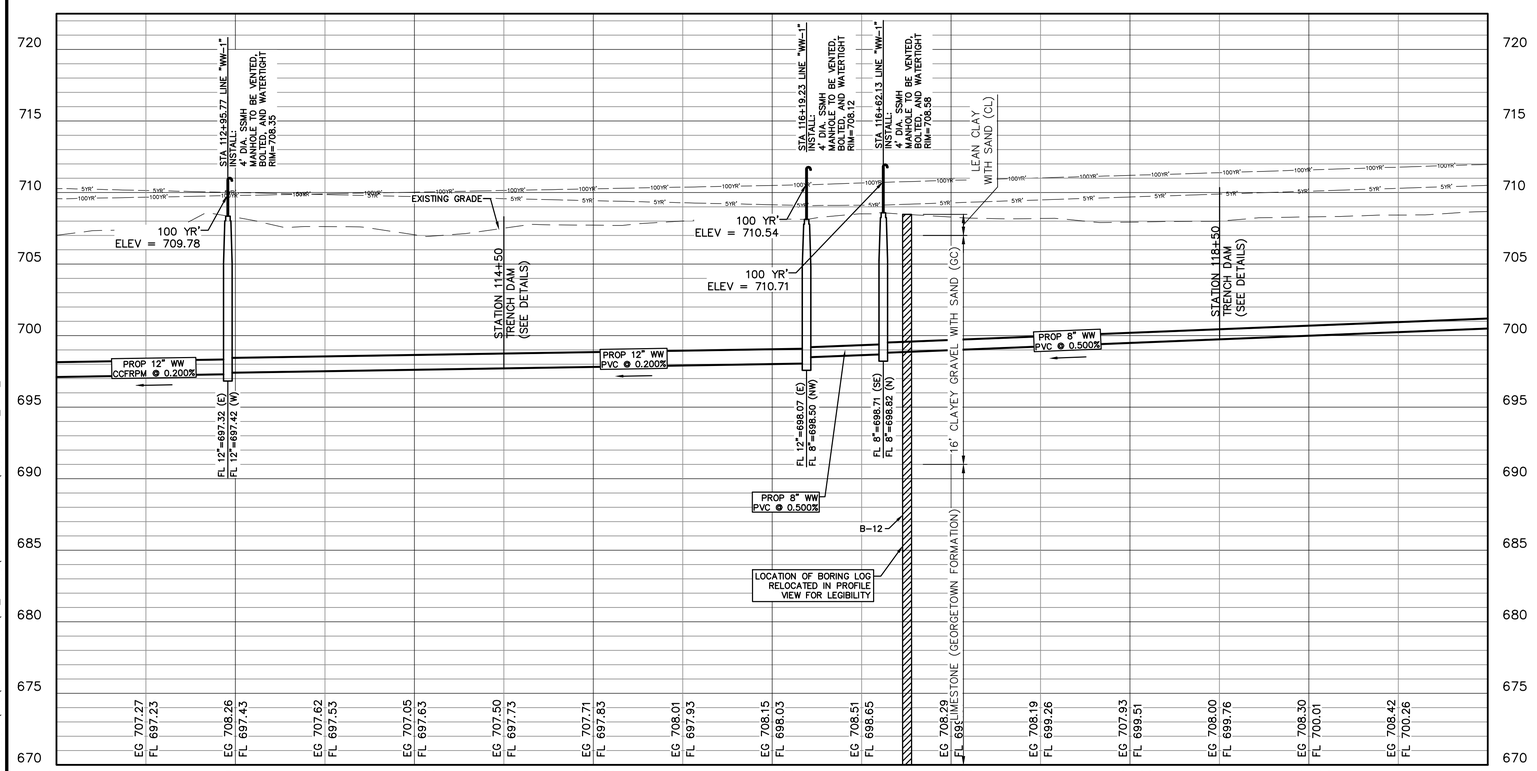

PROFILE: WW-1

Westwood

Phone (512) 485-0831
Toll Free (888) 937-5150

8701 N. Mopac Expy, Suite 320
Austin, TX 78759
westwoodps.com

Westwood Professional Services, Inc.
TBPE FIRM REGISTRATION NO. F-11756
TBPLS FIRM REGISTRATION NO. LS-10074301

REVISIONS

NO.	DATE	DESCRIPTION	BY

DBC WASTEWATER INTERCEPTOR
CIVIL INFRASTRUCTURE
GEORGETOWN, TEXAS, 78633
PROP WASTEWATER LINE PLAN & PROFILE SHEET 15 OF 17

STATE OF TEXAS
JACOB W. VALENTIEN
124993
LICENSED PROFESSIONAL ENGINEER

THE SEAL APPEARING ON THIS DOCUMENT WAS AUTHORIZED BY SUPERVISON OF JACOB W. VALENTIEN, P.E. 124993 ON 3/1/2024. ALTERATION OF A SEALED DOCUMENT WITHOUT PROPER NOTIFICATION TO THE RESPONSIBLE ENGINEER IS AN OFFENSE UNDER THE TEXAS ENGINEERING PRACTICE ACT.

DESIGN	DRAWN	DATE
JWV	SAG	MAR 2024

SHEET NO.
24
24 OF 66

PK-4670-22.676_PLAN_PROFILES.DWG

TG.ASPER
3/1/2024 7:17 PM
M:\DWG-46\4670-22.676\DWG\CIVIL C3D 2018\02_SHEETS\PLAN & PROFILES\4670-22.676_PLAN_PROFILES.DWG

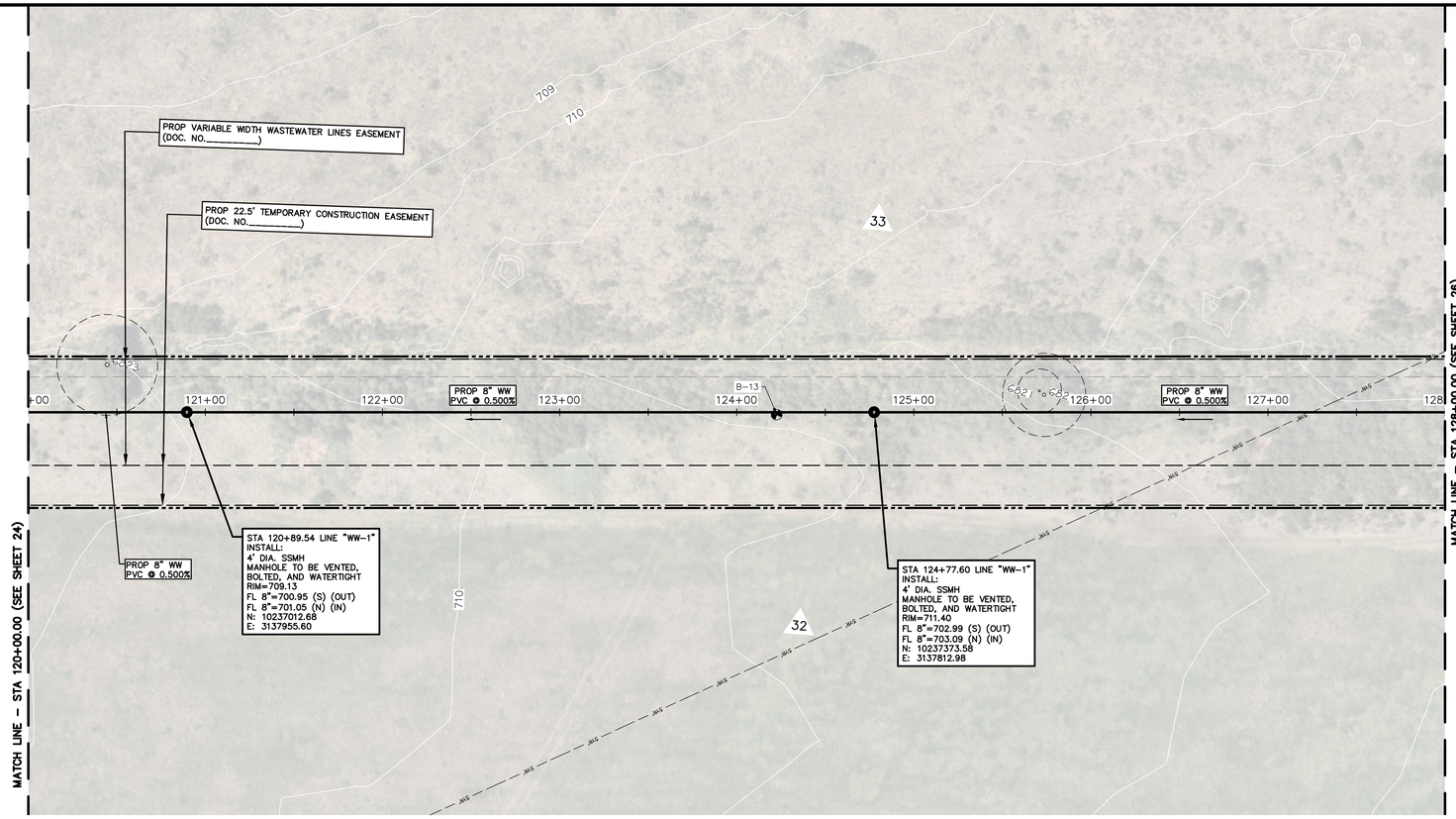

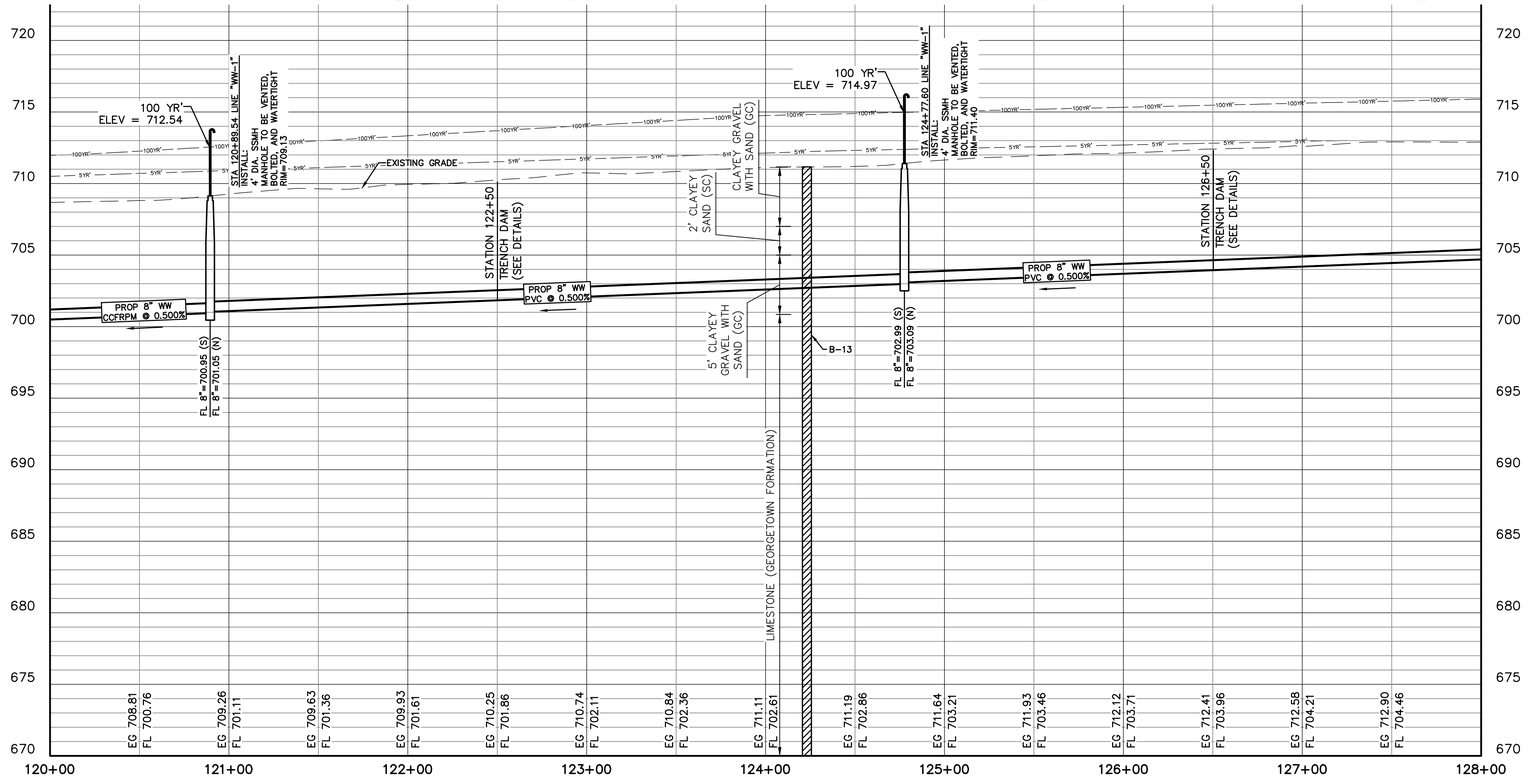

PROFILE: WW-1

0 4 8 12
VERTICAL SCALE IN FEET
V: 1"=4'
0 20 40 80 120
HORIZONTAL SCALE IN FEET
1"=40'

NOTES:

1. MANHOLE INVERT DETAILS AND DRY BERRY CREEK CENTERLINE SECTION CUTS ARE ON THE DETAIL SHEETS
2. MANHOLES CONTAINED WITHIN THE 100 YEAR' FLOODPLAIN TO BE VENTED 1' ABOVE FLOOD ELEVATION.
3. TREES WITHIN THE TEMPORARY CONSTRUCTION EASEMENT ARE AT CONTRACTORS DISCRETION FOR REMOVAL AND SHOULD BE PROTECTED IF AT ALL POSSIBLE.
4. CONTRACTOR SHALL RESTORE ALL DISTURBED AREAS TO EXISTING CONDITIONS INCLUDING REESTABLISHMENT OF VEGETATION AND TO REESTABLISH DRAINAGE PATTERNS.
5. IN THE EVENT THAT THE CONTRACTOR ENCOUNTERS UNSTABLE OR UNSUITABLE SOILS, THEN BACKFILL SHALL BE PER THE GEOTECHNICAL REPORT AND PER THE UNSUITABLE SOIL DETAIL.

Westwood
Phone (512) 485-0831
Toll Free (888) 937-5150
8701 N. Mopac Expy, Suite 320
Austin, TX 78759
westwoodps.com
Westwood Professional Services, Inc.
TBPE FIRM REGISTRATION NO. F-11756
TBPLS FIRM REGISTRATION NO. LS-10074301

REVISIONS

NO.	DATE	DESCRIPTION	BY

DBC WASTEWATER INTERCEPTOR
CIVIL INFRASTRUCTURE
GEORGETOWN, TEXAS, 78633
PROP WASTEWATER LINE PLAN & PROFILE SHEET 16 OF 17

STATE OF TEXAS
JACOB W. VALENTIEN
124993
LICENSED
PROFESSIONAL ENGINEER

THE SEAL APPEARING ON THIS DOCUMENT WAS AUTHORIZED BY SUPERVISION OF JACOB W. VALENTIEN, P.E. 124993 ON 3/1/2024. ALTERATION OF A SEALED DOCUMENT WITHOUT PROPER NOTIFICATION TO THE RESPONSIBLE ENGINEER IS AN OFFENSE UNDER THE TEXAS ENGINEERING PRACTICE ACT.

DESIGN	DRAWN	DATE
JWV	SAG	MAR 2024

SHEET NO.
25
25 OF 66

TQLASPER
3/1/2024 5:49 PM
M:\DWG-46\4670-22.676\DWG\CIVIL C3D 2018\02_SHEETS\PLAN & PROFILES\4670-22.676_PLAN_PROFILES.DWG

PK-4670-22.676_PLAN_PROFILES.DWG

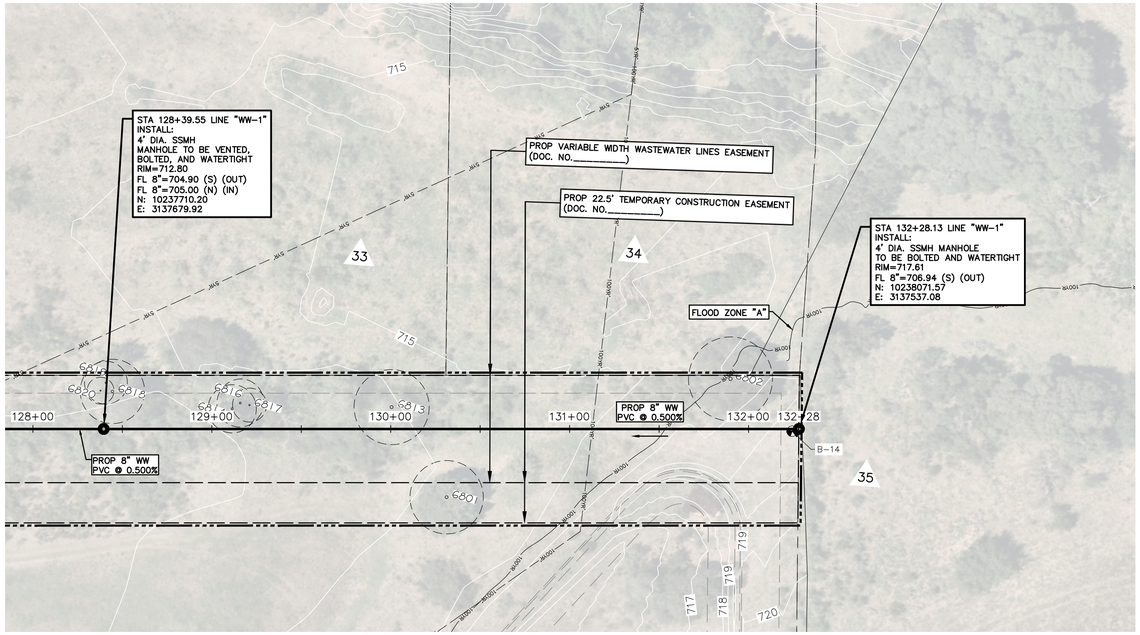

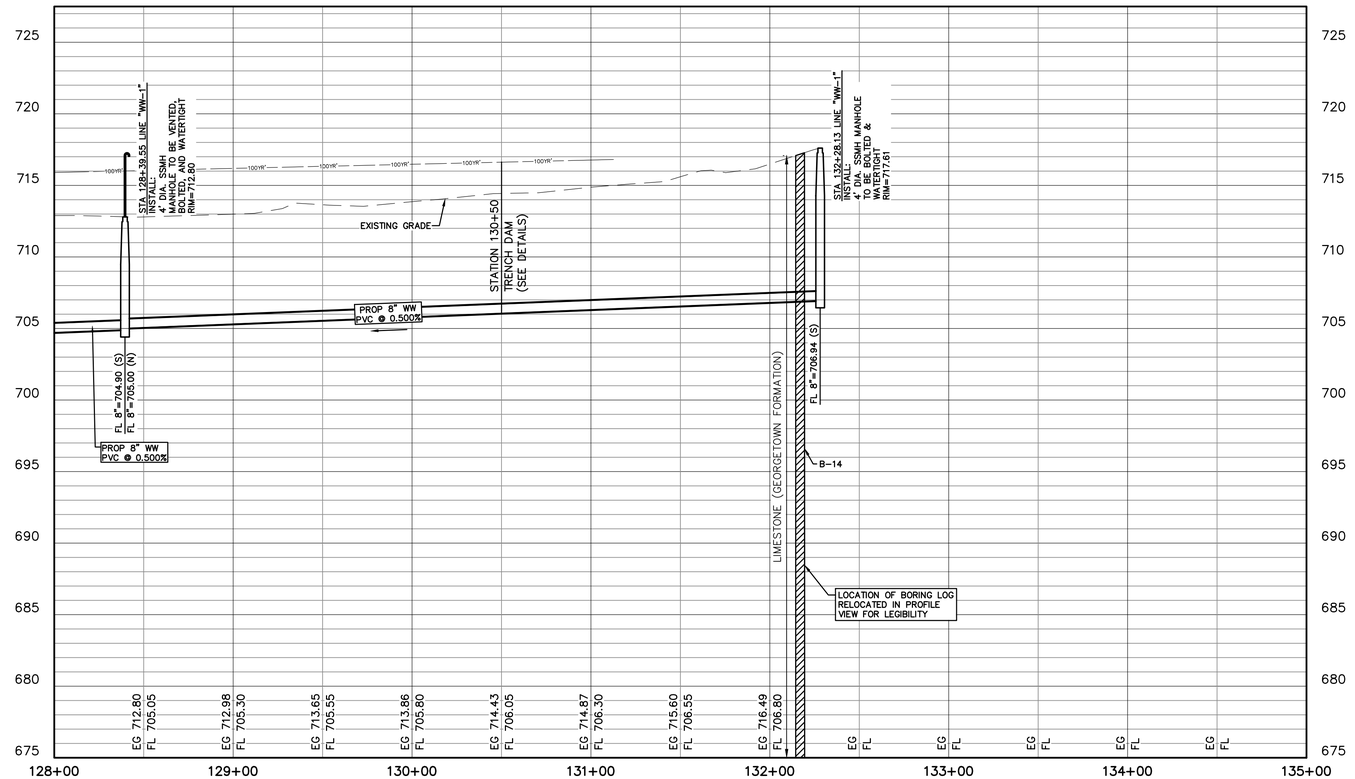

PROFILE: WW-1



NOTES:

1. MANHOLE INVERT DETAILS AND DRY BERRY CREEK CENTERLINE SECTION CUTS ARE ON THE DETAIL SHEETS
2. MANHOLES CONTAINED WITHIN THE 100 YEAR FLOODPLAIN TO BE VENTED 1' ABOVE FLOOD ELEVATION.
3. TREES WITHIN THE TEMPORARY CONSTRUCTION EASEMENT ARE AT CONTRACTORS DISCRETION FOR REMOVAL AND SHOULD BE PROTECTED IF AT ALL POSSIBLE.
4. CONTRACTOR SHALL RESTORE ALL DISTURBED AREAS TO EXISTING CONDITIONS INCLUDING REESTABLISHMENT OF VEGETATION AND TO REESTABLISH DRAINAGE PATTERNS.
5. IN THE EVENT THAT THE CONTRACTOR ENCOUNTERS UNSTABLE OR UNSUITABLE SOILS, THEN BACKFILL SHALL BE PER THE GEOTECHNICAL REPORT AND PER THE UNSUITABLE SOIL DETAIL.

Westwood
Phone (512) 485-0831
Toll Free (888) 937-5150
8701 N. Mopac Expy, Suite 320
Austin, TX 78759
westwoodps.com
Westwood Professional Services, Inc.
TBPE FIRM REGISTRATION NO. F-11756
TBPLS FIRM REGISTRATION NO. LS-10074301

REVISIONS

NO.	DATE	DESCRIPTION	BY

DBC WASTEWATER INTERCEPTOR
CIVIL INFRASTRUCTURE
GEORGETOWN, TEXAS, 78633
PROP WASTEWATER LINE PLAN & PROFILE SHEET 17 OF 17

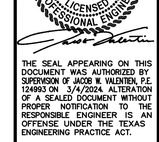

THE SEAL APPEARING ON THIS DOCUMENT WAS AUTHORIZED BY SUPERVISION OF JACOB W. VALENTIEN, P.E. 124993 ON 3/4/2024. ALTERATION OF A SEALED DOCUMENT WITHOUT PROPER NOTIFICATION TO THE RESPONSIBLE ENGINEER IS AN OFFENSE UNDER THE TEXAS ENGINEERING PRACTICE ACT.

DESIGN	DRAWN	DATE
JWV	SAG	MAR 2024

SHEET NO.
26
26 OF 66

PK-4670-22.676_PLAN_PROFILES.DWG

JVALENTIEN
3/4/2024 10:13 AM
M:\DWG-46\4670-22.676\DWG\CIVIL C3D 2018\02_SHEETS\PLAN & PROFILES\4670-22.676_PLAN_PROFILES.DWG

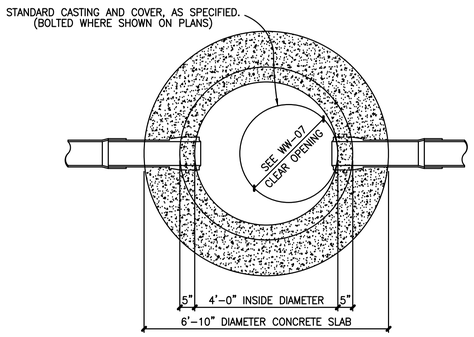

MANHOLE PLAN

CITY OF GEORGETOWN NOTES:

MANHOLE DETAILS SHALL REFLECT THE CITY'S MINIMUM SPECIFICATIONS, AS STATED BELOW:

A. ALL MANHOLES SHALL BE 48" I.D., R.C.P., CLASS III, WITH RUBBER PROFILE GASKET – SINGLE OFF–SET JOINT CONFORMING TO ASTM C478, C433 AND C76.
B. ALL MANHOLES SHALL HAVE FRAME AND COVER, AS MANUFACTURED BY EAST JORDAN IRON WORKS (AS PER DETAIL # WW–07) OR APPROVED EQUIVALENT.
C. ALL MANHOLES SHALL BE CONCRETE WITH CAST IRON FRAME AND COVER.
D. ALL MANHOLES SHALL HAVE AN ECCENTRIC CONE.
E. MANHOLES MAY HAVE A FLAT LID, IF APPROVED BY CITY OF GEORGETOWN, BEING 12" THICK WITH A MINIMUM 30" OPENING, AS MANUFACTURED BY HANSEN PIPE AND PRECAST OR APPROVED EQUAL M.F.G. CONFORMING TO ASTM C478, 5000 P.S.I. CONCRETE, TRAFFIC BEARING AND WITH PROFILE GASKET – SINGLE OFF–SET JOINT CONFORMING TO ASTM C443.
F. INVERTS AND FLEXIBLE SEAL BOOTS, PER ASTM C–923, SHALL BE CAST INTO BASE SECTION.
G. MINIMUM DROP BETWEEN INVERTS SHALL BE ONE–TENTH OF A FOOT (0.1').
H. GRADE RINGS WITH AN I.D. TO MATCH FRAMES CLEAR OPENING WITH A MAXIMUM ADJUSTMENT OF 12" ARE ALLOWED.

The Architect/Engineer assumes responsibility for appropriate use of this standard.

REVISION NOTE:	ADOPTED 6/21/2006
DRAWING NAME:	WW02
SCALE: NTS	DATE: 1/2003
DRAWN BY: MRS	APPROVED BY: TRB

CITY OF GEORGETOWN CONSTRUCTION STANDARDS AND DETAILS
STANDARD MANHOLE – PLAN

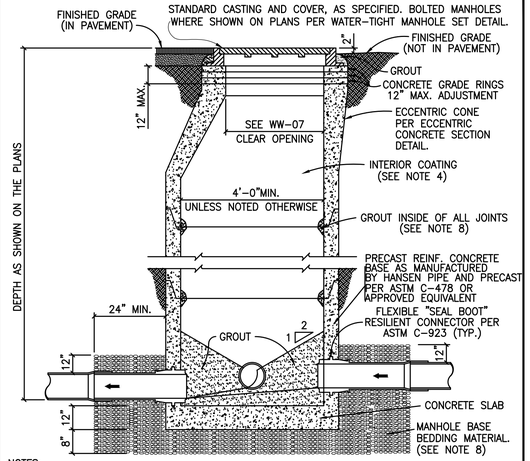

NOTES:
1. MANHOLES SHALL BE PRECAST ASTM C–478 BELL AND SPIGOT WITH PROFILE GASKET – SINGLE OFF–SET JOINTS.
2. SEE PLANS AND MANHOLE SCHEDULE, FOR MANHOLE SIZE, LOCATION, CONFIGURATION, TYPE OF TOP SECTION, VENTING REQUIREMENTS, PIPE SIZE AND TYPES.
3. SEE SPECIFICATIONS ON MATERIALS AND CONSTRUCTION.
4. AN 80 MIL. COAT OF RAVEN LINING SYSTEMS, RAVEN 405 ULTRA HIGH BUILD EPOXY COATING, OR SPRAY WALL EPOXY COATING, OR APPROVED EQUAL, TO BE APPLIED TO ENTIRE INTERIOR OF EACH WASTEWATER MANHOLE AND UNDERSIDE OF FLAT TOPS.
5. ALL MANHOLE COVERS SHALL BE BOLTED AND GASKETTED WHEN MANHOLES ARE LOCATED OUT FROM PAVEMENT.
6. MANHOLES TO BE VENTED ARE IDENTIFIED ON MANHOLE SCHEDULE. REFERENCE MANHOLE VENT DETAIL.
7. MANHOLES ARE TO BE DESIGNED TO RESIST LATERAL AND VERTICAL SOIL FORCES RESULTING FROM MANHOLE DEPTH. ADDITIONALLY, MANHOLES LOCATED IN PAVEMENT TO BE DESIGNED FOR HS–20 TRAFFIC LOADS.
8. GROUT SHALL MEET THE REQUIREMENTS AS STATED BY THE COATING MANUFACTURER.
9. MANHOLE BASE BEDDING MATERIAL SPECS. FOR 3/4" WASHED GRAVEL:
   SIEVE SIZE 2", PERCENT (%) RETAINED 0
   SIEVE SIZE 1 1/2", % RETAINED 0–10
   SIEVE SIZE 1", % RETAINED 45–80
   SIEVE SIZE 3/4", % RETAINED 85–100
   SIEVE SIZE 3/8", % RETAINED 95–100

The Architect/Engineer assumes responsibility for appropriate use of this standard.

REVISION NOTE:	ADOPTED 6/21/2006
DRAWING NAME:	WW03
SCALE: NTS	DATE: 1/2003
DRAWN BY: MRS	APPROVED BY: TRB

CITY OF GEORGETOWN CONSTRUCTION STANDARDS AND DETAILS
STANDARD MANHOLE – SECTION

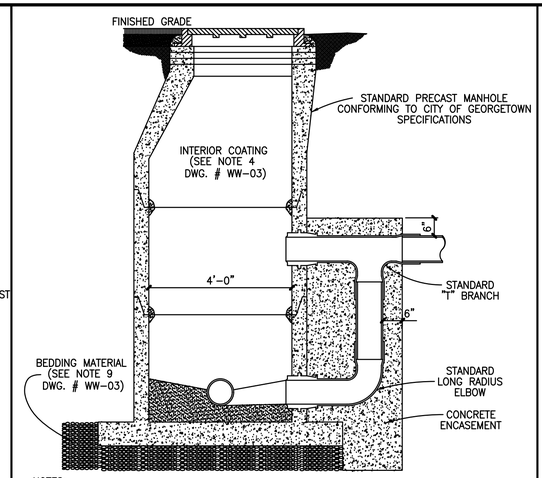

NOTES:
1. CONCRETE ENCASEMENT FOR DROP CONNECTION TO BE POURED INTEGRALLY WITH BOTH MANHOLE SLAB AND WALL.
2. DROP CONNECTIONS SHALL BE REQUIRED WHENEVER AN INFLUENT SEWER IS LOCATED TWO FEET (2') OR MORE ABOVE THE MAIN INVERT CHANNEL.
3. A FLOW CHANNEL SHALL BE CONSTRUCTED INSIDE MANHOLE TO DIRECT INFLUENT INTO FLOW STREAM.
4. WHEN P.V.C. IS USED IN SANITARY SEWER LINES, SOLVENT TYPE JOINT P.V.C. FITTINGS MAY BE UTILIZED IN THE DROP ASSEMBLY ONLY.
5. MINIMUM PIPE SIZE FOR DROP IS EIGHT INCHES (8").
6. SEE STANDARD MANHOLE DETAIL (DWG. # WW–03) FOR ADDITIONAL REQUIREMENTS.

The Architect/Engineer assumes responsibility for appropriate use of this standard.

REVISION NOTE:	ADOPTED 6/21/2006
DRAWING NAME:	WW04
SCALE: NTS	DATE: 1/2003
DRAWN BY: MRS	APPROVED BY: TRB

CITY OF GEORGETOWN CONSTRUCTION STANDARDS AND DETAILS
DROP CONNECTION–PRECAST MANHOLE TYPE "A"

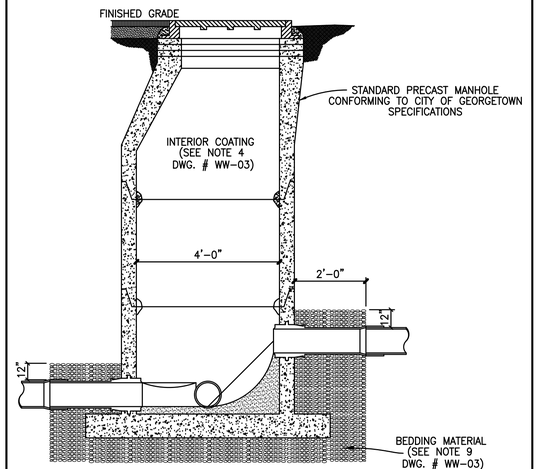

NOTES:
1. TO BE USED WHERE DROP IS SIX INCHES (6") TO TWO FEET (2'–0").
2. A FLOW CHANNEL SHALL BE CONSTRUCTED INSIDE MANHOLE TO DIRECT INFLUENT INTO FLOW STREAM.
3. CONSTRUCTION OF DROP SHALL PROVIDE AN OVERSIZED SLAB TO EXTEND UNDER THE DROP CONNECTION.
4. MINIMUM PIPE SIZE FOR DROP IS EIGHT INCHES (8").
5. SEE STANDARD MANHOLE DETAIL (DWG. # WW–03) FOR ADDITIONAL REQUIREMENTS.

The Architect/Engineer assumes responsibility for appropriate use of this standard.

REVISION NOTE:	ADOPTED 6/21/2006
DRAWING NAME:	WW05
SCALE: NTS	DATE: 1/2003
DRAWN BY: MRS	APPROVED BY: TRB

CITY OF GEORGETOWN CONSTRUCTION STANDARDS AND DETAILS
DROP CONNECTION–PRECAST MANHOLE TYPE "B"

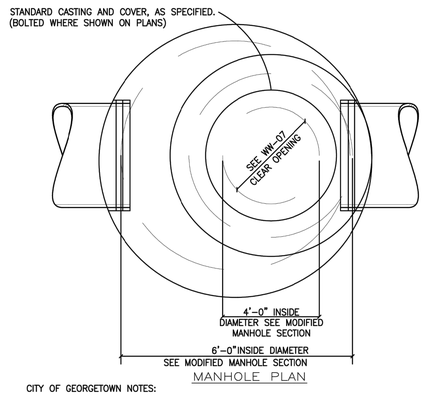

MANHOLE PLAN

CITY OF GEORGETOWN NOTES:

MANHOLE DETAILS SHALL REFLECT THE CITY'S MINIMUM SPECIFICATIONS, AS STATED BELOW:

A. ALL MANHOLES SHALL BE R.C.P., CLASS III, WITH RUBBER PROFILE GASKET – SINGLE OFF–SET JOINT CONFORMING TO ASTM C478, C433 AND C76.
B. ALL MANHOLES SHALL HAVE FRAME AND COVER, AS MANUFACTURED BY EAST JORDAN IRON WORKS (AS PER DETAIL # WW–07) OR APPROVED EQUIVALENT.
C. ALL MANHOLES SHALL BE CONCRETE WITH CAST IRON FRAME AND COVER.
D. ALL MANHOLES SHALL HAVE AN ECCENTRIC CONE.
E. MANHOLES MAY HAVE A FLAT LID, IF APPROVED BY CITY OF GEORGETOWN, BEING 12" THICK WITH A MINIMUM 30" OPENING, AS MANUFACTURED BY HANSEN PIPE AND PRECAST OR APPROVED EQUAL M.F.G. CONFORMING TO ASTM C478, 5000 P.S.I. CONCRETE, TRAFFIC BEARING AND WITH PROFILE GASKET – SINGLE OFF–SET JOINT CONFORMING TO ASTM C443.
F. INVERTS AND FLEXIBLE SEAL BOOTS, PER ASTM C–923, SHALL BE CAST INTO BASE SECTION.
G. UNLESS NOTED OTHERWISE ON PLANS, MINIMUM DROP BETWEEN INVERTS SHALL BE ONE–TENTH OF A FOOT (0.1').
H. GRADE RINGS WITH AN I.D. TO MATCH FRAMES CLEAR OPENING WITH A MAXIMUM ADJUSTMENT OF 12" ARE ALLOWED.

1 STANDARD MANHOLE - PLAN (72")
NOT TO SCALE
MODIFIED DETAIL WW02

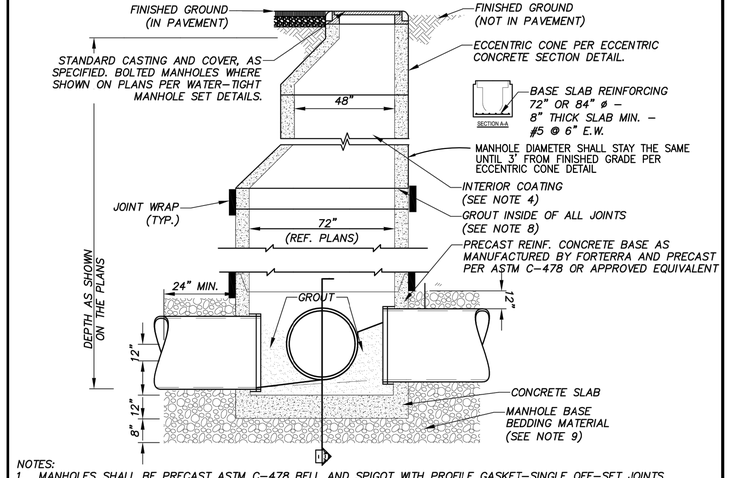

NOTES:
1. MANHOLES SHALL BE PRECAST ASTM C–478 BELL AND SPIGOT WITH PROFILE GASKET–SINGLE OFF–SET JOINTS.
2. SEE PLANS AND MANHOLE SCHEDULE, FOR MANHOLE SIZE, LOCATION, CONFIGURATION, TYPE OF TOP SECTION, VENTING REQUIREMENTS, PIPE SIZE AND TYPES.
3. SEE SPECIFICATIONS ON MATERIALS AND CONSTRUCTION.
4. AN 80 MIL. COAT OF RAVEN LINING SYSTEMS, RAVEN 405 ULTRA HIGH BUILD EXPOXY COATING, OR SPRAY WALL EPOXY COATING, OR APPROVED EQUAL, TO BE APPLIED TO ENTIRE INTERIOR OF EACH WASTEWATER MANHOLE AND UNDERSIDE OF FLAT TOPS.
5. ALL MANHOLE COVERS SHALL BE BOLTED AND GASKETTED WHEN MAHOLES ARE LOCATED OUT FROM PAVEMENT.
6. MANHOLES TO BE VENTED ARE IDENTIFIED ON MANHOLE SCHEDULE. REFERENCE MANHOLE VENT DETAIL.
7. MANHOLES ARE TO BE DESIGNED TO RESIST LATERAL AND VERTICAL SOIL FORCES RESULTING FROM MANHOLE DEPTH. ADDITIONALLY, MANHOLES SHALL BE DESIGNED FOR HS–20 TRAFFIC LOADS.
8. GROUT SHALL MEET THE REQUIREMENTS AS STATED BY THE COATING MANUFACTURERS.
9. MANHOLE BASE BEDDING MATERIAL SPECS. FOR 3–4" WASHED GRAVEL:
   SIEVE SIZE 2", % RETAINED 0 SIEVE SIZE 1 1/2", % RETAINED 0–10
   SIEVE SIZE 1", % RETAINED 45–80 SIEVE SIZE 3/4", % RETAINED 85–100
   SIEVE SIZE 3/8", % RETAINED 95–100

2 STANDARD MANHOLE SECTION
NOT TO SCALE
MODIFIED DETAIL WW03

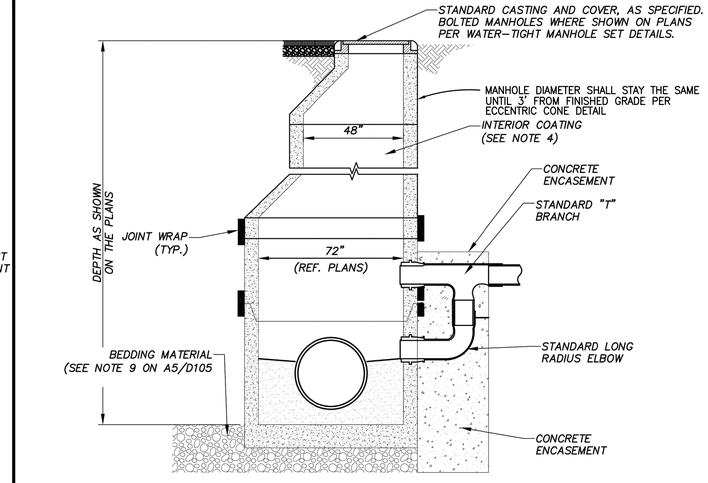

NOTES:
1. CONCRETE ENCASEMENT FOR DROP CONNECTION TO BE POURED INTEGRALLY WITH BOTH MANHOLE SLAB AND WALL.
2. DROP CONNECTIONS SHALL BE REQUIRED WHENEVER AN INFLUENT SEWER IS LOCATED TWO FEET (2') OR MORE ABOVE THE MAIN INVERT CHANNEL.
3. A FLOW CHANNEL SHALL BE CONSTRUCTED INSIDE MANHOLE TO DIRECT INFLUENT INTO FLOW STREAM.
4. WHEN P.V.C. IS USED IN SANITARY SEWER LINES, SOLVENT TYPE JOINT P.V.C. FITTINGS MAY BE UTILIZED IN THE DROP ASSEMBLY ONLY.
5. MINIMUM PIPE SIZE FOR DROP IS EIGHT INCHES (8").
6. SEE MODIFIED MANHOLE DETAIL FOR ADDITIONAL REQUIREMENTS

3 DROP CONNECTION - PRECAST MANHOLE TYPE "A"
NOT TO SCALE
MODIFIED DETAIL WW04

Westwood
Phone (512) 485-0831
Toll Free (888) 937-5150
8701 N. Mopac Expy, Suite 320
Austin, TX 78759
westwoodps.com
Westwood Professional Services, Inc.
TBPE FIRM REGISTRATION NO. F-11756
TBPLS FIRM REGISTRATION NO. LS-10074301

REVISIONS

NO.	DESCRIPTION	DATE	BY

DBC WASTEWATER INTERCEPTOR
CIVIL INFRASTRUCTURE
GEORGETOWN, TEXAS, 78633
GENERAL SANITARY SEWER
UTILITY DETAILS SHEET 1 OF 6

STATE OF TEXAS
JACOB W. VALENTIEN
124993
LICENSED
PROFESSIONAL ENGINEER

THE SEAL APPEARING ON THIS DOCUMENT WAS AUTHORIZED BY SUPERVISION OF JACOB W. VALENTIEN, P.E. 124993 ON 3/4/2024. ALTERATION OF A SEALED DOCUMENT WITHOUT PROPER NOTIFICATION TO THE RESPONSIBLE ENGINEER IS AN OFFENSE UNDER THE TEXAS ENGINEERING PRACTICE ACT.

DESIGN	DRAWN	DATE
JWV	SAG	MAR 2024

SHEET NO.
27
27 OF 66

JVALENTIEN
3/4/2024 10:20 AM
M:\DWG-46\4670-22.676\DWG\CIVIL C3D 2018\02_SHEETS\DETAILS\4670-22.676_DETAILS.DWG

FLOW PATTERNS FOR INVERT CHANNELS

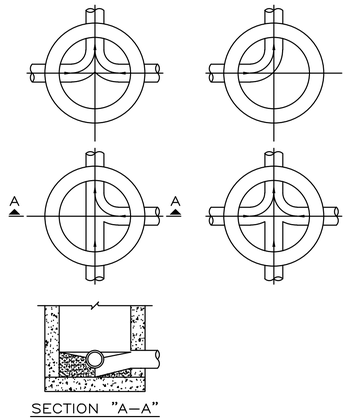

SECTION "A–A"

NOTES:

1. INVERT CHANNELS TO BE CONSTRUCTED FOR SMOOTH FLOW WITH NO OBSTRUCTIONS.
2. SPILLWAYS SHALL BE CONSTRUCTED BETWEEN PIPES WITH DIFFERENT INVERT ELEVATIONS PROVIDING FOR SMOOTH FLOW.
3. CHANNELS FOR FUTURE CONSTRUCTIONS (STUBS) SHALL BE CONSTRUCTED, FILLED WITH SAND, AND COVERED WITH 1" OF MORTAR.
4. SLOPE MANHOLE ITSELF WITH A 1:2 SLOPE FROM MANHOLE WALL TO CHANNEL.
5. INVERT SHALL BE A MINIMUM OF 1/2 THE DIAMETER OF THE LARGEST PIPE OR 4" DEEP.

The Architect/Engineer assumes responsibility for appropriate use of this standard.

CITY OF GEORGETOWN CONSTRUCTION STANDARDS AND DETAILS
FLOW PATTERNS FOR INVERT CHANNELS

REVISION NOTE: ADOPTED 6/21/2006 | DRAWING NAME: WW06 | SCALE: NTS | DATE: 1/2003 | DRAWN BY: MRS | APPROVED BY: TRB

The Architect/Engineer assumes responsibility for appropriate use of this standard.

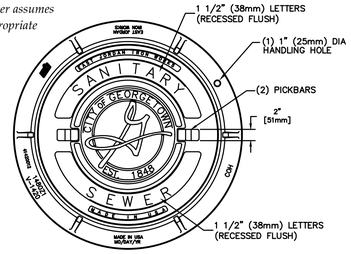

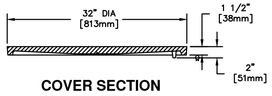

COVER SECTION

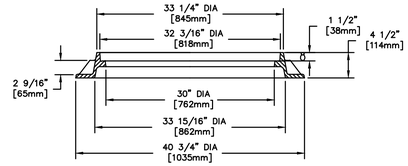

FRAME SECTION

NOTES:

1. STANDARD WASTEWATER MANHOLE SET TO BE EAST JORDAN IRON WORKS, INC. CATALOG NO. 1480A V–1420/1480Z1, COVER TO BE STAMPED WITH "SANITARY SEWER".
2. STANDARD WASTEWATER MANHOLE SET TO BE HEAVY DUTY LOAD RATED.
3. FOR MORE DETAILED SPECIFICATIONS REFER TO EAST JORDAN IRON WORKS, INC. REFERENCE PRODUCT DRAWING 41420012 00148390.
4. FOR BOLTED WASTEWATER MANHOLE SET REFER TO DETAIL WW07A.

CITY OF GEORGETOWN CONSTRUCTION STANDARDS AND DETAILS
STANDARD WASTEWATER MANHOLE SET

REVISION NOTE: ADOPTED 6/21/2006 | DRAWING NAME: WW07 | SCALE: NTS | DATE: 1/2003 | DRAWN BY: MRS | APPROVED BY: TRB

The Architect/Engineer assumes responsibility for appropriate use of this standard.

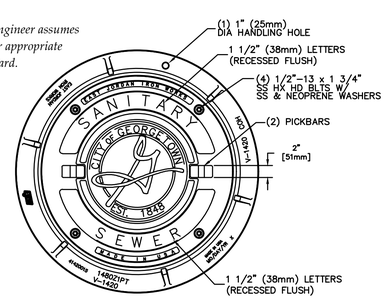

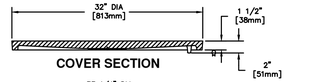

COVER SECTION

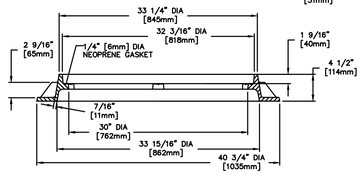

FRAME SECTION

NOTES:

1. BOLTED WASTEWATER MANHOLE SET TO BE EAST JORDAN IRON WORKS, INC. CATALOG NO. 1480APT V–1420/1480Z1PT, COVER TO BE STAMPED WITH "SANITARY SEWER".
2. BOLTED WASTEWATER MANHOLE SET TO BE HEAVY DUTY LOAD RATED.
3. FOR MORE DETAILED SPECIFICATIONS REFER TO EAST JORDAN IRON WORKS, INC. REFERENCE PRODUCT DRAWING 00148392 41420015.
4. FOR STANDARD WASTEWATER MANHOLE SET REFER TO DETAIL WW07.

CITY OF GEORGETOWN CONSTRUCTION STANDARDS AND DETAILS
BOLTED WASTEWATER MANHOLE SET

REVISION NOTE: ADOPTED 6/21/2006 | DRAWING NAME: WW07A | SCALE: NTS | DATE: 1/2006 | DRAWN BY: MRS | APPROVED BY: TRB

The Architect/Engineer assumes responsibility for appropriate use of this standard.

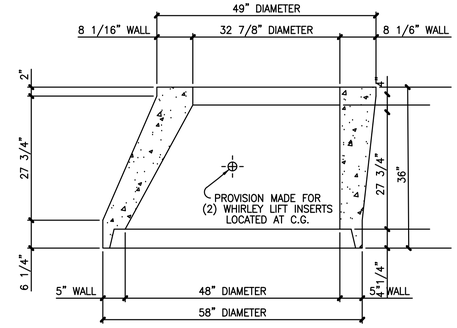

The Architect/Engineer assumes responsibility for appropriate use of this standard.

CITY OF GEORGETOWN CONSTRUCTION STANDARDS AND DETAILS
48"X5" TO 33"X8"X36" TALL ECCENTRIC CONCRETE SECTION

REVISION NOTE: ADOPTED 6/21/2006 | DRAWING NAME: WW08 | SCALE: NTS | DATE: 1/2003 | DRAWN BY: MRS | APPROVED BY: TRB

FLOW PATTERNS FOR INVERT CHANNELS

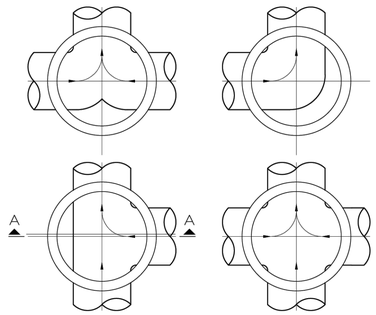

SECTION "A–A"

NOTES:

1. INVERT CHANNELS TO BE CONSTRUCTED FOR SMOOTH FLOW WITH NO OBSTRUCTIONS.
2. SPILLWAYS SHALL BE CONSTRUCTED BETWEEN PIPES WITH DIFFERENT INVERT ELEVATIONS PROVIDING FOR SMOOTH FLOW.
3. CHANNELS FOR FUTURE CONSTRUCTIONS (STUBS) SHALL BE CONSTRUCTED, FILLED WITH SAND, AND COVERED WITH 1" OF MORTAR.
4. SLOPE MANHOLE ITSELF WITH A 1:2 SLOPE FROM MANHOLE WALL TO CHANNEL.
5. INVERTS SHALL BE SPECIFICALLY SIZED FOR CONNECTING PIPES AND SHALL BE U–SHAPED WITH THE MINIMUM DEPTH 3/4 OF THE LARGEST PIPE DIAMETER.

1 FLOW PATTERNS FOR INVERT CHANNELS

NOT TO SCALE

MODIFIED DETAIL WW06

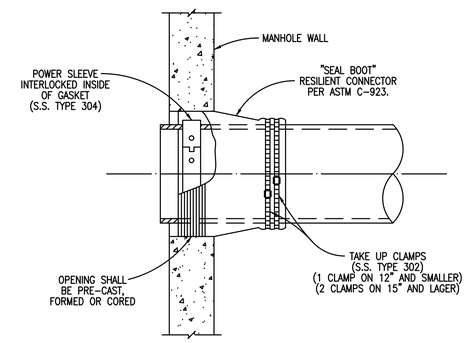

The Architect/Engineer assumes responsibility for appropriate use of this standard.

CITY OF GEORGETOWN CONSTRUCTION STANDARDS AND DETAILS
FLEXIBLE "SEAL BOOT" CONNECTOR

REVISION NOTE: ADOPTED 6/21/2006 | DRAWING NAME: WW10 | SCALE: NTS | DATE: 1/2003 | DRAWN BY: MRS | APPROVED BY: TRB

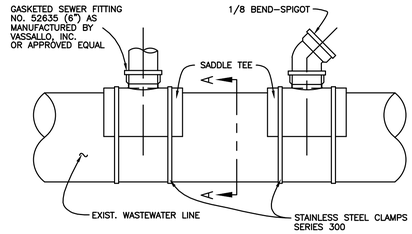

PLAN VIEW

SADDLE TEE				
PART NO.	SIZE	L1	H	P
52635	8"X6"	5.625	5.659	1.448

PLASTIC TRENDS INC. – 1/8 BEND – SPIGOT					
PART NO.	SIZE	A	B	C	D
G 406	6	11.270	6.146	1.870	6.090

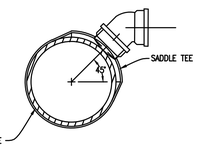

SECTION A–A

NOTES:

1. FLEXIBLE SADDLE TO BE INSTALLED IN ACCORDANCE WITH MANUFACTURER'S REQUIREMENTS.
2. SADDLE TEE SHALL BE ORIENTATED 45° TO MAIN. (SEE SEWER SERVICE CONNECTIONS DETAIL – DWG # WW–13)
3. EXCAVATE AROUND EXISTING 8–INCH PIPE, EXPOSING SUFFICIENT ROOM FOR S.S. CLAMPS.
4. THOROUGHLY CLEAN AND DRY THE MATING SURFACE WITH RAG OR PAPER TOWEL MAKE SURE THEY ARE FREE OF DUST AND MOISTURE.
5. MARK THE SIZE OF THE HOLE TO BE CUT USING THE GASKET SKIRT OR THE SADDLE ITSELF AS THE TEMPLATE.
6. SAW OUT THE SECTION OF THE PIPE WHERE THE SADDLE WILL BE LOCATED, WITH A SABER OR KEY HOLE SAW.
7. TEST TO MAKE SURE SADDLE FITS HOLE PROPERLY.
8. SERVICE PIPE SHALL NOT EXTEND MORE THAN ONE–HALF INCH INTO THE MAIN.
9. PLACE GASKET SKIRT AND SADDLE OVER OPENING AND TIGHTEN BAND CLAMPS EVENLY UNTIL SADDLE IS FIRMLY ATTACHED TO THE PIPE. APPLY PRESSURE ON THE SADDLE AGAINST THE PIPE WHILE TIGHTENING THE CLAMPS AS INDICATED ABOVE. DO NOT OVER TIGHTEN, DO NOT STRIP THREAD.
10. REPLACE THE BEDDING AND BACKFILL IN ACCORDANCE WITH THE TRENCH EMBEDMENT DETAIL.

The Architect/Engineer assumes responsibility for appropriate use of this standard.

CITY OF GEORGETOWN CONSTRUCTION STANDARDS AND DETAILS
GASKETED SEWER FITTING FOR SEWER SERVICE CONNECTIONS TO EXISTING MAINS

REVISION NOTE: ADOPTED 6/21/2006 | DRAWING NAME: WW13A | SCALE: NTS | DATE: 1/2003 | DRAWN BY: MRS | APPROVED BY: TRB

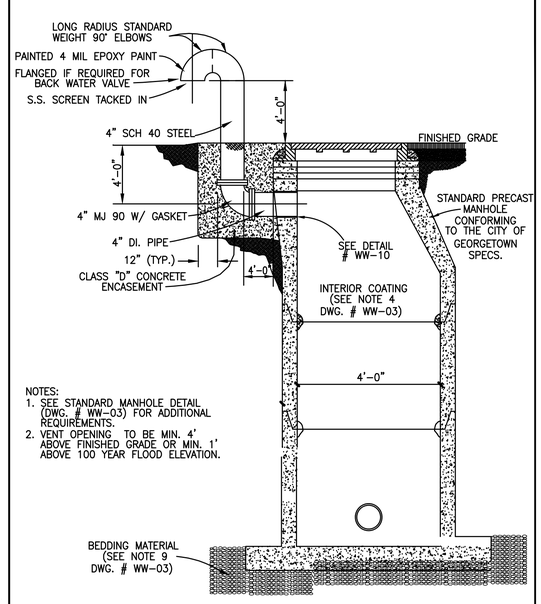

NOTES:
1. SEE STANDARD MANHOLE DETAIL (DWG. # WW–03) FOR ADDITIONAL REQUIREMENTS.
2. VENT OPENING TO BE MIN. 4' ABOVE FINISHED GRADE OR MIN. 1' ABOVE 100 YEAR FLOOD ELEVATION.

The Architect/Engineer assumes responsibility for appropriate use of this standard.

CITY OF GEORGETOWN CONSTRUCTION STANDARDS AND DETAILS
TYPICAL MANHOLE WITH VENT

REVISION NOTE: ADOPTED 6/21/2006 | DRAWING NAME: WW19 | SCALE: NTS | DATE: 11/2003 | DRAWN BY: MRS | APPROVED BY: TRB

Westwood
Phone (512) 485-0831 | 8701 N. Mopac Expy, Suite 320
Toll Free (888) 937-5150 | Austin, TX 78759
westwoodps.com
Westwood Professional Services, Inc.
TBPE FIRM REGISTRATION NO. F-11756
TBPLS FIRM REGISTRATION NO. LS-10074301

REVISIONS

NO.	DESCRIPTION	DATE	BY

DBC WASTEWATER INTERCEPTOR
CIVIL INFRASTRUCTURE
GEORGETOWN, TEXAS, 78633
GENERAL SANITARY SEWER
UTILITY DETAILS SHEET 2 OF 6

STATE OF TEXAS
JACOB W. VALENTIEN
124993
LICENSED PROFESSIONAL ENGINEER

THE SEAL APPEARING ON THIS DOCUMENT WAS AUTHORIZED BY SUPERVISION OF JACOB W. VALENTIEN, P.E. 124993 ON 3/1/2024. ALTERATION OF A SEALED DOCUMENT WITHOUT PROPER NOTIFICATION TO THE RESPONSIBLE ENGINEER IS AN OFFENSE UNDER THE TEXAS ENGINEERING PRACTICE ACT.

DESIGN	DRAWN	DATE
JWV	SAG	MAR 2024

SHEET NO. **28**

28 OF 66

TGLASPER
3/1/2024 6:54 PM
M:\DWG–46\4670–22.676\DWG\CIVIL C3D 2018\02_SHEETS\DETAILS\4670–22.676_DETAILS.DWG

PK–4670–22.676_DETAILS.DWG

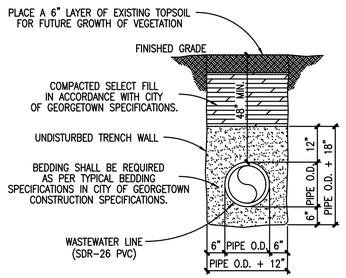

TRENCH WIDTHS
*PIPE LESS THAN 20" DIAMETER
1'-0" + PIPE O.D.
*20" DIAMETER PIPE AND LARGER
2'-0" + PIPE O.D.

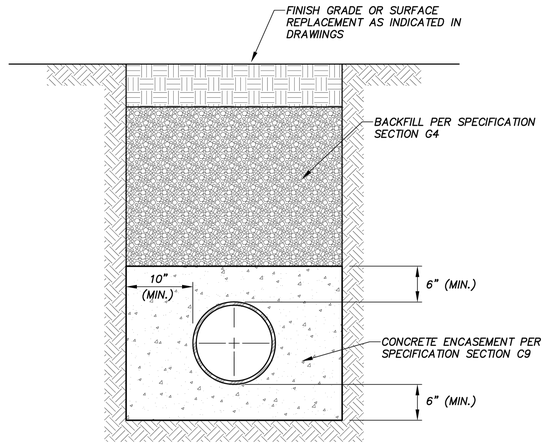

1 CONCRETE ENCASEMENT DETAIL

NOT TO SCALE

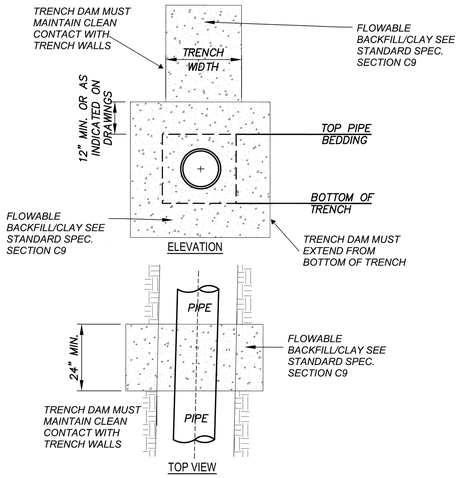

NOTE:
UNLESS OTHERWISE SPECIFIED IN PLANS. FLOWABLE BACKFILL/ CLAY TRENCH DAM SHALL BE CONSTRUCTED WITH DIMENSIONS AS SHOW IN THIS STANDARD

2 TRENCH DAM DETAIL

NOT TO SCALE

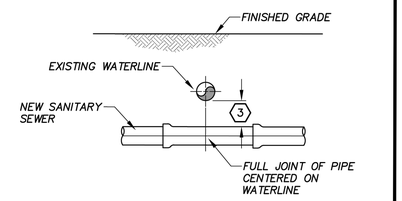

NEW SANITARY SEWER CROSSING EXIST. WATERLINE

KEY NOTES:

1. ALL WATER AND SEWER LINE CONSTRUCTION RUNNING PARALLEL WITH EACH OTHER SHALL MAINTAIN A 9' HORIZONTAL SEPARATION, PIPE WALL TO PIPE WALL.
2. SEPARATION REQUIREMENTS SHOWN HERE DO NOT APPLY TO SERVICE CONNECTIONS – REFER TO INTERNATIONAL PLUMBING CODE FOR APPLICABLE REQUIREMENTS.
3. ALL SEWER AND WATERLINE CROSSINGS SHALL COMPLY WITH THE TCEQ CHAPTER 290, PUBLIC DRINKING WATER SECTION 290.44 WATER DISTRIBUTION, SUB SECTION B, NEW WATERLINE INSTALLATION–CROSSING LINES, PARAGRAPHS (1) THROUGH (I) AND ALL SUB PARAGRAPHS THEREIN.

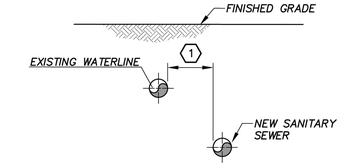

3 WATER & SANITARY SEWER CROSSING

NOT TO SCALE

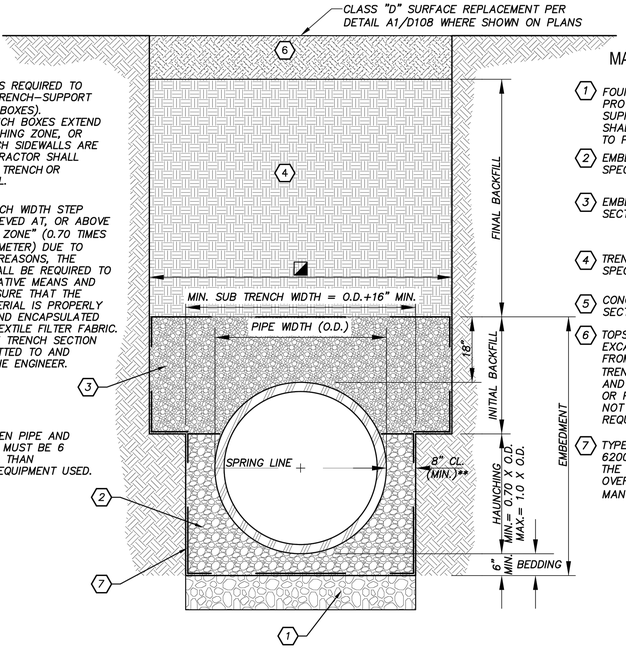

TRENCH WIDTH AS REQUIRED TO ACCOMMODATE TRENCH–SUPPORT SYSTEM(TRENCH BOXES). WHERE THE TRENCH BOXES EXTEND INTO THE HAUNCHING ZONE, OR WHEN THE TRENCH SIDEWALLS ARE UNSTABLE, CONTRACTOR SHALL PROVIDE A WIDE TRENCH OR APPROVED EQUAL.

WHERE THE TRENCH WIDTH STEP CANNOT BE ACHIEVED AT, OR ABOVE THE "HAUNCHING ZONE" (0.70 TIMES THE OUTSIDE DIAMETER) DUE TO TRENCH SAFETY REASONS, THE CONTRACTOR SHALL BE REQUIRED TO PROVIDE ALTERNATIVE MEANS AND METHODS TO ENSURE THAT THE EMBEDMENT MATERIAL IS PROPERLY CONSOLIDATED AND ENCAPSULATED WITHIN THE GEOTEXTILE FILTER FABRIC. THE ALTERNATIVE TRENCH SECTION SHALL BE SUBMITTED TO AND APPROVED BY THE ENGINEER.

** SPACE BETWEEN PIPE AND TRENCH WALL MUST BE 6 INCHES WIDER THAN COMPACTION EQUIPMENT USED.

MATERIAL REQUIREMENTS

1. FOUNDATION COURSE (AS REQUIRED) TO PROVIDE FIRM, STABLE, AND UNIFORM PIPE SUPPORT. FOUNDATION COURSE MATERIAL SHALL BE APPROVED BY ENGINEER PRIOR TO PLACEMENT.
2. EMBEDMENT MATERIAL: PER SPECIFICATION SECTION G4.
3. EMBEDMENT MATERIALS PER SPECIFICATION SECTION G4.
4. TRENCH BACKFILL MATERIAL PER SPECIFICATION SECTION G4.
5. CONCRETE BACKFILL PER SPECIFICATION SECTION G4
6. TOPSOIL, MIN. 12 INCHES THICK, EXCAVATED, SALVAGED, AND STOCKPILED FROM ORIGINAL GROUND SURFACE OF THE TRENCH (AND OR UTILITY EASEMENT) AND REPLACED AFTER INSTALLATION OR PIPELINE. MINIMUM THICKNESS SHALL NOT BE LESS THAN THE THICKNESS REQUIRED IN THE LANDOWNER AGREEMENT.
7. TYPE 1 FILTER FABRIC PER TXDOT DMS 6200 OR APPROVED EQUAL. THE GEOTEXTILE FILTER FABRIC MAY BE OVERLAPPED IN ACCORDANCE WITH THE MANUFACTURER'S RECOMMENDATIONS.

4 TYPICAL TRENCH SECTION FOR LARGE DIA. PIPE

NOT TO SCALE
MODIFIED DETAIL WW 16

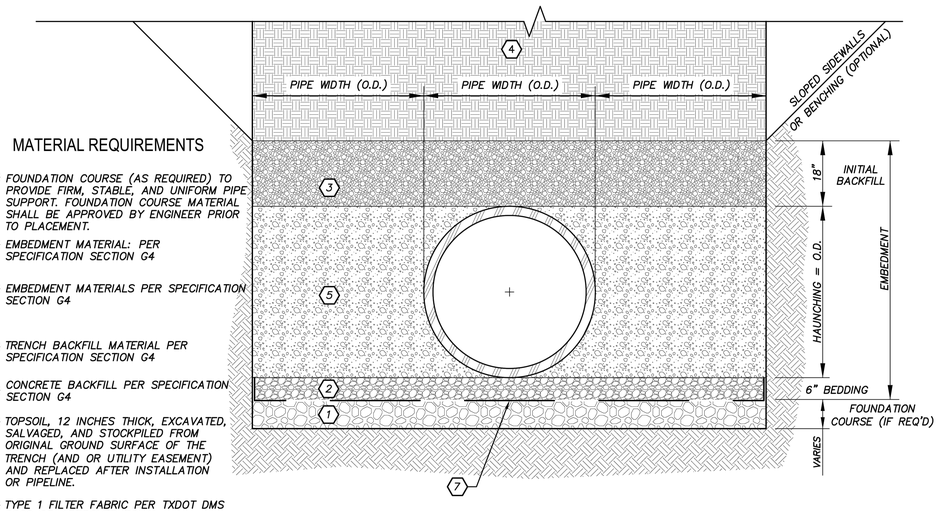

MATERIAL REQUIREMENTS

1. FOUNDATION COURSE (AS REQUIRED) TO PROVIDE FIRM, STABLE, AND UNIFORM PIPE SUPPORT. FOUNDATION COURSE MATERIAL SHALL BE APPROVED BY ENGINEER PRIOR TO PLACEMENT.
2. EMBEDMENT MATERIAL: PER SPECIFICATION SECTION G4
3. EMBEDMENT MATERIALS PER SPECIFICATION SECTION G4
4. TRENCH BACKFILL MATERIAL PER SPECIFICATION SECTION G4
5. CONCRETE BACKFILL PER SPECIFICATION SECTION G4
6. TOPSOIL, 12 INCHES THICK, EXCAVATED, SALVAGED, AND STOCKPILED FROM ORIGINAL GROUND SURFACE OF THE TRENCH (AND OR UTILITY EASEMENT) AND REPLACED AFTER INSTALLATION OR PIPELINE.
7. TYPE 1 FILTER FABRIC PER TXDOT DMS 6200 OR APPROVED EQUAL. THE GEOTEXTILE FILTER FABRIC MAY BE OVERLAPPED IN ACCORDANCE WITH THE MANUFACTURER'S RECOMMENDATIONS.

5 TYPICAL TRENCH SECTION FOR UNSUITABLE SOILS

NOT TO SCALE
MODIFIED DETAIL WW 16

CITY OF GEORGETOWN
CONSTRUCTION STANDARDS AND DETAILS
TRENCH AND EMBEDMENT DETAIL
UNDER NON–PAVED AREAS

REVISION NOTES: ADOPTED 6/21/2006
DRAWING NAME: WW16
ISSUE: NTS
DATE: 1/2003
DRAWN BY: MRS
APPROVED BY: TRB

Westwood
Phone (512) 485-0831
Toll Free (888) 937-5150
8701 N. Mopac Expy, Suite 320
Austin, TX 78759
westwoodps.com
Westwood Professional Services, Inc.
TBPE FIRM REGISTRATION NO. F-11756
TBPLS FIRM REGISTRATION NO. LS-10074301

REVISIONS

NO.	DESCRIPTION	DATE	BY

DBC WASTEWATER INTERCEPTOR
CIVIL INFRASTRUCTURE
GEORGETOWN, TEXAS, 78633
GENERAL SANITARY SEWER
UTILITY DETAILS SHEET 3 OF 6

STATE OF TEXAS
JACOB W. VALENTIEN
124993
LICENSED PROFESSIONAL ENGINEER

THE SEAL APPEARING ON THIS DOCUMENT WAS AUTHORIZED BY SUPERVISION OF JACOB W. VALENTIEN, P.E. 124993 ON 3/1/2024. ALTERATION OF A SEALED DOCUMENT WITHOUT PROPER NOTIFICATION TO THE RESPONSIBLE ENGINEER IS AN OFFENSE UNDER THE TEXAS ENGINEERING PRACTICE ACT.

DESIGN	DRAWN	DATE
JWV	SAG	MAR 2024

SHEET NO.
29
29 OF 66

TGLASPER
3/1/2024 6:54 PM
M:\DWG-46\4670-22.676\DWG\CIVIL C3D 2018\02_SHEETS\DETAILS\4670-22.676_DETAILS.DWG

PK–4670–22.676_DETAILS.DWG

The Architect/Engineer assumes responsibility for appropriate use of this standard.

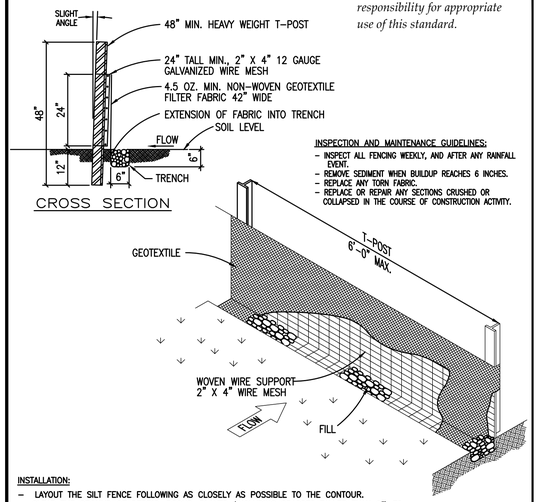

INSPECTION AND MAINTENANCE GUIDELINES:

- INSPECT ALL FENCING WEEKLY, AND AFTER ANY RAINFALL EVENT.
- REMOVE SEDIMENT WHEN BUILDUP REACHES 6 INCHES.
- REPLACE ANY TORN FABRIC.
- REPLACE OR REPAIR ANY SECTIONS CRUSHED OR COLLAPSED IN THE COURSE OF CONSTRUCTION ACTIVITY.

INSTALLATION:

- LAYOUT THE SILT FENCE FOLLOWING AS CLOSELY AS POSSIBLE TO THE CONTOUR.
- CLEAR THE GROUND OF DEBRIS, ROCKS, PLANTS (INCLUDING GRASSES TALLER THAN 2") TO PROVIDE A SMOOTH FLOW APPROACH SURFACE. EXCAVATE 6" DEEP X 6" WIDE TRENCH ON UPSTREAM SIDE OF FACE PER PLANS.
- DRIVE THE HEAVY DUTY T-POST AT LEAST 12 INCHES INTO THE GROUND AND AT A SLIGHT ANGLE TOWARDS THE FLOW.
- ATTACH THE 2" X 4" 12 GAUGE WELDED WIRE MESH TO THE T-POST WITH 11 1/2 GAUGE GALVANIZED T-POST CLIPS. THE TOP OF THE WIRE TO BE 24" ABOVE GROUND LEVEL. THE WELDED WIRE MESH TO BE OVERLAPPED 6" AND TIED AT LEAST 6 TIMES WITH HOG RINGS.
- THE SILT FENCE TO BE INSTALLED WITH A SKIRT A MINIMUM OF 6" WIDE PLACED ON THE UPHILL SIDE OF THE FENCE INSIDE EXCAVATED TRENCH. THE FABRIC TO OVERLAP THE TOP OF THE WIRE BY 1".
- ANCHOR THE SILT FENCE BY BACKFILLING WITH EXCAVATED DIRT AND ROCKS (NOT LARGER THAN 2").
- GEOTEXTILE SPLICES SHOULD BE A MINIMUM OF 18" WIDE ATTACHED IN AT LEAST 6 PLACES. SPLICES IN CONCENTRATED FLOW AREAS WILL NOT BE ACCEPTED.
- SILT FENCE SHALL BE REMOVED WHEN THE SITE IS COMPLETELY STABILIZED SO AS NOT TO BLOCK OR IMPEDE STORM FLOW OR DRAINAGE.

The Architect/Engineer assumes responsibility for appropriate use of this standard.

REVISION NOTE: ADOPTED 6/21/2006

CITY OF GEORGETOWN CONSTRUCTION STANDARDS AND DETAILS
SILT FENCE DETAIL

DRAWING NAME: EC02 | SCALE: NTS | DATE: 1/2003 | DRAWN BY: MRS | APPROVED BY: TRB

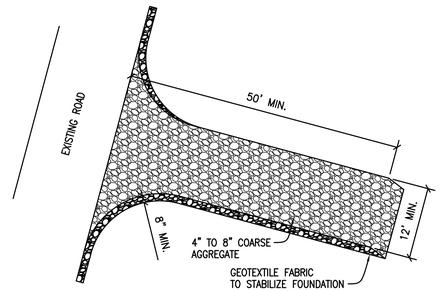

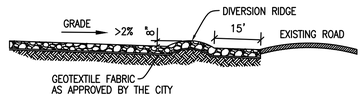

INSTALLATION:

- CLEAR THE AREA OF DEBRIS, ROCKS OR PLANTS THAT WILL INTERFERE WITH INSTALLATION.
- GRADE THE AREA FOR THE ENTRANCE TO FLOW BACK ON TO THE CONSTRUCTION SITE. RUNOFF FROM THE STABILIZED CONSTRUCTION
- PLACE GEOTEXTILE FABRIC AS APPROVED BY THE CITY.
- PLACE ROCK AS APPROVED BY THE CITY.

INSPECTIONS AND MAINTENANCE GUIDELINES:

- THE ENTRANCE SHOULD BE MAINTAINED IN A CONDITION, WHICH WILL PREVENT TRACKING OR FLOWING OF SEDIMENT ONTO PUBLIC RIGHTS-OF-WAY. THIS MAY REQUIRE PERIODIC TOP DRESSING WITH ADDITIONAL STONE AS CONDITIONS DEMAND AND REPAIR AND/OR CLEANOUT OF ANY MEASURES USED TO TRAP SEDIMENT.
- ALL SEDIMENT SPILLED, DROPPED, WASHED OR TRACKED ON TO PUBLIC RIGHTS-OF-WAY SHOULD BE REMOVED IMMEDIATELY BY CONTRACTOR.
- WHEN NECESSARY, WHEELS SHOULD BE CLEANED TO REMOVE SEDIMENT PRIOR TO ENTRANCE ONTO PUBLIC RIGHTS-OF-WAY.
- WHEN WASHING IS REQUIRED, IT SHOULD BE DONE ON AN AREA STABILIZED WITH CRUSHED STONE THAT DRAINS INTO AN APPROVED SEDIMENT TRAP OR SEDIMENT BASIN.
- ALL SEDIMENT SHOULD BE PREVENTED FROM ENTERING ANY STORM DRAIN, DITCH OR WATER COURSE BY USING APPROVED METHODS.

The Architect/Engineer assumes responsibility for appropriate use of this standard.

REVISION NOTE: ADOPTED 6/21/2006

CITY OF GEORGETOWN CONSTRUCTION STANDARDS AND DETAILS
STABILIZED CONSTRUCTION ENTRANCE

DRAWING NAME: EC06 | SCALE: NTS | DATE: 1/2003 | DRAWN BY: MRS | APPROVED BY: TRB

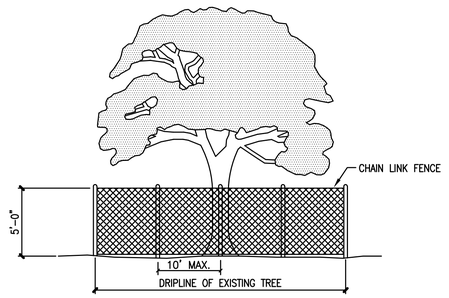

NOTES:

1. TREE PROTECTION FENCES SHALL BE INSTALLED PRIOR TO THE COMMENCEMENT OF ANY SITE PREPARATION WORK (CLEARING, GRUBBING OR GRADING).
2. FENCES SHALL COMPLETELY SURROUND THE TREE, OR CLUSTERS OF TREES; WILL BE LOCATED AT THE OUTERMOST LIMIT OF THE TREE BRANCHES (DRIPLINE), AND WILL BE MAINTAINED THROUGHOUT THE CONSTRUCTION PROJECT IN ORDER TO PREVENT THE FOLLOWING:
   A. SOIL COMPACTION IN THE ROOT ZONE AREA RESULTING FROM VEHICULAR TRAFFIC, OR STORAGE OF EQUIPMENT OR MATERIALS.
   B. ROOT ZONE DISTURBANCES DUE TO GRADE CHANGES (GREATER THAN SIX INCHES (6") CUT OR FILL, OR TRENCHING NOT REVIEWED AND AUTHORIZED BY THE CITY.
   C. WOUNDS TO EXPOSED ROOTS, TRUNKS OR LIMBS BY MECHANICAL EQUIPMENT.
   D. OTHER ACTIVITIES DETRIMENTAL TO TREES, SUCH AS CHEMICAL STORAGE, CEMENT TRUCK CLEANING AND FIRE.
3. EXCEPTIONS TO INSTALLING FENCES AT TREE DRIPLINES MAY BE PERMITTED IN THE FOLLOWING CASES:
   A. WHERE PERMEABLE PAVING IS TO BE INSTALLED, ERECT THE FENCE AT THE OUTER LIMITS OF THE PERMEABLE PAVING AREA.
   B. WHERE TREES ARE CLOSE TO PROPOSED BUILDINGS, ERECT THE FENCE NO CLOSER THAN SIX FEET (6'-0") TO BUILDING.

The Architect/Engineer assumes responsibility for appropriate use of this standard.

REVISION NOTE: ADOPTED 6/21/2006

CITY OF GEORGETOWN CONSTRUCTION STANDARDS AND DETAILS
TREE PROTECTION – CHAIN LINK FENCE

DRAWING NAME: EC09 | SCALE: NTS | DATE: 1/2003 | DRAWN BY: MRS | APPROVED BY: TRB

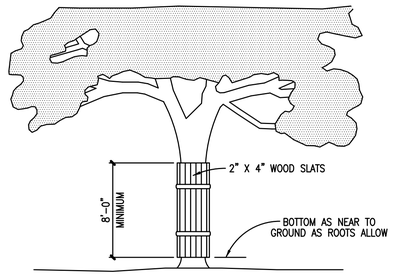

NOTES:

1. WHERE ANY EXCEPTIONS RESULT IN A FENCE BEING CLOSER THAN FOUR FEET (4'-0") TO A TREE TRUNK; PROTECT THE TRUNK WITH STRAPPED-ON-PLANKING TO A HEIGHT OF EIGHT FEET (8'-0"), OR TO THE LIMITS OF LOWER BRANCHING IN ADDITION TO THE REDUCED FENCING PROVIDED.
2. ANY ROOTS EXPOSED BY CONSTRUCTION ACTIVITY SHALL BE PRUNED FLUSH WITH THE SOIL. BACKFILL ROOT AREAS WITH GOOD QUALITY TOP SOIL AS SOON AS POSSIBLE. IF EXPOSED ROOT AREAS ARE NOT BACKFILLED WITHIN TWO (2) DAYS, COVER THEM WITH ORGANIC MATERIAL IN A MANNER WHICH REDUCES SOIL TEMPERATURE, AND MINIMIZES WATER LOSS DUE TO EVAPORATION.
3. PRIOR EXCAVATION OR GRADE CUTTING WITHIN TREE DRIPLINE, MAKE A CLEAN CUT BETWEEN THE DISTURBED AND UNDISTURBED ROOT ZONES WITH A ROCK SAW OR SIMILAR EQUIPMENT, TO MINIMIZE DAMAGE TO REMAINING ROOTS.
4. TREES MOST HEAVILY IMPACTED BY CONSTRUCTION ACTIVITIES SHOULD BE WATERED DEEPLY ONCE A WEEK DURING PERIODS OF HOT, DRY WEATHER. TREE CROWNS SHOULD BE SPRAYED WITH WATER PERIODICALLY TO REDUCE DUST ACCUMULATION ON THE LEAVES.
5. ANY TRENCHING REQUIRED FOR THE INSTALLATION OF LANDSCAPE IRRIGATION SHALL BE PLACED AS FAR FROM EXISTING TREE TRUNKS AS POSSIBLE.
6. NO LANDSCAPE TOPSOIL DRESSING GREATER THE FOUR INCHES (4") SHALL BE PERMITTED WITHIN THE DRIPLINE OF A TREE. NO SOIL IS PERMITTED ON THE ROOT FLARE OF ANY TREE.
7. PRUNING TO PROVIDE CLEARANCE FOR STRUCTURES, VEHICULAR TRAFFIC AND EQUIPMENT SHALL TAKE PLACE BEFORE CONSTRUCTION BEGINS.

The Architect/Engineer assumes responsibility for appropriate use of this standard.

REVISION NOTE: ADOPTED 6/21/2006

CITY OF GEORGETOWN CONSTRUCTION STANDARDS AND DETAILS
TREE PROTECTION – WOOD SLATS

DRAWING NAME: EC10 | SCALE: NTS | DATE: 1/2003 | DRAWN BY: MRS | APPROVED BY: TRB

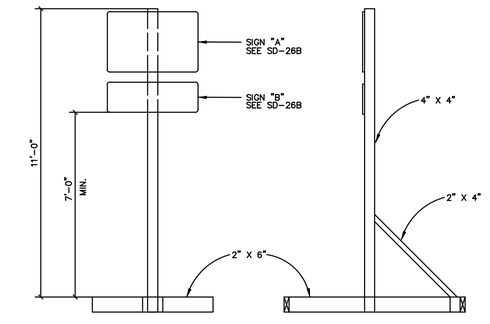

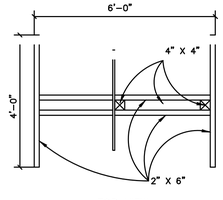

NOTES:

1. ALL MATERIALS SHALL BE FURNISHED BY THE CONTRACTOR WITH THE EXCEPTION OF THE CITY OF GEORGETOWN G.U.S. LOGO WHICH WILL BE FURNISHED BY THE CITY.
2. ALL SIGNS TO BE IN CONFORMANCE WITH THE CURRENT EDITION OF THE TEXAS MANUAL OF UNIFORM TRAFFIC CONTROL DEVICES (TMUTCD).

The Architect/Engineer assumes responsibility for appropriate use of this standard.

REVISION NOTE: ADOPTED 6/21/2006

CITY OF GEORGETOWN CONSTRUCTION STANDARDS AND DETAILS
PROJECT SIGN TYPE II

DRAWING NAME: SD26 | SCALE: NTS | DATE: 1/2003 | DRAWN BY: MRS | APPROVED BY: TRB

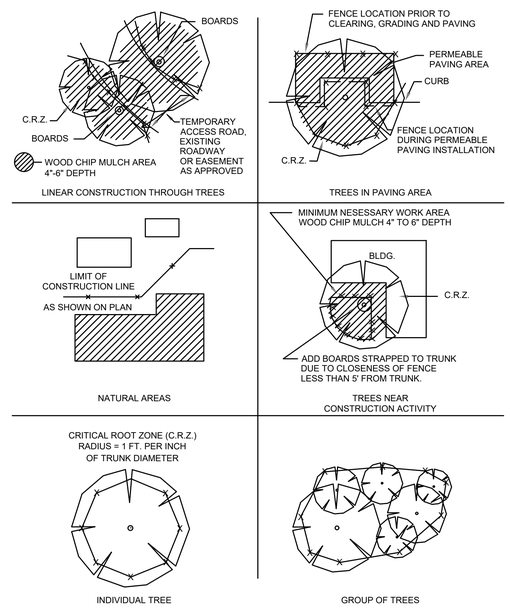

TREE PROTECTION FENCE LOCATIONS

1

NOT TO SCALE

Westwood
Phone (512) 485-0831
Toll Free (888) 937-5150
8701 N. Mopac Expy, Suite 320
Austin, TX 78759
westwoodps.com
Westwood Professional Services, Inc.
TBPE FIRM REGISTRATION NO. F-11756
TBPLS FIRM REGISTRATION NO. LS-10074301

REVISIONS

NO.	DESCRIPTION	DATE	BY

DBC WASTEWATER INTERCEPTOR
CIVIL INFRASTRUCTURE
GEORGETOWN, TEXAS, 78633
GENERAL SANITARY SEWER
UTILITY DETAILS SHEET 4 OF 6

STATE OF TEXAS
JACOB W. VALENTIEN
124993
LICENSED PROFESSIONAL ENGINEER

THE SEAL APPEARING ON THIS DOCUMENT WAS AUTHORIZED BY SUPERVISION OF JACOB W. VALENTIEN, P.E. 124993 ON 3/1/2024. ALTERATION OF A SEALED DOCUMENT WITHOUT PROPER NOTIFICATION TO THE RESPONSIBLE ENGINEER IS AN OFFENSE UNDER THE TEXAS ENGINEERING PRACTICE ACT.

DESIGN	DRAWN	DATE
JWV	SAG	MAR 2024

SHEET NO.
30
30 OF 66

TGLASPER
3/1/2024 6:55 PM
M:\DWG-46\4670-22.676\DWG\CIVIL C3D 2018\02_SHEETS\DETAILS\4670-22.676_DETAILS.DWG

PK-4670-22.676_DETAILS.DWG

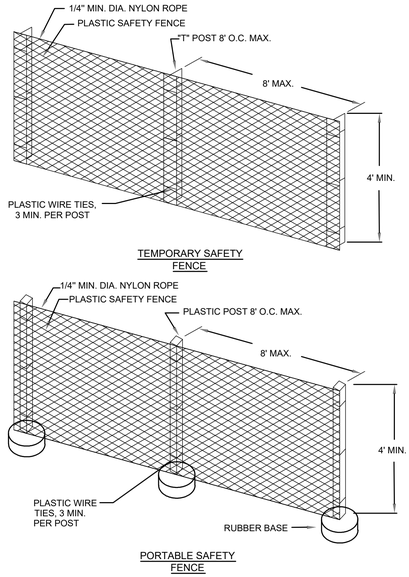

1 SAFETY FENCE 1 OF 2

NOT TO SCALE

NOTES:

1. SAFETY FENCE SHALL BE USED TO PROTECT ALL EXCAVATIONS IN THE RIGHT-OF-WAY.
2. SAFETY FENCES SHALL BE USED TO SEPARATE CONSTRUCTION ACTIVITIES FROM PEDESTRIAN.
3. ALL SAFETY FENCING SHALL BE PLASTIC, 48" MINIMUM HEIGHT AND ORANGE IN COLOR.
4. SAFETY FENCE USED WITHIN THE ROADWAY SHALL BE REFLECTORIZED WITH A MINIMUM OF TWO (2) STRIPS OF RETROREFLECTIVE MATERIAL, A MINIMUM OF 1' WIDE, THE LENGTH OF THE FENCE OR DELINEATED BY CHANNELIZING DEVICES.
5. SAFETY FENCE USED TO SEPARATE SIDEWALKS FROM CONSTRUCTION ACTIVITIES SHALL HAVE MINIMUM ENCROACHMENT TO THE SIDEWALK.
6. AS A MINIMUM, SAFETY FENCING IS REQUIRED IN AREAS ADJACENT TO EXCAVATIONS GREATER THAN OR EQUAL TO 6'.
7. SAFETY FENCING SHALL BE PAID FOR UNDER ITEM 803S, "BARRICADES, SIGNS AND TRAFFIC HANDLING", PAY ITEM NO. 803S-SF.
8. PORTABLE SAFETY FENCE MOUNTS SHALL BE APPROVED BY THE TRANSPORTATION DIVISION PRIOR TO CONSTRUCTION.

2 SAFETY FENCE 2 OF 2

NOT TO SCALE

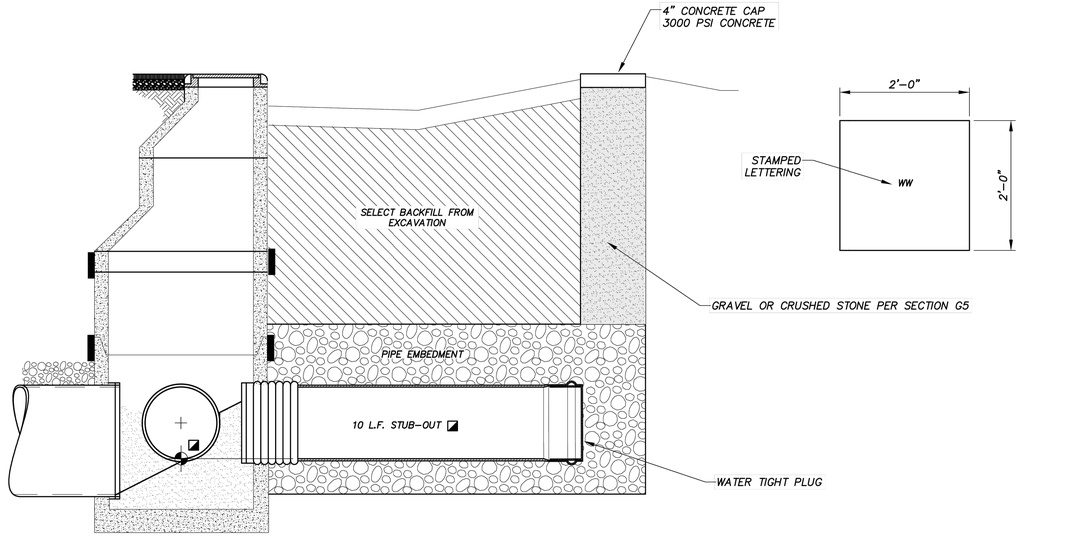

3 WASTEWATER MANHOLE STUB-OUT DETAIL

NOT TO SCALE

1. SANDBAGS MAY BE REPLACED BY A SOIL BERM TO ANCHOR PLASTIC LINING.
2. CONCRETE WASHOUT AREA TO BE CHECKED REGULARLY FOR REPAIRS.
3. REGULARLY REMOVE CONCRETE WASTE TO PREVENT OVERFLOWING.
4. PROVIDE MINIMUM 6 CF OF CONTAINMENT VOLUME FOR EVERY 10 CY OF CONCRETE PLACED. PROVIDE MINIMUM 1' FREEBOARD ABOVE CONTAINMENT VOLUME.

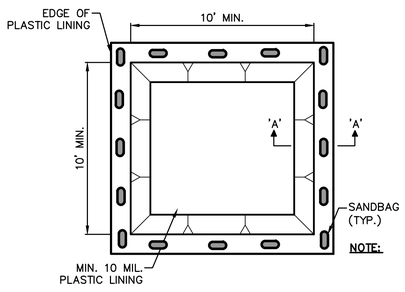

4 CONCRETE WASHOUT AREA

NOT TO SCALE

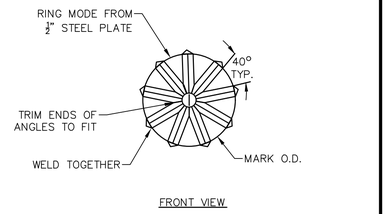

GO, NO GO DEFLECTION TESTING MANDREL

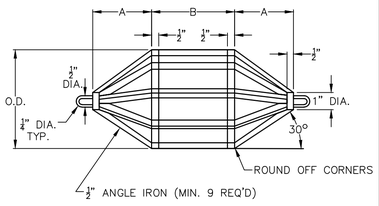

5 DEFLECTION TESTING MANDREL

NOT TO SCALE

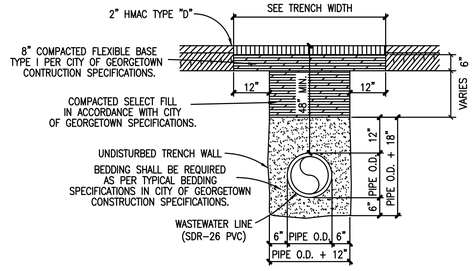

TRENCH WIDTHS
***PIPE LESS THAN 20" DIAMETER**
1'-0" + PIPE O.D.
***20" DIAMETER PIPE AND LARGER**
2'-0" + PIPE O.D.

NOTES:

1. REPLACED BASE MATERIAL OVER DITCH SHALL BE TWICE THE THICKNESS OF THE ORIGINAL BASE.
2. BASE MATERIAL SHALL BE PLACED IN MULTIPLE LIFTS NOT TO EXCEED 6". EACH LAYER SHALL BE THOROUGHLY ROLLED OR TAMPED TO SPECIFIED MAXIMUM DENSITY.
3. ASPHALT CONCRETE PAVEMENT JOINTS SHALL BE MECHANICALLY SAWED.
4. SURFACE MATERIAL WILL BE CONSISTENT WITH THE EXISTING SURFACE.
5. DENSITY TESTS SHALL BE TAKEN IN ACCORDANCE WITH THE CITY OF GEORGETOWN CONSTRUCTION SPECIFICATIONS AND STANDARDS.
6. CONTRACTOR OR ENGINEER MAY USE FLOWABLE BACKFILL AS AN ALTERNATE BACKFILL MATERIAL (SEE C9 FLOWABLE BACKFILL FOR THE SPECIFICATION).

The Architect/Engineer assumes responsibility for appropriate use of this standard.

CITY OF GEORGETOWN TEXAS, Georgetown Utility Systems	CITY OF GEORGETOWN CONSTRUCTION STANDARDS AND DETAILS TRENCH AND EMBEDMENT AND PAVEMENT REPLACEMENT DETAIL UNDER EXISTING ROADWAY	REVISION NOTE: ADOPTED 6/21/2006 DRAWING NAME: WW17 SCALE: NTS DATE: 1/2023 DESIGN BY: MRB APPROVED BY: TBD

Westwood
Phone (512) 485-0831
Toll Free (888) 937-5150
8701 N. Mopac Expy, Suite 320
Austin, TX 78759
westwoodps.com
Westwood Professional Services, Inc.
TBPE FIRM REGISTRATION NO. F-11756
TBPLS FIRM REGISTRATION NO. LS-10074301

REVISIONS

NO.	DESCRIPTION	DATE	BY

DBC WASTEWATER INTERCEPTOR
CIVIL INFRASTRUCTURE
GEORGETOWN, TEXAS, 78633
GENERAL SANITARY SEWER
UTILITY DETAILS SHEET 5 OF 6



THE SEAL APPEARING ON THIS DOCUMENT WAS AUTHORIZED BY SUPERVISION OF JACOB W. VALENTIEN, P.E. 124993 ON 3/1/2024. ALTERATION OF A SEALED DOCUMENT WITHOUT PROPER NOTIFICATION TO THE RESPONSIBLE ENGINEER IS AN OFFENSE UNDER THE TEXAS ENGINEERING PRACTICE ACT.

DESIGN	DRAWN	DATE
JWV	SAG	MAR 2024

SHEET NO. 31

31 OF 66

TGLASPER
3/1/2024 6:55 PM
M:\DWG-46\4670-22.676\DWG\CIVIL C3D 2018\02_SHEETS\DETAILS\4670-22.676_DETAILS.DWG

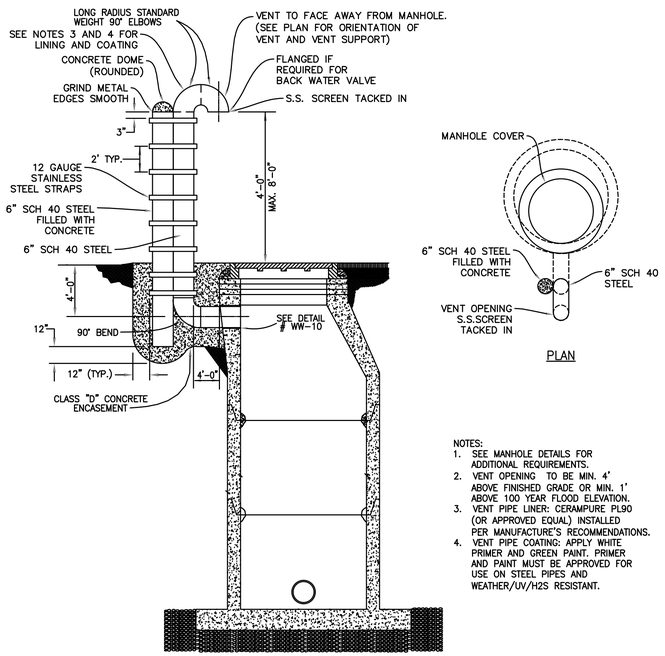

NOTES:
1. SEE MANHOLE DETAILS FOR ADDITIONAL REQUIREMENTS.
2. VENT OPENING TO BE MIN. 4' ABOVE FINISHED GRADE OR MIN. 1' ABOVE 100 YEAR FLOOD ELEVATION.
3. VENT PIPE LINER: CERAMPURE PL90 (OR APPROVED EQUAL) INSTALLED PER MANUFACTURE'S RECOMMENDATIONS.
4. VENT PIPE COATING: APPLY WHITE PRIMER AND GREEN PAINT. PRIMER AND PAINT MUST BE APPROVED FOR USE ON STEEL PIPES AND WEATHER/UV/H2S RESISTANT.

1 TYPICAL MANHOLE WITH VENT 4' - 8'
NOT TO SCALE

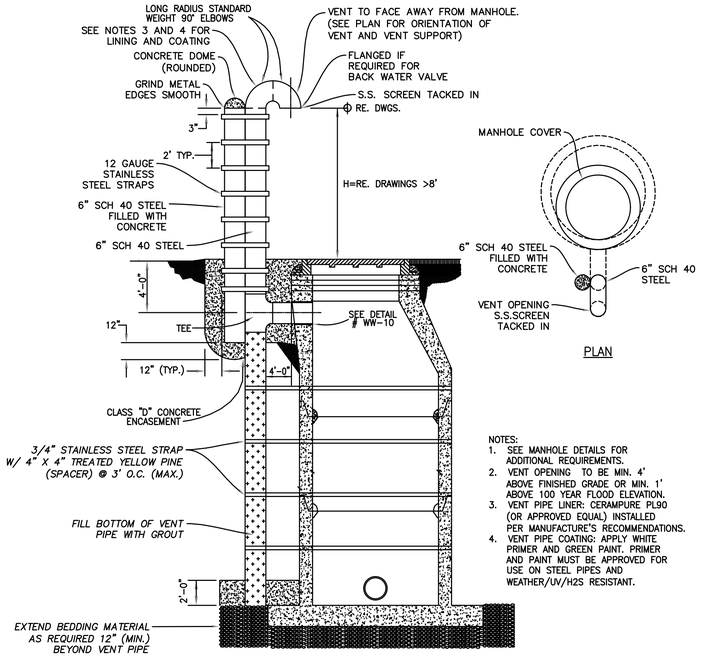

NOTES:
1. SEE MANHOLE DETAILS FOR ADDITIONAL REQUIREMENTS.
2. VENT OPENING TO BE MIN. 4' ABOVE FINISHED GRADE OR MIN. 1' ABOVE 100 YEAR FLOOD ELEVATION.
3. VENT PIPE LINER: CERAMPURE PL90 (OR APPROVED EQUAL) INSTALLED PER MANUFACTURE'S RECOMMENDATIONS.
4. VENT PIPE COATING: APPLY WHITE PRIMER AND GREEN PAINT. PRIMER AND PAINT MUST BE APPROVED FOR USE ON STEEL PIPES AND WEATHER/UV/H2S RESISTANT.

2 TYPICAL MANHOLE WITH VENT > 8'
NOT TO SCALE

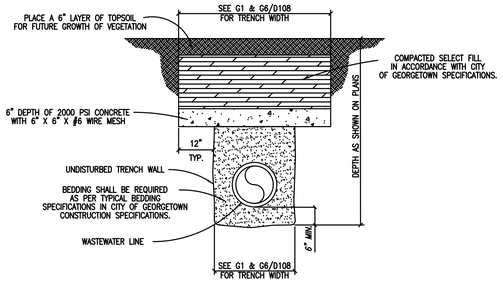

3 CONCRETE TRENCH CAP
NOT TO SCALE

Westwood
Phone (512) 485-0831
Toll Free (888) 937-5150
8701 N. Mopac Expy, Suite 320
Austin, TX 78759
westwoodps.com
Westwood Professional Services, Inc.
TBPE FIRM REGISTRATION NO. F-11756
TBPLS FIRM REGISTRATION NO. LS-10074301

REVISIONS

NO.	DESCRIPTION	DATE	BY

DBC WASTEWATER INTERCEPTOR
CIVIL INFRASTRUCTURE
GEORGETOWN, TEXAS, 78633
GENERAL SANITARY SEWER
UTILITY DETAILS SHEET 6 OF 6



THE SEAL APPEARING ON THIS DOCUMENT WAS AUTHORIZED BY SUPERVISOR OF JACOB W. VALENTIEN, P.E. 124993 ON 3/1/2024. ALTERATION OF A SEALED DOCUMENT WITHOUT PROPER NOTIFICATION TO THE RESPONSIBLE ENGINEER IS AN OFFENSE UNDER THE TEXAS ENGINEERING PRACTICE ACT.

DESIGN	DRAWN	DATE
JWV	SAG	MAR 2024

SHEET NO.
32
32 OF 66

TGLASPER
3/1/2024 6:55 PM
M:\DWG-46\4670-22.676\DWG\CIVIL C3D 2018\02_SHEETS\DETAILS\4670-22.676_DETAILS.DWG

PK-4670-22.676_DETAILS.DWG

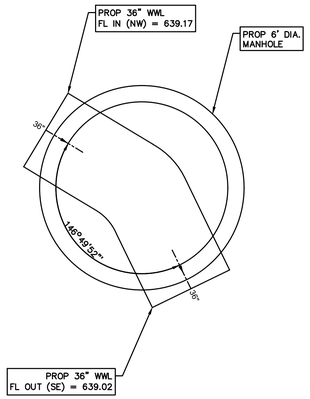

UTIL LINE: WW-1	ID.	MANHOLE INVERT DETAIL	1
STA. 0+00.00			

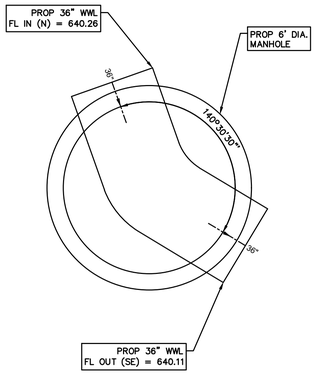

UTIL LINE: WW-1	ID.	MANHOLE INVERT DETAIL	2
STA. 2+90.45			

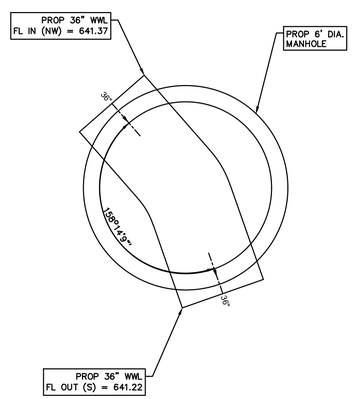

UTIL LINE: WWL-A	ID.	MANHOLE INVERT DETAIL	3
STA. 5+84.31			

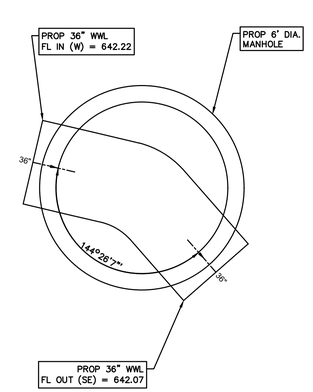

UTIL LINE: WWL-A	ID.	MANHOLE INVERT DETAIL	4
STA. 7+99.16			

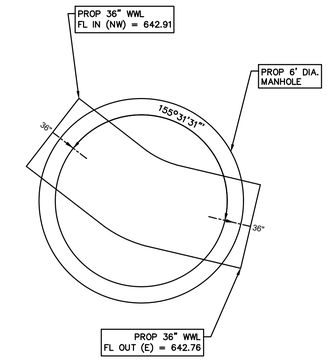

UTIL LINE: WW-1	ID.	MANHOLE INVERT DETAIL	5
STA. 9+65.16			

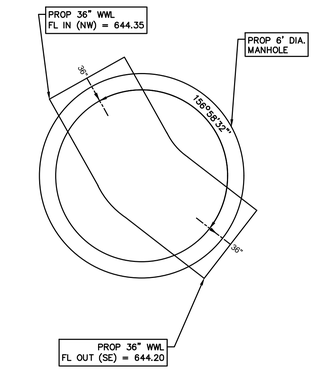

UTIL LINE: WW-1	ID.	MANHOLE INVERT DETAIL	6
STA. 13+61.21			

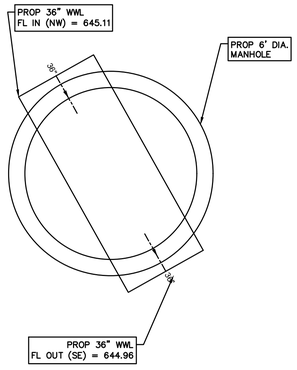

UTIL LINE: WW-1	ID.	MANHOLE INVERT DETAIL	7
STA. 15+49.08			

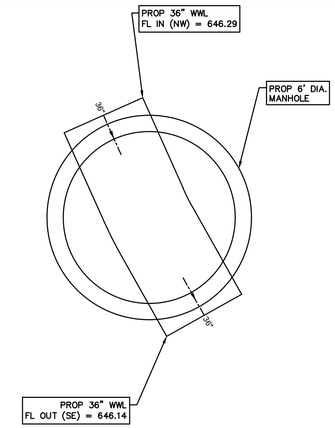

UTIL LINE: WW-1	ID.	MANHOLE INVERT DETAIL	8
STA. 18+67.31			

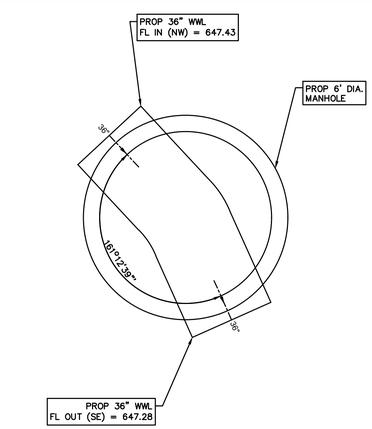

UTIL LINE: WW-1	ID.	MANHOLE INVERT DETAIL	9
STA. 21+70.63			

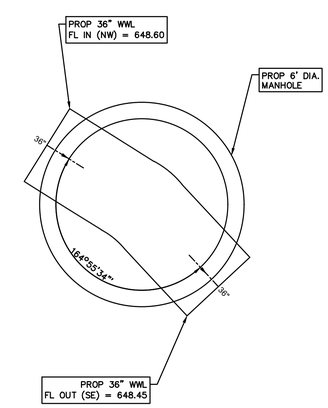

UTIL LINE: WW-1	ID.	MANHOLE INVERT DETAIL	10
STA. 24+84.69			

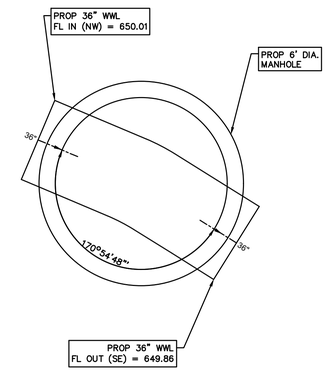

UTIL LINE: WW-1	ID.	MANHOLE INVERT DETAIL	11
STA. 28+72.73			

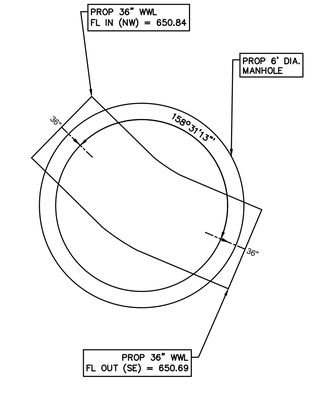

UTIL LINE: WW-1	ID.	MANHOLE INVERT DETAIL	12
STA. 30+81.09			

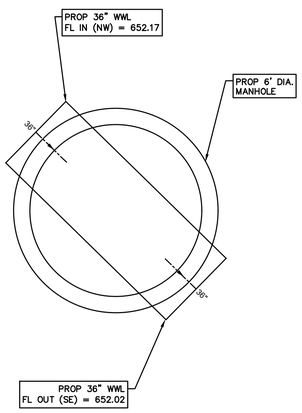

UTIL LINE: WW-1	ID.	MANHOLE INVERT DETAIL	13
STA. 34+44.55			

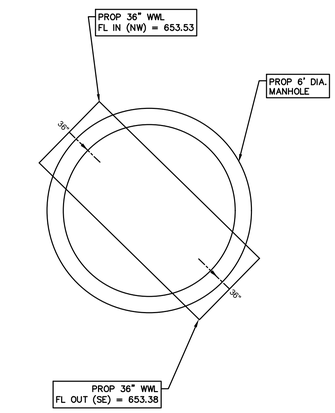

UTIL LINE: WW-1	ID.	MANHOLE INVERT DETAIL	14
STA. 38+18.02			

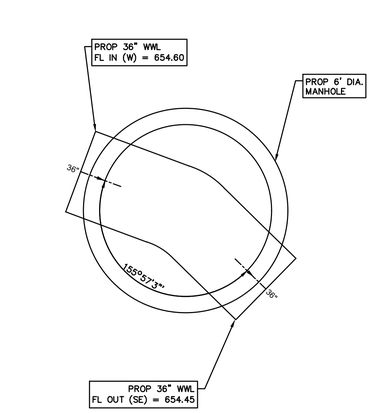

UTIL LINE: WW-1	ID.	MANHOLE INVERT DETAIL	15
STA. 41+01.93			

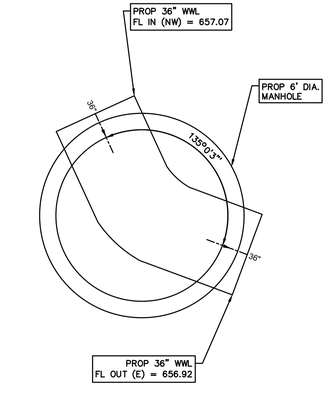

UTIL LINE: WW-1	ID.	MANHOLE INVERT DETAIL	16
STA. 48+15.89			

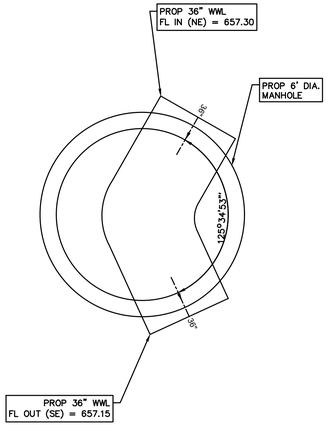

UTIL LINE: WW-1	ID.	MANHOLE INVERT DETAIL	17
STA. 48+40.13			

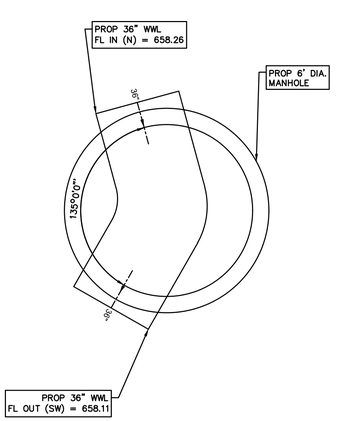

UTIL LINE: WW-1	ID.	MANHOLE INVERT DETAIL	18
STA. 50+89.63			

Westwood

Phone (512) 485-0831
Toll Free (888) 937-5150
8701 N. Mopac Expy, Suite 320
Austin, TX 78759
westwoodps.com

Westwood Professional Services, Inc.
TBPE FIRM REGISTRATION NO. F-11756
TBPLS FIRM REGISTRATION NO. LS-10074301

REVISIONS

NO.	DATE	DESCRIPTION	BY

DBC WASTEWATER INTERCEPTOR
CIVIL INFRASTRUCTURE
GEORGETOWN, TEXAS, 78633
SANITARY SEWER UTILITY INVERT
DETAILS SHEET 1 OF 3

STATE OF TEXAS
JACOB W. VALENTIEN
124993
LICENSED
PROFESSIONAL ENGINEER

THE SEAL APPEARING ON THIS DOCUMENT WAS AUTHORIZED BY SUPERVISION OF JACOB W. VALENTIEN, P.E. 124993 ON 3/1/2024. ALTERATION OF A SEALED DOCUMENT WITHOUT PROPER NOTIFICATION TO THE RESPONSIBLE ENGINEER IS AN OFFENSE UNDER THE TEXAS ENGINEERING PRACTICE ACT.

DESIGN	DRAWN	DATE
JWV	SAG	MAR 2024

SHEET NO.
33
33 OF 66

TGLASPER
3/1/2024 6:55 PM
M:\DWG-46\4670-22.676\DWG\CIVIL C3D 2018\02_SHEETS\DETAILS\4670-22.676_DETAILS-INVERTS.DWG

UTIL LINE: WW-1	ID.	MANHOLE INVERT DETAIL	19
STA. 51+22.64			

UTIL LINE: WW-1	ID.	MANHOLE INVERT DETAIL	20
STA. 51+67.10			

UTIL LINE: WW-1	ID.	MANHOLE INVERT DETAIL	21
STA. 56+09.92			

UTIL LINE: WW-1	ID.	MANHOLE INVERT DETAIL	22
STA. 61+59.92			

UTIL LINE: WW-1	ID.	MANHOLE INVERT DETAIL	23
STA. 64+01.22			

UTIL LINE: WW-1	ID.	MANHOLE INVERT DETAIL	24
STA. 67+07.08			

UTIL LINE: WW-1	ID.	MANHOLE INVERT DETAIL	25
STA. 71+20.99			

UTIL LINE: WW-1	ID.	MANHOLE INVERT DETAIL	26
STA. 75+98.75			

UTIL LINE: WW-1	ID.	MANHOLE INVERT DETAIL	27
STA. 77+20.32			

UTIL LINE: WW-1	ID.	MANHOLE INVERT DETAIL	28
STA. 79+12.60			

UTIL LINE: WW-1	ID.	MANHOLE INVERT DETAIL	29
STA. 83+45.28			

UTIL LINE: WW-1	ID.	MANHOLE INVERT DETAIL	30
STA. 86+55.55			

UTIL LINE: WW-1	ID.	MANHOLE INVERT DETAIL	31
STA. 89+30.22			

UTIL LINE: WW-1	ID.	MANHOLE INVERT DETAIL	32
STA. 92+24.29			

UTIL LINE: WW-1	ID.	MANHOLE INVERT DETAIL	33
STA. 95+43.26			

UTIL LINE: WW-1	ID.	MANHOLE INVERT DETAIL	34
STA. 95+93.88			

UTIL LINE: WW-1	ID.	MANHOLE INVERT DETAIL	35
STA. 97+52.65			

UTIL LINE: WW-1	ID.	MANHOLE INVERT DETAIL	36
STA. 102+36.84			

Westwood

Phone (512) 485-0831
Toll Free (888) 937-5150
8701 N. Mopac Expy, Suite 320
Austin, TX 78759
westwoodps.com

Westwood Professional Services, Inc.
TBPE FIRM REGISTRATION NO. F-11756
TBPLS FIRM REGISTRATION NO. LS-10074301

REVISIONS

NO.	DATE	DESCRIPTION	BY

DBC WASTEWATER INTERCEPTOR
CIVIL INFRASTRUCTURE
GEORGETOWN, TEXAS, 78633
SANITARY SEWER UTILITY INVERT
DETAILS SHEET 2 OF 3

STATE OF TEXAS
JACOB W. VALENTIEN
124993
LICENSED
PROFESSIONAL ENGINEER

THE SEAL APPEARING ON THIS DOCUMENT WAS AUTHORIZED BY SUPERVISION OF JACOB W. VALENTIEN, P.E. 124993 ON 3/1/2024. ALTERATION OF A SEALED DOCUMENT WITHOUT PROPER NOTIFICATION TO THE RESPONSIBLE ENGINEER IS AN OFFENSE UNDER THE TEXAS ENGINEERING PRACTICE ACT.

DESIGN	DRAWN	DATE
JWV	SAG	MAR 2024

SHEET NO.
34
34 OF 66

TGLASPER
3/1/2024 6:55 PM
M:\DWG-46\4670-22.676\DWG\CIVIL C3D 2018\02_SHEETS\DETAILS\4670-22.676_DETAILS-INVERTS.DWG

UTIL LINE: WW-1	ID.	MANHOLE INVERT DETAIL	37
STA. 106+10.29			

UTIL LINE: WW-1	ID.	MANHOLE INVERT DETAIL	38
STA. 108+11.77			

UTIL LINE: WW-1	ID.	MANHOLE INVERT DETAIL	39
STA. 108+42.97			

UTIL LINE: WW-1	ID.	MANHOLE INVERT DETAIL	40
STA. 109+33.47			

UTIL LINE: WW-1	ID.	MANHOLE INVERT DETAIL	41
STA. 109+60.67			

UTIL LINE: WW-1	ID.	MANHOLE INVERT DETAIL	42
STA. 112+95.77			

UTIL LINE: WW-1	ID.	MANHOLE INVERT DETAIL	43
STA. 116+19.23			

UTIL LINE: WW-1	ID.	MANHOLE INVERT DETAIL	44
STA. 116+62.13			

UTIL LINE: WW-1	ID.	MANHOLE INVERT DETAIL	45
STA. 120+89.54			

UTIL LINE: WW-1	ID.	MANHOLE INVERT DETAIL	46
STA. 124+77.60			

UTIL LINE: WW-1	ID.	MANHOLE INVERT DETAIL	47
STA. 128+39.55			

UTIL LINE: WW-1	ID.	MANHOLE INVERT DETAIL	48
STA. 132+28.13			

Westwood
Phone (512) 485-0831
Toll Free (888) 937-5150
8701 N. Mopac Expy, Suite 320
Austin, TX 78759
westwoodps.com
Westwood Professional Services, Inc.
TBPE FIRM REGISTRATION NO. F-11756
TBPLS FIRM REGISTRATION NO. LS-10074301

REVISIONS

NO.	DESCRIPTION	DATE	BY

DBC WASTEWATER INTERCEPTOR
CIVIL INFRASTRUCTURE
GEORGETOWN, TEXAS, 78633
SANITARY SEWER UTILITY INVERT DETAILS SHEET 3 OF 3

STATE OF TEXAS
JACOB W. VALENTIEN
124993
LICENSED
PROFESSIONAL ENGINEER

THE SEAL APPEARING ON THIS DOCUMENT WAS AUTHORIZED BY SUPERVISION OF JACOB W. VALENTIEN, P.E. 124993 ON 3/1/2024. ALTERATION OF A SEALED DOCUMENT WITHOUT PROPER NOTIFICATION TO THE RESPONSIBLE ENGINEER IS AN OFFENSE UNDER THE TEXAS ENGINEERING PRACTICE ACT.

DESIGN	DRAWN	DATE
JWV	SAG	MAR 2024

SHEET NO.
35
35 OF 66

TGLASPER
3/1/2024 6:55 PM
M:\DWG-46\4670-22.676\DWG\CIVIL C3D 2018\02_SHEETS\DETAILS\4670-22.676_DETAILS-INVERTS.DWG

PK-4670-22.676_DETAILS-INVERTS.DW

Westwood

Attachment 9 - Technical Specifications

SECTION 000101

DRY BERRY CREEK WASTEWATER INTERCEPTOR SPECIFICATIONS

Westwood

TX REG. ENGINEERING FIRM F-11756
TX REG. SURVEYING FIRM LS-10074301
8701 N Mopac Expy Suite 320, Austin, Texas 78759
(512) 485-0831 Fax (972) 235-9544 www.westwoodps.com

WESTWOOD PROJECT NO. 0040679.00

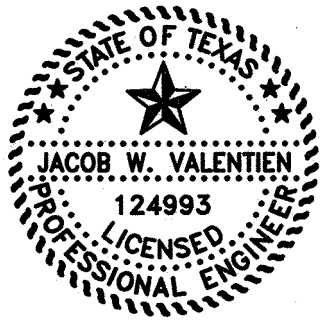

3-11-2024

PART 1 GENERAL

1.01 PROJECT IDENTIFICATION

A. The Owner, hereinafter referred to as Owner: Jackson Shaw Company

1.02 PROJECT DESCRIPTION

A. Summary Project Description: To provide wastewater serves to the new development in the areas surrounding Dry Berry Creek in the City of Georgetown by installing a 36”, 12”, and 8” sewer interceptor. This interceptor will tie into the existing Berry Creek Interceptor (designed by others).

1.03 PROCUREMENT TIMETABLE

A. The Owner reserves the right to change the schedule or terminate the entire procurement process at any time.

1.04 PROCUREMENT DOCUMENTS

A. Availability of Documents: Complete sets of procurement documents may be obtained:
   1. From Owner at the Project Manager's email address: Jacob.Valentien@westwoodps.com.

PART 2 PRODUCTS – Not Used

PART 3 EXECUTION – Not Used

END OF SECTION

SECTION	ITEM	PAGES

DIVISION 00 - PROCUREMENT AND CONTRACTING REQUIREMENTS

000101	PROJECT TITLE PAGE	1-1
000102	PROJECT INFORMATION	1-1
000110	TABLE OF CONTENTS	1-2
004200	BID FORM (TO BE ADDED AT A LATER DATE)	1-1
005100	NOTICE OF AWARD (TO BE ADDED AT A LATER DATE)	1-1
005500	NOTICE TO PROCEED (TO BE ADDED AT A LATER DATE)	1-1
006110	PERFORMANCE BOND (TO BE ADDED AT A LATER DATE)	1-1
006115	PAYMENT BOND (TO BE ADDED AT A LATER DATE)	1-1
006250	CERTIFICATE OF SUBSTANTIAL COMPLETION	1-1
006300	CERTIFICATE OF FINAL COMPLETION	1-1
007200	GENERAL CONDITIONS OF AGREEMENT	1-71
007300	SUPPLEMENTARY CONDITIONS	1-12
009310	REQUEST FOR INFORMATION	1-1
009410	CHANGE ORDER (TO BE ADDED AT A LATER DATE)	1-1

CITY OF GEORGETOWN SPECIFICATIONS:

GENERAL SPECIFICATIONS

G 1	BARRICADES, SIGNS AND TRAFFIC HANDLING	1-1
G 2	SITE PREPARATION	1-2
G 3	SITE CLEARING	1-2
G 4	PIPE EXCAVATION, TRENCHING EMBEDMENT, ENCASEMENT AND BACKFILLING	1-5
G 5	GRANULAR FILL MATERIALS	1-1
G 6	SEDIMENTATION AND TEMPORARY EROSION CONTROL	1-6
G 7	LOAMING, HYDROSEEDING AND PERMANENT EROSION CONTROL	1-5
G 8	MISCELLANIOUS WORK AND CLEANUP	1-2

STANDARD CAPITAL IMPROVEMENT PROJECT SPECIFICATIONS

CIP 4	SITE CONDITIONS	1-3
CIP 6	CONTROL OF WORK	1-4
CIP 7	CONTROL OF MATERIALS	1-1

WASTEWATER SPECIFICATIONS

WW 1	CONCRETE MANHOLES	1-5
WW 2	POLYVINL CHLORIDE (PVC) PIPE	1-3
WW 3	CONNECTIONS TO AND WORK ON EXISTING WASTEWATER SYSTEM	1-1

SPECIAL PROVISIONS TO STANDARD SPECIFICATIONS:

DIVISION 01 - GENERAL REQUIREMENTS

010001	DEFINITIONS AND TERMINOLOGY	1-4

010101 SUMMARY OF WORK 1-2
010901 GENERAL INSTALLATION REQUIREMENTS 1-1
011450 USE OF PREMISES 1-3
012700 MEASUREMENT AND PAYMENT 1-3
012920 SCHEDULE OF VALUES 1-2
013120 MEETINGS 1-3
013216 CONSTRUCTION SCHEDULE 1-3
013233 CONSTRUCTION PHOTOGRAPHS 1-4
013300 SUBMITTAL PROCEDURES 1-3
013400 SHOP DRAWINGS, PRODUCT DATA, AND SAMPLES 1-2
013500 PROJECT REPRESENTATIVE 1-4
014520 INSPECTION SERVICES 1-1
014534 TESTING LABORATORY SERVICES 1-2
015000 TEMPORARY FACILITIES 1-2
015020 MOBILIZATION 1-1
015740 REINFORCED FILTER FABRIC BARRIER 1-3
015750 STABILIZED CONSTRUCTION EXIT 1-3
015780 CONTROL OF GROUND AND SURFACE WATER 1-8
016000 PRODUCT SELECTION AND REQUIREMENTS 1-5
017250 FIELD SURVEYING 1-2
017419 WASTE MATERIAL DISPOSAL 1-1
017423 SITE RESTORATION 1-2
017550 STARTING SYSTEMS 1-1
017700 CLOSEOUT PROCEDURES 1-2

DIVISION 02 - SITE WORK

022210 REMOVING EXISTING PAVEMENTS AND STRUCTURES 1-3
023160 EXCAVATION AND BACKFILL FOR STRUCTIRES 1-1
023170 EXCAVATION AND BACKFILL FOR UTILITIES 1-11
023200 UTILITY BACKFILL MATERIALS 1-10
023620 CONCRETE TRUCK WASHOUT STRUCTURES 1-3
024150 DEMOLITION 1-4
025060 POLYVINYL CHLORIDE PIPE 1-4
025310 GRAVITY SANITARY SEWERS 1-5
025330 ACCEPTANCE TESTING FOR SANITARY SEWERS 1-12

DIVISION 03 - CONCRETE

031000 CONCRETE FORMWORK 1-10
031300 CONCRETE REINFORCEMENT 1-5
032100 REINFORCING STEEL 1-8
031510 JOINTS IN CONCRETE STRUCTURES 1-4
033150 CONCRETE FOR UTILITY CONSTRUCTION 1-16
033160 EXCAVATION AND BACKFILL FOR STRUCTURES 1-8
033160 CONCRETE FINISHING 1-11
033900 CONCRETE CURING 1-4
036000 GROUTING 1-2

SCHNABEL SPECIFICATIONS

33 05 37.01
Centrifugally Cast Fiberglass Reinforced Polymer Mortar Pipe (CCFRPM) For Direct Bury 1-6
33 05 37.02
Centrifugally Cast Fiberglass Reinforced Polymer Mortar Pipe (CCFRPM) For Tunnel Carrier Installation.1-6
33 05 37.03
Centrifugally Cast Fiberglass Reinforced Polymer Mortar Pipe (CCFRPM) For Jacking Installation.....1-6
33 30 02 Trenchless Excavation by Tunnel Boring Machine 1-10
33 30 03 Trenchless Excavation by Micro Tunnel Boring Machine.....1-11
33 30 04 Trenchless Excavation by Hand Tunneling 1-10
33 73 15 Shafts.....1-10

APPENDIX

A. GEOTECHNICAL REPORT

CONTRACTOR TO PROVIDE AT A LATER DATE

CONTRACTOR TO PROVIDE AT A LATER DATE

CONTRACTOR TO PROVIDE AT A LATER DATE

CONTRACTOR TO PROVIDE AT A LATER DATE

OWNER:	**JACKSON SHAW COMPANY**
CONTRACTOR:	
ENGINEER:	**WESTWOOD PROFESSIONAL SERVICES**
ENGINEER ADDRESS:	**8701 N. MOPAC EXPY, SUITE 320 AUSTIN, TEXAS 78759**
PROJECT NO.:	**4670-22.676**
PROJECT:	**DRY BERRY CREEK WASTEWATER INTERCEPTOR PROJECT**

This Certificate of Substantial Completion applies to:

☐ All Work ☐ The following specified portions of the Work:

DATE OF SUBSTANTIAL COMPLETION

The Work to which this Certificate applies has been inspected by authorized representatives of Owner, Contractor, and Engineer, and found to be substantially complete. The Date of Substantial Completion of the Work or portion thereof designated above is hereby established, subject to the provisions of the Contract pertaining to Substantial Completion. The date of Substantial Completion in the final Certificate of Substantial Completion marks the commencement of the contractual correction period and applicable warranties required by the Contract.

A punch list of items to be completed or corrected is attached to this Certificate. This list may not be all-inclusive, and the failure to include any items on such list does not alter the responsibility of the Contractor to complete all Work in accordance with the Contract.

The responsibilities between Owner and Contractor for security, operation, safety, maintenance, heat, utilities, insurance, and warranties upon Owner's use or occupancy of the Work shall be as provided in the Contract, except as amended as follows:

Amendments to Owner's responsibilities: ☐ None ☐ As follows

Amendments to Contractor's responsibilities: ☐ None ☐ As follows:

The following documents are attached to and made a part of this Certificate:

☐ Contractor’s Request for Substantial Completion ☐ 1-Year Warranty Letter ☐ Punch List

This Certificate does not constitute an acceptance of Work not in accordance with the Contract Documents, nor is it a release of Contractor's obligation to complete the Work in accordance with the Contract.

RECOMMENDED BY ENGINEER:

By: _____
(Authorized signature)

Title: _____

Date: _____

_____
Professional Engineers Seal

OWNER:	**JACKSON SHAW COMPANY**
ENGINEER:	**WESTWOOD PROFESSIONAL SERVICES**
ENGINEER ADDRESS:	**8701 N. MOPAC EXPY, SUITE 320 AUSTIN, TEXAS 78759**
PROJECT NO.:	**4670-22.676**
PROJECT:	**WASTEWATER INTERCEPTOR PROJECT**

This Certificate of Final Completion applies to All Work.

_____

DATE OF FINAL COMPLETION

The Work to which this Certificate applies has been inspected by authorized representatives of Owner, Contractor, and Engineer, and found to be Complete. The Date of Final Completion of the Work hereby established, subject to the provisions of the Contract pertaining to Final Completion.

The following documents are attached to and made a part of this Certificate:

☐ Final Pay Application ☐ Certificate of Substantial Completion ☐ Contractor Requests for Final Completion

I certify that this project was 100% complete on the date mentioned above; that the project was under periodic observation for the project duration; that all observation of the work was performed by or under the supervision of Jacob W. Valentien, Registered Professional Engineer; that to the best of my knowledge the project was in accordance with and includes all items in plans and specifications approved by all authorities having jurisdiction.

This Certificate does not constitute an acceptance of Work not in accordance with the Contract Documents, nor is it a release of Contractor's obligation to complete the Work in accordance with the Contract.

RECOMMENDED BY ENGINEER:

By:_____

_____
Date

APPROVED BY OWNER:

Professional Engineers Seal

By:_____

_____
Date

This document has important legal consequences; consultation with an attorney is encouraged with respect to its use or modification. This document should be adapted to the particular circumstances of the contemplated Project and the controlling Laws and Regulations.

STANDARD GENERAL CONDITIONS OF THE CONSTRUCTION CONTRACT

Prepared by

EJCDC®
ENGINEERS JOINT CONTRACT DOCUMENTS COMMITTEE

Issued and Published Jointly by

ACEC
AMERICAN COUNCIL OF ENGINEERING COMPANIES

ASCE
AMERICAN SOCIETY OF CIVIL ENGINEERS

National Society of Professional Engineers®

EJCDC® C-700, Standard General Conditions of the Construction Contract.
Copyright © 2013 National Society of Professional Engineers, American Council of Engineering Companies, and American Society of Civil Engineers. All rights reserved.

These General Conditions have been prepared for use with the Agreement Between Owner and Contractor for Construction Contract (EJCDC® C-520, Stipulated Sum, or C-525, Cost-Plus, 2013 Editions). Their provisions are interrelated and a change in one may necessitate a change inthe other.

To prepare supplementary conditions that are coordinated with the General Conditions, use EJCDC's Guide to the Preparation of Supplementary Conditions (EJCDC® C-800, 2013 Edition). The full EJCDC Construction series of documents is discussed in the Commentary on the 2013 EJCDC Construction Documents (EJCDC® C-001, 2013 Edition).

Copyright © 2013:

National Society of Professional Engineers
1420 King Street, Alexandria, VA 22314-2794
(703) 684-2882
www.nspe.org

American Council of Engineering Companies
1015 15th Street N.W., Washington, DC 20005
(202) 347-7474
www.acec.org

American Society of Civil Engineers
1801 Alexander Bell Drive, Reston, VA 20191-4400
(800) 548-2723
www.asce.org

The copyright for this document is owned jointly by the three sponsoring organizations listed above. The National Society of Professional Engineers is the Copyright Administrator for the EJCDC documents; please direct all inquiries regarding EJCDC copyrights to NSPE.

NOTE: EJCDC publications may be purchased at www.ejcdc.org, or from any of the sponsoring organizations above.

Copyright © 2013 National Society of Professional Engineers, American Council of Engineering Companies, and American Society of Civil Engineers. All rights reserved.

STANDARD GENERAL CONDITIONS OF THE CONSTRUCTION CONTRACT

TABLE OF CONTENTS

Page

Article 1 – Definitions and Terminology 1

1.01 Defined Terms 1

1.02 Terminology 5

Article 2 – Preliminary Matters 6

2.01 Delivery of Bonds and Evidence of Insurance 6

2.02 Copies of Documents 7

2.03 Before Starting Construction 7

2.04 Preconstruction Conference; Designation of Authorized Representatives 7

2.05 Initial Acceptance of Schedules 7

2.06 Electronic Transmittals 8

Article 3 – Documents: Intent, Requirements, Reuse 8

3.01 Intent 8

3.02 Reference Standards 9

3.03 Reporting and Resolving Discrepancies 9

3.04 Requirements of the Contract Documents 10

3.05 Reuse of Documents 10

Article 4 – Commencement and Progress of the Work 11

4.01 Commencement of Contract Times; Notice to Proceed 11

4.02 Starting the Work 11

4.03 Reference Points 11

4.04 Progress Schedule 11

4.05 Delays in Contractor's Progress 12

Article 5 – Availability of Lands; Subsurface and Physical Conditions; Hazardous Environmental Conditions 13

5.01 Availability of Lands 13

5.02 Use of Site and Other Areas. 13

5.03 Subsurface and Physical Conditions 14

5.04 Differing Subsurface or Physical Conditions 15

5.05 Underground Facilities 16

5.06 Hazardous Environmental Conditions at Site 18

Copyright © 2013 National Society of Professional Engineers, American Council of Engineering Companies, and American Society of Civil Engineers. All rights reserved.

Article 6 – Bonds and Insurance 20
6.01 Performance, Payment, and Other Bonds 20
6.02 Insurance—General Provisions 21
6.03 Contractor's Insurance 22
6.04 Owner's Liability Insurance 24
6.05 Property Insurance 25
6.06 Waiver of Rights 26
6.07 Receipt and Application of Property Insurance Proceeds 27
Article 7 – Contractor's Responsibilities 28
7.01 Supervision and Superintendence 28
7.02 Labor; Working Hours 28
7.03 Services, Materials, and Equipment 28
7.04 "Or Equals" 29
7.05 Substitutes 30
7.06 Concerning Subcontractors, Suppliers, and Others 32
7.07 Patent Fees and Royalties 33
7.08 Permits 34
7.09 Taxes 34
7.10 Laws and Regulations 34
7.11 Record Documents 35
7.12 Safety and Protection 35
7.13 Safety Representative 36
7.14 Hazard Communication Programs 36
7.15 Emergencies 36
7.16 Shop Drawings, Samples, and Other Submittals 36
7.17 Contractor's General Warranty and Guarantee 39
7.18 Indemnification 39
7.19 Delegation of Professional Design Services 40
Article 8 – Other Work at the Site 41
8.01 Other Work 41
8.02 Coordination 42
8.03 Legal Relationships 42
Article 9 – Owner's Responsibilities 43

Copyright © 2013 National Society of Professional Engineers, American Council of Engineering Companies, and American Society of Civil Engineers. All rights reserved.

9.01 Communications to Contractor 43
9.02 Replacement of Engineer 43
9.03 Furnish Data 43
9.04 Pay When Due 43
9.05 Lands and Easements; Reports, Tests, and Drawings 43
9.06 Insurance 44
9.07 Change Orders 44
9.08 Inspections, Tests, and Approvals 44
9.09 Limitations on Owner's Responsibilities 44
9.10 Undisclosed Hazardous Environmental Condition 44
9.11 Evidence of Financial Arrangements 44
9.12 Safety Programs 44
Article 10 – Engineer's Status During Construction 44
10.01 Owner's Representative 44
10.02 Visits to Site 44
10.03 Project Representative 45
10.04 Rejecting Defective Work 45
10.05 Shop Drawings, Change Orders and Payments 45
10.06 Determinations for Unit Price Work 45
10.07 Decisions on Requirements of Contract Documents and Acceptability of Work 45
10.08 Limitations on Engineer's Authority and Responsibilities 46
10.09 Compliance with Safety Program 46
Article 11 – Amending the Contract Documents; Changes in the Work 46
11.01 Amending and Supplementing Contract Documents 46
11.02 Owner-Authorized Changes in the Work 47
11.03 Unauthorized Changes in the Work 48
11.04 Change of Contract Price 48
11.05 Change of Contract Times 49
11.06 Change Proposals 49
11.07 Execution of Change Orders 50
11.08 Notification to Surety 50
Article 12 – Claims 51
12.01 Claims 51

Copyright © 2013 National Society of Professional Engineers, American Council of Engineering Companies, and American Society of Civil Engineers. All rights reserved.

Article 13 – Cost of the Work; Allowances; Unit Price Work 52
13.01 Cost of the Work 52
13.02 Allowances 55
13.03 Unit Price Work 55
Article 14 – Tests and Inspections; Correction, Removal or Acceptance of Defective Work 56
14.01 Access to Work 56
14.02 Tests, Inspections, and Approvals 56
14.03 Defective Work 57
14.04 Acceptance of Defective Work 58
14.05 Uncovering Work 58
14.06 Owner May Stop the Work 58
14.07 Owner May Correct Defective Work 59
Article 15 – Payments to Contractor; Set-Offs; Completion; Correction Period 59
15.01 Progress Payments 59
15.02 Contractor's Warranty of Title 63
15.03 Substantial Completion 63
15.04 Partial Use or Occupancy 64
15.05 Final Inspection 64
15.06 Final Payment 65
15.07 Waiver of Claims 66
15.08 Correction Period 66
Article 16 – Suspension of Work and Termination 67
16.01 Owner May Suspend Work 67
16.02 Owner May Terminate for Cause 67
16.03 Owner May Terminate For Convenience 68
16.04 Contractor May Stop Work or Terminate 69
Article 17 – Final Resolution of Disputes 69
17.01 Methods and Procedures 69
Article 18 – Miscellaneous 70
18.01 Giving Notice 70
18.02 Computation of Times 70
18.03 Cumulative Remedies 70
18.04 Limitation of Damages 70

Copyright © 2013 National Society of Professional Engineers, American Council of Engineering Companies, and American Society of Civil Engineers. All rights reserved.

18.05 No Waiver 70
18.06 Survival of Obligations 70
18.07 Controlling Law 71
18.08 Headings 71

Copyright © 2013 National Society of Professional Engineers, American Council of Engineering Companies,
and American Society of Civil Engineers. All rights reserved.

ARTICLE 1 – DEFINITIONS AND TERMINOLOGY

1.01 Defined Terms

A. Wherever used in the Bidding Requirements or Contract Documents, a term printed with initial capital letters, including the term's singular and plural forms, will have the meaning indicated in the definitions below. In addition to terms specifically defined, terms with initial capital letters in the Contract Documents include references to identified articles and paragraphs, and the titles of other documents or forms.

1. *Addenda*—Written or graphic instruments issued prior to the opening of Bids which clarify, correct, or change the Bidding Requirements or the proposed Contract Documents.

2. *Agreement*—The written instrument, executed by Owner and Contractor, that sets forth the Contract Price and Contract Times, identifies the parties and the Engineer, and designates the specific items that are Contract Documents.

3. *Application for Payment*—The form acceptable to Engineer which is to be used by Contractor during the course of the Work in requesting progress or final payments and which is to be accompanied by such supporting documentation as is required by the Contract Documents.

4. *Bid*—The offer of a Bidder submitted on the prescribed form setting forth the prices for the Work to be performed.

5. *Bidder*—An individual or entity that submits a Bid to Owner.

6. *Bidding Documents*—The Bidding Requirements, the proposed Contract Documents, and all Addenda.

7. *Bidding Requirements*—The advertisement or invitation to bid, Instructions to Bidders, Bid Bond or other Bid security, if any, the Bid Form, and the Bid with any attachments.

8. *Change Order*—A document which is signed by Contractor and Owner and authorizes an addition, deletion, or revision in the Work or an adjustment in the Contract Price or the Contract Times, or other revision to the Contract, issued on or after the Effective Date of the Contract.

9. *Change Proposal*—A written request by Contractor, duly submitted in compliance with the procedural requirements set forth herein, seeking an adjustment in Contract Price or Contract Times, or both; contesting an initial decision by Engineer concerning the requirements of the Contract Documents or the acceptability of Work under the Contract Documents; challenging a set-off against payments due; or seeking other relief with respect to the terms of the Contract.

10. *Claim*—(a) A demand or assertion by Owner directly to Contractor, duly submitted in compliance with the procedural requirements set forth herein: seeking an adjustment of Contract Price or Contract Times, or both; contesting an initial decision by Engineer concerning the requirements of the Contract Documents or the acceptability of Work under the Contract Documents; contesting Engineer's decision regarding a Change Proposal; seeking

Copyright © 2013 National Society of Professional Engineers, American Council of Engineering Companies, and American Society of Civil Engineers. All rights reserved.

resolution of a contractual issue that Engineer has declined to address; or seeking other relief with respect to the terms of the Contract; or (b) a demand or assertion by Contractor directly to Owner, duly submitted in compliance with the procedural requirements set forth herein, contesting Engineer's decision regarding a Change Proposal; or seeking resolution of a contractual issue that Engineer has declined to address. A demand for money or services by a third party is not a Claim.

11. *Constituent of Concern*—Asbestos, petroleum, radioactive materials, polychlorinated biphenyls (PCBs), hazardous waste, and any substance, product, waste, or other material of any nature whatsoever that is or becomes listed, regulated, or addressed pursuant to (a) the Comprehensive Environmental Response, Compensation and Liability Act, 42 U.S.C. §§9601 et seq. ("CERCLA"); (b) the Hazardous Materials Transportation Act, 49 U.S.C. §§5501 et seq.; (c) the Resource Conservation and Recovery Act, 42 U.S.C. §§6901 et seq. ("RCRA"); (d) the Toxic Substances Control Act, 15 U.S.C. §§2601 et seq.; (e) the Clean Water Act, 33 U.S.C. §§1251 et seq.; (f) the Clean Air Act, 42 U.S.C. §§7401 et seq.; or (g) any other federal, state, or local statute, law, rule, regulation, ordinance, resolution, code, order, or decree regulating, relating to, or imposing liability or standards of conductconcerning, any hazardous, toxic, or dangerous waste, substance, or material.

12. *Contract*—The entire and integrated written contract between the Owner and Contractor concerning the Work.

13. *Contract Documents*—Those items so designated in the Agreement, and which together comprise the Contract.

14. *Contract Price*—The money that Owner has agreed to pay Contractor for completion of the Work in accordance with the Contract Documents. .

15. *Contract Times*—The number of days or the dates by which Contractor shall: (a) achieve Milestones, if any; (b) achieve Substantial Completion; and (c) complete the Work.

16. *Contractor*—The individual or entity with which Owner has contracted for performance of the Work.

17. *Cost of the Work*—See Paragraph 13.01 for definition.

18. *Drawings*—The part of the Contract that graphically shows the scope, extent, and character of the Work to be performed by Contractor.

19. *Effective Date of the Contract*—The date, indicated in the Agreement, on which the Contract becomes effective.

20. *Engineer*—The individual or entity named as such in the Agreement.

21. *Field Order*—A written order issued by Engineer which requires minor changes in the Work but does not change the Contract Price or the Contract Times.

22. *Hazardous Environmental Condition*—The presence at the Site of Constituents of Concern in such quantities or circumstances that may present adanger to persons or property exposed thereto. The presence at the Site of

Copyright © 2013 National Society of Professional Engineers, American Council of Engineering Companies, and American Society of Civil Engineers. All rights reserved.

materials that are necessary for the execution of the Work, or that are to be incorporated in the Work, and that are controlled and contained pursuant to industry practices, Laws and Regulations, and the requirements of the Contract, does not establish a Hazardous Environmental Condition.

23. *Laws and Regulations; Laws or Regulations*—Any and all applicable laws, statutes, rules, regulations, ordinances, codes, and orders of any and all governmental bodies, agencies, authorities, and courts having jurisdiction.

24. *Liens*—Charges, security interests, or encumbrances upon Contract-related funds, real property, or personal property.

25. *Milestone*—A principal event in the performance of the Work that the Contract requires Contractor to achieve by an intermediate completion date or by a time prior to Substantial Completion of all the Work.

26. *Notice of Award*—The written notice by Owner to a Bidder of Owner's acceptance of the Bid.

27. *Notice to Proceed*—A written notice by Owner to Contractor fixing the date on which the Contract Times will commence to run and on which Contractor shall start to perform the Work.

28. *Owner*—The individual or entity with which Contractor has contracted regarding the Work, and which has agreed to pay Contractor for the performance of the Work, pursuant to the terms of the Contract.

29. *Progress Schedule*—A schedule, prepared and maintained by Contractor, describing the sequence and duration of the activities comprising the Contractor's plan to accomplish the Work within the Contract Times.

30. *Project*—The total undertaking to be accomplished for Owner by engineers, contractors, and others, including planning, study, design, construction, testing, commissioning, and start-up, and of which the Work to be performed under the Contract Documents is a part.

31. *Project Manual*—The written documents prepared for, or made available for, procuring and constructing the Work, including but not limited to the Bidding Documents or other construction procurement documents, geotechnical and existing conditions information, the Agreement, bond forms, General Conditions, Supplementary Conditions, and Specifications. The contents of the Project Manual may be bound in one or more volumes.

32. *Resident Project Representative*—The authorized representative of Engineer assigned to assist Engineer at the Site. As used herein, the term Resident Project Representative or "RPR" includes any assistants or field staff of Resident Project Representative.

33. *Samples*—Physical examples of materials, equipment, or workmanship that are representative of some portion of the Work and that establish the standards by which such portion of the Work will be judged.

34. *Schedule of Submittals*—A schedule, prepared and maintained by Contractor, of required submittals and the time requirements for Engineer's review of the submittals and the performance of related construction activities.

Copyright © 2013 National Society of Professional Engineers, American Council of Engineering Companies, and American Society of Civil Engineers. All rights reserved.

35. *Schedule of Values*—A schedule, prepared and maintained by Contractor, allocating portions of the Contract Price to various portions of the Work and used as the basis for reviewing Contractor's Applications for Payment.

36. *Shop Drawings*—All drawings, diagrams, illustrations, schedules, and other data or information that are specifically prepared or assembled by or for Contractor and submitted by Contractor to illustrate some portion of the Work. Shop Drawings, whether approved or not, are not Drawings and are not Contract Documents.

37. *Site*—Lands or areas indicated in the Contract Documents as being furnished by Owner upon which the Work is to be performed, including rights-of-way and easements, and such other lands furnished by Owner which are designatedfor the use of Contractor.

38. *Specifications*—The part of the Contract that consists of written requirements for materials, equipment, systems, standards, and workmanship as applied to the Work, and certain administrative requirements and procedural matters applicable to the Work.

39. *Subcontractor*—An individual or entity having a direct contract withContractor or with any other Subcontractor for the performance of a part of theWork.

40. *Substantial Completion*—The time at which the Work (or a specified part thereof) has progressed to the point where, in the opinion of Engineer, the Work (or a specified part thereof) is sufficiently complete, in accordance with the Contract Documents, so that the Work (or a specified part thereof) can be utilized for the purposes for which it is intended. The terms "substantially complete" and "substantially completed" as applied to all or part of the Work refer to Substantial Completion thereof.

41. *Successful Bidder*—The Bidder whose Bid the Owner accepts, and to which the Owner makes an award of contract, subject to stated conditions.

42. *Supplementary Conditions*—The part of the Contract that amends or supplements these General Conditions.

43. *Supplier*—A manufacturer, fabricator, supplier, distributor, materialman, or vendor having a direct contract with Contractor or with any Subcontractor to furnish materials or equipment to be incorporated in the Work by Contractor or a Subcontractor.

44. *Technical Data*—Those items expressly identified as Technical Data in the Supplementary Conditions, with respect to either (a) subsurface conditions at the Site, or physical conditions relating to existing surface or subsurface structures at the Site (except Underground Facilities) or (b) Hazardous Environmental Conditions at the Site. If no such express identifications of Technical Data have been made with respect to conditions at the Site, then the data contained in boring logs, recorded measurements of subsurface water levels, laboratory test results, and other factual, objective information regarding conditions at the Site that are set forth in any geotechnical orenvironmental report prepared for the Project and made available to

Copyright © 2013 National Society of Professional Engineers, American Council of Engineering Companies, and American Society of Civil Engineers. All rights reserved.

Contractor are hereby defined as Technical Data with respect to conditions at the Site under Paragraphs 5.03, 5.04, and 5.06.

45. *Underground Facilities*—All underground pipelines, conduits, ducts, cables, wires, manholes, vaults, tanks, tunnels, or other such facilities or attachments, and any encasements containing such facilities, including but not limited to those that convey electricity, gases, steam, liquid petroleum products, telephone or other communications, fiber optic transmissions, cable television, water, wastewater, storm water, other liquids or chemicals, or traffic or other control systems.

46. *Unit Price Work*—Work to be paid for on the basis of unit prices.

47. *Work*—The entire construction or the various separately identifiable parts thereof required to be provided under the Contract Documents. Work includes and is the result of performing or providing all labor, services, and documentation necessary to produce such construction; furnishing, installing, and incorporating all materials and equipment into such construction; and may include related services such as testing, start-up, and commissioning, all as required by the Contract Documents.

48. *Work Change Directive*—A written directive to Contractor issued on or after the Effective Date of the Contract, signed by Owner and recommended by Engineer, ordering an addition, deletion, or revision in the Work.

1.02 Terminology

A. The words and terms discussed in the following paragraphs are not defined but, when used in the Bidding Requirements or Contract Documents, have the indicated meaning.

B. *Intent of Certain Terms or Adjectives*:

1. The Contract Documents include the terms "as allowed," "as approved," "as ordered," "as directed" or terms of like effect or import to authorize an exercise of professional judgment by Engineer. In addition, the adjectives "reasonable," "suitable," "acceptable," "proper," "satisfactory," or adjectives of like effect or import are used to describe an action or determination of Engineer as to the Work. It is intended that such exercise of professional judgment, action, or determination will be solely to evaluate, in general, the Work for compliance with the information in the Contract Documents andwith the design concept of the Project as a functioning whole as shown or indicated in the Contract Documents (unless there is a specific statementindicating otherwise). The use of any such term or adjective is not intended to and shall not be effective to assign to Engineer any duty or authority to supervise or direct the performance of the Work, or any duty or authority to undertake responsibility contrary to the provisions of Article 10 or any other provision of the Contract Documents.

C. *Day*:

1. The word "day" means a calendar day of 24 hours measured from midnight to the next midnight.

Copyright © 2013 National Society of Professional Engineers, American Council of Engineering Companies, and American Society of Civil Engineers. All rights reserved.

D. *Defective*:

1. The word "defective," when modifying the word "Work," refers to Work that is unsatisfactory, faulty, or deficient in that it:

   a. does not conform to the Contract Documents; or

   b. does not meet the requirements of any applicable inspection, reference standard, test, or approval referred to in the Contract Documents; or

   c. has been damaged prior to Engineer's recommendation of final payment (unless responsibility for the protection thereof has been assumed by Owner at Substantial Completion in accordance with Paragraph 15.03 or 15.04).

E. *Furnish, Install, Perform, Provide*:

1. The word "furnish," when used in connection with services, materials, or equipment, shall mean to supply and deliver said services, materials, or equipment to the Site (or some other specified location) ready for use or installation and in usable or operable condition.

2. The word "install," when used in connection with services, materials, or equipment, shall mean to put into use or place in final position said services, materials, or equipment complete and ready for intended use.

3. The words "perform" or "provide," when used in connection with services, materials, or equipment, shall mean to furnish and install said services, materials, or equipment complete and ready for intended use.

4. If the Contract Documents establish an obligation of Contractor with respect to specific services, materials, or equipment, but do not expressly use any of the four words "furnish," "install," "perform," or "provide," then Contractor shall furnish and install said services, materials, or equipment complete and ready for intended use.

F. Unless stated otherwise in the Contract Documents, words or phrases that have a well-known technical or construction industry or trade meaning are used in the Contract Documents in accordance with such recognized meaning.

ARTICLE 2 – PRELIMINARY MATTERS

2.01 Delivery of Bonds and Evidence of Insurance

A. *Bonds*: When Contractor delivers the executed counterparts of the Agreement to Owner, Contractor shall also deliver to Owner such bonds as Contractor may be required to furnish.

B. *Evidence of Contractor's Insurance*: When Contractor delivers the executed counterparts of the Agreement to Owner, Contractor shall also deliver to Owner, with copies to each named insured and additional insured (as identified in the Supplementary Conditions or elsewhere in the Contract), the certificates and other evidence of insurance required to be provided by Contractor in accordance with Article 6.

C. *Evidence of Owner's Insurance*: After receipt of the executed counterparts of the Agreement and all required bonds and insurance documentation, Owner shall

Copyright © 2013 National Society of Professional Engineers, American Council of Engineering Companies, and American Society of Civil Engineers. All rights reserved.

promptly deliver to Contractor, with copies to each named insured and additional insured (as identified in the Supplementary Conditions or otherwise), the certificates and other evidence of insurance required to be provided by Owner under Article 6.

2.02 Copies of Documents

A. Owner shall furnish to Contractor four printed copies of the Contract (including one fully executed counterpart of the Agreement), and one copy in electronic portable document format (PDF). Additional printed copies will be furnished upon request at the cost of reproduction.

B. Owner shall maintain and safeguard at least one original printed record version of the Contract, including Drawings and Specifications signed and sealed by Engineer and other design professionals. Owner shall make such original printed record version of the Contract available to Contractor for review. Owner may delegate the responsibilities under this provision to Engineer.

2.03 Before Starting Construction

A. *Preliminary Schedules*: Within 10 days after the Effective Date of the Contract (or as otherwise specifically required by the Contract Documents), Contractor shall submit to Engineer for timely review:

1. a preliminary Progress Schedule indicating the times (numbers of days or dates) for starting and completing the various stages of the Work, including any Milestones specified in the Contract;

2. a preliminary Schedule of Submittals; and

3. a preliminary Schedule of Values for all of the Work which includes quantities and prices of items which when added together equal the Contract Price and subdivides the Work into component parts in sufficient detail to serve as the basis for progress payments during performance of the Work. Such prices will include an appropriate amount of overhead and profit applicable to each item of Work.

2.04 Preconstruction Conference; Designation of Authorized Representatives

A. Before any Work at the Site is started, a conference attended by Owner, Contractor, Engineer, and others as appropriate will be held to establish a working understanding among the parties as to the Work and to discuss the schedules referred to in Paragraph 2.03.A, procedures for handling Shop Drawings, Samples, and other submittals, processing Applications for Payment, electronic or digital transmittals, and maintaining required records.

B. At this conference Owner and Contractor each shall designate, in writing, a specific individual to act as its authorized representative with respect to the services and responsibilities under the Contract. Such individuals shall have the authority to transmit and receive information, render decisions relative to the Contract, and otherwise act on behalf of each respective party.

2.05 Initial Acceptance of Schedules

A. At least 10 days before submission of the first Application for Payment a conference, attended by Contractor, Engineer, and others as appropriate, will be held to review for acceptability to Engineer as provided below the schedules submitted in

Copyright © 2013 National Society of Professional Engineers, American Council of Engineering Companies, and American Society of Civil Engineers. All rights reserved.

accordance with Paragraph 2.03.A. Contractor shall have an additional 10 days to make corrections and adjustments and to complete and resubmit the schedules. No progress payment shall be made to Contractor until acceptable schedules are submitted to Engineer.

1. The Progress Schedule will be acceptable to Engineer if it provides an orderly progression of the Work to completion within the Contract Times. Such acceptance will not impose on Engineer responsibility for the Progress Schedule, for sequencing, scheduling, or progress of the Work, nor interfere with or relieve Contractor from Contractor's full responsibility therefor.
2. Contractor's Schedule of Submittals will be acceptable to Engineer if it provides a workable arrangement for reviewing and processing the required submittals.
3. Contractor's Schedule of Values will be acceptable to Engineer as to form and substance if it provides a reasonable allocation of the Contract Price to the component parts of the Work.

2.06 Electronic Transmittals

A. Except as otherwise stated elsewhere in the Contract, the Owner, Engineer, and Contractor may transmit, and shall accept, Project-related correspondence, text, data, documents, drawings, information, and graphics, including but not limited to Shop Drawings and other submittals, in electronic media or digital format, either directly, or through access to a secure Project website.

B. If the Contract does not establish protocols for electronic or digital transmittals, then Owner, Engineer, and Contractor shall jointly develop such protocols.

C. When transmitting items in electronic media or digital format, the transmitting party makes no representations as to long term compatibility, usability, or readability of the items resulting from the recipient's use of software application packages, operating systems, or computer hardware differing from those used in the drafting or transmittal of the items, or from those established in applicable transmittal protocols.

ARTICLE 3 – DOCUMENTS: INTENT, REQUIREMENTS, REUSE

3.01 Intent

A. The Contract Documents are complementary; what is required by one is as binding as if required by all.

B. It is the intent of the Contract Documents to describe a functionally complete project (or part thereof) to be constructed in accordance with the Contract Documents.

C. Unless otherwise stated in the Contract Documents, if there is a discrepancy between the electronic or digital versions of the Contract Documents (including any printed copies derived from such electronic or digital versions) and the printed record version, the printed record version shall govern.

D. The Contract supersedes prior negotiations, representations, and agreements, whether written or oral.

E. Engineer will issue clarifications and interpretations of the Contract Documents as provided herein.

Copyright © 2013 National Society of Professional Engineers, American Council of Engineering Companies, and American Society of Civil Engineers. All rights reserved.

3.02 Reference Standards

A. Standards Specifications, Codes, Laws and Regulations

1. Reference in the Contract Documents to standard specifications, manuals, reference standards, or codes of any technical society, organization, or association, or to Laws or Regulations, whether such reference be specific or by implication, shall mean the standard specification, manual, reference standard, code, or Laws or Regulations in effect at the time of opening of Bids(or on the Effective Date of the Contract if there were no Bids), except as may be otherwise specifically stated in the Contract Documents.

2. No provision of any such standard specification, manual, reference standard, or code, or any instruction of a Supplier, shall be effective to change the duties or responsibilities of Owner, Contractor, or Engineer, or any of their subcontractors, consultants, agents, or employees, from those set forth in the part of the Contract Documents prepared by or for Engineer. No such provision or instruction shall be effective to assign to Owner, Engineer, or anyof their officers, directors, members, partners, employees, agents, consultants, or subcontractors, any duty or authority to supervise or direct the performance of the Work or any duty or authority to undertake responsibility inconsistent with the provisions of the part of the Contract Documents prepared by or for Engineer.

3.03 Reporting and Resolving Discrepancies

A. *Reporting Discrepancies*:

1. *Contractor's Verification of Figures and Field Measurements*: Before undertaking each part of the Work, Contractor shall carefully study the Contract Documents, and check and verify pertinent figures and dimensions therein, particularly with respect to applicable field measurements. Contractor shall promptly report in writing to Engineer any conflict, error, ambiguity, or discrepancy that Contractor discovers, or has actual knowledge of, and shall not proceed with any Work affected thereby until the conflict, error, ambiguity, or discrepancy is resolved, by a clarification or interpretation by Engineer, or by an amendment or supplement to the Contract Documents issued pursuant to Paragraph 11.01.

2. *Contractor's Review of Contract Documents*: If, before or during the performance of the Work, Contractor discovers any conflict, error, ambiguity, or discrepancy within the Contract Documents, or between the Contract Documents and (a) any applicable Law or Regulation, (b) actual field conditions, (c) any standard specification, manual, reference standard, or code, or (d) any instruction of any Supplier, then Contractor shall promptly report it to Engineer in writing. Contractor shall not proceed with the Work affected thereby (except in an emergency as required by Paragraph 7.15) until the conflict, error, ambiguity, or discrepancy is resolved, by a clarification or interpretation by Engineer, or by an amendment or supplement to the Contract Documents issued pursuant to Paragraph 11.01.

Copyright © 2013 National Society of Professional Engineers, American Council of Engineering Companies, and American Society of Civil Engineers. All rights reserved.

3. Contractor shall not be liable to Owner or Engineer for failure to report any conflict, error, ambiguity, or discrepancy in the Contract Documents unless Contractor had actual knowledge thereof.

B. *Resolving Discrepancies*:

1. Except as may be otherwise specifically stated in the Contract Documents, the provisions of the part of the Contract Documents prepared by or for Engineer shall take precedence in resolving any conflict, error, ambiguity, ordiscrepancy between such provisions of the Contract Documents and:

a. the provisions of any standard specification, manual, reference standard, or code, or the instruction of any Supplier (whether or not specifically incorporated by reference as a Contract Document); or

b. the provisions of any Laws or Regulations applicable to the performance of the Work (unless such an interpretation of the provisions of the Contract Documents would result in violation of such Law or Regulation).

3.04 Requirements of the Contract Documents

A. During the performance of the Work and until final payment, Contractor and Owner shall submit to the Engineer all matters in question concerning the requirements of the Contract Documents (sometimes referred to as requests for information or interpretation—RFIs), or relating to the acceptability of the Work under the Contract Documents, as soon as possible after such matters arise. Engineer will be the initial interpreter of the requirements of the Contract Documents, and judge of the acceptability of the Work thereunder.

B. Engineer will, with reasonable promptness, render a written clarification, interpretation, or decision on the issue submitted, or initiate an amendment or supplement to the Contract Documents. Engineer's written clarification,interpretation, or decision will be final and binding on Contractor, unless it appealsby submitting a Change Proposal, and on Owner, unless it appeals by filing a Claim.

C. If a submitted matter in question concerns terms and conditions of the Contract Documents that do not involve (1) the performance or acceptability of the Work under the Contract Documents, (2) the design (as set forth in the Drawings, Specifications, or otherwise), or (3) other engineering or technical matters, then Engineer will promptly give written notice to Owner and Contractor that Engineer is unable to provide a decision or interpretation. If Owner and Contractor are unable to agree on resolution of such a matter in question, either party may pursue resolutionas provided in Article 12.

3.05 Reuse of Documents

A. Contractor and its Subcontractors and Suppliers shall not:

1. have or acquire any title to or ownership rights in any of the Drawings, Specifications, or other documents (or copies of any thereof) prepared by or bearing the seal of Engineer or its consultants, including electronic media editions, or reuse any such Drawings, Specifications, other documents, or copies thereof on extensions of the Project or any other project without writtenconsent of Owner and Engineer and specific written verification or adaptation by Engineer; or

Copyright © 2013 National Society of Professional Engineers, American Council of Engineering Companies, and American Society of Civil Engineers. All rights reserved.

2. have or acquire any title or ownership rights in any other Contract Documents, reuse any such Contract Documents for any purpose without Owner's express written consent, or violate any copyrights pertaining to such Contract Documents.

B. The prohibitions of this Paragraph 3.05 will survive final payment, or termination of the Contract. Nothing herein shall preclude Contractor from retaining copies of the Contract Documents for record purposes.

ARTICLE 4 – COMMENCEMENT AND PROGRESS OF THE WORK

4.01 Commencement of Contract Times; Notice to Proceed

A. The Contract Times will commence to run on the thirtieth day after the Effective Date of the Contract or, if a Notice to Proceed is given, on the day indicated in the Notice to Proceed. A Notice to Proceed may be given at any time within 30 days after the Effective Date of the Contract. In no event will the Contract Times commence to run later than the sixtieth day after the day of Bid opening or the thirtieth day after the Effective Date of the Contract, whichever date is earlier.

4.02 Starting the Work

A. Contractor shall start to perform the Work on the date when the Contract Times commence to run. No Work shall be done at the Site prior to such date.

4.03 Reference Points

A. Owner shall provide engineering surveys to establish reference points for construction which in Engineer's judgment are necessary to enable Contractor to proceed with the Work. Contractor shall be responsible for laying out the Work, shall protect and preserve the established reference points and property monuments, and shall make no changes or relocations without the prior written approval of Owner. Contractor shall report to Engineer whenever any reference point or property monument is lost or destroyed or requires relocation because of necessary changes ingrades or locations, and shall be responsible for the accurate replacement or relocation of such reference points or property monuments by professionally qualified personnel.

4.04 Progress Schedule

A. Contractor shall adhere to the Progress Schedule established in accordance with Paragraph 2.05 as it may be adjusted from time to time as provided below.

1. Contractor shall submit to Engineer for acceptance (to the extent indicated in Paragraph 2.05) proposed adjustments in the Progress Schedule that will not result in changing the Contract Times.

2. Proposed adjustments in the Progress Schedule that will change the Contract Times shall be submitted in accordance with the requirements of Article 11.

B. Contractor shall carry on the Work and adhere to the Progress Schedule during all disputes or disagreements with Owner. No Work shall be delayed or postponed pending resolution of any disputes or disagreements, or during any appeal process, except as permitted by Paragraph 16.04, or as Owner and Contractor may otherwise agree in writing.

Copyright © 2013 National Society of Professional Engineers, American Council of Engineering Companies, and American Society of Civil Engineers. All rights reserved.

4.05 Delays in Contractor's Progress

A. If Owner, Engineer, or anyone for whom Owner is responsible, delays, disrupts, or interferes with the performance or progress of the Work, then Contractor shall be entitled to an equitable adjustment in the Contract Times and Contract Price. Contractor's entitlement to an adjustment of the Contract Times is conditioned on such adjustment being essential to Contractor's ability to complete the Work within the Contract Times.

B. Contractor shall not be entitled to an adjustment in Contract Price or Contract Times for delay, disruption, or interference caused by or within the control of Contractor. Delay, disruption, and interference attributable to and within the control of a Subcontractor or Supplier shall be deemed to be within the control of Contractor.

C. If Contractor's performance or progress is delayed, disrupted, or interfered with by unanticipated causes not the fault of and beyond the control of Owner, Contractor, and those for which they are responsible, then Contractor shall be entitled to an equitable adjustment in Contract Times. Contractor's entitlement to an adjustment of the Contract Times is conditioned on such adjustment being essential to Contractor's ability to complete the Work within the Contract Times. Such an adjustment shall be Contractor's sole and exclusive remedy for the delays, disruption, and interference described in this paragraph. Causes of delay, disruption, or interference that may give rise to an adjustment in Contract Times under this paragraph include but are not limited to the following:

1. severe and unavoidable natural catastrophes such as fires, floods, epidemics, and earthquakes;
2. abnormal weather conditions;
3. acts or failures to act of utility owners (other than those performing other work at or adjacent to the Site by arrangement with the Owner, as contemplated in Article 8); and
4. acts of war or terrorism.

D. Delays, disruption, and interference to the performance or progress of the Work resulting from the existence of a differing subsurface or physical condition, an Underground Facility that was not shown or indicated by the Contract Documents, or not shown or indicated with reasonable accuracy, and those resulting from Hazardous Environmental Conditions, are governed by Article 5.

E. Paragraph 8.03 governs delays, disruption, and interference to the performance or progress of the Work resulting from the performance of certain other work at or adjacent to the Site.

F. Contractor shall not be entitled to an adjustment in Contract Price or Contract Times for any delay, disruption, or interference if such delay is concurrent with a delay, disruption, or interference caused by or within the control of Contractor.

G. Contractor must submit any Change Proposal seeking an adjustment in Contract Price or Contract Times under this paragraph within 30 days of the commencement of the delaying, disrupting, or interfering event.

Copyright © 2013 National Society of Professional Engineers, American Council of Engineering Companies, and American Society of Civil Engineers. All rights reserved.

ARTICLE 5 – AVAILABILITY OF LANDS; SUBSURFACE AND PHYSICAL CONDITIONS; HAZARDOUS ENVIRONMENTAL CONDITIONS

5.01 Availability of Lands

A. Owner shall furnish the Site. Owner shall notify Contractor of any encumbrances or restrictions not of general application but specifically related to use of the Site with which Contractor must comply in performing the Work.

B. Upon reasonable written request, Owner shall furnish Contractor with a current statement of record legal title and legal description of the lands upon which permanent improvements are to be made and Owner's interest therein as necessary for giving notice of or filing a mechanic's or construction lien against such lands in accordance with applicable Laws and Regulations.

C. Contractor shall provide for all additional lands and access thereto that may be required for temporary construction facilities or storage of materials and equipment.

5.02 Use of Site and Other Areas

A. *Limitation on Use of Site and Other Areas*:

1. Contractor shall confine construction equipment, temporary construction facilities, the storage of materials and equipment, and the operations of workers to the Site, adjacent areas that Contractor has arranged to use through construction easements or otherwise, and other adjacent areas permitted by Laws and Regulations, and shall not unreasonably encumber the Site and such other adjacent areas with construction equipment or other materials or equipment. Contractor shall assume full responsibility for (a) damage to the Site; (b) damage to any such other adjacent areas used for Contractor's operations; (c) damage to any other adjacent land or areas; and (d) for injuries and losses sustained by the owners or occupants of any such land or areas; provided that such damage or injuries result from the performance of the Work or from other actions or conduct of the Contractor or those for which Contractor is responsible.

2. If a damage or injury claim is made by the owner or occupant of any such land or area because of the performance of the Work, or because of other actions or conduct of the Contractor or those for which Contractor is responsible, Contractor shall (a) take immediate corrective or remedial action as required by Paragraph 7.12, or otherwise; (b) promptly attempt to settle the claim as to all parties through negotiations with such owner or occupant, or otherwise resolve the claim by arbitration or other dispute resolution proceeding, or at law; and (c) to the fullest extent permitted by Laws and Regulations, indemnify and hold harmless Owner and Engineer, and the officers, directors, members, partners, employees, agents, consultants and subcontractors of each and any of them from and against any such claim, and against all costs, losses,and damages (including but not limited to all fees and charges of engineers, architects, attorneys, and other professionals and all court or arbitration or other dispute resolution costs) arising out of or relating to any claim or action, legal or equitable, brought by any such owner or occupant against Owner, Engineer, or any other party indemnified hereunder to the extent caused directly or indirectly, in whole or in part by, or based upon, Contractor's

Copyright © 2013 National Society of Professional Engineers, American Council of Engineering Companies, and American Society of Civil Engineers. All rights reserved.

performance of the Work, or because of other actions or conduct of the Contractor or those for which Contractor is responsible.

B. *Removal of Debris During Performance of the Work*: During the progress of the Work the Contractor shall keep the Site and other adjacent areas free from accumulations of waste materials, rubbish, and other debris. Removal and disposal of such waste materials, rubbish, and other debris shall conform to applicable Laws andRegulations.

C. *Cleaning*: Prior to Substantial Completion of the Work Contractor shall clean the Site and the Work and make it ready for utilization by Owner. At the completion of the Work Contractor shall remove from the Site and adjacent areas all tools, appliances, construction equipment and machinery, and surplus materials and shall restore to original condition all property not designated for alteration by the Contract Documents.

D. *Loading of Structures*: Contractor shall not load nor permit any part of any structure to be loaded in any manner that will endanger the structure, nor shall Contractor subject any part of the Work or adjacent structures or land to stresses or pressures that will endanger them.

5.03 Subsurface and Physical Conditions

A. *Reports and Drawings*: The Supplementary Conditions identify:

1. those reports known to Owner of explorations and tests of subsurface conditions at or adjacent to the Site;

2. those drawings known to Owner of physical conditions relating to existing surface or subsurface structures at the Site (except Underground Facilities); and

3. Technical Data contained in such reports and drawings.

B. *Reliance by Contractor on Technical Data Authorized*: Contractor may rely upon the accuracy of the Technical Data expressly identified in the Supplementary Conditions with respect to such reports and drawings, but such reports and drawings are not Contract Documents. If no such express identification has been made, then Contractor may rely upon the accuracy of the Technical Data (as defined in Article1) contained in any geotechnical or environmental report prepared for the Project and made available to Contractor. Except for such reliance on Technical Data, Contractormay not rely upon or make any claim against Owner or Engineer, or any of their officers, directors, members, partners, employees, agents, consultants, or subcontractors, with respect to:

1. the completeness of such reports and drawings for Contractor's purposes, including, but not limited to, any aspects of the means, methods, techniques, sequences, and procedures of construction to be employed by Contractor, and safety precautions and programs incident thereto; or

2. other data, interpretations, opinions, and information contained in such reports or shown or indicated in such drawings; or

3. any Contractor interpretation of or conclusion drawn from any Technical Data or any such other data, interpretations, opinions, or information.

Copyright © 2013 National Society of Professional Engineers, American Council of Engineering Companies, and American Society of Civil Engineers. All rights reserved.

5.04 Differing Subsurface or Physical Conditions

A. *Notice by Contractor*: If Contractor believes that any subsurface or physical condition that is uncovered or revealed at the Site either:

1. is of such a nature as to establish that any Technical Data on which Contractor is entitled to rely as provided in Paragraph 5.03 is materially inaccurate; or
2. is of such a nature as to require a change in the Drawings or Specifications; or
3. differs materially from that shown or indicated in the Contract Documents; or
4. is of an unusual nature, and differs materially from conditions ordinarily encountered and generally recognized as inherent in work of the character provided for in the Contract Documents;

then Contractor shall, promptly after becoming aware thereof and before further disturbing the subsurface or physical conditions or performing any Work in connection therewith (except in an emergency as required by Paragraph 7.15), notify Owner and Engineer in writing about such condition. Contractor shall not further disturb such condition or perform any Work in connection therewith (except with respect to an emergency) until receipt of a written statement permitting Contractor todo so.

B. *Engineer's Review*: After receipt of written notice as required by the preceding paragraph, Engineer will promptly review the subsurface or physical condition in question; determine the necessity of Owner's obtaining additional exploration or tests with respect to the condition; conclude whether the condition falls within any one or more of the differing site condition categories in Paragraph 5.04.A above; obtain any pertinent cost or schedule information from Contractor; prepare recommendations to Owner regarding the Contractor's resumption of Work in connection with the subsurface or physical condition in question and the need for any change in the Drawings or Specifications; and advise Owner in writing of Engineer's findings, conclusions, and recommendations.

C. *Owner's Statement to Contractor Regarding Site Condition*: After receipt of Engineer's written findings, conclusions, and recommendations, Owner shall issue a written statement to Contractor (with a copy to Engineer) regarding the subsurface or physical condition in question, addressing the resumption of Work in connection with such condition, indicating whether any change in the Drawings or Specifications will be made, and adopting or rejecting Engineer's written findings, conclusions, and recommendations, in whole or in part.

D. *Possible Price and Times Adjustments*:

1. Contractor shall be entitled to an equitable adjustment in Contract Price or Contract Times, or both, to the extent that the existence of a differing subsurface or physical condition, or any related delay, disruption, or interference, causes an increase or decrease in Contractor's cost of, or time required for, performance of the Work; subject, however, to the following:
    a. such condition must fall within any one or more of the categories described in Paragraph 5.04.A;

Copyright © 2013 National Society of Professional Engineers, American Council of Engineering Companies, and American Society of Civil Engineers. All rights reserved.

b. with respect to Work that is paid for on a unit price basis, any adjustment in Contract Price will be subject to the provisions of Paragraph 13.03; and,

c. Contractor's entitlement to an adjustment of the Contract Times is conditioned on such adjustment being essential to Contractor's ability to complete the Work within the Contract Times.

2. Contractor shall not be entitled to any adjustment in the Contract Price or Contract Times with respect to a subsurface or physical condition if:

a. Contractor knew of the existence of such condition at the time Contractor made a commitment to Owner with respect to Contract Price and Contract Times by the submission of a Bid or becoming bound under a negotiated contract, or otherwise; or

b. the existence of such condition reasonably could have been discovered or revealed as a result of any examination, investigation, exploration, test, or study of the Site and contiguous areas expressly required by the Bidding Requirements or Contract Documents to be conducted by or for Contractor prior to Contractor's making such commitment; or

c. Contractor failed to give the written notice as required by Paragraph 5.04.A.

3. If Owner and Contractor agree regarding Contractor's entitlement to and the amount or extent of any adjustment in the Contract Price or Contract Times, or both, then any such adjustment shall be set forth in a Change Order.

4. Contractor may submit a Change Proposal regarding its entitlement to or the amount or extent of any adjustment in the Contract Price or Contract Times, or both, no later than 30 days after Owner's issuance of the Owner's written statement to Contractor regarding the subsurface or physical condition in question.

5.05 Underground Facilities

A. *Contractor's Responsibilities*: The information and data shown or indicated in the Contract Documents with respect to existing Underground Facilities at or adjacent to the Site is based on information and data furnished to Owner or Engineer by the owners of such Underground Facilities, including Owner, or by others. Unless it is otherwise expressly provided in the Supplementary Conditions:

1. Owner and Engineer do not warrant or guarantee the accuracy or completeness of any such information or data provided by others; and

2. the cost of all of the following will be included in the Contract Price, and Contractor shall have full responsibility for:

a. reviewing and checking all information and data regarding existing Underground Facilities at the Site;

b. locating all Underground Facilities shown or indicated in the Contract Documents as being at the Site;

c. coordination of the Work with the owners (including Owner) of such Underground Facilities, during construction; and

Copyright © 2013 National Society of Professional Engineers, American Council of Engineering Companies, and American Society of Civil Engineers. All rights reserved.

d. the safety and protection of all existing Underground Facilities at the Site, and repairing any damage thereto resulting from the Work.

B. *Notice by Contractor*: If Contractor believes that an Underground Facility that is uncovered or revealed at the Site was not shown or indicated in the Contract Documents, or was not shown or indicated with reasonable accuracy, then Contractor shall, promptly after becoming aware thereof and before further disturbing conditions affected thereby or performing any Work in connection therewith (except in an emergency as required by Paragraph 7.15), identify the owner of such Underground Facility and give written notice to that owner and to Owner andEngineer.

C. *Engineer's Review*: Engineer will promptly review the Underground Facility and conclude whether such Underground Facility was not shown or indicated in the Contract Documents, or was not shown or indicated with reasonable accuracy; obtain any pertinent cost or schedule information from Contractor; prepare recommendations to Owner regarding the Contractor's resumption of Work in connection with the Underground Facility in question; determine the extent, if any,to which a change is required in the Drawings or Specifications to reflect anddocument the consequences of the existence or location of the Underground Facility; and advise Owner in writing of Engineer's findings, conclusions, and recommendations. During such time, Contractor shall be responsible for the safety and protection of such Underground Facility.

D. *Owner's Statement to Contractor Regarding Underground Facility*: After receipt of Engineer's written findings, conclusions, and recommendations, Owner shall issue a written statement to Contractor (with a copy to Engineer) regarding the Underground Facility in question, addressing the resumption of Work in connection with such Underground Facility, indicating whether any change in the Drawings or Specifications will be made, and adopting or rejecting Engineer's written findings, conclusions, and recommendations in whole or in part.

E. *Possible Price and Times Adjustments*:

1. Contractor shall be entitled to an equitable adjustment in the Contract Price or Contract Times, or both, to the extent that any existing Underground Facility at the Site that was not shown or indicated in the Contract Documents, or was not shown or indicated with reasonable accuracy, or any related delay, disruption, or interference, causes an increase or decrease in Contractor's cost of, or time required for, performance of the Work; subject, however, to the following:

   a. Contractor did not know of and could not reasonably have been expected to be aware of or to have anticipated the existence or actual location of the Underground Facility in question;

   b. With respect to Work that is paid for on a unit price basis, any adjustment in Contract Price will be subject to the provisions of Paragraph 13.03;

   c. Contractor's entitlement to an adjustment of the Contract Times is conditioned on such adjustment being essential to Contractor's ability to complete the Work within the Contract Times; and

   d. Contractor gave the notice required in Paragraph 5.05.B.

Copyright © 2013 National Society of Professional Engineers, American Council of Engineering Companies, and American Society of Civil Engineers. All rights reserved.

2. If Owner and Contractor agree regarding Contractor's entitlement to and the amount or extent of any adjustment in the Contract Price or Contract Times, or both, then any such adjustment shall be set forth in a Change Order.

3. Contractor may submit a Change Proposal regarding its entitlement to or the amount or extent of any adjustment in the Contract Price or Contract Times, or both, no later than 30 days after Owner's issuance of the Owner's written statement to Contractor regarding the Underground Facility in question.

5.06 Hazardous Environmental Conditions at Site

A. *Reports and Drawings*: The Supplementary Conditions identify:

1. those reports and drawings known to Owner relating to Hazardous Environmental Conditions that have been identified at or adjacent to the Site; and

2. Technical Data contained in such reports and drawings.

B. *Reliance by Contractor on Technical Data Authorized*: Contractor may rely upon the accuracy of the Technical Data expressly identified in the Supplementary Conditions with respect to such reports and drawings, but such reports and drawings are not Contract Documents. If no such express identification has been made, then Contractor may rely on the accuracy of the Technical Data (as defined in Article 1) contained in any geotechnical or environmental report prepared for the Project and made available to Contractor. Except for such reliance on Technical Data, Contractormay not rely upon or make any claim against Owner or Engineer, or any of their officers, directors, members, partners, employees, agents, consultants, or subcontractors with respect to:

1. the completeness of such reports and drawings for Contractor's purposes, including, but not limited to, any aspects of the means, methods, techniques, sequences and procedures of construction to be employed by Contractor and safety precautions and programs incident thereto; or

2. other data, interpretations, opinions and information contained in such reports or shown or indicated in such drawings; or

3. any Contractor interpretation of or conclusion drawn from any Technical Data or any such other data, interpretations, opinions or information.

C. Contractor shall not be responsible for removing or remediating any Hazardous Environmental Condition encountered, uncovered, or revealed at the Site unless such removal or remediation is expressly identified in the Contract Documents to be within the scope of the Work.

D. Contractor shall be responsible for controlling, containing, and duly removing all Constituents of Concern brought to the Site by Contractor, Subcontractors, Suppliers, or anyone else for whom Contractor is responsible, and for any associated costs; and for the costs of removing and remediating any Hazardous Environmental Condition created by the presence of any such Constituents of Concern.

E. If Contractor encounters, uncovers, or reveals a Hazardous Environmental Condition whose removal or remediation is not expressly identified in the Contract Documents as being within the scope of the Work, or if Contractor or anyone for whom

Copyright © 2013 National Society of Professional Engineers, American Council of Engineering Companies, and American Society of Civil Engineers. All rights reserved.

Contractor is responsible creates a Hazardous Environmental Condition, then Contractor shall immediately: (1) secure or otherwise isolate such condition; (2) stop all Work in connection with such condition and in any area affected thereby (except in an emergency as required by Paragraph 7.15); and (3) notify Owner and Engineer (and promptly thereafter confirm such notice in writing). Owner shall promptlyconsult with Engineer concerning the necessity for Owner to retain a qualified expert to evaluate such condition or take corrective action, if any. Promptly after consulting with Engineer, Owner shall take such actions as are necessary to permit Owner to timely obtain required permits and provide Contractor the written notice required by Paragraph 5.06.F. If Contractor or anyone for whom Contractor is responsible created the Hazardous Environmental Condition in question, then Owner may remove and remediate the Hazardous Environmental Condition, and impose a set-off against payments to account for the associated costs.

F. Contractor shall not resume Work in connection with such Hazardous Environmental Condition or in any affected area until after Owner has obtained any required permits related thereto, and delivered written notice to Contractor either (1) specifying that such condition and any affected area is or has been rendered safe for the resumption of Work, or (2) specifying any special conditions under which such Work may be resumed safely.

G. If Owner and Contractor cannot agree as to entitlement to or on the amount or extent, if any, of any adjustment in Contract Price or Contract Times, or both, as a result of such Work stoppage or such special conditions under which Work is agreed to be resumed by Contractor, then within 30 days of Owner's written notice regarding the resumption of Work, Contractor may submit a Change Proposal, or Owner may impose a set-off.

H. If after receipt of such written notice Contractor does not agree to resume such Work based on a reasonable belief it is unsafe, or does not agree to resume such Work under such special conditions, then Owner may order the portion of the Work that is in the area affected by such condition to be deleted from the Work, following the contractual change procedures in Article 11. Owner may have such deleted portionof the Work performed by Owner's own forces or others in accordance with Article8.

I. To the fullest extent permitted by Laws and Regulations, Owner shall indemnify and hold harmless Contractor, Subcontractors, and Engineer, and the officers, directors, members, partners, employees, agents, consultants, and subcontractors of each and any of them from and against all claims, costs, losses, and damages (including butnot limited to all fees and charges of engineers, architects, attorneys, and other professionals and all court or arbitration or other dispute resolution costs) arising out of or relating to a Hazardous Environmental Condition, provided that such Hazardous Environmental Condition (1) was not shown or indicated in the Drawings, Specifications, or other Contract Documents, identified as Technical Data entitled to limited reliance pursuant to Paragraph 5.06.B, or identified in the Contract Documents to be included within the scope of the Work, and (2) was not created by Contractor or by anyone for whom Contractor is responsible. Nothing in this Paragraph 5.06.H shall obligate Owner to indemnify any individual or entity from and against the consequences of that individual's or entity's own negligence.

Copyright © 2013 National Society of Professional Engineers, American Council of Engineering Companies, and American Society of Civil Engineers. All rights reserved.

J. To the fullest extent permitted by Laws and Regulations, Contractor shall indemnify and hold harmless Owner and Engineer, and the officers, directors, members, partners, employees, agents, consultants, and subcontractors of each and any of them from and against all claims, costs, losses, and damages (including but not limited to all fees and charges of engineers, architects, attorneys, and other professionals andall court or arbitration or other dispute resolution costs) arising out of or relating to the failure to control, contain, or remove a Constituent of Concern brought to the Siteby Contractor or by anyone for whom Contractor is responsible, or to a Hazardous Environmental Condition created by Contractor or by anyone for whom Contractor isresponsible. Nothing in this Paragraph 5.06.J shall obligate Contractor to indemnify any individual or entity from and against the consequences of that individual's or entity's own negligence.

K. The provisions of Paragraphs 5.03, 5.04, and 5.05 do not apply to the presence of Constituents of Concern or to a Hazardous Environmental Condition uncovered or revealed at the Site.

ARTICLE 6 – BONDS AND INSURANCE

6.01 Performance, Payment, and Other Bonds

A. Contractor shall furnish a performance bond and a payment bond, each in an amount at least equal to the Contract Price, as security for the faithful performance and payment of all of Contractor's obligations under the Contract. These bonds shall remain in effect until one year after the date when final payment becomes due or until completion of the correction period specified in Paragraph 15.08, whichever is later, except as provided otherwise by Laws or Regulations, the Supplementary Conditions, or other specific provisions of the Contract. Contractor shall also furnish such other bonds as are required by the Supplementary Conditions or other specific provisions of the Contract.

B. All bonds shall be in the form prescribed by the Contract except as provided otherwise by Laws or Regulations, and shall be executed by such sureties as are named in "Companies Holding Certificates of Authority as Acceptable Sureties on Federal Bonds and as Acceptable Reinsuring Companies" as published in Circular 570 (as amended and supplemented) by the Financial Management Service, Surety Bond Branch, U.S. Department of the Treasury. A bond signed by an agent or attorney-in-fact must be accompanied by a certified copy of that individual's authority to bind the surety. The evidence of authority shall show that it is effective on the date the agent or attorney-in-fact signed the accompanying bond.

C. Contractor shall obtain the required bonds from surety companies that are dulylicensed or authorized in the jurisdiction in which the Project is located to issue bonds in the required amounts.

D. If the surety on a bond furnished by Contractor is declared bankrupt or becomes insolvent, or its right to do business is terminated in any state or jurisdiction where any part of the Project is located, or the surety ceases to meet the requirementsabove, then Contractor shall promptly notify Owner and Engineer and shall, within 20 days after the event giving rise to such notification, provide another bond and surety, both of which shall comply with the bond and surety requirements above.

Copyright © 2013 National Society of Professional Engineers, American Council of Engineering Companies, and American Society of Civil Engineers. All rights reserved.

E. If Contractor has failed to obtain a required bond, Owner may exclude the Contractor from the Site and exercise Owner's termination rights under Article 16.

F. Upon request, Owner shall provide a copy of the payment bond to anySubcontractor, Supplier, or other person or entity claiming to have furnished labor ormaterials used in the performance of the Work.

6.02 Insurance—General Provisions

A. Owner and Contractor shall obtain and maintain insurance as required in this Article and in the Supplementary Conditions.

B. All insurance required by the Contract to be purchased and maintained by Owner or Contractor shall be obtained from insurance companies that are duly licensed or authorized, in the state or jurisdiction in which the Project is located, to issueinsurance policies for the required limits and coverages. Unless a different standardis indicated in the Supplementary Conditions, all companies that provide insurance policies required under this Contract shall have an A.M. Best rating of A-VII or better.

C. Contractor shall deliver to Owner, with copies to each named insured and additional insured (as identified in this Article, in the Supplementary Conditions, or elsewhere in the Contract), certificates of insurance establishing that Contractor has obtained and is maintaining the policies, coverages, and endorsements required by the Contract. Upon request by Owner or any other insured, Contractor shall also furnish other evidence of such required insurance, including but not limited to copies of policies and endorsements, and documentation of applicable self-insured retentions and deductibles. Contractor may block out (redact) any confidential premium or pricing information contained in any policy or endorsement furnished under this provision.

D. Owner shall deliver to Contractor, with copies to each named insured and additional insured (as identified in this Article, the Supplementary Conditions, or elsewhere in the Contract), certificates of insurance establishing that Owner has obtained and is maintaining the policies, coverages, and endorsements required of Owner by the Contract (if any). Upon request by Contractor or any other insured, Owner shall also provide other evidence of such required insurance (if any), including but not limited to copies of policies and endorsements, and documentation of applicable self-insured retentions and deductibles. Owner may block out (redact) any confidential premium or pricing information contained in any policy or endorsement furnished under this provision.

E. Failure of Owner or Contractor to demand such certificates or other evidence of the other party's full compliance with these insurance requirements, or failure of Owner or Contractor to identify a deficiency in compliance from the evidence provided, shall not be construed as a waiver of the other party's obligation to obtain and maintain such insurance.

F. If either party does not purchase or maintain all of the insurance required of such party by the Contract, such party shall notify the other party in writing of such failureto purchase prior to the start of the Work, or of such failure to maintain prior to any change in the required coverage.

Copyright © 2013 National Society of Professional Engineers, American Council of Engineering Companies, and American Society of Civil Engineers. All rights reserved.

G. If Contractor has failed to obtain and maintain required insurance, Owner mayexclude the Contractor from the Site, impose an appropriate set-off against payment, and exercise Owner's termination rights under Article 16.

H. Without prejudice to any other right or remedy, if a party has failed to obtain required insurance, the other party may elect to obtain equivalent insurance to protect such other party's interests at the expense of the party who was required to provide such coverage, and the Contract Price shall be adjusted accordingly.

I. Owner does not represent that insurance coverage and limits established in this Contract necessarily will be adequate to protect Contractor or Contractor's interests.

J. The insurance and insurance limits required herein shall not be deemed as a limitation on Contractor's liability under the indemnities granted to Owner and other individuals and entities in the Contract.

6.03 Contractor's Insurance

A. *Workers' Compensation*: Contractor shall purchase and maintain workers' compensation and employer's liability insurance for:

1. claims under workers' compensation, disability benefits, and other similar employee benefit acts.

2. United States Longshoreman and Harbor Workers' Compensation Act and Jones Act coverage (if applicable).

3. claims for damages because of bodily injury, occupational sickness or disease, or death of Contractor's employees (by stop-gap endorsement in monopolist worker's compensation states).

4. Foreign voluntary worker compensation (if applicable).

B. *Commercial General Liability—Claims Covered*: Contractor shall purchase and maintain commercial general liability insurance, covering all operations by or on behalf of Contractor, on an occurrence basis, against:

1. claims for damages because of bodily injury, sickness or disease, or death of any person other than Contractor's employees.

2. claims for damages insured by reasonably available personal injury liability coverage.

3. claims for damages, other than to the Work itself, because of injury to or destruction of tangible property wherever located, including loss of use resulting therefrom.

C. *Commercial General Liability—Form and Content*: Contractor's commercial liability policy shall be written on a 1996 (or later) ISO commercial general liability form (occurrence form) and include the following coverages and endorsements:

1. Products and completed operations coverage:

a. Such insurance shall be maintained for three years after final payment.

b. Contractor shall furnish Owner and each other additional insured (as identified in the Supplementary Conditions or elsewhere in the Contract)

Copyright © 2013 National Society of Professional Engineers, American Council of Engineering Companies, and American Society of Civil Engineers. All rights reserved.

evidence of continuation of such insurance at final payment and three years thereafter.

2. Blanket contractual liability coverage, to the extent permitted by law, including but not limited to coverage of Contractor's contractual indemnity obligations in Paragraph 7.18.
3. Broad form property damage coverage.
4. Severability of interest.
5. Underground, explosion, and collapse coverage.
6. Personal injury coverage.
7. Additional insured endorsements that include both ongoing operations and products and completed operations coverage through ISO Endorsements CG 20 10 10 01 and CG 20 37 10 01 (together); or CG 20 10 07 04 and CG 20 37 07 04 (together); or their equivalent.
8. For design professional additional insureds, ISO Endorsement CG 20 32 07 04, "Additional Insured—Engineers, Architects or Surveyors Not Engaged by the Named Insured" or its equivalent.

D. *Automobile liability*: Contractor shall purchase and maintain automobile liability insurance against claims for damages because of bodily injury or death of any person or property damage arising out of the ownership, maintenance, or use of any motor vehicle. The automobile liability policy shall be written on an occurrence basis.

E. *Umbrella or excess liability*: Contractor shall purchase and maintain umbrella or excess liability insurance written over the underlying employer's liability, commercial general liability, and automobile liability insurance described in the paragraphs above. Subject to industry-standard exclusions, the coverage afforded shall follow form as to each and every one of the underlying policies.

F. *Contractor's pollution liability insurance*: Contractor shall purchase and maintain a policy covering third-party injury and property damage claims, including clean-up costs, as a result of pollution conditions arising from Contractor's operations and completed operations. This insurance shall be maintained for no less than three years after final completion.

G. *Additional insureds*: The Contractor's commercial general liability, automobile liability, umbrella or excess, and pollution liability policies shall include and list as additional insureds Owner and Engineer, and any individuals or entities identified in the Supplementary Conditions; include coverage for the respective officers, directors, members, partners, employees, agents, consultants, and subcontractors of each and any of all such additional insureds; and the insurance afforded to these additional insureds shall provide primary coverage for all claims covered thereby (including as applicable those arising from both ongoing and completed operations) on a non-contributory basis. Contractor shall obtain all necessary endorsements to support these requirements.

H. *Contractor's professional liability insurance*: If Contractor will provide or furnish professional services under this Contract, through a delegation of professional design services or otherwise, then Contractor shall be responsible for purchasing and

Copyright © 2013 National Society of Professional Engineers, American Council of Engineering Companies, and American Society of Civil Engineers. All rights reserved.

maintaining applicable professional liability insurance. This insurance shall provide protection against claims arising out of performance of professional design or related services, and caused by a negligent error, omission, or act for which the insured party is legally liable. It shall be maintained throughout the duration of the Contract and for a minimum of two years after Substantial Completion. If such professional design services are performed by a Subcontractor, and not by Contractor itself, then the requirements of this paragraph may be satisfied through the purchasing and maintenance of such insurance by such Subcontractor.

I. *General provisions*: The policies of insurance required by this Paragraph 6.03 shall:

1. include at least the specific coverages provided in this Article.
2. be written for not less than the limits of liability provided in this Article and in the Supplementary Conditions, or required by Laws or Regulations, whichever is greater.
3. contain a provision or endorsement that the coverage afforded will not be canceled, materially changed, or renewal refused until at least 10 days prior written notice has been given to Contractor. Within three days of receipt of any such written notice, Contractor shall provide a copy of the notice toOwner, Engineer, and each other insured under the policy.
4. remain in effect at least until final payment (and longer if expressly required in this Article) and at all times thereafter when Contractor may be correcting, removing, or replacing defective Work as a warranty or correction obligation, or otherwise, or returning to the Site to conduct other tasks arising from the Contract Documents.
5. be appropriate for the Work being performed and provide protection from claims that may arise out of or result from Contractor's performance of the Work and Contractor's other obligations under the Contract Documents, whether it is to be performed by Contractor, any Subcontractor or Supplier, or by anyone directly or indirectly employed by any of them to perform any of the Work, or by anyone for whose acts any of them may be liable.

J. The coverage requirements for specific policies of insurance must be met by such policies, and not by reference to excess or umbrella insurance provided in other policies.

6.04 Owner's Liability Insurance

A. In addition to the insurance required to be provided by Contractor under Paragraph 6.03, Owner, at Owner's option, may purchase and maintain at Owner's expense Owner's own liability insurance as will protect Owner against claims which may arise from operations under the Contract Documents.

B. Owner's liability policies, if any, operate separately and independently from policies required to be provided by Contractor, and Contractor cannot rely upon Owner's liability policies for any of Contractor's obligations to the Owner, Engineer, or third parties.

Copyright © 2013 National Society of Professional Engineers, American Council of Engineering Companies, and American Society of Civil Engineers. All rights reserved.

6.05 Property Insurance

A. *Builder's Risk*: Unless otherwise provided in the Supplementary Conditions, Contractor shall purchase and maintain builder's risk insurance upon the Work on a completed value basis, in the amount of the full insurable replacement cost thereof (subject to such deductible amounts as may be provided in the Supplementary Conditions or required by Laws and Regulations). This insurance shall:

1. include the Owner and Contractor as named insureds, and all Subcontractors, and any individuals or entities required by the Supplementary Conditions to be insured under such builder's risk policy, as insureds or named insureds. For purposes of the remainder of this Paragraph 6.05, Paragraphs 6.06 and 6.07, and any corresponding Supplementary Conditions, the parties required to be insured shall collectively be referred to as "insureds."

2. be written on a builder's risk "all risk" policy form that shall at least include insurance for physical loss or damage to the Work, temporary buildings, falsework, and materials and equipment in transit, and shall insure against at least the following perils or causes of loss: fire; lightning; windstorm; riot; civil commotion; terrorism; vehicle impact; aircraft; smoke; theft; vandalism and malicious mischief; mechanical breakdown, boiler explosion, and artificially generated electric current; earthquake; volcanic activity, and other earth movement; flood; collapse; explosion; debris removal; demolition occasioned by enforcement of Laws and Regulations; water damage (other than that caused by flood); and such other perils or causes of loss as may be specifically required by the Supplementary Conditions. If insurance against mechanical breakdown, boiler explosion, and artificially generated electric current; earthquake; volcanic activity, and other earth movement; or flood, are not commercially available under builder's risk policies, by endorsement or otherwise, such insurance may be provided through other insurance policies acceptable to Owner and Contractor.

3. cover, as insured property, at least the following: (a) the Work and all materials, supplies, machinery, apparatus, equipment, fixtures, and other property of a similar nature that are to be incorporated into or used in the preparation, fabrication, construction, erection, or completion of the Work, including Owner-furnished or assigned property; (b) spare parts inventoryrequired within the scope of the Contract; and (c) temporary works which are not intended to form part of the permanent constructed Work but which are intended to provide working access to the Site, or to the Work under construction, or which are intended to provide temporary support for the Work under construction, including scaffolding, form work, fences, shoring,falsework, and temporary structures.

4. cover expenses incurred in the repair or replacement of any insured property (including but not limited to fees and charges of engineers and architects).

5. extend to cover damage or loss to insured property while in temporary storage at the Site or in a storage location outside the Site (but not including property stored at the premises of a manufacturer or Supplier).

6. extend to cover damage or loss to insured property while in transit.

Copyright © 2013 National Society of Professional Engineers, American Council of Engineering Companies, and American Society of Civil Engineers. All rights reserved.

7. allow for partial occupation or use of the Work by Owner, such that those portions of the Work that are not yet occupied or used by Owner shall remain covered by the builder's risk insurance.
8. allow for the waiver of the insurer's subrogation rights, as set forth below.
9. provide primary coverage for all losses and damages caused by the perils or causes of loss covered.
10. not include a co-insurance clause.
11. include an exception for ensuing losses from physical damage or loss with respect to any defective workmanship, design, or materials exclusions.
12. include performance/hot testing and start-up.
13. be maintained in effect, subject to the provisions herein regarding Substantial Completion and partial occupancy or use of the Work by Owner, until the Work is complete.

B. *Notice of Cancellation or Change*: All the policies of insurance (and the certificates or other evidence thereof) required to be purchased and maintained in accordance with this Paragraph 6.05 will contain a provision or endorsement that the coverage afforded will not be canceled or materially changed or renewal refused until at least 10 days prior written notice has been given to the purchasing policyholder. Within three days of receipt of any such written notice, the purchasing policyholder shall provide a copy of the notice to each other insured.

C. *Deductibles*: The purchaser of any required builder's risk or property insurance shall pay for costs not covered because of the application of a policy deductible.

D. *Partial Occupancy or Use by Owner*: If Owner will occupy or use a portion or portions of the Work prior to Substantial Completion of all the Work as provided in Paragraph 15.04, then Owner (directly, if it is the purchaser of the builder's risk policy, or through Contractor) will provide notice of such occupancy or use to the builder's risk insurer. The builder's risk insurance shall not be canceled or permitted to lapse on account of any such partial use or occupancy; rather, those portions of the Work that are occupied or used by Owner may come off the builder's risk policy, while those portions of the Work not yet occupied or used by Owner shall remain covered by the builder's risk insurance.

E. *Additional Insurance*: If Contractor elects to obtain other special insurance to be included in or supplement the builder's risk or property insurance policies provided under this Paragraph 6.05, it may do so at Contractor's expense.

F. *Insurance of Other Property*: If the express insurance provisions of the Contract do not require or address the insurance of a property item or interest, such as tools, construction equipment, or other personal property owned by Contractor, a Subcontractor, or an employee of Contractor or a Subcontractor, then the entity or individual owning such property item will be responsible for deciding whether to insure it, and if so in what amount.

6.06 Waiver of Rights

A. All policies purchased in accordance with Paragraph 6.05, expressly including the builder's risk policy, shall contain provisions to the effect that in the event of

Copyright © 2013 National Society of Professional Engineers, American Council of Engineering Companies, and American Society of Civil Engineers. All rights reserved.

payment of any loss or damage the insurers will have no rights of recovery against any insureds thereunder, or against Engineer or its consultants, or their officers, directors, members, partners, employees, agents, consultants, or subcontractors. Owner and Contractor waive all rights against each other and the respective officers, directors, members, partners, employees, agents, consultants, and subcontractors of each and any of them, for all losses and damages caused by, arising out of, or resulting from any of the perils or causes of loss covered by such policies and any other property insurance applicable to the Work; and, in addition, waive all such rights against Engineer, its consultants, all Subcontractors, all individuals or entities identified in the Supplementary Conditions as insureds, and the officers, directors, members, partners, employees, agents, consultants, and subcontractors of each and any of them, under such policies for losses and damages so caused. None of theabove waivers shall extend to the rights that any party making such waiver may haveto the proceeds of insurance held by Owner or Contractor as trustee or fiduciary, or otherwise payable under any policy so issued.

B. Owner waives all rights against Contractor, Subcontractors, and Engineer, and the officers, directors, members, partners, employees, agents, consultants and subcontractors of each and any of them, for:

1. loss due to business interruption, loss of use, or other consequential loss extending beyond direct physical loss or damage to Owner's property or the Work caused by, arising out of, or resulting from fire or other perils whether or not insured by Owner; and

2. loss or damage to the completed Project or part thereof caused by, arising out of, or resulting from fire or other insured peril or cause of loss covered by any property insurance maintained on the completed Project or part thereof by Owner during partial occupancy or use pursuant to Paragraph 15.04, after Substantial Completion pursuant to Paragraph 15.03, or after final payment pursuant to Paragraph 15.06.

C. Any insurance policy maintained by Owner covering any loss, damage or consequential loss referred to in Paragraph 6.06.B shall contain provisions to the effect that in the event of payment of any such loss, damage, or consequential loss, the insurers will have no rights of recovery against Contractor, Subcontractors, or Engineer, or the officers, directors, members, partners, employees, agents, consultants, or subcontractors of each and any of them.

D. Contractor shall be responsible for assuring that the agreement under which a Subcontractor performs a portion of the Work contains provisions whereby the Subcontractor waives all rights against Owner, Contractor, all individuals or entities identified in the Supplementary Conditions as insureds, the Engineer and its consultants, and the officers, directors, members, partners, employees, agents, consultants, and subcontractors of each and any of them, for all losses and damages caused by, arising out of, relating to, or resulting from any of the perils or causes of loss covered by builder's risk insurance and any other property insurance applicable to the Work.

6.07 Receipt and Application of Property Insurance Proceeds

A. Any insured loss under the builder's risk and other policies of insurance required by Paragraph 6.05 will be adjusted and settled with the named insured that purchased

Copyright © 2013 National Society of Professional Engineers, American Council of Engineering Companies, and American Society of Civil Engineers. All rights reserved.

the policy. Such named insured shall act as fiduciary for the other insureds, and give notice to such other insureds that adjustment and settlement of a claim is in progress. Any other insured may state its position regarding a claim for insured loss in writing within 15 days after notice of such claim.

B. Proceeds for such insured losses may be made payable by the insurer either jointly to multiple insureds, or to the named insured that purchased the policy in its own right and as fiduciary for other insureds, subject to the requirements of any applicable mortgage clause. A named insured receiving insurance proceeds under the builder's risk and other policies of insurance required by Paragraph 6.05 shall distribute such proceeds in accordance with such agreement as the parties in interest may reach, or as otherwise required under the dispute resolution provisions of this Contract or applicable Laws and Regulations.

C. If no other special agreement is reached, the damaged Work shall be repaired or replaced, the money so received applied on account thereof, and the Work and the cost thereof covered by Change Order, if needed.

ARTICLE 7 – CONTRACTOR'S RESPONSIBILITIES

7.01 Supervision and Superintendence

A. Contractor shall supervise, inspect, and direct the Work competently and efficiently, devoting such attention thereto and applying such skills and expertise as may be necessary to perform the Work in accordance with the Contract Documents. Contractor shall be solely responsible for the means, methods, techniques,sequences, and procedures of construction.

B. At all times during the progress of the Work, Contractor shall assign a competent resident superintendent who shall not be replaced without written notice to Owner and Engineer except under extraordinary circumstances.

7.02 Labor; Working Hours

A. Contractor shall provide competent, suitably qualified personnel to survey and lay out the Work and perform construction as required by the Contract Documents. Contractor shall at all times maintain good discipline and order at the Site.

B. Except as otherwise required for the safety or protection of persons or the Work or property at the Site or adjacent thereto, and except as otherwise stated in the Contract Documents, all Work at the Site shall be performed during regular working hours, Monday through Friday. Contractor will not perform Work on a Saturday, Sunday, or any legal holiday. Contractor may perform Work outside regular working hours or on Saturdays, Sundays, or legal holidays only with Owner's written consent, which will not be unreasonably withheld.

7.03 Services, Materials, and Equipment

A. Unless otherwise specified in the Contract Documents, Contractor shall provide and assume full responsibility for all services, materials, equipment, labor, transportation, construction equipment and machinery, tools, appliances, fuel, power, light, heat, telephone, water, sanitary facilities, temporary facilities, and all other facilities and incidentals necessary for the performance, testing, start up, and completion of the

Copyright © 2013 National Society of Professional Engineers, American Council of Engineering Companies, and American Society of Civil Engineers. All rights reserved.

Work, whether or not such items are specifically called for in the Contract Documents.

B. All materials and equipment incorporated into the Work shall be of good quality and new, except as otherwise provided in the Contract Documents. All special warranties and guarantees required by the Specifications shall expressly run to the benefit of Owner. If required by Engineer, Contractor shall furnish satisfactory evidence (including reports of required tests) as to the source, kind, and quality of materials and equipment.

C. All materials and equipment shall be stored, applied, installed, connected, erected, protected, used, cleaned, and conditioned in accordance with instructions of the applicable Supplier, except as otherwise may be provided in the ContractDocuments.

7.04 "Or Equals"

A. Whenever an item of material or equipment is specified or described in the Contract Documents by using the name of a proprietary item or the name of a particular Supplier, the Contract Price has been based upon Contractor furnishing such item as specified. The specification or description of such an item is intended to establish the type, function, appearance, and quality required. Unless the specification or description contains or is followed by words reading that no like, equivalent, or "or equal" item is permitted, Contractor may request that Engineer authorize the use of other items of material or equipment, or items from other proposed suppliers under the circumstances described below.

1. If Engineer in its sole discretion determines that an item of material or equipment proposed by Contractor is functionally equal to that named and sufficiently similar so that no change in related Work will be required, Engineer shall deem it an "or equal" item. For the purposes of this paragraph,a proposed item of material or equipment will be considered functionally equal to an item so named if:

a. in the exercise of reasonable judgment Engineer determines that:

1) it is at least equal in materials of construction, quality, durability, appearance, strength, and design characteristics;

2) it will reliably perform at least equally well the function and achieve the results imposed by the design concept of the completed Project as a functioning whole;

3) it has a proven record of performance and availability of responsive service; and

4) it is not objectionable to Owner.

b. Contractor certifies that, if approved and incorporated into the Work:

1) there will be no increase in cost to the Owner or increase in Contract Times; and

2) it will conform substantially to the detailed requirements of the item named in the Contract Documents.

Copyright © 2013 National Society of Professional Engineers, American Council of Engineering Companies, and American Society of Civil Engineers. All rights reserved.

B. *Contractor's Expense*: Contractor shall provide all data in support of any proposed "or equal" item at Contractor's expense.

C. *Engineer's Evaluation and Determination*: Engineer will be allowed a reasonable time to evaluate each "or-equal" request. Engineer may require Contractor to furnish additional data about the proposed "or-equal" item. Engineer will be the sole judge of acceptability. No "or-equal" item will be ordered, furnished, installed, or utilized until Engineer's review is complete and Engineer determines that the proposed item is an "or-equal", which will be evidenced by an approved Shop Drawing or other written communication. Engineer will advise Contractor in writing of any negative determination.

D. *Effect of Engineer's Determination*: Neither approval nor denial of an "or-equal" request shall result in any change in Contract Price. The Engineer's denial of an "or-equal" request shall be final and binding, and may not be reversed through an appeal under any provision of the Contract Documents.

E. *Treatment as a Substitution Request*: If Engineer determines that an item of material or equipment proposed by Contractor does not qualify as an "or-equal" item, Contractor may request that Engineer considered the proposed item as a substitute pursuant to Paragraph 7.05.

7.05 Substitutes

A. Unless the specification or description of an item of material or equipment required to be furnished under the Contract Documents contains or is followed by words reading that no substitution is permitted, Contractor may request that Engineer authorize the use of other items of material or equipment under the circumstances described below. To the extent possible such requests shall be made before commencement of related construction at the Site.

1. Contractor shall submit sufficient information as provided below to allow Engineer to determine if the item of material or equipment proposed is functionally equivalent to that named and an acceptable substitute therefor. Engineer will not accept requests for review of proposed substitute items of material or equipment from anyone other than Contractor.

2. The requirements for review by Engineer will be as set forth in Paragraph 7.05.B, as supplemented by the Specifications, and as Engineer may decide is appropriate under the circumstances.

3. Contractor shall make written application to Engineer for review of a proposed substitute item of material or equipment that Contractor seeks to furnish or use. The application:

a. shall certify that the proposed substitute item will:

1) perform adequately the functions and achieve the results called for by the general design,

2) be similar in substance to that specified, and

3) be suited to the same use as that specified.

Copyright © 2013 National Society of Professional Engineers, American Council of Engineering Companies, and American Society of Civil Engineers. All rights reserved.

b. will state:

1) the extent, if any, to which the use of the proposed substitute item will necessitate a change in Contract Times,

2) whether use of the proposed substitute item in the Work will require a change in any of the Contract Documents (or in the provisions of any other direct contract with Owner for other work on the Project) to adapt the design to the proposed substitute item, and

3) whether incorporation or use of the proposed substitute item in connection with the Work is subject to payment of any license fee or royalty.

c. will identify:

1) all variations of the proposed substitute item from that specified, and

2) available engineering, sales, maintenance, repair, and replacement services.

d. shall contain an itemized estimate of all costs or credits that will result directly or indirectly from use of such substitute item, including but not limited to changes in Contract Price, shared savings, costs of redesign, and claims of other contractors affected by any resulting change.

B. *Engineer's Evaluation and Determination*: Engineer will be allowed a reasonable time to evaluate each substitute request, and to obtain comments and direction from Owner. Engineer may require Contractor to furnish additional data about the proposed substitute item. Engineer will be the sole judge of acceptability. No substitute will be ordered, furnished, installed, or utilized until Engineer's review is complete and Engineer determines that the proposed item is an acceptable substitute. Engineer's determination will be evidenced by a Field Order or a proposed Change Order accounting for the substitution itself and all related impacts, including changes in Contract Price or Contract Times. Engineer will advise Contractor in writing of any negative determination.

C. *Special Guarantee*: Owner may require Contractor to furnish at Contractor's expense a special performance guarantee or other surety with respect to any substitute.

D. *Reimbursement of Engineer's Cost*: Engineer will record Engineer's costs in evaluating a substitute proposed or submitted by Contractor. Whether or not Engineer approves a substitute so proposed or submitted by Contractor, Contractor shall reimburse Owner for the reasonable charges of Engineer for evaluating each such proposed substitute. Contractor shall also reimburse Owner for the reasonable charges of Engineer for making changes in the Contract Documents (or in theprovisions of any other direct contract with Owner) resulting from the acceptance of each proposed substitute.

E. *Contractor's Expense*: Contractor shall provide all data in support of any proposed substitute at Contractor's expense.

F. *Effect of Engineer's Determination*: If Engineer approves the substitution request, Contractor shall execute the proposed Change Order and proceed with the substitution. The Engineer's denial of a substitution request shall be final and

Copyright © 2013 National Society of Professional Engineers, American Council of Engineering Companies, and American Society of Civil Engineers. All rights reserved.

binding, and may not be reversed through an appeal under any provision of the Contract Documents. Contractor may challenge the scope of reimbursement costs imposed under Paragraph 7.05.D, by timely submittal of a Change Proposal.

7.06 Concerning Subcontractors, Suppliers, and Others

A. Contractor may retain Subcontractors and Suppliers for the performance of parts of the Work. Such Subcontractors and Suppliers must be acceptable to Owner.

B. Contractor shall retain specific Subcontractors, Suppliers, or other individuals or entities for the performance of designated parts of the Work if required by the Contract to do so.

C. Subsequent to the submittal of Contractor's Bid or final negotiation of the terms of the Contract, Owner may not require Contractor to retain any Subcontractor, Supplier, or other individual or entity to furnish or perform any of the Work against which Contractor has reasonable objection.

D. Prior to entry into any binding subcontract or purchase order, Contractor shall submit to Owner the identity of the proposed Subcontractor or Supplier (unless Owner has already deemed such proposed Subcontractor or Supplier acceptable, during the bidding process or otherwise). Such proposed Subcontractor or Supplier shall be deemed acceptable to Owner unless Owner raises a substantive, reasonable objection within five days.

E. Owner may require the replacement of any Subcontractor, Supplier, or other individual or entity retained by Contractor to perform any part of the Work. Owner also may require Contractor to retain specific replacements; provided, however, that Owner may not require a replacement to which Contractor has a reasonable objection. If Contractor has submitted the identity of certain Subcontractors, Suppliers, or other individuals or entities for acceptance by Owner, and Owner has accepted it (either in writing or by failing to make written objection thereto), then Owner may subsequently revoke the acceptance of any such Subcontractor, Supplier,or other individual or entity so identified solely on the basis of substantive, reasonable objection after due investigation. Contractor shall submit an acceptable replacement for the rejected Subcontractor, Supplier, or other individual or entity.

F. If Owner requires the replacement of any Subcontractor, Supplier, or other individual or entity retained by Contractor to perform any part of the Work, then Contractor shall be entitled to an adjustment in Contract Price or Contract Times, or both, with respect to the replacement; and Contractor shall initiate a Change Proposal for such adjustment within 30 days of Owner's requirement of replacement.

G. No acceptance by Owner of any such Subcontractor, Supplier, or other individual or entity, whether initially or as a replacement, shall constitute a waiver of the right of Owner to the completion of the Work in accordance with the Contract Documents.

H. On a monthly basis Contractor shall submit to Engineer a complete list of all Subcontractors and Suppliers having a direct contract with Contractor, and of all other Subcontractors and Suppliers known to Contractor at the time of submittal.

I. Contractor shall be fully responsible to Owner and Engineer for all acts and omissions of the Subcontractors, Suppliers, and other individuals or entities

Copyright © 2013 National Society of Professional Engineers, American Council of Engineering Companies, and American Society of Civil Engineers. All rights reserved.

performing or furnishing any of the Work just as Contractor is responsible for Contractor's own acts and omissions.

J. Contractor shall be solely responsible for scheduling and coordinating the work of Subcontractors, Suppliers, and all other individuals or entities performing or furnishing any of the Work.

K. Contractor shall restrict all Subcontractors, Suppliers, and such other individuals or entities performing or furnishing any of the Work from communicating with Engineer or Owner, except through Contractor or in case of an emergency, or as otherwise expressly allowed herein.

L. The divisions and sections of the Specifications and the identifications of any Drawings shall not control Contractor in dividing the Work among Subcontractors or Suppliers or delineating the Work to be performed by any specific trade.

M. All Work performed for Contractor by a Subcontractor or Supplier shall be pursuant to an appropriate contractual agreement that specifically binds the Subcontractor or Supplier to the applicable terms and conditions of the Contract Documents for the benefit of Owner and Engineer.

N. Owner may furnish to any Subcontractor or Supplier, to the extent practicable, information about amounts paid to Contractor on account of Work performed for Contractor by the particular Subcontractor or Supplier.

O. Nothing in the Contract Documents:

1. shall create for the benefit of any such Subcontractor, Supplier, or other individual or entity any contractual relationship between Owner or Engineer and any such Subcontractor, Supplier, or other individual or entity; nor

2. shall create any obligation on the part of Owner or Engineer to pay or to see to the payment of any money due any such Subcontractor, Supplier, or other individual or entity except as may otherwise be required by Laws and Regulations.

7.07 Patent Fees and Royalties

A. Contractor shall pay all license fees and royalties and assume all costs incident to the use in the performance of the Work or the incorporation in the Work of any invention, design, process, product, or device which is the subject of patent rights or copyrights held by others. If a particular invention, design, process, product, ordevice is specified in the Contract Documents for use in the performance of theWork and if, to the actual knowledge of Owner or Engineer, its use is subject to patent rights or copyrights calling for the payment of any license fee or royalty to others, the existence of such rights shall be disclosed by Owner in the Contract Documents.

B. To the fullest extent permitted by Laws and Regulations, Owner shall indemnify and hold harmless Contractor, and its officers, directors, members, partners, employees, agents, consultants, and subcontractors from and against all claims, costs, losses, and damages (including but not limited to all fees and charges of engineers, architects, attorneys, and other professionals, and all court or arbitration or other dispute resolution costs) arising out of or relating to any infringement of patent rights or copyrights incident to the use in the performance of the Work or resulting from the

Copyright © 2013 National Society of Professional Engineers, American Council of Engineering Companies, and American Society of Civil Engineers. All rights reserved.

incorporation in the Work of any invention, design, process, product, or device specified in the Contract Documents, but not identified as being subject to payment of any license fee or royalty to others required by patent rights or copyrights.

C. To the fullest extent permitted by Laws and Regulations, Contractor shall indemnify and hold harmless Owner and Engineer, and the officers, directors, members, partners, employees, agents, consultants and subcontractors of each and any of them from and against all claims, costs, losses, and damages (including but not limited to all fees and charges of engineers, architects, attorneys, and other professionals andall court or arbitration or other dispute resolution costs) arising out of or relating to any infringement of patent rights or copyrights incident to the use in the performanceof the Work or resulting from the incorporation in the Work of any invention, design,process, product, or device not specified in the Contract Documents.

7.08 Permits

A. Unless otherwise provided in the Contract Documents, Contractor shall obtain and pay for all construction permits and licenses. Owner shall assist Contractor, when necessary, in obtaining such permits and licenses. Contractor shall pay all governmental charges and inspection fees necessary for the prosecution of the Work which are applicable at the time of the submission of Contractor's Bid (or when Contractor became bound under a negotiated contract). Owner shall pay all charges of utility owners for connections for providing permanent service to the Work

7.09 Taxes

A. Contractor shall pay all sales, consumer, use, and other similar taxes required to be paid by Contractor in accordance with the Laws and Regulations of the place of the Project which are applicable during the performance of the Work.

7.10 Laws and Regulations

A. Contractor shall give all notices required by and shall comply with all Laws and Regulations applicable to the performance of the Work. Except where otherwise expressly required by applicable Laws and Regulations, neither Owner nor Engineer shall be responsible for monitoring Contractor's compliance with any Laws or Regulations.

B. If Contractor performs any Work or takes any other action knowing or having reason to know that it is contrary to Laws or Regulations, Contractor shall bear all resulting costs and losses, and shall indemnify and hold harmless Owner and Engineer, and the officers, directors, members, partners, employees, agents, consultants, and subcontractors of each and any of them from and against all claims, costs, losses, and damages (including but not limited to all fees and charges of engineers, architects, attorneys, and other professionals and all court or arbitration or other dispute resolution costs) arising out of or relating to such Work or other action. It shall not be Contractor's responsibility to make certain that the Work described in the Contract Documents is in accordance with Laws and Regulations, but this shall not relieve Contractor of Contractor's obligations under Paragraph 3.03.

C. Owner or Contractor may give notice to the other party of any changes after the submission of Contractor's Bid (or after the date when Contractor became bound under a negotiated contract) in Laws or Regulations having an effect on the cost or time of performance of the Work, including but not limited to changes in Laws or

Copyright © 2013 National Society of Professional Engineers, American Council of Engineering Companies, and American Society of Civil Engineers. All rights reserved.

Regulations having an effect on procuring permits and on sales, use, value-added, consumption, and other similar taxes. If Owner and Contractor are unable to agree on entitlement to or on the amount or extent, if any, of any adjustment in Contract Price or Contract Times resulting from such changes, then within 30 days of such notice Contractor may submit a Change Proposal, or Owner may initiate a Claim.

7.11 Record Documents

A. Contractor shall maintain in a safe place at the Site one printed record copy of all Drawings, Specifications, Addenda, Change Orders, Work Change Directives, Field Orders, written interpretations and clarifications, and approved Shop Drawings. Contractor shall keep such record documents in good order and annotate them to show changes made during construction. These record documents, together with all approved Samples, will be available to Engineer for reference. Upon completion of the Work, Contractor shall deliver these record documents to Engineer.

7.12 Safety and Protection

A. Contractor shall be solely responsible for initiating, maintaining, and supervising all safety precautions and programs in connection with the Work. Such responsibility does not relieve Subcontractors of their responsibility for the safety of persons or property in the performance of their work, nor for compliance with applicable safety Laws and Regulations. Contractor shall take all necessary precautions for the safety of, and shall provide the necessary protection to prevent damage, injury, or loss to:

1. all persons on the Site or who may be affected by the Work;
2. all the Work and materials and equipment to be incorporated therein, whether in storage on or off the Site; and
3. other property at the Site or adjacent thereto, including trees, shrubs, lawns, walks, pavements, roadways, structures, other work in progress, utilities, and Underground Facilities not designated for removal, relocation, or replacement in the course of construction.

B. Contractor shall comply with all applicable Laws and Regulations relating to the safety of persons or property, or to the protection of persons or property fromdamage, injury, or loss; and shall erect and maintain all necessary safeguards forsuch safety and protection. Contractor shall notify Owner; the owners of adjacent property, Underground Facilities, and other utilities; and other contractors and utility owners performing work at or adjacent to the Site, when prosecution of the Work may affect them, and shall cooperate with them in the protection, removal, relocation, and replacement of their property or work in progress.

C. Contractor shall comply with the applicable requirements of Owner's safety programs, if any. The Supplementary Conditions identify any Owner's safety programs that are applicable to the Work.

D. Contractor shall inform Owner and Engineer of the specific requirements of Contractor's safety program with which Owner's and Engineer's employees and representatives must comply while at the Site.

E. All damage, injury, or loss to any property referred to in Paragraph 7.12.A.2 or 7.12.A.3 caused, directly or indirectly, in whole or in part, by Contractor, any Subcontractor, Supplier, or any other individual or entity directly or indirectly

Copyright © 2013 National Society of Professional Engineers, American Council of Engineering Companies, and American Society of Civil Engineers. All rights reserved.

employed by any of them to perform any of the Work, or anyone for whose acts any of them may be liable, shall be remedied by Contractor at its expense (exceptdamage or loss attributable to the fault of Drawings or Specifications or to the acts oromissions of Owner or Engineer or anyone employed by any of them, or anyone for whose acts any of them may be liable, and not attributable, directly or indirectly, in whole or in part, to the fault or negligence of Contractor or any Subcontractor, Supplier, or other individual or entity directly or indirectly employed by any ofthem).

F. Contractor's duties and responsibilities for safety and protection shall continue until such time as all the Work is completed and Engineer has issued a notice to Owner and Contractor in accordance with Paragraph 15.06.B that the Work is acceptable (except as otherwise expressly provided in connection with Substantial Completion).

G. Contractor's duties and responsibilities for safety and protection shall resume whenever Contractor or any Subcontractor or Supplier returns to the Site to fulfill warranty or correction obligations, or to conduct other tasks arising from the Contract Documents.

7.13 Safety Representative

A. Contractor shall designate a qualified and experienced safety representative at the Site whose duties and responsibilities shall be the prevention of accidents and the maintaining and supervising of safety precautions and programs.

7.14 Hazard Communication Programs

A. Contractor shall be responsible for coordinating any exchange of material safety data sheets or other hazard communication information required to be made available to or exchanged between or among employers at the Site in accordance with Laws or Regulations.

7.15 Emergencies

A. In emergencies affecting the safety or protection of persons or the Work or property at the Site or adjacent thereto, Contractor is obligated to act to prevent threatened damage, injury, or loss. Contractor shall give Engineer prompt written notice if Contractor believes that any significant changes in the Work or variations from the Contract Documents have been caused thereby or are required as a result thereof. If Engineer determines that a change in the Contract Documents is required because of the action taken by Contractor in response to such an emergency, a Work Change Directive or Change Order will be issued.

7.16 Shop Drawings, Samples, and Other Submittals

A. *Shop Drawing and Sample Submittal Requirements*:

1. Before submitting a Shop Drawing or Sample, Contractor shall have:

a. reviewed and coordinated the Shop Drawing or Sample with other Shop Drawings and Samples and with the requirements of the Work and the Contract Documents;

b. determined and verified all field measurements, quantities, dimensions, specified performance and design criteria, installation requirements, materials, catalog numbers, and similar information with respect thereto;

Copyright © 2013 National Society of Professional Engineers, American Council of Engineering Companies, and American Society of Civil Engineers. All rights reserved.

c. determined and verified the suitability of all materials and equipment offered with respect to the indicated application, fabrication, shipping, handling, storage, assembly, and installation pertaining to the performance of the Work; and

d. determined and verified all information relative to Contractor's responsibilities for means, methods, techniques, sequences, and procedures of construction, and safety precautions and programs incident thereto.

2. Each submittal shall bear a stamp or specific written certification that Contractor has satisfied Contractor's obligations under the Contract Documents with respect to Contractor's review of that submittal, and that Contractor approves the submittal.

3. With each submittal, Contractor shall give Engineer specific written notice of any variations that the Shop Drawing or Sample may have from the requirements of the Contract Documents. This notice shall be set forth in a written communication separate from the Shop Drawings or Sample submittal; and, in addition, in the case of Shop Drawings by a specific notation made on each Shop Drawing submitted to Engineer for review and approval of each such variation.

B. *Submittal Procedures for Shop Drawings and Samples*: Contractor shall submit Shop Drawings and Samples to Engineer for review and approval in accordance with the accepted Schedule of Submittals. Each submittal will be identified as Engineer may require.

1. *Shop Drawings*:

a. Contractor shall submit the number of copies required in the Specifications.

b. Data shown on the Shop Drawings will be complete with respect to quantities, dimensions, specified performance and design criteria, materials, and similar data to show Engineer the services, materials, and equipment Contractor proposes to provide and to enable Engineer to review the information for the limited purposes required by Paragraph 7.16.D.

2. *Samples*:

a. Contractor shall submit the number of Samples required in the Specifications.

b. Contractor shall clearly identify each Sample as to material, Supplier, pertinent data such as catalog numbers, the use for which intended and other data as Engineer may require to enable Engineer to review the submittal for the limited purposes required by Paragraph 7.16.D.

3. Where a Shop Drawing or Sample is required by the Contract Documents or the Schedule of Submittals, any related Work performed prior to Engineer's review and approval of the pertinent submittal will be at the sole expense and responsibility of Contractor.

C. *Other Submittals*: Contractor shall submit other submittals to Engineer in accordance with the accepted Schedule of Submittals, and pursuant to the applicable terms of the Specifications.

Copyright © 2013 National Society of Professional Engineers, American Council of Engineering Companies, and American Society of Civil Engineers. All rights reserved.

D. *Engineer's Review*:

1. Engineer will provide timely review of Shop Drawings and Samples in accordance with the Schedule of Submittals acceptable to Engineer. Engineer's review and approval will be only to determine if the items covered by the submittals will, after installation or incorporation in the Work, conform to the information given in the Contract Documents and be compatible with the design concept of the completed Project as a functioning whole as indicated by the Contract Documents.

2. Engineer's review and approval will not extend to means, methods,techniques, sequences, or procedures of construction or to safety precautionsor programs incident thereto.

3. Engineer's review and approval of a separate item as such will not indicate approval of the assembly in which the item functions.

4. Engineer's review and approval of a Shop Drawing or Sample shall not relieve Contractor from responsibility for any variation from the requirements of the Contract Documents unless Contractor has complied with the requirements of Paragraph 7.16.A.3 and Engineer has given written approval of each such variation by specific written notation thereof incorporated in or accompanying the Shop Drawing or Sample. Engineer will document any such approved variation from the requirements of the Contract Documents in a Field Order.

5. Engineer's review and approval of a Shop Drawing or Sample shall not relieve Contractor from responsibility for complying with the requirements of Paragraph 7.16.A and B.

6. Engineer's review and approval of a Shop Drawing or Sample, or of a variation from the requirements of the Contract Documents, shall not, under any circumstances, change the Contract Times or Contract Price, unless such changes are included in a Change Order.

7. Neither Engineer's receipt, review, acceptance or approval of a Shop Drawing, Sample, or other submittal shall result in such item becoming a Contract Document.

8. Contractor shall perform the Work in compliance with the requirements and commitments set forth in approved Shop Drawings and Samples, subject to the provisions of Paragraph 7.16.D.4.

E. *Resubmittal Procedures*:

1. Contractor shall make corrections required by Engineer and shall return the required number of corrected copies of Shop Drawings and submit, as required, new Samples for review and approval. Contractor shall direct specific attention in writing to revisions other than the corrections called forby Engineer on previous submittals.

2. Contractor shall furnish required submittals with sufficient information and accuracy to obtain required approval of an item with no more than three submittals. Engineer will record Engineer's time for reviewing a fourth or subsequent submittal of a Shop Drawings, sample, or other item requiring approval, and Contractor shall be responsible for Engineer's charges to Owner

Copyright © 2013 National Society of Professional Engineers, American Council of Engineering Companies, and American Society of Civil Engineers. All rights reserved.

for such time. Owner may impose a set-off against payments due to Contractor to secure reimbursement for such charges.

3. If Contractor requests a change of a previously approved submittal item, Contractor shall be responsible for Engineer's charges to Owner for its review time, and Owner may impose a set-off against payments due to Contractor to secure reimbursement for such charges, unless the need for such change is beyond the control of Contractor.

7.17 Contractor's General Warranty and Guarantee

A. Contractor warrants and guarantees to Owner that all Work will be in accordance with the Contract Documents and will not be defective. Engineer and its officers, directors, members, partners, employees, agents, consultants, and subcontractors shall be entitled to rely on Contractor's warranty and guarantee.

B. Contractor's warranty and guarantee hereunder excludes defects or damage caused by:

1. abuse, modification, or improper maintenance or operation by persons other than Contractor, Subcontractors, Suppliers, or any other individual or entity for whom Contractor is responsible; or

2. normal wear and tear under normal usage.

C. Contractor's obligation to perform and complete the Work in accordance with the Contract Documents shall be absolute. None of the following will constitute an acceptance of Work that is not in accordance with the Contract Documents or a release of Contractor's obligation to perform the Work in accordance with the Contract Documents:

1. observations by Engineer;

2. recommendation by Engineer or payment by Owner of any progress or final payment;

3. the issuance of a certificate of Substantial Completion by Engineer or any payment related thereto by Owner;

4. use or occupancy of the Work or any part thereof by Owner;

5. any review and approval of a Shop Drawing or Sample submittal;

6. the issuance of a notice of acceptability by Engineer;

7. any inspection, test, or approval by others; or

8. any correction of defective Work by Owner.

D. If the Contract requires the Contractor to accept the assignment of a contract entered into by Owner, then the specific warranties, guarantees, and correction obligations contained in the assigned contract shall govern with respect to Contractor's performance obligations to Owner for the Work described in the assigned contract.

7.18 Indemnification

A. To the fullest extent permitted by Laws and Regulations, and in addition to any other obligations of Contractor under the Contract or otherwise, Contractor shall indemnify and hold harmless Owner and Engineer, and the officers, directors,

Copyright © 2013 National Society of Professional Engineers, American Council of Engineering Companies, and American Society of Civil Engineers. All rights reserved.

members, partners, employees, agents, consultants and subcontractors of each and any of them from and against all claims, costs, losses, and damages (including butnot limited to all fees and charges of engineers, architects, attorneys, and other professionals and all court or arbitration or other dispute resolution costs) arising out of or relating to the performance of the Work, provided that any such claim, cost, loss, or damage is attributable to bodily injury, sickness, disease, or death, or toinjury to or destruction of tangible property (other than the Work itself), including the loss of use resulting therefrom but only to the extent caused by any negligent act or omission of Contractor, any Subcontractor, any Supplier, or any individual or entity directly or indirectly employed by any of them to perform any of the Work or anyone for whose acts any of them may be liable.

B. In any and all claims against Owner or Engineer or any of their officers, directors, members, partners, employees, agents, consultants, or subcontractors by any employee (or the survivor or personal representative of such employee) of Contractor, any Subcontractor, any Supplier, or any individual or entity directly or indirectly employed by any of them to perform any of the Work, or anyone for whose acts any of them may be liable, the indemnification obligation under Paragraph 7.18.A shall not be limited in any way by any limitation on the amount or type of damages, compensation, or benefits payable by or for Contractor or any such Subcontractor, Supplier, or other individual or entity under workers' compensation acts, disability benefit acts, or other employee benefit acts.

C. The indemnification obligations of Contractor under Paragraph 7.18.A shall notextend to the liability of Engineer and Engineer's officers, directors, members, partners, employees, agents, consultants and subcontractors arising out of:

1. the preparation or approval of, or the failure to prepare or approve maps, Drawings, opinions, reports, surveys, Change Orders, designs, or Specifications; or

2. giving directions or instructions, or failing to give them, if that is the primary cause of the injury or damage.

7.19 Delegation of Professional Design Services

A. Contractor will not be required to provide professional design services unless such services are specifically required by the Contract Documents for a portion of the Work or unless such services are required to carry out Contractor's responsibilities for construction means, methods, techniques, sequences and procedures. Contractor shall not be required to provide professional services in violation of applicable Laws and Regulations.

B. If professional design services or certifications by a design professional related to systems, materials, or equipment are specifically required of Contractor by the Contract Documents, Owner and Engineer will specify all performance and design criteria that such services must satisfy. Contractor shall cause such services or certifications to be provided by a properly licensed professional, whose signature and seal shall appear on all drawings, calculations, specifications, certifications, andother submittals prepared by such professional. Shop Drawings and other submittals related to the Work designed or certified by such professional, if prepared by others, shall bear such professional's written approval when submitted to Engineer.

Copyright © 2013 National Society of Professional Engineers, American Council of Engineering Companies, and American Society of Civil Engineers. All rights reserved.

C. Owner and Engineer shall be entitled to rely upon the adequacy, accuracy, and completeness of the services, certifications, or approvals performed by such design professionals, provided Owner and Engineer have specified to Contractor all performance and design criteria that such services must satisfy.

D. Pursuant to this paragraph, Engineer's review and approval of design calculations and design drawings will be only for the limited purpose of checking for conformance with performance and design criteria given and the design concept expressed in the Contract Documents. Engineer's review and approval of ShopDrawings and other submittals (except design calculations and design drawings) will be only for the purpose stated in Paragraph 7.16.D.1.

E. Contractor shall not be responsible for the adequacy of the performance or design criteria specified by Owner or Engineer.

ARTICLE 8 – OTHER WORK AT THE SITE

8.01 Other Work

A. In addition to and apart from the Work under the Contract Documents, the Owner may perform other work at or adjacent to the Site. Such other work may be performed by Owner's employees, or through contracts between the Owner and thirdparties. Owner may also arrange to have third-party utility owners perform work on their utilities and facilities at or adjacent to the Site.

B. If Owner performs other work at or adjacent to the Site with Owner's employees, or through contracts for such other work, then Owner shall give Contractor written notice thereof prior to starting any such other work. If Owner has advance information regarding the start of any utility work at or adjacent to the Site, Owner shall provide such information to Contractor.

C. Contractor shall afford each other contractor that performs such other work, each utility owner performing other work, and Owner, if Owner is performing other work with Owner's employees, proper and safe access to the Site, and provide a reasonable opportunity for the introduction and storage of materials and equipment and the execution of such other work. Contractor shall do all cutting, fitting, and patching of the Work that may be required to properly connect or otherwise make its several parts come together and properly integrate with such other work. Contractor shall not endanger any work of others by cutting, excavating, or otherwise altering such work; provided, however, that Contractor may cut or alter others' work with the written consent of Engineer and the others whose work will be affected.

D. If the proper execution or results of any part of Contractor's Work depends upon work performed by others under this Article 8, Contractor shall inspect such other work and promptly report to Engineer in writing any delays, defects, or deficiencies in such other work that render it unavailable or unsuitable for the proper execution and results of Contractor's Work. Contractor's failure to so report will constitute an acceptance of such other work as fit and proper for integration with Contractor's Work except for latent defects and deficiencies in such other work.

Copyright © 2013 National Society of Professional Engineers, American Council of Engineering Companies, and American Society of Civil Engineers. All rights reserved.

8.02 Coordination

A. If Owner intends to contract with others for the performance of other work at or adjacent to the Site, to perform other work at or adjacent to the Site with Owner's employees, or to arrange to have utility owners perform work at or adjacent to the Site, the following will be set forth in the Supplementary Conditions or provided to Contractor prior to the start of any such other work:

1. the identity of the individual or entity that will have authority and responsibility for coordination of the activities among the various contractors;
2. an itemization of the specific matters to be covered by such authority and responsibility; and
3. the extent of such authority and responsibilities.

B. Unless otherwise provided in the Supplementary Conditions, Owner shall have sole authority and responsibility for such coordination.

8.03 Legal Relationships

A. If, in the course of performing other work at or adjacent to the Site for Owner, the Owner's employees, any other contractor working for Owner, or any utility owner causes damage to the Work or to the property of Contractor or its Subcontractors, or delays, disrupts, interferes with, or increases the scope or cost of the performance of the Work, through actions or inaction, then Contractor shall be entitled to an equitable adjustment in the Contract Price or the Contract Times, or both. Contractor must submit any Change Proposal seeking an equitable adjustment in the Contract Price or the Contract Times under this paragraph within 30 days of the damaging, delaying, disrupting, or interfering event. The entitlement to, and extent of, any such equitable adjustment shall take into account information (if any) regarding such otherwork that was provided to Contractor in the Contract Documents prior to the submittal of the Bid or the final negotiation of the terms of the Contract. When applicable, any such equitable adjustment in Contract Price shall be conditioned on Contractor assigning to Owner all Contractor's rights against such other contractor orutility owner with respect to the damage, delay, disruption, or interference that is the subject of the adjustment. Contractor's entitlement to an adjustment of the Contract Times is conditioned on such adjustment being essential to Contractor's ability to complete the Work within the Contract Times.

B. Contractor shall take reasonable and customary measures to avoid damaging, delaying, disrupting, or interfering with the work of Owner, any other contractor, or any utility owner performing other work at or adjacent to the Site. If Contractor fails to take such measures and as a result damages, delays, disrupts, or interferes with the work of any such other contractor or utility owner, then Owner may impose a set-off against payments due to Contractor, and assign to such other contractor or utility owner the Owner's contractual rights against Contractor with respect to the breach of the obligations set forth in this paragraph.

C. When Owner is performing other work at or adjacent to the Site with Owner's employees, Contractor shall be liable to Owner for damage to such other work, and for the reasonable direct delay, disruption, and interference costs incurred by Owner as a result of Contractor's failure to take reasonable and customary measures with

Copyright © 2013 National Society of Professional Engineers, American Council of Engineering Companies, and American Society of Civil Engineers. All rights reserved.

respect to Owner's other work. In response to such damage, delay, disruption, or interference, Owner may impose a set-off against payments due to Contractor.

D. If Contractor damages, delays, disrupts, or interferes with the work of any other contractor, or any utility owner performing other work at or adjacent to the Site, through Contractor's failure to take reasonable and customary measures to avoid such impacts, or if any claim arising out of Contractor's actions, inactions, or negligence in performance of the Work at or adjacent to the Site is made by any suchother contractor or utility owner against Contractor, Owner, or Engineer, then Contractor shall (1) promptly attempt to settle the claim as to all parties through negotiations with such other contractor or utility owner, or otherwise resolve the claim by arbitration or other dispute resolution proceeding or at law, and (2) indemnify and hold harmless Owner and Engineer, and the officers, directors, members, partners, employees, agents, consultants and subcontractors of each and any of them from and against any such claims, and against all costs, losses, and damages (including but not limited to all fees and charges of engineers, architects, attorneys, and other professionals and all court or arbitration or other dispute resolution costs) arising out of or relating to such damage, delay, disruption, or interference.

ARTICLE 9 – OWNER'S RESPONSIBILITIES

9.01 Communications to Contractor

A. Except as otherwise provided in these General Conditions, Owner shall issue all communications to Contractor through Engineer.

9.02 Replacement of Engineer

A. Owner may at its discretion appoint an engineer to replace Engineer, provided Contractor makes no reasonable objection to the replacement engineer. The replacement engineer's status under the Contract Documents shall be that of the former Engineer.

9.03 Furnish Data

A. Owner shall promptly furnish the data required of Owner under the Contract Documents.

9.04 Pay When Due

A. Owner shall make payments to Contractor when they are due as provided in the Agreement.

9.05 Lands and Easements; Reports, Tests, and Drawings

A. Owner's duties with respect to providing lands and easements are set forth in Paragraph 5.01.

B. Owner's duties with respect to providing engineering surveys to establish reference points are set forth in Paragraph 4.03.

C. Article 5 refers to Owner's identifying and making available to Contractor copies of reports of explorations and tests of conditions at the Site, and drawings of physical conditions relating to existing surface or subsurface structures at the Site.

Copyright © 2013 National Society of Professional Engineers, American Council of Engineering Companies, and American Society of Civil Engineers. All rights reserved.

9.06 Insurance

A. Owner's responsibilities, if any, with respect to purchasing and maintaining liability and property insurance are set forth in Article 6.

9.07 Change Orders

A. Owner's responsibilities with respect to Change Orders are set forth in Article 11.

9.08 Inspections, Tests, and Approvals

A. Owner's responsibility with respect to certain inspections, tests, and approvals is set forth in Paragraph 14.02.B.

9.09 Limitations on Owner's Responsibilities

A. The Owner shall not supervise, direct, or have control or authority over, nor be responsible for, Contractor's means, methods, techniques, sequences, or procedures of construction, or the safety precautions and programs incident thereto, or for any failure of Contractor to comply with Laws and Regulations applicable to the performance of the Work. Owner will not be responsible for Contractor's failure to perform the Work in accordance with the Contract Documents.

9.10 Undisclosed Hazardous Environmental Condition

A. Owner's responsibility in respect to an undisclosed Hazardous Environmental Condition is set forth in Paragraph 5.06.

9.11 Evidence of Financial Arrangements

A. Upon request of Contractor, Owner shall furnish Contractor reasonable evidence that financial arrangements have been made to satisfy Owner's obligations under the Contract Documents (including obligations under proposed changes in the Work).

9.12 Safety Programs

A. While at the Site, Owner's employees and representatives shall comply with the specific applicable requirements of Contractor's safety programs of which Owner has been informed.

B. Owner shall furnish copies of any applicable Owner safety programs to Contractor.

ARTICLE 10 – ENGINEER'S STATUS DURING CONSTRUCTION

10.01 Owner's Representative

A. Engineer will be Owner's representative during the construction period. The duties and responsibilities and the limitations of authority of Engineer as Owner's representative during construction are set forth in the Contract.

10.02 Visits to Site

A. Engineer will make visits to the Site at intervals appropriate to the various stages of construction as Engineer deems necessary in order to observe as an experienced and qualified design professional the progress that has been made and the quality of the various aspects of Contractor's executed Work. Based on information obtained during such visits and observations, Engineer, for the benefit of Owner, will determine, in general, if the Work is proceeding in accordance with the Contract Documents. Engineer will not be required to make exhaustive or continuous

Copyright © 2013 National Society of Professional Engineers, American Council of Engineering Companies, and American Society of Civil Engineers. All rights reserved.

inspections on the Site to check the quality or quantity of the Work. Engineer's efforts will be directed toward providing for Owner a greater degree of confidence that the completed Work will conform generally to the Contract Documents. On the basis of such visits and observations, Engineer will keep Owner informed of the progress of the Work and will endeavor to guard Owner against defective Work.

B. Engineer's visits and observations are subject to all the limitations on Engineer's authority and responsibility set forth in Paragraph 10.08. Particularly, but without limitation, during or as a result of Engineer's visits or observations of Contractor's Work, Engineer will not supervise, direct, control, or have authority over or be responsible for Contractor's means, methods, techniques, sequences, or procedures of construction, or the safety precautions and programs incident thereto, or for any failure of Contractor to comply with Laws and Regulations applicable to the performance of the Work.

10.03 Project Representative

A. If Owner and Engineer have agreed that Engineer will furnish a Resident Project Representative to represent Engineer at the Site and assist Engineer in observing the progress and quality of the Work, then the authority and responsibilities of any such Resident Project Representative will be as provided in the Supplementary Conditions, and limitations on the responsibilities thereof will be as provided in Paragraph 10.08. If Owner designates another representative or agent to represent Owner at the Site who is not Engineer's consultant, agent, or employee, the responsibilities and authority and limitations thereon of such other individual orentity will be as provided in the Supplementary Conditions.

10.04 Rejecting Defective Work

A. Engineer has the authority to reject Work in accordance with Article 14.

10.05 Shop Drawings, Change Orders and Payments

A. Engineer's authority, and limitations thereof, as to Shop Drawings and Samples, are set forth in Paragraph 7.16.

B. Engineer's authority, and limitations thereof, as to design calculations and design drawings submitted in response to a delegation of professional design services, if any, are set forth in Paragraph 7.19.

C. Engineer's authority as to Change Orders is set forth in Article 11.

D. Engineer's authority as to Applications for Payment is set forth in Article 15.

10.06 Determinations for Unit Price Work

A. Engineer will determine the actual quantities and classifications of Unit Price Work performed by Contractor as set forth in Paragraph 13.03.

10.07 Decisions on Requirements of Contract Documents and Acceptability of Work

A. Engineer will render decisions regarding the requirements of the Contract Documents, and judge the acceptability of the Work, pursuant to the specific procedures set forth herein for initial interpretations, Change Proposals, and acceptance of the Work. In rendering such decisions and judgments, Engineer will not show partiality to Owner or Contractor, and will not be liable to Owner,

Copyright © 2013 National Society of Professional Engineers, American Council of Engineering Companies, and American Society of Civil Engineers. All rights reserved.

Contractor, or others in connection with any proceedings, interpretations, decisions, or judgments conducted or rendered in good faith.

10.08 Limitations on Engineer's Authority and Responsibilities

A. Neither Engineer's authority or responsibility under this Article 10 or under any other provision of the Contract, nor any decision made by Engineer in good faith either to exercise or not exercise such authority or responsibility or the undertaking, exercise, or performance of any authority or responsibility by Engineer, shall create, impose, or give rise to any duty in contract, tort, or otherwise owed by Engineer to Contractor, any Subcontractor, any Supplier, any other individual or entity, or to any surety for or employee or agent of any of them.

B. Engineer will not supervise, direct, control, or have authority over or be responsible for Contractor's means, methods, techniques, sequences, or procedures of construction, or the safety precautions and programs incident thereto, or for any failure of Contractor to comply with Laws and Regulations applicable to the performance of the Work. Engineer will not be responsible for Contractor's failure toperform the Work in accordance with the Contract Documents.

C. Engineer will not be responsible for the acts or omissions of Contractor or of any Subcontractor, any Supplier, or of any other individual or entity performing any of the Work.

D. Engineer's review of the final Application for Payment and accompanying documentation and all maintenance and operating instructions, schedules, guarantees, bonds, certificates of inspection, tests and approvals, and other documentation required to be delivered by Paragraph 15.06.A will only be to determine generally that their content complies with the requirements of, and in the case of certificates of inspections, tests, and approvals, that the results certifiedindicate compliance with the Contract Documents.

E. The limitations upon authority and responsibility set forth in this Paragraph 10.08 shall also apply to the Resident Project Representative, if any.

10.09 Compliance with Safety Program

A. While at the Site, Engineer's employees and representatives will comply with the specific applicable requirements of Owner's and Contractor's safety programs (if any) of which Engineer has been informed.

ARTICLE 11 – AMENDING THE CONTRACT DOCUMENTS; CHANGES IN THE WORK

11.01 Amending and Supplementing Contract Documents

A. The Contract Documents may be amended or supplemented by a Change Order, a Work Change Directive, or a Field Order.

1. *Change Orders*:

a. If an amendment or supplement to the Contract Documents includes achange in the Contract Price or the Contract Times, such amendment or supplement must be set forth in a Change Order. A Change Order also may

Copyright © 2013 National Society of Professional Engineers, American Council of Engineering Companies, and American Society of Civil Engineers. All rights reserved.

be used to establish amendments and supplements of the Contract Documents that do not affect the Contract Price or Contract Times.

b. Owner and Contractor may amend those terms and conditions of the Contract Documents that do not involve (1) the performance or acceptability of the Work, (2) the design (as set forth in the Drawings, Specifications, or otherwise), or (3) other engineering or technical matters, without the recommendation of the Engineer. Such an amendment shall be set forth in a Change Order.

2. *Work Change Directives*: A Work Change Directive will not change the Contract Price or the Contract Times but is evidence that the parties expect that the modification ordered or documented by a Work Change Directive will be incorporated in a subsequently issued Change Order, following negotiations by the parties as to the Work Change Directive's effect, if any, onthe Contract Price and Contract Times; or, if negotiations are unsuccessful, by a determination under the terms of the Contract Documents governing adjustments, expressly including Paragraph 11.04 regarding change of Contract Price. Contractor must submit any Change Proposal seeking an adjustment of the Contract Price or the Contract Times, or both, no later than 30 days after the completion of the Work set out in the Work Change Directive. Owner must submit any Claim seeking an adjustment of the Contract Price or the Contract Times, or both, no later than 60 days after issuance of the Work Change Directive.

3. *Field Orders*: Engineer may authorize minor changes in the Work if thechanges do not involve an adjustment in the Contract Price or the Contract Times and are compatible with the design concept of the completed Project as a functioning whole as indicated by the Contract Documents. Such changes will be accomplished by a Field Order and will be binding on Owner and also on Contractor, which shall perform the Work involved promptly. If Contractor believes that a Field Order justifies an adjustment in the Contract Price or Contract Times, or both, then before proceeding with the Work at issue, Contractor shall submit a Change Proposal as provided herein.

11.02 Owner-Authorized Changes in the Work

A. Without invalidating the Contract and without notice to any surety, Owner may, at any time or from time to time, order additions, deletions, or revisions in the Work. Such changes shall be supported by Engineer's recommendation, to the extent the change involves the design (as set forth in the Drawings, Specifications, or otherwise), or other engineering or technical matters. Such changes may be accomplished by a Change Order, if Owner and Contractor have agreed as to the effect, if any, of the changes on Contract Times or Contract Price; or by a Work Change Directive. Upon receipt of any such document, Contractor shall promptly proceed with the Work involved; or, in the case of a deletion in the Work, promptly cease construction activities with respect to such deleted Work. Added or revised Work shall be performed under the applicable conditions of the Contract Documents. Nothing in this paragraph shall obligate Contractor to undertake work that Contractor reasonably concludes cannot be performed in a manner consistent with Contractor's safety obligations under the Contract Documents or Laws and Regulations.

Copyright © 2013 National Society of Professional Engineers, American Council of Engineering Companies, and American Society of Civil Engineers. All rights reserved.

11.03 Unauthorized Changes in the Work

A. Contractor shall not be entitled to an increase in the Contract Price or an extension of the Contract Times with respect to any work performed that is not required by the Contract Documents, as amended, modified, or supplemented, except in the case of an emergency as provided in Paragraph 7.15 or in the case of uncovering Work as provided in Paragraph 14.05.

11.04 Change of Contract Price

A. The Contract Price may only be changed by a Change Order. Any Change Proposal for an adjustment in the Contract Price shall comply with the provisions of Paragraph 11.06. Any Claim for an adjustment of Contract Price shall comply with the provisions of Article 12.

B. An adjustment in the Contract Price will be determined as follows:

1. where the Work involved is covered by unit prices contained in the Contract Documents, then by application of such unit prices to the quantities of the items involved (subject to the provisions of Paragraph 13.03); or

2. where the Work involved is not covered by unit prices contained in theContract Documents, then by a mutually agreed lump sum (which may include an allowance for overhead and profit not necessarily in accordance with Paragraph 11.04.C.2); or

3. where the Work involved is not covered by unit prices contained in theContract Documents and the parties do not reach mutual agreement to a lump sum, then on the basis of the Cost of the Work (determined as provided in Paragraph 13.01) plus a Contractor's fee for overhead and profit (determined as provided in Paragraph 11.04.C).

C. *Contractor's Fee*: When applicable, the Contractor's fee for overhead and profit shall be determined as follows:

1. a mutually acceptable fixed fee; or

2. if a fixed fee is not agreed upon, then a fee based on the following percentages of the various portions of the Cost of the Work:

a. for costs incurred under Paragraphs 13.01.B.1 and 13.01.B.2, the Contractor's fee shall be 15 percent;

b. for costs incurred under Paragraph 13.01.B.3, the Contractor's fee shall be five percent;

c. where one or more tiers of subcontracts are on the basis of Cost of the Work plus a fee and no fixed fee is agreed upon, the intent of Paragraphs 11.01.C.2.a and 11.01.C.2.b is that the Contractor's fee shall be based on: (1) a fee of 15 percent of the costs incurred under Paragraphs 13.01.A.1 and 13.01.A.2 by the Subcontractor that actually performs the Work, at whatever tier, and (2) with respect to Contractor itself and to any Subcontractors of a tier higher than that of the Subcontractor that actually performs the Work, a fee of five percent of the amount (fee plus underlying costs incurred) attributable to the next lower tier Subcontractor; provided, however, that for any such subcontracted work the maximum total fee to be

Copyright © 2013 National Society of Professional Engineers, American Council of Engineering Companies, and American Society of Civil Engineers. All rights reserved.

paid by Owner shall be no greater than 27 percent of the costs incurred by the Subcontractor that actually performs the work;

d. no fee shall be payable on the basis of costs itemized under Paragraphs 13.01.B.4, 13.01.B.5, and 13.01.C;

e. the amount of credit to be allowed by Contractor to Owner for any change which results in a net decrease in cost will be the amount of the actual net decrease in cost plus a deduction in Contractor's fee by an amount equal to five percent of such net decrease; and

f. when both additions and credits are involved in any one change, the adjustment in Contractor's fee shall be computed on the basis of the net change in accordance with Paragraphs 11.04.C.2.a through 11.04.C.2.e, inclusive.

11.05 Change of Contract Times

A. The Contract Times may only be changed by a Change Order. Any Change Proposal for an adjustment in the Contract Times shall comply with the provisions of Paragraph 11.06. Any Claim for an adjustment in the Contract Times shall comply with the provisions of Article 12.

B. An adjustment of the Contract Times shall be subject to the limitations set forth in Paragraph 4.05, concerning delays in Contractor's progress.

11.06 Change Proposals

A. Contractor shall submit a Change Proposal to Engineer to request an adjustment in the Contract Times or Contract Price; appeal an initial decision by Engineer concerning the requirements of the Contract Documents or relating to the acceptability of the Work under the Contract Documents; contest a set-off against payment due; or seek other relief under the Contract. The Change Proposal shall specify any proposed change in Contract Times or Contract Price, or both, or other proposed relief, and explain the reason for the proposed change, with citations to any governing or applicable provisions of the Contract Documents.

1. *Procedures*: Contractor shall submit each Change Proposal to Engineer promptly (but in no event later than 30 days) after the start of the event giving rise thereto, or after such initial decision. The Contractor shall submit supporting data, including the proposed change in Contract Price or Contract Time (if any), to the Engineer and Owner within 15 days after the submittal of the Change Proposal. The supporting data shall be accompanied by a written statement that the supporting data are accurate and complete, and that any requested time or price adjustment is the entire adjustment to which Contractor believes it is entitled as a result of said event. Engineer will advise Owner regarding the Change Proposal, and consider any comments or response from Owner regarding the Change Proposal.

2. *Engineer's Action*: Engineer will review each Change Proposal and, within 30 days after receipt of the Contractor's supporting data, either deny the Change Proposal in whole, approve it in whole, or deny it in part and approve it in part. Such actions shall be in writing, with a copy provided to Owner and Contractor. If Engineer does not take action on the Change Proposal within 30

Copyright © 2013 National Society of Professional Engineers, American Council of Engineering Companies, and American Society of Civil Engineers. All rights reserved.

days, then either Owner or Contractor may at any time thereafter submit a letter to the other party indicating that as a result of Engineer's inaction the Change Proposal is deemed denied, thereby commencing the time for appealof the denial under Article 12.

3. *Binding Decision*: Engineer's decision will be final and binding upon Owner and Contractor, unless Owner or Contractor appeals the decision by filing a Claim under Article 12.

B. *Resolution of Certain Change Proposals*: If the Change Proposal does not involve the design (as set forth in the Drawings, Specifications, or otherwise), the acceptability of the Work, or other engineering or technical matters, then Engineer will notify the parties that the Engineer is unable to resolve the Change Proposal. Forpurposes of further resolution of such a Change Proposal, such notice shall bedeemed a denial, and Contractor may choose to seek resolution under the terms of Article 12.

11.07 Execution of Change Orders

A. Owner and Contractor shall execute appropriate Change Orders covering:

1. changes in the Contract Price or Contract Times which are agreed to by the parties, including any undisputed sum or amount of time for Work actually performed in accordance with a Work Change Directive;

2. changes in Contract Price resulting from an Owner set-off, unless Contractor has duly contested such set-off;

3. changes in the Work which are: (a) ordered by Owner pursuant to Paragraph 11.02, (b) required because of Owner's acceptance of defective Work under Paragraph 14.04 or Owner's correction of defective Work under Paragraph 14.07, or (c) agreed to by the parties, subject to the need for Engineer's recommendation if the change in the Work involves the design (as set forth in the Drawings, Specifications, or otherwise), or other engineering or technical matters; and

4. changes in the Contract Price or Contract Times, or other changes, which embody the substance of any final and binding results under Paragraph 11.06, or Article 12.

B. If Owner or Contractor refuses to execute a Change Order that is required to be executed under the terms of this Paragraph 11.07, it shall be deemed to be of full force and effect, as if fully executed.

11.08 Notification to Surety

A. If the provisions of any bond require notice to be given to a surety of any change affecting the general scope of the Work or the provisions of the Contract Documents (including, but not limited to, Contract Price or Contract Times), the giving of any such notice will be Contractor's responsibility. The amount of each applicable bond will be adjusted to reflect the effect of any such change.

Copyright © 2013 National Society of Professional Engineers, American Council of Engineering Companies, and American Society of Civil Engineers. All rights reserved.

ARTICLE 12 – CLAIMS

12.01 Claims

A. *Claims Process*: The following disputes between Owner and Contractor shall be submitted to the Claims process set forth in this Article:

1. Appeals by Owner or Contractor of Engineer's decisions regarding Change Proposals;

2. Owner demands for adjustments in the Contract Price or Contract Times, or other relief under the Contract Documents; and

3. Disputes that Engineer has been unable to address because they do not involve the design (as set forth in the Drawings, Specifications, or otherwise), the acceptability of the Work, or other engineering or technical matters.

B. *Submittal of Claim*: The party submitting a Claim shall deliver it directly to the other party to the Contract promptly (but in no event later than 30 days) after the start of the event giving rise thereto; in the case of appeals regarding Change Proposals within 30 days of the decision under appeal. The party submitting the Claim shallalso furnish a copy to the Engineer, for its information only. The responsibility to substantiate a Claim shall rest with the party making the Claim. In the case of a Claim by Contractor seeking an increase in the Contract Times or Contract Price, or both, Contractor shall certify that the Claim is made in good faith, that the supporting data are accurate and complete, and that to the best of Contractor's knowledge and belief the amount of time or money requested accurately reflects the full amount to which Contractor is entitled.

C. *Review and Resolution*: The party receiving a Claim shall review it thoroughly, giving full consideration to its merits. The two parties shall seek to resolve the Claimthrough the exchange of information and direct negotiations. The parties may extendthe time for resolving the Claim by mutual agreement. All actions taken on a Claim shall be stated in writing and submitted to the other party, with a copy to Engineer.

D. *Mediation*:

1. At any time after initiation of a Claim, Owner and Contractor may mutually agree to mediation of the underlying dispute. The agreement to mediate shall stay the Claim submittal and response process.

2. If Owner and Contractor agree to mediation, then after 60 days from such agreement, either Owner or Contractor may unilaterally terminate the mediation process, and the Claim submittal and decision process shall resume as of the date of the termination. If the mediation proceeds but is unsuccessful in resolving the dispute, the Claim submittal and decision process shall resumeas of the date of the conclusion of the mediation, as determined by the mediator.

3. Owner and Contractor shall each pay one-half of the mediator's fees and costs.

E. *Partial Approval*: If the party receiving a Claim approves the Claim in part and denies it in part, such action shall be final and binding unless within 30 days of such action the other party invokes the procedure set forth in Article 17 for final resolution of disputes.

Copyright © 2013 National Society of Professional Engineers, American Council of Engineering Companies, and American Society of Civil Engineers. All rights reserved.

F. *Denial of Claim*: If efforts to resolve a Claim are not successful, the party receiving the Claim may deny it by giving written notice of denial to the other party. If the receiving party does not take action on the Claim within 90 days, then either Owner or Contractor may at any time thereafter submit a letter to the other party indicating that as a result of the inaction, the Claim is deemed denied, thereby commencing the time for appeal of the denial. A denial of the Claim shall be final and binding unless within 30 days of the denial the other party invokes the procedure set forth in Article 17 for the final resolution of disputes.

G. *Final and Binding Results*: If the parties reach a mutual agreement regarding a Claim, whether through approval of the Claim, direct negotiations, mediation, or otherwise; or if a Claim is approved in part and denied in part, or denied in full, and such actions become final and binding; then the results of the agreement or action on the Claim shall be incorporated in a Change Order to the extent they affect the Contract, including the Work, the Contract Times, or the Contract Price.

ARTICLE 13 – COST OF THE WORK; ALLOWANCES; UNIT PRICE WORK

13.01 Cost of the Work

A. *Purposes for Determination of Cost of the Work*: The term Cost of the Work means the sum of all costs necessary for the proper performance of the Work at issue, as further defined below. The provisions of this Paragraph 13.01 are used for two distinct purposes:

1. To determine Cost of the Work when Cost of the Work is a component of the Contract Price, under cost-plus-fee, time-and-materials, or other cost-based terms; or

2. To determine the value of a Change Order, Change Proposal, Claim, set-off, or other adjustment in Contract Price. When the value of any such adjustment is determined on the basis of Cost of the Work, Contractor is entitled only to those additional or incremental costs required because of the change in the Work or because of the event giving rise to the adjustment.

B. *Costs Included*: Except as otherwise may be agreed to in writing by Owner, costs included in the Cost of the Work shall be in amounts no higher than those prevailing in the locality of the Project, shall not include any of the costs itemized in Paragraph 13.01.C, and shall include only the following items:

1. Payroll costs for employees in the direct employ of Contractor in the performance of the Work under schedules of job classifications agreed upon by Owner and Contractor. Such employees shall include, without limitation, superintendents, foremen, and other personnel employed full time on the Work. Payroll costs for employees not employed full time on the Work shallbe apportioned on the basis of their time spent on the Work. Payroll costs shall include, but not be limited to, salaries and wages plus the cost of fringe benefits, which shall include social security contributions, unemployment,excise, and payroll taxes, workers' compensation, health and retirement benefits, bonuses, sick leave, and vacation and holiday pay applicable thereto. The expenses of performing Work outside of regular working hours, on

Copyright © 2013 National Society of Professional Engineers, American Council of Engineering Companies, and American Society of Civil Engineers. All rights reserved.

Saturday, Sunday, or legal holidays, shall be included in the above to the extent authorized by Owner.

2. Cost of all materials and equipment furnished and incorporated in the Work, including costs of transportation and storage thereof, and Suppliers' field services required in connection therewith. All cash discounts shall accrue to Contractor unless Owner deposits funds with Contractor with which to make payments, in which case the cash discounts shall accrue to Owner. All trade discounts, rebates, and refunds and returns from sale of surplus materials and equipment shall accrue to Owner, and Contractor shall make provisions so that they may be obtained.

3. Payments made by Contractor to Subcontractors for Work performed by Subcontractors. If required by Owner, Contractor shall obtain competitive bids from subcontractors acceptable to Owner and Contractor and shall deliver such bids to Owner, who will then determine, with the advice of Engineer, which bids, if any, will be acceptable. If any subcontract provides that the Subcontractor is to be paid on the basis of Cost of the Work plus a fee, the Subcontractor's Cost of the Work and fee shall be determined in the same manner as Contractor's Cost of the Work and fee as provided in this Paragraph 13.01.

4. Costs of special consultants (including but not limited to engineers, architects, testing laboratories, surveyors, attorneys, and accountants) employed for services specifically related to the Work.

5. Supplemental costs including the following:

   a. The proportion of necessary transportation, travel, and subsistence expenses of Contractor's employees incurred in discharge of duties connected with the Work.

   b. Cost, including transportation and maintenance, of all materials, supplies, equipment, machinery, appliances, office, and temporary facilities at the Site, and hand tools not owned by the workers, which are consumed in the performance of the Work, and cost, less market value, of such items used but not consumed which remain the property of Contractor.

   c. Rentals of all construction equipment and machinery, and the parts thereof, whether rented from Contractor or others in accordance with rental agreements approved by Owner with the advice of Engineer, and the costs of transportation, loading, unloading, assembly, dismantling, and removal thereof. All such costs shall be in accordance with the terms of said rental agreements. The rental of any such equipment, machinery, or parts shall cease when the use thereof is no longer necessary for the Work.

   d. Sales, consumer, use, and other similar taxes related to the Work, and for which Contractor is liable, as imposed by Laws and Regulations.

   e. Deposits lost for causes other than negligence of Contractor, any Subcontractor, or anyone directly or indirectly employed by any of them or for whose acts any of them may be liable, and royalty payments and fees for permits and licenses.

Copyright © 2013 National Society of Professional Engineers, American Council of Engineering Companies, and American Society of Civil Engineers. All rights reserved.

f. Losses and damages (and related expenses) caused by damage to the Work, not compensated by insurance or otherwise, sustained by Contractor in connection with the performance of the Work (except losses and damages within the deductible amounts of property insurance established in accordance with Paragraph 6.05), provided such losses and damages have resulted from causes other than the negligence of Contractor, any Subcontractor, or anyone directly or indirectly employed by any of them or for whose acts any of them may be liable. Such losses shall include settlements made with the written consent and approval of Owner. No such losses, damages, and expenses shall be included in the Cost of the Work for the purpose of determining Contractor's fee.

g. The cost of utilities, fuel, and sanitary facilities at the Site.

h. Minor expenses such as communication service at the Site, express and courier services, and similar petty cash items in connection with the Work.

i. The costs of premiums for all bonds and insurance that Contractor is required by the Contract Documents to purchase and maintain.

C. *Costs Excluded*: The term Cost of the Work shall not include any of the following items:

1. Payroll costs and other compensation of Contractor's officers, executives, principals (of partnerships and sole proprietorships), general managers, safety managers, engineers, architects, estimators, attorneys, auditors, accountants, purchasing and contracting agents, expediters, timekeepers, clerks, and other personnel employed by Contractor, whether at the Site or in Contractor's principal or branch office for general administration of the Work and not specifically included in the agreed upon schedule of job classifications referred to in Paragraph 13.01.B.1 or specifically covered by Paragraph 13.01.B.4. The payroll costs and other compensation excluded here are to be considered administrative costs covered by the Contractor's fee.

2. Expenses of Contractor's principal and branch offices other than Contractor's office at the Site.

3. Any part of Contractor's capital expenses, including interest on Contractor's capital employed for the Work and charges against Contractor for delinquent payments.

4. Costs due to the negligence of Contractor, any Subcontractor, or anyonedirectly or indirectly employed by any of them or for whose acts any of them may be liable, including but not limited to, the correction of defective Work, disposal of materials or equipment wrongly supplied, and making good any damage to property.

5. Other overhead or general expense costs of any kind and the costs of any item not specifically and expressly included in Paragraph 13.01.B.

D. *Contractor's Fee*: When the Work as a whole is performed on the basis of cost-plus, Contractor's fee shall be determined as set forth in the Agreement. When the value of any Work covered by a Change Order, Change Proposal, Claim, set-off, or other

Copyright © 2013 National Society of Professional Engineers, American Council of Engineering Companies, and American Society of Civil Engineers. All rights reserved.

adjustment in Contract Price is determined on the basis of Cost of the Work, Contractor's fee shall be determined as set forth in Paragraph 11.04.C.

E. *Documentation*: Whenever the Cost of the Work for any purpose is to be determined pursuant to this Article 13, Contractor will establish and maintain records thereof in accordance with generally accepted accounting practices and submit in a form acceptable to Engineer an itemized cost breakdown together with supporting data.

13.02 Allowances

A. It is understood that Contractor has included in the Contract Price all allowances so named in the Contract Documents and shall cause the Work so covered to beperformed for such sums and by such persons or entities as may be acceptable to Owner and Engineer.

B. *Cash Allowances*: Contractor agrees that:

1. the cash allowances include the cost to Contractor (less any applicable trade discounts) of materials and equipment required by the allowances to be delivered at the Site, and all applicable taxes; and

2. Contractor's costs for unloading and handling on the Site, labor, installation, overhead, profit, and other expenses contemplated for the cash allowances have been included in the Contract Price and not in the allowances, and no demand for additional payment on account of any of the foregoing will be valid.

C. *Contingency Allowance*: Contractor agrees that a contingency allowance, if any, is for the sole use of Owner to cover unanticipated costs.

D. Prior to final payment, an appropriate Change Order will be issued as recommended by Engineer to reflect actual amounts due Contractor on account of Work covered by allowances, and the Contract Price shall be correspondingly adjusted.

13.03 Unit Price Work

A. Where the Contract Documents provide that all or part of the Work is to be Unit Price Work, initially the Contract Price will be deemed to include for all Unit Price Work an amount equal to the sum of the unit price for each separately identified item of Unit Price Work times the estimated quantity of each item as indicated in the Agreement.

B. The estimated quantities of items of Unit Price Work are not guaranteed and are solely for the purpose of comparison of Bids and determining an initial Contract Price. Payments to Contractor for Unit Price Work will be based on actual quantities.

C. Each unit price will be deemed to include an amount considered by Contractor to be adequate to cover Contractor's overhead and profit for each separately identified item.

D. Engineer will determine the actual quantities and classifications of Unit Price Work performed by Contractor. Engineer will review with Contractor the Engineer's preliminary determinations on such matters before rendering a written decision thereon (by recommendation of an Application for Payment or otherwise). Engineer's written decision thereon will be final and binding (except as modified by

Copyright © 2013 National Society of Professional Engineers, American Council of Engineering Companies, and American Society of Civil Engineers. All rights reserved.

Engineer to reflect changed factual conditions or more accurate data) upon Owner and Contractor, subject to the provisions of the following paragraph.

E. Within 30 days of Engineer's written decision under the preceding paragraph, Contractor may submit a Change Proposal, or Owner may file a Claim, seeking an adjustment in the Contract Price if:

1. the quantity of any item of Unit Price Work performed by Contractor differs materially and significantly from the estimated quantity of such item indicated in the Agreement;

2. there is no corresponding adjustment with respect to any other item of Work; and

3. Contractor believes that it is entitled to an increase in Contract Price as a result of having incurred additional expense or Owner believes that Owner is entitled to a decrease in Contract Price, and the parties are unable to agree as to the amount of any such increase or decrease.

ARTICLE 14 – TESTS AND INSPECTIONS; CORRECTION, REMOVAL OR ACCEPTANCE OF DEFECTIVE WORK

14.01 Access to Work

A. Owner, Engineer, their consultants and other representatives and personnel of Owner, independent testing laboratories, and authorities having jurisdiction will haveaccess to the Site and the Work at reasonable times for their observation, inspection, and testing. Contractor shall provide them proper and safe conditions for such access and advise them of Contractor's safety procedures and programs so that they may comply therewith as applicable.

14.02 Tests, Inspections, and Approvals

A. Contractor shall give Engineer timely notice of readiness of the Work (or specific parts thereof) for all required inspections and tests, and shall cooperate with inspection and testing personnel to facilitate required inspections and tests.

B. Owner shall retain and pay for the services of an independent inspector, testing laboratory, or other qualified individual or entity to perform all inspections and tests expressly required by the Contract Documents to be furnished and paid for byOwner, except that costs incurred in connection with tests or inspections of covered Work shall be governed by the provisions of Paragraph 14.05.

C. If Laws or Regulations of any public body having jurisdiction require any Work (or part thereof) specifically to be inspected, tested, or approved by an employee or other representative of such public body, Contractor shall assume full responsibility for arranging and obtaining such inspections, tests, or approvals, pay all costs in connection therewith, and furnish Engineer the required certificates of inspection or approval.

D. Contractor shall be responsible for arranging, obtaining, and paying for all inspections and tests required:

1. by the Contract Documents, unless the Contract Documents expressly allocate responsibility for a specific inspection or test to Owner;

Copyright © 2013 National Society of Professional Engineers, American Council of Engineering Companies, and American Society of Civil Engineers. All rights reserved.

2. to attain Owner's and Engineer's acceptance of materials or equipment to be incorporated in the Work;

3. by manufacturers of equipment furnished under the Contract Documents;

4. for testing, adjusting, and balancing of mechanical, electrical, and other equipment to be incorporated into the Work; and

5. for acceptance of materials, mix designs, or equipment submitted for approval prior to Contractor's purchase thereof for incorporation in the Work.

Such inspections and tests shall be performed by independent inspectors, testing laboratories, or other qualified individuals or entities acceptable to Owner and Engineer.

E. If the Contract Documents require the Work (or part thereof) to be approved by Owner, Engineer, or another designated individual or entity, then Contractor shall assume full responsibility for arranging and obtaining such approvals.

F. If any Work (or the work of others) that is to be inspected, tested, or approved is covered by Contractor without written concurrence of Engineer, Contractor shall, if requested by Engineer, uncover such Work for observation. Such uncovering shall be at Contractor's expense unless Contractor had given Engineer timely notice of Contractor's intention to cover the same and Engineer had not acted with reasonable promptness in response to such notice.

14.03 Defective Work

A. *Contractor's Obligation*: It is Contractor's obligation to assure that the Work is not defective.

B. *Engineer's Authority*: Engineer has the authority to determine whether Work is defective, and to reject defective Work.

C. *Notice of Defects*: Prompt notice of all defective Work of which Owner or Engineer has actual knowledge will be given to Contractor.

D. *Correction, or Removal and Replacement*: Promptly after receipt of written notice of defective Work, Contractor shall correct all such defective Work, whether or not fabricated, installed, or completed, or, if Engineer has rejected the defective Work, remove it from the Project and replace it with Work that is not defective.

E. *Preservation of Warranties*: When correcting defective Work, Contractor shall take no action that would void or otherwise impair Owner's special warranty and guarantee, if any, on said Work.

F. *Costs and Damages*: In addition to its correction, removal, and replacement obligations with respect to defective Work, Contractor shall pay all claims, costs, losses, and damages arising out of or relating to defective Work, including but not limited to the cost of the inspection, testing, correction, removal, replacement, or reconstruction of such defective Work, fines levied against Owner by governmental authorities because the Work is defective, and the costs of repair or replacement of work of others resulting from defective Work. Prior to final payment, if Owner and Contractor are unable to agree as to the measure of such claims, costs, losses, and damages resulting from defective Work, then Owner may impose a reasonable set- off against payments due under Article 15.

Copyright © 2013 National Society of Professional Engineers, American Council of Engineering Companies, and American Society of Civil Engineers. All rights reserved.

14.04 Acceptance of Defective Work

A. If, instead of requiring correction or removal and replacement of defective Work, Owner prefers to accept it, Owner may do so (subject, if such acceptance occurs prior to final payment, to Engineer's confirmation that such acceptance is in general accord with the design intent and applicable engineering principles, and will not endanger public safety). Contractor shall pay all claims, costs, losses, and damages attributable to Owner's evaluation of and determination to accept such defective Work (such costs to be approved by Engineer as to reasonableness), and for the diminished value of the Work to the extent not otherwise paid by Contractor. If any such acceptance occurs prior to final payment, the necessary revisions in the Contract Documents with respect to the Work shall be incorporated in a Change Order. If the parties are unable to agree as to the decrease in the Contract Price, reflecting the diminished value of Work so accepted, then Owner may impose a reasonable set-off against payments due under Article 15. If the acceptance of defective Work occurs after final payment, Contractor shall pay an appropriateamount to Owner.

14.05 Uncovering Work

A. Engineer has the authority to require special inspection or testing of the Work, whether or not the Work is fabricated, installed, or completed.

B. If any Work is covered contrary to the written request of Engineer, then Contractor shall, if requested by Engineer, uncover such Work for Engineer's observation, and then replace the covering, all at Contractor's expense.

C. If Engineer considers it necessary or advisable that covered Work be observed by Engineer or inspected or tested by others, then Contractor, at Engineer's request, shall uncover, expose, or otherwise make available for observation, inspection, or testing as Engineer may require, that portion of the Work in question, and provide all necessary labor, material, and equipment.

1. If it is found that the uncovered Work is defective, Contractor shall be responsible for all claims, costs, losses, and damages arising out of or relating to such uncovering, exposure, observation, inspection, and testing, and of satisfactory replacement or reconstruction (including but not limited to all costs of repair or replacement of work of others); and pending Contractor'sfull discharge of this responsibility the Owner shall be entitled to impose a reasonable set-off against payments due under Article 15.

2. If the uncovered Work is not found to be defective, Contractor shall beallowed an increase in the Contract Price or an extension of the Contract Times, or both, directly attributable to such uncovering, exposure, observation, inspection, testing, replacement, and reconstruction. If the parties are unable to agree as to the amount or extent thereof, then Contractor may submit a Change Proposal within 30 days of the determination that the Workis not defective.

14.06 Owner May Stop the Work

A. If the Work is defective, or Contractor fails to supply sufficient skilled workers or suitable materials or equipment, or fails to perform the Work in such a way that the completed Work will conform to the Contract Documents, then Owner may order

Copyright © 2013 National Society of Professional Engineers, American Council of Engineering Companies, and American Society of Civil Engineers. All rights reserved.

Contractor to stop the Work, or any portion thereof, until the cause for such order has been eliminated; however, this right of Owner to stop the Work shall not give rise to any duty on the part of Owner to exercise this right for the benefit of Contractor, any Subcontractor, any Supplier, any other individual or entity, or any surety for, or employee or agent of any of them.

14.07 Owner May Correct Defective Work

A. If Contractor fails within a reasonable time after written notice from Engineer to correct defective Work, or to remove and replace rejected Work as required by Engineer, or if Contractor fails to perform the Work in accordance with the Contract Documents, or if Contractor fails to comply with any other provision of the Contract Documents, then Owner may, after seven days written notice to Contractor, correct or remedy any such deficiency.

B. In exercising the rights and remedies under this Paragraph 14.07, Owner shall proceed expeditiously. In connection with such corrective or remedial action, Owner may exclude Contractor from all or part of the Site, take possession of all or part of the Work and suspend Contractor's services related thereto, and incorporate in the Work all materials and equipment stored at the Site or for which Owner has paid Contractor but which are stored elsewhere. Contractor shall allow Owner, Owner's representatives, agents and employees, Owner's other contractors, and Engineer and Engineer's consultants access to the Site to enable Owner to exercise the rights and remedies under this paragraph.

C. All claims, costs, losses, and damages incurred or sustained by Owner in exercising the rights and remedies under this Paragraph 14.07 will be charged against Contractor as set-offs against payments due under Article 15. Such claims, costs, losses and damages will include but not be limited to all costs of repair, or replacement of work of others destroyed or damaged by correction, removal, or replacement of Contractor's defective Work.

D. Contractor shall not be allowed an extension of the Contract Times because of any delay in the performance of the Work attributable to the exercise by Owner of Owner's rights and remedies under this Paragraph 14.07.

ARTICLE 15 – PAYMENTS TO CONTRACTOR; SET-OFFS; COMPLETION; CORRECTION PERIOD

15.01 Progress Payments

A. *Basis for Progress Payments*: The Schedule of Values established as provided in Article 2 will serve as the basis for progress payments and will be incorporated into a form of Application for Payment acceptable to Engineer. Progress payments on account of Unit Price Work will be based on the number of units completed during the pay period, as determined under the provisions of Paragraph 13.03. Progress payments for cost-based Work will be based on Cost of the Work completed by Contractor during the pay period.

B. *Applications for Payments*:

1. At least 20 days before the date established in the Agreement for each progress payment (but not more often than once a month), Contractor shall

Copyright © 2013 National Society of Professional Engineers, American Council of Engineering Companies, and American Society of Civil Engineers. All rights reserved.

submit to Engineer for review an Application for Payment filled out andsigned by Contractor covering the Work completed as of the date of the Application and accompanied by such supporting documentation as is required by the Contract Documents. If payment is requested on the basis of materials and equipment not incorporated in the Work but delivered andsuitably stored at the Site or at another location agreed to in writing, the Application for Payment shall also be accompanied by a bill of sale, invoice,or other documentation warranting that Owner has received the materials and equipment free and clear of all Liens, and evidence that the materials and equipment are covered by appropriate property insurance, a warehouse bond, or other arrangements to protect Owner's interest therein, all of which must besatisfactory to Owner.

2. Beginning with the second Application for Payment, each Application shall include an affidavit of Contractor stating that all previous progress payments received on account of the Work have been applied on account to discharge Contractor's legitimate obligations associated with prior Applications for Payment.

3. The amount of retainage with respect to progress payments will be as stipulated in the Agreement.

C. *Review of Applications*:

1. Engineer will, within 10 days after receipt of each Application for Payment, including each resubmittal, either indicate in writing a recommendation of payment and present the Application to Owner, or return the Application to Contractor indicating in writing Engineer's reasons for refusing to recommend payment. In the latter case, Contractor may make the necessary corrections and resubmit the Application.

2. Engineer's recommendation of any payment requested in an Application for Payment will constitute a representation by Engineer to Owner, based on Engineer's observations of the executed Work as an experienced and qualified design professional, and on Engineer's review of the Application for Payment and the accompanying data and schedules, that to the best of Engineer's knowledge, information and belief:

   a. the Work has progressed to the point indicated;

   b. the quality of the Work is generally in accordance with the Contract Documents (subject to an evaluation of the Work as a functioning whole prior to or upon Substantial Completion, the results of any subsequent tests called for in the Contract Documents, a final determination of quantities and classifications for Unit Price Work under Paragraph 13.03, and any other qualifications stated in the recommendation); and

   c. the conditions precedent to Contractor's being entitled to such payment appear to have been fulfilled in so far as it is Engineer's responsibility to observe the Work.

Copyright © 2013 National Society of Professional Engineers, American Council of Engineering Companies, and American Society of Civil Engineers. All rights reserved.

3. By recommending any such payment Engineer will not thereby be deemed to have represented that:

   a. inspections made to check the quality or the quantity of the Work as it has been performed have been exhaustive, extended to every aspect of the Work in progress, or involved detailed inspections of the Work beyond the responsibilities specifically assigned to Engineer in the Contract; or

   b. there may not be other matters or issues between the parties that might entitle Contractor to be paid additionally by Owner or entitle Owner to withhold payment to Contractor.

4. Neither Engineer's review of Contractor's Work for the purposes of recommending payments nor Engineer's recommendation of any payment, including final payment, will impose responsibility on Engineer:

   a. to supervise, direct, or control the Work, or

   b. for the means, methods, techniques, sequences, or procedures of construction, or the safety precautions and programs incident thereto, or

   c. for Contractor's failure to comply with Laws and Regulations applicable to Contractor's performance of the Work, or

   d. to make any examination to ascertain how or for what purposes Contractor has used the money paid on account of the Contract Price, or

   e. to determine that title to any of the Work, materials, or equipment has passed to Owner free and clear of any Liens.

5. Engineer may refuse to recommend the whole or any part of any payment if, in Engineer's opinion, it would be incorrect to make the representations to Owner stated in Paragraph 15.01.C.2.

6. Engineer will recommend reductions in payment (set-offs) necessary in Engineer's opinion to protect Owner from loss because:

   a. the Work is defective, requiring correction or replacement;

   b. the Contract Price has been reduced by Change Orders;

   c. Owner has been required to correct defective Work in accordance with Paragraph 14.07, or has accepted defective Work pursuant to Paragraph 14.04;

   d. Owner has been required to remove or remediate a Hazardous Environmental Condition for which Contractor is responsible; or

   e. Engineer has actual knowledge of the occurrence of any of the events that would constitute a default by Contractor and therefore justify termination for cause under the Contract Documents.

D. *Payment Becomes Due*:

1. Ten days after presentation of the Application for Payment to Owner with Engineer's recommendation, the amount recommended (subject to any Owner set-offs) will become due, and when due will be paid by Owner to Contractor.

Copyright © 2013 National Society of Professional Engineers, American Council of Engineering Companies, and American Society of Civil Engineers. All rights reserved.

E. *Reductions in Payment by Owner*:

1. In addition to any reductions in payment (set-offs) recommended by Engineer, Owner is entitled to impose a set-off against payment based on any of the following:

   a. claims have been made against Owner on account of Contractor's conduct in the performance or furnishing of the Work, or Owner has incurred costs, losses, or damages on account of Contractor's conduct in the performance or furnishing of the Work, including but not limited to claims, costs, losses, or damages from workplace injuries, adjacent property damage, non-compliance with Laws and Regulations, and patent infringement;

   b. Contractor has failed to take reasonable and customary measures to avoid damage, delay, disruption, and interference with other work at or adjacent to the Site;

   c. Contractor has failed to provide and maintain required bonds or insurance;

   d. Owner has been required to remove or remediate a Hazardous Environmental Condition for which Contractor is responsible;

   e. Owner has incurred extra charges or engineering costs related to submittal reviews, evaluations of proposed substitutes, tests and inspections, or return visits to manufacturing or assembly facilities;

   f. the Work is defective, requiring correction or replacement;

   g. Owner has been required to correct defective Work in accordance with Paragraph 14.07, or has accepted defective Work pursuant to Paragraph 14.04;

   h. the Contract Price has been reduced by Change Orders;

   i. an event that would constitute a default by Contractor and therefore justify a termination for cause has occurred;

   j. liquidated damages have accrued as a result of Contractor's failure to achieve Milestones, Substantial Completion, or final completion of the Work;

   k. Liens have been filed in connection with the Work, except where Contractor has delivered a specific bond satisfactory to Owner to secure the satisfaction and discharge of such Liens;

   l. there are other items entitling Owner to a set off against the amount recommended.

2. If Owner imposes any set-off against payment, whether based on its own knowledge or on the written recommendations of Engineer, Owner will give Contractor immediate written notice (with a copy to Engineer) stating the reasons for such action and the specific amount of the reduction, and promptly pay Contractor any amount remaining after deduction of the amount so withheld. Owner shall promptly pay Contractor the amount so withheld, or any adjustment thereto agreed to by Owner and Contractor, if Contractor remedies the reasons for such action. The reduction imposed shall be binding

Copyright © 2013 National Society of Professional Engineers, American Council of Engineering Companies, and American Society of Civil Engineers. All rights reserved.

on Contractor unless it duly submits a Change Proposal contesting the reduction.

3. Upon a subsequent determination that Owner's refusal of payment was not justified, the amount wrongfully withheld shall be treated as an amount due as determined by Paragraph 15.01.C.1 and subject to interest as provided in the Agreement.

15.02 Contractor's Warranty of Title

A. Contractor warrants and guarantees that title to all Work, materials, and equipment furnished under the Contract will pass to Owner free and clear of (1) all Liens and other title defects, and (2) all patent, licensing, copyright, or royalty obligations, no later than seven days after the time of payment by Owner.

15.03 Substantial Completion

A. When Contractor considers the entire Work ready for its intended use Contractor shall notify Owner and Engineer in writing that the entire Work is substantially complete and request that Engineer issue a certificate of Substantial Completion. Contractor shall at the same time submit to Owner and Engineer an initial draft of punch list items to be completed or corrected before final payment.

B. Promptly after Contractor's notification, Owner, Contractor, and Engineer shall make an inspection of the Work to determine the status of completion. If Engineer does not consider the Work substantially complete, Engineer will notify Contractorin writing giving the reasons therefor.

C. If Engineer considers the Work substantially complete, Engineer will deliver to Owner a preliminary certificate of Substantial Completion which shall fix the date of Substantial Completion. Engineer shall attach to the certificate a punch list of items to be completed or corrected before final payment. Owner shall have seven days after receipt of the preliminary certificate during which to make written objection to Engineer as to any provisions of the certificate or attached punch list. If, after considering the objections to the provisions of the preliminary certificate, Engineer concludes that the Work is not substantially complete, Engineer will, within 14 days after submission of the preliminary certificate to Owner, notify Contractor in writing that the Work is not substantially complete, stating the reasons therefor. If Owner does not object to the provisions of the certificate, or if despite consideration of Owner's objections Engineer concludes that the Work is substantially complete, thenEngineer will, within said 14 days, execute and deliver to Owner and Contractor a final certificate of Substantial Completion (with a revised punch list of items to be completed or corrected) reflecting such changes from the preliminary certificate as Engineer believes justified after consideration of any objections from Owner.

D. At the time of receipt of the preliminary certificate of Substantial Completion,Owner and Contractor will confer regarding Owner's use or occupancy of the Work following Substantial Completion, review the builder's risk insurance policy with respect to the end of the builder's risk coverage, and confirm the transition tocoverage of the Work under a permanent property insurance policy held by Owner. Unless Owner and Contractor agree otherwise in writing, Owner shall bear responsibility for security, operation, protection of the Work, property insurance, maintenance, heat, and utilities upon Owner's use or occupancy of the Work.

Copyright © 2013 National Society of Professional Engineers, American Council of Engineering Companies, and American Society of Civil Engineers. All rights reserved.

E. After Substantial Completion the Contractor shall promptly begin work on the punch list of items to be completed or corrected prior to final payment. In appropriate cases Contractor may submit monthly Applications for Payment for completed punch list items, following the progress payment procedures set forth above.

F. Owner shall have the right to exclude Contractor from the Site after the date of Substantial Completion subject to allowing Contractor reasonable access to remove its property and complete or correct items on the punch list.

15.04 Partial Use or Occupancy

A. Prior to Substantial Completion of all the Work, Owner may use or occupy any substantially completed part of the Work which has specifically been identified in the Contract Documents, or which Owner, Engineer, and Contractor agreeconstitutes a separately functioning and usable part of the Work that can be used by Owner for its intended purpose without significant interference with Contractor's performance of the remainder of the Work, subject to the following conditions:

1. At any time Owner may request in writing that Contractor permit Owner to use or occupy any such part of the Work that Owner believes to be substantially complete. If and when Contractor agrees that such part of the Work is substantially complete, Contractor, Owner, and Engineer will follow the procedures of Paragraph 15.03.A through E for that part of the Work.

2. At any time Contractor may notify Owner and Engineer in writing that Contractor considers any such part of the Work substantially complete and request Engineer to issue a certificate of Substantial Completion for that part of the Work.

3. Within a reasonable time after either such request, Owner, Contractor, and Engineer shall make an inspection of that part of the Work to determine its status of completion. If Engineer does not consider that part of the Work to be substantially complete, Engineer will notify Owner and Contractor in writing giving the reasons therefor. If Engineer considers that part of the Work to be substantially complete, the provisions of Paragraph 15.03 will apply with respect to certification of Substantial Completion of that part of the Work and the division of responsibility in respect thereof and access thereto.

4. No use or occupancy or separate operation of part of the Work may occur prior to compliance with the requirements of Paragraph 6.05 regarding builder's risk or other property insurance.

15.05 Final Inspection

A. Upon written notice from Contractor that the entire Work or an agreed portion thereof is complete, Engineer will promptly make a final inspection with Owner and Contractor and will notify Contractor in writing of all particulars in which this inspection reveals that the Work, or agreed portion thereof, is incomplete or defective. Contractor shall immediately take such measures as are necessary tocomplete such Work or remedy such deficiencies.

Copyright © 2013 National Society of Professional Engineers, American Council of Engineering Companies, and American Society of Civil Engineers. All rights reserved.

15.06 Final Payment

A. *Application for Payment*:

1. After Contractor has, in the opinion of Engineer, satisfactorily completed all corrections identified during the final inspection and has delivered, in accordance with the Contract Documents, all maintenance and operating instructions, schedules, guarantees, bonds, certificates or other evidence of insurance, certificates of inspection, annotated record documents (as provided in Paragraph 7.11), and other documents, Contractor may make application for final payment.

2. The final Application for Payment shall be accompanied (except as previously delivered) by:

   a. all documentation called for in the Contract Documents;

   b. consent of the surety, if any, to final payment;

   c. satisfactory evidence that all title issues have been resolved such that title to all Work, materials, and equipment has passed to Owner free and clear of any Liens or other title defects, or will so pass upon final payment.

   d. a list of all disputes that Contractor believes are unsettled; and

   e. complete and legally effective releases or waivers (satisfactory to Owner) of all Lien rights arising out of the Work, and of Liens filed in connection with the Work.

3. In lieu of the releases or waivers of Liens specified in Paragraph 15.06.A.2 and as approved by Owner, Contractor may furnish receipts or releases in full and an affidavit of Contractor that: (a) the releases and receipts include all labor, services, material, and equipment for which a Lien could be filed; and (b) all payrolls, material and equipment bills, and other indebtedness connected with the Work for which Owner might in any way be responsible, or which might in any way result in liens or other burdens on Owner's property, have been paid or otherwise satisfied. If any Subcontractor or Supplier fails to furnish such a release or receipt in full, Contractor mayfurnish a bond or other collateral satisfactory to Owner to indemnify Owner against any Lien, or Owner at its option may issue joint checks payable to Contractor and specified Subcontractors and Suppliers.

B. *Engineer's Review of Application and Acceptance*:

1. If, on the basis of Engineer's observation of the Work during construction and final inspection, and Engineer's review of the final Application for Payment and accompanying documentation as required by the Contract Documents, Engineer is satisfied that the Work has been completed and Contractor's other obligations under the Contract have been fulfilled, Engineer will, within ten days after receipt of the final Application for Payment, indicate in writing Engineer's recommendation of final payment and present the Application for Payment to Owner for payment. Such recommendation shall account for any set-offs against payment that are necessary in Engineer's opinion to protect Owner from loss for the reasons stated above with respect to progress payments. At the same time Engineer will also give written notice to Owner

Copyright © 2013 National Society of Professional Engineers, American Council of Engineering Companies, and American Society of Civil Engineers. All rights reserved.

and Contractor that the Work is acceptable, subject to the provisions of Paragraph 15.07. Otherwise, Engineer will return the Application for Payment to Contractor, indicating in writing the reasons for refusing to recommend final payment, in which case Contractor shall make the necessary corrections and resubmit the Application for Payment.

C. *Completion of Work*: The Work is complete (subject to surviving obligations) when it is ready for final payment as established by the Engineer's written recommendation of final payment.

D. *Payment Becomes Due*: Thirty days after the presentation to Owner of the final Application for Payment and accompanying documentation, the amountrecommended by Engineer (less any further sum Owner is entitled to set off against Engineer's recommendation, including but not limited to set-offs for liquidated damages and set-offs allowed under the provisions above with respect to progress payments) will become due and shall be paid by Owner to Contractor.

15.07 Waiver of Claims

A. The making of final payment will not constitute a waiver by Owner of claims or rights against Contractor. Owner expressly reserves claims and rights arising from unsettled Liens, from defective Work appearing after final inspection pursuant to Paragraph 15.05, from Contractor's failure to comply with the Contract Documentsor the terms of any special guarantees specified therein, from outstanding Claims by Owner, or from Contractor's continuing obligations under the Contract Documents.

B. The acceptance of final payment by Contractor will constitute a waiver by Contractor of all claims and rights against Owner other than those pending matters that have been duly submitted or appealed under the provisions of Article 17.

15.08 Correction Period

A. If within one year after the date of Substantial Completion (or such longer period of time as may be prescribed by the terms of any applicable special guarantee required by the Contract Documents, or by any specific provision of the Contract Documents), any Work is found to be defective, or if the repair of any damages tothe Site, adjacent areas that Contractor has arranged to use through construction easements or otherwise, and other adjacent areas used by Contractor as permitted by Laws and Regulations, is found to be defective, then Contractor shall promptly, without cost to Owner and in accordance with Owner's written instructions:

1. correct the defective repairs to the Site or such other adjacent areas;
2. correct such defective Work;
3. if the defective Work has been rejected by Owner, remove it from the Project and replace it with Work that is not defective, and
4. satisfactorily correct or repair or remove and replace any damage to other Work, to the work of others, or to other land or areas resulting therefrom.

B. If Contractor does not promptly comply with the terms of Owner's written instructions, or in an emergency where delay would cause serious risk of loss or damage, Owner may have the defective Work corrected or repaired or may have the rejected Work removed and replaced. Contractor shall pay all claims, costs, losses,

Copyright © 2013 National Society of Professional Engineers, American Council of Engineering Companies, and American Society of Civil Engineers. All rights reserved.

and damages (including but not limited to all fees and charges of engineers, architects, attorneys, and other professionals and all court or arbitration or other dispute resolution costs) arising out of or relating to such correction or repair or such removal and replacement (including but not limited to all costs of repair or replacement of work of others).

C. In special circumstances where a particular item of equipment is placed in continuous service before Substantial Completion of all the Work, the correction period for that item may start to run from an earlier date if so provided in the Specifications.

D. Where defective Work (and damage to other Work resulting therefrom) has been corrected or removed and replaced under this paragraph, the correction period hereunder with respect to such Work will be extended for an additional period of one year after such correction or removal and replacement has been satisfactorily completed.

E. Contractor's obligations under this paragraph are in addition to all other obligations and warranties. The provisions of this paragraph shall not be construed as a substitute for, or a waiver of, the provisions of any applicable statute of limitation or repose.

ARTICLE 16 – SUSPENSION OF WORK AND TERMINATION

16.01 Owner May Suspend Work

A. At any time and without cause, Owner may suspend the Work or any portion thereof for a period of not more than 90 consecutive days by written notice to Contractor and Engineer. Such notice will fix the date on which Work will be resumed. Contractor shall resume the Work on the date so fixed. Contractor shall be entitled to an adjustment in the Contract Price or an extension of the Contract Times, or both, directly attributable to any such suspension. Any Change Proposal seeking such adjustments shall be submitted no later than 30 days after the date fixed for resumption of Work.

16.02 Owner May Terminate for Cause

A. The occurrence of any one or more of the following events will constitute a default by Contractor and justify termination for cause:

1. Contractor's persistent failure to perform the Work in accordance with the Contract Documents (including, but not limited to, failure to supply sufficient skilled workers or suitable materials or equipment or failure to adhere to the Progress Schedule);
2. Failure of Contractor to perform or otherwise to comply with a material term of the Contract Documents;
3. Contractor's disregard of Laws or Regulations of any public body having jurisdiction; or
4. Contractor's repeated disregard of the authority of Owner or Engineer.

Copyright © 2013 National Society of Professional Engineers, American Council of Engineering Companies, and American Society of Civil Engineers. All rights reserved.

B. If one or more of the events identified in Paragraph 16.02.A occurs, then after giving Contractor (and any surety) ten days written notice that Owner is considering a declaration that Contractor is in default and termination of the contract, Owner may proceed to:

1. declare Contractor to be in default, and give Contractor (and any surety) notice that the Contract is terminated; and

2. enforce the rights available to Owner under any applicable performance bond.

C. Subject to the terms and operation of any applicable performance bond, if Owner has terminated the Contract for cause, Owner may exclude Contractor from the Site, take possession of the Work, incorporate in the Work all materials and equipment stored at the Site or for which Owner has paid Contractor but which are stored elsewhere, and complete the Work as Owner may deem expedient.

D. Owner may not proceed with termination of the Contract under Paragraph 16.02.B if Contractor within seven days of receipt of notice of intent to terminate begins to correct its failure to perform and proceeds diligently to cure such failure.

E. If Owner proceeds as provided in Paragraph 16.02.B, Contractor shall not be entitled to receive any further payment until the Work is completed. If the unpaid balance of the Contract Price exceeds the cost to complete the Work, including all related claims, costs, losses, and damages (including but not limited to all fees and chargesof engineers, architects, attorneys, and other professionals) sustained by Owner, such excess will be paid to Contractor. If the cost to complete the Work including such related claims, costs, losses, and damages exceeds such unpaid balance, Contractor shall pay the difference to Owner. Such claims, costs, losses, and damages incurred by Owner will be reviewed by Engineer as to their reasonableness and, when so approved by Engineer, incorporated in a Change Order. When exercising any rights or remedies under this paragraph, Owner shall not be required to obtain the lowest price for the Work performed.

F. Where Contractor's services have been so terminated by Owner, the termination will not affect any rights or remedies of Owner against Contractor then existing or which may thereafter accrue, or any rights or remedies of Owner against Contractor or any surety under any payment bond or performance bond. Any retention or payment of money due Contractor by Owner will not release Contractor from liability.

G. If and to the extent that Contractor has provided a performance bond under the provisions of Paragraph 6.01.A, the provisions of that bond shall govern over any inconsistent provisions of Paragraphs 16.02.B and 16.02.D.

16.03 Owner May Terminate For Convenience

A. Upon seven days written notice to Contractor and Engineer, Owner may, without cause and without prejudice to any other right or remedy of Owner, terminate the Contract. In such case, Contractor shall be paid for (without duplication of any items):

1. completed and acceptable Work executed in accordance with the Contract Documents prior to the effective date of termination, including fair and reasonable sums for overhead and profit on such Work;

Copyright © 2013 National Society of Professional Engineers, American Council of Engineering Companies, and American Society of Civil Engineers. All rights reserved.

2. expenses sustained prior to the effective date of termination in performing services and furnishing labor, materials, or equipment as required by the Contract Documents in connection with uncompleted Work, plus fair and reasonable sums for overhead and profit on such expenses; and

3. other reasonable expenses directly attributable to termination, including costs incurred to prepare a termination for convenience cost proposal.

B. Contractor shall not be paid on account of loss of anticipated overhead, profits, or revenue, or other economic loss arising out of or resulting from such termination.

16.04 Contractor May Stop Work or Terminate

A. If, through no act or fault of Contractor, (1) the Work is suspended for more than 90 consecutive days by Owner or under an order of court or other public authority, or (1) Engineer fails to act on any Application for Payment within 30 days after it is submitted, or (3) Owner fails for 30 days to pay Contractor any sum finally determined to be due, then Contractor may, upon seven days written notice to Ownerand Engineer, and provided Owner or Engineer do not remedy such suspension or failure within that time, terminate the contract and recover from Owner payment on the same terms as provided in Paragraph 16.03.

B. In lieu of terminating the Contract and without prejudice to any other right orremedy, if Engineer has failed to act on an Application for Payment within 30 days after it is submitted, or Owner has failed for 30 days to pay Contractor any sum finally determined to be due, Contractor may, seven days after written notice to Owner and Engineer, stop the Work until payment is made of all such amounts due Contractor, including interest thereon. The provisions of this paragraph are not intended to preclude Contractor from submitting a Change Proposal for an adjustment in Contract Price or Contract Times or otherwise for expenses or damage directly attributable to Contractor's stopping the Work as permitted by this paragraph.

ARTICLE 17 – FINAL RESOLUTION OF DISPUTES

17.01 Methods and Procedures

A. *Disputes Subject to Final Resolution*: The following disputed matters are subject to final resolution under the provisions of this Article:

1. A timely appeal of an approval in part and denial in part of a Claim, or of a denial in full; and

2. Disputes between Owner and Contractor concerning the Work or obligations under the Contract Documents, and arising after final payment has been made.

B. *Final Resolution of Disputes*: For any dispute subject to resolution under this Article, Owner or Contractor may:

1. elect in writing to invoke the dispute resolution process provided for in the Supplementary Conditions; or

2. agree with the other party to submit the dispute to another dispute resolution process; or

Copyright © 2013 National Society of Professional Engineers, American Council of Engineering Companies, and American Society of Civil Engineers. All rights reserved.

3. if no dispute resolution process is provided for in the Supplementary Conditions or mutually agreed to, give written notice to the other party of the intent to submit the dispute to a court of competent jurisdiction.

ARTICLE 18 – MISCELLANEOUS

18.01 Giving Notice

A. Whenever any provision of the Contract Documents requires the giving of written notice, it will be deemed to have been validly given if:

1. delivered in person, by a commercial courier service or otherwise, to the individual or to a member of the firm or to an officer of the corporation for which it is intended; or

2. delivered at or sent by registered or certified mail, postage prepaid, to the last business address known to the sender of the notice.

18.02 Computation of Times

A. When any period of time is referred to in the Contract by days, it will be computed to exclude the first and include the last day of such period. If the last day of any such period falls on a Saturday or Sunday or on a day made a legal holiday by the law of the applicable jurisdiction, such day will be omitted from the computation.

18.03 Cumulative Remedies

A. The duties and obligations imposed by these General Conditions and the rights and remedies available hereunder to the parties hereto are in addition to, and are not to be construed in any way as a limitation of, any rights and remedies available to any or all of them which are otherwise imposed or available by Laws or Regulations, by special warranty or guarantee, or by other provisions of the Contract. The provisions of this paragraph will be as effective as if repeated specifically in the Contract Documents in connection with each particular duty, obligation, right, and remedy to which they apply.

18.04 Limitation of Damages

A. With respect to any and all Change Proposals, Claims, disputes subject to final resolution, and other matters at issue, neither Owner nor Engineer, nor any of their officers, directors, members, partners, employees, agents, consultants, or subcontractors, shall be liable to Contractor for any claims, costs, losses, or damages sustained by Contractor on or in connection with any other project or anticipated project.

18.05 No Waiver

A. A party's non-enforcement of any provision shall not constitute a waiver of that provision, nor shall it affect the enforceability of that provision or of the remainder of this Contract.

18.06 Survival of Obligations

A. All representations, indemnifications, warranties, and guarantees made in, required by, or given in accordance with the Contract, as well as all continuing obligations indicated in the Contract, will survive final payment, completion, and acceptance of

Copyright © 2013 National Society of Professional Engineers, American Council of Engineering Companies, and American Society of Civil Engineers. All rights reserved.

the Work or termination or completion of the Contract or termination of the services of Contractor.

18.07 Controlling Law

A. This Contract is to be governed by the law of the state in which the Project is located.

18.08 Headings

A. Article and paragraph headings are inserted for convenience only and do not constitute parts of these General Conditions.

Copyright © 2013 National Society of Professional Engineers, American Council of Engineering Companies, and American Society of Civil Engineers. All rights reserved.

These Supplementary Conditions amend or supplement the Standard General Conditions of the Construction Contract, 007200. All provisions that are not amended or supplemented remain in full force and effect.

The terms used in these Supplementary Conditions have the meanings stated in the General Conditions. Additional terms used in the Supplementary Conditions have the meanings stated below, which are applicable to both the singular and plural thereof.

The address system used in these Supplementary Conditions is the same as used in the General Conditions, with the prefix "SC" added thereto.

SC 1.01.A.10.5 Add the following new paragraph immediately following 1.01.A.10:

> SC 1.01.A.10.5 *Complete in Place* – The inclusion of the work, including incidentals, mentioned or implied in the Specifications and on the Drawing, or work that may reasonably be inferred as necessary to the proper execution of the item to ensure a complete working system.

SC 1.01.A.32 Delete paragraph 1.01.A.32 in its entirety and substitute the following:

> SC 1.01.A.32 *Project Representative* – The authorized representative of Engineer assigned to assist Engineer at the Site.

SC 2.02.A Delete paragraph 2.02.A in its entirety and substitute the following:

> SC 2.02.A Owner shall furnish to Contractor one fully executed copy of the Contract Documents. Additional printed copies will be furnished upon request at the cost of reproduction.

SC 4.01.A Delete paragraph 4.01.A in its entirety and substitute the following:

> SC 4.01.A The Contract Times will commence to run on the day indicated in the Notice to Proceed.

SC 4.05.C.2 Delete paragraph 4.05.C.2 in its entirety and substitute the following:

> SC 4.05.C.2 Weather conditions that prevent the Contractor from accomplishing at least 6 hours of scheduled work on a contract work day.

SC 5.06.A Delete paragraph 5.06.A in its entirety and substitute the following:

SC 5.06.A There were no Hazardous Environmental reports used in the preparation of these Construction Documents.

SC 5.06.B Delete paragraph 5.06.B in its entirety:

SC 5.06.B Reliance by Contractor on Technical Data Authorized: Contractor may rely upon the accuracy of the Technical Data expressly identified in the Supplementary Conditions with respect to such reports and drawings, but such reports and drawings are not Contract Documents. If no such express identification has been made, then Contractor may rely on the accuracy of the Technical Data (as defined in Article 1) contained in any geotechnical or environmental report prepared for the Project and made available to Contractor. Except for such reliance on Technical Data, Contractor may not rely upon or make any claim against Owner or Engineer, or any of their officers, directors, members, partners, employees, agents, consultants, or subcontractors with respect to:

1. the completeness of such reports and drawings for Contractor's purposes, including, but not limited to, any aspects of the means, methods, techniques, sequences and procedures of construction to be employed by Contractor and safety precautions and programs incident thereto; or

2. other data, interpretations, opinions and information contained in such reports or shown or indicated in such drawings; or

3. any Contractor interpretation of or conclusion drawn from any Technical Data or any such other data, interpretations, opinions or information.

SC 6.02.B Delete paragraph 6.02.B in its entirety and substitute the following:

SC 6.02.B All insurance required by the Contract to be purchased and maintained by Owner or Contractor shall be obtained from insurance companies that are eligible, in the state or jurisdiction in which the Project is located, to issue insurance policies for the required limits and coverages. Unless a different standard is indicated in the Supplementary Conditions, all companies that provide insurance policies required under this Contract shall have an A.M. Best rating of A-VII or better.

SC 6.03.C.1.c Add the following new paragraph immediately following 6.03.C.1.b:

SC 6.03.C.1.c Contractor shall provide the corresponding Accord form along with an endorsement of additional insured. Contractor shall place the certificate holder as follows:

JACKSON SHAW COMPANY

2700 Post Oak Boulevard, 21st Floor
Houston, Texas 77056

SC 6.03.F Delete paragraph 6.03.F in its entirety:

SC 6.03.F *Contractor's pollution liability insurance*: Contractor shall purchase and maintain a policy covering third-party injury and property damage claims, including clean-up costs, as a result of pollution conditions arising from Contractor's operations and completed operations. This insurance shall be maintained for no less than three years after final completion.

SC 6.03.I.3 Delete paragraph 6.03.I.3 in its entirety and substitute the following:

SC 6.03.I.3 contain a provision or endorsement that the coverage afforded will not be canceled, materially changed, or renewal refused until at least 30 days prior written notice has been given to Contractor, unless for non-payment. Within three days of receipt of any such written notice, Contractor shall provide a copy of the notice to Owner, Engineer, and each other insured under the policy.

SC 6.03.K Add the following new paragraph immediately following 6.03.J:

SC 6.03.K The limits of liability for insurance required by Paragraph 6.03 of the General Conditions shall provide coverage for not less than the following amounts or greater where required by Laws and Regulations. To the fullest extent allowed by applicable Laws and Regulations, Contractor shall name the Indemnified Parties as additional insureds to the same extent as Contractor is required to indemnify the Indemnified Parties pursuant to Section 007200 – General Conditions. Such additional insured coverage shall be to the full extent of the limits of liability on all policies of liability insurance (other than Worker's Compensation and Employers' Liability insurance) maintained in force or procured by Contractor during the Work, and shall cause such insurance to provide, if necessary by endorsement, that each such policy shall respond as primary insurance and shall not contribute with or apply as excess over any other valid and collectible other insurance that may be maintained by Owner or Engineer. In addition, Contractor shall cause the insurance required to provide or be endorsed to provide that such insurance applies separately to each insured against whom claim is made or suit is brought. Additional Insured shall include Owner, its officers, managers, agents, Engineer and employees, and District, where applicable, if different than Owner.

1. Workers' Compensation, and related coverages under Paragraph 6.03.A of the General Conditions:

   Contractor shall carry statutory Worker's Compensation Insurance covering Contractor's employees in compliance with all requirements of the Texas Workers' Compensation Act. Contractor shall also carry Employer's Liability Insurance in an amount not less than the following:

   a. Each Accident $1,000,000
   b. Each Disease Each Employee.....$1,000,000
   c. Disease Policy Limit.....$1,000,000

2. Contractor's General Liability under Paragraphs 6.03.B and 6.03.C of the General Conditions:

   a. General Aggregate $2,000,000
   b. Products-Completed Operations Aggregate $1,000,000
   c. Personal and Advertising Injury $1,000,000
   d. Each Occurrence $1,000,000

3. Automobile Liability (Leased, Owned, Hired, and Non-Owned Vehicles) under Paragraph 6.03.D of the General Conditions:

   a. Combined Single Limit:
      Each Occurrence (Bodily Injury and Property Damage) $1,000,000

4. Excess or Umbrella Liability under Paragraph 6.03.E of the General Conditions:

   a. General Aggregate $2,000,000
   b. Per Occurrence.....$2,000,000

5. Additional Insurance Coverages:

   a. Contractual Liability Insurance – Covering the indemnity provisions of the contract in the same amount and coverage as provided for General Liability Policy, specifically referring to this contract by date, project number, and location.

6. Required Endorsements:

   a. Waiver of Subrogation – In as much as Owner and Contractor intend that all of Contractor's insured loss and liabilities fall upon Contractor's insurers, without recourse against the Indemnified Parties, Contractor agrees to cause all of its policies of insurance to be maintained in force or procured by Contractor during the Work to provide, if necessary by endorsement, that each such insurer fully waives subrogation against Owner and Engineer. The insurance as to which subrogation waiver is required includes, but is not limited to, that required by SC6.03.K.1 through SC6.03.K.4 and SC6.05.A. Contractor hereby waives and releases all Claims it may have against the Indemnified Parties to the extent any of such Claims are covered by insurance required to be furnished by Contractor or any Subcontractors hereunder, whether or not Contractor actually obtains such insurance, and EVEN IF SUCH CLAIMS ARISE OUT OF, RELATE TO OR ARE BASED UPON THE NEGLIGENCE, BREACH OF CONTRACT, BREACH OR VIOLATION OF A STATUTE, ORDINANCE, GOVERNMENTAL REGULATION, STANDARD, OR RULE, OR OTHER FAULT, HOWEVER CHARACTERIZED, OR STRICT LIABILITY WITHOUT REGARD TO FAULT, OF AN INDEMNIFIED PARTY.

SC 6.05.AB Add the following new paragraph immediately following 6.05.A.13:

SC 6.05.AB *Installation Floater*: If builder's risk insurance is not generally available in the insurance marketplace for the Work, the Contractor shall obtain an installation floater insurance policy acceptable to Owner, or other acceptable equivalent policy. The Installation Floater shall be in the amount of all installed, fabricated, or erected property being incorporated into the Work under the Contract. Such policy shall cover all risks of physical loss or damage, including flood and earthquake, to the Work. Such coverage shall be maintained in effect, subject to the provisions herein regarding Substantial Completion and partial occupancy or use of the Work by Owner, until the Work is complete. The installation floater or equivalent policy shall name the Owner, Contractor, and any individuals or entities required by the Supplementary Conditions to be insured under such installation floater, as insureds.

SC 6.05.AC Add the following new paragraph immediately following 6.05.AB:

SC 6.05.AC *Contract with No Property*: Neither builder's risk insurance nor an installation floater is required under the Contract when the Engineer determines the Work does NOT involve installation, fabrication, or erection of any property, including but not limited to any fixtures, materials, or equipment, which could be covered under such policies. The risk of loss, however, still remains with the Contractor pursuant to the Contract Documents.

SC 7.02.B Delete paragraph 7.02.B in its entirety and substitute the following:

SC 7.02.B Except as otherwise required for the safety or protection of persons or the Work or property at the Site or adjacent thereto, and except as otherwise stated in the Contract Documents, all Work at the Site shall be performed during regular working hours (7:00 AM to 6:00 PM), Monday through Friday. Contractor will not perform Work on a Saturday, Sunday, or any holiday(as defined below). Contractor may perform Work outside regular working hours or on Saturday, Sunday, or legal holidays only with Owner's written consent.

SC 7.02.C Add the following new paragraph immediately following 7.02.B:

SC 7.02.C Legal holidays are defined as, News Years Day, Good Friday, Memorial Day, Independence Day, Labor Day, Thanksgiving, Friday immediately following Thanksgiving, and Christmas Day.

SC 7.02.D Add the following new paragraph immediately following 7.02.C:

SC 7.02.D Provide 48 hours' notice for requesting to work on Saturdays, Sundays and/or Holidays and must include the following:

1. Hours to be worked.
2. Type of work to be performed.

SC 7.02.E Add the following new paragraph immediately following 7.02.D:SC

7.02.E Contractor agrees to:

1. Reimburse Owner (when requested) for any additional costs that Owner incurs, including but not limited to the following:

    a. Charges for the testing laboratory.

    b. $600.00 per day for Engineer's Project Representative.

    c. Charges for the Operator.

2. Not perform work that might be considered a nuisance to the general public including but not limited to the following:

    a. Work that generates excessive noise.

    b. Work that would create dust.

    c. Work that would create objectionable odors.

SC 7.03.B Add the following language at the end of the last sentence of paragraph 7.03.B:

Verify all measurements of existing or new work prior to ordering any materials. Any differences from those shown should be reported to the Engineer prior to ordering any material which may be affected.

SC 7.08.B Add the following new paragraph immediately following 7.08.A:SC

7.08.B The following permit(s) will be furnished by the Owner:

- None

SC 7.10.D Add the following new paragraph immediately following 7.10.C:

SC 7.10.D Contractor, in conjunction with the execution of this (contract/agreement) and in accordance with Chapter 2271 of the Texas Government Code, does hereby agree, confirm, and verify that it does not Boycott Israel, as defined in Chapter 808 of Subtitle A, Title 8 of the Texas Government Code, and will not Boycott Israel during the term of the contract/agreement. Contractor hereby acknowledges and agrees that this verification is a material term of the contract/agreement and Owner is expressly relying on this verification in agreeing to enter into the contract/agreement with Contractor. TO THE MAXIMUM EXTENT PERMITTED BY LAW, CONTRACTOR AGREES TO INDEMNIFY, DEFEND AND HOLD HARMLESS OWNER FROM ALL CLAIMS, CAUSES OF ACTION, LEGAL PROCEEDINGS, DAMAGES, COSTS, FEES AND EXPENSES ARISING OUT OF OR RELATED TO AN ACTUAL OR ALLEGED MISREPRESENTATION BY CONTRACTOR PROVIDED HEREUNDER.

SC 7.10.E Add the following new paragraph immediately following 7.10.D:

SC 7.10.E Pursuant to Section 2252.152 of the Texas Government Code, Contractor hereby verifies that it is not engaged in active business operations with Sudan, Iran, or a foreign terrorist organization. For purposes of this Contract/Agreement, the phrase “foreign terrorist organization” means an organization designated as a foreign terrorist organization by the United States Secretary of State as authorized by 8 U.S.C. Section 1189.

SC 7.10.F Add the following new paragraphs immediately following 7.10.E:

SC 7.10.F The requirements of Subchapter J, Chapter 552, Government Code, may apply to this bid and Contract and Contractor agrees that the Contract can be terminated if Contractor knowingly or intentionally fails to comply with a requirement of that subchapter.

Contractor declares that it has not received from a governmental body a notice of noncompliance with a provision of Subchapter J, Chapter 552, Texas Government Code, or, if such a notice has been received, that Contractor has taken adequate steps to ensure future compliance with such subchapter and has provided or upon request will provide documentation of same.

SC 7.11.B Add the following new paragraph immediately following 7.11.A:

SC 7.11.B Contractor shall maintain a list of names, addresses, fax numbers, e-mail addresses, web site locations, and telephone numbers of all Contractors, Subcontractors, and major Suppliers of materials and equipment.

SC 7.11.C Add the following new paragraph immediately following 7.11.B:

SC 7.11.C Contractor shall maintain records for use in preparing Project documentation.

SC 7.17.E Add the following new paragraph immediately following 7.17.D:

SC 7.17.E Contractor's guarantee and warranty shall extend for a period of one (1) year from the date the Certificate of Substantial Completion is issued. Work found to be imperfect or defective shall be replaced or repaired without cost to the Owner during this period. Failure of the Contractor to promptly correct the defect(s) entitles the Owner to repair or replace the same and to recover all costs from the Contractor or the Contractor's surety.

SC 9.13 Add the following new paragraph immediately following 9.12:SC

9.13 Contractor Resources

A. Owner must furnish water and electrical used by the Contractor as long as Contractor takes all precautions to eliminate wasteful usage and to conserve. When water is obtained from an unmetered source (i.e. fire hydrant) Contractor must meter water using a meter obtained from the Owner.

SC 10.04.A Delete paragraph 10.04.A in its entirety and substitute the following:

SC 10.04.A Engineer has the authority to recommend to the Owner that they reject the defective work in accordance with Article 14.

SC 14.03.B Delete paragraph 14.03.B in its entirety and substitute the following:

SC 14.03.B *Engineer's Authority*: Engineer has the authority to determine whether Work is defective, and to recommend to the Owner that they reject defective work.

SC 14.03.D Delete paragraph 14.03.D in its entirety and substitute the following:

SC 14.03.D *Correction, or Removal and Replacement*: Promptly after receipt of written notice of defective Work, Contractor shall correct all such defective work, whether or not fabricated, installed, or completed, or, if Owner has rejected the defective work, remove it from the project and replace it with Work that is not defective.

SC 15.01.D.1 Delete paragraph 15.01.D.1 in its entirety and substitute the following:

SC 15.01.D.1 *Payment Becomes Due*: Forty-five days after presentation of the Application for Payment to Owner with Engineer's recommendation, the amount recommended (subject to any Owner set-offs) will become due, and when due will be paid by Owner to Contractor.

SC 15.06.A.1 Delete paragraph 15.06.A.1 in its entirety and substitute the following:

SC 15.06.A.1 After Contractor has, in the opinion of Engineer, satisfactorily completed all corrections identified during the final inspection and has delivered, in accordance with the Contract Documents, all maintenance and operating instructions, schedules, guarantees, bonds, certificates or other evidence of insurance, certificates of inspection, annotated record documents (as provided in Paragraph 7.11), and other documents, including a letter guaranteeing the work for a period of one (1) year from the date the Certificate of Substantial Completion is issued, Contractor may make application for final payment.

SC 15.06.C Delete paragraph 15.06.C in its entirety and substitute the following:

SC 15.06.C *Completion of Work*: The Work is complete on issuance of the Certificate of Final Completion (subject to surviving obligations) and ready for final payment as established by the Engineer's written recommendation of final payment.

SC 15.06.D Delete paragraph 15.06.D in its entirety and substitute the following:

SC 15.06.D *Payment Becomes Due:* Forty-five days after the presentation to Owner of the final Application for Payment and accompanying documentation, the amount recommended by Engineer (less any further sum Owner is entitled to set off against Engineer's recommendation, including but not limited to set-offs for liquidated damages and set-offs allowed under the provisions above with respect to progress payments) will become due and shall be paid by Owner to Contractor.

SC 16.03 Delete 16.03 in its entirety and substitute the following:

SC 16.03 *Termination For Convenience Of Owner*

A. Owner may terminate Contractor's performance under the Contract for Owner's convenience at any time upon written notice to Contractor, whether or not Contractor is in default and, in such event, Owner's only liability will be to pay Contractor the following amounts:

1. The unpaid balance due Contractor for the Work actually performed and accepted, based on the schedules and tables, unit prices and lump sums enumerated in the Contract Documents; and

2. Reasonable expenditures made and costs incurred by Contractor for the materials ordered by Contractor for the Work prior to the date of termination and not incorporated in the Work, less reasonable salvage or resale value, provided such materials conform to the Specifications, and for labor performed on any such materials prior to the date of termination and associated labor insurance and labor payroll taxes.

B. From the total of the items enumerated in items 1 and 2 above inclusive, there shall be deducted the total dollar amount of all claims of Owner against Contractor, including the total dollar amount of claims on account of delay or defects in materials and/or workmanship.

C. The amount payable under the provisions of this section, plus the sum of all amounts previously paid under the Contract, shall in no event exceed the Contract Price.

D. Contractor shall transfer and assign to Owner in accordance with Owner's instructions, all materials, supplies, Work in process, and other things for which Contractor is entitled to receive reimbursement hereunder, and all plans, drawings, working drawings, sketches, specifications, and information in connection with the Work, and shall take such action as may be necessary to secure to Owner, at Owner's election, the rights of Contractor under any or all orders and subcontracts made in connection with the Work.

E. If and as Owner so directs or authorizes, Contractor shall sell at a price approved by Owner, or retain at a price mutually agreeable, any such materials, supplies, Work in progress or other things as referred to above. The proceeds of any such sale or the agreed price shall be paid or credited to Owner in such manner as Owner may direct to reduce the amount payable by Owner.

F. If requested by Owner, Contractor shall endeavor to cancel any or all of its outstanding orders or subcontracts upon such terms as may be approved by Owner.

G. Upon the performance of the obligations described in this section by the respective parties, all obligations of the respective parties under the Contract shall be discharged, except such obligations as by their terms, express or implied, contemplate continued obligations after acceptance of the Work.

H. Nothing herein shall affect the right of Owner to terminate Contractor's performance as provided elsewhere in the Contract Documents.

SC 18.09 Add the following new paragraph immediately following 18.08:SC

18.09 Location of Existing Structures on the Surface

A. The drawings show the location for all existing structures. The Owner, however, assumes no responsibility for failure to show any or all of these structures on the drawings or to show them in their exact location and such failure shall not be considered sufficient basis for claims for additional compensation for extra work or for increasing the pay quantities unless the existing structure requires the construction of facilities that are not included in the Contract Documents.

END OF SECTION

REQUEST FOR INFORMATION NO._____

DATE OF REQUEST:
RESPONSE CODE: **[ ] CRITICAL** **[ ] ROUTINE**
DATE RESPONSE REQUIRED:
OWNER: **JACKSON SHAW COMPANY**
PROJECT NO.: **4670-22.676**
PROJECT TITLE: **DRY BERRY CREEK WASTEWATER INTERCEPTOR**
CONTRACTOR:

Contractor shall submit a timely proposal, if Contractor believes the response given requires an adjustment in Contract Price or Contract Time, so as not to delay Contractor's Work in accordance with Section 007200 – General Conditions.

Reference: _____
Specification(s) Drawing(s) / Detail(s)

Information Required:

Response:

Estimated Change in Contract Price and Contract Times, if applicable (non-binding, preliminary):

Contract Price $ [increase] [decrease].
Contract Time days [increase] [decrease].

REQUESTED: RESPONSED:

By: _____ By: _____
Contractor (Authorized Signature) Engineer (Authorized Signature)

Title: _____ Title: _____

Date: _____ Date: _____

CONTRACTOR TO PROVIDE AT A LATER DATE

TECHNICAL SPECIFICATIONS

SECTION G1 – BARRICADES, SIGNS AND TRAFFIC HANDLING

G1.01 SCOPE OF WORK

A. This specification covers the requirements to provide, install, move, replace, maintain, clean and remove temporary or permanent street closure barricades, signs or other devices required to handle the traffic in conformance with the current edition of the Texas Manual of Uniform Traffic Control Devices for Streets and Highways (TMUTCD)and as indicated by the Engineer or the City.

G1.02 SUBMITTALS

A. Within 10 days after the Notice to Proceed, the Contractor shall submit to the Engineer a site-specific Traffic Control Plan. The Traffic Control Plan shall be sealed by a Professional Engineer Registered in the State of Texas as required by the Project Specifications, City, or Engineer.

G1.03 CONSTRUCTION METHODS

A. Prior to commencing the construction, suitable "Barricades, Signs and Traffic Handling" devices shall be installed to protect the workers and the public. A traffic control plan specific to the Project shall be designed and submitted to the City prior to the start of construction. If indicated by the Plans or requested by the City the plan shall be designed by a qualified traffic engineer who is a Registered Professional Engineer in the State of Texas.

B. The Contractor shall be responsible for installing all markers, signs and barricades conforming to the Texas Manual on Uniform Traffic Control Devices and/or as indicated. If, in the opinion of the Engineer, additional markers, signs or barricades are needed in the interest of safety, the Contractor will install such as are required or as directed by the Engineer.

G1.04 MAINTENANCE

A. It shall be the Contractor's responsibility to maintain, clean, move and replace if necessary, barricades, signs and traffic handling devices during the time required for construction of the Project. When no longer needed all temporary barricades, signs and traffic handling devices shall be removed and the area restored to its original condition or as directed by the Engineer.

G1.05 PAYMENT

A. Payment shall be made for the work performed in accordance with this specification and the appropriate bid items of the Proposal and Bid Schedule.

END OF SECTION

TECHNICAL SPECIFICATIONS

SECTION G2 – SITE PREPARATION

G2.01 SCOPE OF WORK

A. This specification covers the requirements for performing all clearing, grubbing and stripping of topsoil complete as shown on the Plans and as specified herein.

G2.02 SUBMITTALS

A. None required unless specifically called for in the Plans, Standards or requested by the City or the Engineer.

G2.03 CLEARING AND GRUBBING

A. Except as otherwise directed, cut, grub, remove and dispose of all trees, stumps, brush, shrubs, roots and any other objectionable material within the limits defined on the Plans.

B. All trees, stumps, brush, shrubs, roots and other objectionable material shall be cut, grubbed, removed and disposed of from areas to be occupied by buildings, structures, roads, pipelines and any other areas to be stripped. Trees and brush shall be removed to a depth at least three (3) feet below the finished grade.

C. In addition, heavy growths of weeds or other plants shall be stripped from the surface in order to provide clear access to the work site and to prevent their inclusion in stockpiled soil which is to be reused later. Trees, stumps, surface plants and all debris removed from the site shall be disposed of off-site by the Contractor at his own expense.

D. Before the start of construction, protect trees or groups of trees, designated by the Engineer to remain, from damage by all construction operations by erecting suitable barriers, or by other approved means. Clearing operations shall be conducted in a manner to prevent falling trees from damaging trees designated to remain.

E. Areas outside the limits of clearing shall be protected from damage and no equipment or materials shall be stored in these areas.

F. No stumps, trees, limbs, or brush shall be buried in any fills or embankments.

G2.04 STRIPPING

A. Strip topsoil from all areas to be occupied by buildings, structures, roadways and all areas to be excavated or filled. Avoid mixing topsoil with subsoil and stockpile topsoil in areas on the site as approved by the Engineer. Topsoil shall be free from brush, trash, large stones and other extraneous material and protected until it is placed as specified under Section G7- LOAMING, HYDROSEEDING AND PERMANENT EROSION CONTROL. Dispose of any remaining topsoil as directed by the City. All excess topsoil shall remain property of the City at its option, and Contractor shall place extra materials at a site designated by the City.

G2.05 DISPOSAL OF MATERIALS

A. All tree trunks, limbs, roots, stumps, brush, foliage, other vegetation and objectionable material shall be removed from the site and disposed of in a permitted disposal site in a manner satisfactory to the Engineer.

B. Burning of cleared and grubbed materials will not be permitted.

C. Disposal of Excavated Materials

1. Suitable excavated materials may be stockpiled to be used for backfilling. Excess excavated

materials and unsuitable backfill materials shall be disposed of by the Contractor in the following manner:

a. Clays, sands and gravel in excess of project requirements shall be disposed of by the Contractor at such locations and under consideration arranged by the Contractor at his expense.

b. Limestone and other rock excavation shall be disposed of by the Contractor at such locations and under consideration arranged by the Contractor at his expense.

2. The classification of clays, sands, gravel, limestone and rock shall be made in accordance with the Unified Soil Classification System, U.S. Army Corps of Engineers, T.M. 3-357.

3. Desirable topsoil, sod, or area fill shall be carefully removed and piled separately adjacent to the work when required. Excavated materials shall be handled at all times in such a manner as to cause a minimum of inconvenience to the City's operations, and to permit safe and convenient access to private and public property adjacent to the work

G2.06 UNAUTHORIZED EXCAVATION

A. Whenever the excavation is carried beyond or below the lines and grades as shown on the plans, except as specified above, all such excavated space shall be refilled with such material and in such a manner, as may be directed by the City, so as to insure the stability of the affected structure. Beneath all structures, space excavated without authority shall be refilled by the Contractor, at his own expense, with Class "C" concrete, crushed stone or selected fill materials, as directed by the City.

G2.07 PAYMENT

A. Payment will be made for work performed in accordance with this specification by the unit quantity for the item for right-of-way preparation in the Proposal and Bid Schedule.

END OF SECTION

TECHNICAL SPECIFICATIONS

SECTION G3 – SITE CLEARING

G3.01 SCOPE OF WORK

A. This specification covers the requirements for site clearing operations for this Project.

G3.02 SUBMITTALS

A. None required unless specifically called for in the Plans, Standards, or requested by the City or the Engineer.

G3.03 TRAFFIC

A. Conduct site-clearing operations to ensure minimum interference with roads, streets, walks and other adjacent occupied or used facilities. Do not close or obstruct streets, walks, or other occupied or used facilities without permission from authorities havingjurisdiction.

G3.04 PROTECTION

A. Provide temporary fences, barricades, coverings, or other protection to preserve existing items indicated to remain and to prevent injury or damage to persons or property. Provide protection for adjacent properties as required.

B. Restore damaged work to condition existing prior to start ofwork.

C. Protect existing trees and vegetation that are indicated to remain from physical damage. Do not store materials or equipment within tree drip line. Replace damaged trees that cannot be restored to full growth, as determined by arborist, unless otherwise acceptable to the Engineer or the City.

D. Protect existing property and easement corners and pins. In the event that property or easement corners or pins are moved disturbed or destroyed the Contractor shall replace them at his own expense. They shall be replaced by a Registered Professional Land Surveyor registered in the State of Texas.

G3.05 EXISTING SERVICES

A. Locations indicated are approximate; determine exact location before commencing work. Coordinate with local utility service requirements and comply with their instructions.

G3.06 SITE CLEARING

A. Remove trees, shrubs, grass and other vegetation, improvements, or obstructions as indicated or that interfere with new construction. Removal includes digging out stumps and roots, together with subsequent off-site disposal.

B. Strip and stockpile topsoil that will be reused in the Work.

C. Remove existing improvements, both above-grade and below-grade, to extent indicated or as otherwise required to permit new construction.

G3.07 SALVAGEABLE ITEMS

A. Carefully remove items indicated to be salvaged and store on the City's premises where indicated or directed.

G3.08 AIR POLLUTION

A. Control air pollution caused by dust and dirt; comply with governing regulations.

G3.09 REGRADING

A. Fill depressions and voids resulting from site-clearing operations. Using satisfactory soil materials, place in maximum six (6) inch deep horizontal layers and compact each layer to density of surrounding original ground.

B. Grade ground surface to conform to required contours and to provide surface drainage.

G3.10 DISPOSAL OF MATERIAL

A. Dispose of waste materials including trash, debris and excess topsoil. No waste material shall remain on the City's property.

B. Burning waste materials on site is not permitted.

G3.11 PAYMENT

A. No separate payment will be made for work performed in accordance with this specification, and the cost thereof shall be included in the proper items of the Proposal and Bid Schedule.

END OF SECTION

TECHNICAL SPECIFICATIONS

SECTION G4 - PIPE EXCAVATION, TRENCHING, EMBEDMENT, ENCASEMENT AND BACKFILLING

G4.01 SCOPE OF WORK

A. This specification covers the requirements for furnishing all labor, equipment and material and performing all work necessary, in connection with excavation, trenching, embedment, encasement, and backfilling, for the installation of water lines, storm sewer lines, wastewater lines, etc. in this Project.

G4.02 SUBMITTALS

A. Within 30 days after the Notice to Proceed, the Contractor shall submit to the Engineer or the City for approval, technical product literature including a Trench Safety Plan (which shall be sealed by a Professional Engineer registered in the State of Texas, if required) embedment material (source, gradation and type), backfill material (source, gradation and type), encasement material (if required), equipment and all other pertinent data to illustrate conformance to the specification found within.

G4.03 EXCAVATION

A. General

1. Excavation shall include the removal of any trees, stumps, brush, debris, or other obstacles that may obstruct the line of work, and the excavation and removal of all earth, rock or other materials to the extent necessary to install the pipe and appurtenances in conformance with the line and grades shown in the Plans, or as specified.

B. Maximum and Minimum Width of Trenches

1. The sides of all trenches shall be cut as nearly vertical as possible. Unless otherwise specified on the Plans, the minimum width of trench in which the pipe may be installed shall not be less than 12-inches plus the outside diameter of the pipe, and the maximum width shall not be more than 24-inches plus the outside diameter of the pipe, measured at an elevation in the trench which is 12-inches above the top of the pipe when it is laid to grade.

2. Wherever the prescribed maximum trench width is exceeded, the Contractor shall use the class embedment or encasement required by the Engineer to provide the load carrying capacity for the trench width as actually cut, and the additional cost incurred will be borne by the Contractor.

C. Sheeting and Shoring

1. Where required in the Contractor's Trench Safety System, or where required for other reasons in caving ground, or in wet, saturated or flowing materials, the sides of all trenches and excavations shall be adequately sheeted and braced so as to maintain the excavation free from slides or cave-ins.

2. Sheeting and shoring shall not be left in place unless its removal is impractical.

D. Dewatering Excavations

1. There shall be sufficient pumping equipment, in good working order, available at all times to remove any water that accumulates in excavations. Where the pipeline crosses natural drainage channels, the work shall be conducted in such a manner that unnecessary damage or delays in the prosecution of the work will be prevented. Provisions shall be made for the

satisfactory disposal of surface water pumped so as to prevent damage to public or private property. The Contractor shall be responsible for maintaining safe working conditions and suitable construction techniques.

E. Disposal of Excavated Materials

1. Suitable excavated materials may be piled adjacent to the work to be used for backfilling. Excavated materials unsuitable for backfilling, or in excess of that required for backfilling, shall be disposed of by the Contractor. Desirable topsoil, sod, etc. shall be carefully removed and piled separately adjacent to the work when required. Excavated materials shall be handled at all times in such a manner as to cause a minimum of inconvenience to public travel. Suitable selected bedding or backfill material shall be provided at no additional cost to the City.

F. Trench Depth

1. Excavation for the pipeline shall be removed to a depth below the pipe barrel and pipe bell as shown in the Plans for the type of embedment specified, and the bottom of the trench brought to true subgrade with the embedment or encasement shown in the Plans.

G. Soft Subgrade

1. Where soft or spongy material is encountered in the excavation at subgrade level, it shall be removed to such a depth that a stable foundation is achieved by replacing the unsuitable material with tamped gravel, brought to the level of the bottom of bedding.

2. Gravel used shall be washed gravel or crushed stone and may fit any gradation of size up to three (3) inches. The particular gradation shall take into consideration the actual field conditions.

H. Excavated Materials

1. Excavated materials shall be piled adjacent to the work to be used for backfilling as required. After the trench has been refilled, topsoil shall be replaced to the extent that rock excavated from the trench will be completely covered and the area is returned to its original condition.

2. Where required on the Plans or when otherwise specified, desirable topsoil shall be piled separately in a careful manner and replaced in its original position.

3. Where a trench is required to cross a paved area, the asphalt or concrete shall be saw cut and removed for a total width that is two (2) feet greater than the trench width. The Contractor shall dispose of all excavated concrete, asphalt and subgrade material that is unsuitable for backfilling or in excess of that required for backfilling.

I. Damage to Existing Utilities

1. Where existing utilities are damaged, they shall be replaced immediately with material equal to or better than the existing material. Such work shall be at the entire expense of the Contractor.

G4.04 EMBEDMENT AND ENCASEMENT

A. General

1. Embedment shall be as required in the Plans or Standards. All embedment materials shall be free of grass, roots, vegetation, and other deleterious materials. Embedment Standards are shown on the Plans or Standards.

2. When the pipe has been checked for line and grade, the trench shall be backfilled with enough granular material or concrete on both sides to hold the pipe firmly in position. When placing granular material or concrete around the pipe, care shall be taken to fill all voids around the pipe. The pipe shall not be floated. The embedment or encasement material shall be carefully tamped to assure uniform pipe support and density.

B. Embedment Materials

1. Material for embedment shall conform to the following sieve analysis:

Sieve Size	⅜" F % Retained	½" D % Retained
½"	0	0
⅜"	0-2	5-25
4m	40-85	80-100
10m	95-100	96-100

C. Concrete Embedment and Encasement

1. Concrete embedment and encasement and cap shall have a minimum compressive strength of 2,000 pounds per square inch at 28 days.

2. Dry mix will not be permitted. The concrete cushion portion of the embedment or encasement will be mixed moist or damp to give a slump of not more than one (1) inch. Concrete for the sides and top, if specified, shall be mixed to obtain a slump of not less than one (1) inch or more than three (3) inches.

3. After pipe joints are completed, the voids at the joints in the embedment section shall be filled with concrete, and the embedment shall be brought up to proper grade. Where concrete is placed over or along the pipe, it shall be placed in such a manner as not to damage or injure the joints or displace the pipe. Care shall be taken in the placement of concrete to assure that a uniform pad, free of voids and of specified thickness, is constructed under the entire pipe section.

4. A cleavage line between the base concrete and the side embedment concrete will not be allowed. Backfilling shall be done in a careful manner and at such time, after concrete embedment or encasement has been placed, as not to damage the concrete in any way.

G4.05 BACKFILLING

A. General

1. Backfilling shall include the refilling and consolidating of the fill in trenches and excavations up to the surrounding ground surface or road grade at crossings. No backfill shall be placed until the Engineer, the City or his authorized Inspector has inspected the trench and pipe in place and has authorized the placing of backfill.

2. Backfilling shall be done with select material or concrete backfill as described hereafter and shown on the Plans. No material of a perishable, spongy or otherwise unsuitable nature shall be used in backfilling.

B. Select Backfill Material

1. Unless otherwise shown on the Plans, or approved by the Engineer, the select material backfill shall be Specification Section SD4 Flexible Base, Type A Grade 1.

2. If approved by the Engineer, good, sound earth may be used as select material for backfill over the pipe. Good, sound earth as defined as gravel, sandy loam or loam, free from excessive clay. Select material shall not have rocks with an average dimension larger than one (1) inch, and no dimension greater than two (2) inches.

3. An alternative to the flexible base as select backfill will be on-site or imported select material so long as it is properly moisture-conditioned, placed and compacted.

4. It shall be the full responsibility of the Contractor to explore the project and subsurface materials to determine if the trench excavation will be suitable for use as select materials and to follow as closely as possible this Specification to insure a good, sound pipeline when completed.

C. Concrete Trench Cap

1. Where 36-inch minimum cover cannot be obtained or due to potential surface loading, the City may require a cap to be installed.

D. Concrete Backfill

1. Where shown on the Plans, concrete backfill shall consist of selected rock material or granular sand material mixed with a minimum of three sacks of cement per cubic yard. All material shall be mixed in a concrete mixer or transit mixed unless otherwise approved by the City.

E. Backfilling Operation

1. Backfilling operation outside of pavement shall be compacted to the required density without damaging the pipe or bedding. Backfill under non paved areas, two feet outside of any structure or utilities and excluding lines within a floodplain, streams and watercourses shall be compacted to 90% of the maximum dry density in accordance Tex-114-E. Areas within two feet of structures or existing utilities and areas within a floodplain, streams and water courses shall be compacted to 95% in accordance with Tex-114-E. Prior to any compaction, moisture shall be within $\pm$3% of the optimum moisture content.

2. All trenches under proposed or existing concrete roadways, driveways and sidewalks, paved waterways, brick roadways, asphaltic roadways with concrete base, gravel roadways, and roadways with gravel base and asphalt surface, shall be backfilled to the required density in six (6) inch maximum lifts without damaging the pipe or bedding except the first lift over the pipe bedding will be twelve (12) inches in depth. Swelling soils (soils with a plasticity index of 20 or more) shall be sprinkled as required to provide not less than optimum moisture nor more than 3% over the optimum moisture content to the extent necessary to provide not less than 95% nor more than 102% of the maximum dry density as determined in accordance with Tex-114-E. Non-swelling soils (soils with a plasticity index less than 20) shall be sprinkled as required and compacted to the extent necessary to provide not less than 95% of the optimum dry density with the moisture within $\pm$3% of the optimum moisture content in accordance with Tex-114-E. Jetting with water will not be permitted. Flexible base used as select backfill shall be compacted to 95% of Tex-113E at $\pm$3% of the optimum moisture content.

3. After the trench has been refilled, topsoil shall be replaced to the extent that rock excavated from the trench will be completely covered or removed and the area is returned to its original condition, except that in cultivated areas a minimum of six (6) inches of topsoil shall be replaced.

G4.06 PAYMENT

A. No separate payment will be made for work performed under this Specification for excavating, trenching, embedment, and backfilling. All costs incurred shall be included in the contract price for the appropriate items in the Proposal and Bid Schedule.

B. No separate payment will be made for the bedding used in embedment. All costs incurred shall be included in the contract price for the appropriate bid item.

C. Separate payment, if authorized by the City, will be made for crushed stone or washed gravel as described in these specifications under Section G4.02(G), SOFT SUBGRADE, at the contract unit price per cubic yard as provided in the Proposal and Bid Schedule under "Extra Gravel for Embedment."

D. Separate payment will be made for 2,000 psi Concrete Encasement or Backfill at the contract unit price per cubic yard or linear foot as provided in the Proposal and Bid Schedule under 2,000 psi Concrete Encasement. Concrete and three (3) sack granular sand or rock material mix backfill will be measured in cubic yards or linear feet actually placed based on actual trench width not to exceed the specified maximum trench width and will be paid for at the contract price per cubic yard or linear foot as provided in the Proposal and Bid Schedule.

E. Where authorized by the Engineer, gravel used to replace unsuitable material will be paid for at the unit bid price for Extra Gravel for embedment.

END OF SECTION

TECHNICAL SPECIFICATIONS

SECTION G5 – GRANULAR FILL MATERIALS

G5.01 SCOPE OF WORK

A. This specification covers the requirements for the use of granular fill materials for this Project.

G5.02 SUBMITTALS

A. Within 30 days after the Notice to Proceed, the Contractor shall submit to Engineer or the City for approval, technical product literature including the source of the material, gradation, type of material, and all other pertinent data to illustrate conformance to the specification found within.

G5.03 GENERAL

A. Granular fill materials are specified in this Section, but their use for bedding pipe, pavement base, are specified in detail in sections G4 TRENCHING, BACKFILLING AND COMPACTION and SD4 FLEXIBLE BASE. The Engineer may respectively order the use of fill materials for purposes other than those specified in other Sections if, in his/her opinion, such use is advisable.

G5.04 MATERIALS

A. Common fill shall consist of mineral soil, substantially free of clay, organic material, loam, wood, trash, and other objectionable material which may be compressible, or which cannot be compacted properly. Common fill shall not contain stones larger than six (6) inches in any dimension, broken concrete, masonry, rubble, asphalt pavement, or other similar materials. It shall have physical properties, as approved by the Engineer, such that it can be readily spread and compacted.

B. Select common fill shall be as specified above for common fill except that the material shall contain no stones larger than two (2) inches in its largest dimension.

C. Crushed Stone Backfill shall consist of hard, durable, particles of proper size and gradation, free from sand, loam, clay, excess fines and deleterious materials. The size of the particles shall be uniformly graded such that the following bedding specifications are met:

Sieve Size	3/8" F % Retained	½" D % Retained	Washed Gravel % Retained
½"	0	0	0
3/8"	0-2	5-25	---
4m	40-85	80-100	---
10m	95-100	96-100	---
¾"	---	---	100

D. Crushed Stone Base shall consist of sound, durable stone, free of any foreign material, angular in shape, free from structural defects and comparatively free of chemical decay. This material shall comply with Texas Department of Transportation Item 248, Type "A", Grade 1 unless otherwise shown on the Plans for Standards. The stone shall have a maximum size of 7/8-inch.

E. Cement Stabilization Sand Backfill shall consist of a mixture of ASTM C33 fine aggregate and Type I cement. The mix shall be proportioned of two (2) sacks of cement per cubic yard.

G5.05 PAYMENT

A. No separate payment will be made for work performed in accordance with this specification, and the cost thereof shall be included in the proper items of the Proposal and Bid Schedule.

END OF SECTION

TECHNICAL SPECIFICATIONS

SECTION G6 – SEDIMENTATION AND TEMPORARY EROSION CONTROL

G6.01 SCOPE OF WORK

A. This specification covers the requirements necessary to perform all installation, maintenance, removal and area cleanup related to sedimentation control work as shown on the Plans and as specified herein.

G6.02 SUBMITTALS

A. Within 10 days after Notice to Proceed, the Contractor shall submit to the Engineer for approval, technical product literature for all commercial products to be used for sedimentation and erosion control.

G6.03 GENERAL

A. The work shall include, but not necessarily be limited to: triangular filter dike, rock berm, silt fence, curb inlet protection, stabilized construction entrance, tree protection, excelsior matting, and temporary mulching, sediment removal and disposal, device maintenance, removal of temporary devices, temporary mulching, excelsior matting installation and final cleanup. All sedimentation and erosion control shall be installed prior to the start of any construction activities.

G6.04 QUALITY ASSURANCE

A. The Contractor shall be responsible for the timely installation and maintenance of all sedimentation control devices necessary to prevent the movement of sediment from the construction site to off site areas or into the stream system via surface runoff or underground drainage systems. Measures in addition to those shown on the Plans necessary to prevent the movement of sediment off site shall be installed, maintained, removed, and cleaned up at the expense of the Contractor. No additional charges to the City will be considered.

B. Sedimentation and erosion control measures shall conform to the requirements outlined in the Texas Natural Resources Conservation Commission, Chapter 213.

G6.05 MATERIALS

C. Silt Fence

1. Steel posts shall be a minimum of four (4) feet in length, heavy weight T-Post.

2. Welded wire fabric shall be two-inch by four-inch (2”x4”) mesh of 12-gauge by 12-gauge galvanized wire mesh.

3. Silt fence fabric shall be a 4.5 oz minimum non-woven geotextile filter fabric 36-inches wide.

4. Tie wires for securing silt fence fabric to wire mesh shall be light gauge metal clips (hog rings), or 1/32-inch diameter soft aluminum wire.

5. Prefabricated commercial silt fence may be substituted for built-in-field fence. Prefabricated silt fence shall be "Envirofence" as manufactured by Mirafi Inc., Charlotte, NC or equal.

E. Stabilized Construction Entrance

1. Stabilized construction entrance shall have a minimum width of 12-feet and a minimum length of 50-feet.

2. An eight (8) inch high diversion ridge shall be constructed 15-feet from the edge of the

existing roadway.

3. Stabilized construction entrance shall be graded to drain towards the existing roadway at a two- percent (2%) slope.

4. Rock shall be four-inches to eight-inches (4”-8”) coarse aggregate.

5. Rock shall be placed to a depth of at least eight (8) inches.

F. Tree Protection – Chain Link Fence

1. Chain link fence shall be five (5) feet in height.

2. Fence shall be installed around the driplines of the trees to be protected.

G. Tree Protection – Wood Slats

1. Where any exceptions result in a fence being closer than four (4) feet to a tree trunk, protect the trunk with strapped-on-planking two inches by four inches (2”x4”) wood slats to a height of eight (8) feet, or to the limits of lower branching in addition to the reduced fencing provided.

2. Trees most heavily impacted by construction activities should be watered deeply once a week during periods of hot, dry weather. Tree crowns should be sprayed with water periodically to reduce dust accumulation on the leaves.

3. Any trenching required for the installation of landscape irrigation shall be placed as far from existing tree trunks as possible.

4. No landscape topsoil dressing greater than four (4) inches shall be permitted within the dripline of a tree. No soil is permitted on the root flare of any tree.

5. No vehicles or equipment shall be allowed to park within the dripline of an existing tree.

H. Soil Retention Blankets

1. Soil retention blankets shall be installed in all seeded drainage swales and ditches as shown on the Plans or as directed by the Engineer. Only soil retention blankets included on TxDOT’s Approved Products List will be considered acceptable for use on this Project.

I. Temporary Mulch

1. Temporary mulch shall be applied to areas where rough grading has been completed but final grading is not anticipated to begin within 30 days of the completion of rough grading.

G6.06 INSTALLATION

A. Silt Fence Installation

1. Layout the silt fence following as closely as possible to the contour.

2. Clear the ground of debris, rocks, and plants (including grasses taller than two (2) inches) to provide a smooth flow approach surface. Excavate four-inches deep by four-inches wide (4”x4”) trench on upstream side of face per Plans.

3. Drive the heavy duty T-post at least 12-inches into the ground and at a slight angle towards the flow.

4. Attach the two-inches by four-inches (2"x4") 12-gauge welded wire mesh to the T-post with $11^{1}/_{2}$-gauge galvanized T-post clips. The top of the wire to be 24-inches above ground level. The welded wire mesh to be overlapped six (6) inches and tied at least six (6) times with hog rings.

5. The silt fence to be installed with a skirt a minimum of 11-inches wide placed on the uphill side of the fence inside excavated trench. The fabric to overlap the top of the wire by one (1) inch.

6. Anchor the silt fence by backfilling with excavated dirt and rocks.

7. Geotextile splices should be a minimum of 18-inches wide attached in at least six (6) places.

E. Stabilized Construction Entrance Installation

1. Clear the area of debris, rocks or plants that will interfere with installation.

2. Grade the area for the entrance to flow back on to the construction site. Runoff from the stabilized construction entrance onto a public street will not be allowed except for the first 15 feet connecting to the public street.

3. Place geotextile fabric if required.

4. Place rock as required.

F. Tree Protection – Chain Link Fence

1. Tree protection fences shall be installed prior to the commencement of any site preparation work (clearing, grubbing or grading).

2. Fences shall completely surround the tree, or clusters of trees; will be located at the outermost limit of the tree branches (dripline), and will be maintained throughout the construction project in order to prevent the following:

   a. Soil compaction in the root zone area resulting from vehicular traffic, or storage of equipment or materials.

   b. Root zone disturbances due to grade changes greater than six (6) inches cut or fill or trenching not reviewed and authorized by the City.

   c. Wounds to exposed roots, trunks or limbs by mechanical equipment.

   d. Other activities detrimental to trees, such as chemical storage, cement truck cleaning and fire.

3. Exceptions to installing fences at tree driplines may be permitted in the following cases:

   a. Where permeable paving is to be installed, erect the fence at the outer limits of the permeable paving area.

   b. Where trees are close to a proposed building, erect the fence no closer than six (6) feet to building.

G. Tree Protection – Wood Slats

1. Any roots exposed by construction activity shall be pruned flush with the soil. Backfill root areas with good quality top soil as soon as possible. If exposed root areas are not backfilled within two (2) days, cover them with organic material in a manner which reduces soil temperature, and minimizes water loss due to evaporation.

2. Prior to excavation or grade cutting within tree dripline, make a clean cut between the disturbed and undisturbed root zones with a rock saw or similar equipment, to minimize damage to remaining roots.

3. Pruning to provide clearance for structures, vehicular traffic and equipment shall take place before construction starts.

H. Excelsior Matting

1. The area to be covered shall be properly prepared, fertilized and seeded with permanent vegetation before the blanket is applied.

2. When the blanket is unrolled, the netting shall be on top and the fibers in contact with the soil over the entire area.

3. The blankets shall be applied in the direction of water flow, and stapled. Blankets shall be placed a minimum of three (3) rows, of four (4) foot wide (total approx. 12-foot width) within the drainage swale/ditch and stapled together in accordance with Manufacturer's instructions.

4. Side overlaps shall be four (4) inch minimum. The staples shall be made of wire, 0.091-inchin diameter or greater, "U" shaped with legs 10-inches in length and a $1^{1}/_{2}$ -inch crown. The staples shall be driven vertically into the ground, spaced approximately two (2) linear feet apart, on each side, and one (1) row in the center alternately spaced between each size.

5. Upper and lower ends of the matting shall be buried to a depth of four (4) inches in a trench.

6. Erosion stops shall be created every 25-feet by making a fold in the fabric and carrying the fold into a silt trench across the full width of the blanket. The bottom of the fold shall be four (4) inches below the ground surface. Staple on both sides of fold.

7. Where the matting must be cut or more than one (1) roll length is required in the swale, turn down upper end of downstream roll into a slit trench to a depth of four (4) inches. Overlap lower end of upstream roll four (4) inches past edge of downstream roll and staple.

8. To ensure full contact with soil surface, roll matting with a roller weighing 100-pounds per foot of width perpendicular to flow direction after seeding, placing matting and stapling.

9. Thoroughly inspect channel after completion. Correct any areas where matting does not present a smooth surface in full contact with the soil below.

I. Temporary Mulching

1. Straw mulch shall be applied at rate of 100 lbs/1,000 ft^2 and tackified with latex acrylic copolymer at a rate of 1 gal/1,000 ft^2 diluted in a ratio of 30 parts water to one (1) part latex acrylic copolymer mix.

G6.07 MAINTENANCE AND INSPECTIONS

A. Inspections

1. Contractor shall make a visual inspection of all sedimentation control devices once per week and promptly after every rain event exceeding ¼-inch. If such inspection reveals that additional measures are needed to prevent movement of sediment to offsite areas or into the vent trench, Contractor shall promptly install additional devices as needed. Sediment controls in need of maintenance shall be repaired promptly.

B. Device Maintenance

1. Silt Fences

a. Remove accumulated sediment when buildup reaches six (6) inches.

b. Replace damaged fabric, or patch with a two (2) foot minimum overlap.

c. Replace or repair any sections crushed or collapsed in the course of construction activity.

d. Make other repairs as necessary to ensure that the fence is filtering all runoff directed to the fence.

2. Curb Inlet Protection

a. Repair any damaged fabric, or patch with a two (2) foot minimum overlap.

b. Replace any damaged sandbags.

c. Remove accumulated sediment.

3. Stabilized Construction Entrance

a. Periodic top dressing with additional stone may be required as conditions demand to prevent tracking or flowing of sediment onto public rights-of-way.

c. Cleanout any measures used to trap sediment as needed.

d. All sediment spilled, dropped, washed or tracked on to public rights-of-way should be removed immediately by the Contractor.

e. When necessary, wheels should be cleaned to remove sediment prior to entrance onto public rights-of-way.

f. When washing is required, it should be done on an area stabilized with crushed stone that drains into an approved sediment trap or sediment basin.

g. All sediment should be prevented from entering any storm drain, ditch or water course by using approved methods.

6. Tree Protection – Chain Link Fence

a. Repair or replace any chain link fence damaged by construction activities.

7. Tree Protection – Wood Slats

a. Repair or replace any wood slats damaged by construction activities.

8. Excelsior Matting

a. Replace matting as needed to prevent erosion fromoccurring.

9. Temporary Mulch

a. Replace mulch as needed to prevent erosion fromoccurring.

G6.08 REMOVAL AND FINAL CLEANUP

A. Once the site has been fully stabilized against erosion, remove sediment control devices and all accumulated silt. Dispose of silt and waste materials in proper manner. Re-grade all areas disturbed during this process and stabilize against erosion with surfacing materials as indicated on the Plans.

G6.09 PAYMENT

A. Silt fence will be paid per linear foot installed as listed in the Proposal and Bid Schedule

B. Stabilized Construction Entrance will be paid per each installed as listed in the Proposal and Bid Schedule.

C. Tree protection will be paid per each installed as listed in the Proposal and Bid Schedule.

D. Erosion Control Blankets will be paid per square yard as listed in the Proposal and Bid Schedule.

E. No separate payment will be made for all other work performed in accordance with this specification, and the cost thereof shall be included in the proper items of the Proposal and Bid Schedule.

END OF SECTION

TECHNICAL SPECIFICATIONS

SECTION G7 – LOAMING, HYDROSEEDING AND PERMANENT EROSION CONTROL

G7.01 SCOPE OF WORK

A. This specification covers the requirements to provide erosion control and place topsoil, finish grade, apply fertilizer, hydraulically apply seed and mulch and maintain all seeded areas as shown on the Plans and as specified herein, including all areas disturbed by the Contractor.

G7.02 SUBMITTALS

A. Within 30 days after the Notice to Proceed, the Contractor shall submit to the Engineer or the City for approval, samples of all materials to be used and all other pertinent data to illustrate conformance to the specification found within.

G7.03 TOPSOIL

A. Topsoil shall be fertile, friable, natural topsoil typical of topsoil of the locality and shall beobtainedfrom a well drained site that is free of flooding. It shall be without admixture of subsoil or slag and free of stones, lumps, plants or their roots, sticks, clay, peat and other extraneous matter and shall not be delivered to the site or used while in a frozen or muddy condition. Topsoil as delivered to the site or stockpiled shall have pH between 6.0 and 7.0 and shall contain not less than three (3) percent organic matter as determined by loss of ignition of moisture-free samples dried at 100 degrees Celsius. The topsoil shall meet the following mechanical analysis:

	Percentage Passing
1-inch screen opening	100
No. 10 mesh	95 - 100
No. 270 mesh	35 - 75
0.002 mm*	5 - 25

* Clay size fraction determined by pipette or hydrometer analysis.

B. At least 10 days prior to anticipated start of topsoiling operations, a one (1) pint sample of topsoil material shall be delivered by the Contractor to a laboratory for testing and approval. All testing shall be at the sole expense of the Contractor. Based on tests performed by the laboratory, the topsoil shall be identified as acceptable, acceptable with certain fertilizer and limestone applications or unacceptable. If the topsoil is found acceptable the fertilizer and lime requirements will be as specified or as recommended by the laboratory. If the topsoil is found unacceptable, the Contractor shall be responsible for identifying another source of topsoil and shall incur all expenses associated with testing additional samples. All topsoil incorporated into the site work shall match the sample provided to the laboratoryfor testing. Topsoil stockpiled under other Sections of these Specifications may be used subject to thetesting and approval outlined above. Contractor will be responsible for screening stockpiled topsoil and providing additional topsoil as required at his/her own expense.

C. Lime shall be ground limestone containing not less than 85-percent calcium and magnesium carbonates and be ground to such fineness that at least 50-percent shall pass a 100-mesh sieve and at least 90-percent shall pass a 20-mesh sieve.

D. All planting shall be done between May 1 and September 15 except as specifically authorized in writing. If planting is authorized to be done outside the dates specified, the seed shall be planted with the addition of winter fescue (Kentucky 31) at a rate of 100 lbs. per acre.

E. The seed shall be furnished and delivered premixed in the proportions specified within. A Manufacturer's Certificate of Compliance to the specified mixes shall be submitted by the Manufacturers for each seed type. These certificates shall include the guaranteed percentages of purity, weed content and germination of the seed and also the net weight and date of shipment. No seed may be sown until the Contractor has submitted the certificates.

F. Seed shall be delivered in sealed containers bearing the dealer's guaranteed analysis.

G. Mulch shall be a specially processed cellulose fiber containing no growth or germination-inhibiting factors. It shall be manufactured in such a manner that after addition and agitation in slurry tanks with water, the fibers in the material become uniformly suspended to form a homogeneous slurry. When sprayed on the ground, the material shall allow absorption and percolation of moisture. Each package of the cellulose fiber shall be marked by the manufacturer to show the air-dry weight content and not contain in excess of 10-percent moisture.

H. Excelsior matting blanket installed in all drainage swales and ditches shall be in accordance withSection G6- SEDIMENTATION AND TEMPORARY EROSION CONTROL.

G7.04 APPLICATION OF TOPSOIL

A. Unless otherwise shown on the plans, topsoil shall be placed to a minimum compacted depth of six (6) inches on all parts of the site not covered with structures, pavement, or existing woodland.

B. For all areas to be seeded:

1. Fertilizer (10-20-10) shall be applied at the rate of 30-lbs. per 1,000-sq. ft. or as determinedby the soil test.

2. Seed shall be applied at the rate of five (5) lbs. per 1,000-sq. ft.

3. Fiber mulch shall be applied at the rate of 40-lbs. per 1,000-sq. ft.

C. After the topsoil is placed and before it is raked to true lines and rolled, limestone shall be spread evenly over the loamsurface and thoroughly incorporated by heavy raking to at least one half the depthoftopsoil.

D. The application of fertilizer may be performed hydraulically in one (1) operation with hydroseeding and fiber mulching. The Contractor is responsible for cleaning all structures and paved areas of unwanted deposits of the hydroseeded mixture.

G7.05 INSTALLATION OF TOPSOIL

A. Previously established grades, as shown on plans shall be maintained in a true and evencondition.

B. Subgrade shall be prepared by tilling prior to placement of topsoil to obtain a more satisfactory bond between the two layers. Tillage operations shall be across the slope. Tillage shall not take place on slopes steeper than two (2) horizontal to one (1) vertical or where tillage equipment cannot be operated. Tillage shall be accomplished by disking or harrowing to a depth of nine (9) inches parallel to contours. Tillage shall not be performed when the subgrade is frozen, excessively wet, extremely dry or in other conditions which would not permit tillage. The subgrade shall be raked and all rubbish, sticks, rootsand stones larger than two (2) inches shall be removed. Subgrade surfaces shall be raked or otherwise loosened immediately prior to being covered with loam.

C. Topsoil shall be placed over approved areas to a depth sufficiently greater than required so that after natural settlement and light rolling, the complete work will conform to the lines, grades and elevations indicated. No loam shall be spread in water or while frozen or muddy.

D. After topsoil has been spread, it shall be carefully prepared by scarifying or harrowing and hand raking. All stiff clods, lumps, roots, litter and other foreign material shall be removed fromthe loamed area and disposed of by the Contractor. The areas shall also be free of smaller stones, in excessive quantities, as

determined by the Engineer or the City. The whole surface shall then be rolled with a hand roller weighing not more than 100-lbs per foot of width. During the rolling, all depressions caused by settlement of rolling shall be filled with additional loamand the surface shall be regraded and rolleduntil a smooth and even finished grade is created.

E. Seeding shall be done within 10 days following soil preparation. Seed shall be applied hydraulically at the rates and percentages indicated. The spraying equipment and mixture shall be so designed that when the mixture is sprayed over an area, the grass seed and mulch shall be equal in quantity to the specified rates. Prior to the start of work, the Contractor shall furnish the Engineer with a certified statement as to the number of pounds of materials to be used per 100-gallons of water. This statement shall also specify the number of square feet of seeding that can be covered with the quantity of solution in the Contractor's hydroseeder. Upon completion of seeding operations, the Contractor shall furnish the Engineer and the City with a certified statement on the actual quantity of solutionapplied.

F. In order to prevent unnecessary erosion of newly topsoiled and graded slopes and unnecessarysiltationof drainageways, the Contractor shall carry out seeding and mulching as soon as he/she has satisfactorily completed a unit or portion of the project. A unit or portion of the project shall be determined by the City or Engineer. When protection of newly loamed and graded areas is necessary at a time which is outside of the normal seeding season, the Contractor shall protect those areas by what ever means necessary as approved by the Engineer and the City and shall be responsible for prevention of siltation in the areas beyond the limit of work.

G. When newly graded subgrade areas cannot be topsoiled and seeded because of season or weather conditions and will remain exposed for more than 30 days, the Contractor shall protect those areasagainst erosion and washouts in accordance with Section G6- SEDIMENTATION AND TEMPORARY EROSION CONTROL, or by other measures as approved by the Engineer and the City. Prior to application of topsoil, any such materials applied for erosion control shall be removed or thoroughly incorporated into the subgrade by disking. Fertilizer shall be applied prior to spreading of topsoil.

H. On slopes, the Contractor shall provide against washouts by a method approved by the Engineer and the City. Any washout which occurs shall be regraded and reseeded at the Contractor's expense until a good sod is established.

G7.06 HYDROMULCHING

A. Fertilizer: 18-18-5, (Nitrogen, Phosphoric Acid, Potash) show release granular at a rate of 25-lbs per 1,000-sq. ft.

B. Water: The Contractor shall provide water necessary for grass planting and maintenance until acceptance by the City.

C. Planting Seasons: Grass planting by sodding, sprigging, or hydromulching shall normally be done between May 1 and September 15.

D. Hydromulching General

1. Submit Manufacturer’s product specifications and guaranteed purity analysis for fertilizer.

2. Product Delivery, Storage and Handling

a. Deliver fertilizer to site in original unopened containers bearing Manufacturer’s guaranteed chemical analysis, name, trademark and conformance to State Law.

b. Store fertilizer in a dry location and protect from weather.

3. Guaranty and Replacement

a. Provide guaranty for a period of one (1) year after final completion and acceptance of project, that the installed grass areas be at least the quality and condition as during acceptance.

b. Rehydromulch unacceptable areas during the guaranty period. Guaranty shall not include damage or loss of lawn due to acts of God, acts of vandalismor negligence on the part of the City.

E. Native Grass Hydromulching-Products

1. Grass Seed: Common Bermuda grass, hulled, minimum 82% pure live seed. All grass seed shall be free fromnoxious weed, grade "A" recent crop, recleaned and treated with appropriate fungicide at time of mixing. Seed shall be furnished in sealed, standard containers with dealer's guaranteed analysis.

2. Mulch: Conwed regular wood fiber mulch or approved equal.

3. Fertilizer: 18-18-5, water-soluble or an approved equal.

4. Topsoil: Supply high quality imported topsoil of loamy character to the limits shown on the Plans, high in humus and organic content fromlocal agriculture source. Topsoil to be free from clay, lumps, coarse sands, stones, roots and other foreign matter. There shall be no toxic amounts of acid or alkaline elements. Soil to be used for on-site mixing of backfill.

F. Native Grass Hydromulching-Execution

1. Preparation: Fine grade to final elevation removing any debris and insuring the seedbed is smooth.

2. Installation: Use a hydromulcher (sprayer) and apply the mixture at the following rate. (Mix in accordance with Manufacturer's recommendations.)

a. Hydromulch mixture shall contain 2.5-lbs. of common Bermuda grass seed per 1,000-sq. ft. hydromulch applied.

b. Mulch – 60-lbs. per 1,000-sq. ft.

c. Fertilizer – 25-lbs (18-18-5) per 1,000-sq. ft.

3. General Maintenance

a Water the completed installation as necessary to insure germination of grass.

b. Maintain grass areas until complete germination and establishment of all areas.

c. Correct defective work as soon as apparent. Maintenance shall include, but not be limited to, weeding and fertilizing.

d. Clean up: Remove trash and debris from the site.

e. Acceptance: Substantial completion inspection to determine acceptance of grassareas will be made by the City after complete germination and coverage has been attained.

G7.07 MAINTENANCE OF DEVELOPING GRASS

A. The Contractor shall water and maintain all grassed areas until final acceptance. He shallalsore-fertilize at the rate of one (1) pound of nitrogen and one (1) pound of phosphorous per 1,000-sq. ft. every 60 days until the grass is accepted.

B. Areas which, due to settling or improper leveling, do not have positive drainage shall be re-leveled with topsoil and replanted with grass.

C. Areas damaged by erosion, vehicle ruts and similar damage shall be re-leveled with topsoil and replanted. Finished ground surface shall be sufficiently smooth and level to facilitate mowing.

G7.08 ACCEPTANCE

A. Work under this section shall be considered acceptable when finish graded surfaces are level and well-drained, when there are no bare spots larger than three (3) square feet, when no more than 10 percent of the total area has bare spots larger than one (1) square foot, when not more than 15 bare spots larger than six (6) inches square and the grass is at least two (2) inches high, and when other requirements listed herein are met.

B. Acceptance of work normally coincides with final acceptance of the entire project. However, seasonal factors may be cause for delay in grass planting, development, and acceptance.

C. The City will accept responsibility for normal maintenance when grass is accepted. However, the Contractor shall remain responsible for any subsequent grass damage that he causes and for warranty of materials and workmanship for a period of not less than one (1) year from the time of acceptance.

D. The Contractor shall furnish full and complete written instruction for maintenance of the seeded areas to the City at the time of acceptance.

G7.09 PAYMENT

A. No separate payment will be made for finish grading, placement of topsoil or grass planting and fertilizing. All related costs shall be included in the proper item of the Proposal and Bid Schedule.

END OF SECTION

TECHNICAL SPECIFICATIONS

SECTION G8 – MISCELLANEOUS WORK AND CLEANUP

G8.01 SCOPE OF WORK

A. This specification covers the requirements to do the miscellaneous work not specified in other sections but obviously necessary for the proper completion of the work as shown on the Plans.

G8.02 SUBMITTALS

A. Within 10 days after the Notice to Proceed, the Contractor shall submit to the Engineer, in triplicate, a breakdown of any lump sum included in the Proposal and Bid Form. This breakdown shall be subject to approval by the Engineer and when so approved shall become the basis for determining progress payments and for negotiation of change orders, if required. In some contracts a lump sum item shall not be provided in the Proposal and Bid Form and shall be subsidiary to the other work items.

G8.03 GENERAL

A. When applicable, the Contractor will perform the work in accordance with other sections of this Specification. When no applicable specification exists the Contractor shall perform the work in accordance with the best modern practice and/or as directed by the Engineer.

B. The work of this Section includes, but is not limited to, the following:

1. Crossing and Relocating Existing Utilities
2. Restoring Driveways, Fences and Curbing
3. Cleaning Up
4. Incidental Work
5. Restoring Easements and Rights-of-Way

G8.04 CROSSING AND RELOCATING EXISTING UTILITIES

A. This item includes any extra work required in crossing culverts, water courses including streams and drainage ditches, drains, gas mains, water mains and water services and other utilities. This work shall include but is not limited to the following: bracing, hand excavation and backfill (except screened gravel) and any other work required for crossing the utility or obstruction not included for payment in other items of this specification. Notification of Utility Companies shall be the Contractor's responsibility.

B. In locations where existing utilities cannot be crossed without interfering with the construction of the work as shown on the Plans, the Contractor shall remove and relocate the utility as directed by the Engineer or Representative of the City or cooperate with the Utility Companies concerned if they relocate their own utility.

C. At pipe crossings and where designated by the Plans, the Contractor shall furnish and place crushed stone bedding so that the existing utility or pipe is firmly supported for its entire exposed length. The bedding shall extend to the mid-diameter of the pipe crossed.

G8.05 RESTORING OF DRIVEWAYS AND FENCES

A. Existing public and private driveways disturbed by the construction shall be replaced. Paved drives shall be repaved to the limits and thicknesses existing prior to construction. Gravel dirt roads and drives shall be replaced and regraded.

B. Fences in the vicinity of the work shall be protected from damage. If damaged, fences shall be replaced in condition equal to that prior to being damaged and the work shall be satisfactory to the City.

G8.06 CLEANING UP

A. The Contractor shall remove all construction material, excess excavation, buildings, equipment and other debris remaining on the job as a result of construction operations and shall restore the site of the work to a neat and orderly condition. All stored materials shall be kept in a neat manner, secured and protected from the public.

G8.07 INCIDENTAL WORK

A. Do all incidental work not otherwise specified, but obviously necessary to the proper completion of the Contract as specified and as shown on the Plans.

G8.08 RESTORING THE EASEMENTS AND RIGHTS-OF-WAY

A. Portions of the work may be within easements through private property. The Contractor shall be responsible for all damage to private property due to his/her operations. The Contractor shall protect from injury all walls, fences, cultivated shrubbery and vegetables, fruit trees, pavement, underground facilities, such as water pipes, or other utilities which may be encountered along the easement. If removal and replacement are required, it shall be done in a workmanlike manner so that replacement is equivalent to that which existed prior to construction.

B. Existing lawn and sod surfaces damaged by construction in easements shall be replaced. The Contractor may cut and replace the lawn and sod, or may restore the areas with an equivalent depth and quality of loam, seeded and fertilized as specified in Section G7- LOAMING, HYDROSEEDING AND PERMANENT EROSION CONTROL if acceptable to the owner of the private property and the City. These areas shall be maintained and re-seeded or re-sodded at the option of the owner of the private property and the City, if necessary, until all work under this Contract has been completed and accepted. Any additional work required to restore easements to their original condition shall be performed by the Contractor.

G8.09 PAYMENT

A. No separate payment shall be made for work performed in accordance with this section of the specifications, and the cost thereof shall be included in the proper items of the Proposal and Bid Schedule.

END OF SECTION

TECHNICAL SPECIFICATIONS

SECTION CIP4 – SITE CONDITIONS

CIP4.01 SCOPE OF WORK

A. This specification covers the requirements for investigation and verification of site conditions for the Project.

CIP4.02 SUBSURFACE INFORMATION

A. No subsurface investigations have been made by the City. The ~~Bidder~~ / Contractor shall be responsible for any subsurface explorations and tests deemed necessary.

B. No test borings have been made by the City to indicate subsurface materials.

CIP4.03 SITE INVESTIGATION AND REPRESENTATION

A. The ~~Bidder /~~ Contractor acknowledges that he has satisfied himself as to the nature and location of the work; the general and local conditions, particularly those bearing upon availability of transportation, disposal, handling and storage of materials, availability of labor, water, electric power, roads, and uncertainties of weather, river/stream stages, or similar physical conditions at the site; the conformation and conditions of the ground; the character of equipment and facilities needed preliminary to and during the prosecution of the work and all other matters which can in any way affect the work or the cost thereof under this Contract.

B. The Contractor further acknowledges that he has satisfied himself as to the character, quality, and quantity of surface and subsurface materials to be encountered from inspecting the site and from evaluating information derived from exploratory work, if any, that has been done by the City as presented in the geotechnical report, as well as from information presented herein as a part of these Contract Documents. Any failure by the Contractor to acquaint himself with all the available information will not relieve him from responsibility for properly estimating the difficulty or cost of successfully performing the work. Neither the City nor the Engineer assume responsibility for any conclusion or interpretation made by the Contractor on the basis of the information made available by the City or the Engineer.

C. Existing ground profiles shown on the Plans were plotted from field surveys.

CIP4.04 RESPONSIBILITY FOR UTILITY PROPERTIES AND SERVICE

A. Known utilities and structures adjacent to or encountered in the work are shown on the Plans. The locations shown are taken from existing records and the best information available from existing plans; however, it is expected that there may be some discrepancies and omissions in the locations and quantities of utilities and structures shown. Those shown are for the convenience of the Contractor only, and no responsibility is assumed by either the City or the Engineer for their accuracy or completeness.

B. Neither the City nor its officers or agents shall be responsible to the Contractor for damages as a result of the Contractor's failure to protect utilities encountered in the work.

C. The Contractor shall at all times provide unobstructed access to fire hydrants and structures as per Fire Code, underground conduit, manholes, and water or gas valve boxes.

D. Where the Contractor's operations could cause damage which might result in considerable expense, loss, or inconvenience when his operations are adjacent to or near railway, telegraph, telephone, television, power, oil, gas, water, sewer, irrigation, or other systems, no operations shall be commenced until the Contractor has made all arrangements necessary for the protection of these utilities and services.

E. The Contractor shall notify all utility offices that are affected by the construction operation at least 15 days in advance of commencing construction operations. The Contractor shall not expose any utility without first obtaining permission from the affected agency. Once permission has been granted, locate and, if necessary, expose and provide temporary support for all existing underground utilities in advance

of operations.

F. The Contractor shall be solely and directly responsible to the City and operators of such utility properties for any damage, injury, expense, loss, inconvenience, delay, suits, actions, or claims of any character brought because of any injuries or damage that may result from the construction operations under this Contract.

G. In the event of interruption to domestic water, sewer, storm drain, or other utility services as a result of accidental breakage due to construction operations, the Contractor shall promptly notify the proper authority and cooperate with said authority in restoration of service as promptly as possible and bear all costs of repair.

H. The Contractor shall replace, at his own expense, any and all other existing utilities or structures removed or damaged during construction, unless otherwise provided for in these Contract Documents.

I. Where existing utility lines or structures are so located as to physically conflict with permanent structures to be constructed under this Contract, the conflicting utility line or structure shall be permanently relocated.

J. The Contractor shall give immediate notice to the Engineer, the City and the owner of the utility (where applicable) when a physical conflict is determined to exist.

1. Contractor will not be charged contract time for delays caused by unanticipated conflicts.

2. Contractor shall not charge the City of Georgetown for lost time or down time for unanticipated conflicts.

K. Where existing utility lines or structures are so located as to interfere with the Contractor's prosecution of the work, but do not physically conflict with completed manholes or other permanent structures to be constructed under this Contract, any modification, alteration, or relocation of interfering utility, either permanent or temporary, shall be accomplished at the expense of the Contractor.

CIP4.05 INTERFERING STRUCTURES

A. Take necessary precautions to prevent damage to existing structures whether on the surface, aboveground, or underground. An attempt has been made to show major structures on the Plans. While theinformation has been compiled from the best available sources, it's completeness and accuracy cannot be guaranteed, and it is presented as a guide to avoid known possible difficulties.

B. Protect existing structures from damage, whether or not they lie within the right-of-way or the limits of the easements obtained by the City. Where existing structures must be removed to properly carry out the work, or are damaged during the work, they shall be restored at the Contractor's own expense to at least their original condition and to the satisfaction of the Engineer.

C. The Contractor may, with the approval of the Engineer and without additional compensation, remove and replace in a condition as good as or better than original, any small interfering structures such as fences and signposts that interfere with the Contractor's operations.

CIP4.06 FIELD RELOCATION

A. During the progress of the work, minor relocations of the work may be necessary. Such relocations shall be made only by direction of the Engineer or the City. If existing structures are encountered that will prevent construction as shown, notify the Engineer before continuing with the work in order that the Engineer may make such field revisions as necessary to avoid conflict with the existing structures. If the Contractor fails to notify the Engineer when an existing structure is encountered and proceeds with the work despite this interference, he shall be responsible for any damage that may occur.

CIP4.07 LAND MONUMENTS

A. The Contractor shall preserve or replace any existing Federal, State, County, City, and private land monuments encountered.

B. Any damaged or destroyed monuments shall be replaced at the sole expense of the Contractor as designated by the controlling authority of the Entity.

CIP4.08 PAYMENT

A. No separate payment will be made for work performed in accordance with this section of the specifications, and the cost thereof shall be included in the appropriate items of the Proposal and Bid Schedule.

END OF SECTION

TECHNICAL SPECIFICATIONS

SECTION CIP6 – CONTROL OF WORK

CIP6.01 SCOPE OF WORK

A. This specification covers the requirements for exercising control of work performed on the Project.

CIP6.02 AUTHORITY OF ENGINEER OR INSPECTOR

A. The work will be done in accordance with the Contract, Plans and Specifications. The Engineer or Inspector will decide all questions which may arise as to the quality or acceptability of materials furnished and work performed and the interpretations of the Plans and Specifications. His decisions will be final, and he will have executive authority to enforce and make effective such decisions and orders.

CIP6.03 CONFORMITY WITH PLANS, SPECIFICATIONS AND SPECIAL PROVISIONS

A. All work performed and all materials furnished shall be in reasonable close conformity with the lines, grades, cross sections, dimensions, details, gradations, physical and chemical characteristics of materials in accordance with tolerances shown on the Plans or indicated in the Specifications and Special Provisions. The limits establishing reasonable close conformity will be as defined in these items of the contract.

B. In the event the City finds that the work performed or the materials used are not within reasonable close conformity with the Plans, Specifications and Special Provisions, the affected material or product shall be removed and replaced or otherwise satisfactorily corrected by and at the expense of the Contractor.

C. Deviations from the Plans and approved working drawings as may be required will in all cases be determined by the City and authorized in writing. Before final acceptance of the project is issued by the City, the Contractor shall provide the City with a set of record drawings for the project certified by the Engineer of record.

CIP6.04 COORDINATION OF PLANS, SPECIFICATIONS AND SPECIAL PROVISIONS

A. The Specifications, the accompanying Plans, Special Provisions, and Supplemental Agreements, are essential parts of the Contract, and a requirement occurring in one is as binding as though occurring in all. They are intended to be co-operative and to describe and provide for a complete work. In cases of disagreement, figured dimensions shall govern over scaled dimensions, the Plans shall govern over Specifications, and Special Provisions shall govern over both Specifications and Plans.

CIP6.05 AUTHORITY AND DUTIES OF INSPECTORS

A. Inspectors will be authorized to inspect all work done and all materials furnished. Such inspection may extend to all or to any part of the work and to the preparation or Manufacturer of the materials to be used. Such inspection will not relieve the Contractor from any obligation to perform the work in accordance with the requirements of the Specifications. In case of any dispute arising between the Contractor and the Inspector as to materials furnished or the manner of performing the work, the Inspector will have authority to reject materials or suspend work until the question at issue can be referred to and decided by the City. The Inspector will not be authorized to revoke, alter, enlarge, or release any requirement of these Specifications, nor to approve or accept any portion of work, nor to issue instruction contrary to the Plans and Specifications. He will in no case act as foreman or perform other duties for the Contractor nor interfere with the management of the work.

CIP6.06 PLANT

A. The Contractor shall furnish plant and equipment which will be efficient, appropriate and large enough to secure a satisfactory quality of work and a rate of progress which will insure the completion of the work within the time stipulated in the Proposal. If at any time such plant appears to the Engineer to be inefficient, inappropriate or insufficient for securing the quality of work required or for producing the rate of progress aforesaid, he may order the Contractor to increase the efficiency, change the character or increase the plant and equipment, and the Contractor shall conform to such order. Failure of the Engineer to give such order shall in no way relieve the Contractor of his obligations to secure the quality of work and rate of progress required.

CIP6.07 PRIVATE LAND

A. The Contractor shall not enter or occupy private land outside of easements, except by written permission of the respective landowner.

CIP6.08 PIPE LOCATIONS

A. Pipelines shall be located substantially as indicated on the Plans, but the Engineer and the City reserve the right to make such modifications in locations as may be found desirable to avoid interference with existing structures or for other reasons. Where fittings are noted on the Plans, such notation is for the Contractor's convenience and does not relieve him from laying and jointing different or additional items where required.

CIP6.09 OPEN EXCAVATIONS

A. All open excavations shall be adequately safeguarded by providing temporary barricades, caution signs, lights and other means to prevent accidents to persons, and damage to property. The Contractor shall, at his own expense, provide suitable and safe bridges and other crossings for accommodating travel by pedestrians and workmen. Bridges provided for access during construction shall be removed when no longer required. The length or size of excavation will be controlled by the particular surrounding conditions, but shall always be confined to the limits prescribed by the Engineer. If the excavation becomes a hazard, or if it excessively restricts traffic at any point, the Engineer may require special construction procedures such as limiting the length of the open trench, prohibiting stacking excavated material in the street, and requiring that the trench shall not remain open overnight. The Contractor shall take precautions, such as fences and barricades, to prevent injury to the public due to open trenches. All trenches, excavated material, equipment, or other obstacles, which could be dangerous to the public, shall be well lighted at night. All trenches shall conform to the requirements of OSHA.

CIP6.10 TEST PITS

A. Test pits for the purpose of locating underground pipelines or structures in advance of the construction shall be excavated and backfilled by the Contractor at the direction of the Engineer or the City. Test pits shall be backfilled immediately after their purpose has been satisfied and the surface restored and maintained in a manner satisfactory to the Engineer and the City.

CIP6.11 MAINTENANCE OF TRAFFIC

A. Unless permission to close a street is received in writing from the proper authority, all excavated material shall be placed so that vehicular and pedestrian traffic may be maintained at all times. If the Contractor's operations cause traffic hazards, he shall repair the road surface, provide temporary ways, erect wheel guards or fences, or take other measures for safety satisfactory to the Engineer and the City.

B. Detours around construction will be subject to the approval of the City and the Engineer. Where detours are permitted, the Contractor shall provide all necessary barricades and signs as required to divert the flow of traffic. While traffic is detoured, the Contractor shall expedite construction operations and periods when traffic is being detoured will be strictly controlled by the City.

C. The Contractor shall take precautions to prevent injury to the public due to open trenches. Nightwatchmen may be required where special hazards exist, or police protection provided for traffic while work is in

progress. The Contractor shall be fully responsible for damage or injuries whether or not police protection has been provided.

CIP6.12 BLASTING

A. No blasting shall be allowed unless approved in writing by the City of Georgetown.

CIP6.13 CARE AND PROTECTION OF PROPERTY

A. The Contractor shall be responsible for the preservation of all public and private property, and shall use every precaution necessary to prevent damage thereto. If any direct or indirect damage is done to public or private property by or on account of any act, omission, neglect, or misconduct in the execution of the work on the part of the Contractor, such property shall be restored by the Contractor, at his expense, to a condition equal or better than existing before the damage was done, or he shall make good the damage in some other manner acceptable to the Engineer and the City.

CIP6.14 MAINTENANCE OF FLOW

A. The Contractor shall, at his own cost, provide for the flow of sewers, drains and water courses interrupted during the progress of the work, and shall immediately cart away and remove all offensive matter. The entire procedure of maintaining existing flow shall be fully discussed with the Engineer and the City well in advance of the interruption ofany flow.

CIP6.15 COOPERATION WITHIN THIS CONTRACT

A. The Contractor shall cooperate with Subcontractors or trades, and shall assist in incorporating the work of other trades where necessary or required.

B. Cutting and patching, drilling and fitting shall be carried out where required by the Contractor and his Subcontractor having jurisdiction, unless otherwise indicated herein or directed by the Engineer or the City.

CIP6.16 CLEANUP

A. During the course of the work, the Contractor shall keep the site of his operations in as clean and neat a condition as is possible. The Contractor shall dispose of all rubbish resulting from the construction work and, at the conclusion of the work, he shall remove and haul away any surplus excavation, broken pavement, lumber, equipment, temporary structures, and any other refuse remaining from the construction operations, and shall leave the entire site of the work in a neat and orderly condition.

CIP6.17 FINAL INSPECTION

A. Whenever the work provided for in, and contemplated under, the contract has been satisfactorily completed, the City will make the “Final Inspection”. If the work is found to be satisfactory, the Contractor will be notified in writing of the acceptance of the same. The City will require a Certificate of Completion and Final Acceptance from the Inspector before any building, electric or plumbing permits will be issued or any City utilities provided. No such Certificate will be issued until all monuments have been set and record drawing reviewed by the Engineer of Record are provided to the City. If items are found in need of repair or completion, a final punch list will be generated and the items shall be completed by the Contractor. The City will inspect the punch list items one time following their completion. Any subsequent inspections due to inadequate repair or completion of the punch list items shall be paid for by the Contractor or Developer at $200.00 per inspection.

B. Final acceptance of the Project or Development does not relieve the Contractor or Developer of the responsibility of insuring all work shown on the Plans has been completed. If any portion of the work is found at a later date to be inferior or incomplete, the Contractor or Developer shall replace or complete the work at no expense to the City.

CIP6.18 PAYMENT

A. No separate payment will be made for work performed in accordance with this section of the specifications, and the cost thereof shall be included in the appropriate items of the Proposal and Bid Schedule.

END OF SECTION

TECHNICAL SPECIFICATIONS

SECTION CIP7 – CONTROL OF MATERIALS

CIP7.01 SCOPE OF WORK

A. This specification covers the requirements for exercising control of materials used on the Project.

CIP7.02 SOURCES OF SUPPLY AND QUALITY OF MATERIALS

A. The source of supply of each of the materials shall be approved by the City before any deliveries and at the option of the City, may be sampled and tested for determining compliance with the governing Specifications by the City before delivery begins. If it is found after trial that sources of supply previously approved do not produce uniform and satisfactory products, or if the product from any source proves unacceptable at any time, the Contractor shall furnish materials from other approved sources. Only materials conforming to the requirements of these Specifications and approved by the City shall be used in the work. All materials being used are subject to inspection or test at any time during their preparation or use. Any materials which have been tested and accepted at the source of supply may be subjected to a check test after delivery and all materials which, when retested, do not meet approval or have in any way become unfit for use shall not be used in the work.

B. Throughout these Specifications where reference is made to ASTM, AASHTO or bulletins of the Texas Department of Transportation for the quality of materials or sampling and testing, the most current standard, tentative standard or bulletin issued prior to the date of the proposal shall govern.

CIP7.03 SAMPLES AND TEST

A. All materials, before being incorporated in the work, shall be inspected, tested and approved by the City and any work in which materials are used without prior test and approval or written permission of the City may be ordered removed and replaced at the Contractor's expense. The Contractor shall be responsible for and pay for all charges of testing laboratories for services in conjunction with initial tests made on all imported materials to the project site including but not limited to embedment materials, fill materials, backfill materials, select material, crushed limestone base, sub-base, concrete, steel, wood forms, liquid asphalt, aggregate, water, cement, guard rail etc. Sampling and testing of all materials, on the project site will be coordinated by the Contractor and paid for by the City. The selection of the method of test shall be designated by the City. Where tests are required, other than those made in the laboratory, for the purpose of control in the manufacture of a construction item, the Contractor will be required to furnish such facilities and equipment as may be necessary to perform the tests and inspection and shall be responsible for calibration of all test equipment required. When requested, the Contractor shall furnish a complete written statement of the origin, composition, and/or manufacture of any or all materials that are to be used in the work. Testing of all materials and work shall conform to the Texas Department of Transportation "Manual of Testing Procedures" which outlines testing methods and procedures. Other Texas Department of Transportation Bulletins shall apply.

CIP7.04 PAYMENT

A. No separate payment will be made for work performed under this section of the specifications, and the cost thereof shall be included in the appropriate items of the Proposal and Bid Schedule.

END OF SECTION

TECHNICAL SPECIFICATIONS

SECTION WW1 – CONCRETE MANHOLES (WASTEWATER)

WW1.01 SCOPE OF WORK

A. This specification covers the requirements to install precast concrete manholes, frames and covers, and appurtenances as shown on the Plans and as specified herein.

WW1.02 SUBMITTALS

A. Within 30 days after the Notice to Proceed, the Contractor shall submit to the Engineer or the City for approval, shop drawings, product data, materials of construction, and details of installation shall be submitted in accordance with Section 013360 SUBMITTAL PROCEDURES. Submittals shall include the following: base sections, riser sections, eccentric conical top sections, flat slab tops, grade rings with notarized certificate indicating compliance with ASTM C478, pipe connection to manhole, manhole frame and cover with notarized certificate indicating compliance with ASTM A48, Class 30, method of repair for
minor damage to precast concrete sections, manhole lining system.

B. Design Data

1. Precast concrete structures:

a. Six (6) copies of sectional plan(s) and elevations showing dimensions and reinforcing steel placement.

b. Six (6) copies of concrete design mix.

C. Test Reports

1. Precast concrete structures:

a. Six (6) copies of concrete test cylinder reports from an approved testing laboratory certifying conformance with specifications.

WW1.03 REFERENCE STANDARDS

A. American Society for Testing and Materials (ASTM)

1. ASTM A48 - Specification for Gray Iron Castings.

2. ASTM A615 - Standard Specification for Deformed and Plain Billet-Steel Bars for Concrete Reinforcement.

3. ASTM C33 - Specification for Concrete Aggregates.

4. ASTM C150 - Standard Specification for Portland Cement.

5. ASTM C478 - Standard Specification for Precast Reinforced Concrete Manhole Sections.

6. ASTM D4101 - Specification for Propylene Plastic Injection and Extrusion Materials.

B. American Concrete Institute (ACI)

1. ACI 318 - Building Code Requirements for Reinforced Concrete.

2. ACI 350R - Concrete Sanitary Engineering Structures.

C. American Association of State Highway and Transportation Officials (AASHTO)

1. Standard Specifications for Highway, Streets and Bridges.

D. Occupational Safety and Health Administration (OSHA)

E. Where reference is made to one of the above standards, the revision in effect at the time of bid opening shall apply.

WW1.04 QUALITY ASSURANCE

A. All material shall be new and unused.

B. Materials' quality, manufacturing process and finished sections are subject to inspection and approval by Engineer or other City representative. Inspection may be made at place of Manufacture, at work site following delivery, or both.

C. Materials will be examined for compliance with ASTM specifications, these Specifications and approved Manufacturer's drawings. Additional inspection criteria shall include: appearance, dimensions(s), blisters, cracks and soundness.

D. Materials shall be rejected for failure to meet any Specification requirement. Rejection may occur at place of manufacture, at work site, or following installation. Mark for identification rejected materials and remove from work site immediately. Rejected materials shall be replaced at no cost to City.

E. Repair minor damage to precast concrete sections by approved method, if repair is authorized by Engineer or the City.

WW1.05 PRODUCTS

A. Reference to a Manufacturer's name and model or catalog number is for the purpose of establishing the standard of quality and general configuration desired.

B. Like items of materials/equipment shall be the end products of one Manufacturer in order to provide standardization for appearance, operation, maintenance, spare parts and Manufacturer's service.

C. Provide lifting lugs or holes in each precast section for proper handling.

WW1.06 PRECAST CONCRETE MANHOLE SECTIONS

A. Precast concrete base sections, riser sections, transition top sections, flat slab tops and grade rings shall conform to ASTM C478 and meet the following requirements:

1. Bottom slab thickness shall be 12-inches.

2. Top section shall be flat slab with a minimum clear opening of $32\ ^{7}/_{8}$-inches diameter.

3. Base, riser and transition top sections shall have tongue and groove joints.

4. Sections shall be cured by an approved method.

5. Precast concrete sections shall be shipped after concrete has attained 3,000 psi compressive strength.

6. Design precast concrete base, riser, transition top, flat slab top and grade ring for a minimum HS-20 loading plus earth load. Calculate earth load with a unit weight of 130 pounds per cubic foot.

7. Mark date of manufacture, name and trademark of Manufacturer on the inside of each precast section.

8. Construct and install precast concrete base as shown on the Plans.

9. Provide integrally cast knock-out panels in precast concrete manhole sections at locations, and with sizes shown on Plans. Knock-out panels shall have no steel reinforcing.

B. Manhole diameter shall be as shown on the Plans, but not less than the diameter of the largest connecting pipe plus two (2) feet.

C. Pipe Sections

Pipe sections shall conform to current specifications for Precast Reinforced Manhole Sections, ASTM Designation C478, with the following additions:

1. Pipe shall be machine made by a process which will provide for uniform placement of zero slump concrete in the form and compaction by mechanical devices which will assure a dense concrete in the finished product.

2. Aggregates for the concrete shall consist of limestone aggregates in the proportion of at least 75% by weight of the total aggregates.

3. Minimum wall thickness for the manhole risers shall be as listed under Wall "B" in the "Class Tables" of ASTM C76 for Class III pipe.

D. Joints

1. Joints shall conform to the joint specifications in ASTM C478, C76, and ASTM C443. All manhole sections, including the bottom section, shall be furnished with "O-ring" type rubber gasket joints. The joints shall be furnished and installed with the bell down to resist groundwater infiltration. All joints shall be sealed with mortar or an approved non-shrink grout on the inside and the outside of the manhole. Grade rings shall be mortared to each other and on the inside and outside to provide a waterproof seal.

E. Manhole Steps

1. Unless specifically approved by the City, manhole steps shall not be provided.

WW1.07 MANHOLE FRAME AND COVER

A. Manhole frames and covers shall be of good quality, strong, tough, even grained cast iron, smooth, free from scale, lumps, blisters, sand holes and defects of any kind which render them unfit for the service for which they are intended. Manhole covers and frame seats shall be machined to a true surface. Castings shall be thoroughly cleaned and subject to hammer inspection. Cast iron shall conform to ASTM A48, Class 30.

B. Manhole covers shall have a diamond pattern, pick holes and the word SEWER as appropriate cast in three (3) inch letters. Manhole frame and covers shall be Neenah Foundry, Western Iron Works, Vulcan Foundry, or equal. Model numbers refer to Western Iron works products:

1. Manhole Frame and cover - WRM-36.

WW1.08 JOINTING PRECAST MANHOLE SECTIONS

A. Seal tongue and groove joints of precast manhole sections with rubber "O"-ring gasket. O-ring gasket shall conform to ASTM C443.

B. Completed joint shall withstand 15 psi internal water pressure without leakage or displacement of gasket or sealant.

WW1.09 PIPE CONNECTIONS TO MANHOLE

A. Connect pipe to manhole in the following ways:

1. Flexible sleeve - Integrally cast sleeve in precast manhole section or install sleeve in a formed or cored opening. Fasten pipe in sleeve with stainless steel clamp(s). Coat stainless steel clamp(s) with bituminous material to protect from corrosion. Flexible sleeve shall be Lock Joint Flexible Manhole Sleeve; Kor-N-Seal connector; PSX Press-Seal Gasket or equal.

2. Compression gasket - Integrally cast compression gasket in precast manhole section. Insert pipe into compression gasket. Compression gasket shall be A-Lok, or equal.

WW1.10 INSTALLATION

A. Manhole Installation

1. Manholes shall be constructed to the dimensions shown on the Plans and as specified herein. Protect all work against flooding and flotation.

2. Place manhole base on a bed of screened gravel eight (8) inches in depth as shown on the Plans. Set manhole base so that a maximum grade adjustment of eight (8) inches is required to bring the manhole frame and cover to final grade.

Use precast concrete grade rings to adjust manhole frame and cover to final grade.

3. Set precast concrete barrel sections plumb with a $^{1}/_{4}$-inch maximum out of plumb tolerance allowed. Seal joints of precast barrel sections with either a rubber "O" ring set in a recess or preformed flexible joint sealant in sufficient quantity to fill 75 percent of the joint cavity. Fill the outside and inside joint with non-shrink mortar and finished flush with the adjoining surfaces. Caulk the inside of any leaking barrel section joint with non-shrink grout to the satisfaction of the Engineer and the City.

4. Allow joints to set for 14 hours before backfilling unless a shorter period is specifically approved by the Engineer or the City.

5. Plug holes in the concrete barrel sections required for handling with a non-shrinking grout or non-shrinking grout in combination with concrete plugs. Finish flush on the inside.

6. Core holes in precast sections to accommodate pipes prior to setting manhole sections in place to prevent jarring which may loosen the mortar joints.

7. Backfill carefully and evenly around manhole sections.

B. Manhole Pipe Connections

1. Construct manhole pipe connections, including pipe stubs, as specified above. Close or seal pipe stubs for future connections with a gasketed watertight plug.

C. Setting Manhole Frame and Cover

1. Set manhole covers and frames in a full mortar bed. Utilize precast concrete grade rings, for a maximum adjustment of twelve (12) inches, to assure frame and cover are set to the finished grade. Set manhole frame and cover to final grade prior to placement of permanent paving.

WW1.11 TESTS

A. Test each manhole in accordance with Section CIP12- TESTING OF PIPELINES AND MANHOLES. Engineer or the City's representative shall observe each test.

WW1.12 CLEANING

A. Thoroughly clean all new manholes of all silt, debris and foreign matter of any kind, prior to final inspections.

WW1.13 PAYMENT

A. Payment for furnished and installed manholes shall be paid according to the unit price per each in the proper item of the Proposal and Bid Schedule.

B. All work and materials to complete the reinforced concrete pipe including but not limited to excavation, bedding, backfill, connection to pipe, etc. shall be subsidiary to this item.

END OF SECTION

TECHNICAL SPECIFICATIONS

SECTION WW2 – POLYVINYL CHLORIDE (PVC) PIPE-WASTEWATER

WW2.01 SCOPE OF WORK

A. This specification covers the requirements to install and test polyvinyl chloride (PVC) pipe and fittings, including excavation, sheeting, storing, dewatering, pipe laying, jointing, testing, backfilling, and any other work that is required or necessary to complete the installation as shown in the Plans as specified herein, complete as shown on the Plans and as specified herein.

WW2.02 SUBMITTALS

A. Within 30 days of the Notice to Proceed, the Contractor shall submit to the Engineer or the City for approval, technical product literature including the names of the pipe and fittings suppliers, a list of materials to be furnished, shop drawings on required pipes and fittings, certified test reports that the pipe for this Contract was manufactured and tested in accordance with the ASTM Standards specified herein, and all other pertinent data to illustrate conformance to the specification found within.

WW2.03 QUALITY ASSURANCE

A. All PVC pipe and fittings shall be from a single Manufacturer. The Supplier shall be responsible for the provisions of all test requirements specified in ASTM D3034 or ASTM F789 as applicable. In addition, all PVC pipe to be installed under this Contract may be inspected at the plant for compliance with these specifications by an independent testing laboratory provided by the City. The Contractor shall require the Manufacturer's cooperation in these inspections. The cost of plant inspection of all pipe approved for this Contract, plus the cost of inspection of disapproved pipe, will be borne by the Contractor.

B. Inspections of the pipe may also be made by the Engineer or other representatives of the City after delivery. The pipe shall be subject to rejection at any time on account of failure to meet any of the Specification requirements, even though sample pipes may have been accepted as satisfactory at the place of manufacture. Pipe rejected after delivery shall be marked for identification and shall be removed from the job at once.

WW2.04 POLYVINYL CHLORIDE (PVC) WASTEWATER PIPE AND FITTINGS

A. Pipe and fittings shall be Type PSM, PVC SDR 26 with full diameter dimensions and shall conform to ASTM D3034, or Type PS-46 PVC conforming to ASTM F789, for sizes 4 through 15-inch and shall conform to ASTM F679 for sizes 18 through 27-inch. Straight pipe shall be furnished in lengths of not more than 13-feet and wyes shall be furnished in lengths of not more than three (3) feet. Saddle wyeswill not be allowed.

B. PVC pipe and fittings shall have bell and spigot push-on joints. The bell shall consist of an integral wall section with a solid cross-section elastomeric gasket securely locked in place to prevent displacement during assembly. Elastomeric gaskets shall conform to ASTM F477.

C. All fittings and accessories shall have bell and/or spigot configurations compatible with the pipe.

D. ~~For Force Main, all pipe shall be C-900, DR-18 pipe or epoxy coated ductile iron encased with brown8 mil. polyethylene film.~~

WW2.05 HANDLING AND CUTTING PIPE

A. Pipe and fittings are slightly brittle. Care shall be taken in shipping, handling and laying to avoid damaging the pipe and fittings. Extra care will be necessary during cold weather construction.

B. Any pipe or fitting showing a crack or which has received a blow that may have caused an incipient fracture, even though no such fracture can be seen, shall be marked as rejected and removed at once from the work.

C. All pipe ends shall be square after cutting.

D. While stored, pipe shall be adequately supported from below at not more than three (3) foot intervals to prevent deformation. Pipe shall not be stacked higher than six (6) feet. Pipe and fittings shall be stored in a manner which will keep them at ambient outdoor temperatures and out of direct sunlight. Temporary shading as required to meet this requirement shall be provided. Simple covering of the pipe and fittings which allows temperature buildup when exposed to direct sunlight will not be permitted.

WW2.06 JOINTING POLYVINYL CHLORIDE (PVC) WASTEWATER PIPE AND FITTINGS

A. PVC wastewater pipe and fittings shall be jointed in accordance with the recommendations of the latest ASTM Standards and detailed instructions of the Manufacturer.

B. All manhole connections shall be as shown on the Plans.

WW2.07 INSTALLING POLYVINYL CHLORIDE (PVC) PIPE AND FITTINGS

A. No single piece of pipe shall be laid unless it is generally straight. The centerline of the pipe shall not deviate from a straight line drawn between the centers of the openings at the ends of the pipe by more than $^{1}/_{16}$-inch per foot of length. If a piece of pipe fails to meet this requirement check for straightness, it shall be rejected and removed from the site. Laying instructions of the Manufacturer shall be explicitly followed.

B. Any pipe or fittings discovered to be defective after laying shall be removed and replaced with a sound piece.

C. The Engineer or the City may examine each bell and spigot end to determine whether any preformed joint has been damaged prior to installation. Any pipe having defective joint surfaces shall be rejected, marked as such, and immediately removed from the job site.

D. All pipe shall be sound and clean before laying. When laying is not in progress, including lunch time, the open ends of the pipe shall be closed by watertight plugs or other approved means.

E. Pipe and fittings shall be installed in accordance with the instructions of the Manufacturer, ASTMD2321 and as specified herein. As soon as the excavation is complete to normal grade of the bottom of the trench, bedding shall be placed, compacted and graded to provide firm, uniform and continuous support for the pipe. Bell holes shall be excavated so that only the barrel of the pipe bears upon the bedding. The pipe shall be laid accurately to the lines and grades indicated on the Plans. The specified embedment shall be accurately shaped and trimmed to receive the pipe barrel and each pipe section, when in place, shall have a uniform bearing on the subgrade for the full length of the pipe barrel. Pipe shall not be laid unless the subgrade is free of water and in a satisfactory condition. Adjustments of the pipe to line and grade shall be made by scraping away or filling in with granular material, and not by wedging or blocking up the bell. Blocking under the pipe will not be permitted. The bedding as shown in the details of the Plans, shall be placed evenly on each side of the pipe to mid-diameter and hand tools shall be used to force the bedding under the haunches of the pipe and into the bell holes to give firm continuous support for the pipe. The bedding shall then be placed to 12-inches above the top of the pipe. The initial three (3) feet of backfill above the bedding backfill shall be placed in eight (8) inch layers and carefully compacted. Generally, the compaction shall be done evenly on each side of the pipe and compaction equipment shall not be operated directly over the pipe until sufficient backfill has been placed to ensure that such compaction equipment will not have a damaging effect on the pipe. Equipment used in compacting the initial three (3) feet of backfill shall be approved by the pipe Manufacturer's representative prior to use.

F. Joints shall not be "pulled" or "cramped". Each joint of pipe shall be completed in compliance with Manufacturer's recommendations.

G. Before any joint is made, the pipe shall be checked to assure that a close joint with the next adjoining pipe has been maintained and that the inverts are matched and conform to the required grade. The pipe shall not be driven down to grade by striking it.

H. Precautions shall be taken to prevent flotation of the pipe in the trench.

I. When moveable trench bracing such as trench boxes, moveable sheeting, shoring or plates are used to support the sides of the trench, care shall be taken in placing and moving the boxes or supporting bracing to prevent movement of the pipe, or disturbance of the pipe bedding and the backfill. Trench boxes, moveable sheeting, shoring or plates shall not be allowed to extend below mid-diameter of the pipe. As trench boxes, moveable sheeting, shoring or plates are moved, screened material shall be placed to fill any voids created and the screened material and backfill shall be re-compacted to provide uniform side support for the pipe.

J. Pipe stubs for manhole connections shall not exceed 3.25-feet in length unless directed otherwise by the Engineer or the City. Install caps where required. When connecting to an existing manhole, the opening for the connection of the wastewater pipe and the manhole shall be cored using an approved coring machine to the dimensions and size required to install the flexible "SEAL BOOT" resilient connector that meets the requirements of ASTM C-923. The connection shall be watertight when complete and meet the requirements of Section WW1- CONCRETE MANHOLES.

K. Wastewater mains shall be installed in straight trenches from manhole to manhole or manhole to cleanout. There will be no curvilinear installations of wastewater mains.

WW2.08 TESTING

A. Testing and cleaning of pipe shall be as specified in Specification Section CIP12- TESTING OF PIPELINES AND MANHOLES.

WW2.09 PAYMENT

A. The wastewater line, complete in place, will be measured for payment in linear feet along the centerline of the pipe actually installed. Measurement shall be through all manholes and no deduction in length will be made for such appurtenances. Installation of the wastewater line will be paid for at the unit contract price per linear foot as provided in the Proposal and Bid Schedule.

B. Payment of the unit contract price for the items of work performed shall be the total compensation for furnishing all labor, materials, tools, testing equipment and incidentals and performing all work that is necessary for the installation of the pipe, fittings, embedment or encasement, and all other appurtenances in accordance with the Plans and the provisions of these specifications.

END OF SECTION

TECHNICAL SPECIFICATIONS

SECTION WW3 – CONNECTIONS TO AND WORK ON THE EXISTING WASTEWATER SYSTEM

WW3.01 SCOPE OF WORK

A. This specification covers the requirements to maintain flow in existing sewers, handle existing wastewater flow, construct and maintain all temporary connections and diversions and construct the permanent connections to the new system as shown on the Plans and as directed by the Engineer.

WW3.02 SUBMITTALS

A. None required unless specifically called for in the Plans, details, or requested by the Engineer.

WW3.03 GENERAL

A. The Contractor shall supply all materials, equipment and labor required for plugging existing wastewater lines, all work on existing manholes (including all work and materials required to reshape existing manhole inverts with concrete and connecting new wastewater lines to existing manholes) and all additional work required.

B. Should damage of any kind occur to the existing wastewater line, the Contractor shall at his/her own expense, as part of the work under this Section, make repairs to the satisfaction of the Engineer.

C. The Contractor shall notify the Engineer immediately of any discrepancies in elevations of existing wastewater lines and manholes between those shown on the Plans and those established during construction in order that the Engineer can make the necessary modifications.

D. All new wastewater pipe for connection shall conform to the pipe specifications in Section WW2- POLYVINYL CHLORIDE (PVC) PIPE - WASTEWATER.

WW3.04 HANDLING WASTEWATER FLOWS

A. The Contractor shall provide all labor, equipment and materials necessary to maintain existing flows, including temporary diversions and all pumping of sewage that may be required to prevent backing up of wastewater lines and shall immediately remove all offensive matter at his/her own expense.

B. The Contractor shall not be permitted to overflow, bypass, pump or by any other means convey sewage to any stream, or other water course.

C. All procedures for maintaining flows must meet the approval of the Engineer and the Contractor shall be required to submit to the Engineer, for approval, a detailed written plan of all methods of flow maintenance 10 days in advance of flow interruption.

WW3.05 PAYMENT

A. No separate payment shall be made for work performed in accordance with this section of the specifications, and the cost thereof shall be included in the proper items of the Proposal and Bid Schedule.

END OF SECTION

PART 1 GENERAL

1.01 ABBREVIATIONS

A. Whenever any of the following abbreviations appear in these Specifications and Contract Documents, their meanings shall be as follows:

1. OWNER Jackson Shaw Company
2. ENGINEER Engineer of Record
3. CITY City of Georgetown
4. ASTM American Society for Testing Materials
5. AWWA American Water Works Association
6. AASHTO American Association of State Highway and Transportation Officials
7. A.C. Asbestos Cement
8. C.I. Cast Iron
9. C.S. Commercial Standards
10. D.I. Ductile Iron
11. EPA Environmental Protection Agency
12. GPM Gallons Per Minute
13. NSF National Sanitation Foundation
14. TDA Texas Department of Agriculture
15. OSHA Occupational Safety and Health Administration
16. PVC Polyvinyl Chloride
17. TCDP Texas Community Development Program
18. TCF Texas Capital Fund
19. TXDOT Texas Department of Transportation
20. TCEQ Texas Commission on Environmental Quality
21. TWDB Texas Water Development Board
22. USDA/RD United States Department of Agriculture - Rural Development

1.02 DOCUMENT ORGANIZATION

A. Section GENERAL REQUIREMENTS govern the execution of all section of the Specifications

B. Organization of Contract Documents is not intended to control or to lessen the responsibility of the CONTRACTOR in dividing work among his subcontractors or in establishing the extent of work to be performed by any trade.

C. The provided CITY specifications supersede the Special Provisions to Standard Specifications provided by Westwood Professional Services. Contractor to verify with the ENGINEER if any discrepancies.

1.03 SPECIFICATION SENTENCE STRUCTURE

A. Specifications are written in modified brief style. Requirements indicated and specified apply to all work of the same kind, class, and type even though word "all" is not stated.

B. Simple imperative mood of sentence structure is used in Specification sections which places verb as first word sentence. Where such words as "perform", "provide", "install", "erect", "furnish", "connect", "test", or words similar import are used, it shall be understood that such words include meanings of phrase "The CONTRACTOR shall..." before each word.

C. Standard paragraph titles and other identifications of subject matter in Specifications are intended as aid in locating and recognizing various requirements in the Specifications. Titles do not define, limit, or otherwise restrict Specification text. Capitalizing of words in text does not signify or mean that such words convey special or unique meanings that have precedence over other parts of the Contract Documents. Specification text shall govern over titling and shall be understood to be interpreted as a whole.

1.04 SPECIFICATION TERMINOLOGY

A. Terms such as "directed", "designated", "requested", "authorized", "approved", "selected", or words of similar value shall mean by the Engineer unless otherwise stated. Use of theseterms does not extend the 's responsibility for construction supervision or responsibilities defined in the General conditions.

B. "Required" and words of similar value mean as required to complete the work, unless otherwise stated.

C. "Perform" shall mean CONTRACTOR, at his own expense, shall perform operations necessary to complete work.

D. "Provide" shall mean CONTRACTOR, at his own expense, shall furnish and install work complete in place and ready to use.

E. "Other acceptable manufacturer", "Approved equal", or words of similar meaning shall be understood to be followed by expression "in sole opinion of the ENGINEER" even though such words may not appear in print, unless otherwise stated.

F. "Acceptance", "acceptable", or words of similar meaning shall mean acceptable to ENGINEER or Johnson County Special Utility District. Johnson County Special Utility District shall have jurisdiction and may override decisions of others.

G. "At no extra cost to Owner", "With no extra compensation to CONTRACTOR", "At CONTRACTOR's own expense", or words of similar meaning shall be understood to mean the CONTRACTOR shall perform or provide specified operation of work at no increase to CONTRACTOR Sum in the executed Contract.

H. "Indicated" refers to graphic representations, notes, or schedules on drawings, or other paragraphs or schedules in specifications, and similar requirements in Contract Documents. Where terms such as "shown", "noted", "scheduled" and "specified" are used, it is to help locate the reference; no limitation on location is intended except as specifically noted.

I. "Accepted" where used in conjunction with ENGINEER's action on CONTRACTOR submittals, and requests, is limited to responsibilities and duties of ENGINEER. Such approval does not release CONTRACTOR from responsibility to fulfill Contract Document requirements.

J. "Regulation" includes Federal, State and Local Laws, statutes, ordinances, and lawful orders issued by authorities that have jurisdiction, as well as, rules, conventions, and agreements with thin construction industry that the control performance of work, whether they are lawfully imposed by authorities having jurisdiction or not.

K. "Furnish" is used to mean to supply and deliver to project site, ready for unloading, unpacking, assembly, installation, and similar operation.

L. "Install" is used to describe operations at project site including actual unloading, unpacking, assembly, erection, placing, anchoring, applying, working to dimension, finishing, curing, protecting, cleaning, and similar operations.

M. "Installer" is an entity engaged by CONTRACTOR, either as an employee, subcontractor, or sub-subcontractor for performance of particular construction activity, including installation, erection, application, and similar operations. Installers are required to be experienced in the operations they are engaged to perform.

N. The term "experienced", when used with the term "installer", means having minimum five (5) previous projects similar in size and scope to this project, and familiar with precautions required, and has complied with requirements of authority having jurisdiction.

O. "Project site" is the space available to the CONTRACTOR for performance of work, either exclusively or in conjunction with others performing construction as part of the project.

P. "Testing Laboratory" is an independent entity engaged to perform specific inspections or test, either at the project site or elsewhere, and to report on, or to interpret results of those inspections or tests as required. Unless otherwise indicated, testing laboratories shall be hired by the CONTRACTOR at no additional cost to the Johnson County Special Utility District.

Q. Equipment is "Listed" if of a kind mentioned in a list which:

1. Is published by a nationally recognized laboratory which makes periodic inspection of production of such equipment.

2. States that such equipment meets nationally recognized standards or has been tested and found safe for use in a specified manner.

3. Equipment is "Labeled" if:It embodies a valid label, symbol, or other identifying mark of a nationally recognized testing laboratory such as Underwriters Laboratories, Inc.

4. Production is periodically inspected in accordance with nationally recognized standards or tests to determine safe use in a specified manner.

R. Equipment is "Certified" if:

1. Equipment has been tested and found by a nationally recognized testing laboratory to meet nationally recognized standards or to be safe for use in a specified manner.

2. Production is periodically inspected by a nationally recognized testing laboratory.

3. It bears a label, tag, or other record of certification.

1.05 REFERENCE STANDARDS

A. Applicable construction industry standards have the same force and effect as if bound or copied directly into the Contract Documents regardless of lack of reference within the Contract Documents. Where Contract Documents include more stringent requirements than the reference standards, the Contract Documents shall apply.

1. Standards referenced directly in the Contract documents take precedence over standards that are not referenced but recognized in the construction industry as applicable.

2. Except as otherwise limited by the Contract Documents, enforce standards not referenced but recognized in industry as applicable for performance of the work. The ENGINEER shall decide whether code or standard is applicable, or which of several are applicable.

B. Consider a reference standard to be the latest edition with supplements or amendments when standard is referred to in an individual Specification Section but is not listed by the title and date.

C. Maintain copies of reference standards at project site throughout construction period. Make copies of reference standards available as requested by ENGINEER or Johnson County Special Utility District.

D. Enforce the most stringent requirements where compliance with two (2) or more standards is specified, and they establish different or conflicting requirements for minimum quantities or quality levels, unless Contract Documents indicate otherwise.

1. Quantity or quality level shown or indicated shall be minimum to be provided or performed in every instance.

2. Actual installation may comply exactly with minimum quality indicated, or it may exceed that minimum within reasonable limits.

3. In complying with these requirements, indicated numeric values are minimum or maximum values, as noted, or appropriate for context of requirements.

4. Refer instances of uncertainty to the ENGINEER for decision before proceeding.

E. Trade association names and titles of general standards are frequently abbreviated. Where acronyms or abbreviations are used in specifications or other Contract Documents they mean recognized name of trade association, standards generating organization, authority having jurisdiction, or other entity applicable to context of text provision. Refer to "Encyclopedia of Associations", published by Gale Research Company.

PART 2 NOT USED

PART 3 NOT USED

END OF SECTION

PART 1 GENERAL

1.01 WORK INCLUDED

A. Construct work as described in the PROJECT NAME Contract Documents.

1. Provide materials, equipment, and incidentals required to make the project completely operable.

2. Provide the labor, equipment, tools, and consumable supplies required for a complete project.

3. Provide the civil, architectural, structural, mechanical, electrical, instrumentation and all other work required for a complete and operable project.

4. Test and place the completed project in operation.

5. Provide the special tools, spare parts, lubricants, supplies, or other materials as required for the operation and maintenance of the Project.

6. Drawings and Specifications may not indicate or describe all of the work required to complete the project. Additional details required for the completion of the project are to be provided by the CONTRACTOR and coordinated with the ENGINEER.

1.02 JOB CONDITIONS

A. The General Conditions, the Special Conditions, and Division One Specifications apply to each Specification section.

B. Comply with all applicable federal, state and local codes and regulations pertaining to the nature and character of the work being performed.

1.03 DESCRIPTION OF WORK

A. Refer to Section 000102; 1.02 A

1.04 TIME OF COMPLETION

A. The Work will be substantially completed within 330 days after the date when the contract times commence to run as provided in paragraph 4.01 of General Conditions, and completed and ready for final payment in accordance with 15.06 of the General Conditions within 360 days after the date when the Contract Times commence to run.

1.05 SCHEDULE AND SEQUENCE OF CONSTRUCTION

A. Within 10 days prior to submission of the first partial payment request, the CONTRACTOR shall submit to the ENGINEER for approval six copies of the schedule under which the CONTRACTOR proposes to complete the project.

B. If, in the opinion of the ENGINEER, construction progress falls behind the schedule, the CONTRACTOR shall take such action as necessary to improve his progress, and the CONTRACTOR shall submit to the ENGINEER a revised schedule demonstrating his proposed plan to make up the lag in scheduled progress and complete the project within the contract time.

1.06 CONSTRUCTION OF UTILITIES

A. Coordinate with Utility Companies or their contractors to provide all required utilities for this project.

B. Power and Electrical Services

1. Pay for temporary construction power, including but not limited to construction cost, meter connection, fees and permits.

1.07 OCCUPANCY

A. As soon as any portion of the Project is ready to use, the City of Georgetown shall have the right to operate the portion upon written notice to the CONTRACTOR.

B. Testing of Controls, including specified test periods, training, and start-up does not constitute acceptance for operation.

C. The City of Georgetown may accept the facility for continued use after start-up and testing at the option of the City of Georgetown. If acceptance is delayed at option of the City of Georgetown, shut down facilities per approved Operation and Maintenance procedures.

D. The execution of bonds is understood to indicate the consent of surety.

E. Conduct operations to insure the least inconvenience to the City of Georgetown and general public.

PART 2 PRODUCTS

2.01 MATERIALS

A. Provide materials and products per the individual sections of the Specifications.

PART 3 NOT USED

END OF SECTION

PART 1 GENERAL

1.01 PRIORITY OF INTERPRETATION

A. The Contract Documents are complementary, and what is called for by one document shall be binding as if called for by all. In case of conflict between any of the Contract Documents, priority of interpretation shall be in the following order:

1. General Conditions
2. Agreement
3. Performance and Payment Bonds
4. Special Bonds, if any
5. Bid
6. Special Technical Specifications and Conditions
7. Plans
8. Technical Specifications

1.02 SALES TAX EXEMPTION – NOT USED

1.03 MINIMUM WAGE SCALE – NOT USED

1.04 METHODS OF OPERATION

A. The CONTRACTOR shall inform the ENGINEER in advance concerning his plans for carrying on each part of the work, but the CONTRACTOR alone shall be responsible for safety, adequacy, and efficiency of his plant, equipment, and methods.

B. The OWNER and ENGINEER will not be responsible for any act or omission of the CONTRACTOR, or any subcontractor, or any of the agents or employees, or any other persons performing any of the work. The OWNER and ENGINEER will not be responsible for any failure of the CONTRACTOR or his subcontractors or any other persons to perform the work in accordance with the requirements of the contract documents.

C. Review by the ENGINEER of any plan or method of work proposed by the CONTRACTOR shall not relieve the CONTRACTOR of any responsibility therefore, and such review shall not be considered as an assumption of any risk or liability by the OWNER or ENGINEER, or any officer, agent, or employee thereof.

1.05 SUBCONTRACTORS

A. Subcontractors who may be used by the CONTRACTOR will not be approved by the OWNER prior to award of the contract. After award, if approval is given for a subcontractor to perform certain items of the work, the CONTRACTOR will remain completely and totally responsible for all work under this contract. If directed by the ENGINEER, the CONTRACTOR will also be responsible for correcting any defects and/or removing any defective work completely from the site and satisfactorily replacing the work.

1.06 WORKMANSHIP

A. These specifications contain detailed instructions and descriptions covering the major items of construction and workmanship necessary to construct the above mentioned project. The specifications are intended to be so written that only first class workmanship and finish of the best grade and quality will result. The fact that these specifications may fail to be so complete as to cover all details will not relieve the CONTRACTOR of full responsibility for providing a completed project of high quality, first class finish and appearance and satisfactory for operation, all within the apparent intent of the plans and specifications.

1.07 ESTIMATED QUANTITIES

A. The Contract Documents are intended to clearly show all work to be done and materials to be furnished. Where the estimated quantities are shown for the various classes of work to be done and material to be furnished under this contract, they are approximate and are to be used only as a basis for estimating the probable cost of the work and for comparing the proposals offered for the work. It shall be understood that the actual amount of work to be done and material to be furnished under this contract may differ from these estimates, and where the basis for payment under this contract is the unit price method, payment shall be for the actual amount of such work and material furnished.

B. Where payment is based on the unit price method, the CONTRACTOR agrees that he will make no claim for damages, anticipated profits or otherwise on account of any differences which may be found between the quantities of work actually done, the material actually furnished under this contract and the estimated quantities contemplated and contained in the proposal. However, in case the actual quantity of any major item becomes as much as 25% more than or 25% less than the estimated or contemplated quantity for such item, then either party to this Agreement, upon demand, shall be entitled to a revised consideration upon the portion of the work above or below 25% of the estimated quantity. OWNER will not pay for increased material prices for any quantity increase within the 25% allowable. Therefore, the CONTRACTOR should endeavor to have his material quote cover up to 25% more than the bid quantity.

C. A "Major Item" shall be construed to be any individual bid item included in the proposal that has a total cost equal to or greater than 5% of the total contract cost, computed on the basis of the proposal quantities and contract unit prices. Any revised consideration is to be determined by Agreement between the parties, otherwise by terms of the Agreement, as provided under Changes in Contract Price in the General Conditions.

1.08 FINAL QUANTITIES INSTALLED

A. Should there be a discrepancy between the CONTRACTOR's claim for quantity of materials installed and the quantity measured by the ENGINEER, the discrepancy may be resolved as follows:

B. The plans shall be thoroughly checked by the ENGINEER and CONTRACTOR to assure that all changes in work have been recorded and no errors exist in the material take-off.

C. Should the quantity discrepancy not be resolved by means of plan sheet examination, then at the CONTRACTOR's request, segments of lines may be re-measured: however, if the CONTRACTOR's figures are not proven to be accurate by re-measurement, then the CONTRACTOR shall pay for cost of re-measurement.

D. Any deviations in straight-line routing of pipeline not approved by the ENGINEER shall be paid only for the footage of pipe which would have been required for a straight line installation.

1.09 PROTECTION OF LIVES AND PROPERTY

A. In order to protect the lives and health of his employees, the CONTRACTOR shall comply with all pertinent provisions of the "Manual of Accident Prevention in Construction" issued by the Associated General CONTRACTOR of America, Inc. The CONTRACTOR shall maintain an accurate record of all cases of death, occupational disease and injuries requiring medical attention or causing loss of time from work arising out of and in the course of work under this contract. The CONTRACTOR alone shall be responsible for the safety, efficiency and adequacy of his plant, appliances and methods and for any damage which may result from their failure, improper construction, maintenance or operation.

1.10 SANITARY FACILITIES

A. The CONTRACTOR shall provide adequate toilet facilities for use by workmen in accordance with O.S.H.A. provisions and shall maintain such facilities throughout the construction period.

1.11 EXISTING UTILITIES

A. It shall be the entire responsibility of the CONTRACTOR to locate all existing underground utilities ahead of the work, whether or not shown on the Plans, and to protect and preserve such utilities from any damage from the proposed construction operations. In the event an underground water, oil, gas, telephone line, or other utility is damaged, the respective City of Georgetown of said utility shall be notified immediately by the CONTRACTOR. It shall be the CONTRACTOR's entire responsibility to see that said utilities are repaired to the satisfaction of the ENGINEER and utility. If the CONTRACTOR shows a complete disregard for existing utilities, the CONTRACTOR will pay the City of Georgetown, $1,000 per occurrence in addition to paying all costs for repairing damage to existing utilities. Continued disregard for existing utilities may result in suspension or termination of the Construction Contract. Where overhead poles or anchors are encountered, or are necessary to be disturbed or moved, the CONTRACTOR shall contact the utility and arrange to have the necessary adjustments made, at no additional cost to the City of Georgetown. When signs are disturbed or damaged, the CONTRACTOR shall restore them to the same or better condition that existed prior to construction.

1.12 SATURDAY AND SUNDAY WORK

A. Construction work on Saturdays or Sundays will be permitted with prior coordination with the PROJECT INSPECTOR.

1.13 TCEQ PERMIT

A. The CONTRACTOR shall fully comply with the Texas Commission on Environmental Quality Permit. All construction activities shall fully comply with all aspects of this permit, and the CONTRACTOR shall certify to the City of Georgetown said compliance before the certificate of construction completion is issued. The CONTRACTOR shall apply for and obtain the permit before construction. The CONTRACTOR shall be responsible for the permit fee and all other costs associated with the referenced permit.

1.14 CONSTRUCTION SURVEYING

A. The construction surveying described in Paragraph 1 below shall be provided by the CONTRACTOR, if necessary. The surveying work contained in Paragraphs 2, 3, and 4 shall be considered subsidiary to the overall project and no separate payment shall be made for this work. Work contained in Paragraphs 2, 3, and 4 shall be accomplished by the CONTRACTOR, if necessary.

B. The surveyor shall obtain copies of all private property easements, and public right of way permits. From these easements and permits, the surveyor shall set alignment lathes, stakes, and hubs as needed and benchmarks as needed, plus alignment stakes at every horizontal PI. Also, alignment lathes, stakes, and hubs shall be set at every property line or ROW line crossing. The CONTRACTOR shall notify the ENGINEER at least 24 hours before each segment is to be staked. Each segment to be staked shall be a minimum of 1000 feet in length.

C. Locate and protect control points prior to starting the site work and preserve permanent reference points during construction. The CONTRACTOR shall not change or relocate points without prior approval of the ENGINEER. Notify ENGINEER when the reference point is lost, destroyed, or requires relocation. Replace project control points on the basis of the original survey.

D. Provide complete engineering layout of the work needed for construction.

1. Provide competent personnel. Provide equipment including accurate surveying instruments, stakes, platforms, tools, and materials.

2. Record data and measurements per standards.

E. Construction lines and grades, as well as base lines and benchmarks provided by the CONTRACTOR, shall be subject to such checks and reviews as the ENGINEER may, from time to time, desire to make.

1.15 WATER USED DURING CONSTRUCTION PERIOD

A. The CONTRACTOR shall pay to the Johnson County Special Utility District, $3.00 per thousand gallons for all water used for filling the lines, flushing, testing, leaks, etc.

B. The CONTRACTOR shall apply for and obtain a hydrant meter for water usage.

1.16 UTILITIES DURING CONSTRUCTION

A. The CONTRACTOR will be required to make arrangements for and pay for the electrical power and any other utilities required during construction.

1.17 RESTORATION OF SURFACES

A. The CONTRACTOR shall replace all surface material (including topsoil in original thickness), and shall restore gravel drives and roadways, fencing, sod and other surfaces disturbed, to condition equal to that before the work began, furnishing all labor and material incidental thereto.

1.18 FENCES AND SIGNS

A. When necessary for the CONTRACTOR to take down signs, fences or other obstructions, this shall be done at his own expense and replaced in the original condition after construction operations. Fences which are taken loose by the CONTRACTOR shall be done in a manner to prevent slacking of the remainder of the wire. The CONTRACTOR, prior to taking down any fence shall have complete approval of the Project Representative as to the width of the fence gap to be made and the manner in which existing posts are to be placed. No fences shall be cut without authorization in writing from Johnson County Special Utility District or ENGINEER.

1.19 CLEARING AND CLEAN UP

A. All necessary clearing shall be done by the CONTRACTOR. All tree branches, limbs and roots shall be removed and disposed of by the CONTRACTOR in order that the right-of-way may be left in a neat and presentable condition. Any damage resulting to trees, grass and shrubbery must be paid for, by the CONTRACTOR, and damage claims, if any, settled by the CONTRACTOR.

B. Prior to final acceptance of the project, the CONTRACTOR shall clean and smooth up the site of the work and remove all rock, debris, material, etc., leaving the project site with a neat appearance to the satisfaction of the Johnson County Special Utility District. Disposed of debris, rubbish, etc. shall be made in an area which shall meet the approval of the Johnson County Special Utility District and ENGINEER. The CONTRACTOR shall comply fully with all applicable EPA and TCEQ regulations.

1.20 START UP AND OPERATION

A. Prior to presentation for final acceptance of the work under this contract, the CONTRACTOR shall have started and operated all units at each site for a sufficient duration of time, thirty (30) days to permit the Johnson County Special Utility District and ENGINEER to observe overall performance of the respective units and equipment.

B. Such operation shall be properly coordinated with the Johnson County Special Utility District's operating personnel.

1.21 FEDERAL AND/OR STATE AGENCY'S APPROVAL AND INSPECTION

A. The written approval of the appropriate state agency having jurisdiction over the facility must be secured prior to payment of the final percentage retained under this contract.

B. The project site and premises as well as any records required shall be available at all reasonable times for inspection by authorized representatives of the State or Federal Agencies having jurisdiction over the project. The CONTRACTOR shall provide all necessary facilities for these inspections.

1.22 "RECORD DRAWING" INFORMATION

A. The CONTRACTOR shall be responsible for recording and providing all information concerning changes from the original plans as to valve, meter, and/or pipeline location for transfer to the "As-Built" or "Record Drawings" Plans. Final payment will not be released until "Record Drawings" are approved by the ENGINEER.

1.23 AFFIDAVIT OF BILLS PAID

A. Prior to final acceptance of the project by the Johnson County Special Utility District, the CONTRACTOR shall execute a Release by Claimants and an affidavit which states all bills for labor, materials and incidentals incurred in the construction of the project have been paid in full and that there are no claims pending of which he has been notified.

1.24 LIQUIDATED DAMAGES

A. It is understood and agreed between the parties hereto that time is of the essence under this Contract, and that for each calendar day of delay beyond the stipulated number of calendar days awarded under this Contract, the CONTRACTOR shall pay the Johnson County Special Utility District as liquidated damages the sum of $1,000.00 (One Thousand dollars) per day. It is also understood between the parties hereto that such sum shall be treated as liquidated damages and not as a penalty, and the Johnson County Special Utility District may withhold from the CONTRACTOR's final payment such sum as liquidated damages.

1.25 WARRANTY

A. The CONTRACTOR shall guarantee the work performed under this contract against defective materials and workmanship of a period of two (2) years from the date of final acceptance of the work by the Johnson County Special Utility District. The CONTRACTOR shall arrange to have a Maintenance Bond remain in effect for a period of two (2) years after the date of completion of construction work to cover his guarantee as stipulated under this item and in the General Conditions.

B. If defective materials and/or workmanship are discovered which require repairs made under this guarantee, all such repairs shall be done by the CONTRACTOR at his own expense within ten days after written notice of such defect. Should the CONTRACTOR fail to repair or correct such deficiency within ten days after notification, the Johnson County Special Utility District may make the necessary repairs and charge the CONTRACTOR with the applicable costs of all labor and materials required to correct the deficiency.

PART 2 - NOT USED

PART 3 - NOT USED

END OF SECTION

PART 1 GENERAL

1.01 GENERAL

A. Install all piping systems in accordance with the Drawings, Technical Specifications, approved shop drawings and manufacturer's installation instructions at CONTRACTOR's expense.

B. Examine all piping materials prior to installation and replace items that are damaged or otherwise defective.

C. Thoroughly clean inside of all piping, valves, and accessories, and outside of all materials which will be exposed. Clean before installation and maintain in that condition until accepted by Owner.

D. Provide secure temporary caps or inflatable plugs at all pipe ends at the end of each day to prevent foreign material from entering the piping systems. Brace pipe to restrain from floating.

E. Do not modify structures, equipment, or piping for the purpose of installing piping unless specifically authorized by the ENGINEER.

F. All piping systems shall be cleaned and tested prior to making connections at structures and to existing pipe systems. Small diameter pipes shall be flushed and large diameter pipes shall have mandrels pulled or other acceptable verification furnished that pipes are clean and no construction debris remains. Temporary blocking and forms used to grout inverts and blockouts shall be removed and manholes and pipes shall be tested before payment will be approved for the last 10 percent of the respective pipe pay estimate items.

G. CONTRACTOR shall be responsible for, development, and comply with the trench safety plan and a confined space entry plan.

H. Where indicated on the Plans, the CONTRACTOR shall furnish and install Polyvinyl Chloride Pipe

PART 2 NOT USED

PART 3 NOT USED

END OF SECTION

PART 1 GENERAL

1.01 SECTION INCLUDES

A. General use of the Site including properties inside and outside of Construction Limits, work affecting road, ramps, streets and driveways and notification to adjacent occupants.

1.02 MEASUREMENT AND PAYMENT

A. No separate measurement and payment for work included in this Specification section.Include all cost in the Contract Bid Price for Work of which this is a component part.

1.03 CONSTRUCTION LIMITS

A. Confine access, operations and storage areas to Construction Limits provided by the Owner as stipulated in Section 007200 - General Conditions; trespassing on abutting lands or other lands in the area is not allowed without written permission from said property owner.

B. Restrict total length of distributed materials along the route of construction to 1,000 linear feet unless otherwise approved in writing by the Owner.

1.04 PROPERTIES OUTSIDE OF RIGHTS-OF-WAY

A. Make arrangements, at no cost to the Owner, for temporary use of private properties. Contractor and Surety shall indemnify and hold harmless Owner against claims or demands arising from such use of properties outside of rights-of-way. Submit a copy of agreements between private property owners and the Contractor prior to use of the area. Agreements between private property owners and the Contractor shall be notarized or bear the signatures of two witnesses.

B. Do not alter the condition of properties adjacent to and along Construction Limits.

C. Do not use ways, means, methods, techniques, sequences, or procedures that result in damage to properties or existing improvements.

D. Restore damaged properties outside of Construction Limits at no cost to the Owner.

1.05 USE OF SITE

A. Obtain approvals from governing authorities prior to impeding or closing public roads and streets. Do not close more than two consecutive intersections at one time.

B. Avoid obstructing drainage ditches or inlets. When obstruction is unavoidable due to requirements of the Work, provide grading and temporary drainage structures to maintain unimpeded flow.

C. Sprinkler Systems

1. Locate and protect lawn sprinkler systems.

2. Test irrigation system prior to construction.

3. Repair or replace damaged systems to condition existing at start of the Work, or better.

D. Conform to daily clean-up requirements of Section 007200 - General Conditions.

E. Beware of overhead power lines existing in area and in close proximity of the Project. When adequate clearance between, energized overhead power line and construction-related activity cannot be maintained, request power company to de-energize or move conflicting overhead power line. Schedule, coordinate and pay costs associated with de-energizing or moving conflicting overhead power lines.

1.06 NOTIFICATION TO ADJACENT OCCUPANTS

A. Notify individual occupants in areas to be effected by the Work of proposed construction and time schedule. Notify not less than 72 hours or more than two weeks prior to work performed within 200 feet of homes or businesses.

B. Include in notification nature of the Work, and names and telephone numbers of two company representatives for resident to contact. Representatives must be available on 24-hour call.

C. Submit proposed notification to the Engineer for approval. Consider ethnicity of the neighborhood where English is not the dominant language. Provide notice in an appropriate language or languages.

1.07 PUBLIC, TEMPORARY, AND CONSTRUCTION ROADS AND RAMPS

A. Construct and maintain temporary detours, ramps, and roads to provide for normal public traffic flow when it is necessary to close public roads or streets.

B. Provide mats or other means to prevent overloading or damage to existing roadways from tracked equipment, large tandem axle trucks or equipment that may damage the existing roadway surfaces.

1.08 EXCAVATION IN STREETS AND DRIVEWAYS

A. Obtain traffic approval from Municipality or County and Engineer's approval when nature of the Work requires closure of an entire street. Permits required for street closure are the Contractor's responsibility. Avoid unnecessary inconvenience to abutting property owners when possible.

B. Remove surplus materials and debris and open each block for public use, as work in that block is complete.

C. Acceptance of any portion of the Work will not be based on return of street to public use.

D. Avoid obstructing driveways or entrances to private property or provide alternate access.

E. Provide temporary crossings or complete excavation and backfill in one continuous operation to minimize duration of obstruction when excavation is required across drives or entrances.

F. Provide barricades and signs in accordance with applicable governmental agency requirements.

1.09 TRAFFIC CONTROL

A. Contractor to comply with "Texas Manual on Uniform Traffic Control Devices" and all applicable local regulations.

1.10 SURFACE RESTORATION

A. Restore the site, including landscaping, to the condition existing before construction or better.

B. Repair paved areas per the applicable specifications.

1.11 LIMITS OF CONSTRUCTION

A. Confine operations to lands within construction work limits. Unless otherwise noted on the Drawings adhere to the following:

1. Where utility alignment is within esplanade, and construction limits are shown on the Drawings to extend to edge of esplanade, keep equipment, materials, and stockpiles a minimum of five feet from back of curb.

2. Where construction limits shown on the Drawings extend to property line, keep adjacent properties free of equipment, materials, and stockpiles.

1.12 EQUIPMENT AND MATERIAL SALVAGE

A. Legally dispose of equipment offsite at no additional cost to the Owner when Engineer deems equipment unfit for further use or is stated in the Contract Documents.

PART 2 PRODUCTS – Not Used

PART 3 EXECUTION – Not Used

END OF SECTION

PART 1 GENERAL

1.01 SECTION INCLUDES

A. Procedures for measurement and payment plus conditions for nonconformance assessment and nonpayment for rejected Products.

1.02 AUTHORITY

A. Measurement methods delineated in Specification sections are intended to complement criteria of this Section. In event of conflict, requirements of the Specification section shall govern.

B. Engineer will take all measurements and compute quantities accordingly.

C. Contractor shall assist by providing necessary equipment, workers, and survey personnel.

1.03 UNIT QUANTITIES SPECIFIED

A. Quantity and measurement estimates stated in executed construction documents are for contract purposes. Contractor must verify payment with Engineer and Owner if quantities and measurements are changed.

B. When actual work requires greater or lesser quantities than those quantities indicated in executed construction documents, provide required quantities at Unit Prices contracted.

1.04 MEASUREMENT OF QUANTITIES

A. Measurement by Weight: Reinforcing steel, rolled or formed steel or other metal shapes are measured by CRSI or AISC Manual of Steel Construction weights. Welded assemblies are measured by CRSI or AISC Manual of Steel Construction or scale weights.

B. Measurement by Volume:

1. Stockpiles: Measured by cubic dimension using mean length, width, and height or thickness.

2. Excavation and Embankment Materials: Measured by cubic dimension using average endarea method.

C. Measurement by Area: Measured by square dimension using mean length and width or radius.

D. Linear Measurement: Measured by linear dimension, at item centerline or mean chord.

E. Other: Items measured by weight, volume, area, or linear means or combination, as appropriate, as completed item or unit of the Work.

F. Measurement by Each: Measured by each instance or item provided.

G. Measurement by Lump Sum: Measure includes all associated work.

1.05 PAYMENT

A. Payment includes full compensation for all required supervision, labor, Products, tools, equipment, plant, transportation, services, and incidentals; and erection, application or Installation of an item of the Work; and the Contractor's overhead and profit.

B. Interim payments for stored materials may be made only for materials to be incorporated under items covered in Unit Prices, unless disallowed in Section 007300 – Supplementary Conditions.

C. Progress payments will be based on Engineer's observations and evaluations of quantities incorporated in the Work multiplied by Unit Price.

D. Final payment for work governed by Unit Prices will be made on the basis of actual measurements and quantities determined by the Engineer multiplied by the Unit Price for work which is incorporated in or made necessary by the Work.

E. All payments will be made in accordance with Section 007200 – General Conditions.

1.06 NONCONFORMANCE ASSESSMENT

A. Remove and replace work, or portions of the Work, not conforming to the Contract documents.

B. When not practical to remove and replace work, Engineer will direct one of the following remedies:

1. Nonconforming work will remain as is, but Unit Price will be adjusted lower at the discretion of the Engineer.

2. Nonconforming work will be modified as authorized by the Engineer, and the Unit Price will be adjusted lower at the discretion of the Engineer, when modified work is deemed less suitable than specified.

C. Specification sections may modify the above remedies or may identify a specific formula or percentage price reduction.

D. Authority of the Engineer to assess nonconforming work and identify payment adjustment is final.

1.07 NONPAYMENT FOR REJECTED PRODUCTS

A. Payment will not be made for any of the following:

1. Products wasted or disposed of in an unacceptable manner.
2. Products determined as nonconforming before or after placement.
3. Products not completely unloaded from transporting vehicles.
4. Products placed beyond lines and levels of required work.
5. Products remaining on hand after completion of the Work, unless specified otherwise.
6. Loading, hauling, and disposing of rejected Products.

PART 2 PRODUCTS – Not Used

PART 3 EXECUTION – Not Used

END OF SECTION

PART 1 GENERAL

1.01 SECTION INCLUDES

A. Preparation and submittal of Schedule of Values for Stipulated Price Contracts or for Major Unit Price Work on Unit Price Contracts.

1.02 PREPARATION

A. For Stipulated Price Contracts, subdivide Schedule of Values into logical portions of the Work, such as major work items or work in contiguous construction areas. Organize each portion using the Project Manual Table of Contents as an outline for listing value of the Work by Sections.

B. For Unit Price Contracts, all items should include a proportional share of Contractor's overhead and profit so that total of all items will equal the Contract Price.

C. For lump sum equipment items, where submittal of Operation and Maintenance Manuals and equipment testing are required, include separate items for equipment Operation and Maintenance Manuals valued at a minimum of five percent of the lump sum amount for each equipment item.

D. Round off figures for each item listed to the nearest $100. Set the value of one item, when necessary, to make total of all values equal the Contract Price for Stipulated Price Contracts or the lump sum amount for Unit Price Work.

E. Front loading of Lump Sum Contracts is prohibited.

F. Breakdown costs into:

1. Delivered cost of product, with taxes unpaid. The District is tax exempt.

2. Total installed cost.

3. Major equipment, products, or operations shall be broken down if the installed value is greater than $1,000.

1.03 SUBMITTAL

A. Submit Schedule of Values, in accordance with the requirements of Section 013300 – Submittal Procedures, not more than 10 days after the Notice to Proceed.

B. Submit Schedule of Values in an approved electronic spreadsheet file formatted to print on 11 inch by 17 inch or smaller standard size paper.

C. No Progress Payment will be processed until an acceptable Schedule of Values has been received.

D. Revise Schedule of Values for items affected by contract modifications. After Engineer has confirmed changes, resubmit at least 10 days prior to the next scheduled Application for Payment due date.

PART 2 PRODUCTS – Not Used

PART 3 EXECUTION – Not Used

END OF SECTION

PART 1 GENERAL

1.01 SECTION INCLUDES

A. As appropriate for the project, this section includes pre-construction conference and progress meetings.

PART 2 PRODUCTS – Not Used

PART 3 EXECUTION

3.01 PRE-CONSTRUCTION CONFERENCE

A. Engineer will schedule pre-construction conference.

B. Attendance Requested as applicable:

1. Owner:
    a. Owner representative(s)
2. Contractor:
    a. Project Manager
    b. Superintendent
    c. Major subcontractors
3. Engineer:
    a. Design Engineer
    b. Project Manager
    c. Subconsultants:
        i. Major Design consultants, as applicable.
4. City
    a. CITY Engineer
    b. CITY Inspector

C. Agenda:

1. Distribution of the Contract Documents.
2. Designation of personnel representing the Parties and Design Consultant.
3. Review of insurance.
4. Discussion of formats for Schedule of Values and Construction Schedule.
5. Procedures and processing of Shop Drawings, substitutions, pay estimates or Applications for Payment, Requests for Information, Requests for Proposal, Modifications, the Contract closeout, and other submittals.
6. Scheduling of the Work and coordination with other contractors.
7. Review of Subcontractors and Suppliers.
8. Procedures for testing.
9. Procedures for maintaining record documents.
10. Use of premises.
11. Construction controls.
12. Temporary utilities.
13. Survey and layout.
14. Security and housekeeping procedures.
15. Field office requirements.

3.02 PROGRESS MEETINGS (when required by project)

A. Hold meetings at Project field office or other location designated by the Engineer. Hold meetings at monthly intervals, or more frequently when directed by the Contractor or Engineer.

B. Attendance Required: Superintendent, major Subcontractors and Suppliers, Owner representatives, Engineer(s) and major design sub consultants as appropriate for agenda topics for each meeting.

C. Engineer will make arrangements for meetings and for recording minutes.

D. Engineer will prepare the agenda and preside at meetings.

E. Provide required information and be prepared to discuss each agenda item.

F. Agenda:

1. Review minutes of previous meetings.
2. Review of construction schedule, pay estimates, and compliance submittals.
3. Field observations, issues, and necessary decisions.
4. Identification of issues that impede planned progress.
5. Review of submittal schedule and status of submittals.
6. Maintenance of Construction Schedule.
7. Corrective measures to regain Construction Schedule.
8. Planned progress during the succeeding work period.
9. Coordination of projected progress.
10. Review of RFI and RFP status.
11. Modification status.
12. Effect of proposed Modifications on Construction Schedule.
13. Review of off-site fabrication and delivery schedules.
14. Maintenance of quality and work standards.
15. Review Project Record Drawings.
16. Other item relating to the Work.

END OF SECTION

PART 1 GENERAL

1.01 SECTION INCLUDES

A. Provide initial, monthly, and revised Construction Schedules as required by this section for the Work.

1.02 FORM AND CONTENT OF INITIAL CONSTRUCTION SCHEDULE

A. General:

1. The Construction Schedule must show the Contractor's intended schedule for processing the work. Scheduling software shall be Microsoft Project or similar program approved by the Engineer. A working project file (.mpp type) shall be submitted along with an electronic pdf file.

2. Title block must show Project identification – Project Name, Owner Name and Engineer Project Number.

B. Bar Chart:

1. The format of the schedule is to be landscape orientation on a sheet size not to exceed 11x17 that, in general, allows the entire contract duration to be contained on one page unless otherwise requested by the Engineer.

2. Schedule must show Notice to Proceed date, critical path, Substantial Completion and Final Completion. When applicable, also show Operation and Maintenance Manuals and training, as applicable

3. In addition, show major construction activities including milestones as separate activities on the schedule.

4. Show separate activities for each Shop Drawing and Product Data submittal critical to timely completion. Show submittal dates and Engineer's review duration per Section 013300 – Submittal Procedures.

5. Provide separate horizontal bar for each activity. As a minimum, list activity number, activity identification, start date, finish date, and duration for each activity at left side of diagram.

6. Horizontal Time Scale:

a. Time must be in calendar days, not work days, to coincide with the Contract Time.

b. Identify first work day of each week. The preferred time scale is daily but weekly may be used for longer projects.

7. Scale and Spacing: Notes must be legible. Allow space for notations and future revisions.

8. Order of Listings: Order bar chart listings by phases or other approved groups of activities that are contiguous. List activities in chronological order within each phase or group.

C. Provide, if applicable, a schedule modification report via letter or email to describe:

1. Major changes in scope.

2. Revised projections in progress, completion, or changes in activity duration.

3. Other identifiable changes.

4. Problem areas, anticipated delays, and the impact on schedule.

5. Corrective action recommended and its effect.

6. Effect of changes on schedules of other contractors.

7. Product delivery lead times.

8. Discuss any activity that affects the public (such as phases of traffic control), interaction with specific forces of the Owner (such as valve operation, chlorination and testing) or other associated contractors.

9. Discuss any activities that have changes that will affect project completion.

1.03 PROGRESS REVISIONS

A. Submit revised Schedule with all Applications for Payment. When required, re-submittals for rejected revisions must be submitted and accepted prior to processing Application for Payment.

B. Include additional data with Bar Chart described in Paragraph 1.03A of this Section:

1. Show original dates for each activity in the accepted initial progress schedule by narrow bar next to a wider bar for the current schedule.

2. Show date each activity actually started or finished when an event has occurred. Clearly identify actual dates in two right-most columns in left portion of the chart.

3. Indicate the percentage progress to the date of submittal for each activity.

1.04 SUBMITTALS

A. Submit the initial progress schedule at the pre-construction meeting. Engineer will review the schedule and return a reviewed copy.

B. Work is not to be started until an acceptable schedule has been submitted.

C. All submittals except the Construction Schedule and Schedule of Values will be returned without review until the Construction Schedule has been accepted.

D. Cut-off dates for progress revisions will be established at the Pre-Construction Conference to avoid delaying processing of Applications for Payment. Use the cut-off date for the first approved revision and for all other revisions unless the Engineer requests a special revision.

E. When required, re-submit within seven days after return of review copy.

PART 2 PRODUCTS – Not Used

PART 3 EXECUTION – Not Used

END OF SECTION

PART 1 GENERAL

1.01 SECTION INCLUDES

A. Photographic requirements for construction photographs and submittals.

1.02 DEFINITIONS

A. Pre-construction Photographs: Photographs taken, in sufficient numbers and detail, prior to date of commencement of the Work, to show original construction site conditions.

B. Progress Photographs: Photographs, taken throughout the duration of construction at regular intervals and from fixed vantage points, pre-approved by the Owner, that document progress of the Work.

C. Finished Photographs: Photographs, taken by a professional photographer near date of Substantial Completion and before Owner's acceptance of the Work, that are suitable for framing and for use in brochures or on the Internet.

1.03 MEASUREMENT AND PAYMENT

A. Submittal Quantities and Frequencies.

1. Pre-construction Photographs:

a. For Stipulated Price Contracts, submit Pre-construction Photographs, if required, prior to first Application for Payment.

b. For Unit Price Contracts, submit Pre-construction Photographs prior to start of construction operations.

c. Pre-Construction Photographs are required to be taken for all Projects but are not required to be submitted unless otherwise specified.

2. Progress Photographs:

a. For Stipulated Price Contracts, submit Progress Photographs, if required, with each Application for Payment at the times established for submittal of Applications for Payment. Monthly Applications for Payment shall be deemed incomplete if not accompanied by the required Progress Photographs. Contractor's failure or election to not submit a monthly Application for Payment shall not affect the requirement for monthly Progress Photographs.

b. Progress Photographs are not required for Unit Price Contracts unless otherwise specified.

3. Finished Photographs:

    a. For Stipulated Price Contracts submit Finished Photographs, if required, after date of Substantial Completion and prior to final payment. Vantage points for Finished Photographs will be approved separately from vantage points approved for Progress Photographs.

    b. Finished Photographs are not required for Unit Price Contracts unless otherwise specified.

1.04 SUBMITTALS

A. Refer to Section 013300 – Submittal Procedures for submittal requirements.

B. All photographs to be digital photography, submitted by color PDFs. Use 8.0 megapixel density or greater for photographs, if required, submit digital photographic files as discussed and agreed to at the Pre-Construction Conference.

C. Labeling. Label each File and Photograph with the following information:

1. Project Name.

2. Contractor Name.

3. Date photograph was taken.

4. Description of photo subject.

D. Photographs become the property of the Owner. Do not publish photographs without written consent by the Owner.

1.05 QUALITY ASSURANCE

A. Contractor shall be responsible for the quality of and timely execution and submittal of photographs.

B. For Finished Photographs, Contractor shall use a professional photographer, with five years minimum professional experience in the Construction industry. Contractor shall submit name, address and credentials of professional photographer for Engineer's review and approval.

PART 2 PRODUCTS – Not Used

PART 3 EXECUTION

3.01 PRE-CONSTRUCTION PHOTOGRAPHS

A. Prior to commencement of construction, photograph the site to include construction corridor and areas, detour routes, and staging or storage areas.

    a. Any pre-disturbed conditions that need to be returned to pre-existing conditions must be photographed.

    b. A Pre- Construction Video of the alignment must be recorded and supplied to the Engineer.

1. For Stipulated Price Contracts, unless specified as a requirement in other Sections, these photographs are optional for the Contractor, but are highly recommended for areas bounded by other property owners.

2. Pre-construction photographs are required for Unit Price Contracts. For line projects with scheduled construction segments, take Pre-construction Photographs prior to commencement of work on each segment.

B. Prepare Pre-construction Photographs as follows:

1. Show the following information on a non-reflective chalkboard placed within the picture frame:

   a. Engineer Project Number.

   b. Project Name.

   c. Date and time photographs were taken (Automatic date/time on Photograph is acceptable).

   d. Baseline station, direction of view (i.e. N, S, NW, etc.) and/or house number or street address and street name.

2. Pre-construction Photographs shall indicate condition of the following:

   a. Esplanades and boulevards.

   b. Yards (near side and far side of street).

   c. House walks and sidewalks.

   d. Curbs.

   e. Areas between walks and curbs.

   f. Particular features (e.g. yard lights, shrubs, fences, trees).

C. Show the location of vantage points and direction of shots on a key plan of the site.

3.02 PROGRESS PHOTOGRAPHS

A. Progress Photographs document monthly advancement of the Work. Select vantage points for each shot so as to best show status of construction and progress since last photograph submittal. Select camera stations that will require little or no movement or adjustment over the duration of construction.

B. Take monthly Progress Photographs at regular intervals to coincide with cutoff dates associated with each Application for Payment.

3.01 FINISHED PHOTOGRAPHS

A. Finished Photographs shall be "staged" and taken by a professional photographer to depict the most flattering images of a finished facility. Two vantage points, from which Finished Photographs will be taken, shall be agreed to in advance by the Owner. Photographer shall consider lighting, time of day, height of eye, landscaping and placement of vehicles, people and other props in each picture. Filters and post-photography processing may be utilized to achieve a finished product acceptable to the Owner.

3.02 LOCATION

A. Vantage points, times and conditions for camera stations and photography for Progress and Finished Photographs shall be mutually agreed upon by the Owner, Contractor and Photographer. Progress Photograph vantage points may be changed by mutual agreement as the Work progresses, at no additional cost to the Owner.

END OF SECTION

PART 1 GENERAL

1.01 SECTION INCLUDES

A. Procedures for the submittal of all items required by the Construction Documents. These include but are not limited to the following:

1. Schedule of Values
2. Construction Schedules
3. Shop Drawings, Product Data and Samples
4. Operations and Maintenance (O&M) Manuals, if applicable.
5. Project Specific Items

1.02 SUBMITTAL PROCEDURES

A. Scheduling and Handling:

1. Submit Shop Drawings, data and samples for related components as required by the Contract.
2. Schedule submittals well in advance of need for products. Allow time for delivery of products after submittal acceptance.
3. Develop submittal schedule that allows sufficient time for initial review, correction, resubmittal and final review of all submittals. Allow a minimum of 14 calendar days for initial review. Engineer will review and return submittals to the Contractor as expeditiously as possible but time required for review will vary depending on complexity and quantity of data submitted.
4. Engineer's review of submittals covers only general conformity to the Drawings, Specifications and dimensions that affect layout. Contractor is responsible to determine quantities and dimensions. No quantities and dimensions will be verified by the Engineer. Contractor is responsible for errors, omissions or deviations from the Contract requirements; review of submittals does not relieve the Contractor from the obligation to furnish required items in accordance with the Contract requirements.
5. Hard Copy Submittal – Submit five copies of documents unless Electronic Submittal permitted.
6. Electronic Submittal – Electronic submittals are acceptable if submitted in a PDF format. Engineer will review and return a PDF file by electronic transmission. PDF file shall include all pages in one electronic document, merged. If submitted as multiple separate PDF documents, the submittal will be rejected.
7. Revise and resubmit submittals as required. Identify all changes made since previous submittal.

B. Transmittal Form and Numbering:

1. Transmit each submittal to the Engineer with transmittal letter which includes:

   a. Date and Submittal Number.

   b. Project Name and Engineer Project Number.

   c. Names of Contractor, Subcontractor, Supplier and Manufacturer.

   d. Identification of product(s) being supplied.

   e. Location of where product is to be Installed.

   f. Applicable Specification Section number.

2. Identify deviations from the Contract Documents. Itemize and detail on separate 8½ by 11-inch sheets entitled "DEVIATIONS FOR_____".

3. When required by the Engineer have design deviations signed and sealed by an appropriate design professional, registered in the State of Texas.

4. Sequentially number transmittal letters beginning with number one. For resubmittals use original number with an alphabetic suffix (i.e., 2A for the first resubmittal of Submittal 2,or 15C for third resubmittal of Submittal 15, etc.).

5. Show only one type of work or product on each submittal.

C. Contractor's Stamp:

1. Apply Contractor's Stamp signed by the Contractor's authorized representative certifying that the items have been reviewed in detail by the Contractor and that they comply with the Contract requirements, except as noted by requested variances and as identified in Paragraph 1.02.B.2 above.

2. As a minimum, Contractor's Stamp shall include:

   a. Contractor's Name.

   b. Engineer Project Number.

   c. Submittal Number.

   d. Statement certifying the Contractor has reviewed submittal and it is in compliance with the Contract.

   e. Check boxes for "No Deviation" and "Deviations as Noted".

   f. Signature line for the Contractor.

D. Submittals will be returned with one of the following Responses:

1. "NO EXCEPTION TAKEN" checked when sufficient information has been supplied to determine that item described appears to comply with the Contract requirements. No resubmittal is required.

2. "REVISE & RESUBMIT" checked when submittal does not contain sufficient information, or when information provided does not appear to meet the Contract requirements. Additional data or details requested must be submitted for review.

3. “REJECTED” checked when all items submitted do not appear to comply with the Contract requirements. Resubmittal is required.

4. "NO EXCEPTION EXCEPT AS NOTED" when sufficient information has been supplied to determine that the item appears to comply with the Contract requirements subject to minor changes, or exceptions, which will be clearly noted. When exceptions noted require additional changes, the changes must be submitted to determine general compliance. Resubmittal is not required when exceptions require no further changes.

PART 2 PRODUCTS – Not Used

PART 3 EXECUTION – Not Used

END OF SECTION

PART 1 GENERAL

1.01 SECTION INCLUDES

A. Methods, schedules, and processes to be followed for Shop Drawings, Product Data and Sample submittals.

1.02 REQUIREMENT

A. Submit Shop Drawings, Product Data and Samples as required by Section 007200 – General Conditions of Agreement and individual Specification sections, using procedures specified in Section 013300 – Submittal Procedures and the requirements of this Section.

B. Shop Drawings, Product Data and Samples are not considered the Contract Documents.

1.03 SHOP DRAWING/SUBMITTAL SCHEDULE

A. Submit a separate Shop Drawing submittal schedule at same time the Construction Schedule is submitted or include it in the overall Construction Schedule. Include Product Data and Sample submittals in the schedule. Applications for Payment will not be processed until the Engineer has approved the Shop Drawing submittal schedule.

1.04 SHOP DRAWINGS

A. Submit as described in Section 013300 – Submittal Procedures.

B. Show the following accurately and distinctly:

1. Field and erection dimensions.

2. Arrangement and section views.

3. Relation to adjacent materials or structure, including complete information for making connections between the Work and work under other contracts.

4. Types of Products and finishes.

5. Parts list and descriptions.

6. Assembly drawings of equipment components and accessories showing respective positions and relationships to the complete equipment package.

7. Identify details by referencing sheet and detail numbers, schedule or room numbers as shown on the Drawings, where necessary for clarity.

C. Scale drawings to provide a true representation of the specific equipment or item Furnished.

D. Coordinate and submit components, necessary for the Engineer to adequately review submittal, as a complete package. Reproduction of the Drawings for use in Shop Drawings is not allowed.

1.05 PRODUCT DATA

A. Submit as described in Section 013300 – Submittal Procedures.

B. Mark each copy to identify applicable Products, models, and options to be used in the Work. Where required by the Specifications, supplement manufacturers' standard data to provide information unique to the Work.

C. Give manufacturers, trade name, model or catalog designation and applicable reference standard for Products specified only by reference standards.

D. Pre-approved and Pre-qualified Products.

1. For "pre-approved", "pre-qualified" and "approved" Products named in standard products list, provide an appropriate list designation, as described in Section 01610 – Product Selection and Requirements, within 30 days after Notice to Proceed.

2. For Products proposed as alternates to "approved" products, provide information required to demonstrate that the proposed Products meet the level of quality and performance criteria of the "approved" product.

1.06 SAMPLES

A. Submit Samples for review as required by the Specifications.

B. Submit as described in Section 013300 – Submittal Procedures.

C. Submit the number of Samples stated in the Specifications; Engineer will retain one.

D. Reviewed Samples that may be used in the Work are identified in the Specifications.

PART 2 PRODUCTS – Not Used

PART 3 EXECUTION – Not Used

END OF SECTION

PART 1 GENERAL

1.01 SECTION INCLUDES

A. Inspection services and references.

1.02 INSPECTION

A. City will appoint an Inspector(s) to represent the City to perform inspections, tests, and other services specified in individual Specification sections.

B. Engineer may also appoint, employ, and pay an independent firm to provide additional inspection or construction management services as indicated in Section 014534 – Testing Laboratory Services.

C. The independent firm will submit reports to the Engineer, indicating observations and results of tests and indicating compliance or noncompliance with the Contract requirements.

D. Contractor shall assist and cooperate with the Inspector; furnish samples of materials, design mix, equipment, tools, and storage.

E. Contractor shall notify Inspector 48 hours prior to expected time for operations requiring services.

F. Contractor shall pay for all services which are required due to Contractor's failure to comply with the Contract requirements (i.e., retests, cancellations without notification, etc.).

PART 2 PRODUCTS – Not Used

PART 3 EXECUTION – Not Used

END OF SECTION

PART 1 GENERAL

1.01 SECTION INCLUDES

A. Testing laboratory services and Contractor responsibilities related to those services.

1.02 SELECTION AND PAYMENT

A. Owner will select, employ, and pay for services of an independent testing laboratory to perform inspection and testing identified in individual Specification sections.

B. If the Owner employs a testing laboratory that does not relieve the Contractor of its obligation to perform work in accordance with requirements of the Contract Documents.

C. Contractor shall pay for all services which are required due to Contractor's failure to comply with the Contract requirements (i.e. retests, etc).

1.03 LABORATORY REPORTS

A. Testing laboratory shall provide and distribute copies of laboratory reports to the distribution list the Engineer provides at the Pre-Construction Conference.

B. Keep one copy of each laboratory report distributed or emailed at the site field office for the duration of the Work.

C. Laboratory will email the material supplier, Contractor, Inspector, and Engineer reports that indicate failing test results as soon as failure is noted but no later than close of business on the working day following test completion and review.

1.04 LIMITS ON TESTING LABORATORY AUTHORITY

A. Laboratory may not release, revoke, alter, or enlarge requirements of them Contract.

B. Laboratory may not approve or accept any portion of the Work.

C. Laboratory may not assume Contractor duties.

D. Laboratory has no authority to stop the Work.

1.05 CONTRACTOR RESPONSIBILITIES

A. Provide safe access to the Work and to manufacturer's facilities for the Engineer and for testing laboratory personnel.

B. Notify the Inspector and testing laboratory during normal working hours 48 hours in advance of time for operations requiring inspection and testing services. When the Contractor fails to make timely prior notification, do not proceed with the Work requiring inspection and testing services.

C. Request and monitor testing as required to provide timely results and to avoid delays to the Work. Provide samples to laboratory in sufficient time to allow required test to be performed in accordance with specified test methods before intended use of Product.

D. Cooperate with laboratory personnel in collecting samples on-site. Provide incidental labor and facilities for safe access to the Work to be tested, to obtain and handle samples at site or at source of Products to be tested, and to facilitate tests and inspections including storage and curing of test samples.

E. When making arrangements with laboratory, ensure that Engineer is updated and kept apprised of all scheduled testing and testing results.

PART 2 PRODUCTS – Not Used

PART 3 EXECUTION

3.01 CONDUCTING TESTING

A. Conform to laboratory sampling and testing methods specified in individual Specification sections to the latest issues of ASTM standards, TxDOT methods, TCEQ, or other recognized test standards as approved by the Engineer.

B. Requirements of this Section shall also apply to those tests for approval of materials, for mix designs, and for quality control of materials as performed by employed testing laboratories.

END OF SECTION

PART 1 GENERAL

1.01 SECTION INCLUDES

A. This section governs for furnishing temporary facilities that are considered to be necessary for proper execution and coordination of the Work. Contractor shall furnish the items specified herein and other facilities which the Contractor deems necessary for protection of persons and property.

1.02 UTILITIES

A. Contractor may use water available from the City during construction, and costs will be paid by the Owner provided the Contractor is not wasteful or extravagant in usage. During periods of low pressure or water emergencies Contractor shall restrict water consumption. If the Contractor uses water from unmetered sources (i.e. fire hydrants), Contractor to obtain water meter from the Owner for accountability purposes. Contractor shall be responsible for all temporary service connections for water service as required to execute the Work. The costs of all temporary connections will be borne by the Contractor.

B. Contractor to arrange and pay for all electrical connections and usage as required for the Work.

C. Restroom facilities are not available at the Site. Contractor shall provide adequate temporary facilities for workers. Enclose sanitary facilities. Pit-type toilets are not permitted. No discharge will be allowed from these facilities. Collect and store sewage and waste so as not to cause nuisance or health problems. Haul sewage and waste off-site and properly dispose in accordance with applicable regulations.

1.03 ACCESS AND PARKING

A. All parking must be on done on Owner’s property with shuttle services provided to construction site. Alternatively, parking on construction site may be allowed with property owner written authorization. Contractor shall; however, be responsible for maintenance of access during the construction period. This will be coordinated with the Engineer at the Pre-Construction Conference.

B. Areas used for parking of vehicles and equipment shall be maintained at the Contractor's expense. If damage occurs due to the Contractor’s vehicles or equipment, site restoration must be completed at the Contractor’s expense and prior to processing the Final Pay Application.

C. Certain access and parking areas must remain accessible to fire department personnel.

1.04 SECURITY MEASURES

A. Protect the Work, materials, equipment, and property from loss, theft, damage, or vandalism. Protect Owner property used in performance of the Contract.

B. If existing fencing or barriers are breached or removed for purposes of construction, provide and maintain temporary security fencing equal to existing.

1.05 REMOVAL OF TEMPORARY FACILITIES

A. Prior to final inspection, Contractor shall remove all temporary facilities from the site and restore the area to a clean well graded condition.

1.06 PAYMENTS

A. No separate payment will be made to the Contractor for performance of the Work as described herein; the costs of all Work shall be incidental to the Contract.

PART 2 PRODUCTS – Not Used

PART 3 EXECUTION – Not Used

END OF SECTION

PART 1 GENERAL

1.01 SECTION INCLUDES

A. Mobilization of construction equipment and facilities onto the site and including payment for Contractor's Bonds and Insurance.

1.02 MEASUREMENT AND PAYMENT

A. Unit Price Contracts. If Contract is Unit Price Contract, measurement for mobilization is on a lump sum basis if modification is included as a separate line item.

B. Stipulated Price (Lump Sum) Contract. If Contract is Stipulated Price Contract, payment for the Work in this Section is included in total Stipulated Price.

C. Total cost for Mobilization will be defined in Section 004200 – Bid Form or approved with the Schedule of Values.

D. Mobilization payments will be included in monthly payment estimates upon written application by the Contractor subject to the following provisions:

1. Authorization for payment of 100 percent of that portion of the Contract Price designated for mobilization will be made if all of the following items are acceptable to the Engineer, as applicable:

    a. Schedule of Values (Section 012920).

    b. Construction Photographs (Section 013233).

    c. Construction Schedule (Section 013216).

    d. Submittal Schedule (Section 013300).

    e. Temporary Facilities (Section 015000).

    f. Other applicable items established by the Engineer in the Contract Documents.

2. Mobilization payments will be subject to retainage amounts.

PART 2 PRODUCTS – Not Used

PART 3 EXECUTION – Not Used

END OF SECTION

PART 1 GENERAL

1.01 SECTION INCLUDES

A. Installation of reinforced filter fabric barriers for erosion and sediment control used during construction and until the final development of the site. Reinforced filter fabric barriers are used to retain sedimentation in channelized flow areas.

1.02 MEASUREMENT AND PAYMENT

A. Filter fabric barrier will be measured by the linear foot of completed and accepted filter fabric barrier between the limits of the beginning and ending steel fence posts. Filter fabric barrier, measured as stated, will be paid for at the Unit Price bid for Reinforced Filter Fabric Barrier, Complete in Place.

B. Stipulated Price (Lump Sum) Contracts. If Contract is a Stipulated Price Contract, include payment for work under this Section in the total Stipulated Price.

C. Payment for filter fabric barrier will include and be full compensation for all labor, equipment, materials, supervision, and incidental expenses for construction of these items, complete in place, including, but not limited to protection of trees, maintenance requirements, repair and replacement of damaged sections, removal of sediment deposits, and removal of erosion and sediment control systems at the end of construction.

1.03 SUBMITTALS

A. Manufacturer's catalog sheets and other product data on geotextile fabrics in accordance with Section 013300 – Submittal Procedures.

PART 2 PRODUCTS

2.01 FILTER FABRIC

A. Provide woven or nonwoven geotextile filter fabric made of either polypropylene, polyethylene, ethylene, or polyamide material.

B. Geotextile fabric shall have a minimum grab strength of 100 psi in any principal direction (ASTM D-4632), Mullen burst strength exceeding 200 psi (ASTM D-3786), and the equivalent opening size between 50 and 140.

C. Filter fabric material shall contain ultraviolet inhibitors and stabilizers to provide a minimum of 6 months of expected usable construction life at a temperature range of 0 degrees F to 120 degrees F.

2.02 FENCING

A. Provide woven galvanized steel wire fence with minimum thickness of 12 gauge.

B. Woven wire shall be galvanized 2-inch by 4-inch welded wire fabric, 12 gauge.

PART 3 EXECUTION

3.01 PREPARATION AND INSTALLATION

A. Provide erosion and sediment control systems at the locations shown on the Drawings. Such systems shall be of the type indicated and shall be constructed in accordance with the requirements shown on the Drawings and specified in this Section.

B. No clearing and grubbing or rough cutting shall be permitted until erosion and sediment control systems are in place, other than site work specifically directed by the Engineer to allow soil testing and surveying.

C. Maintain existing erosion and sediment control systems located within the project site until acceptance of the project or until directed by the Engineer to remove and discard the existing system.

D. Regularly inspect and repair or replace damaged components of the reinforced filter fabric barrier as specified in this Section. Unless otherwise directed, maintain the erosion and sediment control systems until the project area stabilization is accepted by the Owner. Remove erosion and sediment control systems promptly when directed by the Engineer. Discard removed materials off site.

E. Remove sediment deposits and dispose of them at the designated spoil site for the project. If a project spoil site is not designated on the Drawings, dispose of sediment off site at a location not in or adjacent to a stream or floodplain. Off-site disposal is the responsibility of the Contractor. Sediment to be placed at the project site should be spread evenly throughout the site, compacted and stabilized. Sediment shall not be allowed to flush into a stream or drainage way. If sediment has been contaminated, it shall be disposed of in accordance with existing federal, state, and local rules and regulations.

F. Equipment and vehicles shall be prohibited by the Contractor from maneuvering on areas outside of dedicated rights-of-way and easements for construction. Damage caused by construction traffic to erosion and sediment control systems shall be repaired immediately.

3.02 CONSTRUCTION METHODS

A. Provide filter fabric barriers in accordance with the Drawing detail for Silt Fence. Filter Fabric barrier systems shall be installed in such a manner that surface runoff will percolate through the system in sheet flow fashion and allow sediment to be retained and accumulated.

B. Attach the woven wire support to heavy duty T-Post at least 12-inches into the ground at a slight angle towards the flow. Attach the welded wire mesh to the T-Post with 11 ½ gauge T-Post clips.

C. Trench in the toe of the filter fabric barrier with a spade or mechanical trencher so that the downward face of the trench is flat and perpendicular to the direction of flow as shown on the Drawings. Lay filter fabric along the edges of the trench. Backfill and compact trench.

D. Reinforced filter fabric barrier shall have a height of 24 inches.

E. Provide the filter fabric in continuous rolls and cut to the length of the fence to minimize the use of joints. When joints are necessary, splice the fabric together only at a support post with a minimum 6-inch overlap and seal securely.

F. Inspect the reinforced filter fabric barrier systems after each rainfall, daily during periods of prolonged rainfall, and at a minimum once each week. Repair or replace damaged sections immediately. Remove sediment deposits when silt reaches a depth one-third the height of the barrier or 6 inches, whichever is less.

END OF SECTION

PART 1 GENERAL

1.01 SECTION INCLUDES

A. Installation of erosion and sediment control for stabilized construction exits used during construction and prior to final development of site.

1.02 MEASUREMENT AND PAYMENT

A. Unit Price Contracts. If Contract is Unit Price Contract, payment for work in this Section will be based on the following:

1. Stabilized construction roads, parking areas, exits and truck-washing areas. No separate payment will be made for street cleaning. Include cost of work for street cleaning under related Specification section.

B. Stipulated Price (Lump Sum) Contracts. If Contract is a Stipulated Price Contract, include payment for work under this Section in the total Stipulated Price.

1.03 SUBMITTALS

A. Conform to requirements of Section 013300 – Submittal Procedures.

B. Submit manufacturers catalog sheets and other Product Data on geotextile fabric.

C. Submit sieve analysis of aggregates conforming to requirements of this Specification.

PART 2 PRODUCTS

2.01 GEOTEXTILE FABRIC

A. Refer to Section GC 6.

2.02 COARSE AGGREGATES

A. Refer to Section GC 6.

PART 3 EXECUTION

3.01 PREPARATION AND INSTALLATION

A. Provide stabilized construction roads and exits at construction, staging, parking, storage, and disposal areas to keep street clean of mud carried by construction vehicles and equipment. Construct erosion and sediment controls in accordance with the Drawings and Specification requirements.

B. Do not clear grub or rough cut until erosion and sediment control systems are in place, unless approved by the Engineer to allow soil testing and surveying.

C. Maintain existing construction site erosion and sediment control systems until acceptance of the Work or until removal of existing systems is approved by the Engineer.

D. Regularly inspect, repair or replace components of stabilized construction exits. Unless otherwise directed, maintain stabilized construction roads and exits until the Owner accepts the Work. Remove stabilized construction roads and exits promptly when directed by the Engineer. Discard removed materials off-site.

E. Remove and dispose of sediment deposits at designated spoil site for Project. If a spoil site is not designated on the Drawings, dispose of sediment off-site at a location not in or adjacent to stream or flood plain. Assume responsibility for off-site disposal.

F. Spread compacted and stabilized sediment evenly throughout site. Do not allow sediment to flush into streams or drainage ways. Dispose of contaminated sediment in accordance with existing federal, state, and local rules and regulations.

G. Prohibit equipment and vehicles from maneuvering on areas outside of dedicated rights-of-way and easements for construction. Immediately repair damage to erosion and sediment control systems caused by construction traffic.

H. Conduct construction operations in conformance with erosion control requirements.

3.02 CONSTRUCTION METHODS

A. Provide stabilized access roads, subdivision roads, parking areas, and other on-site vehicle transportation routes where shown on the Drawings.

B. Provide stabilized construction exits and truck washing areas, when approved by the Engineer, of sizes and at locations shown on the Drawings or as specified in this Section.

C. Clean tires to remove sediment on vehicles leaving construction areas prior to entering public right-of-ways. Construct truck washing areas needed to remove sediment. Wash trucks on stabilized areas that drain into drainage systems protected by erosion and sediment control measures.

D. Details for stabilized construction exits are shown on the Drawings. Construct other stabilized areas to same requirements. Place geotextile fabric as a permeable separator to prevent mixing of coarse aggregate with underlaying soil. Limit exposure of geotextile fabric to elements between laydown and cover to a maximum 14 days to minimize potential damage.

E. Grade roads and parking areas to provide sufficient drainage away from stabilized areas. Use sandbags, gravel, boards, or similar materials to prevent sediment from entering public right-of-ways, receiving streams or storm water conveyance systems.

F. Inspect and maintain stabilized areas daily. Provide periodic top dressing with additional coarse aggregates to maintain required depth. Repair and clean out damaged control systems used to trap sediment. Immediately remove spilled, dropped, washed, or tracked sediment from public right-of-ways.

G. Maintain lengths of stabilized areas as shown on the Drawings or a minimum of length of 50 feet and a minimum width of 12-feet. Maintain a minimum thickness of 8 inches. Maintain minimum widths at all points of ingress or egress.

H. Stabilized construction entrance shall be graded to drain towards the existing roadway at a two percent slope.

I. Stabilize other areas with the same thickness, and width of coarse aggregate required for stabilized construction exits, except where shown otherwise on the Drawings.

J. Stabilized areas may be widened or lengthened to accommodate truck washing areas when authorized by the Engineer.

K. Clean street daily before end of workday. When excess sediments have tracked onto streets, Engineer may direct the Contractor to clean street as often as necessary. Remove and legally dispose of sediments.

L. Use other erosion and sediment control measures to prevent sediment runoff during rain periods and non-working hours and when storm discharges are expected.

END OF SECTION

PART 1 GENERAL

1.01 SECTION INCLUDES

A. Dewatering, depressurizing, draining, and maintaining trenches, shaft excavations, structural excavations and foundation beds in stable condition, and controlling ground water conditions for tunnel excavations.

B. Protecting work against surface runoff and rising floodwaters.

C. Trapping suspended sediment in the discharge from the surface and ground water control systems.

1.02 MEASUREMENT AND PAYMENT

A. UNIT PRICES

1. When noted, dewatering of trench or excavation during course of project shall be measured per linear foot and paid for at the Contract Unit Price for dewatering, when directed to perform such work by the Engineer. Dewatering must be fully detailed in submittal and submittal must be approved prior to performing dewatering work before payment will be made for dewatering. No payment will be made for work unless directed to perform work by the Engineer.

2. Presence of a pump on project does not constitute dewatering for payment under Bid Item.

3. No separate payment will be made for groundwater control associated with augering, tunnels or casing. Include cost in Unit Price for augering.

4. Refer to Section 012700 – Measurement and Payment for unit price procedures.

B. Stipulated Price (Lump Sum) Contract. If Contract is a Stipulated Price Contract, include payment for work under this section in the total Stipulated Price.

1.03 DEFINITIONS

A. Ground water control system: system used to dewater and depressurize water-bearing soil layers.

1. Dewatering: lowering the water table and intercepting seepage that would otherwise emerge from slopes or bottoms of excavations, or into tunnels and shafts; and disposing of removed water. Intent of dewatering is to increase stability of tunnel excavations and excavated slopes, prevent dislocation of material from slopes or bottoms of excavations, reduce lateral loads on sheeting and bracing, improve excavating and hauling characteristics of excavated material, prevent failure or heaving of bottom of excavations, and to provide suitable conditions for placement of backfill materials and construction of structures and other installations.

2. Depressurization: includes reduction in piezometric pressure within strata not controlled by dewatering alone, necessary to prevent failure or heaving of excavation bottom or instability of tunnel excavations.

B. Excavation drainage: includes keeping excavations free of surface and seepage water.

C. Surface drainage: includes use of temporary drainage ditches and dikes and installation of temporary culverts and sump pumps with discharge lines necessary to protect the Work from any source of surface water.

D. Monitoring facilities for ground water control system: includes piezometers, monitoring wells and flow meters for observing and recording flow rates.

1.04 PERFORMANCE REQUIREMENTS

A. Conduct subsurface investigations to identify groundwater conditions and to provide parameters for design, installation, and operation of groundwater control systems. Submit proposed method and spacing of readings for review prior to obtaining water level readings.

B. Design ground water control system to produce the following results:

1. Effectively reduce hydrostatic pressure affecting:

a. Excavations.

b. Tunnel excavation, face stability or seepage into tunnels.

2. Develop substantially dry and stable subgrade for subsequent construction operations.

3. Preclude damage to adjacent properties, buildings, structures, utilities, installed facilities and other work.

4. Prevent loss of fines, seepage, boils, quick condition, or softening of foundation strata.

5. Maintain stability of sides and bottom of excavations.

C. Provide ground water control systems that include single-stage or multiple-stage well point systems, eductor and ejector-type systems, deep wells, or combinations of these equipment types.

D. Provide drainage of seepage water and surface water, as well as water from other sources entering excavation. Excavation drainage may include placement of drainage materials, crushed stone and filter fabric, together with sump pumping.

E. Provide ditches, berms, pumps and other methods necessary to divert and drain surface water from excavation and other work areas.

F. Locate ground water control and drainage systems so as not to interfere with utilities, construction operations, adjacent properties, or adjacent water wells.

G. Assume sole responsibility for ground water control systems and for any loss or damage resulting from partial or complete failure of protective measures and settlement or resultant damage caused by ground water control operations. Modify ground water control systems or operations if they cause or threaten to cause damage to new construction, existing site improvements, adjacent property, adjacent water wells, or potentially contaminated areas. Repair damage caused by ground water control systems or resulting from failure of system to protect property as required.

H. Install an adequate number of piezometers installed at proper locations and depths, necessary to provide meaningful observations of conditions affecting excavation, adjacent structures and water wells.

I. Install environmental monitoring wells at proper locations and depths necessary to provide adequate observations of hydrostatic conditions and possible contaminant transport from contamination sources into work area or ground water control system.

1.05 SUBMITTALS

A. Conform to requirements of Section 013300 – Submittals Procedures.

B. Submit Ground Water and Surface Water Control Plan for review by the Engineer prior to start of excavation work. Include the following:

1. Results of subsurface investigations and description of extent and characteristics of water bearing layers subject to ground water control.

2. Names of equipment Suppliers and installation Subcontractors.

3. Description of proposed ground water control systems indicating arrangement, location, depth and capacities of system components, installation details and criteria and operation and maintenance procedures.

4. Description of proposed monitoring facilities indicating depths and locations of piezometers and monitoring wells, monitoring installation details and criteria, type of equipment and instrumentation with pertinent data and characteristics.

5. Description of proposed filters including types, sizes, capacities and manufacturer's application recommendations.

6. Design calculations demonstrating adequacy of proposed systems for intended applications. Define potential area of influence of ground water control operation near contaminated areas.

7. Operating requirements, including piezometric control elevations for dewatering and depressurization.

8. Excavation drainage methods including typical drainage layers, sump pump application and other means.

9. Surface water control and drainage installations.

10. Proposed methods and locations for disposing of removed water.

C. Submit following records upon completion of initial installation:

1. Installation and development reports for well points, eductors, and deep wells.

2. Installation reports and baseline readings for piezometers and monitoring wells.

3. Baseline analytical test data of water from monitoring wells.

4. Initial flow rates.

D. Submit the following records weekly during control of ground and surface water operations:

1. Records of flow rates and piezometric elevations obtained during monitoring of dewatering and depressurization. Refer to Paragraph 3.02, Requirements for Eductor, Well Points, or Deep Wells.

2. Maintenance records for ground water control installations, piezometers and monitoring wells.

1.06 ENVIRONMENTAL REQUIREMENTS

A. Comply with requirements of agencies having jurisdiction.

B. Comply with Texas Commission on Environmental Quality regulations and Texas Water Well Drillers Association for development, drilling, and abandonment of wells used in dewatering system.

C. Obtain necessary permits from agencies with jurisdiction over use of groundwater and matters affecting well installation, water discharge, and use of existing storm drains and natural water sources. Since review and permitting process may be lengthy, take early action to obtain required approvals.

D. Monitor ground water discharge for contamination while performing pumping in vicinity of potentially contaminated sites.

PART 2 PRODUCTS

2.01 EQUIPMENT AND MATERIALS

A. Select equipment and materials necessary to achieve desired results for dewatering. Selected equipment and materials are subject to review by the Engineer through submittals required in Paragraph 1.05, Submittals.

B. Use experienced contractors, regularly engaged in ground water control system design, installation, and operation, to furnish and install and operate eductors, well points, or deep wells, when needed.

C. Maintain equipment in good repair and operating condition.

D. Keep sufficient standby equipment and materials available to ensure continuous operation, where required.

E. Portable Sediment Tank System: Standard 55-gallon steel or plastic drums, free of hazardous material contamination. Shop or field fabricate tanks in series with main inlet pipe, inter-tank pipes and discharge pipes, using quantities sufficient to collect sediments from discharge water.

PART 3 EXECUTION

3.01 GROUND WATER CONTROL

A. Perform necessary subsurface investigation to identify water bearing layers, piezometric pressures and soil parameters for design and installation of ground water control systems. Perform pump tests, if necessary to determine draw down characteristics. Present results in the Ground Water and Surface Water Control Plan submittal.

B. Provide labor, material, equipment, techniques and methods to lower, control and handle ground water in manner compatible with construction methods and site conditions. Monitor effectiveness of installed system and its effect on adjacent property.

C. Install, operate, and maintain ground water control systems in accordance with the Ground Water and Surface Water Control Plan. Notify the Engineer in writing of changes made to accommodate field conditions and changes to the Work. Provide revised drawings and calculations with notification.

D. Provide continuous system operation, including nights, weekends, and holidays. Arrange appropriate backup if electrical power is primary energy source for dewatering system.

E. Monitor operations to verify systems lower ground water piezometric levels at rate required to maintain dry excavation resulting in stable subgrade for subsequent construction operations.

F. Depressurize zones where hydrostatic pressures in confined water bearing layers exist below excavations to eliminate risk of uplift or other instability of excavation or installed works. Define allowable piezometric elevations in the Ground Water and Surface Water Control Plan.

G. Removal of ground water control installations.

1. Remove pumping system components and piping when ground water control is no longer required.

2. Remove piezometers, including piezometers installed during design phase investigations and left for Contractor's use, upon completion of testing.

3. Remove monitoring wells when directed by the Engineer.

4. Grout abandoned well and piezometer holes. Fill piping that is not removed with cement-bentonite grout or cement-sand grout.

H. During backfilling, maintain water level a minimum of 5 feet below prevailing level of backfill. Do not allow the water level to cause uplift pressures in excess of 80 percent of downward pressure produced by weight of structure or backfill in place. Do not allow water levels to rise into cement-stabilized sand until at least 48 hours after placement.

I. Provide uniform pipe diameter for each pipe drain run constructed for dewatering. Remove pipe drains when no longer required. If pipe removal is impractical, grout connections at 50- foot intervals and fill pipe with cement bentonite grout or cement-sand grout after removal from service.

J. The extent of ground water control for structures with permanent perforated underground drainage systems may be reduced, for units designed to withstand hydrostatic uplift pressure. Provide a means to drain affected portions of underground systems, including standby equipment. Maintain drainage systems during construction operations.

K. Remove systems upon completion of construction or when dewatering and control of surface or ground water is no longer required.

L. Compact backfill for removed dewatering system to not less than 95 percent of maximum dry density in accordance with ASTM.

M. Foundation Slab: Maintain saturation line at least 3 feet below lowest elevations where concrete is to be placed. Drain foundations in areas where concrete is to be placed before placing reinforcing steel. Keep free from water for 3 days after concrete is placed.

3.02 REQUIREMENTS FOR EDUCTOR, WELL POINTS, OR DEEP WELLS

A. For aboveground piping in ground water control system, include a 12-inch minimum length of clear, transparent piping between each eductor well or well point and discharge header to allow visual monitoring of discharge from each installation.

B. Install sufficient piezometers or monitoring wells to show that trench or shaft excavations in water bearing materials are pre-drained prior to excavation. Provide separate piezometers for monitoring of dewatering and for monitoring of depressurization. Install piezometers and monitoring wells for tunneling as appropriate for selected method of work.

C. Install piezometers or monitoring wells at least one week in advance of the start of associated excavation.

D. Dewatering may be omitted for portions of under drains or other excavations, where auger borings and piezometers or monitoring wells show that soil is pre-drained by existing systems and that ground water control plan criteria are satisfied.

E. Replace installations that produce noticeable amounts of sediments after development.

F. Provide additional ground water control installations, or change method of control if, ground water control plan does not provide satisfactory results based on performance criteria defined by plan and by specifications. Submit revised plan according to Paragraph 1.05, Submittals.

3.03 SEDIMENT TRAPS

A. Install sediment tank as shown on approved plan.

B. Inspect daily and clean out tank when one-third of sediment tank is filled with sediment.

3.04 SEDIMENT SUMP PIT

A. Install sediment sump pits as shown on approved plan.

B. Construct standpipe by perforating 12-inch to 24-inch diameter corrugated metal or PVC pipe.

C. Extend standpipe 12 inches to 18 inches above lip of pit.

D. Convey discharge of water pumped from standpipe to sediment trapping device.

E. Fill sites of sump pits, compact to density of surrounding soil and stabilize surface when construction is complete.

3.05 EXCAVATION DRAINAGE

A. Use excavation drainage methods if well-drained conditions can be achieved. Excavation drainage may consist of layers of crushed stone and filter fabric, and sump pumping, in combination with sufficient ground water control wells to maintain stable excavation and backfill conditions.

3.06 MAINTENANCE AND OBSERVATION

A. Conduct daily maintenance and observation of piezometers or monitoring wells while ground water control installations or excavation drainage is operating at the site, or water is seeping into tunnels, and maintain systems in good operating condition.

B. Replace damaged and destroyed piezometers or monitoring wells with new piezometers or wells as necessary to meet observation schedules.

C. Cut off piezometers or monitoring wells in excavation areas where piping is exposed, only as necessary to perform observation as excavation proceeds. Continue to maintain and make specified observations.

D. Remove and grout piezometers inside or outside of excavation area when ground water control operations are complete. Remove and grout monitoring wells when directed by the Engineer.

3.07 MONITORING AND RECORDING

A. Monitor and record average flow rate of operation for each deep well, or for each wellpoint or eductor header used in dewatering system. Also, monitor and record water level and ground water recovery. Record observations daily until steady conditions are achieved and twice weekly thereafter.

B. Observe and record elevation of water level daily as long as ground water control system is in operation, and weekly thereafter until the Work is completed or piezometers or wells are removed, except when the Engineer determines more frequent monitoring and recording are required. Comply with the Engineer's direction for increased monitoring and recording and take measures necessary to ensure effective dewatering for intended purpose.

3.08 SURFACE WATER CONTROL

A. Intercept surface water and divert it away from excavations through use of dikes, ditches, curb walls, pipes, sumps or other approved means. Requirement includes temporary works required to protect adjoining properties from surface drainage caused by construction operations.

B. Divert surface water and seepage water into sumps and pump it into drainage channels or storm drains, when approved by agencies having jurisdiction. Provide settling basins when required by agencies.

END OF SECTION

PART 1 GENERAL

1.01 SECTION INCLUDES

A. Options for making Product selections.

B. Procedures for proposing equivalent Products, including pre-approved, pre-qualified, and approved Products.

C. Requirements for transportation, delivery, handling, and storage of Products.

1.02 PRODUCTS

A. Products: Does not include machinery and equipment used for preparation, fabrication, conveying and erection of the Work. Products may also include existing materials or components designated for reuse.

B. For material and equipment specifically indicated or specified to be reused in the work:

1. Use special care in removal, handling, storage and reinstallation, to assure proper function in completed work.

2. Arrange for transportation, storage and handling of products which require off-site storage, restoration or renovation. Include cost in Unit Price for related items.

C. When the Contract Documents require that installation of work comply with manufacturer's printed Instructions and/or recommendations, obtain and distribute copies of such instructions to parties involved in installation, including two copies, to the Engineer. Maintain one set of complete instructions at job site during installation until completion.

D. Provide Products from the fewest number of manufacturers as practical, in order to simplify spare parts inventory and to allow for maximum interchangeability of components. For multiple components of the same size, type or application, use the same make and model of component throughout the Work.

1.03 SELECTION OPTIONS

A. Pre-approved Products: Construction products of certain manufacturers or Suppliers designated in the Specifications as "pre-approved." Owner maintains a list of pre-approved products. Pre-approved Products for this Project are designated as pre-approved in the Specifications. Products of other manufacturers or suppliers are not acceptable for this Project and will not be considered under the submittal process for approving alternate products.

B. Pre-qualified Products: Construction products of certain manufacturers or Suppliers designated in the Specifications as "pre-qualified." Pre-qualified Products for this Project are designated as pre-qualified in the Specifications. Products of other manufacturers or suppliers are not acceptable for this Project and will not be considered under the submittal process for approving alternate products.

C. Approved Products: Construction products of certain manufacturers or Suppliers designated in the Specifications followed by words "or approved equal." Approval of alternate products not listed in the Specifications may be obtained through provisions for product options and substitutions in Section 007200 – General Conditions, and by following submittal procedures. The procedure for approval of alternate products is not applicable to pre-approved or pre-qualified products.

D. Product Compatibility: To the maximum extent possible, provide Products that are of the same type or function from a single manufacturer, make, or source. Where more than one choice is available, select Product that is compatible with other Products already selected, specified, or in use by the Owner.

1.04 CONTRACTOR'S RESPONSIBILITY

A. Responsibility related to Product options and substitutions is defined in Section 007200 – General Conditions.

B. Furnish information the Engineer deems necessary to judge equivalency of alternate Product.

C. Pay for laboratory testing, as well as any other review or examination costs, needed to establish equivalency between products in order to obtain information upon which the Engineer can base a decision.

D. If the Engineer determines alternate product is not equal to that named in the Specifications, Furnish one of the specified Products.

1.05 OWNER REVIEW

A. Use alternate Products only when approved in writing by the Engineer. The Engineer’s determination regarding acceptance of proposed alternate Product is final.

B. Alternate Products shall be accepted if Products are judged by the Engineer to be equivalent to specified Product or to offer substantial benefit to the Owner.

C. Owner retains the right to accept any Product deemed advantageous to the Owner, and similarly, to reject any product deemed not beneficial to the Owner.

1.06 SUBSTITUTION PROCEDURE

A. Collect and assemble technical information applicable to the proposed Product to aid in determining equivalency as related to the approved Product specified.

B. Submit a written request for a construction Product to be considered as an alternate Product.

C. Submit Product information after the effective date of the Contract and within the time period allowed for substitution submittals given in Section 007200 – General Conditions. After the submittal period has expired, requests for alternate Products shall be considered only when specified Product becomes unavailable because of conditions beyond the Contractor's control.

D. Submit request for alternate Product approval as per Section 013300 – Submittal Procedures include the following information:

1. Complete data substantiating compliance of proposed substitution with the Contract.

2. For Products:

   a. Product identification, including manufacturer's name and address.

   b. Manufacturer's literature with Product description, performance and test data, and reference standards.

   c. Samples, as applicable.

   d. Name and address of similar projects on which Product was used and date of installation. Include names of owner, design consultant, and installing contractor.

3. For construction methods:

   a. Detailed description of proposed method.

   b. Drawings illustrating methods.

4. Itemized comparison of proposed substitution with Product or method specified.

5. Data relating to changes in Construction Schedule.

6. Relation to separate contracts, if any.

7. Accurate cost data on proposed substitution in comparison with Product or method specified.

8. Other information requested by the Engineer.

E. Approved alternate Products will be subject to the same review process as the specified Product would have been for Shop Drawings, Product Data, and Samples.

1.07 TRANSPORTATION

A. Make arrangements for transportation, delivery, and handling of Products required for timely completion of the Work.

B. Transport and handle Products in accordance with manufacturer’s instructions and/or recommendations.

C. Consign and address shipping documents to proper party giving Project Name and its complete street address. Shipments shall be delivered to the Contractor.

1.08 DELIVERY

A. Arrange deliveries of Products to accommodate short-term site completion schedules and in ample time to facilitate inspection prior to Installation. Avoid deliveries that cause lengthy storage or overburden of limit storage space.

B. Coordinate deliveries to avoid conflict with the Work and conditions at the site and to accommodate the following:

1. Work of other contractors or the Owner.

2. Limitations of storage space.

3. Availability of equipment and personnel for handling Products.

4. The Owner's use of premises.

C. Have Products delivered to the site in manufacturer's original, unopened, labeled containers.

D. Immediately upon delivery, inspect shipment to assure:

1. Product complies with requirements of the Contract.

2. Quantities are correct.

3. Containers and packages are intact; labels are legible.

4. Products are properly protected and undamaged.

1.09 PRODUCT HANDLING

A. Coordinate off-loading of Products delivered to the site. If necessary during construction, move and relocate stored Products at no additional cost to the Owner.

B. Provide equipment and personnel necessary to handle Products, including those provided by the Owner, by methods to prevent damage to Products or packaging.

C. Provide additional protection during handling as necessary to prevent breaking, scraping, marring, or otherwise damaging Products or surrounding areas.

D. Handle Products by methods to prevent over-bending or overstressing.

E. Lift heavy components only at designated lifting points.

F. Handle Products in accordance with manufacturer's recommendations.

G. Do not drop, roll, or skid Products off delivery vehicles, hand-carry or use suitable materials handling equipment.

PART 2 PRODUCTS – Not Used

PART 3 EXECUTION – Not Used

END OF SECTION

PART I GENERAL

1.01 SECTION INCLUDES

A. Requirements for surveying performed by Contractor.

B. Engineer to provide control points unless noted otherwise. Engineer can provide construction staking; to be discussed with Owner and Contractor.

1.02 QUALITY CONTROL

A. Conform to State of Texas laws for surveys requiring licensed surveyors. Employ a surveyor acceptable to the Engineer.

1.03 MEASUREMENT AND PAYMENT

A. UNIT PRICES

1. No separate payment will be made for field surveying. Include cost in Unit Price for related items.

1.04 SUBMITTALS

A. Conform to requirements of Section 013300 – Submittal Procedures.

B. Submit documentation verifying accuracy of survey work on request.

C. Submit certificate signed by the Surveyor, that elevations and locations of the Work are in conformance with the Contract, if requested.

1.05 PROJECT RECORD DOCUMENTS

A. Maintain a complete and accurate log of control and survey work as it progresses.

B. Prepare a certified survey setting forth dimensions, locations, angles, and elevations of construction and site work upon completion of each major component of project.

1.06 EXAMINATION

A. Engineer will provide survey control points. Contractor to verify locations of survey control points prior to starting the Work.

B. Notify the Engineer immediately if any discrepancies are discovered.

1.07 SURVEY REFERENCE POINTS

A. Engineer will establish survey control points as provided in Section 007200 – General Conditions and as indicated on the Drawings.

B. Locate and protect survey control points prior to starting site work; preserve permanent reference points during construction.

C. Notify the Engineer a minimum of 48 hours before relocation of reference points as needed due to changes in grades or other reasons.

D. Promptly report loss or destruction of control points to the Engineer.

E. Reimburse the Owner for cost to reestablish permanent control points disturbed during construction operations.

1.08 SURVEY REQUIREMENTS

A. Utilize recognized engineering survey practices.

B. Establish a minimum of two temporary benchmarks on site, referenced to established control points. Record horizontal and vertical location data of TBMs on As Built Drawings, if not already provided.

C. Establish elevations, lines and levels to provide quantities required for measurement and payment and for appropriate controls for the Work. Locate and lay out the following with appropriate instruments:

1. Site improvements including grading, fill and topsoil placement, utilities, and footings and slabs.

2. Grid or axis for structures.

3. Building foundation, column locations, and ground floor elevations.

D. Periodically verify layouts.

PART 2 PRODUCTS – Not Used

PART 3 EXECUTION – Not Used

END OF SECTION

PART 1 GENERAL

1.01 SECTION INCLUDES

A. Waste material disposal consists of disposal of trees, stumps, logs, brush, roots, grass, vegetation, humus, concrete equipment, piping, miscellaneous metals, grit, blasting media, rubbish and other objectionable matter from operations such as clearing and grubbing, excavation, grading and demolition. Unless otherwise specified, the Contractor is responsible for removal and disposal of waste material.

1.02 PAYMENT

A. No separate payment will be made. Include cost of work in contract bid prices.

PART 2 PRODUCTS

2.01 PRODUCTS, EQUIPMENT AND MATERIALS

A. Specific products are not required. Use equipment and materials necessary to properly complete disposal of waste materials.

B. Obtain approval for equipment and materials before beginning disposal of waste materials.

PART 3 EXECUTION

3.01 EXECUTION

A. All waste material becomes the property of the Contractor and is to be removed from the worksite and legally disposed of in a manner not to damage the Owner. All rules of the Texas Commission on Environmental Quality, Texas Air Control Board, and U.S. Environmental Protection Agency shall be followed in the disposal of waste material.

B. If regulations require, provide "cradle-to-grave" documentation of the disposal including manifests.

END OF SECTION

PART 1 GENERAL

1.01 SECTION INCLUDES

A. Final clean-up and site restoration affected by the Work on public or private property, including pavement, esplanades, sidewalks, driveways, fences, lawns and landscaping or any other item disturbed by the Work or Contractor neglect.

1.02 MEASUREMENT AND PAYMENT

A. No separate measurement and payment for work performed under this Section. Contractor shall include the cost for this work in the Contract Bid Price for the Work of which this is a component part.

1.03 SUBMITTALS

A. Submit product data as required for final clean-up and site restoration in accordance with Section 013300 – Submittal Procedures.

1.04 SCHEDULING

A. Restoration shall be completed immediately after the Work is completed.

B. Phased Construction: Commencement of subsequent Phase will follow scheduling of site restoration of prior Phase.

C. Construction of Projects with no Phases listed in Section 011100 – Additional Requirements: Limit work to a maximum of 50% of total project linear feet or as limited in other specifications, whichever is greater, of right-of-way and easement. Commence work in additional right-of-way or easement after completion of site restoration.

PART 2 PRODUCTS

2.01 MATERIALS

A. Specified materials include, but are not limited to, pavement, sidewalks, driveways, seeding, sodding, trees, shrubs, plants or any other material relating to site restoration.

PART 3 EXECUTION

3.01 PREPARATORY WORK

A. Provide clean-up and restoration crews to work closely behind construction crews, and where necessary, during testing, restoration and transfer of service, abandonment of lines, backfill and surface restoration.

3.02 CLEANING

A. Remove debris and trash to maintain a clean and orderly site in accordance with the requirements of Section 007200 – General Conditions and Section 017419 – Waste Material Disposal.

3.03 LANDSCAPING AND FENCES

A. After obtaining approval from the Engineer of satisfactory site restoration, Contractor shall restore turf in all areas disturbed during construction.

B. All fences, walks, driveways or other permanent facilities are to be completed in place before turf restoration.

C. Fence Replacement.

1. Replace removed, *relocated* or damaged fencing to equal or better condition than existed prior to construction, including concrete footings and mow strips. Provide new wood posts, top and bottom railing and panels as required.

2. Metal fencing material, not damaged by the Work, may be reused.

3. Remove and dispose of damaged or substandard material per Section 017419 – Waste Material Disposal.

END OF SECTION

PART 1 GENERAL

1.01 SECTION INCLUDES

A. Final clean-up and site restoration affected by the Work on public or private property, including pavement, esplanades, sidewalks, driveways, fences, lawns and landscaping or any other item disturbed by the Work or Contractor neglect.

1.02 MEASUREMENT AND PAYMENT

A. No separate measurement and payment for work performed under this Section. Contractor shall include the cost for this work in the Contract Bid Price for the Work of which this is a component part.

1.03 SUBMITTALS

A. Submit product data as required for final clean-up and site restoration in accordance with Section 013300 – Submittal Procedures.

1.04 SCHEDULING

A. Restoration shall be completed immediately after the Work is completed.

B. Phased Construction: Commencement of subsequent Phase will follow scheduling of site restoration of prior Phase.

C. Construction of Projects with no Phases listed in Section 011100 – Additional Requirements: Limit work to a maximum of 50% of total project linear feet or as limited in other specifications, whichever is greater, of right-of-way and easement. Commence work in additional right-of-way or easement after completion of site restoration.

PART 2 PRODUCTS

2.01 MATERIALS

A. Specified materials include, but are not limited to, pavement, sidewalks, driveways, seeding, sodding, trees, shrubs, plants or any other material relating to site restoration.

PART 3 EXECUTION

3.01 PREPARATORY WORK

A. Provide clean-up and restoration crews to work closely behind construction crews, and where necessary, during testing, restoration and transfer of service, abandonment of lines, backfill and surface restoration.

3.02 CLEANING

A. Remove debris and trash to maintain a clean and orderly site in accordance with the requirements of Section 007200 – General Conditions and Section 017419 – Waste Material Disposal.

3.03 LANDSCAPING AND FENCES

A. After obtaining approval from the Engineer of satisfactory site restoration, Contractor shall restore turf in all areas disturbed during construction.

B. All fences, walks, driveways or other permanent facilities are to be completed in place before turf restoration.

C. Fence Replacement.

1. Replace removed, *relocated* or damaged fencing to equal or better condition than existed prior to construction, including concrete footings and mow strips. Provide new wood posts, top and bottom railing and panels as required.

2. Metal fencing material, not damaged by the Work, may be reused.

3. Remove and dispose of damaged or substandard material per Section 017419 – Waste Material Disposal.

END OF SECTION

PART 1 GENERAL

1.01 SECTION INCLUDES

A. Procedures to establish date of Substantial Completion.

B. Closeout procedures for final submittals, Operations & Maintenance (O&M) Manual, warranties, spare parts and maintenance materials, as applicable.

1.02 SUBSTANTIAL COMPLETION

A. Comply with Section 007200 – General Conditions regarding date of Substantial Completion when the Contractor considers the Work, or portion thereof designated by the Engineer, to be substantially complete.

B. Insure the following items have been completed, when included in the Work, prior to presenting a request for Substantial Completion:

1. General clean up including pavement markings, transfer of services, successful testing and landscape.

2. O&M Manuals accepted by the Engineer; if required, prior to Start-up.

3. Operator training if required. Training will be conducted using O&M Manuals that have been accepted by the Engineer.

4. All applicable testing shall be completed by the Contractor and accepted by the Engineer.

C. Should the Engineer's inspection show failure of the Contractor to comply with requirements to obtain date of Substantial Completion, including those items in Paragraph 1.02B. of this section, Contractor shall complete or correct the items, before requesting another inspection by the Owner.

1.03 CLOSEOUT PROCEDURES

A. Comply with Section 007200 – General Conditions regarding final completion and final payment when the Work is complete and ready for the Engineer's final inspection.

B. Insure the following items have been completed, when included in the Work, prior to presenting a request for Final Completion:

1. Provide the Engineer final Contractor As-Built Drawings after Project Representative verification.

2. Complete or correct items on Punch List. New items will be addressed during warranty period.

C. Owner will occupy portions of the Work as specified in other sections.

1.04 FINAL CLEANING

A. Execute final cleaning prior to final inspection.

B. For facilities, clean interior and exterior glass and surfaces exposed to view; remove temporarylabels, stains and foreign substances, polish transparent and glossy surfaces, vacuum carpetedand soft surfaces.

C. Clean equipment and fixtures to sanitary condition.

D. Clean or replace filters of operating equipment.

E. Clean debris from roofs, gutters, down spouts, and drainage systems.

F. Clean site; sweep paved areas, and rake clean landscaped surfaces.

G. Remove waste and surplus materials, rubbish, and temporary construction facilities from sitefollowing final test of utilities and completion of the Work.

1.05 ADJUSTING

A. Adjust operating equipment to ensure smooth and unhindered operation.

1.06 OPERATION AND MAINTENANCE MANUAL

A. Submit O&M Manuals as noted in Section 013300 – Submittal Procedures and Section 017823 –Operations and Maintenance Manual.

1.07 WARRANTIES

A. Warranties are to be included in the Operation and Maintenance Manual.

B. Warranties shall commence in accordance with the requirements in Section 007200 – General Conditions.

1.08 SPARE PARTS AND MAINTENANCE MATERIALS

A. Provide Products, spare parts, maintenance and extra materials in quantities specified inindividual Specification sections; if required.

B. Deliver to a location as directed by the Engineer. Applicable items must be delivered prior toissuance of Certificate of Final Completion.

PART 2 PRODUCTS – Not Used

PART 3 EXECUTION – Not Used

END OF SECTION

PART 1 GENERAL

1.01 SECTION INCLUDES

A. Removing concrete paving, asphaltic concrete pavement, brick pavement and base courses.

B. Removing concrete curbs, concrete curbs and gutters, sidewalks and driveways.

C. Removing pipe culverts, sewers, and sewer leads.

D. Removing waterlines and water services lines including asbestos cement pipe per OSHA guidelines.

E. Removing existing inlets and manholes.

F. Removing and disposing of pre-stressed concrete beams and drill shafts.

G. Removing miscellaneous structures of concrete or masonry.

H. Removing existing wood and demolition debris.

1.02 MEASUREMENT AND PAYMENT

A. Unit Prices.

1. Payment for removing and disposing of asphaltic surfacing with or without base, regardless of thickness encountered, is on square yard basis measured between lips of gutters.

2. Payment for removing and disposing of reinforced concrete pavement, with or without asphalt overlay, regardless of its thickness, is on square yard basis measured from back-to-back of curbs. Payment includes concrete pavement, esplanade curbs, curbs and gutters, and paving headers.

3. Payment for removing and disposing of cement stabilized shell base course, with or without asphaltic surfacing, is on square yard basis.

4. Payment for removing and disposing of concrete sidewalks and driveways is on square yard basis.

5. Payment for removing and disposing of miscellaneous concrete and masonry is on cubic yard basis of structure in place.

6. Payment for removing and disposing of pipe culverts, sewers, and sewer leads, is on linear foot basis for each diameter and each material type of pipe removed.

7. Payment for removing and disposing of waterlines and water service lines including asbestos cement pipe is on linear foot basis for each diameter pipe and each material type of pipe removed.

8. Payment for removing and disposing of existing inlets is on unit price basis for each inlet removed.

9. Payment for removing and disposing of prestressed concrete piles and drill shafts is on linear foot basis.

10. Payment for removing and disposing of existing bridge, including piles and abutments to minimum of four (4) feet below ground level, is on a lump sum basis.

11. Payment for removing and disposing of existing manholes is on unit price basis for each manhole removed.

12. Payment for removing and disposing of miscellaneous wood and demolition debris is on cubic yard basis.

13. No payment for saw cutting of pavement, curbs, or curbs and gutters will be made under this section. Include cost of such work in unit prices for items listed in bid form requiring saw cutting.

14. No payment will be made for work outside maximum payment limits indicated on the Drawings, or for pavements or structures removed for Contractor's convenience.

    a. For utility installations: Match actual pavement replaced but no greater than maximum pavement replacement limits shown on the Drawings. Limits of measurement will be as shown on Street Cut Pavement Replacement Rules.

15. Refer to Section 012700 – Measurement and Payment for unit price procedures

B. Stipulated Price (Lump Sum). If Contract is Stipulated Price Contract, payment for work in this Section is included in total Stipulated Price.

1.03 REGULATORY REQUIREMENTS

A. Conform to applicable codes for disposal of debris.

B. Coordinate removal work with utility companies.

PART 2 PRODUCTS - Not Used

PART 3 EXECUTION

3.01 PREPARATION

A. Obtain advance approval from Engineer for dimensions and limits of removal work.

B. Identify known utilities below grade. Stake and flag locations.

3.02 PROTECTION

A. Protect following from damage or displacement:

1. Adjacent public and private property.

2. Trees, plants, and other landscape features designated to remain.

3. Utilities designated to remain.

4. Pavement and utility structures designated to remain.

5. Benchmarks, monuments, and existing structures designated to remain.

3.03 REMOVALS

A. Remove pavements and structures by methods that will not damage underground utilities. Do not use drop hammer near existing underground utilities.

B. Minimize amount of earth loaded during removal operations.

C. Where existing pavement is to remain, make straight saw cuts in existing pavement to provide clean breaks prior to removal. Do not break concrete pavement or base with drop hammer unless concrete or base has been saw cut to minimum depth of two (2) inches.

D. When street and driveway saw cut location is greater than one-half of pavement lane width, remove pavement for full lane width or to nearest longitudinal joint as directed by Engineer.

E. Remove sidewalks and curbs to nearest existing dummy, expansion, or construction joint.

3.04 BACKFILL

A. Backfill of removal areas shall be in accordance with requirements of Section 023170 – Excavation and Backfill for Structures.

END OF SECTION

PART 1 GENERAL

1.01 SECTION INCLUDES

A. Excavation, trenching, foundation, embedment, and backfill for installation of utilities, including manholes and other pipeline structures.

1.02 MEASUREMENT AND PAYMENT

A. Unit Prices

1. No additional payment will be made for trench excavation, embedment and backfill under this Section. Include cost in unit price for installed underground piping, sewer, conduit, or duct work.

2. No additional payment will be made for performing Critical Location exploratory excavation. Include cost for unit price for work requiring critical location.

3. Refer to Section 012700 – Measurement and Payment for unit price procedures.

B. Stipulated Price (Lump Sum). If Contract is Stipulated Price Contract, payment for Work in this Section is included in total Stipulated Price.

1.03 DEFINITIONS

A. Pipe Foundation: Suitable and stable native soils that are exposed at trench subgrade after excavation to depth of bottom of bedding as shown on the Drawings, or foundation backfill material placed and compacted in over-excavations.

B. Pipe Bedding: Portion of trench backfill that extends vertically from top of foundation up to level line at bottom of pipe, and horizontally from one trench sidewall to opposite sidewall.

C. Haunching: Material placed on either side of pipe from top of bedding up to springline of pipe and horizontally from one trench sidewall to opposite sidewall.

D. Initial Backfill: Portion of trench backfill that extends vertically from springline of pipe (top of haunching) up to level line 12 inches above top of pipe, and horizontally from one trench sidewall to opposite sidewall.

E. Pipe Embedment: Portion of trench backfill that consists of bedding, haunching and initial backfill.

F. Trench Zone: Portion of trench backfill that extends vertically from top of pipe embedment up to pavement subgrade or up to final grade when not beneath pavement.

G. Unsuitable Material: Unsuitable soil materials are the following:

1. Materials that cannot be compacted to required density due to gradation, plasticity, or moisture content.

2. Materials that contain large clods, aggregates, stones greater than four (4) inches in any dimension, debris, vegetation, waste or any other deleterious materials.

3. Materials that are contaminated with hydrocarbons or other chemical contaminants.

H. Suitable Material: Suitable soil materials are those meeting specification requirements and per the geotechnical report, if applicable. Materials mixed with lime or cement that can be compacted to required density and meeting requirements for suitable materials may be considered suitable materials, unless otherwise indicated.

I. Backfill: Suitable material meeting specified quality requirements placed and compacted under controlled conditions.

J. Ground Water Control Systems: Installations external to trench, such as well points, eductors, or deep wells. Ground water control includes dewatering to lower ground water, intercepting seepage which would otherwise emerge from side or bottom of trench excavation, and depressurization to prevent failure or heaving of excavation bottom. Refer to Section 015780 – Control of Ground and Surface Water.

K. Surface Water Control: Diversion and drainage of surface water runoff and rain water away from trench excavation. Rain water and surface water accidentally entering trench shall be controlled and removed as part of excavation drainage.

L. Excavation Drainage: Removal of surface and seepage water in trench by sump pumping and using drainage layer, as defined in ASTM D 2321, placed on foundation beneath pipe bedding or thickened bedding layer in wet trench.

M. Trench Conditions are defined with regard to stability of trench bottom and trench walls of pipe embedment zone. Maintain trench conditions that provide for effective placement and compaction of embedment material directly on or against undisturbed soils or foundation backfill, except where structural trench support is necessary.

1. Dry Stable Trench: Stable and substantially dry trench conditions exist in pipe embedment zone as result of typically dry soils or achieved by ground water control (dewatering or depressurization) for trenches extending below ground water level.

2. Stable Trench with Seepage: Stable trench in which ground water seepage is controlled by excavation drainage.

   a. Stable Trench with Seepage in Clayey Soils: Excavation drainage is provided in lieu of or to supplement ground water control systems to control seepage and provide stable trench subgrade in predominately clayey soils prior to bedding placement.

   b. Stable Wet Trench in Sandy Soils: Excavation drainage is provided in embedment zone in combination with ground water control in predominately sandy or silty soils.

3. Unstable Trench: Unstable trench conditions exist in pipe embedment zone if ground water inflow or high water content causes soil disturbances, such as sloughing, sliding, boiling, heaving or loss of density.

N. Sub-trench: Sub-trench is special case of benched excavation. Sub-trench excavation below trench shields or shoring installations may be used to allow placement and compaction of foundation or embedment materials directly against undisturbed soils. Depth of sub-trench depends upon trench stability and safety as determined by the Contractor.

O. Trench Dam: Placement of low permeability material in pipe embedment zone or foundation to prohibit ground water flow along trench.

P. Over-excavation and Backfill: Excavation of subgrade soils with unsatisfactory bearing capacity or composed of otherwise unsuitable materials below top of foundation as shown on the Drawings, and backfilled with foundation backfill material.

Q. Vacuum Excavation: An excavation technique performed by an experienced Subcontractor in which water or air jets used to slough off and vacuum away soil.

1.04 REFERENCES

A. ASTM C 12 – Standard Practice for Installing Vitrified Clay Pipe Lines

B. ASTM D 558 – Standard Test Methods for Moisture-Density Relations of Soil Cement Mixtures

C. ASTM D 698 – Standard Test Method for Laboratory Compaction Characteristics of Soil Using Standard Effort (12,400 ft-lb/ft)

D. ASTM D 1556 – Standard Test Method for Density and Unit Weight of Soil in Place by Sand-Cone Method

E. ASTM D 2321 – Standard Practice for Underground Installation of Thermoplastic Pipe for Sewers and Other Gravity Flow Applications

F. ASTM D 2487 – Standard Classification of Soils for Engineering Purposes

G. ASTM D 2922 – Standard Test Methods for Density of Soil and Soil- Aggregate in Place by Nuclear Methods (Shallow Depth)

H. ASTM D 3 017 – Standard Test Method for Water Content of Soil and Rock in Place by Nuclear Methods (Shallow Depth)

I. ASTM D 4318 – Standard Test Method for Liquid Limit, Plastic Limit, and Plasticity Index of Soils

J. TxDOT Tex-101-E – Preparing Soil and Flexible Base Materials for Testing

K. TxDOT Tex-110-E – Particle Size Analysis of Soils

L. ASTM C76 – Standard Specification for Reinforced Concrete Culverts, Storm Drain, and Sewer Pipe

1.05 SCHEDULING

A. Schedule work so that pipe embedment can be completed on same day that acceptable foundation has been achieved for each section of pipe installation, manhole, or other structures.

1.06 TESTS

A. Testing and analysis of backfill materials for soil classification and compaction during construction will be performed by an independent laboratory provided by the Owner in accordance with requirements of Section 014534 – Testing Laboratory Services and as specified in this Section.

B. Perform backfill material source qualification testing in accordance with requirements of Section 023200 – Utility Backfill Materials.

PART 2 PRODUCTS

2.01 EQUIPMENT

A. Perform excavation with hydraulic excavator or other equipment suitable for achieving requirements of this Section.

B. Use only hand-operated tamping equipment until minimum cover of 12 inches is obtained over pipes, conduits, and ducts. Do not use heavy compacting equipment until adequate cover is attained to prevent damage to pipes, conduits, or ducts.

PART 3 EXECUTION

3.01 STANDARD PRACTICE

A. Install flexible pipe, including "semi-rigid" pipe, to conform to standard practice described in ASTM D 2321, and as described in this Section. Where an apparent conflict occurs between standard practice and requirements of this Section, this Section governs.

B. Install rigid pipe to conform to standard practice described in ASTM C 12 or C76 as applicable, and as described in this Section. Where an apparent conflict occurs between standard practice and requirements of this Section, this Section governs.

3.02 PREPARATION

A. Immediately notify agency or company owning any existing utility line which is damaged, broken, or disturbed. Obtain approval from the Engineer and agency for any repairs or relocations, either temporary or permanent.

B. Install and operate necessary dewatering and surface-water control measures to conform to Section 015780 – Control of Ground and Surface Water. Provide stable trench to allow installation in accordance with Specifications.

C. Maintain permanent benchmarks, monumentation, and other reference points. Unless otherwise directed in writing, replace those which are damaged or destroyed in accordance with Section 017250 – Field Surveying.

3.03 CRITICAL LOCATION INVESTIGATION

A. Horizontal and vertical location of various underground lines shown on the Drawings, including but not limited to water lines, gas lines, storm sewers, sanitary sewers, telecommunication lines, electric lines or power ducts, pipelines, concrete and debris, are based on best information available but are only approximate locations. Unless otherwise approved by the Engineer at Critical Locations shown on the Drawings, perform vacuum excavation to field verify horizontal and vertical locations of such lines within zone two (2) feet vertically and four (4) feet horizontally of proposed work.

1. Verify location of existing utilities minimum of seven (7) working days in advance of pipe laying activities based on daily pipe laying rate or prior to beginning installation of auger pit or tunnel shaft. Use extreme caution and care when uncovering utilities designated by Critical Locate.

2. Notify the Engineer in writing immediately upon identification of obstruction. In event of failure to identify obstruction in minimum of seven (7) days, Contractor will not be entitled to extra cost for downtime including, but not limited to, payroll, equipment, overhead, demobilization and remobilization.

B. Notify involved utility companies of date and time that investigation excavation will occur and request that their respective utility lines be marked in field. Comply with utility or pipeline company requirements that their representative be present during excavation. Provide the Engineer with 48 hours notice prior to field excavation or related work.

3.04 PROTECTION

A. Protect trees, shrubs, lawns, existing structures, and other permanent objects outside of grading limits and within grading limits as designated on the Drawings, if applicable.

B. Protect and support above-grade and below-grade utilities which are to remain.

C. Restore damaged permanent facilities to pre-construction conditions unless replacement or abandonment of facilities is indicated on the Drawings.

D. Take measures to minimize erosion of trenches. Do not allow water to pond in trenches. Where slides, washouts, settlements, or areas with loss of density or pavement failures or potholes occur, repair, re-compact, and pave those areas at no additional cost to the Owner.

3.05 EXCAVATION

A. Except as otherwise specified or shown on the Drawings, install underground utilities in open cut trenches with vertical sides.

B. Perform excavation work so that pipe, conduit, and ducts can be installed to depths and alignments shown on the Drawings. Avoid disturbing surrounding ground and existing facilities and improvements.

C. Use sufficient trench width or benches above embedment zone for installation of well point headers or manifolds and pumps where depth of trench makes it uneconomical or impractical to pump from surface elevation. Provide sufficient space between shoring cross braces to permit equipment operations and handling of forms, pipe, embedment and backfill, and other materials.

D. Upon discovery of unknown utilities, badly deteriorated utilities not designated for removal, or concealed conditions, discontinue work at that location. Notify the Engineer and obtain instructions before proceeding.

E. Place sand or soil behind shoring or trench shield to prevent soil outside shoring from collapsing and causing voids under pavement. Immediately pack suitable material in outside voids following excavation to avoid caving of trench walls.

3.06 HANDLING EXCAVATED MATERIALS

A. Use only excavated materials, which are suitable as defined in this Section. Place material suitable for backfilling in stockpiles at distance from trench to prevent slides or cave-ins.

B. Do not place stockpiles of excess excavated materials on streets and adjacent properties. Protect backfill material to be used on site. Excavate trench so that pipe is centered in trench. Do not obstruct sight distance for vehicles utilizing roadway or detours with stockpiled materials.

3.07 TRENCH FOUNDATION

A. Excavate bottom of trench to uniform grade to achieve stable trench conditions and satisfactory compaction of foundation or bedding materials.

B. When wet soil is encountered on trench bottom and dewatering system is not required, over excavate an additional six (6) inches with approval by the Engineer. Place non-woven geotextile fabric and then compact 12 inches of crushed stone in one (1) lift on top of fabric. Compact crushed stone with four passes of vibratory-type compaction equipment.

C. Perform over excavation, when directed by the Engineer, in accordance with this Section. Removal of unstable or unsuitable material may be required if approved by the Engineer.

1. Even though the Contractor has not determined material to be unsuitable, or

2. If unstable trench bottom is encountered and an adequate ground water control system is installed and operating according to Section 015780 – Control of Ground and Surface Water.

Place trench dams in wet trench foundations in line segments longer than 100 feet between manholes and not less than one in every 500 feet of pipe placed. Install additional dams as needed to achieve workable construction conditions. Do not place trench dams closer than five (5) feet from manholes.

3.08 PIPE EMBEDMENT, PLACEMENT, AND COMPACTION

A. Remove loose, sloughing, caving, or otherwise unsuitable soil from bottoms and sidewalls of trenches immediately prior to placement of embedment materials.

B. Place embedment including bedding, haunching, and initial backfill as shown on the Drawings.

C. For pipe installation, manually spread embedment materials around pipe to provide uniform bearing and side support when compacted. Protect flexible pipe from damage during placing of pipe zone bedding material. Perform placement and compaction directly against undisturbed soils in trench sidewalls, or against sheeting which is to remain in place.

D. Do not place trench shields or shoring within height of embedment zone unless means to maintain density of compacted embedment material are used. If moveable supports are used in embedment zone, lift supports incrementally to allow placement and compaction of material against undisturbed soil.

E. Place geotextile to prevent particle migration from in-situ soil into open-graded (wet trench) embedment materials or drainage layers.

F. Do not damage coatings or wrappings of pipes during backfilling and compacting operations. When embedding coated or wrapped pipes, do not use crushed stone or other sharp, angular aggregates.

G. Place haunching material manually around pipe and compact it to provide uniform bearing and side support. If necessary, hold small-diameter or lightweight pipe in place during compaction of haunch areas and placement beside pipe with sand bags or other suitable means.

H. Shovel in-place and compact embedment material using pneumatic tampers in restricted areas, and vibratory-plate compactors or engine-powered jumping jacks in unrestricted areas. Compact each lift before proceeding with placement of next lift. Water tamping is not allowed.

4 For Sanitary Sewers adhere to subparagraph number 1 and 2.

1. Crushed Concrete (Wet Trench).

a. Maximum of six (6) inches of compacted lift thickness.

b. Systematic compaction by at least two (2) passes of vibrating equipment. Increase compaction effort as necessary to effectively embed pipe to meet deflection test criteria.

c. Moisture content as determined by the Contractor for effective compaction without

softening soil of trench bottom, foundation or trench walls.

2. Cement Stabilized Sand (Dry Trench).

   a. Maximum of six (6) inches of compacted thickness.

   b. Compaction by methods determined by the Contractor to achieve minimum of 95 percent of maximum dry density as determined according to ASTM D 698 for Class II materials and according to ASTM D 558 for cement stabilized materials.

   c. Moisture content should be within 0 and +3 percent of optimum as determined according to ASTM D 698. Moisture content of cement stabilized sands on dry side of optimum as determined according to ASTM D 558 but sufficient for effective hydration.

4.02 TRENCH ZONE BACKFILL PLACEMENT AND COMPACTION

A. Where damage to completed pipe installation work is likely to result from withdrawal of sheeting, leave sheeting in place. Cut off sheeting 1.5 feet or more above crown of pipe. Remove trench supports within five (5) feet from ground surface.

B. Unless otherwise shown on the Drawings, use one of the following trench zone backfills under pavement and to within three (3) feet of edge of pavement. Place trench zone backfill in lifts and compact. Fully compact each lift before placement of next lift.

   1. Cement-Stabilized Sand:

      a. Maximum lift thickness determined by Contractor to achieve uniform placement and required compaction, but do not exceed 12 inches.

      b. Place within twelve (12) inches of the top of the subgrade.

      c. Compact by vibratory equipment to minimum of 95 percent of maximum dry density determined according to ASTM D 558.

      d. Moisture content on dry side of optimum determined according to ASTM D 558 but sufficient for cement hydration.

      e. Clay Soils: Place in maximum 8-inch (8”) thick loose lifts.

      f. Compaction by vibratory Sheep foot roller to minimum of 95 percent of maximum dry density determined according to ASTM D 698.

      g. Moisture content within zero (0) percent to two (2) percent above optimum- determined according to ASTM D 698, unless approved by Engineer.

C. Unless otherwise shown on the Drawings, for trench excavations not under pavement, random backfill of suitable material may be used in trench zone. This provision does not apply to HDPE storm sewers.

   1. Maximum eight (8) inches loose measure.

   2. Compact to minimum of 95 percent of the Standard Effort (ASTM D 698) maximum dry density.

   3. Moisture content as necessary to achieve density.

D. For electric conduits, remove form work used for construction of conduits before placing trench zone backfill.

3.10 MANHOLES, JUNCTION BOXES AND OTHER PIPELINE STRUCTURES

A. Meet requirements of adjoining utility installations for backfill of pipeline structures, as shown on the Drawings.

3.11 Below paved areas or where shown on the Drawings, encapsulate manhole with cement stabilized sand; minimum of one (1) foot below base, minimum one (1) foot around walls, up to within 12 inches of pavement subgrade.

A. In unpaved areas, use select fill for backfill. Existing material that qualifies as select material may be used, unless indicated otherwise on the Drawings. Deposit backfill in uniform layers and compact each layer as specified. Maintain backfill material at no less than 0 percent below nor more than two (2) percent above optimum moisture content, unless otherwise approved by the Engineer. Place fill material in uniform 8-inch (8”) maximum loose layers. Compact fill to at least 95 percent of maximum Standard Proctor Density according to ASTMD 698.

3.12 FIELD QUALITY CONTROL

A. Provide excavation and trench safety systems at locations and to depths required for testing and retesting during construction at no additional cost to the Owner.

B. Tests will be performed on minimum of three (3) different samples of each material type for plasticity characteristics, in accordance with ASTM D 4318, and for gradation characteristics, in accordance with Tex-101-E and Tex-110-E. Additional classification tests will be performed whenever there is noticeable change in material gradation or plasticity, or when requested by the Engineer.

C. At least three (3) tests for moisture-density relationships will be performed initially for backfill materials in accordance with ASTM D 698, and for cement- stabilized sand in accordance with ASTM D 558. Perform additional moisture-density relationship tests once a month or whenever there is noticeable change in material gradation or plasticity.

D. In-place density tests of compacted pipe foundation, embedment and trench zone backfill soil materials will be performed according to ASTM D 1556, or ASTM D 2922 and ASTM D 3017, and at following frequencies and conditions.

1. For open cut construction projects and auger pits: Unless otherwise approved by the Engineer, successful compaction to be measured by one (1) test per 100 linear feet measured along pipe for compacted embedment and one (1) test per 100 linear feet measured along pipe for compacted trench zone backfill material. Length of auger pits to be measured to arrive at 100 linear feet.

2. A minimum of three (3) density tests for each full shift of Work.

3. Density tests will be distributed among placement areas. Placement areas are: foundation, bedding, haunching, initial backfill and trench zone.

4. The number of tests will be increased if inspection determines that soil type or moisture content are not uniform or if compacting effort is variable and not considered sufficient to attain uniform density, as specified.

5. Density tests may be performed at various depths below fill surface by pit excavation. Material in previously placed lifts may therefore be subject to acceptance/rejection.

6. Two (2) verification tests will be performed adjacent to in-place tests showing density less than acceptance criteria. Placement will be rejected unless both verification tests show acceptable results.

7. Recompacted placement will be retested at same frequency as first test series, including verification tests.

8. Identify elevation of test with respect to natural ground or pavement.

E. Recondition, re-compact, and retest at Contractor's expense if tests indicate the Work does not meet specified compaction requirements. For hardened soil cement with nonconforming density, core and test for compressive strength at Contractor's expense.

F. Acceptability of crushed rock compaction will be determined by inspection.

END OF SECTION

PART 1 GENERAL

1.01 SECTION INCLUDES

A. Material Classifications.

B. Utility Backfill Materials:

1. Concrete sand
2. Gem sand
3. Pea gravel
4. Crushed stone
5. Crushed concrete
6. Bank run sand
7. Select backfill
8. Random backfill
9. Cement stabilized sand

C. Material Handling and Quality Control Requirements.

1.02 MEASUREMENT AND PAYMENT

A. Unit Prices.

1. No payment will be made for backfill material. Include payment in unit price for applicable utility installation.
2. Payment for backfill material, when included as separate pay item or when directed by the Engineer, is on cubic yard basis for material placed and compacted within theoretical trench width limits and thickness of material according to the Drawings, or as directed by the Engineer.
3. Refer to Section 012700 – Measurement and Payment for unit price procedures.

B. Stipulated Price (Lump Sum). If Contract is Stipulated Price Contract, payment for work in this Section is included in total Stipulated Price.

1.03 DEFINITIONS

A. Unsuitable Material:

1. Materials classified as ML, CL-ML, MH, PT, OH, and OL according to ASTM D 2487.

2. Materials that cannot be compacted to required density due to gradation, plasticity, or moisture content.

3. Materials containing large clods, aggregates, or stones greater than four (4) inches in any dimension; debris, vegetation, or waste; or any other deleterious materials.

4. Materials contaminated with hydrocarbons or other chemical contaminants.

B. Suitable Material:

1. Materials meeting specification requirements.

2. Unsuitable materials meeting specification requirements for suitable soils after treatment with lime or cement.

C. Foundation Backfill Materials: Natural soil or manufactured aggregate meeting Class I requirements and geotextile filter fabrics as required, to control drainage and material separation. Foundation backfill material is placed and compacted as backfill where needed to provide stable support for structure foundation base. Foundation backfill materials may include concrete fill and seal slabs.

D. Foundation Base: Crushed stone aggregate with filter fabric as required, cement stabilized sand, or concrete seal slab. Foundation base provides smooth, level working surface for construction of concrete foundation.

E. Backfill Material: Classified soil material meeting specified quality requirements for designated application as embedment or trench zone backfill.

F. Embedment Material: Soil material placed under controlled conditions within embedment zone extending vertically upward from top of foundation to an elevation 12 inches above top of pipe, and including pipe bedding, haunching and initial backfill.

G. Trench Zone Backfill: Classified soil material meeting specified quality requirements and placed under controlled conditions in trench zone from top of embedment zone to base course in paved areas or to surface grading material in unpaved areas.

H. Foundation: Either suitable soil of trench bottom or material placed as backfill of over-excavation for removal and replacement of unsuitable or otherwise unstable soils.

I. Source: Source selected by the Contractor for supply of embedment or trench zone backfill material. Selected source may be project excavation, off-site borrow pits, commercial borrow pits, or sand and aggregate production or manufacturing plants.

J. Refer to Section 023170 – Excavation and Backfill for Utilities for other definitions regarding utility installation by trench construction.

1.04 REFERENCES

A. ASTM C 33 – Standard Specification for Concrete Aggregate

B. ASTM C 40 – Standard Test Method for Organic Impurities in Fine Aggregates for Concrete

C. ASTM C 123 – Standard Test Method for Lightweight Particles in Aggregate

D. ASTM C 131 – Standard Test Method for Resistance to Degradation of Small-Size Coarse Aggregate by Abrasion and Impact in Los Angeles Machine

E. ASTM C 136 – Standard Test Method for Sieve Analysis of Fine and Coarse Aggregates

F. ASTM C 142 – Standard Test Method for Clay Lumps and Friable Particles in Aggregates

G. ASTM D 1140 – Standard Test Method for Amount of Material in Soils Finer Than No. 200 Sieve

H. ASTM D 2487 – Standard Classification of Soils for Engineering Purposes (Unified Soil Classification System)

I. ASTM D 4318 – Standard Test Method for Liquid Limit, Plastic Limit, and Plasticity Index of Soils

J. ASTM D 4643 – Standard Test Method for Determination of Water (Moisture) Content of Soil by Microwave Oven Method

K. TxDOT Tex-110-E – Determining Particle Size Analysis of Soils

L. TxDOT Tex-460-A – Material Finer Than 75 (Dm (No.200) Sieve In Mineral Aggregates (Decantation Test for Concrete Aggregates)

1.05 SUBMITTALS

A. Conform to requirements of Section 013300 – Submittal Procedures.

B. Submit description of source, material classification and product description, production method, and application of backfill materials.

C. Submit test results for samples of off-site backfill materials. Comply with Paragraph 2.03, Material Testing.

D. Before stockpiling materials, submit copy of approval from landowner for stockpiling backfill material on private property.

E. Provide delivery ticket which includes source location for each delivery of material that is obtained from off-site sources or is being paid as specific bid item.

1.06 TESTS

A. Perform tests of sources for backfill material in accordance with Paragraph 2.03.

B. Verification tests of backfill materials may be performed by Owner in accordance with Section 014534 – Testing Laboratory Services and in accordance with Paragraph 3.03.

PART 2 PRODUCTS

2.01 MATERIAL CLASSIFICATIONS

A. Classify materials for backfill for purpose of quality control in accordance with Unified Soil Classification Symbols as defined in ASTM D 2487. Material use and application is defined in utility installation specifications and Drawings either by class, as described in Paragraph 2.01B, or by product descriptions, as given in Paragraph 2.02.

B. Class Designations Based on Laboratory Testing:

1. Class 1: Well-graded gravels and sands, gravel-sand mixtures, crushed well-graded rock, little or no fines (GW, SW):

    a. Plasticity index: non-plastic.

    b. Gradation: D60/D10 - greater than four (4) percent; amount passing No. 200 sieve – less than or equal to five (5) percent.

2. Class II: Poorly graded gravels and sands, silty gravels and sands, little to moderate fines(GM, GP, SP, SM):

    a. Plasticity index: 0 to 4.

    b. Gradations:

        i. Gradation (GP, SP): amount passing No. 200 sieve - less than five (5) percent.

        ii. Gradation (GM, SM): amount passing No. 200 sieve - between 12 percent and 50percent.

        iii. Borderline gradations with dual classifications (e.g., SP-SM): amount passing No. 200 sieve - between five (5) percent and 12 percent.

3. Class III: Clayey gravels and sands, poorly graded mixtures of gravel, sand, silt, and clay (GC, SC, and dual classifications, e.g., SP-SC):

    a. Plasticity index: greater than seven (7).

    b. Gradation: amount passing No. 200 sieve - between 12 percent and 50 percent.

4. Class IVA: Lean clays (CL).

    a. Plasticity Indexes:

        i. Plasticity index: greater than seven (7), and above A line.

        ii. Borderline plasticity with dual classifications (CL-ML): PI between four (4) and seven (7).

    b. Liquid limit: less than 50.

    c. Gradation: amount passing No. 200 sieve - greater than 50 percent.

    d. Inorganic.

5. Class IVB: Fat clays (CH)

    a. Plasticity index: above A line.

    b. Liquid limit: 50 or greater.

    c. Gradation: amount passing No. 200 sieve - greater than 50 percent.

    d. Inorganic.

6. Use soils with dual class designation according to ASTM D 2487, and which are not defined above, according to more restrictive class.

2.02 PRODUCT DESCRIPTIONS

A. Soils classified as silt (ML) silty clay (CL-ML with PI of 4 to 7), elastic silt (MH), organic clay and organic silt (OL, OH), and organic matter (PT) are not acceptable as backfill materials. These soils may be used for site grading and restoration in unimproved areas as approved by the Engineer. Soils in Class IVB, fat clay (CH) may be used as backfill materials where allowed by applicable backfill installation specification. Refer to Section 023160 – Excavation and Backfill for Structures and Section 023170 – Excavation and Backfill for Utilities.

B. Provide backfill material that is free of stones greater than six (6) inches, free of roots, waste, debris, trash, organic material, unstable material, non-soil matter, hydrocarbon or other contamination, conforming to following limits for deleterious materials:

1. Clay lumps: Less than 0.5 percent for Class I, and less than 2.0 percent for Class II, when tested in accordance with ASTM C 142.

2. Lightweight pieces: Less than five (5) percent when tested in accordance with ASTM C 123.

3. Organic impurities: No color darker than standard color when tested in accordance with ASTM C 40.

C. Manufactured materials, such as crushed concrete, may be substituted for natural soil or rock products where indicated in product specification, and approved by the Engineer, provided that physical property criteria are determined to be satisfactory by testing.

D. Bank Run Sand: Durable bank run sand classified as SP, SW, or SM by Unified Soil Classification System (ASTM D 2487) meeting following requirements:

1. Less than 15 percent passing number 200 sieve when tested in accordance with ASTM D1140. Amount of clay lumps or balls may not exceed two (2) percent.

2. Material passing number 40 sieve shall meet the following requirements when tested in accordance with ASTM D 4318: Plasticity index: not exceeding seven (7).

E. Concrete Sand: Natural sand, manufactured sand, or combination of natural and manufactured sand conforming to requirements of ASTM C 33 and graded within following limits when tested in accordance with ASTM C 136:

Sieve	Percent Passing
3/8"	100
No. 4	95 to100
No. 8	80 to100
No. 16	50 to 85
No. 30	25 to 60
No. 50	10 to30
No. 100	2 to10

F. Gem Sand: Sand conforming to requirements of ASTM C 33 for course aggregates specified for number eight (8) size and graded within the following limits when tested in accordance with ASTM C 136:

Sieve	Percent Passing
3/8"	95 to 100
No. 4	60 to 80
No. 8	15 to 40

G. Pea Gravel: Durable particles composed of small, smooth, rounded stones or pebbles and graded within the following limits when tested in accordance with ASTM C 136:

Sieve	Percent Passing
1/2"	100
3/8"	85 to 100
No. 4	10 to 30
No. 8	0 to 10
No. 16	0 to 5

H. Crushed Aggregates: Crushed aggregates consist of durable particles obtained from an approved source and meeting the following requirements:

1. Materials of one product delivered for same construction activity from single source, unless otherwise approved by the Engineer.

2. Non-plastic fines.

3. Los Angeles abrasion test wear not exceeding 45 percent when tested in accordance with ASTM C 131.

4. Crushed aggregate shall have minimum of 90 percent of particles retained on No. 4 sieve with two (2) or more crushed faces as determined by Tex-460-A, Part 1.

5. Crushed stone: Produced from oversize plant processed stone or gravel, sized by crushing to predominantly angular particles from naturally occurring single source. Uncrushed gravel is not acceptable materials for embedment where crushed stone is shown on applicable utility embedment details.

6. Crushed Concrete: Crushed concrete is an acceptable substitute for crushed stone as utility backfill. Gradation and quality control test requirements are same as crushed stone. Provide crushed concrete produced from normal weight concrete of uniform quality; containing particles of aggregate and cement material, free from other substances such as asphalt, reinforcing steel fragments, soil, waste gypsum (calcium sulfate), or debris.

7. Gradations, as determined in accordance with Tex-110-E.

Sieve	Percent Passing by Weight for Pipe Embedment by Ranges of Nominal Pipes Sizes		
	>15”	15” – 8”	<8”
1"	95 - 100	100	---
3/4"	60 - 90	90 - 100	100
1/2"	25 - 60	---	90 – 100
3/8"	---	20 - 55	40 – 70
No. 4	0 - 5	0 - 10	0 – 15
No. 8	---	0 - 5	0 - 5

I. Select Backfill: Class III clayey gravel or sand or Class IV lean clay with plasticity index between seven (7) and 20 or clayey soils treated with lime to meet plasticity criteria.

J. Random Backfill: Any suitable soil or mixture of soils within Classes 1, 11, III and IV; or fat clay (CH) where allowed by applicable backfill installation specification. Refer to Section 023160 – Excavation and Backfill for Structures and Section 023170 – Excavation and Backfill for Utilities.

K. Cement Stabilized Sand: Conform to requirements of Section 023210 – Cement Stabilized Sand.

L. Concrete Backfill: Conform to Class B concrete as specified in Section 033150 – Concrete for Utility Construction.

M. Flexible Base Course Material: Conform to requirements of applicable portions of Section 02712 – Cement Stabilized Base Course and Section 02713 – Recycled Crushed Concrete Base Course.

2.03 MATERIAL TESTING

A. Source Qualification: Perform testing to obtain tests by suppliers for selection of material sources and products not from the Site. Test samples of processed materials from current production representing material to be delivered. Use tests to verify that materials meet specification requirements. Repeat qualification test procedures each time source characteristics change or there is planned change in source location or supplier. Include the following qualification tests, as applicable:

1. Gradation: Report complete sieve analyses regardless of specified control sieves from largest particle through No. 200 sieve.

2. Plasticity of material passing No. 40 sieve

3. Los Angeles abrasion wear of material retained on No. 4 sieve

4. Clay lumps

5. Lightweight pieces

6. Organic impurities

B. Production Testing: Provide reports to the Engineer from an independent testing laboratory that backfill materials to be placed in Work meet applicable specification requirements.

C. Assist the Engineer in obtaining material samples for verification testing at source or at production plant.

PART 3 EXECUTION

3.01 SOURCES

A. Use of existing material in trench excavations is acceptable, provided applicable specification requirements are satisfied.

B. Identify off-site sources for backfill materials at least 14 days ahead of intended use so that the Engineer may obtain samples for verification testing.

C. Materials may be subjected to inspection or additional verification testing after delivery. Materials which do not meet requirements of specifications will be rejected. Do not use material which, after approval, has become unsuitable for use due to segregation, mixing with other materials, or by contamination. Once material is approved by the Engineer, expense for sampling and testing required to change to different material will be credited to the Owner through change order.

D. Bank run sand, select backfill, and random backfill, if available in project excavation, may be obtained by selective excavation and acceptance testing. Obtain additional quantities of these materials and other materials required to complete work from off-site sources.

E. Owner does not represent or guarantee that any soil found in excavation work will be suitable and acceptable as backfill material.

3.02 MATERIAL HANDLING

A. When backfill material is obtained from either commercial or non-commercial borrow pit, open pit to expose vertical faces of various strata for identification and selection of approved material to be used. Excavate selected material by vertical cuts extending through exposed strata to achieve uniformity in product.

B. Establish temporary stockpile locations for practical material handling, control, and verification testing by the Engineer in advance of final placement. Obtain approval from landowner for storage of backfill material on adjacent private property.

C. When stockpiling backfill material near the Site, use appropriate covers to eliminate blowing of materials into adjacent areas and prevent runoff containing sediments from entering drainage system.

D. Place stockpiles in layers to avoid segregation of processed materials. Load material by making successive vertical cuts through entire depth of stockpile.

3.03 FIELD QUALITY CONTROL

A. Quality Control

1. Engineer may sample and test backfill at:

    a. Sources including borrow pits, production plants and Contractor's designated off-site stockpiles.

    b. On-site stockpiles.

    c. Materials placed in Work.

2. Engineer may re-sample material at any stage of work or location if changes in characteristics are apparent.

B. Production Verification Testing: Owner's testing laboratory will provide verification testing on backfill materials, as directed by the Engineer. Samples may be taken at source or at production plant, as applicable.

END OF SECTION

PART 1 GENERAL

1.01 SECTION INCLUDES

A. Section includes requirements for construction, maintenance and removal of concrete washout structures.

1.02 MEASUREMENT AND PAYMENT

A. Measurement and payment are as noted on the Unit Price Schedule.

B. Refer to Section 012700 – Measurement and Payment for unit price procedures.

C. No separate measurement and payment will be made for maintenance or removal of accumulated washout structure wastes. Removal of the concrete washout structure and site restoration is incidental to the cost of the concrete washout structure. For the Below Grade Concrete Washout Structure shown on details, the sandbags and geotextile are incidental to the cost of the concrete truck washout structure.

1.03 SUBMITTALS

A. Refer to Section 013300 – Submittal Procedures.

B. Designate concrete washout structure to be used: a), concrete washout structure constructed below grade as shown on details or b). prefabricated concrete washout container as shown on details. Submit site plan showing location(s) of concrete washout structure(s) for approval.

C. Refer to Section 017419 – Waste Material Disposal.

D. Submit plan for disposal of both concrete washout water and solid concrete wastes for approval.

PART 2 PRODUCTS

2.01 CONCRETE TRUCK WASHOUT STRUCTURE

A. Refer to details: Below Grade Concrete Washout Structure with Sandbags or details: Portable Concrete Washout Container with Ramps, such as provided by American Concrete Washout, Inc. or approved equal.

PART 3 EXECUTION

3.01 PLACEMENT

A. Do not locate concrete washout structures within 50 feet of storm drain inlets, open drainage facilities or watercourses.

B. Locate away from construction traffic or access areas to prevent disturbance or tracking.

3.02 CONSTRUCTION

A. Install a sign adjacent to each temporary concrete washout structure to inform concrete equipment operators to utilize the proper facilities. See detail sheets for sign dimensions.

B. Below Grade Concrete Truck Washout Structure with Sandbags

1. Construct temporary concrete washout structures below grade with a minimum length and width of 10 feet. Construct and maintain concrete truck washout structures in sufficient quantity and size to contain all liquid and concrete waste generated by washout operations.

2. Remove rocks and other debris in soil base of structure that might tear or puncture the plastic lining.

3. Provide plastic lining material which is a minimum of 10-mil thick polyethylene sheeting. Sheeting shall be free of holes, tears or other defects that compromise the impermeability of the lining. Install lining seams in accordance with manufacturers 'recommendations.

4. Install 15 feet by 35 feet by eight (8) inches thick granular fill truck parking pad underlain with geotextile per Section 015750 – Stabilized Construction Exit.

5. Install orange safety fence around three sides of the structure as shown on detail.

C. Place Portable Concrete Washout Container(s) as shown on the approved submittal.

3.03 MAINTENANCE

A. Once concrete wastes are washed into the designated structure and allowed to harden, break up the concrete remove and dispose in accordance with approved submittal.

B. Inspect lining integrity and level in concrete washout structure before each rainfall to prevent overtopping due to rainfall and daily during periods of daily rainfall and, at a minimum, once every week.

C. Repair or replace damaged lining or other damage or missing parts of the washout structure immediately.

D. Maintain level in washout structure(s) to provide adequate holding capacity with a minimum freeboard of 12 inches.

E. Existing structure(s) must be cleaned, or new structure(s) constructed and ready for use once the washout structure is 75% full.

3.04 REMOVAL OF CONCRETE WASHOUT STRUCTURES

A. Once concrete washout structures are no longer required, as determined by the Engineer, remove and dispose the hardened concrete and concrete washout water per the approved submittal.

3.05 MATERIAL DISPOSAL

A. Refer to Section 017419 – Waste Material Disposal.

B. Dispose materials used to construct truck washout structure(s) and granular fill parking pad(s) properly.

3.06 SITE RESTORATION

A. Compact clean fill in pit up to surrounding grade.

B. Backfill and repair all holes, depressions or other ground disturbances caused by the construction and removal of the concrete washout structure(s).

C. Restore concrete washout structure area to match surrounding grade and vegetation.

END OF SECTION

PART 1 GENERAL

1.01 SECTION INCLUDES

A. Demolishing and removing existing structures, equipment and materials.

B. Disposing of demolished materials and equipment.

1.02 MEASUREMENT AND PAYMENT

A. Unit Prices

1. Measurement for demolition is on a lump sum basis for each contiguous area, including submittal of proposed demolition and removal schedule.

2. Refer to Section 012700 – Measurement and Payment for unit price procedures.

B. Stipulated Price (Lump Sum). If the Contract is a Stipulated Price Contract, payment for work in this Section is included in the total Stipulated Price.

1.03 OWNERSHIP OF MATERIAL AND EQUIPMENT

A. Materials and equipment designated for reuse or salvage are listed on the Drawings. Protect items designated for reuse or salvage from damage during demolition, handling and storage. Restore damaged items to satisfactory condition.

B. Materials and equipment not designated for reuse or salvage become the property of the Contractor.

1.04 STORAGE AND HANDLING

A. Store and protect materials and equipment designated for reuse until time of installation.

B. Deliver items to be salvaged to areas indicated on the Drawings.

C. Remove equipment and materials not designated for reuse or salvage and all waste and debris resulting from demolition from site. Remove material as work progresses to avoid clutter.

1.05 ENVIRONMENTAL CONTROLS

A. Minimize spread of dust and flying particles. If required by governing regulations, use temporary enclosures and other suitable methods to prevent the spread of dust, dirt and debris.

B. Use appropriate controls to limit noise from demolition to levels designated in applicable ordinances and regulations.

C. Do not use water where it can create dangerous or objectionable conditions, such as localized flooding, erosion, or sedimentation of nearby ditches or streams.

D. Stop demolition and notify the Engineer if underground fuel storage tanks, asbestos, PCB's, contaminated soils, lead, or other hazardous materials are encountered.

E. Dispose of removed equipment, materials, waste and debris in a manner conforming to applicable laws and regulations.

PART 2 PRODUCTS

2.01 EQUIPMENT AND MATERIALS FOR DEMOLITION

A. Use equipment and materials approved by the Engineer.

B. Do not use a drop hammer where the potential exists for damage to underground utilities, structures, or adjacent improvements.

PART 3 EXECUTION

3.01 EXAMINATION

A. Prior to demolition, make an inspection with the Engineer to determine the condition of existing structures and features adjacent to items designated for demolition.

B. The Engineer will mark or list existing equipment to remain the property of the Owner.

C. Do not proceed with demolition or removal operations until after the joint inspection and subsequent authorization by the Engineer.

3.02 PROTECTION OF PERSONS AND PROPERTY

A. Provide safe working conditions for employees throughout demolition and removal operations. Observe safety requirements for work below grade.

B. Maintain safe access to adjacent property and buildings. Do not obstruct roadways, sidewalks or passageways adjacent to the work.

C. Perform demolition in a manner to prevent damage to adjacent property. Repair damage to property or adjacent property and facilities.

D. Contractor shall be responsible for safety and integrity of adjacent structures and shall be liable for any damage due to movement or settlement. Provide proper framing and shoring necessary for support. Cease operations if an adjacent structure appears to be endangered. Resume demolition only after proper protective measures have been taken.

E. Erect and maintain enclosures, barriers, warning lights, and other required protective devices.

3.03 UTILITY SERVICES

A. Follow rules and regulations of authorities or companies having jurisdiction over communications, pipelines, and electrical distribution services.

B. Notify and coordinate with utility company and adjacent building occupants when temporary interruption of utility service is necessary.

3.04 BUILDING DEMOLITION

A. Demolish structure to the lines and grades shown on the Drawings. Where no limits are shown, the limits shall be four (4) inches outside new items to be installed. Removals beyond these limits shall be at Contractor's expense; satisfactorily reconstruct excess removals.

B. Proceed with demolition from the top of the structure to the ground. Complete demolition work above each floor or tier before disturbing supporting members of lower levels.

C. Demolish concrete and masonry in small sections.

D. Carefully remove structural framing members and lower them to the ground by means of hoists, derricks or other suitable devices.

E. Do not overload existing roof or structures.

F. Provide temporary coverings for openings through walls and roof to prevent water damage to buildings and structures which are to remain.

G. Where existing concrete must be removed, but will be replaced subsequently:

1. Make initial cut with a concrete saw; do not cut reinforcement.

2. After removing concrete, cut cross bars at center of breakout and protect for subsequent concrete work.

H. Demolish structures to a minimum of three (3) feet below finished grade, unless otherwise indicated on the Drawings.

3.05 DISPOSAL

A. Remove from the site all items contained in or upon the structure not designated for reuse or salvage. Conform to requirements of Section 017419 – Waste Material Disposal.

B. Follow method of disposal as required by regulatory agencies.

3.06 BACKFILL

A. Backfill holes in accordance with specification sections governing indicated materials shown on the Drawings. Where no material is indicated, backfill with approved borrow and compact to a density of 90 percent standard Proctor.

B. Do not backfill with material from demolition unless approved by the Engineer.

3.07 MECHANICAL WORK ITEMS

A. Mechanical removals consist of dismantling and removing existing piping, pumps, motors, water tanks, equipment and other appurtenances. It includes cutting, capping, and plugging required to restore use of existing utilities.

B. When underground piping is to be altered or removed, cap the remaining piping. Abandoned underground piping may be left in place unless it interferes with new work or is shown or specified to be removed.

C. Conform to applicable codes when making any changes to plumbing and heating systems.

END OF SECTION

PART 1 GENERAL

1.01 SECTION INCLUDES

A. Polyvinyl chloride sewer pipe for gravity sewers in nominal diameters 4 inches through 48 inches.

1.02 MEASUREMENT AND PAYMENT

A. Unit Prices.

1. No separate payment will be made for PVC pipe under this Section. Include cost in unit price for work included as specified in the following sections:

a. Section 025310 - Gravity Sanitary Sewers

2. Refer to Section 012700 - Measurement and Payment for unit price procedures.

B. Stipulated Price (Lump Sum). If Contract is Stipulated Price Contract, payment for work in this Section is included in total Stipulated Price.

1.03 REFERENCES

A. ASTM D 1248 - Standard Specification for Polyethylene Plastics Molding and Extrusion Materials.

B. ASTM D 1784 - Standard Specification for Rigid Poly (Vinyl Chloride) (PVC) Compounds and Chlorinated Poly (Vinyl Chloride) (CPVC) Compounds.

C. ASTM D 2444 - Standard Test Method for Determination of the Impact Resistance of Thermoplastic Pipe and Fittings by Means of a Tup (Falling Weight).

D. ASTM D 2680 - Specification for Acrylonitrile-Butadiene-Styrene (ABS) and Poly (Vinyl Chloride) (PVC) Composite Sewer Piping.

E. ASTM D 3034 - Specification for Type PSM Poly (Vinyl Chloride) (PVC) Sewer Pipe and Fittings.

F. ASTM D 3212 - Standard Specification for Joints for Drain and Sewer Plastic Pipes Using Flexible Elastomeric Seals.

G. ASTM F 477 - Standard Specification for Elastomeric Seals (Gaskets) for Joining Plastic Pipe.

H. ASTM F 679 - Standard Specification for Poly (Vinyl Chloride) (PVC) Large-Diameter Plastic Gravity Sewer Pipe and Fittings.

I. ASTM F 794 - Standard Specification for Poly (Vinyl Chloride) (PVC) Profile Gravity Sewer Pipe and Fittings Based on Controlled Inside Diameter.

J. AWWA C 111 - American National Standard for Rubber-Gasket Joints for Ductile-Iron Pressure Pipe and Fittings.

K. AWWA C 900 - Standard for Polyvinyl Chloride (PVC) Pressure Pipe and Fabricated Fittings, 4 Inches Through 60 Inches for Water Distribution.

L. PPI TR3 - Policies and Procedures for Developing Recommended Hydrostatic Design Stresses for Thermoplastic Pipe Materials.

M. UNI-B-13 - Recommended Standard Performance Specification for Joint Restraint Devices for Use with Polyvinyl Chloride Pipe.

1.04 SUBMITTALS

A. Conform to requirements of Section 013300 - Submittal Procedures.

B. Submit shop drawings showing design of new pipe and fittings indicating alignment and grade, laying dimensions, fabrication, fittings, flanges, and special details.

1.05 QUALITY CONTROL

A. When foreign manufactured material is proposed for use, have material tested for conformance to applicable ASTM requirements by certified independent testing laboratory located in United States. Certification from other source is not acceptable. Furnish copies of test reports to Engineer for review. Cost of testing paid by Contractor.

PART 2 PRODUCTS

2.01 MATERIAL

A. Use PVC compounds in manufacture of pipe that contain no ingredient in amount that has been demonstrated to migrate into water in quantities considered to be toxic.

B. Gaskets:

1. Flat Face Mating Flange: Full faces 1/8-inch-thick ethylene propylene (EPR) rubber.

2. Raised Face Mating Flange: Flat ring 1/8-inch ethylene propylene (EDR) rubber, with filler gasket between OD of raised face and flange OD to protect flange from bolting moment.

C. Lubricant for rubber-gasketed joints: Water soluble, non-toxic, non-objectionable in taste and odor imparted to fluid, non-supporting of bacteria growth, having no deteriorating effect on PVC or rubber gaskets.

D. Do not use PVC in potentially or known contaminated areas.

E. Do not use PVC in areas exposed to direct sunlight.

2.02 GRAVITY SEWER PIPE

A. Fittings: Provide PVC gravity sewer sanitary bends, tee, or Wye fittings for new sanitary sewer construction. PVC pipe fittings shall be full-bodied, either injection molded or factory fabricated.

B. Conditioning. Conditioning of samples prior to and during tests is subject to approval by Engineer. When referee tests are required, condition specimens in accordance with Procedure A in ASTM D 618 at 73.4 degrees F plus or minus 3.6 degrees F and 50 percent relative humidity plus or minus 5 percent relative humidity for not less than 40 hours prior to test. Conduct tests under same conditions of temperature and humidity unless otherwise specified.

C. Pipe Stiffness. Determine pipe stiffness at 5 percent deflection in accordance with Test Method D 2412. Minimum pipe stiffness shall be 46 psi. For diameters 4 inches through 18 inches, test three specimens, each a minimum of 6 inches (152 mm) in length. For diameters 21 inch through 36 inch, test three specimens, each a minimum of 12 inch (305 mm) in length.

D. Flattening. Flatten three specimens of pipe, prepared in accordance with Paragraph 2.04F, in suitable press until internal diameter has been reduced to 60 percent of original inside diameter of pipe. Rate of loading shall be uniform. Test specimens, when examined under normal light and with unaided eye, shall show no evidence of splitting, cracking, breaking, or separation of pipe walls or bracing profiles. Perform the flattening test in conjunction with pipe stiffness test.

E. Joint Tightness. Test for joint tightness in accordance with ASTM D 3212, except that joint shall remain watertight at minimum deflection of 5 percent. Manufacturer will be required to provide independent third party certification for joint testing each diameter of storm sewer pipe.

F. Purpose of Tests. Flattening and pipe stiffness tests are intended to be routine quality control tests. Joint tightness test is intended to qualify pipe to specified level of performance.

PART 3 EXECUTION

3.01 PROTECTION

A. Store pipe under cover out of direct sunlight and protect from excessive heat or harmful chemicals in accordance with manufacturer's recommendations.

3.02 INSTALLATION

A. Conform to requirements of, Section 025310 - Gravity Sanitary Sewers, as applicable.

B. Install PVC pipe in accordance with Section 023170 - Excavation and Backfill for Utilities, ASTM D 2321 for Sewer Pipe, and manufacturer's recommendations.

C. Avoid imposing strains that will overstress or buckle pipe when lowering pipe into trench.

D. Hand shovel pipe bedding under pipe haunches and along sides of pipe barrel and compact to eliminate voids and ensure side support.

E. Store PVC pipe under cover out of direct sunlight. Protect pipe from excessive heat or harmful chemicals. Prevent damage by crushing or piercing.

F. Allow PVC pipe to cool to ground temperature before backfilling when assembled out of trench to prevent pullout due to thermal contraction.

END OF SECTION

PART 1 GENERAL

1.01 SECTION INCLUDES

A. Gravity sanitary sewers and appurtenances, including stacks and service connections.

1.02 MEASUREMENT AND PAYMENT

A. Unit Prices:

1. Payment for gravity sanitary sewers by open-cut is on linear foot basis, complete in place, including sewer pipe, connections to existing manholes, post installation television inspection and testing. Measurement will be taken along centerline of pipe from centerline to centerline of manholes.

2. Refer to Section 012700 – Measurement and Payment for unit price procedures.

B. Stipulated Price (Lump Sum). If Contract is Stipulated Price Contract, payment for work in this Section is included in total Stipulated Price.

1.03 SUBMITTALS

A. Conform to requirements of Section 013300 – Submittal Procedures.

B. Submit proposed methods, equipment, materials and sequence of operations for sewer construction. Plan operations so as to minimize disruption of utilities to occupied facilities or adjacent property.

C. Test Reports: Submit test reports and inspection videos as specified in Part 3: Execution of this Section. Video tapes become property of the Owner.

1.04 QUALITY ASSURANCE

A. Qualifications: Install sanitary sewer that is watertight both in pipe-to-pipe joints and in pipe- to-manhole connections. Perform testing in accordance with Section 025330 – Acceptance Testing for Sanitary Sewers.

B. Regulatory Requirements:

1. Install sewer lines to meet minimum separation distance from potable water line, as scheduled below. Separation distance is defined as distance between outside of water pipe and outside of sewer pipe. When possible, install new sanitary sewers no closer to water lines than nine (9) feet in all directions. Where this separation distance cannot be achieved, new sanitary sewers shall be installed as specified in this section.

2. Make notification to the Engineer when water lines are uncovered during sanitary sewer installation where minimum separation distance cannot be maintained.

3. Lay gravity sewer lines in straight alignment and grade.

1.05 PRODUCT DELIVERY, STORAGE, AND HANDLING

A. Inspect pipe and fittings upon arrival of materials at Site.

B. Handle and store pipe materials and fittings to protect them from damage due to impact, shock, shear or free fall. Do not drag pipe and fittings along ground. Do not roll pipe unrestrained from delivery trucks.

C. Use mechanical means to move or handle pipe. Employ acceptable clamps, rope or slings around outside barrel of pipe and fittings. Do not use hooks, bars, or other devices in contact with interior surface of pipe to lift or move lined pipe.

PART 2 PRODUCTS

2.01 PIPE

A. Provide piping materials for gravity sanitary sewers of sizes and types indicated on the Drawings or as specified.

B. Unlined reinforced concrete pipe is not acceptable.

2.02 PIPE MATERIAL SCHEDULE

A. Unless otherwise shown on the Drawings, use pipe materials that conform to requirements specified in one (1) or more of following Sections:

1. Section WW2 - Polyvinyl Chloride (PVC) Pipe and Wastewater Fittings
2. Section 025060 – Polyvinyl Chloride Pipe

B. Where shown on the Drawings, provide pipe meeting minimum class, dimension ratio, or other criteria indicated.

C. Pipe materials other than those listed above shall not be used for gravity sanitary sewers.

2.03 APPURTENANCES

A. Roof, street or other type of surface water drains shall not be connected or reconnected into sanitary sewer lines.

PART 3 EXECUTION

3.01 PREPARATION

A. Perform work in accordance with OSHA standards.

B. Immediately notify agency or company owning utility line which is damaged, broken or disturbed. Obtain approval from the Engineer and agency or utility company for repairs or relocations, either temporary or permanent.

C. Remove old pavements and structures including sidewalks and driveways in accordance with requirements of Section 022210 – Removing Existing Pavements and Structures.

D. Install and operate dewatering and surface water control measures in accordance with Section 015780 – Control of Ground and Surface Water.

E. Do not allow sand, debris or runoff to enter sewer system.

3.02 DIVERSION PUMPING

A. Install and operate required bulkheads, plugs, piping, and diversion pumping equipment to maintain sewage flow and to prevent backup or overflow. Obtain approval for diversion pumping equipment and procedures from the Engineer.

B. Design piping, joints and accessories to withstand twice maximum system pressure or 50 psi, whichever is greater.

C. No sewage shall be diverted into area outside of sanitary sewer.

D. In event of accidental spill or overflow, immediately stop overflow and take action to cleanup and disinfect spillage. Promptly notify the Engineer so that required reporting can be made to applicable agencies.

3.03 EXCAVATION

A. Earthwork: Conform to requirements of Section 023170 – Excavation and Backfill for Utilities. Use bedding as indicated on the Drawings.

B. Line and Grade: Establish required uniform line and grade in trench from benchmarks identified by the Engineer. Maintain this control for minimum of 100 feet behind and ahead of pipe- laying operation. Use laser beam equipment to establish and maintain proper line and grade of work. Use of appropriately sized grade boards which are substantially supported is also acceptable. Protect boards and location stakes from damage or dislocation.

C. Trench Excavation: Excavate pipe trenches to depths shown on the Drawings and as specified in Section 023170 – Excavation and Backfill for Utilities.

3.04 PIPE INSTALLATION BY OPEN CUT

A. Install pipe in accordance with pipe manufacturer's recommendations and as specified in following paragraphs.

B. Install pipe only after excavation is completed, bottom of trench fine graded, bedding material is installed, and trench has been approved by the Engineer.

C. Install pipe to line and grade indicated. Place pipe so that it has continuous bearing of barrel on bedding material and is laid in trench so interior surfaces of pipe follow grades and alignment indicated. Provide bell holes where necessary.

D. Install pipe with spigot ends toward downstream end of flow such that water flows into bell and out the spigot.

E. Form concentric joint with each section of adjoining pipe so as to prevent offsets.

F. Keep interior of pipe clean as installation progresses. Remove foreign material and debris from pipe.

G. Provide lubricant, place and drive home newly laid sections with come-a-long winches so as to eliminate damage to sections. Install pipe to "home" mark where provided. Use of back hoes or similar powered equipment will not be allowed unless protective measures are provided and approved in advance by the Engineer.

H. Keep excavations free of water during construction and until final inspection.

I. When work is not in progress, cover exposed ends of pipes with approved plug to prevent foreign material from entering pipe.

J. Where gravity sanitary sewer is to be installed under existing water line with separation distance of at least two (2) feet and less than nine (9) feet, install new sewer pipe so that one full 18 foot long pipe is centered on water line crossing. Embed sewer pipe in cement stabilized sand for minimum distance of nine (9) feet on each side of crossing.

K. Where gravity sanitary sewer is to be installed under existing water line with separation distance of less than two (2) feet, install new sewer using pressure-rated pipe as shown on the Drawings. Maintain minimum one (1) foot separation distance.

L. Where the length of the stub is not indicated, install the stub to the right-of-way line and seal the free end with an approved plug.

3.05 PIPE INSTALLATION OTHER THAN OPEN CUT

A. For installation of pipe by augering, jacking, or tunneling, conform to requirements of specification sections on tunneling, augering, jacking and microtunneling work as appropriate.

3.06 INSPECTION AND TESTING

A. Visual Inspection: Check pipe alignment in accordance with Section 025330 – Acceptance Testing for Sanitary Sewers.

B. Mandrel Testing: Use Mandrel Test to test flexible pipe for deflection. Refer to Section 025330 – Acceptance Testing for Sanitary Sewers.

C. Pipe Leakage Test: After backfilling line segment and prior to tie-in of service connections, visually inspect gravity sanitary sewers where feasible, and test for leakage in accordance with Section 025330 – Acceptance Testing for Sanitary Sewers. Maintain piezometer installed to conform with Section 015780 – Control of Ground and Surface Water, until acceptance testing is completed.

3.07 BACKFILL AND SITE CLEANUP

A. Backfill and compact soil in accordance with Section 023170 – Excavation and Backfill for Utilities.

B. Backfill trench in specified lifts only after pipe installation is approved by the Engineer.

C. Provide hydro mulch seeding in areas of commercial, industrial or undeveloped land use over surface of ground disturbed during construction and not paved or not designated to be paved. Grade surface at uniform slope to natural grade as indicated on the Drawings. Provide minimum of four (4) inches of topsoil as specified in Section 02911 – Topsoil and apply hydro mulch according to requirements of Section 029210 – Hydro Mulch Seeding.

D. Provide sodding in areas of residential land use over surface of ground disturbed during construction and not paved or not designated to be paved. Grade surface at uniform slope to natural grade as indicated on the Drawings. Provide minimum of four (4) inches of topsoil per Section 02911 – Topsoil. Sod disturbed areas in accordance with Section 02922 –Sodding.

END OF SECTION

PART 1 GENERAL

1.01 SECTION INCLUDES

A. Acceptance testing of sanitary sewers including:

1. Visual inspection of sewer pipes.
2. Mandrel testing for flexible sewer pipes.
3. Leakage testing of sewer pipes.
4. Leakage testing of manholes.
5. Smoke testing of point repairs.
6. Television and Video Inspection.

B. All tests listed in this Section are not necessarily required on this Project. Required tests are named in other Sections which refer to this Section for testing criteria and procedures.

C. Unless otherwise stated, where applicable, all process pipes will require testing performed by the Contractor to verify installation and performance. Process piping shall be considered any piping necessary for functionality of the facility.

1.02 MEASUREMENT AND PAYMENT

A. Unit Prices:

1. No payment will be made for acceptance testing under this Section. Include payment in unit price for work requiring acceptance testing.
2. Refer to Section 012700 – Measurement and Payment for unit price procedures.

B. Stipulated Price (Lump Sum). If Contract is Stipulated Price Contract, payment for work in this Section is included in total Stipulated Price.

1.03 REFERENCES

A. ASTM C 828 – Standard Test Method for Low Pressure Air Test of Vitrified Clay Pipe Lines

B. ASTM C 924 – Standard Practice for Testing Concrete Pipe Sewer Lines by Low-Pressure Air Test Method

C. ASTM D 3034 – Standard Specification for Type PSM Polyethylene (Vinyl Chloride) (PVC) Sewer Pipe and Fittings

D. ASTM F 794 – Specification for Poly (Vinyl Chloride) (PVC) Profile Gravity Sewer Pipe and Fittings Based on Controlled Inside Diameter

E. ASTM F 1417 – Standard Test Method for Installation Acceptance of Plastic Gravity Sewer Lines Using Low Pressure Air

F. ASTM C 1244 – Standard Test Method for Concrete Sewer Manholes by the Negative Air Pressure (Vacuum) Test Prior to Backfill

1.04 PERFORMANCE REQUIREMENTS

A. Gravity flow sanitary sewers are required to have straight alignment and uniform grade between manholes.

B. Flexible pipe, including "semi-rigid" pipe, is required to show no more than five percent (5%) deflection. Test pipe no sooner than 30 days after backfilling of line segment but prior to final acceptance using standard mandrel to verify that installed pipe is within specified deflection tolerances.

C. Must meet Texas Commission on Environmental Quality (TCEQ) Testing Requirements Chapter-217-57.

1.05 SUBMITTALS

A. Conform to requirements of Section 013300 – Submittal Procedures.

B. Test Plan: Before testing begins and in adequate time to obtain approval through submittal process, prepare and submit test plan for approval by the Engineer. Include testing procedures, methods, equipment, and tentative schedule. Obtain advance written approval for deviations from the Drawings and Specifications.

C. Test Reports: Submit test reports for each test on each segment of sanitary sewer.

1.06 GRAVITY SANITARY SEWER QUALITY ASSURANCE

A. Repair, correct, and retest manholes or sections of pipe which fail to meet specified requirements when tested.

B. Provide testing reports and video tape of television inspection as directed by the Engineer.

C. Upon completion of tape reviews by the Engineer, Contractor will be notified regarding final acceptance of sewer segment.

1.07 SEQUENCING AND SCHEDULING

A. Perform testing as work progresses. Schedule testing so that no more than 1000 linear feet of installed sewer remains untested at one time.

B. Coordinate testing schedules with the Engineer. Perform testing under observation of the Engineer.

PART 2 PRODUCTS

2.01 DEFLECTION MANDREL

A. Mandrel Sizing: Rigid mandrel shall have outside diameter (O.D.) equal to 95 percent (95%) of inside diameter (I.D.) of pipe. Inside diameter of pipe, for purpose of determining outside diameter of mandrel, shall be average outside diameter minus two (2) minimum wall thicknesses for O.D. controlled pipe and average inside diameter for I.D. controlled pipe, dimensions shall be per appropriate standard. Statistical or other "tolerance packages" shall not be considered in mandrel sizing.

B. Mandrel Design: Rigid mandrel shall be constructed of metal or rigid plastic material that can withstand 200 psi without being deformed. Mandrel shall have nine (9) or more "runners" or "legs" as long as total number of legs is odd number. Barrel section of mandrel shall have length of at least 75 percent (75%) of inside diameter of pipe. Rigid mandrel shall not have adjustable or collapsible legs which would allow reduction in mandrel diameter during testing. Provide and use proving ring for modifying each size mandrel.

C. Proving Ring: Furnish "proving ring" with each mandrel. Fabricate ring of 1/2-inch-thick, 3- inch-wide bar steel to diameter 0.02 inches larger than approved mandrel diameter.

D. Mandrel Dimensions (five percent (5%) allowance): Average inside diameter and minimum mandrel diameter are specified in Table 025330-5, Pipe vs. Mandrel Diameter, at end of this Section. Mandrels for higher strength, thicker wall pipe or other pipe not listed in table may be used when approved by the Engineer.

2.02 EXFILTRATION TEST

A. Water Meter: Obtain transient water meter from the Owner for use when water for testing will be taken from Owner system. Conform to Owner requirements for water meter use.

B. Test Equipment:

1. Pipe plugs.

2. Pipe risers where manhole cone is less than two (2) feet above highest point in pipe or service lead.

2.03 INFILTRATION TEST

A. Test Equipment:

1. Calibrated 90 degree V-notch weir.

2. Pipe plugs.

2.04 LOW PRESSURE AIR TEST

A. Minimum Requirement for Equipment:

1. Control panel.

2. Low-pressure air supply connected to control panel.

3. Pneumatic plugs: Acceptable size for diameter of pipe to be tested; capable of withstanding internal test pressure without leaking or requiring external bracing.

4. Air hoses from control panel to:

a. Air supply.

b. Pneumatic plugs.

c. Sealed line for pressuring.

d. Sealed line for monitoring internal pressure.

B. Testing Pneumatic Plugs: Place pneumatic plug in each end of length of pipe on ground. Pressurize plugs to 25 psig; then pressurize sealed pipe to five (5) psig. Plugs are acceptable when they remain in place against test pressure without external aids.

2.05 GROUND WATER DETERMINATION

A. Equipment: Pipe probe or small diameter casing for ground water elevation determination.

2.06 SMOKE TESTING

A. Equipment:

1. Pneumatic plugs.

2. Smoke generator as supplied by Superior Signal Company, or approved equal.

3. Blowers producing 2500 scfm minimum.

PART 3 EXECUTION

3.01 PREPARATION

A. Provide labor, equipment, tools, test plugs, risers, air compressor, air hose, pressure meters, pipe probe, calibrated weirs, or any other device necessary for proper testing and inspection.

B. Determine selection of test methods and pressures for gravity sanitary sewers based on ground water elevation. Determine ground water elevation using equipment and procedures conforming to Section 015780 – Control of Ground and Surface Water.

3.02 VISUAL INSPECTION OF GRAVITY SANITARY SEWERS

A. Check pipe alignment visually by flashing light between structures. Verify if alignment is true and no pipes are misplaced. In case of misalignment or damaged pipe, remove and relay or replace pipe segment.

3.03 MANDREL TESTING FOR GRAVITY SANITARY SEWERS

A. Perform deflection testing on flexible and semi-rigid pipe to confirm pipe has no more than five percent (5%) deflection. Mandrel testing shall conform to ASTM D 3034. Perform testing no sooner than 30 days after backfilling of line segment, but prior to final acceptance testing of line segment.

B. Pull approved mandrel by hand through sewer sections. Replace any section of sewer not passing mandrel. Mandrel testing is not required for stubs.

C. Retest repaired or replaced sewer sections.

3.04 LEAKAGE TESTING FOR GRAVITY COLLECTION SYSTEM PIPES

A. For a collection system pipe that will transport wastewater by gravity flow, test gravity sanitary sewer pipes for leakage by either exfiltration or infiltration methods, as appropriate, or with low pressure air testing.

B. Compensating for Ground Water Pressure:

1. Where ground water exists, install pipe nipple at same time sewer line is placed. Use 1/2-inch capped pipe nipple approximately 10 inches long. Make installation through manhole wall on top of sewer line where line enters manhole.

2. Immediately before performing line acceptance test, remove cap, clear pipe nipple with air pressure, and connect clear plastic tube to nipple. Support tube vertically and allow water to rise in tube. After water stops rising, measure height in feet of water over invert of pipe. Divide this height by 2.3 feet/psi to determine ground water pressure to be used in line testing.

C. Exfiltration test:

1. Determine ground water elevation.

2. Plug sewer in downstream manhole.

3. Plug incoming pipes in upstream manhole.

4. Install riser pipe in outgoing pipe of upstream manhole when highest point in service lead (house service) is less than two (2) feet below bottom of manhole cone.

5. Fill sewer pipe and manhole or pipe riser, when used, with water to point 2-1/2 feet above highest point in sewer pipe, house lead, or ground water table, whichever is highest.

6. Allow water to stabilize for one (1) to two (2) hours. Take water level reading to determine drop of water surface, in inches, over one-hour period, and calculate water loss(one (1) inch of water in four (4) feet diameter manhole equals 8.22 gallons) or measure quantity of water required to keep water at same level. Loss shall not exceed that calculated from allowable leakage according to Table 025330-1 at end of this Section.

D. Infiltration test: Ground water elevation must be not less than 2.0 feet above highest point of sewer pipe or service lead (house service).

1. Determine ground water elevation.

2. Plug incoming pipes in upstream manhole.

3. Insert calibrated 90 degree V-notch weir in pipe on downstream manhole.

4. Allow water to rise and flow over weir until it stabilizes.

E. Low Air Pressure Test: When using this test conform to ASTM C 828, ASTM C 924, or ASTM F 1417, as applicable, with holding time not less than that listed in Table 025330-2.

1. Low Pressure Air testing for sections of pipe shall be limited to lines less than 36- inch average inside diameter. Refer to charts 025330-2 and 025330-3.

2. Lines 36-inch average inside diameter and larger shall be tested at each joint. Minimum time allowable for pressure to drop from 3.5 pounds per square inch gauge to 2.5 pounds per square inch during joint test shall be 10 seconds, regardless of pipe size.

F. Retest: Repair and retest any section of pipe which fails to meet requirements.

3.05 TEST CRITERIA TABLES

A. Exfiltration and Infiltration Water Tests: Refer to Table 025330-1, Water Test Allowable Leakage, at end of this Section.

B. Low Pressure Air Test:

1. Times in Table 025330-2, Time Allowed for Pressure Loss from 3.5 psig to 2.5 psig, at end of this Section, are based on equation from Texas Commission on Environmental Quality (TCEQ) Design Criteria 217.57

$$T = 0.0850(D)(K)/(Q)$$

where: T = time for pressure to drop 1.0 pounds per square inch gauge in seconds

K = 0.000419 DL, but not less than 1.0

D = average inside diameter in inches

L = length of line of same pipe size in feet

Q = ~~rate of loss, 0.0015 ft^3/min./sq. ft. internal~~ surface

2. Since K value of less than 1.0 shall not be used, there are minimum testing times for each pipe diameter as given in Table 025330-3, Minimum Testing Times for Low Pressure Air Test.

    a. Notes:

        i. When two (2) sizes of pipe are involved, compute time by ratio of lengths involved.

        ii. Lines with 27-inch average inside diameter and larger may be air tested at each joint.

        iii. Lines with average inside diameter greater than 36 inches must be air tested for leakage at each joint.

        iv. If joint test is used, perform visual inspection of joint immediately after testing.

        v. For joint test, pipe is to be pressurized to 3.5 psi greater than pressure exerted by groundwater above pipe. Once pressure has stabilized, minimum times allowable for pressure to drop from 3.5 pounds per square inch gauge to 2.5 pounds per square inch gauge shall be 10 seconds.

3.06 LEAKAGE TESTING FOR MANHOLES

A. After completion of manhole construction, wall sealing, or rehabilitation, but prior to backfilling, test manholes for water tightness using hydrostatic or vacuum testing procedures.

B. Plug influent and effluent lines, including service lines, with suitably-sized pneumatic or mechanical plugs. Ensure plugs are properly rated for pressures required for test; follow manufacturer's safety and installation recommendations. Place plugs minimum of six (6) inches outside of manhole walls. Brace inverts to prevent lines from being dislodged when lines entering manhole have not been backfilled.

C. Vacuum testing:

1. Install vacuum tester head assembly at top access point of manhole and adjust for proper seal on straight top section of manhole structure. Following manufacturer's instructions and safety precautions, inflate sealing element to recommended maximum inflation pressure; do not over-inflate.

2. Evacuate manhole with vacuum pump to 10 inches mercury (Hg), disconnect pump, and monitor vacuum for time period specified in Table 025330-4, Vacuum Test Time Table.

3. A manhole passes the test if after 2.0 minutes and with all valves closed, the vacuum is at least 9.0 inches of mercury (Hg).

D. Perform hydrostatic exfiltration testing as follows:

1. Seal wastewater lines coming into manhole with internal pipe plug. Then fill manhole with water and maintain it full for at least one (1) hour.

2. The maximum leakage for hydrostatic testing shall be 0.025 gallons per foot diameter per foot of manhole depth per hour.

3. If water loss exceeds amount tabulated above, locate leaks, complete repairs necessary to seal manhole and repeat test procedure until satisfactory results are obtained.

3.07 SMOKE TEST PROCEDURES FOR POINT REPAIRS

A. Application: Perform smoke test to:

1. Locate points of line failure for point repair.

2. Determine when point repairs are properly made.

3. Determine when service connections have been reconnected to rehabilitated sewer.

4. Check integrity of connections to newly replaced service taps to liners and to existing private service connections.

B. Limitations: Do not backfill service taps until completion of this test. Test only those taps in single manhole section at one time. Keep number of open excavations to minimum.

C. Preparation: Prior to smoke testing, give written notices to area residents no fewer than two (2) days, nor more than seven (7) days, prior to proposed testing. Also give notice to local police and fire departments 24 hours prior to actual smoke testing.

D. Isolate Section: Isolate manhole section to be tested from adjacent manhole sections to keep smoke localized. Temporarily seal annular space at manhole for sliplined sections.

E. Smoke Introduction:

1. Operate equipment according to manufacturer's recommendation and as approved by the Engineer.

2. Conduct test by forcing smoke from smoke generators through sanitary sewer main and service connections. Operate smoke generators for minimum of five (5) minutes.

3. Introduce smoke into upstream and downstream manhole as appropriate. Monitor tap/connection for smoke leaks. Note sources of leaks.

F. Repair and Retest: Repair and replace taps or connections noted as leaking and then retest.

1. Taps and connections may be left exposed in only one (1) manhole section at a time.

2. When repair or replacement, testing or retesting, and backfilling of excavation is not completed within one (1) work day, properly barricade and cover each excavation as approved by the Engineer.

G. Service Connections: On houses where smoke does not issue from plumbing vent stacks:

1. Confirm reconnection of sewer service to newly installed liner pipe.

a. Perform dye test to confirm reconnection.

i. Introduce dye into service line through plumbing fixture inside structure or sewer cleanout immediately outside structure and flush with water.

ii. Observe flow at service reconnection or downstream manhole.

iii. Detection of dye confirms reconnection.

Table 025330-1
WATER TEST ALLOWABLE LEAKAGE

DIAMETER OF RISER OR STACK IN INCHES	VOLUME PER INCH OF DEPTH		ALLOWANCE LEAKAGE*	
	INCH	GALLONS	PIPE SIZE IN INCHES	GALLONS/MINUTE PER 100 FT.
1	0.7854	.0034	6	0.0039
2	3.1416	.0136	8	0.0053
2.5	4.9087	.0212	13	0.0066
3	7.0686	.0306	12	0.0079
4	12.5664	.0306	15	0.0099
5	19.6350	.0544	18	0.0118
6	28.2743	.1224	21	0.0138
8	50.2655	.2176	24	0.0158
			27	0.0177
			30	0.0197
			36	0.0237
			42	0.0276
For other diameters, multiply square of diameters by value for 1" diameter.			Equivalent to 50 gallons per inch of inside diameter per mile per 24 hours.	

* Allowable leakage rate must not exceed 10 gallons per inch of inside diameter per mile per 24 hours, when sewer is identified as located within 25-year flood plain.

Table 025330-2 ACCEPTANCE TESTING FOR SANITARY SEWERS

TIME ALLOWED FOR PRESSURE LOSS FROM 3.5 PSIG TO 2.5 PSIG														
Pipe Dia m. (in.)	Min. Time (min:sec)	Length For Min. Time (ft)	Time for Longer Length (sec)	Specification Time for Length (L) Shown (min:sec)										
				100 ft	150 ft	200 ft	250 ft	300 ft	350 ft	400 ft	450 ft	500 ft	550 ft	600 ft
6	5:40	398	0.8548	5:40	5:40	5:40	5:40	5:40	5:40	5:42	6:25	7:07	7:50	8:33
8	7:33	298	1.5196	7:33	7:33	7:33	7:33	7:36	8:52	10:08	11:24	12:40	13:56	15:12
10	9:27	239	2.4743	9:27	9:27	9:27	9:54	11:52	13:51	15:50	17:48	19:47	21:46	23:45
12	11:20	199	3.4190	11:20	11:20	11:20	14:15	17:06	19:57	22:48	25:39	28:30	31:20	34:11
15	14:10	159	5.3423	14:10	14:10	17:48	22:16	26:43	31:10	35:37	40:04	44:31	48:58	53:25
18	17:00	133	7.6928	17:00	19:14	25:39	32:03	38:28	44:52	51:17	57:42	64:06	70:31	76:56
21	19:50	114	10.4708	19:50	26:11	34:54	43:38	52:21	61:05	69:48	78:32	87:15	95:59	104:42
24	22:40	99	13.6762	22:48	34:11	45:35	56:59	68:23	79:47	91:10	102:34	113:58	125:22	136:46
27	25:30	88	17.3089	28:51	43:16	57:42	72:07	86:33	100:58	115:24	129:49	144:14	158:40	173:05
30	28:20	80	21.3690	35:37	53:25	71:14	89:02	106:51	124:39	142:28	160:16	178:05	195:53	213:41
33	31:10	72	25.8565	43:06	64:38	86:11	107:44	129:17	150:50	172:23	193:55	215:28	237:01	258:34

Table 025330-3

MINIMUM TESTING TIMES FOR LOW PRESSURE AIR TEST

PIPE DIAMETER *(INCHES)*	MINIMUMTIME *(SECONDS)*	LENGTH FOR MINIMUM TIME *(FEET)*	TIME FOR LONGERLENGTH *(SECONDS/FT)*
6	340	398	0.855
8	454	298	1.520
10	567	239	2.374
12	680	199	3.419
15	850	159	5.342
18	1020	133	7.693
21	1190	114	10.471
24	1360	100	13.676
27	1530	88	17.30
30	1700	80	21.369
33	1870	72	25.856

Table 025330-4
VACUUM TEST TIMETABLE

DEPTH IN FEET	TIME IN SECONDS BY PIPE DIAMETER		
	48”	60”	72”
4	10	13	16
8	20	26	32
12	30	39	48
16	40	52	64
20	50	65	80
24	60	78	96
*	5.0	6.5	8.0

* Add T times for each additional 2-foot depth.
(The values listed above have been extrapolated from ASTM C 1244)

Table 025330-5
PIPE VS. MANDREL DIAMETER

Material and Wall Construction	Nominal Size (Inches)	Average I.D. (Inches)	Minimum Mandrel Diameter (Inches)
PVC-Solid (SDR 26) 5.476	6	6	5.764
	8	7.715	7.329
	10	9.646	9.162
PVC-Solid (SDR 35) 11.150	12	12	11.737
	15	14.374	13.655
	18	17.629	16.748
	21	20.381	19.744
	24	23.381	22.120
	27	26.351	25.033
PVC-Truss 7.363		8	7.750
	10	9.750	9.263
	12	11.790	11.201
	15	14.770	14.032
PVC-Profile (ASTM F 794)	12	11.740	11.153
	15	14.370	13.652
	18	17.650	16.768
	21	20.750	19.713
	24	23.500	22.325
	27	26.500	25.175
	30	29.500	28.025
	36	35.500	33.725
	42	41.500	39.425
	48	47.500	45.125
HDPE-Profile	18	18.00	17.100
	21	21.00	19.950
	24	24.00	22.800
	27	27.00	25.650
	30	30.00	28.500
	36	36.00	34.200
	42	42.00	39.900
	48	48.00	45.600
	54	54.00	51.300
	60	60.00	57.000
Fiberglass 11.822 (Class SN 46)		12	12.85
	18	18.66	17.727
	20	20.68	19.646
	24	24.72	23.484
	30	30.68	29.146
	36	36.74	34.903
	42	42.70	40.565
	48	48.76	46.322
	54	54.82	52.079
	60	60.38	57.361

END OF SECTION

PART 1 GENERAL

1.01 SECTION INCLUDES

A. Design, construction, erection and removal of structural concrete formwork.

1.02 UNIT PRICES

A. No separate payment will be made for concrete formwork under this Section. Include payment in unit price for structural concrete.

B. Refer to Section 012700 - Measurement and Payment for unit price procedures.

1.03 REFERENCE STANDARDS

A. ACI 117 - Standard Tolerances for Concrete Construction and Materials.

B. ACI 347 - Recommended Practice for Concrete Formwork.

C. U.S. Product Standard PS 1 Construction and Industrial Plywood.

D. U.S. Product Standard PS 20 American Softwood Lumber Standard.

1.04 SUBMITTALS

A. Conform to Section 013300 – Submittal Procedures.

B. Shop Drawings: Show location, member size and loading of shoring. When reshoring is permitted, submit plans showing locations and member size of reshoring.

C. Product Data and Samples:

1. Form-coating Materials: Submit trade or brand names of manufacturers and complete description of products.

2. Form ties and related accessories, including taper tie plugs, if taper ties are used. Form gaskets.

D. Detailed Layout for Slip-forming: Submit detailed layout of proposed slip forming, including description of equipment, rate of progress, and other data to show suitability of method. Show provisions for ensuring attainment of required concrete surface finish.

PART 2 PRODUCTS

2.01 MATERIAL

A. Smooth Forms: New plywood, metal, plastic, tempered concrete-form hardboard, dressed lumber faced with plywood or fiberboard lining, or metal-framed plywood-faced panel material, to provide continuous, straight, smooth surfaces. Form material shall be free of raised grain, torn surfaces, worn edges, patches, dents or other defects. Furnish material in largest practical sizes to minimize number of joints and, when indicated on Drawings, conform to joint system indicated. Form material shall have sufficient strength and thickness to withstand pressure of newly placed concrete without bow or deflection.

B. Edge Forms and Intermediate Screed Strips: Type and strength compatible with the screed equipment and methods used.

C. Plastic Forms: One-piece forms for domes, beams and pan joists. Single lengths for columns not exceeding height of 7 feet 6 inches. For columns over 7 feet 6 inches, use 7-foot 6-inch sections and filler sections as needed. To facilitate removal of pan joist forms, taper sides one inch per foot.

D. Metal Pan Joist Forms: Removable type; fabricated of minimum 14-gauge steel; one piece between end closures. Adjustable forms not allowed. Taper sides one inch per foot to facilitate removal.

E. Earth Cuts for Forms:

1. Use earth cuts for forming unexposed sides of grade beams cast monolithically with slabs on grade.

2. Where sides of excavations are stable enough to prevent caving or sloughing, following surfaces may be cast against neat-cut excavations:

a. Sides of footings.

b. Inside face of perimeter grade beams not monolithic with slab on grade. When inside face is cast against earth, increase beam width indicated on Drawings by one inch.

a. Both faces of interior grade beams not monolithic with slab on grade. When grade beam is cast against earth, increase beam width indicated on Drawings by 2 inches.

F. Circular Forms:

1. Form round-section members with paper or fiber tubes, constructed of laminated plies using water-resistant adhesive with wax-impregnated exterior for weather and moisture protection. Provide units with sufficient wall thickness to resist loads imposed by wet concrete without deformation. Provide manufacturer's seamless units to minimize spiral gaps and seams.

2. Fiberglass or steel forms may be used for round-section members.

G. Shores: Wood or adjustable metal, with bearing plates; with double wedges at lower end.

H. Form Ties:

1. Use commercially-manufactured ties, hangers and other accessories for embedding in concrete. Do not use wire not commercially fabricated for use as a form accessory.

2. Fabricate ties so ends or end fasteners can be removed without causing spalling of concrete faces. Depth from formed concrete face to the embedded portion: At least 1 inch, or twice the minimum dimension of tie, whichever is greater.

3. Provide water stop feature for form ties used on liquid-containing structures and on concrete walls which will have earth backfill on one side.

4. Removable ties: Taper ties may be used when approved by the Project Manager. In the hole left by the removal of the taper tie, insert a preformed neoprene or polyurethane plug sized to seat at the center of the wall.

I. Form Coating: Commercial formulation of form oil or form-release agent having proven satisfactory performance. Coating shall not bond with, stain or otherwise adversely affect concrete surfaces, or impair their subsequent treatment, including application of bonding agents, curing compounds, paint, protective liners and membrane waterproofing.

J. Coating for Plastic Forms: Alkali-resistant gel-coat.

K. Chamfer Strips: Unless otherwise indicated on Drawings, provide 3/4-inch chamfer strips in corners of forms to produce beveled edges, if applicable.

2.02 DESIGN OF FORMWORK

A. Conform to ACI 117, ACI 347 and City building codes, unless more restrictive requirements are specified or shown on Drawings. Contractor shall design and engineer concrete formwork, including shoring and bracing. Design formwork for applicable gravity loads, lateral pressure, wind loads and allowable stresses. Camber formwork to compensate for anticipated deflection during placement of concrete when required to maintain specified tolerances. Design formwork to be readily removed without impact, shock or damage to concrete surfaces and adjacent materials.

B. Slip Forming: Permitted on written approval of Engineer. Contractor shall demonstrate suitability of method proposed.

PART 3 EXECUTION

3.01 INSTALLATION

A. Formwork Construction

1. Construct and maintain formwork so that it will maintain correct sizes of members, shape, alinement, elevation and position during concrete placement and until concrete has gained sufficient strength. Provide for required openings, offsets, sink ages, keyways, recesses, moldings, anchorages and inserts.

2. Construct forms for easy removal without damage to concrete surfaces.

3. Make formwork sufficiently tight to prevent leakage of cement paste during concrete placement. Solidly butt joints and provide backup material at joints as required to prevent leakage and fins. Provide gaskets for wall forms to prevent concrete paste leakage at their base.

4. Place chamfer strips in forms to bevel edges and corners permanently exposed to view, except top edges of walls, and slabs which are indicated on Drawings to be tooled. Do not bevel edges of formed joints and interior corners unless indicated on Drawings. Form beveled edges for vertical and horizontal corners of equipment bases. Unless otherwise indicated on Drawings, make bevels 3/4 inch wide.

5. Provide temporary openings at bases of column and wall forms and other points as required for observation and cleaning immediately before concrete is placed.

6. Where runways are required for moving equipment, support runways directly on the formwork or structural members. Do not allow runways or supports to rest on reinforcing steel.

7. Use smooth forms on formed concrete surfaces required to have smooth form finish or rubbed finish as specified in Section 033500 - Concrete Finishing.

8. Rough forms may be used on formed concrete surfaces indicated to have rough form finish as specified in Section 033500 - Concrete Finishing.

B. Forms for Surfaces Requiring Smooth Form Finish:

1. Drill forms to suit ties used and to prevent leakage of concrete mortar around tie holes. Uniformly space form ties and align in horizontal and vertical rows. Install taper ties, if used, with the large end on the wet face of the wall.

2. Provide sharp, clean corners at intersecting planes, without visible edges or offsets. Back up joints with extra studs or girts to maintain true, square intersections.

3. Form molding shapes, recesses and projections with smooth-finish materials and install in forms with sealed joints to prevent displacement.

4. Form exposed corners of beams and columns to produce square, smooth, solid, unbroken lines.

5. Provide exterior exposed edges with 3/4-inch chamfer or 3/4-inch radius.

6. Arrange facing material in orderly and symmetrical fashion. Keep number of joints to practical minimum. Support facing material adequately to prevent deflection in excess of allowable tolerances.

7. For flush surfaces exposed to view in completed structure, overlap previously- placed hardened concrete with form sheathing by approximately 1 inch. Hold forms against hardened concrete to maintain true surfaces, preventing offsets or loss of mortar.

C. Forms for Surfaces Requiring Rubbed Finish: Provide forms as specified in Paragraph 3.01B, Smooth Form Finish. Use smooth plywood or fiberboard linings or forms, in as large sheets as practicable, and with smooth, even edges and close joints.

D. Edge Forms and Screed Strips for Slabs: Set edge forms or bulkheads and intermediate screed strips for slabs to obtain required elevations and contours in finished slab surface. Provide and secure supports for types of screeds required.

E. Circular Forms: Set forms in one piece for full height of member.

F. Surfaces to Receive Membrane Waterproofing: Coordinate surface finish, anchors, reglets and similar requirements with membrane waterproofing applicator.

G. Fireproofing Steel Member: Construct forms to provide not less than the concrete thickness necessary, measured from face of steel member, to provide the required fire rating. Forms for concealed surfaces may be unlined.

H. Tolerances:

1. Unless noted otherwise on Drawings, construct formwork so concrete surfaces will conform to tolerance limits listed in Tables 031000A and 031000B at end of this Section.

2. Establish sufficient control points and bench marks as references for tolerance checks. Maintain these references in undisturbed condition until final completion and acceptance of the Work.

I. Adjustment of Formwork:

1. Use wedges or jacks to provide positive adjustment of shores and struts. After final inspection and before concrete placement, fasten in position wedges used for final adjustment of forms.

2. Brace forms securely against lateral deflections. Prepare to compensate for settling during concrete placement.

3. For wall openings, construct wood forms that facilitate necessary loosening to counteract swelling of forms.

3.02 PREPARATION OF FORM SURFACES

A. Clean surfaces of forms and embedded materials before placing concrete. Remove accumulated mortar, grout, rust and other foreign matter.

B. Coat forms for exposed or painted concrete surfaces with form oil or form-release agent before placing reinforcement. Cover form surfaces with coating material in accordance with manufacturer's printed instructions. Do not allow excess coating material to accumulate in forms or to contact hardened concrete against which fresh concrete will be placed. Remove coating material from reinforcement before placing concrete.

C. Forms for unexposed surfaces, other than retained-in-place metal forms, may be wet with water immediately before concrete placement in lieu of coating. When possibility of freezing temperatures exists, however, the use of coating is mandatory.

3.03 REMOVAL OF FORMS

A. Time Limits:

1. When repair of surface defects or finishing is required before concrete is aged, forms on vertical surfaces may be removed as soon as concrete has hardened sufficiently to resist damage from removal operations.

2. Remove top forms on sloping surfaces of concrete as soon as concrete has attained sufficient stiffness to prevent sagging. Loosen wood forms for wall openings as soon as this can be accomplished without damage to concrete. Leave formwork for water- retaining structures in place for at least 2 days. Formwork for non-water-retaining columns, walls, sides of beams and other formwork components not supporting weight of concrete may be removed after 12 hours, provided concrete has hardened sufficiently to resist damage from removal operations, and provided removal of forms will not disturb members supporting weight of concrete.

3. Forms and shoring supporting weight of concrete or construction loads: Leave in place until concrete has reached minimum strength specified for removal of forms and shoring. Do not remove such forms in less than 4 days.

B. Circular Paper or Spiral Tube Forms: Follow manufacturer's directions for form removal. Take necessary precautions to prevent damage to concrete surface. When removal is done before completion of curing time, replace form, tie in place and seal to retard escape of moisture.

C. Removal Strength:

1. Control Tests: Suitable strength-control tests will be required as evidence that concrete has attained specified strength for removal of formwork or shoring supporting weight of concrete in beams, slabs and other structural members. Furnish test cylinders and data to verify strength for early form removal.

a. Field-cured Test Cylinders: When field-cured test cylinders reach specified removal strength, formwork or shoring may be removed from respective concrete placements. Laboratory-cured Test Cylinders: When concrete has been cured as specified for structural concrete for same time period required by laboratory-cured cylinders to reach specified strength, formwork or shoring may be removed from respective concrete placements. Determine length of time that concrete has been cured by totaling the days or fractions of days, not necessarily consecutive, during which air temperature surrounding concrete is above 50 degrees F and concrete has been damp or thoroughly sealed against evaporation and loss of moisture.

2. Compressive Strengths: The minimum concrete compressive strength for removal of formwork supporting weight of concrete is 75 percent of specified minimum 28 day strength for class of concrete involved.

3.04 RESHORING

A. When reshoring is permitted, plan operations in advance and obtain City Engineer's approval of such operations. While reshoring is under way, keep live load off new construction. Do not permit concrete in any beam, slab, column or other structural member to be subjected to combined dead and construction loads in excess of loads permitted for developed concrete strength at time of reshoring.

B. Place reshores as soon as practicable after form-stripping operations are complete but in no case later than end of day on which stripping occurs. Tighten reshores to carry required loads without over stressing construction. Leave reshores in place until tests representative of concrete being supported have reached specified strength at time of removal of formwork supporting weight of concrete.

C. Floors supporting shores under newly-placed concrete: Leave original supporting shores in place, or re-shore. Locate reshores directly under shore position above. Extend reshoring over a sufficient number of stories to distribute weight of newly-placed concrete, forms and construction live loads in such manner that design superimposed loads of floors supporting shores are not exceeded.

3.05 FORM REUSE

A. Do not reuse forms that are worn or damaged beyond repair. Thoroughly clean and recoat forms before reuse. For wood and plywood forms to be used for exposed smooth finish, sand or otherwise dress concrete contact surface to original condition or provide form liner facing material. For metal forms, straighten, remove dents and clean to return forms to original condition.

END OF SECTION

PART 1 GENERAL

1.01 SECTION INCLUDES

A. This section gives requirements for concrete reinforcement. Coordinate the requirements of this section with all other sections of Division 3, Concrete.

1.02 REFERENCE STANDARDS

A. The latest editions of reference standards listed below form a part of this specification and are applicable to this project.

1. American Society for Testing and Materials:

a. ASTM A 61 5 “Deformed and Plain Billet-Steel Bars for Concrete Reinforcement”

b. ASTM A 185 “Specification for Welded Steel Wire Fabric for Concrete Reinforcement”.

2. American Concrete Institute:

a. ACI 315, “Manual of Standard Practice for Detailing Reinforced Concrete Structures”.

b. ACI 318, “Building Code Requirements for Reinforced Concrete”.

3. Concrete Reinforcing Steel Institute:

a. CRSI 163, “Recommended Practice for Placing Reinforcing Bars”.

b. CRSI 165, “Recommended Practice for Placing Bar Supports, Specifications and Nomenclature”.

1.03 SUBMITTALS

A. Certificates: Submit the manufacturer’s certificates giving the properties of steel proposed for use. List the manufacturer’s test number and heat number, chemical analysis, yield point, tensile strength and percent elongation. Also, identify on the certificates the proposed location of the steel in the work.

B. Bill of Materials: Submit bills of materials to be reviewed with shop drawings.

C. Shop Drawings: Submit shop drawings according to Division 1, General Requirements. Show reinforcement fabrication, bar placement location, splices, spacing and bar designation, bar type, length size, bending, number of bars, and other pertinent information, including dimensions. Information must correspond directly to data listed on the bill of material.

D. Provide sufficient detail to permit placement of reinforcement without use of design drawings. Reproduction of design drawings for use as shop drawings, will not be allowed. Begin fabrication of reinforcing steel after shop drawings have been reviewed by the engineer.

E. Refer to ACI reference standards for detailing, location, placing, splicing, etc. of reinforcing steel to be shown on shop drawings.

1.04 SCHEDULING

A. Schedule materials for delivery to the site so that items may be installed immediately upon delivery. Plan the schedule to accommodate other work, especially post-tensioning. Place items in the proper sequence so that removal and replacement to accommodate other work is avoided.

1.05 HANDLING

A. Store steel reinforcement above the ground on platforms, skids or other supports. Protect reinforcing, as far as practicable, from mechanical injury, surface deterioration and rusting caused by exposure to the weather.

1.06 INSPECTION

A. Make storage and fabrication facilities of the supplier and fabricator available for inspection by the engineer prior to and during fabrication.

1.07 PAYMENT

A. No separate payment will be made for work performed under this section. Include the cost of such work in the bid form and specified in other sections of this work.

PART 2 PRODUCTS

2.01 REINFORCEMENT

A. Deformed Bars: Use deformed bars conforming to ASTM A 61 5, grade 60 for all bars.

B. Marking: Clearly mark all bars with waterproof tags showing the number of bars, size, mark, length, and yield strength. Mark steel with the same designation as the member in which it occurs. Key marks to the concrete placement number as designated in the concrete placement sequence shown on the drawings.

C. Welded Wire Fabric: ASTM A 185, electrically-welded wire fabric of cold-drawn wire. Provide gage and mesh size as shown.

2.02 TIE WIRE

A. Use 18-gage annealed steel for tie wire.

2.03 ACCESSORIES

A. Provide chairs, riser bars, ties and other accessories made of plastic or metal, except as otherwise specified. Where concrete surfaces are exposed to the weather in finished work, provide plastic accessories only. Use of galvanized or plastic-tipped metal is not permitted in these locations. Use plastic accessories manufactured by W.H.C. Products, Inc., Houston, Texas, or preapproved equivalent.

2.04 PRECAST CONCRETE BAR SUPPORTS

A. Provide bar supports 3 inches wide, 6 inches long, and thick enough to allow the required cover. Embed tie wires in the 3-inch sides.

PART 3 EXECUTION

3.01 NOTIFICATION

A. Notify the Engineer at least 24 hours before concrete placement so that reinforcement may be inspected and errors corrected without delaying the work.

3.02 FABRICATION

A. Cold-form Bent Bars: Fabricate cold-form bent bars to the shapes shown on the Drawings. Do not straighten or rebend bars without specific approval. On the job, cut bars by shearing or sawing.

B. Splices: Use a minimum number of splices. Lap splices in strict accord with ACI 318 or as shown. Where it is necessary to splice reinforcement other than shown, the Engineer will determine the character of the splice. Do not make splices at points of maximum stress. Stagger splices in adjacent bars.

C. Fabrication Tolerances: Bars used for concrete reinforcement must conform to the following fabrication tolerances.

Measurement	Tolerance in Inches
Sheared length	± 1
Depth of truss bars to 8-inch depth	+ 0, - 1/4
Depth of truss bars over 8-inch depth	+ 0, - 1/2
Stirrups, ties and spirals	± 1/4
All other bends	± 1

3.03 PLACING

A. Condition of Reinforcement: Reinforcement must be free of injurious seams, flaws, cracks, scale, loose or flaky rust or other foreign material, including oil, mud or coating that will reduce the bond to concrete.

B. Placement Tolerances: Place reinforcement within the following tolerances.

Placement	Tolerance in Inches
Concrete cover to formed surfaces	± 1/4
Minimum spacing between bars	± 1/4
Top bars in slabs and beams to 8-inch depth	± 1/4
Top bars in slabs and beams between 8-inch and 24-inch depth	±1/2
Top bars in slabs and beams more than 24-inches in depth	± 1
Crosswise of members spaced evenly within	± 2
Lengthwise of members	± 2

C. Concrete Cover: Except as otherwise shown, provide a clear cover measured from reinforcement to the face of the concrete as listed.

Surfaces	Measurement in Inches
Interior not exposed to weather	
Slabs, joists and walls	3/4
Beams, girders and columns	1-1/2
Exterior not in contact with earth or water	
Slabs and walls, No. 6 and smaller bars	1
Slabs and walls, No. 7 and larger bars	1-1/2
Beams, girders and columns	2
Exterior in contact with earth or fresh water	
Slabs and walls, No. 6 and smaller bars	1-1/2
Slabs and walls, No. 7 and larger bars	2
Beams, girders and columns	2-1/2
Footings	
Top and sides	2
Bottom	3
Increase measurement under these conditions:	
Cover of top bars for slabs without wearing surface designed to carry vehicular traffic	1/2
When using No. 14 or No. 18 bars	1/2

3.04 ASSEMBLY

A. Reinforcing Bars in Forms: Use spacers, chairs, wire ties and other accessory items necessary to properly assemble, space and support reinforcing. Provide accessories of sufficient number, size and strength to adequately prevent deflection or displacement of reinforcement due to construction loads or concrete placement. Accessories recommended by CRSI will be used if not otherwise specified or shown. Accessories shall be of a size to provide concrete cover as previously specified. Use appropriate accessories to position and support bolts, anchors and other embedded items. Tie reinforcing bars at each intersection and to accessories. Blocking reinforcement upon concrete or masonry is prohibited.

B. Reinforcement for Concrete on Ground: Support reinforcement on precast concrete blocks spaced about 3 feet on centers each way. Use a minimum of one block for each 9 square feet. Tie blocks to at least one reinforcing bar using tie wires embedded in the block.

C. Welded Wire Fabric: For welded wire fabric designated as load carrying reinforcement, make lapped splices so that the Overlap measured between the outermost cross wires of each fabric sheet is not less than the spacing of cross wires plus 2 inches. Support as required for reinforcing bars.

1. For welded wire fabric not specifically designated as load carrying reinforcement, make lapped splices so that the overlap measured between the outermost cross wires of each fabric sheet is not less than 2 inches. Extend the fabric across supporting beams and walls to within 4 inches of concrete edges. Also, extend the fabric through contraction joints and construction joints, other than keyed joints in slabs on the ground.

D. Construction Joints: Provide continuous reinforcing through joints. As a general rule, place unscheduled joints at midspan. Obtain specific approval for jointing and bar splicing that is not indicated on the drawings. Splices shown on reviewed shop drawings are acceptable.

E. Interferences: If reinforcing interferes with the location of other reinforcing steel, conduits or embedded items request instructions from the Engineer. The Engineer need not be notified if the bars are moved to avoid such interferences unless the bars are moved more than one bar diameter or enough to exceed specified tolerances. Do not cut reinforcement to install inserts, conduits, mechanical openings or other items without approval.

F. Field Bending: Shape reinforcing bent during construction operations to conform to the drawings. Closely inspect the reinforcing for breaks. If reinforcing is damaged, replace, cadweld or otherwise repair as directed. Do not bed reinforcement after it is embedded in concrete.

G. Welding: Unless directed by the Engineer, do not weld reinforcing bars.

END OF SECTION

PART 1 GENERAL

1.01 SECTION INCLUDES

A. Joints for concrete paving; concrete sidewalks; and curbs, and curb and gutter.

1.02 REFERENCES

A. ASTM A615 - Standard Specification for Deformed and Plain Billet-Steel Bars for Concrete Reinforcement.

B. ASTM D994 - Standard Specification for Preformed Expansion Joint Filler for Concrete (Bituminous Type).

C. ASTM D1751 - Standard Specification for Preformed Expansion Joint Filler for Concrete Paving and Structural Construction (Nonextruding and Resilient Bituminous Types).

D. ASTM D3405 - Standard Specification for Joint Sealants, Hot-Poured, for Concrete and Asphalt Pavements.

1.03 SUBMITTALS

A. Submit product data and samples in accordance with requirements of Section 013300-Submittals.

B. Submit product data for joint sealing compound and proposed sealing equipment for approval.

C. Submit samples of dowel cup, metal supports, and deformed metal strip for approval.

PART 2 PRODUCTS

2.01 MATERIALS

A. Preformed Expansion Joint Material: Bituminous fiber and bituminous mastic composition material conforming to ASTM D994 and ASTM D1751.

B. Joint Sealing Compound: Hot-poured rubber-asphalt compound conforming to ASTM D3405.

C. Load Transmission Devices:

1. Smooth, steel dowel bars conforming to ASTM A615, Grade 60. When indicated on Drawings, encase one end of dowel bar in approved cap having inside diameter 1/16 inch greater than diameter of dowel bar.

2. Deformed steel tie bars conforming to ASTM A615, Grade 60.

3. Metal Supports for Reinforcing Steel and Joint Assembly: Employ metal supports of approved shape and size that will secure reinforcing steel and joint assembly in correct position during placing and finishing of concrete. Space supports as directed by Engineer.

PART 3 EXECUTION

3.01 PLACEMENT

A. When new work is adjacent to existing concrete, place joints at same location as existing joints in adjacent pavement.

B. If the limit of removal of existing concrete or asphaltic pavement does not fall on existing joint, saw cut existing pavement minimum of 1-1/2 inches deep to provide straight, smooth joint surface without chipping, spalling or cracks.

3.02 CONSTRUCTION JOINTS

A. Place transverse construction joint wherever concrete placement must be stopped for more than 30 minutes. Place longitudinal construction joints at interior edges of pavement lanes using No. 6 deformed tie bars, 30 inches long and spaced 18 inches on centers.

3.03 EXPANSION JOINTS

A. When pavement is 24 feet or narrower, use not more than 2 lengths of board. Secure pieces to form straight joint. Shape board filler accurately to cross section of concrete slab. Use load transmission devices of type and size shown on Drawings. Seal with joint sealing compound.

3.04 CONTRACTION JOINTS

A. Place contraction joints at same locations as in adjacent pavement or at spaces indicated on Drawings. Place smoothed, painted and oiled dowels accurately and normal to joint. Seal groove with joint sealing compound.

3.05 LONGITUDINAL WEAKENED PLANE JOINTS

A. Place longitudinal weakened plane joints at spaces indicated on Drawings. Seal groove with joint sealing compound.

3.06 SAWED JOINTS

A. Contractor may use sawed joints as an alternate to contraction and weakened plane joints. Circular cutter shall be capable of cutting straight line groove minimum of 1/2 inch wide. Depth shall be one quarter of pavement thickness plus 1/2 inch. Commence sawing as soon as concrete has hardened sufficiently to permit cutting without chipping, spalling or tearing and prior to initiation of cracks. Once sawing has commenced, it shall be continued until completed. Make saw cut with one pass. Complete sawing within 24 hours of concrete placement. Saw joints at required spacing consecutively in sequence of concrete placement.

B. Concrete Saw: Provide sawing equipment adequate in power to complete sawing to required dimensions and within required time. Provide at least one standby saw in good working order. Maintain an ample supply of saw blades at work site at all times during sawing operations. Sawing equipment shall be on job at all times during concrete placement.

3.07 JOINTS FOR CURB, CURB AND GUTTER

A. Place 3/4-inch preformed expansion joints through curb and gutters at locations of expansion and contraction joints in pavement; at end of radius returns at street intersections and driveways; and at curb inlets. Maximum spacing shall be 120-foot centers.

3.08 JOINTS FOR CONCRETE SIDEWALKS

A. Provide 3/4-inch expansion joints conforming to ASTM A1751 along and across sidewalk at back of curbs, at intersections with driveways, steps, and walls; and across walk at intervals not to exceed 36 feet. Provide expansion joint material conforming to ASTM D994 for small radius curves and around fire hydrants and utility poles. Extend the expansion joint material full depth of the slab.

3.10 JOINT SEALING

A. Seal joints only when surface and joints are dry, ambient temperature is above 50 degrees F and less than 85 degrees F, and weather is not foggy or rainy.

B. Joint sealing equipment shall be in first-class working condition and be approved by Engineer. Use concrete grooving machine or power-operated wire brush and other equipment such as plow, brooms, brushes, blowers or hydro or abrasive cleaning as required to produce satisfactory joints.

C. Clean joints of loose scale, dirt, dust and curing compound. Term joint includes wide joint spaces, expansion joints, dummy groove joints or cracks, either preformed or natural. Remove loose material from concrete surfaces adjacent to joints.

D. Fill joints neatly with joint sealer to depth shown. Pour sufficient joint sealer into joints so that, upon completion, surface of sealer within joint will be 1/4 inch below level of adjacent surface or at elevation as directed.

3.11 PROTECTION

A. Maintain joints in good condition until completion of Work.

B. Replace damaged joints material with new material as required by this Section.

END OF SECTION

PART 1 GENERAL

1.01 SECTION INCLUDES

A. Structural concrete reinforcement and grouting of reinforcement dowel bars into hardened concrete.

1.02 UNIT PRICES

A. No separate payment will be made for reinforcing steel. Bid work as shown in Section 004200-Bid.

1.03 REFERENCES

A. ACI 315 - Details and Detailing of Concrete Reinforcement.

B. ACI 318 - Building Code Requirements for Reinforced Concrete.

C. ASTM A36 - Standard Specification for Structural Steel.

D. ASTM A82 - Standard Specification for Steel Wire, Plain, for Concrete Reinforcement.

E. ASTM A185 - Standard Specification for Steel Welded Wire Fabric, Plain, for Concrete Reinforcement.

F. ASTM A497 - Standard Specification for Steel Welded Wire Fabric, Deformed, for Concrete Reinforcement.

G. ASTM A615 - Standard Specification for Deformed and Plain Billet-Steel Bars for Concrete Reinforcement.

H. ASTM A675 - Standard Specification for Steel Bars, Carbon, Hot-Wrought, Special Quality, Mechanical Properties.

I. ASTM A775/A775M - Standard Specification for Epoxy-Coated Reinforcing Steel Bars.

J. ASTM C881 - Specification for Epoxy-Resin-Base Bonding Systems for Concrete.

K. AWS D1.4 - Structural Welding Code - Reinforcing Steel.

L. WRI - Manual of Standard Practice for Welded Wire Fabric.

M. CRSI MSP-1 - Manual of Standard Practice.

1.04 SUBMITTALS

A. Conform to Section 013300 - Submittals.

B. Shop Drawings:

1. Submit shop drawings detailing reinforcement fabrication, bar placement location, splices, spacing, bar designation, bar type, length, size, bending, number of bars, bar support type and other pertinent information, including dimensions. Provide sufficient detail for placement of reinforcement without use of Contract Drawings. Information shall correspond directly to data listed on bill of materials.

2. Use of reproductions of Contract Drawings by Contractor, Subcontractor, erector, fabricator or material supplier in preparation of shop drawings (or in lieu of preparation of shop drawings) signifies acceptance by that party of information shown thereon as correct, and acceptance of obligation to pay for any job expense, real or implied, arising due to errors that may occur thereon. Remove references to Design Engineer, including seals, when reproductions of Contract Drawings are used as shop drawings.

3. Detail shop drawings in accordance with ACI 315, Figure 6.

4. Submit shop drawings showing location of proposed additional construction joints and obtain approval of Engineer, prior to submitting reinforcing steel shop drawings.

C. Bill of Materials: Submit with shop drawings.

D. Product Data:

1. Mechanical Bar Splices: Submit manufacturer's technical literature, including specifications and installation instructions.

2. Epoxy grout proposed for anchoring reinforcing dowels to hardened concrete: Submit manufacturer's technical literature including recommended installation procedures.

E. Certificates:

1. Submit steel manufacturer's certificates of mill tests giving properties of steel proposed for use. List manufacturer's test number, heat number, chemical analysis, yield point, tensile strength and percentage of elongation. Identify proposed location of steel in work.

2. Foreign-manufactured reinforcing bars shall be tested for conformance to ASTM requirements by a certified independent testing laboratory located in United States. Certification from any other source is not acceptable. Submit test reports for review. Do not begin fabrication of reinforcement until material has been approved.

1.05 HANDLING AND STORAGE

A. Store steel reinforcement above ground on platforms, skids or other supports. Protect reinforcing from mechanical injury, surface deterioration and formation of excessive, loose or flaky rust caused by exposure to weather. Protect epoxy-coated reinforcing from formation of any amount of rust.

1.06 QUALITY ASSURANCE

A. Notify Engineer at least 48 hours before concrete placement so that reinforcement may be inspected, and errors corrected, without delaying Work.

PART 2 PRODUCTS

2.01 MATERIAL

A. Reinforcing Bars: Deformed bars conforming to ASTM A615, grade as indicated on Drawings, except column spirals and those shown on Drawings to be smooth bars. Where grade is not shown on Drawings, use Grade 60.

B. Smooth Bars: Where indicated on Drawings, use smooth bars conforming to ASTM A36; ASTM A615, Grade 60; or ASTM A675, Grade 70.

C. Column Spirals: Bars conforming to ASTM A615, Grade 60, or wire conforming to ASTM A82.

D. Epoxy-Coated Deformed Bars, Column Spirals and Smooth Bars: Conform to ASTM A775/A775M.

E. Welded Wire Fabric:

1. Welded Smooth Wire Fabric: Conform to ASTM A185.

2. Welded Deformed Wire Fabric: Conform to ASTM A497.

3. Provide wire size, type and spacing as shown. Where type is not shown on Drawings, use welded smooth wire fabric.

4. Furnish welded wire fabric in flat sheets only.

F. Tie Wire: 16-1/2 gage or heavier annealed steel wire. Use plastic-coated tie wire with epoxy-coated reinforcing steel.

G. Bar Supports: Provide chairs, riser bars, ties and other accessories made of plastic or metal, except as otherwise specified. Use bar supports and accessories of sizes required to provide required concrete cover. Where concrete surfaces are exposed to weather, water or wastewater, provide plastic accessories only; do not use galvanized or plastic-tipped metal in such locations. Provide metal bar supports and accessories rated Class 1 or 2 conforming to CRSI MSP-1 Manual of Standard Practice. Use epoxy-coated bar supports with epoxy-coated reinforcing bars.

H. Slabs on Grade: Provide chairs with sheet metal bases or provide precast concrete bar supports 3 inches wide, 6 inches long, and thick enough to allow required cover. Embed tie wires in 3-inch by 6-inch side.

I. Mechanical Bar Splices:

1. Conform to ACI 318; use where indicated on Drawings.

   a. Compression splices shall develop ultimate stress of reinforcing bar.

   b. Tension splices shall develop 125 percent of minimum yield point stress of reinforcing bar.

2. Regardless of chemical composition of steel, any heat effect shall not adversely affect performance of reinforcing bar.

J. Welded Splices:

1. Provide welded splices where shown and where approved by the Engineer. Welded splices of reinforcing steel shall develop a tensile strength exceeding 125 percent of the yield strength of the reinforcing bars connected.

2. Provide materials for welded splices conforming to AWS D1.4.

K. Epoxy Grout: High-strength rigid epoxy adhesive, conforming to ASTM C881, Type IV, manufactured for purpose of anchoring dowels into hardened concrete and the moisture condition, application temperature and orientation of the hole to be filled. Unless otherwise shown, depth of embedment shall be as required to develop the full tensile strength (125 percent of yield strength) of dowel, but not less than 12 diameters.

2.02 FABRICATION

A. Bending: Fabricate bars to shapes indicated on Drawings by cold bending. Bends shall conform to minimum bend diameters specified in ACI 318. Do not straighten or rebend bars. Fabricate epoxy-coated reinforcing steel to required shapes in a manner that will not damage epoxy coating. Repair any damaged epoxy coating with patching material conforming to Item 4.4 of ASTM A775/A775M.

B. Splices:

1. Locate splices as indicated on Drawings. Do not locate splices at other locations without approval of Engineer. Use minimum number of splices located at points of minimum stress. Stagger splices in adjacent bars.

2. Length of lap splices: As shown on Drawings.

3. Prepare ends of bars at mechanical splices in accordance with splice manufacturer's requirements.

C. Construction Joints: Unless otherwise shown, continue reinforcing through construction joints.

D. Bar Fabrication Tolerances: Conform to tolerances listed in ACI 315, Figures 4 and 5.

E. Standard Hooks: Conform to the requirements of ACI 318.

F. Marking: Clearly mark bars with waterproof tags showing number of bars, size, mark, length and yield strength. Mark steel with same designation as member in which it occurs.

PART 3 EXECUTION

3.01 PREPARATION

A. Clean reinforcement of scale, loose or flaky rust and other foreign material, including oil, mud or coating that will reduce bond to concrete.

3.02 INSTALLATION

A. Placement Tolerances: Place reinforcement within tolerances of Table 032100A at the end of this Section. Bend tie wire away from forms to maintain the specified concrete coverage.

B. Interferences: Maintain 2-inch clearance from embedded items. Where reinforcing interferes with location of other reinforcing steel, conduit or embedded items, bars may be moved within specified tolerances or one bar diameter, whichever is greater. Where greater movement of bars is required to avoid interference, notify Engineer. Do not cut reinforcement to install inserts, conduit, mechanical openings or other items without approval of Engineer.

C. Concrete Cover: Provide clear cover measured from reinforcement to face of concrete as listed in Table 032100B at the end of this Section, unless otherwise indicated on Drawings.

D. Placement in Forms: Use spacers, chairs, wire ties and other accessory items necessary to assemble, space and support reinforcing properly. Provide accessories of sufficient number, size and strength to prevent deflection or displacement of reinforcement due to construction loads or concrete placement. Use appropriate accessories to position and support bolts, anchors and other embedded items. Tie reinforcing bars at each intersection, and to accessories. Blocking reinforcement with concrete or masonry is prohibited.

E. Placement for Concrete on Ground: Support bar and wire reinforcement on chairs with sheet metal bases or precast concrete blocks spaced at approximately 3 feet on centers each way. Use minimum of one support for each 9 square feet. Tie supports to reinforcing bars and wires.

F. Vertical Reinforcement in Columns: Offset vertical bars by at least one bar diameter at splices. Provide accurate templates for column dowels to ensure proper placement.

G. Splices:

1. Do not splice bars, except at locations indicated on Drawings or reviewed shop drawings, without approval of Engineer.

2. Lap Splices: Unless otherwise shown or noted, Class B, conforming to ACI 318-89, Section 12.15.1. Tie securely with wire prior to concrete placement, to prevent displacement of splices during concrete placement.

3. Mechanical Bar Splices: Use only where indicated on Drawings or approved by the Engineer. Install in accordance with manufacturer's instructions.

    a. Couplers located at a joint face shall be of a type which can be set either flush or recessed from the face as shown. Seal couplers prior to concrete placement to completely eliminate concrete or cement paste from entering.

    b. Couplers intended for future connections: Recess 1/2 inch minimum from concrete surface. After concrete is placed, plug coupler and fill recess with sealant to prevent contact with water or other corrosive materials.

    c. Unless noted otherwise, match mechanical coupler spacing and capacity to that shown for the adjacent reinforcing.

H. Construction Joints: Place reinforcing continuous through construction joints, unless noted otherwise.

I. Welded Wire Fabric: Install wire fabric in as long lengths as practicable. Unless otherwise indicated on Drawings, lap adjoining pieces at least 6 inches or one full mesh plus 2 inches, whichever is larger. Lace splices with wire. Do not make end laps midway between supporting beams, or directly over beams of continuous structures. Offset end laps in adjacent widths to prevent continuous laps. Conform to WRI - Manual of Standard Practice for Welded Wire Fabric.

J. Field Bending: Shape reinforcing bent during construction operations to conform to Drawings. Bars shall be cold-bent; do not heat bars. Closely inspect reinforcing for breaks. When reinforcing is damaged, replace, Cadweld, or otherwise repair, as directed by Engineer. Do not bend reinforcement after it is embedded in concrete.

K. Epoxy-coated Reinforcing Steel: Install in accordance with Paragraph 3.02J, Field Bending, and in a manner that will not damage epoxy coating. Repair damaged epoxy coating with patching material as specified in Paragraph 2.02A, Bending.

L. Field Cutting: Cut reinforcing bars by shearing or sawing. Do not cut bars with cutting torch.

M. Welding of reinforcing bars is prohibited, except where shown on Drawings.

3.03 GROUTING OF REINFORCING AND DOWEL BARS

A. Use epoxy grout for anchoring reinforcing and dowel steel to existing concrete in accordance with epoxy manufacturer's instructions. Drill hole not more than 1/4 inch larger than steel bar diameter (including height of deformations for deformed bars) in existing concrete. Just before installation of steel, blow hole clean of all debris using compressed air. Partially fill hole with epoxy, using enough epoxy so when steel bar is inserted, epoxy grout will completely fill hole around bar. Dip end of steel bar in epoxy and twist bar while inserting into partially-filled hole.

TABLE 032100A
REINFORCEMENT PLACEMENT TOLERANCES

PLACEMENT	TOLERANCE IN INCHES
Clear Distance -	
To formed soffit:	-1/4
To other formed surfaces:	□1/4
Minimum spacing between bars:	-1/4
Clear distance from unformed surface to top reinforcement -	
Members 8 inches deep or less:	□1/4
Members more than 8 inches deep but less than 24 inches deep:	-1/4, +1/2
Members 24 inches deep or greater:	-1/4, +1
Uniform spacing of bars (but the required number of bars shall not be reduced):	□2
Uniform spacing of stirrups and ties (but the required number of stirrups and ties shall not be reduced):	□1
Longitudinal locations of bends and ends of reinforcement -	
General:	□2
Discontinuous ends of members: Length of bar laps:	□1/2 -1-1/2
Embedded length -	
For bar sizes No. 3 through 11:	-1
For bar sizes No. 14 and 18:	-2

TABLE 032100B
MINIMUM CONCRETE COVER FOR REINFORCEMENT

SURFACE	MINIMUM COVER IN INCHES
Slabs and Joists -	
Top and bottom bars for dry conditions -	
No. 14 and No. 18 bars:	1-1/2
No. 11 bars and smaller:	1
Formed concrete surfaces exposed to earth, water or weather; over, or in contact with, sewage; and for bottoms bearing on work mat, or slabs supporting earth cover -	
No. 5 bars and smaller:	1-1/2
No. 6 through No. 18 bars:	2
Beams and Columns -	
For dry conditions -	
Stirrups, spirals and ties:	1-1/2
Principal reinforcement:	2
Exposed to earth, water, sewage or weather -	
Stirrups and ties:	2
Principal reinforcement:	2-1/2
Walls -	
For dry conditions -	
No. 11 bars and smaller:	1
No. 14 and No. 18 bars:	1-1/2
Formed concrete surfaces exposed to earth, water, sewage or weather, or in contact with ground -	
Circular tanks with ring tension:	2
All others:	2
Footings and Base Slabs -	
At formed surfaces and bottoms bearing on concrete work mat:	
At unformed surfaces and bottoms in contact with earth:	2
Over top of piles:	3
Top of footings -- same as slabs	2

END OF SECTION

PART 1 GENERAL

1.01 SECTION INCLUDES

A. Cast-in-place concrete work for utility construction or rehabilitation, such as slabs on grade, small vaults, site-cast bases for precast units, and in-place liners for manhole rehabilitation.

1.02 MEASUREMENT AND PAYMENT

A. Unit Prices.

1. No payment will be made for concrete for utility construction under this Section. Include cost in applicable utility structure.

2. Obtain the services of and pay for a certified testing laboratory to prepare design mixes.

3. Refer to Section 012700 - Measurement and Payment for unit price procedures.

B. Stipulated Price (Lump Sum). If the Contract is a Stipulated Price Contract, payment for work in this Section is included in the total Stipulated Price.

1.03 REFERENCES

A. ACI 117 - Standard Tolerances for Concrete Construction and Materials.

B. ACI 211.1 - Standard Practice for Selecting Proportions for Normal, Heavyweight and Mass Concrete.

C. ACI 302.1R - Guide for Concrete Floor and Slab Construction.

D. ACI 304R - Guide for Measuring, Mixing, Transporting, and Placing Concrete.

E. ACI 308 - Standard Practice for Curing Concrete.

F. ACI 309R - Guide for Consolidation of Concrete.

G. ACI 311 - Batch Plant Inspection and Field Testing of Ready Mixed Concrete.

H. ACI 315 - Manual of Standard Practice for Detailing Reinforced Concrete Structures.

I. ACI 318 - Building Code Requirements for Reinforced Concrete.

J. ACI 544 - Guide for Specifying, Mixing, Placing, and Finishing Steel Fiber Reinforced Concrete.

K. ASTM A 82 - Standard Specification for Steel Wire, Plain, for Concrete Reinforcement.

L. ASTM A 185 - Standard Specification for Steel Welded Wire Fabric, Plain, for Concrete Reinforcement.

M. ASTM A 615 - Standard Specification for Deformed and Plain Billet-Steel Bars for Concrete Reinforcement.

N. ASTM A 767 - Standard Specifications for Zinc-coated (Galvanized) Bars for Concrete Reinforcement.

O. ASTM A 775 - Standard Specification for Epoxy-Coated Reinforcing Steel Bars.

P. ASTM A 820 - Steel Fibers for Fiber Reinforced Concrete.

Q. ASTM A 884 - Specification for Epoxy-coated Steel Wire and Welded Wire Fabric for Reinforcement.

R. ASTM C 31 - Standard Practice for Making and Curing Concrete Test Specimens in the Field.

S. ASTM C 33 - Standard Specification for Concrete Aggregates.

T. ASTM C 39 - Standard Test Method for Compressive Strength of Cylindrical Concrete Specimens.

U. ASTM C 42 - Standard Method of Obtaining and Testing Drilled Cores and Sawed Beams of Concrete.

V. ASTM C 94 - Standard Specification for Ready-Mixed Concrete.

W. ASTM C 138 - Standard Test Method for Unit Weight Yield and Air Content (Gravimetric) of Concrete.

X. ASTM C 143 - Standard Test Method for Slump of Hydraulic Cement Concrete.

Y. ASTM C 150 - Standard Specification for Portland Cement.

Z. ASTM C 172 - Standard Practice for Sampling Freshly Mixed Concrete.

AA. ASTM C 173 - Standard Test Method for Air Content of Freshly Mixed Concrete by Volumetric Method.

AB. ASTM C 231 - Standard Test Method for Air Content of Freshly Mixed Concrete by the Pressure Method.

AC. ASTM C 260 - Standard Specification for Air-Entraining Admixtures for Concrete.

AD. ASTM C 309 - Standard Specifications for Liquid Membrane-Forming Compounds for Curing Concrete.

AE. ASTM C 494 - Standard Specification for Chemical Admixtures for Concrete.

AF. ASTM C 595 - Standard Specification for Blended Hydraulic Cements.

AG. ASTM C 685 - Standard Specification for Concrete Made by Volumetric Batching and Continuous Mixing.

AH. ASTM C 1017 - Chemical Admixtures for Use in Producing Flowing Concrete.

AI. ASTM C 1064 - Standard Test Method for Temperature of Freshly Mixed Portland Cement Concrete.

AJ. ASTM C 1077 - Standard Practice for Laboratory Testing of Concrete and Concrete Aggregate for Use in Construction and Criteria for Laboratory Evaluation.

AK. ASTM D 638 - Test Method for Tensile Properties of Plastics.

AL. ASTM D 746 - Test Method for Brittleness Temperature of Plastics and Elastomers by Impact.

AM. ASTM D 747 - Test Method for Apparent Bending Modulus of Plastics by Means of a Cantilever Beam.

AN. CRSI MSP-1 - Manual of Standard Practice.

AO. CRSI - Placing Reinforcing Bars.

AP. Federal Specification SS-S-210A - Sealing Compound, Preformed Plastic, for Expansion Joints and Pipe Joints

AQ. NRMCA - Concrete Plant Standards.

1.04 SUBMITTALS

A. Conform to Section 013300 - Submittal Procedures.

B. Submit proposed mix design and test data for each type and strength of concrete in the Work.

C. Submit laboratory reports prepared by an independent testing laboratory stating that materials used comply with requirements of this Section.

D. Submit manufacturer's mill certificates for reinforcing steel. Provide specimens for testing when required by the Engineer.

E. Submit certification from concrete supplier that materials and equipment used to produce and deliver concrete comply with this Specification.

F. When required on Drawings, submit shop drawings showing reinforcement type, quantity, size, length, location, spacing, bending, splicing, support, fabrication details, and other pertinent information.

G. For waterstops, submit product information sufficient to indicate compliance with this Section, including manufacturer's descriptive literature and specifications.

1.05 HANDLING AND STORAGE

A. Cement: Store cement off of the ground in a well-ventilated, weatherproof building.

B. Aggregate: Prevent mixture of foreign materials with aggregate and preserve gradation of aggregate.

C. Reinforcing Steel: Store reinforcing steel to protect it from mechanical injury and formation of rust. Protect epoxy-coated steel from damage to the coating.

PART 2 PRODUCTS

2.01 CONCRETE MATERIALS

A. Cementitious Material:

1. Portland Cement: ASTM C 150, Type II, unless the use of Type III is authorized by the Engineer; or ASTM C 595, Type IP. For concrete in contact with sewage use Type II cement.

2. When aggregates are potentially reactive with alkalis in cement, use cement not exceeding 0.6 percent alkali content in the form of Na2O + 0.658K20.

B. Water: Clean, free from harmful amounts of oils, acids, alkalis, or other deleterious substances, and meeting requirements of ASTM C 94.

C. Aggregate:

1. Coarse Aggregate: ASTM C 33. Unless otherwise indicated, use the following ASTM standard sizes: No. 357 or No. 467; No. 57 or No. 67, No. 7. Maximum size: Not larger than 1/5 of the narrowest dimension between sides of forms, nor larger than 3/4 of minimum clear spacing between reinforcing bars.

2. Fine Aggregate: ASTM C 33.

3. Determine the potential reactivity of fine and coarse aggregate in accordance with the Appendix to ASTM C 33.

D. Air Entraining Admixtures: ASTM C 260.

E. Chemical Admixtures:

1. Water Reducers: ASTM C 494, Type A.

2. Water Reducing Retarders: ASTM 494, Type D.

3. High Range Water Reducers (Superplasticizers): ASTM C 494, Types F and G.

F. Prohibited Admixtures: Admixtures containing calcium chloride, thiocyanate, or materials that contribute free chloride ions in excess of 0.1 percent by weight of cement.

G. Reinforcing Steel:

1. Use new billet steel bars conforming to ASTM A 615, ASTM A 767, or ASTM A 775, grade 40 or grade 60, as shown on Drawings. Use deformed bars except where smooth bars are specified. When placed in work, keep steel free of dirt, scale, loose or flaky rust, paint, oil or other harmful materials.

2. Where shown, use welded wire fabric with wire conforming to ASTM A 185 or ASTM A 884. Supply the gauge and spacing shown, with longitudinal and transverse wires electrically welded together at points of intersection with welds strong enough not to be broken during handling or placing.

3. Wire: ASTM A 82. Use 16-1/2 gauge minimum for tie wire, unless otherwise indicated.

H. Fiber:

1. Fibrillated Polypropylene Fiber:

   a. Addition Rate: 1.5 pounds of fiber per cubic yard of concrete.

   b. Physical Properties:

      i. Material: Polypropylene.

      ii. Length: 1/2 inch or graded

      iii. Specific Gravity: 0.9l.

   c. Acceptable Manufacturer: W. R. Grace Company, Fibermesh, or approved equal.

2. Steel Fiber: Comply with applicable provisions of ACI 544 and ASTM A 820.

   a. Ratio: 50 to 200 pounds of fiber per cubic yard of concrete.

   b. Physical Properties

      i. Material: Steel.

      ii. Aspect Ratio (for fiber lengths of 0.5 to 2.5 inch, length divided by diameter or equivalent diameter): 30:1 to 100:1.

      iii. Specific Gravity: 7.8.

      iv. Tensile Strength: 40-400 ksi.

      v. Young's Modulus: 29,000 ksi.

      vi. Minimum Average Tensile Strength: 50,000 psi.

vii. Bending Requirements: Withstand bending around 0.125-inch diameter mandrel to an angle of 90 degrees, at temperatures not less than 60 degrees F, without breaking.

I. Curing Compounds: Type 2 white-pigmented liquid membrane-forming compounds conforming to ASTM C 309.

2.02 FORMWORK MATERIALS

A. Lumber and Plywood: Seasoned and of good quality, free from loose or unsound knots, knot holes, twists, shakes, decay and other imperfections which would affect strength or impair the finished surface of concrete. Use S4S lumber for facing or sheathing. Forms for bottoms of caps: At least 2-inch (nominal) lumber, or 3/4-inch form plywood backed adequately to prevent misalignment. For general use, provide lumber of 1-inch nominal thickness or form plywood of approved thickness.

B. Formwork for Exposed Concrete Indicated to Receive Rubbed Finish: Form or form-lining surfaces free of irregularities; plywood of 1/4-inch minimum thickness, preferably oiled at the mill.

C. Chamfer Strips and Similar Moldings: Redwood, cypress, or pine that will not split when nailed and which can be maintained to true line. Use mill-cut molding dressed on all faces.

D. Form Ties: Metal or fiberglass of approved type with tie holes not larger than 7/8 inch in diameter. Do not use wire ties or snap ties.

E. Metal Forms: Clean and in good condition, free from dents and rust, grease, or other foreign materials that tend to disfigure or discolor concrete in a gauge and condition capable of supporting concrete and construction loads without significant distortion. Countersink bolt and rivet heads on facing sides. Use only metal forms which present a smooth surface and which line up properly.

2.03 PRODUCTION METHODS

A. Use either ready-mixed concrete conforming to requirements of ASTM C 94, or concrete produced by volumetric batching and continuous mixing in accordance with ASTM C 685.

2.04 MEASUREMENT OF MATERIALS

A. Measure dry materials by weight, except volumetric proportioning may be used when concrete is batched and mixed in accordance with ASTM C 685.

B. Measure water and liquid admixtures by volume.

2.05 DESIGN MIX

A. Use design mixes prepared by a certified testing laboratory in accordance with ASTM C 1077 and conforming to requirements of this section.

B. Proportion concrete materials based on ACI 211.1 to comply with durability and strength requirements of ACI 318, Chapters 4 and 5, and this specification. Prepare mix design of Class A concrete so minimum cementitious content is 564 pounds per cubic yard. Submit concrete mix designs to the Engineer for review.

C. Proportioning on the basis of field experience or trial mixtures in accordance with requirements at Section 5.3 of ACI 318 may be used, if approved by the Engineer.

D. Classification:

Class	Type Structural	Minimum Compressive Strength (Lbs/Sq. In.)		Maximum W/C Ratio	Air Content (Percent)	Consistency Range In Slump (Inches)
		7-day	28-day			
A		3200	4000	0.45	4± 1	2 to 4*
B	Pipe Block Fill, Thrust Block	----	1500	----	4± 1	5 to 7
*When ASTM C 494, Type F or Type G admixture is used to increase workability, this range may be 6 to 9.						

E. Add steel or polypropylene fibers only when called for on the Drawings or in another section of these Specifications.

F. Determine air content in accordance with ASTM C 138, ASTM C 173 or ASTM C 231.

G. Use of Concrete Classes: Use classes of concrete as indicated on the Drawings and other Specifications. Use Class B for unreinforced concrete used for plugging pipes, seal slabs, thrust blocks, trench dams, and concrete fill unless indicated otherwise. Use Class A for all other applications.

2.06 PVC WATERSTOPS

A. Extrude from virgin polyvinyl chloride elastomer. Use no reclaimed or scrap material. Submit waterstop manufacturer's current test reports and manufacturer's written certification that the material furnished meets or exceeds Corps of Engineers Specification CRD-C572 and other specified requirements.

B. Flat Strip and Center-Bulb Waterstops:

1. Thickness: not less than 3/8 inch

2. Acceptable Manufacturers:

a. Kirkhill Rubber Co., Brea, California

b. Water Seals, Inc., Chicago, Illinois

c. Progress Unlimited, Inc., New York, New York

d. Greenstreak Plastic Products Co., St. Louis, Missouri

e. Approved equal.

2.07 RESILIENT WATERSTOP

A. Resilient Waterstop: Where shown on the Drawings; either a bentonite- or adhesive-type material.

B. Bentonite Waterstop:

1. Material: 75 percent bentonite, mixed with butyl rubber-hydrocarbon containing less than 1.0 percent volatile matter, and free of asbestos fibers or asphaltics.

2. Manufacturer's rated temperature ranges: For application, 5 to 125 degrees F; in service, -40 to 212 degrees F.

3. Cross-sectional dimensions, unexpanded waterstop: 1 inch by 3/4 inch.

4. Provide with adhesive backing capable of producing excellent adhesion to concrete surfaces.

C. Adhesive Waterstop:

1. Preformed plastic adhesive waterstop at least 2 inches in diameter.

2. Meets or exceeds requirements of Federal Specification SS-S-210A.

3. Supplied wrapped completely by a 2-part protective paper.

4. Submit independent laboratory tests verifying that the material seals joints in concrete against leakage when subjected to a minimum of 30 psi water pressure for at least 72 hours.

5. Provide primer, to be used on hardened concrete surfaces, from the same manufacturer who supplies the waterstop material.

6. Acceptable Manufacturer: Synko-Flex Preformed Plastic Adhesive Waterstop, Synko-Flex Products, Inc.; or approved equal.

PART 3 EXECUTION

3.01 FORMS AND SHORING

A. Provide mortar-tight forms sufficient in strength to prevent bulging between supports. Set and maintain forms to lines designated such that finished dimensions of structures are within the tolerances specified in ACI 117. Construct forms to permit removal without damage to concrete. Forms may be given slight draft to permit ease of removal. Provide adequate cleanout openings. Before placing concrete, remove extraneous matter from within forms.

B. Install rigid shoring having no excessive settlement or deformation. Use sound timber in shoring centering. Shim to adjust and tighten shoring with hardwood timber wedges.

C. Design Loads for Horizontal Surfaces of Forms and Shoring: Minimum fluid pressure, 175 pounds per cubic foot; live load, 50 pounds per square foot. Maximum unit stresses: 125 percent of allowable stresses used for form materials and for design of support structures.

D. Back formwork with a sufficient number of studs and wales to prevent deflection.

E. Re-oil or lacquer the liner on the job before using. Facing may be constructed of 3/4-inch plywood made with waterproof adhesive backed by adequate studs and wales. In such cases, form lining will not be required.

F. Unless otherwise indicated, form outside corners and edges with triangular 3/4-inch chamfer strips (measured on sides).

G. Remove metal form ties to depth of at least 3/4 inch from surface of concrete. Do not burn off ties. Do not use pipe spreaders. Remove spreaders which are separate from forms as concrete is being placed.

H. Treat facing of forms with approved form coating before concrete is placed. When directed by Engineer, treat both sides of face forms with coating. Apply coating before reinforcement is placed. Immediately before the concrete is placed, wet surface of forms which will come in contact with concrete.

3.02 PLACING REINFORCEMENT

A. Place reinforcing steel accurately in accordance with approved Drawings. Secure steel adequately in position in forms to prevent misalignment. Maintain reinforcing steel in place using approved concrete and hot-dip galvanized metal chairs and spacers. Place reinforcing steel in accordance with CRSI Publication "Placing Reinforcing Bars." Request inspection of reinforcing steel by the Engineer and obtain acceptance before concrete is placed.

B. Minimum spacing center-to-center of parallel bars: 2-1/2 times nominal bar diameter. Minimum cover measured from surface of concrete to face of reinforcing bar unless shown otherwise on the Drawings: 3 inches for surfaces cast against soil or subgrade, 2 inches for other surfaces.

C. Detail bars in accordance with ACI 315. Fabricate reinforcing steel in accordance with CRSI Publication MSP-1, "Manual of Standard Practice." Bend reinforcing steel to required shape while steel is cold. Excessive irregularities in bending will be cause for rejection.

D. Do not splice bars without written approval of the Engineer. Approved bar bending schedules or placing drawings constitute written approval. Splice and development length of bars shall conform to ACI 318, Chapters 7 and 12, and as shown on Drawings. Stagger splices or locate at points of low tensile stress.

3.03 EMBEDDED ITEMS

A. Install conduit and piping as shown on Drawings. Accurately locate and securely fasten conduit, piping, and other embedded items in forms.

B. Install waterstops as specified in other sections and according to manufacturer's instructions. Securely position waterstops at joints as indicated on Drawings. Protect waterstops from damage or displacement during concrete placing operations.

3.04 BATCHING, MIXING AND DELIVERY OF CONCRETE

A. Measure, batch, mix, and deliver ready-mixed concrete in accordance with ASTM C 94, Sections 8 through 11. Produce ready-mixed concrete using an automatic batching system as described in NRMCA Concrete Plant Standards, Part 2 - Plant Control Systems.

B. Measure, mix and deliver concrete produced by volumetric batching and continuous mixing in accordance with ASTM C 685, Sections 6 through 8.

C. Maintain concrete workability without segregation of material and excessive bleeding. Obtain approval of the Engineer before adjustment and change of mix proportions.

D. Ready-mixed concrete delivered to the site shall be accompanied by batch tickets providing the information required by ASTM C 94, Section 16. Concrete produced by continuous mixing shall be accompanied by batch tickets providing the information required by ASTM C 685, Section 14.

E. When adverse weather conditions affect quality of concrete, postpone concrete placement. Do not mix concrete when air temperature is at or below 40 degrees F and falling. Concrete may be mixed when temperature is 35 degrees F and rising. Take temperature readings in the shade, away from artificial heat. Protect concrete from temperatures below 32 degrees F until the concrete has cured for a minimum of 3 days at 70 degrees F or 5 days at 50 degrees F.

F. Clean, maintain and operate equipment so that it thoroughly mixes material as required.

G. Hand-mix only when approved by the Engineer.

3.05 PLACING CONCRETE

A. Give sufficient advance notice to the Engineer (at least 24 hours prior to commencement of operations) to permit inspection of forms, reinforcing steel, embedded items and other preparations for placing concrete. Place no concrete prior to the Engineer's approval.

B. Schedule concrete placing to permit completion of finishing operations in daylight hours. However, if necessary to continue after daylight hours, light the site as required. If rainfall occurs after placing operations are started, provide covering to protect the work.

C. Use troughs, pipes and chutes lined with approved metal or synthetic material in placing concrete so that concrete ingredients are not separated. Keep chutes, troughs and pipes clean and free from coatings of hardened concrete. Allow no aluminum material to be in contact with concrete.

D. Limit free fall of concrete to 4 feet. Do not deposit large quantities of concrete at one location so that running or working concrete along forms is required. Do not jar forms after concrete has taken an initial set; do not place any strain on projecting reinforcement or anchor bolts.

E. Use tremies for placing concrete in walls and similar narrow or restricted locations. Use tremies made in sections, or provide in several lengths, so that outlet may be adjusted to proper height during placing operations.

F. Place concrete in continuous horizontal layers approximately 12 inches thick. Place each layer while layer below is still plastic.

G. Compact each layer of concrete with concrete spading implements and mechanical vibrators of approved type and adequate number for the size of placement. When immersion vibrators cannot be used, use form vibrators. Apply vibrators to concrete immediately after depositing. Move the vibrator vertically through the layer of concrete just placed and several inches into plastic layer below. Do not penetrate or disturb layers previously placed which have partially set. Do not use vibrators to aid lateral flow concrete. Closely supervise consolidation to ensure uniform insertion and duration of immersion.

H. Handling and Placing Concrete: Conform to ACI 302.1R, ACI 304R and ACI 309R.

3.06 WATERSTOPS

A. Embed waterstops in concrete across joints as shown. Waterstops shall be continuous for the extent of the joint; make splices necessary to provide such continuity in accordance with manufacturer's instructions. Support and protect waterstops during construction operations; repair or replace waterstops damaged during construction.

B. Install waterstops in concrete on one side of joints, leaving other side exposed until the next pour. When a waterstop will remain exposed for 2 days or more, shade and protect the exposed waterstop from direct rays of the sun during the entire exposure and until the exposed portion of the waterstop is embedded in concrete.

C. Splicing PVC Waterstops:

1. Splice waterstops by heat-sealing adjacent waterstop sections in accordance with the manufacturer's printed instructions.

2. Butt end-to-end joints of two identical waterstop sections may be made in the forms during placement of waterstop material.

3. Prior to placement in formwork, prefabricate waterstop joints involving more than two ends to be joined together, an angle cut, an alignment change, or the joining of two dissimilar waterstop sections, allowing not less than 24-inch long strips of waterstop material beyond the joint. Upon inspection and approval by the Engineer, install prefabricated waterstop joint assemblies in formwork, and butt-weld ends of the 24-inch strips to the straight-run portions of waterstop in the forms.

D. Setting PVC Waterstops:

1. Correctly position waterstops during installation. Support and anchor waterstops during progress of the work to ensure proper embedment in concrete and to prevent folding over of the waterstop by concrete placement. Locate symmetrical halves of waterstops equally between concrete pours at joints, with center axis coincident with joint openings. Thoroughly work concrete in joint vicinity for maximum density and imperviousness.

2. Where a waterstop in a vertical wall joint does not connect with any other waterstop, and is not intended to be connected to a waterstop in a future concrete placement, terminate the waterstop 6 inches below the top of the wall.

E. Replacement of Defective Field Joints: Replace waterstop field joints showing evidence of misalignment, offset, porosity, cracks, bubbles, inadequate bond or other defects with products and joints complying to the Specifications.

F. Resilient Waterstop:

1. Install resilient waterstop in accordance with manufacturer's instructions and recommendations.

2. When requested by the Engineer, provide technical assistance by manufacturer's representative in the field at no additional cost to the Owner.

3. Use resilient waterstop only where complete confinement by concrete is provided; do not use in expansion or contraction joints.

4. Where resilient waterstop is used in combination with PVC waterstop, lap resilient waterstop over PVC waterstop a minimum of 6 inches and place in contact with the PVC waterstop. Where crossing PVC at right angles, melt PVC ribs to form a smooth joining surface.

5. At the free top of walls without connecting slabs, stop the resilient waterstop and grooves (where used) 6 inches from the top in vertical wall joints.

6. Bentonite Waterstop:

   a. Locate bentonite waterstop as near as possible to the center of the joint and extend continuous around the entire joint. Minimum distance from edge of waterstop to face of member: 5 inches.

   b. Where thickness of concrete member to be placed on bentonite waterstop is less than 12 inches, place waterstop in grooves at least 3/4 inch deep and 1-1/4 inches wide formed or ground into concrete. Minimum distance from edge of waterstop placed in groove to face of member: 2.5 inches.

c. Do not place bentonite waterstop when waterstop material temperature is below 40 degrees F. Waterstop material may be warmed so that it remains above 40 degrees F during placement but means used to warm it shall in no way harm the material or its properties. Do not install waterstop where air temperature falls outside manufacturer's recommended range.

d. Place bentonite waterstop only on smooth and uniform surfaces; grind concrete smooth if necessary to produce satisfactory substrate, or bond waterstop to irregular surfaces using an epoxy grout which completely fills voids and irregularities beneath the waterstop material. Prior to installation, wire brush the concrete surface to remove laitance and other substances that may interfere with bonding of epoxy.

e. In addition to the adhesive backing provided with the waterstop, secure bentonite waterstop in place with concrete nails and washers at 12-inch maximum spacing.

7. Adhesive Waterstop:

a. With a wire brush thoroughly clean the concrete surface on which the waterstop is to be placed and then coat with primer.

b. If the surface is too rough to allow the waterstop to form a complete contact, grind to form an adequately smooth surface.

c. Install the waterstop with the top protective paper left in place. Overlap joints between strips a minimum of 1 inch and cover back over with protective paper.

d. Do not remove protective paper until just before final formwork completion. Concrete shall be placed immediately. The time that the waterstop material is uncovered prior to concrete placement shall be minimized and shall not exceed 24 hours.

3.07 CONSTRUCTION JOINTS

A. Definitions:

1. Construction joint: Contact surface between plastic (fresh) concrete and concrete that has attained initial set.

2. Monolithic: Manner of concrete placement to reduce or eliminate construction joints; joints other than those indicated on Drawings will not be permitted without written approval of Engineer. Where so approved, make additional construction joints with details equivalent to those indicated for joints in similar locations.

3. Preparation for Construction Joints: Roughen surface of concrete previously placed, leaving some aggregate particles exposed. Remove laitance and loose materials by sandblasting or high-pressure water blasting. Keep surface wet for several hours prior to placing of plastic concrete.

3.08 CURING

A. Comply with ACI 308. Cure by preventing loss of moisture, rapid temperature change and mechanical injury for a period of 7 curing days when Type II or IP cement has been used and for 3 curing days when Type III cement has been used. Start curing as soon as free water has disappeared from the concrete surface after placing and finishing. A curing day is any calendar day in which the temperature is above 50 degrees F for at least 19 hours. Colder days may be counted if air temperature adjacent to concrete is maintained above 50 degrees
F. In continued cold weather, when artificial heat is not provided, removal of forms and shoring may be permitted at the end of calendar days equal to twice the required number of curing days. However, leave soffit forms and shores in place until concrete has reached the specified 28-day strength, unless directed otherwise by the Engineer.

B. Cure formed surfaces not requiring rubbed-finished surface by leaving forms in place for the full curing period. Keep wood forms wet during the curing period. Add water as needed for other types of forms. Or, at Contractor's option, forms may be removed after 2 days and curing compound applied.

C. Rubbed Finish:

1. At formed surfaces requiring rubbed finish, remove forms as soon as practicable without damaging the surface.

2. After rubbed-finish operations are complete, continue curing formed surfaces by using either approved curing/sealing compounds or moist cotton mats until normal curing period is complete.

D. Unformed Surfaces: Cure by membrane curing compound method.

1. After concrete has received a final finish and surplus water sheen has disappeared, immediately seal surface with a uniform coating of approved curing compound, applied at the rate of coverage recommended by manufacturer or as directed by the Engineer. Do not apply less than 1 gallon per 180 square feet of area. Provide satisfactory means to properly control and check rate of application of the compound.

2. Thoroughly agitate the compound during use and apply by means of approved mechanical power pressure sprayers equipped with atomizing nozzles. For application on small miscellaneous items, hand-powered spray equipment may be used. Prevent loss of compound between nozzle and concrete surface during spraying operations.

3. Do not apply compound to a dry surface. If concrete surface has become dry, thoroughly moisten surface immediately prior to application. At locations where coating shows discontinuities, pinholes or other defects, or if rain falls on a newly coated surface before film has dried sufficiently to resist damage, apply an additional coat of compound at the specified rate of coverage.

3.09 REMOVAL OF FORMS AND SHORING

A. Remove forms from surfaces requiring rubbing only as rapidly as rubbing operation progresses. Remove forms from vertical surfaces not requiring rubbed-finish when concrete has aged for the required number of curing days. When curing compound is used, do not remove forms before 2 days after concrete placement.

B. Leave soffit forms and shores in place until concrete has reached the specified 28-day strength, unless directed otherwise by the Engineer.

3.10 DEFECTIVE WORK

A. Immediately repair any defective work discovered after forms have been removed. If concrete surface is bulged, uneven, or shows excess honeycombing or form marks which cannot be repaired satisfactorily through patching, remove and replace the entire section.

3.11 FINISHING

A. Patch honeycomb, minor defects and form tie holes in concrete surfaces with cement mortar mixed one part cement to two parts fine aggregate. Repair defects by cutting out unsatisfactory material and replacing with new concrete, securely keyed and bonded to existing concrete. Finish to make junctures between patches and existing concrete as inconspicuous as possible. Use a stiff mixture and thoroughly tamp into place. After each patch has stiffened sufficiently to allow for greatest portion of shrinkage, strike off mortar flush with the surface.

B. Apply a rubbed finish to exposed surfaces of formed concrete structures as noted on Drawings. After pointing has set sufficiently, wet the surface with a brush and perform first surface rubbing with No. 16 carborundum stone, or approved equal. Rub sufficiently to bring surface to paste, to remove form marks and projections, and to produce a smooth, dense surface. Add cement to form surface paste as necessary. Spread or brush material, which has been ground to paste, uniformly over surface and allow to reset. In preparation for final acceptance, clean surfaces and perform final finish rubbing with No. 30 carborundum stone or approved equal. After rubbing, allow paste on the surface to reset; then wash surface with clean water. Leave structure with a clean, neat and uniform-appearing finish.

C. Apply a wood float finish to concrete slabs.

3.12 FIELD QUALITY CONTROL

A. Testing shall be performed under provisions of Section 014534 - Testing Laboratory Services.

B. Unless otherwise directed by Engineer, the following minimum testing of concrete is required. Testing shall be performed by qualified individuals employed by an approved independent testing agency, and conform to the requirements of ASTM C 1077.

1. Take concrete samples in accordance with ASTM C 172.

2. Make one set of four compression test specimens for each mix design at least once per day and for each 150 cubic yards or fraction thereof. Make, cure and test the specimens in accordance with ASTM C 31 and ASTM C 39.

3. When taking compression test specimens, test each sample for slump according to ASTM C 143, for temperature according to ASTM C 1064, for air content according to ASTM C 231, and for unit weight according to ASTM C 138.

4. Inspect, sample and test concrete in accordance with ASTM C 94, Section 13, 14, and 15, and ACI 311-5R.

C. Test Cores: Conform to ASTM C 42.

D. Testing High Early Strength Concrete: When Type III cement is used in concrete, the specified 7-day and 28-day compressive strengths shall be applicable at 3 and 7 days, respectively.

E. If 7-day or 3-day test strengths (as applicable for type of cement being used) fail to meet established strength requirements, extended curing or resumed curing on those portions of structure represented by test specimens may be required. If additional curing fails to produce the required strength, strengthening or replacement of portions of structure which fail to develop required strength may be required by the Engineer, at no additional cost to the Owner.

3.13 PROTECTION

A. Protect concrete against damage until final acceptance by the Owner.

B. Protect fresh concrete from damage due to rain, hail, sleet, or snow. Provide such protection while the concrete is still plastic, and whenever such precipitation is imminent or occurring.

C. Do not backfill around concrete structures or subject them to design loadings until components of the structure needed to resist the loading are complete and have reached the specified 28-day compressive strength, except as authorized otherwise by the Engineer.

END OF SECTION

PART 1 GENERAL

1.01 SECTION INCLUDES

A. Repairing surface defects.

B. Finishing concrete surfaces including both formed and unformed surfaces.

C. Sealing concrete surfaces.

1.02 UNIT PRICES

A. No separate payment will be made for concrete finishing under this Section. Include payment in unit price for structural concrete.

1.03 REFERENCES

A. ASTM C 144 - Standard Specification for Aggregate for Masonry Mortar.

B. ASTM C 881 - Specification for Epoxy-Resin-Base Bonding Systems for Concrete.

C. ASTM C 1059 - Standard Specification for Latex Agents for Bonding Fresh to Hardened Concrete.

D. ASTM D 4587 - Conducting Tests on Paint and Related Coatings and Materials Using a Fluorescent UV-Condensation Light-and Water-Exposure Apparatus.

E. ASTM E 1155 - Standard Test Method for Determining Floor Flatness and Levelness Using the F Number System.

1.04 SUBMITTALS

A. Conform to Section 013300 - Submittal Procedures

B. Submit manufacturer's technical literature on the following products proposed for use. Include manufacturer's installation and application instructions and, where specified, manufacturer's certification of conformance to requirements and suitability for use in the applications indicated.

1. Floor hardener.

2. Sealer.

3. Epoxy floor topping.

4. Epoxy penetrating sealer.

5. Latex bonding agent.

6. Epoxy adhesive.

7. Abrasive aggregate.

8. Evaporation retardant.

PART 2 PRODUCTS

2.01 MATERIALS

A. Sealer/Dustproofer (VOC Compliant): Water-based acrylic sealer; non-yellowing under ultraviolet light after 200-hour test in accordance with ASTM D 4587. Conform to local, state and federal solvent emission requirements.

B. Epoxy Floor Topping: Two-component epoxy resin meeting ASTM C 881 Type III, resistantto wear, staining and chemical attack, blended with granite, sand, trap rock or quartz aggregate, trowel-applied over concrete floor. Topping thickness, 1/8 inch; color, gray.

C. Abrasive Aggregate for Nonslip Finish: Fused aluminum oxide grit, or crushed emery aggregate containing not less than 40 percent aluminum oxide and not less than 25 percent ferric oxide. Material shall be factory graded, packaged, rustproof and nonglazing, and unaffected by freezing, moisture and cleaning materials.

D. Epoxy Penetrating Sealer: Low-viscosity, two-component epoxy system designed to give maximum penetration into concrete surfaces. Sealer shall completely seal concrete surfaces from penetration of water, oil and chemicals; prevent dusting and deterioration of concrete surfaces caused by heavy traffic; and be capable of adhering to floor surfaces subject to hydrostatic pressure from below. Color, transparent amber or gray; surface, nonslip.

E. Latex Bonding Agent: Non-redispersable latex base liquid conforming to ASTM C 1059. When used in water and wastewater treatment structures, bonding agent shall be suitable for use under continuously submerged conditions. Conformance and suitability certification by manufacturer is required.

F. Bonding Grout: Prepare bonding grout by mixing approximately one part cement to one part fine sand meeting ASTM C 144 but with 100 percent passing No. 30 mesh sieve. Mix with water to consistency of thick cream. At Contractor's option, a commercially-prepared bonding agent used in accordance with manufacturer's recommendations and instructions may be used. When used in water and wastewater treatment structures, bonding agent shall be suitable for use under continuously submerged conditions. Conformance and suitability certification by manufacturer is required. Submit manufacturer's technical information on proposed bonding agent.

G. Patching Mortar:

1. Make patching mortar of same materials and of approximately same proportions as concrete, except omit coarse aggregate. Substitute white Portland cement for part of gray Portland cement on exposed concrete in order to match color of surrounding concrete. Determine color by making trial patch. Use minimum amount of mixing water required for handling and placing. Mix patching mortar in advance and allow to stand. Mix frequently with trowel until it has reached stiffest consistency that will permit placing.Do not add water.

2. Proprietary compounds for adhesion or specially formulated cementitious repair mortars may be used in lieu of or in addition to foregoing patching materials provided that properties of bond and compressive strength meet or exceed the foregoing and color of surrounding concrete can be matched where required. Use such compounds according to manufacturer's recommendations. When used in water and wastewater treatment structures, material shall be suitable for use under continuously submerged conditions. Conformance and suitability certification by manufacturer is required.

H. Epoxy Adhesive: Two-component, 100 percent solids, 100 percent reactive compound developing 100 percent of strength of concrete, suitable for use on dry or damp surfaces. Epoxy used to inject cracks and as a binder in epoxy mortar shall meet ASTM C 881, Type VI. Epoxy used as a bonding agent for fresh concrete shall meet ASTM C 881, Type V.

I. Non-shrink Grout: See Section 036000 – Grouting.

J. Spray-Applied Coating: Acceptable products are Thoro System Products "Thoroseal Plaster Mix" or equal. Color: Gray.

K. Concrete Topping: Class H concrete with 3/8-inch maximum coarse aggregate size, as specified in Section 03310 - Structural Concrete.

L. Concrete Fill: Class H concrete with 3/8-inch maximum coarse aggregate size, (Class C where fill thickness exceeds 3 inches throughout a placement), as specified in Section 03310 - Structural Concrete.

M. Evaporation Retardant: Confilm, manufactured by Master Builders; Eucobar, manufactured by Euclid Chemical Company; or equal.

PART 3 EXECUTION

3.01 AGGREGATE CONCEALMENT

A. Unless indicated otherwise on Drawings or approved by Engineer, all surfaces to be finished shall be free of exposed aggregate.

3.02 REPAIRING SURFACE DEFECTS

A. Defective Areas: Repair immediately after removal of forms. Remove honeycombed and other defective concrete down to sound concrete but in no case to a depth less than one inch. Make edges of cuts perpendicular to concrete surface. Thoroughly work bonding grout into the surface with a brush as that the entire surface is covered. Alternatively, a proprietary bonding agent may be used. Use bonding agent in accordance with manufacturer's instructions. While bonding coat is still tacky, apply premixed patching mortar. Thoroughly consolidate mortar into place and strike off to leave patch slightly higher than surrounding surface. To permit initial shrinkage, leave undisturbed for at least 1 hour before finalfinishing. Keep patched area damp for 7 days. Alternatively, a proprietary cementitious repair mortar may be used and placed in accordance with manufacturer's instructions. Do notuse metal tools in finishing patches in formed walls which will be exposed.

B. Tie Holes: Patch holes immediately after removal of forms. After cleaning and roughening with a wire brush on a rotary drill, thoroughly dampen tie hole and fill solid with patching mortar. Taper tie holes shall have the plug, specified in Section 031000 - Concrete Formwork,driven into the hole to the center of the wall before grouting. Completely fill taper tie holes with patching mortar except that non-shrink grout shall be used for all walls in contact with soil or liquid. On wall faces exposed to view, fill the outer 2 inches of the taper tie hole with patching mortar blended to match adjacent concrete.

C. Cracks: Repair cracks in excess of 0.01 inch by pressure injection of moisture-insensitive epoxy-resin system. Submit proposed material and method of repair for approval prior to making repairs.

D. Structural Repair: When required, make structural repairs after prior approval of Engineer as to method and procedure, using specified epoxy adhesive or approved epoxy mortar.

3.03 FINISHING OF FORMED SURFACES

A. Unfinished Surfaces: Finish is not required on surfaces concealed from view in completed structure by earth, ceilings or similar cover, unless indicated otherwise on Drawings.

B. Rough Form Finish:

1. No form facing material is required on rough form finish surfaces.

2. Patch tie holes and defects. Chip off fins exceeding 1/4 inch in height.

3. Rough form finish may be used on concrete surfaces which will be concealed from view by earth in completed structure, except concealed surfaces required to have smooth form finish, as shown on Drawings.

C. Smooth Form Finish:

1. Form facing shall produce smooth, hard, uniform texture on concrete. Use plywood or fiberboard linings or forms in as large sheets as practicable, and with smooth, even edges and close joints.

2. Patch tie holes and defects. Rub fins and joint marks with wooden blocks to leave smooth, unmarred finished surface.

3. Provide smooth form finish on the wet face of formed surfaces of water-holding structures, and of other formed surfaces not concealed from view by earth in completed structure, except where otherwise indicated on Drawings. Walls that will be exposed after future construction, at locations indicated on Drawings, shall have smooth form finish. Smooth form finish on exterior face of exterior walls shall extend 2 feet below final top of ground elevation. Exterior face of all perimeter grade beams shall have smooth form finish for full depth of grade beam.

D. Rubbed Finish:

1. Use plywood or fiberboard linings or forms in as large sheets as practicable, and with smooth, even edges and close joints.

2. Remove forms as soon as practicable, repair defects, wet surfaces, and rub with No. 16 carborundum stone or similar abrasive. Continue rubbing sufficiently to bring surface paste, remove form marks and fins, and produce smooth, dense surface of uniform color and texture. Do not use cement paste other than that drawn from concrete itself. Spread paste uniformly over surface with brush. Allow paste to reset, then wash surface with clean water.

3. Use rubbed finish at locations indicated on Drawings, except where rubbed finish is indicated for a wall which will be containing a liquid, use spray-applied coating.

E. Spray-applied Coating: At Contractor's option, in lieu of rubbed finish, spray-applied coating may be applied after defects have been repaired and fins removed. Remove form oil, curing compound and other foreign matter that would prevent bonding of coating. Apply coating in uniform texture and color in accordance with coating manufacturer's instructions.

F. Related Unformed Surfaces: Tops of piers, walls, bent caps, and similar unformed surfaces occurring adjacent to formed surfaces shall be struck smooth after concrete is placed. Float unformed surfaces to texture reasonably consistent with that of formed surfaces. Continue final treatment on formed surfaces uniformly across unformed surfaces.

3.04 HOT WEATHER FINISHING

A. When hot weather conditions exist, as defined by Section 03310 - Structural Concrete and as judged by the Engineer, apply evaporation retardant to the surfaces of slabs, topping and concrete fill placements immediately after each step in the finishing process has been completed.

3.05 FINISHING SLABS AND SIMILAR FLAT SURFACES TO CLASS A, B, AND C TOLERANCES

A. Apply Class A, B, and C finishes at locations indicated on Drawings.

B. Shaping to Contour: Use strike-off templates or approved compacting-type screeds riding on screed strips or edge forms to bring concrete surface to proper contour. See Section 031000 - Concrete Formwork for edge forms and screeds.

C. Consolidation and Leveling: Concrete to be consolidated shall be as stiff as practicable Thoroughly consolidate concrete in slabs and use internal vibration in beams and girders of framed slabs and along bulkheads of slabs on grade. Consolidate and level slabs and floors with vibrating bridge screeds, roller pipe screeds or other approved means. After consolidation and leveling, do not permit manipulation of surfaces prior to finishing operations.

D. Tolerances for Finished Surfaces: Check tolerances by placing straightedge of specified length anywhere on slab. Gap between slab and straightedge shall not exceed tolerance listedfor specified class.

Class	Straightedge Length in Feet	Tolerance in Inches
A	10	1/8
B	10	1/4
C	2	1/4

E. Raked Finish: After concrete has been placed, struck off, consolidated and leveled to Class C tolerance, roughen surface before final set. Roughen with stiff brushes or rakes to depth of approximately 1/4 inch. Notify Engineer prior to placing concrete requiring initial raked surface finish so that acceptable raked finish standard may be established for project. Protect raked, base-slab finish from contamination until time of topping. Provide raked finish for following:

1. Surfaces to receive bonded concrete topping or fill.

2. Steep ramps, as noted on Drawings.

3. Additional locations as noted on Drawings.

F. Float Finish:

1. After concrete has been placed, struck off, consolidated and leveled, do not work further until ready for floating. Begin floating when water sheen has disappeared, or when mix has stiffened sufficiently to permit proper operation of power-driven float. Consolidate surface with power-driven floats. Use hand floating with wood or cork-faced floats in locations inaccessible to power-driven machine and on small, isolated slabs.

2. After initial floating, re-check tolerance of surface with 10-foot straightedge applied at not less than two different angles. Cut down high spots and fill low spots to Class B tolerance. Immediately re-float slab to a uniform, smooth, granular texture.

3. Provide float finish at locations not otherwise specified and not otherwise indicated on Drawings.

G. Trowel Finish:

1. Apply float finish as previously specified. After power floating, use power trowel to produce smooth surface which is relatively free of defects but which may still contain some trowel marks. Do additional troweling by hand after surface has hardened sufficiently. Do final troweling when ringing sound is produced as trowel is moved over surface. Thoroughly consolidate surface by hand troweling operations.

2. Produce finished surface free of trowel marks, uniform in texture and appearance and conforming to Class A tolerance. On surfaces intended to support floor coverings, remove defects which might show through covering by grinding.

3. Provide trowel finish for floors which will receive floor covering and additional locations indicated on Drawings.

H. Broom or Belt Finish:

1. Apply float finish as previously specified. Immediately after completing floated finish, draw broom or burlap belt across surface to give coarse transverse scored texture.

2. Provide broom or belt finish at locations indicated on Drawings.

3.06 FINISHING SLABS AND SIMILAR FLAT SURFACES TO "F NUMBER SYSTEM"FINISH

A. Shaping to Contour: Use strike-off templates or approved compacting-type screeds riding on screed strips or edge forms to bring concrete surface to proper contour. Edge forms and screeds: Conform to Section 031000 - Concrete Formwork.

B. Consolidation and Leveling: Concrete to be consolidated shall be as dry as practicable. Thoroughly consolidate concrete in slabs and use internal vibration in beams and girders of framed slabs and along bulkheads of slabs on grade. Consolidate and level slabs and floors with vibrating bridge screeds, roller pipe screeds or other approved means. After consolidation and leveling, do not manipulate surfaces prior to finishing operations.

C. Tolerances for Finished Surfaces: Independent testing laboratory will check floor flatness and levelness.

D. Float Finish:

1. After concrete has been placed, struck off, consolidated and leveled, do not work further until ready for floating. Begin floating when water sheen has disappeared, or when mix has stiffened sufficiently to permit proper operation of power-driven float. Consolidate surface with power-driven floats. Use hand floating with wood or cork-faced floats in locations inaccessible to power-driven machine and on small, isolated slabs.

2. Check tolerance of surface after initial floating with a 10-foot straightedge applied at not less than two different angles. Cut down high spots and fill low spots. Immediately refloat slab to uniform, smooth, granular texture to F_F20/ F_L17 tolerance, unless shown otherwise on Drawings, if applicable.

3. Provide "F Number System" float finish at locations indicated on Drawings.

E. Trowel Finish:

1. Apply float finish as previously specified. After power floating, use power trowel to produce smooth surface which is relatively free of defects but which may still contain some trowel marks. Do additional trowelings by hand after surface has hardened sufficiently. Do final troweling when ringing sound is produced as trowel is moved over surface. Thoroughly consolidate surface by hand troweling operations.

2. Produce finished surface free of trowel marks, uniform in texture and appearance and conforming to an FF25/ FL20 tolerance for slabs on grade and FF25/ FL17 for elevated slabs, unless shown otherwise on Drawings. On surfaces intended to support floor coverings, remove defects, which might show through covering, by grinding.

3. Provide "F Number System" trowel finish at locations indicated on Drawings.

3.07 BONDED CONCRETE TOPPING AND FILL

A. Surface Preparation:

1. Protect raked, base-slab finish from contamination until time of topping. Mechanically remove oil, grease, asphalt, paint, clay stains or other contaminants, leaving clean surface.

2. Prior to placement of topping or fill, thoroughly dampen roughened slab surface and leave free of standing water. Immediately before topping or fill is placed, scrub coat of bonding grout into surface. Do not allow grout to set or dry before topping or fill is placed.

B. Concrete Fill:

1. Where concrete fill intersects a wall surface at an angle steeper than 45 degrees from vertical, provide a 1.5-inch deep keyway in the wall at the point of intersection; size keyway so that no portion of the concrete fill is less than 1.5 inches thick. Form keyway in new walls; create by saw cutting the top and bottom lines and chipping in existing walls.

2. Apply wood float finish to surfaces of concrete fill.

3. Provide concrete fill at locations shown on Drawings.

3.08 EPOXY PENETRATING SEALER

A. Surfaces to receive epoxy penetrating sealer: Apply wood float finish. Clean surface and apply sealer in compliance with manufacturer's instructions.

B. Rooms with concrete curbs or bases: Continue application of floor coating on curb or base to its juncture with masonry wall. Rooms with solid concrete walls or wainscots: Apply minimum 2-inch-high coverage of floor coating on vertical surface.

C. Mask walls, doors, frames and similar surface to prevent floor coating contact.

D. When coving floor coating up vertical concrete walls, curbs, bases or wainscots, use masking tape or other suitable material to keep a neat level edge at top of cove.

E. Provide epoxy penetrating sealer at locations indicated on Drawings.

3.09 EPOXY FLOOR TOPPING

A. Surfaces to receive epoxy floor topping: Apply wood float finish unless recommended otherwise by epoxy floor topping manufacturer. Clean surface and apply epoxy floor toppingin compliance with manufacturer's recommendations and instructions. Thickness of topping: 1/8 inch, If applicable.

B. Rooms with concrete curbs or bases: Continue application of floor coating on curb or base to its juncture with masonry wall. Rooms with solid concrete walls or wainscots: apply 2-inch- high coverage of floor coating on vertical surface.

C. Mask walls, doors, frames and similar surfaces to prevent floor coating contact.

D. When coving floor coating up vertical concrete walls, curbs, bases or wainscots, use masking tape or other suitable material to keep a neat level edge at top of cove.

E. Finished surface shall be free of trowel marks and dimples.

F. Provide epoxy floor topping at locations indicated on Drawings.

3.10 SEALER/DUSTPROOFER

A. Where sealer or sealer/dustproofer is indicated on Drawings, just prior to completion of construction, apply coat of specified clear sealer/dustproofing compound to exposed interior concrete floors in accordance with manufacturer's instructions.

3.11 NONSLIP FINISH

A. Apply float finish as specified. Apply two-thirds of required abrasive aggregate by method that ensures even coverage without segregation and re-float. Apply remainder of abrasive aggregate at right angles to first application, using heavier application of aggregate in areas not sufficiently covered by first application. Re-float after second application of aggregate and complete operations with troweled finish. Perform finishing operations in a manner that will allow the abrasive aggregate to be exposed and not covered with cement paste.

B. Provide nonslip finish at locations indicated on Drawings.

3.12 CURING

A. Conform to requirements of Section 033900 - Concrete Curing.

END OF SECTION

PART 1 GENERAL

1.01 SECTION INCLUDES

A. Curing of structural concrete.

1.02 UNIT PRICES

A. No separate payment will be made for concrete curing under this Section. Include payment in unit price for structural concrete.

1.03 REFERENCES

A. ACI 308 - Standard Practice for Curing Concrete.

B. ASTM C 171 - Standard Specifications for Sheet Materials for Curing Concrete.

C. ASTM C 309 - Standard Specification for Liquid Membrane-Forming Compounds for Curing Concrete.

D. ASTM D 44587 - Conducting Tests on Paint and Related Coatings and Materials Using a Fluorescent UV-Condensation Light-and Water-Exposure Apparatus.

1.04 DEFINITIONS

A. Mass Concrete: Concrete sections 4 feet or more in least dimension.

1.05 SUBMITTALS

A. Conform to Section 013300 - Submittal Procedures.

B. Product Data: Submit description of proposed curing method for concrete. When use of membrane-forming compound is proposed, submit manufacturer's technical information including material specifications, installation instructions and recommendations, and evidence that compound is satisfactory for intended application. State locations where curing compound will be used.

C. When membrane-forming compounds are to be used, submit certification by the manufacturer of compliance with specified requirements and compatibility with toppings, coatings, finishes, and adhesives to be applied.

PART 2 PRODUCTS

2.01 MATERIALS

A. Membrane-forming Curing Compound: Conform to ASTM C 309, Type 1D, and following requirements.

1. Minimum solids content: 30 percent.

2. Compound shall not permanently discolor concrete. When used for liquid- containing structures, curing compound shall be white-pigmented.

3. When used in areas that are to be coated, or that will receive topping or floor covering, material shall not reduce bond of coating, topping, or floor covering to concrete. Curing compound manufacturer's technical information shall state conditions under which compound will not prevent bond.

4. Conform to local, state and federal solvent emission requirements.

B. Clear Curing and Sealing Compound (VOC Compliant): Conform to ASTM C 309, Type 1, Class B, and the following requirements: 30 percent solids content minimum; non-yellowing under ultraviolet light after 500-hour test in accordance with ASTM D 4587. Sodium silicate compounds are not permitted. Conform to local, state and federal solvent emission requirements.

C. Sheet Material for Curing Concrete: ASTM C 171; waterproof paper, polyethylene film or white burlap-polyethylene sheeting.

D. Curing Mats (for use in Curing Method 2): Heavy shag rugs or carpets, or cotton mats quilted at 4 inches on center; 12 ounce per square yard minimum weight when dry.

E. Water for curing: Clean and potable.

PART 3 EXECUTION

3.01 CURING PROCEDURES

A. Comply with ACI 308 and the requirements specified herein. Protect freshly-deposited concrete from premature drying and excessively hot or cold temperatures. Maintain minimal moisture loss and relatively constant temperature during time necessary for hydration of cement and proper hardening of concrete.

B. Unformed Surfaces: For concrete surfaces not in contact with forms, use one of following procedures immediately after completion of placement and finishing.

1. Ponding or continuous sprinkling.

2. Absorptive mat or fabric kept continuously wet.

3. Sand or other covering kept continuously wet.

4. Continuous steam bath (not exceeding 150 degrees F at surface of concrete).

5. Vapor mist bath.

6. Membrane-forming curing compound applied according to manufacturer's recommendations. After the curing compound has dried, wet slab surfaces and cover with waterproof paper, polyethylene film, or white burlap-polyethylene sheeting after the application of the curing compound. Tape sheet seams together and provide sufficient weights to keep the sheeting in place. Wet the slab surface again if the sheeting becomes dislodged, and replace the sheeting.

7. Other moisture-retaining coverings as approved by Engineer.

C. Restrictions on Use of Curing Compounds: Unless curing compound manufacturer certifies that curing compound will not prevent bond to cured surface, do not use curing compound on surfaces that will be rubbed or receive additional concrete, mortar, topping, terrazzo or other cementitious finishing materials, on slabs under resilient floors or built-up roofing, or on surfaces to be waterproofed, sealed, hardened or painted.

D. Curing and Sealing Compounds: At locations indicated, cure exposed interior slabs and troweled slabs receiving mastic-applied adhesives with specified clear curing and sealing compound in accordance with manufacturer's recommendations. Do not store materials directly on curing membranes. Use plywood to protect curing membrane from damage. Immediately repair membranes damaged by foot traffic or other operations.

E. Duration of Curing: Continue curing until cumulative number of days or fractions of days during which ambient temperature is above 50 degrees F has totaled 7. Continue curing of water-retaining structures for a total of 14 days. When high-early-strength concrete has been used, continue curing for total of 3 days. Prevent rapid drying at end of curing period.

F. Formed Surfaces: During the curing period keep wet steel forms heated by sun and wood forms in contact with concrete. When forms are to be removed during curing period, employ curing materials or methods immediately. Continue such curing for remainder of curing period.

G. Temperature:

1. Cold Weather. When mean daily temperature of atmosphere is less than 40 degrees F, maintain temperature of concrete between 50 and 70 degrees F for required curing period. When necessary, make arrangements for heating, covering, insulating or housing concrete work in advance of placement to maintain required temperature and moisture conditions. Prevent damage or injury due to concentration of heat. When combustion heaters are necessary in enclosed or protected area where concrete slabs are being placed,vent heaters.

2. Hot Weather. In advance of placement make arrangements for shading, fog spraying, sprinkling, ponding or installation of windbreaks or wet covering of light color. Take such protective measures as quickly as concrete hardening and finishing operations will allow.

3. Temperature Changes. Control so rate of change in temperature of concrete is as uniform as possible. Do not permit temperature change to exceed 5 degrees F in any one hour or 50 degrees F in any 24-hour period.

H. Protection from Mechanical Injury. During curing period, protect concrete from damaging mechanical disturbances, particularly load stresses, heavy shock, and excessive vibration. Protect finished concrete surfaces from damage caused by construction equipment, materials or methods, and by rain or running water. Do not load self-supporting structures in a way that over stresses concrete.

3.02 CURING MASS CONCRETE

A. Observe the following additional restrictions when curing mass concrete.

1. Minimum curing period: 2 weeks.

2. When ambient air temperature falls below 32 degrees F, protect surface of concrete against freezing.

3. Do not use steam or other curing methods that will add heat to concrete.

4. Keep forms and exposed concrete continuously wet for at least the first 48 hours after placing, and whenever surrounding air temperature is above 90 degrees F during final curing period.

5. During 2-week curing period, provide necessary controls to prevent ambient air temperature immediately adjacent to concrete from falling more than 30 degrees F in 24 hours.

END OF SECTION

PART 1 GENERAL

1.01 SECTION INCLUDES

A. This section covers requirements for grout for leveling column base plates, beams bearing on concrete; pump, motor, and equipment baseplates or bedplates; piping block-outs; machinery; and other uses of grout and at all locations shown or reasonably implied by the Drawings. Unless otherwise specified, all grouting shall be done with non-shrinking grout.

1.02 DELIVERY AND STORAGE

A. Deliver and store all non-shrink grouting materials in undamaged condition with seals and labels intact as packaged by the manufacturer. Prevent damage to or contamination of non-shrink grouting materials during delivery, handling, or storage.

PART 2 PRODUCTS

2.01 MATERIALS

A. Grout shall be non-organic, non-shrink, nonmetallic, nonstaining, and noncorrosive. Gifford-Hill Supreme Grout, Savereisen F-100 Grout, U.S. Grout, Five Star Grout, Master Builders Masterflow 713, or equal.

1. Water shall be clean and free from deleterious substances.

2.02 MIXING

A. Non-shrinking grout shall be factory premixed requiring only the addition of water at the jobsite. The amount of water used shall be as necessary to produce a flowable grout without exceeding the grout manufacturer's recommendation or causing bleeding or segregation of materials.

PART 3 EXECUTION

3.01 PREPARATION

A. Concrete surfaces to receive grout shall be cleaned of all defective concrete, laitance, dirt, oil, grease, and other foreign material by means of bush-hammering, chipping, sandblasting or other similar means, until a sound, clean, lightly roughened surface is achieved. Concrete shall be saturated with water for twenty-four (24) hours prior to grouting. Steel or other surfaces to be in contact with grout shall be entirely free of oil, grease and other foreign substances. Immediately before grouting, wet concrete or other moisture absorbing surfaces thoroughly with clean water, leaving the surface wet but free of excess or standing water.

3.02 FORMWORK

A. Forms for grouting shall be strong, securely anchored, leakproof and provide sufficient clearance between form and space to be grouted to permit proper placement of grout.

3.03 PLACEMENT

A. Grout shall be placed in strict accordance with the directions of the manufacturer so that spaces and cavities are completely filled without voids. Forms shall be provided where structural components cannot confine the grout.

3.04 EDGE FINISHING

A. In locations where the edge of the grout will be exposed to view, finish the edge smooth after grout has attained its initial set.

B. Unless otherwise indicated on the Drawings, the grout shall be sloped at a forty-five (45) degree angle from the bottom of the baseplate, bedplate, member or piece of equipment.

3.05 CURING

A. Grout shall be protected from rapid loss of moisture by keeping it wet and covering it with curing paper or plastic sheet. After edge finishing is completed, the grout shall be wet cured for at least seven (7) Days.

END OF SECTION

SECTION 33 05 37.01

CENTRIFUGALLY CAST FIBERGLASS REINFORCED POLYMER MORTAR PIPE (CCFRPM) FOR DIRECT BURY

PART 1 GENERAL

1.1 SUMMARY

A. Centrifugally Cast Fiberglass Reinforced Polymer Mortar Pipe (CCFRPM).

1.2 REFERENCES

A. ASTM D3262 – Standard Specification for "Fiberglass" (Glass-Fiber-Reinforced Thermosetting-Resin) Sewer Pipe.

B. ASTM D4161 – Standard Specification for "Fiberglass" (Glass-Fiber-Reinforced Thermosetting-Resin) Pipe Joints Using Flexible Elastomeric Seals.

C. ASTM D2412 – Standard Test Method for Determination of External Loading Characteristics of Plastic Pipe by Parallel-Plate Loading.

D. ASTM D3681 – Standard Test Method for Chemical Resistance of "Fiber glass" Pipe in a Deflected Condition.

E. ASTM D638 – Test Method for Tensile Properties of Plastics.

F. Texas Commission of Environmental Quality (TCEQ) Chapter 217 Design Criteria for Domestic Wastewater Systems

G. American Water Works Association (AWWA)

H. AWWA M45 Fiberglass Pipe Design

1.3 UNIT PRICE - MEASUREMENT AND PAYMENT

A. Pipe and Fittings:
   1. Basis of Measurement: By the linear foot. Trench depths shall be paid as follows: (all depths).
   2. Basis of Payment: Includes materials, labor, tools, equipment, excavation, bedding, embedment, backfill, pipe, fittings and accommodations for localized loadings, to indicated depth, connection to existing sewer and new manholes, all testing and for all other incidentals necessary to complete the pipe installation as indicated.

1.4 SUBMITTALS

A. Product Data: Certified Test Reports from the manufacturer's testing facility of centrifugally cast fiberglass reinforced polymer mortar pipe certifying that pipe has been tested in

accordance with and exceeds the minimum requirements of ASTM D3262, ASTM D2412, and ASTM D3681

B. Shop Drawings:
Must Show:
1. Critical dimensions (Wall thickness, Pipe length, class, diameter), joint details and connections, fasteners, gaskets details, anchors, and specials.
2. Materials of construction.

C. Manufacturer's instructions for handling, transporting, loading, storage, and installation of pipe.
1. Instructions shall include trench preparation, pipe layout, and/or other methods for accommodating localized loadings where differential settlement can be expected (i.e., connections to rigid structures, change in foundation soil stiffness, inactive fault zones, etc.).
2. Contractor and pipe manufacturer shall review the technical data and be prepared to accommodate localized loadings in such a manner that delays in the prosecution of the work will be prevented.

1.5 DELIVERY, STORAGE, AND HANDLING

A. Pipe delivery, storage, and handling shall be in accordance with manufacturer's recommendations.

B. The Owner or other designated representative shall be entitled to inspect pipes or witness the pipe manufacturing. Material found to be defective due to manufacture or damage in shipment shall be rejected and removed from the job site.

C. Manufacturer's Notification to Customer: Should the Owner request to see specific pipes during any phase of the manufacturing process, the manufacturer must provide the Owner with adequate advance notice of when and where the production of those pipes will take place.

PART 2 PRODUCTS

2.1 MATERIALS

A. Resin System: The manufacturer shall use only polyester resin systems with a proven history of performance in wastewater systems. The historical data shall have been acquired from a composite material of similar construction and composition as the proposed product. Internal resin shall be resistant to exposure to sulfuric acid as produced by biological activity from hydrogen sulfide gases.

B. Glass Reinforcements: The reinforcing glass fibers used to manufacture the components shall be of highest quality commercial grade E-glass filaments with binder and sizing compatible with impregnating resins.

C. Silica Sand: Sand shall be a minimum 98% silica with a maximum moisture content of 0.2%.

D. Additives: Resin additives, such as curing agents, pigments, dyes, fillers, thixotropic agents, etc., when used, shall not detrimentally effect the performance of the product.

E. Elastomeric Gaskets: Gaskets shall meet ASTM F477 and be supplied by qualified gasket manufacturers and be suitable for the service intended.

2.2 MANUFACTURE AND CONSTRUCTION

A. Pipes: Manufacture pipe by the centrifugal casting process to result in a dense, nonporous, corrosion-resistant, consistent composite structure. The interior surface of the pipes exposed to sewer flow shall provide crack resistance and abrasion resistance. The exterior surface of the pipes shall be comprised of a sand and resin layer which provides UV protection to the exterior.

B. Joints: Unless otherwise specified, the pipe shall be field connected with fiberglass sleeve couplings that utilize elastomeric sealing gaskets as the sole means to maintain joint watertightness. The joints must meet the performance requirements of ASTM D4161. Joints at tie-ins, when needed, may utilize gasket-sealed closure couplings.

C. Fittings: Flanges, elbows, reducers, tees, wyes, laterals and other fittings shall be capable of withstanding all operating conditions when installed. They may be contact molded or manufactured from mitered sections of pipe joined by glass-fiber-reinforced overlays.

D. Markings: Each length of pipe shall be marked in at least one location using large, easily legible, permanent letters indicating the manufacturer name, manufacturer number (identifies factory, location, date manufactured, shift and sequence), nominal diameter, laying lengths, pipe stiffness, ASTM Designation.

E. Acceptable Manufacturer: HOBAS Pipe USA.

2.3 DIMENSIONS

A. Diameters: The actual outside and inside diameter of the pipes shall be in accordance with ASTM D3262 and per manufacturer's literature.

B. Lengths: Pipe shall be supplied in nominal lengths of 20 feet. Actual laying length shall be nominal +1, -4 inches.

C. Special Pipe Sections: Special pipe sections, less than nominal length of 20 feet, may only be installed where it is necessary to complete the pipe installation.

D. Wall Thickness: The minimum wall thickness shall be the stated design thickness.

E. Pressure Class: Shall not be less than PN-25

F. Stiffness Class: The stiffness class of the pipe shall meet all project requirements including the ability to withstand all external loads, construction loads and not be less than SN 72.

G. End Squareness: Pipe ends shall be square to the pipe axis with a maximum tolerance of 1/8".

H. Roundness: The pipe shall be round within 0.1% of the outside diameter.

2.4 TESTING

A. Pipes: Pipes shall be manufactured and tested in accordance with ASTM D3262.

B. Joints: Coupling joints shall meet the requirements of ASTM D4161.

C. Stiffness: Minimum pipe stiffness when tested in accordance with ASTM D2412 shall be 72 psi.

PART 3 EXECUTION

3.1 INSTALLATION

A. Burial: The bedding and burial of pipe and fittings shall be in accordance with the project drawings and specifications and the manufacturer's requirements.

B. Pipe Handling: Use textile slings, other suitable materials or a forklift. Use of chains or cables is not recommended.

C. Jointing:
1. Clean ends of pipe and coupling components.
2. Apply joint lubricant to pipe ends and elastomeric seals of coupling. Use only lubricants approved by the pipe manufacturer.
3. Use suitable equipment and end protection to push or pull the pipes together.
4. Do not exceed forces recommended by the manufacturer for coupling pipe.
5. Join pipes in straight alignment. Pipe deflection is not permitted.

D. Verify trench excavation is ready to receive work and excavations, dimensions, and elevations are as indicated on drawings.

3.2 PREPARATION

A. Correct over excavation with coarse aggregate.

B. Remove large stones or other hard matter capable of damaging pipe or impeding consistent backfilling or compaction.

C. Protect and support existing sewer lines, utilities and appurtenances.

D. Maintain profiles of utilities. Coordinate with other utilities to eliminate interference. Notify Engineer where crossing conflicts occur.

3.3 BEDDING

A. Excavate pipe trench in accordance with Drawings.

B. Excavate to lines and grades shown on Drawings.

C. Dewater excavations to maintain dry conditions and preserve final grades at bottom of excavation.

D. Provide sheeting and shoring in accordance with Contractor's Trench Safety Plan.

E. Bedding shall be required to bring the trench bottom up to grade and shall be the same material as the embedment. The bedding shall be contoured at each belled joint to permit proper joint assembly while maintaining uniform pipe support.

F. Place bedding to a compacted depth as indicated on the Drawings and/or per manufacturer's instructions to accommodate localized loadings where differential settlement can be expected.

G. Maintain optimum moisture content of bedding material to attain the required compaction density as shown on the Drawings and in accordance with the manufacturer's requirements.

3.4 INSTALLATION - PIPE

A. Lay pipe to slope gradients noted on Drawings.

B. Assemble and handle pipe in accordance with manufacturer's instructions.

C. Keep pipe and fittings clean until work is completed and accepted. Cap open ends during periods of work stoppage.

D. Lay bell and spigot pipe with bells upstream.

E. Connect pipe to existing sewer system at existing manhole as indicated on Drawings.

3.5 EMBEDMENT

A. Place embedment by methods that will not disturb or damage the pipe.

B. Work in and compact the haunching material in the area between the bedding and the underside of the pipe before placing and compacting the remainder of the pipe zone embedment.

C. Place embedment around sides and above the top of pipe in accordance with the Drawings.

D. Maintain optimum moisture content of embedment material to attain required compaction density.

3.6 BACKFILL

A. Place backfill above embedment material in accordance with the Drawings and Section G4 – Pipe Excavation, Trenching, Embedment, Encasement and Backfilling.

3.7 FIELD QUALITY CONTROL

A. Request inspection prior to and immediately after placing embedment.

B. Compaction Testing for Bedding, Embedment, and Backfill: In accordance with the Section G4 – Pipe Excavation, Trenching, Embedment, Encasement and Backfilling.

C. When tests indicate Work does not meet specified requirements, remove work, replace and retest.

D. Frequency of Compaction Tests: Per CIP 13 – Summary of Testing (Miscellaneous).

3.8 PROTECTION OF FINISHED WORK

A. Protect pipe and aggregate cover from damage or displacement until backfilling operation is complete.

3.9 SEWER TESTING

A. Examination:
   1. Verify piping is ready for testing and that trenches are backfilled.

B. Piping Preparation:
   1. Lamping:
      a. Lamp gravity piping after flushing and cleaning.
      b. Perform lamping operation by shining light at one end of each pipe section between manholes; observe light at other end; reject pipe not installed with uniform line and grade; remove and reinstall rejected pipe sections; re-clean and lamp until pipe section achieves uniform line and grade.

C. Testing Gravity Sewer Piping:
   1. All field testing shall be in accordance with City of Georgetown Standard Specifications and TCEQ Sewage Collection System General Construction Notes.
   2. Individual Joint Testing: Wastewater collection system pipes with a 27-inch or larger average inside diameter must be air tested at each joint.

END OF SECTION

SECTION 33 05 37.02

CENTRIFUGALLY CAST FIBERGLASS REINFORCED POLYMER MORTAR PIPE (CCFRPM) FOR TUNNEL CARRIER INSTALLATION

PART 1 GENERAL

1.1 SUMMARY

A. Centrifugally Cast Fiberglass Reinforced Polymer Mortar Pipe (CCFRPM) as carrier pipe for a two-pass tunneling installation.

1.2 REFERENCES

A. ASTM D3262 – Standard Specification for “Fiberglass” (Glass-Fiber-Reinforced Thermosetting-Resin) Sewer Pipe.

B. ASTM D4161 – Standard Specification for “Fiberglass” (Glass-Fiber-Reinforced Thermosetting-Resin) Pipe Joints Using Flexible Elastomeric Seals.

C. ASTM D2412 – Standard Test Method for Determination of External Loading Characteristics of Plastic Pipe by Parallel-Plate Loading.

D. ASTM D3681 – Standard Test Method for Chemical Resistance of “Fiber glass” Pipe in a Deflected Condition.

E. ASTM D638 – Test Method for Tensile Properties of Plastics.

F. Texas Commission of Environmental Quality (TCEQ) Chapter 217 Design Criteria for Domestic Wastewater Systems

G. American Water Works Association (AWWA)

H. AWWA M45 Fiberglass Pipe Design

1.3 UNIT PRICE - MEASUREMENT AND PAYMENT

A. Pipe and Fittings:
   1. Basis of Measurement: No separate measurement shall be made for this item.
   2. Basis of Payment: No separate measurement shall be made for this item, but shall be included in the lump sum cost bid for the reach in which this pipe is installed complete in place.

1.4 SUBMITTALS

A. Product Data: Certified Test Reports from the manufacturer’s testing facility of centrifugally cast fiberglass reinforced polymer mortar pipe certifying that pipe has been tested in accordance with and exceeds the minimum requirements of ASTM D3262, ASTM D2412, and ASTM D3681

B. Shop Drawings:
Must Show:
1. Critical dimensions (Wall thickness, Pipe length, class, diameter), joint details and connections, fasteners, gaskets details, anchors, and specials.
2. Materials of construction.

C. Manufacturer's instructions for handling, transporting, loading, storage, and installation of pipe.

1.5 DELIVERY, STORAGE, AND HANDLING

A. Pipe delivery, storage, and handling shall be in accordance with manufacturer's recommendations.

B. The Owner or other designated representative shall be entitled to inspect pipes or witness the pipe manufacturing. Material found to be defective due to manufacture or damage in shipment shall be rejected and removed from the job site.

C. Manufacturer's Notification to Customer: Should the Owner request to see specific pipes during any phase of the manufacturing process, the manufacturer must provide the Owner with adequate advance notice of when and where the production of those pipes will take place.

PART 2 PRODUCTS

2.1 MATERIALS

A. Resin System: The manufacturer shall use only polyester resin systems with a proven history of performance in wastewater systems. The historical data shall have been acquired from a composite material of similar construction and composition as the proposed product. Internal resin shall be resistant to exposure to sulfuric acid as produced by biological activity from hydrogen sulfide gases.

B. Glass Reinforcements: The reinforcing glass fibers used to manufacture the components shall be of highest quality commercial grade E-glass filaments with binder and sizing compatible with impregnating resins.

C. Silica Sand: Sand shall be a minimum 98% silica with a maximum moisture content of 0.2%.

D. Additives: Resin additives, such as curing agents, pigments, dyes, fillers, thixotropic agents, etc., when used, shall not detrimentally effect the performance of the product.

E. Elastomeric Gaskets: Gaskets shall meet ASTM F477 and be supplied by qualified gasket manufacturers and be suitable for the service intended.

2.2 MANUFACTURE AND CONSTRUCTION

A. Pipes: Manufacture pipe by the centrifugal casting process to result in a dense, nonporous, corrosion-resistant, consistent composite structure. The interior surface of the pipes exposed to

sewer flow shall provide crack resistance and abrasion resistance. The exterior surface of the pipes shall be comprised of a sand and resin layer which provides UV protection to the exterior.

B. Joints: Unless otherwise specified, the pipe shall be field connected with fiberglass sleeve couplings or bell-spigot joints that utilize elastomeric sealing gaskets as the sole means to maintain joint watertightness. The joints must meet the performance requirements of ASTM D4161. Joints at tie-ins, when needed, may utilize gasket-sealed closure couplings.

C. Fittings: Flanges, elbows, reducers, tees, wyes, laterals and other fittings shall be capable of withstanding all operating conditions when installed. They may be contact molded or manufactured from mitered sections of pipe joined by glass-fiber-reinforced overlays.

D. Markings: Each length of pipe shall be marked in at least one location using large, easily legible, permanent letters indicating the manufacturer name, manufacturer number (identifies factory, location, date manufactured, shift and sequence), nominal diameter, laying lengths, pipe stiffness, ASTM Designation.

E. Acceptable Manufacturer: HOBAS Pipe USA.

2.3 DIMENSIONS

A. Diameters: The actual outside and inside diameter of the pipes shall be in accordance with ASTM D3262 and per manufacturer's literature.

B. Lengths: Pipe shall be supplied in nominal lengths of 20 feet. Actual laying length shall be nominal +1, -4 inches. When required by pit size, or other limitations, restrict the pipe to shorter lengths, nominal sections of 10 feet or other even divisions of 20 feet shall be used.

C. Wall Thickness: The minimum wall thickness shall be the stated design thickness.

D. Pressure Class: Shall not be less than PN-25

E. Stiffness Class: The stiffness class of the pipe shall meet all project requirements including the ability to withstand all external loads, construction loads and not be less than SN 72.

F. End Squareness: Pipe ends shall be square to the pipe axis with a maximum tolerance of 1/8".

G. Roundness: The pipe shall be round within 0.1% of the outside diameter.

2.4 TESTING

A. Pipes: Pipes shall be manufactured and tested in accordance with ASTM D3262.

B. Joints: Joints shall meet the requirements of ASTM D4161.

C. Stiffness: Minimum pipe stiffness when tested in accordance with ASTM D2412 shall normally be 72 psi.

PART 3 EXECUTION

3.1 INSTALLATION

A. Installation: Pipe and fittings shall be in accordance with the project drawings and specifications and the manufacturer's requirements. See Specification 33 05 24 – Installation of Carrier Pipe in Casing.

B. Pipe Grouting: Annular space grouting shall not damage the pipe and be in accordance with the project drawings and specifications and the manufacturer's requirements. See Specification 33 05 24 – Installation of Carrier Pipe in Casing.

C. Pipe Handling: Use textile slings, other suitable materials or a forklift. Use of chains or cables is not recommended.

D. Jointing:
   1. Clean ends of pipe and coupling components.
   2. Apply joint lubricant to pipe ends or bell interior surfaces and elastomeric seals. Use only lubricants approved by the pipe manufacturer.
   3. Use suitable equipment and end protection to push or pull the pipes together.
   4. Do not exceed forces recommended by the manufacturer for joining or pushing pipe.
   5. Join pipes in straight alignment. Pipe deflection is not permitted.

3.2 FIELD QUALITY CONTROL

A. Field quality control shall be in accordance with Specification Section 33 05 24 – Installation of Carrier Pipe in Casing

3.3 PROTECTION OF FINISHED WORK

A. Protect pipe from damage or displacement until tunneling operation is complete.

3.4 SEWER TESTING

A. Examination:
   1. Verify piping is ready for testing.

B. Piping Preparation:
   1. Lamping:
      a. Lamp gravity piping after flushing and cleaning.
      b. Perform lamping operation by shining light at one end of each pipe section installed in tunnel; observe light at other end; reject pipe not installed with uniform line and grade; remove and reinstall rejected pipe sections; re-clean and lamp until pipe section achieves uniform line and grade.

C. Testing Gravity Sewer Piping:
   1. All field testing shall be in accordance with City of Georgetown Standard Specifications and TCEQ Sewage Collection System General Construction Notes.

2. Individual Joint Testing: Wastewater collection system pipes with a 27-inch or larger average inside diameter must be air tested at each joint.

END OF SECTION

[THIS PAGE INTENTIONALLY LEFT BLANK]

SECTION 33 05 37.03

CENTRIFUGALLY CAST FIBERGLASS REINFORCED POLYMER MORTAR PIPE (CCFRPM) FOR JACKING INSTALLATION

PART 1 GENERAL

1.1 SUMMARY

A. Centrifugally Cast Fiberglass Reinforced Polymer Mortar Pipe (CCFRPM) for jacking installation in single-pass tunneling.

1.2 REFERENCES

A. ASTM D3262 – Standard Specification for "Fiberglass" (Glass-Fiber-Reinforced Thermosetting-Resin) Sewer Pipe.

B. ASTM D4161 – Standard Specification for "Fiberglass" (Glass-Fiber-Reinforced Thermosetting-Resin) Pipe Joints Using Flexible Elastomeric Seals.

C. ASTM D2412 – Standard Test Method for Determination of External Loading Characteristics of Plastic Pipe by Parallel-Plate Loading.

D. ASTM D3681 – Standard Test Method for Chemical Resistance of "Fiber glass" Pipe in a Deflected Condition.

E. ASTM D638 – Test Method for Tensile Properties of Plastics.

F. Texas Commission of Environmental Quality (TCEQ) Chapter 217 Design Criteria for Domestic Wastewater Systems

G. American Water Works Association (AWWA)

H. AWWA M45 Fiberglass Pipe Design

1.3 UNIT PRICE - MEASUREMENT AND PAYMENT

A. Pipe and Fittings:
   1. Basis of Measurement: No separate measurement shall be made for this item.
   2. Basis of Payment: No separate measurement shall be made for this item, but shall be included in the lump sum cost bid for the reach in which this pipe is installed complete in place.

1.4 SUBMITTALS

A. Product Data: Certified Test Reports from the manufacturer's testing facility of centrifugally cast fiberglass reinforced polymer mortar pipe certifying that pipe has been tested in accordance with and exceeds the minimum requirements of ASTM D3262, ASTM D2412, and ASTM D3681

B. Shop Drawings:
Must Show:
1. Critical dimensions (Wall thickness, Pipe length, class, diameter), joint details and connections, fasteners, gaskets details, anchors, and specials.
2. Materials of construction.

C. Manufacturer's instructions for handling, transporting, loading, storage, and installation of pipe.

1.5 DELIVERY, STORAGE, AND HANDLING

A. Pipe delivery, storage, and handling shall be in accordance with manufacturer's recommendations.

B. The Owner or other designated representative shall be entitled to inspect pipes or witness the pipe manufacturing. Material found to be defective due to manufacture or damage in shipment shall be rejected and removed from the job site.

C. Manufacturer's Notification to Customer: Should the Owner request to see specific pipes during any phase of the manufacturing process, the manufacturer must provide the Owner with adequate advance notice of when and where the production of those pipes will take place.

PART 2 PRODUCTS

2.1 MATERIALS

A. Resin System: The manufacturer shall use only polyester resin systems with a proven history of performance in wastewater systems. The historical data shall have been acquired from a composite material of similar construction and composition as the proposed product. Internal resin shall be resistant to exposure to sulfuric acid as produced by biological activity from hydrogen sulfide gases.

B. Glass Reinforcements: The reinforcing glass fibers used to manufacture the components shall be of highest quality commercial grade E-glass filaments with binder and sizing compatible with impregnating resins.

C. Silica Sand: Sand shall be a minimum 98% silica with a maximum moisture content of 0.2%.

D. Additives: Resin additives, such as curing agents, pigments, dyes, fillers, thixotropic agents, etc., when used, shall not detrimentally effect the performance of the product.

E. Elastomeric Gaskets: Gaskets shall meet ASTM F477 and be supplied by qualified gasket manufacturers and be suitable for the service intended.

2.2 MANUFACTURE AND CONSTRUCTION

A. Pipes: Manufacture pipe by the centrifugal casting process to result in a dense, nonporous, corrosion-resistant, consistent composite structure. The interior surface of the pipes exposed to

sewer flow shall provide crack resistance and abrasion resistance. The exterior surface of the pipes shall be comprised of a sand and resin layer which provides UV protection to the exterior.

B. Joints: Unless otherwise specified, the pipe shall be field connected with fiberglass sleeve couplings or bell-spigot joints that utilize elastomeric sealing gaskets as the sole means to maintain joint watertightness. The joints must meet the performance requirements of ASTM D4161. The joints shall have approximately the same O.D. as the pipe, so when the pipes are assembled, the joints are essentially flush with the pipe outside surface. Joints at tie-ins, when needed, may utilize gasket-sealed closure couplings.

C. Fittings: Flanges, elbows, reducers, tees, wyes, laterals and other fittings shall be capable of withstanding all operating conditions when installed. They may be contact molded or manufactured from mitered sections of pipe joined by glass-fiber-reinforced overlays.

D. Markings: Each length of pipe shall be marked in at least one location using large, easily legible, permanent letters indicating the manufacturer name, manufacturer number (identifies factory, location, date manufactured, shift and sequence), nominal diameter, laying lengths, pipe stiffness, ASTM Designation.

E. Acceptable Manufacturer: HOBAS Pipe USA.

2.3 DIMENSIONS

A. Diameters: The actual outside and inside diameter of the pipes shall be in accordance with ASTM D3262 and per manufacturer's literature. For the nominal diameter shown on the plans, the inside diameter of CCFRPM jacking pipe must be equal to or greater than the inside diameter of CCFRPM pipe installed as carrier pipe or direct bury.

B. Lengths: Pipe shall be supplied in nominal lengths of 10 or 20 feet. Actual laying length shall be nominal +1, -4 inches.

C. Wall Thickness: The minimum wall thickness, measured at the bottom of the spigot gasket groove where the wall cross-section has been reduced, is determined from the maximum jacking load. Refer to Section 33 05 22 – Jacking Pipe for design requirements.

D. Stiffness Class: The stiffness class of the pipe shall meet all project requirements including the ability to withstand all external loads, construction loads and not be less than SN 72. Refer to Section 33 05 22 – Jacking Pipe for design requirements.

E. End Squareness: Pipe ends shall be square to the pipe axis with a maximum tolerance of 1/16".

F. Roundness: The pipe shall be round within 0.1% of the outside diameter.

2.4 TESTING

A. Pipes: Pipes shall be manufactured and tested in accordance with ASTM D3262.

B. Joints: Coupling joints shall meet the requirements of ASTM D4161.

C. Stiffness: Minimum pipe stiffness when tested in accordance with ASTM D2412 shall meet the requirements of the designated stiffness class.

PART 3 EXECUTION

3.1 INSTALLATION

A. Installation: Install Jacking Pipe for trenchless installation in accordance with Section 33 30 02 – Trenchless Excavation by Tunnel Boring Machine and Section 33 30 03 – Trenchless Excavation by Microtunnel Boring Machine.

B. Contact Grouting: Contact grouting shall not damage the pipe and be in accordance with the project drawings and specifications and the manufacturer's requirements. See Specification 35 23 24 Contact Grouting.

C. Pipe Handling: Use textile slings, other suitable materials or a forklift. Use of chains or cables is not recommended.

D. Jointing:
   1. Clean ends of pipe and coupling components.
   2. Apply joint lubricant to pipe ends and elastomeric seals of coupling. Use only lubricants approved by the pipe manufacturer.
   3. Use suitable equipment and end protection to push or pull the pipes together.
   4. Do not exceed forces recommended by the manufacturer for joining or pushing pipe.
   5. Join pipes in straight alignment. Pipe deflection is not permitted.

3.2 PROTECTION OF FINISHED WORK

A. Protect pipe from damage or displacement until tunneling operation is complete.

3.3 SEWER TESTING

A. Examination:
   1. Verify piping is ready for testing.

B. Piping Preparation:
   1. Lamping:
      a. Lamp gravity piping after flushing and cleaning.
      b. Perform lamping operation by shining light at one end of each pipe section installed in tunnel and observe light at other end.

C. Testing Gravity Sewer Piping:
   1. All field testing shall be in accordance with City of Georgetown Standard Specifications and TCEQ Sewage Collection System General Construction Notes.
   2. Individual Joint Testing: Wastewater collection system pipes with a 27-inch or larger average inside diameter must be air tested at each joint.

END OF SECTION

[THIS PAGE INTENTIONALLY LEFT BLANK]

SECTION 33 30 02

Trenchless Excavation by Tunnel Boring Machine

PART 1 - GENERAL

1.1 SUMMARY

A. Scope of Work:

1. Furnish all labor, design, materials, and equipment required to perform the trenchless excavation through the geologic conditions interpreted from the Geotechnical Engineering Report (GER) to the minimum dimensions shown on the Drawings and as required to perform the work utilizing a Tunnel Boring Machine (TBM) propelled by jacking pipe. This shall include the excavation, handling, removal, and disposal of all materials encountered in the tunnel excavation; installation of jacking pipe, installation and maintenance of tunnel temporary utilities, drainage, ventilation, lighting, power, and communications; tunnel safety; timely maintenance and repair of TBM equipment; and all appurtenant work necessary to complete the Work in accordance with the Contract Documents.
2. Oversized casing shall be installed as the first pass as part a two-pass system wherein the product pipe will be installed within the oversized casing in the second pass.
3. This is one alternative to perform the trenchless excavation along the sections indicated on the Drawings. The excavations may also be performed utilizing a slurry microtunnel boring machine. The requirements of Section 33 30 03 – Tunnel Excavation by Microtunnel Boring Machine will govern if that method is selected by the Contractor. Dry Berry Creek crossing may be excavated by hand tunneling and the requirements of Section 33 30 03 – Tunnel Excavation by Hand Tunneling will govern if that method is selected by the Contractor.

B. Related Specification Sections include, but are not necessarily limited to:

1. Section CIP 4 – Site Conditions
2. Section CIP 6 – Control of Work
3. Section 33 05 22 – Jacking Pipe
4. Section 33 05 24 – Installation of Carrier Pipe in Casing
5. Section 33 30 03 – Trenchless Excavation by Microtunnel Boring Machine
6. Section 33 30 04 – Trenchless Excavation by Hand Tunneling
7. Section 33 73 15 – Shafts
8. Section 33 73 80 – Groundwater Control for Shafts and Tunnels
9. Section 35 23 24 – Contact Grouting

C. Related documents:

1. (DRAFT) Geotechnical Engineering Report (GER), Dry Berry Creek WW Interceptor, Terracon Project No. 96225148, prepared for Westwood Professional Services, Inc. by Terracon Consultants, Inc.; September 22, 2023.

1.2 PRICE AND PAYMENT PROCEDURES [COORDINATE WITH WESTWOOD].

A. Measurement and Payment
   1. Measurement
      a. No separate measurement shall be made for this Item.
   2. Payment
      a. The work performed and materials furnished in accordance with this Item are subsidiary to the lump sum cost bid for the reach which trenchless excavation by tunnel boring machine is successfully completed, and no other compensation will be allowed.
   3. Refer to Section 012700 – Measurement and Payment for unit price procedures.

1.3 REFERENCES

A. Reference Standards
   1. Reference standards cited in this Specification refer to the current reference standard published at the time of the latest revision date logged at the end of this Specification, unless a date is specifically cited.
   2. Occupational Safety and Health Administration (OSHA)
      a. OSHA Regulations and Standards for Underground Construction, 29 CFR Part 1926, Subpart S, Underground Construction and Subpart P, Excavation.

1.4 DEFINITIONS

A. Tunnel Boring Machine (TBM): A TBM with a full-face motorized rotating cutterhead with enough power and equipped with the appropriate cutting tools to excavate the anticipated geologic materials interpreted from the GER at the planned drive lengths. This may be a traditional manned open-face TBM, auger bore machine, a remote operated machine or small boring unit, or other machine capable of performing the work in accordance with these specifications.

1.5 SUBMITTALS

A. Submittals shall be in accordance with Section 013300 – Submittal Procedures.

B. The Contractor shall submit a list of all equipment to be used and product data demonstrating equipment is sufficient to perform the work.

C. The Contractor shall submit information demonstrating adherence with the qualification requirements outlined in Section 1.6 minimum 30 days prior to the start of work.
   1. Submit project name, date, location, description (diameter and length) of tunnel(s), ground and groundwater conditions, trenchless methods utilized, and names and contact information of references with individual knowledge of the work on each project.

D. Contractor shall submit a TBM excavation work plan 30 days prior to start of work describing the equipment and procedures to be employed. Acceptance by the Engineer of the required designs does not relieve the Contractor of the full responsibility for the adequacy of the designs.
   1. Provide manufacturer's literature describing system in detail including machine type, any design modifications, spoil removal system, jacking system, and method for maintaining line and grade.

2. Provide plan of single pass or two-pass installation and type and size of jacking pipe to be utilized. Coordinate with design and submittal requirements outlined in Section 33 05 22 – Jacking Pipe.
3. Provide a layout of each tunnel work area including shafts/pits, pipe storage, material handling, and jacking arrangement.
4. Include ground water control measures during tunneling in accordance with Section 33 73 80 – Groundwater Control for Shafts and Tunnels.
5. Provide a schedule for all trenchless excavation work identifying each of the trenchless reaches and all major construction activities as independent items.
6. Identify tunnel lighting, communications, and other utility systems.
7. Provide a description of the alignment control and steering systems. Provide manufacturer's literature, drawings showing setup and support provisions, and other details for the laser. Submit a description of surveying methods to set laser positions and a description of procedures to check laser and reset or realign laser during construction. Confirm that these systems can achieve the required pipeline line and grade within the specified tolerances.
8. Submit name and resume of surveyor licensed in the State of Texas who shall be responsible for setting survey control and laser for pipe installation.
9. Identify the capacity, number, and arrangement of jacks. Provide details of thrust ring, jacking controls, and pressure gages. Provide an estimate of maximum jacking force expected to be required to complete each drive, and planned location of intermediate jacking stations (IJS) if used.
10. Provide thrust block and jacking frame design and details. Submit sealed calculations prepared by the Design Engineer demonstrating that the thrust block can transfer the maximum planned forces developed by the main jacks to the ground without excessive movements.
11. Provide details of the IJS and IJS pipe lead and tail pipe design, including manufacturer's literature.
12. Provide details of pipe lubrication injection system and pipe lubricants to be used, including manufacturer's literature.
13. Submit written documentation from the accepted disposal site(s) indicating that they will accept the spoil and are in compliance with all City, County, State, and Federal regulations.
14. Provide a general plan, procedures, and details for constructing recovery shafts and other methods to remove obstructions that may be encountered during tunneling.
15. Provide a safety plan for the tunneling operations including provisions for ventilation, and electrical system safeguards. Submit name of Contractor's site safety representative responsible for implementing safety program.
16. Provide emergency response plan for rescuing personnel trapped underground in a shaft excavation or pipe if personnel will enter the pipe during construction.

E. Contractor shall submit daily shift records including:
1. Starting and ending stations for each shift.
2. Crew size and allocations for each shift.
3. Time of beginning and end of each pipe section installed.
4. Record of soil or rock type and groundwater inflow rates.

5. Records of any unusual occurrences including unstable ground, ground water problems, equipment malfunction, power outages, and damage to jacking pipe. Include the location and time of each such occurrence.

1.6 QUALITY ASSURANCE

A. Qualifications

1. Contractor:
   a. All trenchless boring work shall be performed by an experienced subcontractor or Contractor who has at least 5 years of experience in performing tunneling work and has completed at least 3 boring projects of similar diameter, in similar ground conditions, and utilizing similar trenchless construction methods.
      1) At least 1 of the projects shall have an individual boring of similar diameter and of length equal to or greater in length than the longest drive planned on this project.
   b. The project superintendent shall have at least 5 years of experience supervising boring construction and have experience supervising at least 2 boring projects of similar diameter, in similar ground conditions, and utilizing similar trenchless construction methods.
   c. Design Engineer: Licensed Professional Engineer in the State of Texas with a minimum of ten (10) years of experience in jacking pipe and jacking frame design.
   d. The site safety representative and personnel responsible for air quality monitoring shall be experienced in tunnel construction and shall have current certification by OSHA.
   e. Surveyor: Licensed Surveyor in the State of Texas with experience on similar projects.

PART 2 - PRODUCTS

2.1 MATERIALS

A. Casing or jacking pipe shall be in accordance with Section 33 05 22 – Jacking Pipe.

B. Contact Grout shall be in accordance with Section 35 23 24 – Contact Grouting.

PART 3 - EXECUTION

3.1 PREPARATION

A. Trenchless excavation by TBM shall not begin until the following have been completed:

1. Contractor shall review available utility drawings and location of conduits and underground utilities in all areas where excavation is to be performed. Notify the applicable one-call system prior to any excavation to avoid interference with the existing conduits and utilities in accordance with Section CIP 4 and CIP 6.
2. Contractor shall notify the Texas One Call system (811) to request marking of utilities by utility owners / operators that subscribe to One Call and shall individually notify all other known or suspected utilities to request marking of these utilities.

a. Confirm that all requested locates are made prior to commencing boring operations.
b. Visually confirm and stake necessary existing lines, cables, or other underground facilities including exposing necessary crossing utilities and utilities within 10 feet laterally of the designed tunnel.

3. Follow notification requirements of permit or easement provider where applicable.
4. Complete shaft or pit excavations and support systems for each drive in accordance with Section 33 73 15 – Shafts and approved design submittal.

3.2 DESIGN CRITERIA

A. The trenchless sections will pass through various geologic formations, ground water conditions, and rock of varying quality and strength. Design excavation methods and spoil conveyance system of each section for the ground and groundwater conditions anticipated in that section, as interpreted from the GER.

B. See Section 33 73 80 – Groundwater Control for Shafts and Tunnels for special considerations related to groundwater inflows.

C. The TBM shall have adequate thrust, torque, and cutterhead rotational speed to excavate the geologic material as interpreted from the GER.

D. The Drawings show minimum casing diameters for two-pass installations. Subject to review and acceptance by the Engineer, the Contractor may select such dimensions as may be required to conduct the work, consistent with his planned equipment, means, and methods.

1. Trenchless sections shown with steel encasement must utilize two-pass installation and must utilize steel casing.
2. Trenchless sections shown with unspecified encasement must utilize two-pass installation and may utilize steel or reinforced concrete pipe (RCP) as casing.

E. In a single-pass installation, the inside diameter of the carrier pipe as indicated on the Drawings must be maintained.

F. Use methods and equipment that control surface settlement and heave above the pipeline to prevent damage to existing utilities, facilities, and improvements.

1. Limit any ground movements (settlement/heave) to values that shall not cause damage to adjacent utilities or surface features (i.e. pavement, structures, railroad tracks, etc.)
2. Repair damage to existing utilities or other infrastructure resulting from excavation at no additional cost to the Owner.

G. Maximum radial over cut shall be 1.0 inch (2.0 inches on the diameter).

3.3 INSTALLATION

A. General

1. As necessary to control or minimize the inflow of groundwater into the tunnel, the Contractor shall install, operate, and maintain a tunnel groundwater control system in accordance with Section 33 73 80 – Groundwater Control for Shafts and Tunnels.

2. Properly manage and dispose of groundwater inflows to the shafts or pits in accordance with requirements of Section 33 73 80 – Groundwater Control for Shafts and Tunnels and all permit conditions.
3. The project superintendent shall be on site at all times during trenchless excavation work.
4. Immediately notify the Engineer if any problems are encountered with equipment or materials or if the Contractor believes the conditions encountered are materially and significantly different than those represented by the Contract Documents.
5. Where pipe is required to be installed under railroad embankments or under highways, streets, or other facilities, construction shall be performed in such a manner so as to not interfere with the operation of the railroad, street, highway, or other facility, and so as not to weaken or damage any embankment or structure. Any damage shall be immediately repaired to original or better condition and to the satisfaction of the Engineer or permit grantor at no additional cost to the Owner.
6. During construction operations, furnish and maintain barricades and lights to safeguard traffic and pedestrians until such time as the backfill has been completed and then remove from the site.
7. Furnish all necessary equipment, power, water, and utilities for tunneling, spoil removal and disposal, grouting and other associated work required for the methods of construction.
8. Maintain clean working conditions at all times inside the tunnel and shafts. All muck, slush, grout spills, ponded water, and any other material not required for tunneling shall be removed from the excavations in a timely manner.
9. Whenever there is a condition that is likely to endanger the stability of the excavation or adjacent structures, operate with a full crew, 24 hours a day, including weekends and holidays, without interruption, until those conditions no longer jeopardize the stability of the Work.

B. Shafts and Pits:
   1. Suitable shafts, pits, or trenches shall be excavated for the purpose of conducting the trenchless operations in accordance with Section 33 73 15 – Shafts.
   2. The shafts, pits, or trenches excavated to facilitate these operations shall be backfilled in accordance with Section 33 73 15 – Shafts immediately after the carrier pipe and associated manhole installation has been completed.

C. Jacking System
   1. The main jacking equipment installed shall have a jacking capacity that is at least 150% of the maximum calculated allowable jacking load required to install the pipe and shall be designed by the Design Engineer.
   2. The main jacks shall be mounted in a jacking frame and located in the jacking shaft. The TBM shall be moved forward by the jacks advancing a successive string of connected pipes toward a receiving shaft. The jacking system shall develop a uniform distribution of jacking forces on the end of the pipe by the use of thruster rings and cushioning material.
   3. A thrust block or reaction frame is required to transfer jacking loads to the ground behind the jacking shaft. The thrust block shall be constructed perpendicular to the proposed pipe alignment and shall be designed by the Design Engineer to withstand the maximum jacking pressure to be used, with a safety factor of at least 2.0 without excessive deflection or displacement.

4. Operate the jacks so as not to exceed 80 percent of their rated capacity. At no time shall the jacks be operated so as to exceed the axial capacity of the jacked pipe, including all safety factors, as determined by the Design Engineer per the requirements of Section 33 05 22 – Jacking Pipe. Provide additional jacking capacity, such as intermediate jacking stations, if the jacking requirements shall otherwise exceed 80 percent of their rated capacity.
5. When intermediate jacking stations are utilized, the maximum jacking force shall not exceed the maximum allowable jacking load of the casing as determined by the Design Engineer per the requirements of Section 33 05 22 – Jacking Pipe.
6. The jacking system shall be capable of continuously monitoring the jacking pressure and advance rate.

D. Boring:
1. Install jacking pipe by boring hole with an approved TBM and simultaneously jacking pipe into place.
2. Excavated material may be removed from the tunnel via muck cars, conveyor, auger, or other approved methods. Place excavated material near the top of the working pit and dispose of as required. If no room is available, immediate haul off is required.
3. The use of water or other fluids in connection with the boring operation will be permitted only to the extent required to lubricate cuttings. Jetting or sluicing will not be permitted.
4. The Contractor shall be fully responsible for ensuring the methods used are adequate for the protection of workers, pipe, property, and the public and to provide a finished product as required.

E. Contact Grouting:
1. Contact grout the annulus space between the installed jacking pipe and the ground and any voids caused by or encountered during the boring in accordance with Specification Section 35 23 24 – Contact Grouting.

F. Control of Line and Grade:
1. The benchmarks and other primary survey control have been established and are shown on the Plans. The Contractor shall verify the accuracy of these benchmarks at the beginning of construction and report any errors or discrepancies to the Engineer.
2. When satisfied that all benchmarks are correct, use these benchmarks to furnish and maintain all reference lines-and-grades for microtunneling. For tunneling, use these lines-and-grades to establish the location of the casing using laser guidance system. Surveying shall be performed by a surveyor licensed in the State of Texas. The Contractor shall be fully responsible for the accuracy of the work and the correction of defective work, as required.
3. Laser shall be mounted independently from the thrust block and jacking frame to maintain the alignment of the laser. Stop tunneling operations and reset laser if laser alignment shifts or is moved off of design alignment and grade for any reason. Laser shall only be reset by qualified surveying personnel in accordance with accepted procedures.

4. Monitor line-and-grade continuously during tunneling operations. Record deviation with respect to design line-and-grade at least once per jacking cycle and submit records to the Engineer as requested. Control line-and-grade of the casing to within the specified tolerances.
5. If the jacking pipe installation exceeds the specified tolerances for deviations, return to the theoretical tunneling line and/or grade at a rate of not more than one (1) inch per twenty-five (25) feet. If the tunnel deviates sufficiently off plan line and/or grade to require a redesign of the carrier pipe or appurtenances, the Contractor shall have the system redesigned at no cost to the Owner. All corrective work shall be performed as accepted by the Engineer, at no additional cost to the Owner.

3.4 CLEANUP AND RESTORATION

A. After completion of the boring, all construction debris, spoils, oil, grease, and other materials shall be removed from the pipe, pits, and all work areas.

B. Restoration shall follow construction as the work progresses and shall be completed as soon as reasonably possible.
   1. Restore and repair any damage resulting from surface settlement caused by shaft excavation or boring.
   2. Any property damaged or destroyed shall be restored to a condition equal to or better than existing prior to construction.
   3. Restoration shall be completed no later than 30 days after boring is complete, or earlier if required as part of a permit or easement agreement.
   4. This provision for restoration shall include all property affected by the construction operations.

3.5 SITE QUALITY CONTROL

A. Field Tests and Inspections
   1. Allow access and furnish necessary assistance and cooperation to aid in the observations, measurements, data, and sample collection, including, but not limited to the following:
      a. The Engineer shall have access to the boring system prior to, during, and following all boring operations.
      b. The Engineer shall have access to the trenchless shafts or pits prior to, during, and following all boring operations.
         1) This shall include, but not be limited to, visual inspection of installed pipe and verification of line and grade.
         2) The Contractor shall provide safe access in accordance with all safety regulations.
      c. The Engineer shall have access to spoils removed from the boring excavation prior to, during, and following all boring operations.

3.6 SAFETY

A. The work has been classified as potentially-gassy in accordance with the Code of Federal Regulations, 29 CFR 1926 Safety and Health Regulations for Construction (OSHA).

B. The Contractor is responsible for safety on the Site.

1. Perform all Work in accordance with the current applicable regulations of the Federal, State, and local agencies.
2. In the event of conflict, comply with the more restrictive applicable requirement.

C. No gasoline powered equipment shall be permitted in receiving shafts/pits.
   1. Diesel, electrical, hydraulic, and air powered equipment are acceptable, subject to applicable local, State, and Federal regulations.

D. Furnish and operate a temporary ventilation system in accordance with applicable safety requirements when personnel are underground.
   1. Perform all required air and gas monitoring.
   2. Ventilation system shall provide a sufficient supply of fresh air and maintain an atmosphere free of toxic or flammable gasses in all underground work areas.

E. Perform all work in accordance with all current applicable regulations and safety requirements of the Federal, State, and Local agencies.

F. Comply with all applicable provisions of OSHA 29 CFR Part 1926, Subpart S, Underground Construction and Subpart P, Excavations.
   1. In the event of conflict, comply with the more stringent requirements.

G. If personnel will enter the pipe during construction, the Contractor shall develop an emergency response plan for rescuing personnel trapped underground in a shaft excavation or pipe.
   1. Keep on-site all equipment required for emergency response in accordance with the agency having jurisdiction.

END OF SECTION

[THIS PAGE INTENTIONALLY LEFT BLANK]

SECTION 33 30 03

Trenchless Excavation by Microtunnel Boring Machine

PART 1 - GENERAL

1.1 SUMMARY

A. Scope of Work:

1. Furnish all labor, design, materials, and equipment required to perform the trenchless excavation through the geologic conditions interpreted from the Geotechnical Engineering Report (GER) to the minimum dimensions shown on the Drawings and as required to perform the work utilizing a Microtunnel Boring Machine (MTBM). This shall include the excavation and disposal of all materials encountered in the tunnel excavation; installation of jacking pipe, installation and maintenance of tunnel temporary utilities, drainage, ventilation, lighting, power, and communications; tunnel safety; timely maintenance and repair of MTBM equipment; and all appurtenant work necessary to complete the Work in accordance with the Contract Documents.
2. Oversized casing shall be installed as the first pass as part a two-pass system wherein the product pipe will be installed in the second pass.
3. This is one alternative to perform the trenchless excavation along the sections indicated on the Drawings. The excavation may also be performed utilizing an open-face tunnel boring machine (TBM). The requirements of Section 33 30 02 – Tunnel Excavation by Tunnel Boring Machine will govern if that method is selected by the Contractor. Dry Berry Creek crossing may be excavated by hand tunneling and the requirements of Section 33 30 03 – Tunnel Excavation by Hand Tunneling will govern if that method is selected by the Contractor.

B. Related Specification Sections include, but are not necessarily limited to:

1. Section CIP 4 – Site Conditions
2. Section CIP 6 – Control of Work
3. Section 33 05 22 – Jacking Pipe
4. Section 33 05 24 – Installation of Carrier Pipe in Casing
5. Section 33 30 02 – Trenchless Excavation by Tunnel Boring Machine
6. Section 33 30 04 – Trenchless Excavation by Hand Tunneling
7. Section 33 73 15 – Shafts
8. Section 33 73 80 – Groundwater Control for Shafts and Tunnels
9. Section 35 23 24 – Contact Grouting

C. Related documents:

1. (DRAFT) Geotechnical Engineering Report (GER), Dry Berry Creek WW Interceptor, Terracon Project No. 96225148, prepared for Westwood Professional Services, Inc. by Terracon Consultants, Inc.; September 22, 2023.

1.2 PRICE AND PAYMENT PROCEDURES [COORDINATE WITH WESTWOOD].

A. Measurement and Payment

1. Measurement
   a. No separate measurement will be made for this Item.
2. Payment
   a. The work performed and materials furnished in accordance with this item are subsidiary to the lump sum cost bid for the reach which tunnel excavation by microtunnel boring machine is successfully completed, and no other compensation will be allowed.
3. Refer to Section 012700 – Measurement and Payment for unit price procedures.

1.3 REFERENCES

A. Reference Standards
   1. Reference standards cited in this Specification refer to the current reference standard published at the time of the latest revision date logged at the end of this Specification unless a date is specifically cited.
   2. Occupational Safety and Health Administration (OSHA)
      a. OSHA Regulations and Standards for Underground Construction, 29 CFR Part 1926, Subpart S, Underground Construction and Subpart P, Excavation.

1.4 DEFINITIONS

A. Microtunnel Boring Machine (MTBM): A remotely controlled, steer able, laser- guided microtunnel boring machine consisting of an articulated boring machine shield and a rotating cutting head that uses a slurry to provide continuous pressurized face support during excavation and lubrication of the pipe string.

1.5 SUBMITTALS

A. Submittals shall be in accordance with Section 013300 – Submittal Procedures.

B. The Contractor shall submit a list of all equipment to be used and product data demonstrating equipment is sufficient to perform the work.

C. The Contractor shall submit information demonstrating adherence with the qualification requirements outlined in Section 1.6 minimum 30 days prior to the start of work.
   1. Submit project name, date, location, description (diameter and length) of tunnel(s), ground and groundwater conditions, trenchless methods utilized, and names and contact information of references with individual knowledge of the work on each project.

D. Contractor shall submit an MTBM excavation work plan at least 30 days prior to start of work describing the equipment and procedures to be employed. Acceptance by the Engineer of the required designs does not relieve the Contractor of the full responsibility for the adequacy of the designs.
   1. Provide manufacturer's literature describing system in detail including machine type, any design modifications, spoil removal system, slurry separation system, jacking system, method for maintaining line and grade, and procedures and provisions for injecting pipe lubricants.
   2. Provide plan of single pass or two-pass installation and type and size of jacking pipe to be utilized. Coordinate with design and submittal requirements outlined in Section 33 05 22 – Jacking Pipe.
   3. Provide a layout of each microtunnel work area including shafts/pits, pipe storage, material handling, jacking arrangement, and slurry handling system.

4. Identify ground water control measures during tunneling in accordance with Section 33 73 80 – Groundwater Control for Shafts and Tunnels.
5. Provide a schedule for all trenchless excavation work identifying each of the trenchless reaches and all major construction activities as independent items.
6. Describe tunnel lighting, communications, and other utility systems.
7. Provide a description of the alignment control and steering systems. Provide manufacturer's literature, drawings showing setup and support provisions, and other details for the laser. Submit a description of surveying methods to set laser positions and a description of procedures to check laser and reset or realign laser during construction. Confirm that these systems can achieve the required pipeline line and grade within the specified tolerances.
8. Submit name and resume of surveyor licensed in the State of Texas who shall be responsible for setting survey control and laser for pipe installation.
9. Identify the capacity, number, and arrangement of main jacks. Provide details of thrust ring, jacking controls and pressure gages. Provide an estimate of maximum jacking force expected to be required to complete each drive, and approximate location of intermediate jacking stations (IJS) if used.
10. Provide thrust block and jacking frame design and details. Submit sealed calculations prepared by the Design Engineer demonstrating that the thrust block can transfer the maximum planned forces developed by the main jacks to the ground without excessive movements.
11. Provide details of the IJS system and the IJS pipe lead and tail pipe design, including manufacturer's literature.
12. Provide details of pipe lubrication injection system and pipe lubricants to be used during microtunneling, including manufacturer's literature.
13. Provide spoil and/or slurry handling, separation, transport, and disposal equipment and procedures indicating details of the slurry additives, slurry separation plant, and the location of slurry and spoil disposal sites for microtunneling.
14. Provide a plan to deal with microtunnel slurry accidentally released to the surface.
15. Submit written documentation from the accepted disposal site(s) indicating that they will accept the spoil and are in compliance with all City, County, State, and Federal regulations.
16. Provide a general plan, procedures, and details for constructing recovery shafts and other methods to remove obstructions that may be encountered during microtunneling.
17. Provide a safety plan for the microtunneling operations including provisions for ventilation, and electrical system safeguards. Submit name of Contractor's site safety representative responsible for implementing safety program.
18. Provide emergency response plan for rescuing personnel trapped underground in a shaft excavation or pipe if personnel will enter the pipe during construction.

E. Contractor shall submit daily shift records including:
   1. Starting and ending stations for each shift.
   2. Crew size and allocations for each shift.
   3. Time of beginning and end of each pipe section installed.
   4. Record of soil or rock type.

5. A digital copy of records from the control cabin in a format able to be imported to Microsoft Excel, indicating thrust force, cutterhead torque, rate of advance, line and grade deviation, roll, inclination, laser position, steering altitude, slurry face pressure and other pertinent information from the data logger, recorded at 10-minute intervals, or less. The distance wheel shall be operated at all times and the records correlated to the jacked stations.
6. Records of any unusual occurrences including unstable ground, ground water problems, equipment malfunction, power outages, and damage to jacking pipe. Include the location and time of each such occurrence.

1.6 QUALITY ASSURANCE

A. Qualifications
   1. Contractor:
      a. All trenchless microtunnel boring work shall be performed by an experienced subcontractor or Contractor who has at least 5 years of experience in performing microtunneling work and has completed at least 3 microtunnel boring projects of similar diameter and in similar ground conditions.
         1) At least 1 of the projects shall have an individual boring of similar diameter and of length equal to or greater than the longest drive planned on this project.
      b. The project superintendent shall have at least 5 years of experience supervising microtunnel boring construction and have experience supervising at least 2 microtunnel boring projects of similar diameter and in similar ground conditions.
      c. Microtunnel Design Engineer: Licensed Professional Engineer in the State of Texas with a minimum of ten (10) years of experience in the design of casing pipe, jacking frames, thrust blocks, jacking systems, and other related design work for microtunnel applications.
      d. MTBM Operator: Minimum five (5) years of experience in the operation of the equipment planned to be utilized.
      e. Surveyor: Licensed Surveyor in the State of Texas with experience on similar projects.

PART 2 - PRODUCTS

2.1 MATERIALS

A. Casing or jacking pipe shall be in accordance with Section 33 05 22 – Jacking Pipe.

B. Carrier pipe shall be in accordance with Section WW 2 – Polyvinyl Chloride (PVC) Pipe.

C. Contact Grout shall be in accordance with Section 35 23 24 – Contact Grouting

PART 3 - EXECUTION

3.1 PREPARATION

A. Trenchless excavation by MTBM shall not begin until the following have been completed:

1. Contractor shall review available utility drawings and confirm location of conduits and underground utilities in all areas where excavation is to be performed. Notify the applicable one-call system prior to any excavation to avoid interference with the existing conduits and utilities in accordance with Section CIP 4 and CIP 6.
2. Contractor shall notify the Texas One Call system (811) to request marking of utilities by utility owners / operators that subscribe to One Call and shall individually notify all other known or suspected utilities to request marking of these utilities.
   a. Confirm that all requested locates are made prior to commencing boring operations.
   b. Visually confirm and stake necessary existing lines, cables, or other underground facilities including exposing necessary crossing utilities and utilities within 10 feet laterally of the designed tunnel.
3. Follow notification requirements of permit or easement provider where applicable.
4. Complete shaft or pit excavations and support systems for each drive in accordance with Section 33 73 15 – Shafts and approved design submittal.

3.2 DESIGN CRITERIA

A. The trenchless sections will pass through various geologic formations, groundwater conditions, and rock of varying quality and strength. Design excavation methods, spoil conveyance system, and slurry separation system of each section for the ground and groundwater conditions anticipated in that section. The MTBM shall have seals capable of withstanding the hydrostatic head associated with the groundwater conditions.

B. See Section 33 73 80 – Groundwater Control for Shafts and Tunnels for special considerations related to groundwater inflows.

C. Design launching and receiving seals to prevent loss of ground, groundwater, and lubricants at shafts designed by the Microtunnel Design Engineer.

D. The Drawings show minimum casing diameters for two-pass installations. Subject to review and acceptance by the Engineer, the Contractor may select such dimensions as may be required to conduct the work, consistent with his planned equipment, means, and methods.
   1. Trenchless sections shown with steel encasement must utilize two-pass installation and must utilize steel casing.
   2. Trenchless sections shown with unspecified encasement may utilize steel or reinforced concrete pipe (RCP) as casing.

E. Use methods and equipment that control ground movements (settlement and heave) to prevent damage to existing adjacent utilities, facilities, and surface features (i.e. pavement, structures, railroad tracks, etc.).
   1. Repair damage to existing utilities or other infrastructure resulting from the work at no additional cost to the Owner.

F. Maximum radial over cut shall be 1.0 inch (2.0 inch on the diameter).

3.3 INSTALLATION

A. General

1. As necessary to control or minimize the inflow of groundwater into the tunnel, the Contractor shall install, operate, and maintain a tunnel groundwater control system in accordance with Section 33 73 80 – Groundwater Control for Shafts and Tunnels.
2. Properly manage and dispose of groundwater inflows to the shafts or pits in accordance with requirements of Section 33 73 80 – Groundwater Control for Shafts and Tunnels and all permit conditions.
3. The project superintendent shall be on site at all times during trenchless excavation work.
4. Immediately notify the Engineer if any problems are encountered with equipment or materials or if the Contractor believes the conditions encountered are materially and significantly different than those represented by the Contract Documents.
5. Where pipe is required to be installed under railroad embankments or under highways, streets, or other facilities, construction shall be performed in such a manner so as to not interfere with the operation of the railroad, street, highway, or other facility, and so as not to weaken or damage any embankment or structure. Any damage shall be immediately repaired to original or better condition and to the satisfaction of the Engineer or permit grantor at no additional cost to the Owner.
6. During construction operations, furnish and maintain barricades and lights to safeguard traffic and pedestrians until such time as the backfill has been completed, then remove barricades and lights from the site.
7. Furnish all necessary equipment, power, water, and utilities for tunneling, spoil removal and disposal, grouting and other associated work required for the methods of construction.
8. Maintain clean working conditions at all times inside the tunnel and shafts. All muck, slush, grout spills, ponded water, and any other material not required for tunneling shall be removed from the excavations in a timely manner.
9. Whenever there is a condition that is likely to endanger the stability of the excavation or adjacent structures, operate with a full crew, 24 hours a day, including weekends and holidays, without interruption, until those conditions no longer jeopardize the stability of the Work.

B. Microtunnel Boring Machine (MTBM)
1. The MTBM shall be a closed full-face machine designed and built or rebuilt for the ground conditions on this project by a recognized MTBM manufacturer with at least 5 years' experience in the design and manufacture of MTBMs of this type. The manufacturer must still be in the business of designing and manufacturing MTBMs. All of the various components and systems, which make up the MTBM shall be new or reconditioned so that the machine is ready to operate upon installation at the site. It shall have excess capacity to handle the range of geological conditions indicated in GER.
2. The machine shall be capable of fully supporting the face during both excavation and shutdown periods, and shall have the capability of exerting a controllable, measurable, continuous, stabilizing pressure at the face as required to prevent loss of ground. The system shall be capable of adjustments required to balance the soil pressures at the tunnel face to an accuracy of one foot of equivalent hydrostatic pressure. The machine shall utilize a synchronized slurry transportation system with machine advance rate to avoid over excavation or loss of ground.

3. The slurry pressure at the excavation face shall be controlled by use of slurry pumps. The Contractor shall carefully control slurry pressures applied at the tunnel face to prevent loss of ground and to prevent fracturing of the ground and discharge of slurry to the ground surface or into waterways.
4. Provide a slurry separation plant that is appropriate for the spoils generated from the soils and rock being excavated, and compatible with the anticipated excavation rate, effective in removing the spoil from the slurry, and is acceptable in terms of the available construction staging areas. Use settlement tanks, shakers, vibrating screens, hydro-cyclones and centrifuges as required for effective spoil removal.
5. Monitor the composition of the slurry to maintain the slurry density and viscosity limits as accepted in the submittals.
6. Properly transport and dispose of all excavated materials and slurry in accordance with all applicable City, County, State, and Federal regulations.
7. The MTBM shall be configured or equipped to permit access into the slurry chamber to allow changing of cutterhead tooling.
8. The machine shall be remotely operated, laser guided, and monitored continuously by the operator. A display showing the position of the machine in relation to design line-and-grade shall be provided at the operation console to allow the operator to monitor face pressure, roll, inclination, laser position, steering attitude, slurry face pressure, rate of advance, installed length, thrust force and cutterhead torque. The machine shall have a data logger that records all of the above at 10-minute intervals, or less, to a portable digital storage device in a format that can be imported into Microsoft Excel. The Contractor shall download this data, and include it in the daily report in both the form of raw data and plotted graphically to show the machine parameters as the excavation progresses.
9. The machine shall have a laser guidance system with a light sensitive or electronic target appropriate for the drive lengths required and capable of achieving the line-and-grade control requirements for the project.
10. The machine shall have an articulated shield that is steerable in both vertical and horizontal directions to maintain line-and-grade within the specified tolerances. The cutterhead shall have a reversible drive system so that it can rotate and cut in either direction to minimize rotation or roll of the pipe during installation.
11. A pipe lubrication injection system shall be provided to inject pipe lubricants as required to minimize jacking force. The pipe lubrication system pressure shall be continuously monitored, recorded, and controlled to prevent pipe buckling and/or ground heave.
12. The machine shall be capable of installing the selected jacking pipe at the diameters indicated on the Drawings while limiting overcut below the allowable maximum.
13. Overcut shall not exceed 1 inch measured from the outside diameter of the jacking pipe being installed. The annular space created by any overcut shall be filled with a lubricant material that shall reduce the friction drag of the soil on the pipe and eliminate voids around the pipe. At completion of tunneling, the annular space created by any overcut shall be filled with neat cement grout by means of contact grouting per Section 35 23 24 – Contact Grouting.

C. Jacking System

1. The main jacking equipment installed shall have a jacking capacity that is at least 150% of the maximum calculated allowable jacking load required to install the pipe and shall be designed by the Microtunnel Design Engineer.
2. The main jacks shall be mounted in a jacking frame located in the jacking shaft. The MTBM shall be moved forward by the jacks advancing a successive string of connected pipes toward a receiving shaft. The jacking system shall develop a uniform distribution of jacking forces on the end of the pipe by the use of thruster rings and cushioning material.
3. A thrust block or reaction frame is required to transfer jacking loads to the soil behind the jacking shaft. The thrust block shall be constructed perpendicular to the proposed pipe alignment and shall be designed by the Microtunnel Design Engineer to withstand the maximum jacking pressure to be used, with a safety factor of at least 2.0 without excessive deflection or displacement.
4. Operate the jacks so as not to exceed 80 percent of their rated capacity. At no time shall the jacks be operated so as to exceed the axial capacity of the jacked pipe, including all safety factors, as determined by the Design Engineer per the requirements of Section 33 05 22 – Jacking Pipe. Provide additional jacking capacity, such as intermediate jacking stations, if the jacking requirements shall otherwise exceed 80 percent of their rated capacity.
5. When intermediate jacking stations are utilized, the maximum jacking force shall not exceed the maximum allowable jacking load of the casing as determined by the Design Engineer per the requirements of Section 33 05 22 – Jacking Pipe.
6. The jacking system shall be capable of continuously monitoring the jacking pressure and advance rate.

D. Shafts and Pits:
   1. Suitable shafts, pits, or trenches shall be excavated for the purpose of conducting the trenchless operations in accordance with Section 33 73 15 – Shafts.
   2. Provide launching and receiving seals to prevent loss of ground, groundwater, and loss of lubricants at jacking shaft deigned by the Microtunnel Design Engineer.
   3. The shafts, pits, or trenches excavated to facilitate these operations shall be backfilled immediately after the carrier pipe and associated manhole installation has been completed in accordance with Section 33 73 15 – Shafts.

E. Boring:
   1. Install jacking pipe by boring with an approved MTBM and simultaneously jacking pipe into place.
   2. The use of water or other fluids in connection with the boring operation will be permitted only to the extent required to maintain face pressure and to lubricate the pipe string. Jetting or sluicing will not be permitted.
   3. The Contractor shall be fully responsible for ensuring the methods used are adequate for the protection of workers, pipe, property, and the public; and to provide a finished product as required.

F. Contact Grouting:
   1. Contact grout the annulus space between the installed jacking pipe and the ground and any voids caused by or encountered during the boring in accordance with Specification Section 35 23 24 – Contact Grouting.

G. Control of Line and Grade:

1. The benchmarks and other primary survey control have been established and are shown on the Plans. The Contractor shall verify the accuracy of these benchmarks at the beginning of construction and report any errors or discrepancies to the Engineer.
2. When satisfied that all benchmarks are correct, use these benchmarks to furnish and maintain all reference lines-and-grades for microtunneling. For microtunneling, use these lines-and-grades to establish the location of the casing using laser guidance system. Surveying shall be performed by a surveyor licensed in the State of Texas. The Contractor shall be fully responsible for the accuracy of the work and the correction of defective work, as required.
3. Laser shall be mounted independently from the thrust block and jacking frame to maintain the alignment of the laser. Stop microtunneling operations and reset laser if laser alignment shifts or is moved off of design alignment and grade for any reason. Laser shall only be reset by qualified surveying personnel in accordance with accepted procedures.
4. Monitor line-and-grade continuously during microtunneling operations. Record deviation with respect to design line-and-grade at least once per jacking cycle and submit records to the Engineer as requested. Control line-and-grade of the casing to within the specified tolerances.
5. If the jacking pipe installation exceeds the specified tolerances for deviations, return to the theoretical microtunneling line and/or grade at a rate of not more than one (1) inch per twenty-five (25) feet. If the tunnel deviates sufficiently off plan line and/or grade to require a redesign of the carrier pipe or appurtenances, the Contractor shall have the system redesigned at no cost to the Owner. All corrective work shall be performed as accepted by the Engineer, at no additional cost to the Owner.

3.4 CLEANUP AND RESTORATION

A. After completion of the boring, all construction debris, spoils, oil, grease, and other materials shall be removed from the pipe, pits, and all work areas.

B. Restoration shall follow construction as the work progresses and shall be completed as soon as reasonably possible.
   1. Restore and repair any damage resulting from surface settlement or heave caused by shaft excavation or boring.
   2. Any property damaged or destroyed shall be restored to a condition equal to or better than existing prior to construction.
   3. Restoration shall be completed no later than 30 days after boring is complete, or earlier if required as part of a permit or easement agreement.
   4. This provision for restoration shall include all property affected by the construction operations.

3.5 SITE QUALITY CONTROL

A. Field Tests and Inspections
   1. Allow access and furnish necessary assistance and cooperation to aid in the observations, measurements, data, and sample collection, including, but not limited to the following:

a. The Engineer shall have access to the boring system prior to, during, and following all boring operations.
b. The Engineer shall have access to the trenchless shafts or pits prior to, during, and following all boring operations.
    1) This shall include, but not be limited to, visual inspection of installed pipe and verification of line and grade.
    2) The Contractor shall provide safe access in accordance with all safety regulations.
c. The Engineer shall have access to spoils removed from the boring excavation prior to, during, and following all boring operations.

3.6 SAFETY

A. The work has been classified as potentially-gassy in accordance with the Code of Federal Regulations, 29 CFR 1926 Safety and Health Regulations for Construction (OSHA).

B. The Contractor is responsible for safety on the Site.
    1. Perform all Work in accordance with the current applicable regulations of the Federal, State, and local agencies.
    2. In the event of conflict, comply with the more restrictive applicable requirement.

C. No gasoline powered equipment shall be permitted in shafts/pits.
    1. Diesel, electrical, hydraulic, and air powered equipment are acceptable, subject to applicable local, State, and Federal regulations.

D. Furnish and operate a temporary ventilation system in accordance with applicable safety requirements when personnel are underground.
    1. Perform all required air and gas monitoring.
    2. Ventilation system shall provide a sufficient supply of fresh air and maintain an atmosphere free of toxic or flammable gasses in all underground work areas.

E. Perform all work in accordance with all current applicable regulations and safety requirements of the Federal, State, and Local agencies.

F. Comply with all applicable provisions of OSHA 29 CFR Part 1926, Subpart S, Underground Construction and Subpart P, Excavations.
    1. In the event of conflict, comply with the more stringent requirements.

G. If personnel will enter the pipe during construction, the Contractor shall develop an emergency response plan for rescuing personnel trapped underground in a shaft excavation or pipe.
    1. Keep on-site all equipment required for emergency response in accordance with the agency having jurisdiction.

END OF SECTION

[THIS PAGE INTENTIONALLY LEFT BLANK]

SECTION 33 30 04
Trenchless Excavation by Hand Tunneling

PART 1 - GENERAL

1.1 SUMMARY

A. Scope of Work:
   1. Furnish all labor, design, materials, and equipment required to perform the trenchless excavations through the geologic conditions interpreted from the Geotechnical Engineering Report (GER) to the minimum dimensions shown on the Drawings and as required to perform the work utilizing a hand tunneling with a shield propelled by jacking pipe. This shall include the excavation, handling, removal, and disposal of all materials encountered in the tunnel excavation; installation of jacking pipe, installation and maintenance of tunnel temporary utilities, drainage, ventilation, lighting, power, and communications; tunnel safety; and all appurtenant work necessary to complete the Work in accordance with the Contract Documents.
   2. Oversized casing shall be installed as the first pass as part a two-pass system wherein the product pipe will be installed within the oversized casing in the second pass.
   3. This is one alternative to perform the trenchless excavation of Reach 1 indicated on the Drawings. The excavation may also be performed utilizing a tunnel boring machine or slurry microtunnel boring machine. The requirements of Section 33 30 02 – Trenchless Excavation by Tunnel Boring Machine or Section 33 30 03 – Tunnel Excavation by Microtunnel Boring Machine will govern for the method selected by the Contractor.

B. Related Specification Sections include, but are not necessarily limited to:
   1. Section CIP 4 – Site Conditions
   2. Section CIP 6 – Control of Work
   3. Section 33 05 22 – Jacking Pipe
   4. Section 33 05 24 – Installation of Carrier Pipe in Casing
   5. Section 33 30 02 – Trenchless Excavation by Tunnel Boring Machine
   6. Section 33 30 03 – Trenchless Excavation by Microtunnel Boring Machine
   7. Section 33 73 15 – Shafts
   8. Section 33 73 80 – Groundwater Control for Shafts and Tunnels
   9. Section 35 23 24 – Contact Grouting

C. Related documents:
   1. Geotechnical Engineering Report (GER), Dry Berry Creek WW Interceptor, Terracon Project No. 96225148, prepared for Westwood Professional Services, Inc. by Terracon Consultants, Inc.; September 22, 2023.

1.2 PRICE AND PAYMENT PROCEDURES [COORDINATE WITH WESTWOOD].

A. Measurement and Payment

1. Measurement
   a. No separate measurement shall be made for this item.
2. Payment
   a. The work performed and materials furnished in accordance with this item are subsidiary to the lump sum cost bid for the reach which trenchless excavation by hand tunneling is successfully completed, and no other compensation will be allowed.
3. Refer to Section 012700 – Measurement and Payment for unit price procedures.

1.3 REFERENCES

A. Reference Standards
   1. Reference standards cited in this Specification refer to the current reference standard published at the time of the latest revision date logged at the end of this Specification, unless a date is specifically cited.
   2. Occupational Safety and Health Administration (OSHA)
      a. OSHA Regulations and Standards for Underground Construction, 29 CFR Part 1926, Subpart S, Underground Construction and Subpart P, Excavation.

1.4 DEFINITIONS

A. Hand Tunneling Shield: The leading section of jacked steel casing or approved tunneling shield used to support the tunneled ground from which hand tunneling operations can safely excavate the ground and perform the work in accordance with the specifications.

1.5 SUBMITTALS

A. Submittals shall be in accordance with Section 013300 – Submittal Procedures.

B. The Contractor shall submit a list of all equipment to be used and product data demonstrating equipment is sufficient to perform the work.

C. The Contractor shall submit information demonstrating adherence with the qualification requirements outlined in Section 1.6 minimum 30 days prior to the start of work.
   1. Submit project name, date, location, description (diameter and length) of tunnel(s), ground and groundwater conditions, trenchless methods utilized, and names and contact information of references with individual knowledge of the work on each project.

D. Contractor shall submit a hand tunneling excavation work plan 30 days prior to start of work describing the equipment and procedures to be employed. Acceptance by the Engineer of the required designs does not relieve the Contractor of the full responsibility for the adequacy of the designs.
   1. Provide manufacturer's literature describing system in detail including shield type, any design modifications, spoil removal system, jacking system, and method for maintaining line and grade.
   2. Provide plan of two-pass installation and type and size of jacking pipe to be utilized. Coordinate with design and submittal requirements outlined in Section 33 05 22 – Jacking Pipe.
   3. Provide a layout of each tunnel work area including shafts/pits, pipe storage, material handling, and jacking arrangement.

4. Identify ground water control measures during tunneling in accordance with Section 33 73 80 – Groundwater Control for Shafts and Tunnels.
5. Provide a schedule for all trenchless excavation work identifying each of the trenchless reaches and all major construction activities as independent items.
6. Identify tunnel lighting, communications, and other utility systems.
7. Provide a description of the alignment control. Provide manufacturer's literature, drawings showing setup and support provisions, and other details. Confirm that these systems can achieve the required pipeline line and grade within the specified tolerances.
8. Submit name and resume of surveyor licensed in the State of Texas who shall be responsible for setting survey control for pipe installation.
9. Capacity, number, and arrangement of jacks. Provide details of thrust ring, jacking controls, and pressure gages. Provide an estimate of maximum jacking force expected to be required to complete each drive, and planned location of intermediate jacking stations (IJS) if used.
10. Provide thrust block and jacking frame design and details. Submit sealed calculations prepared by the Design Engineer demonstrating that the thrust block can transfer the maximum planned forces developed by the main jacks to the ground without excessive movements.
11. Provide details of the IJS and IJS pipe lead and tail pipe design, including manufacturer's literature.
12. Provide details of pipe lubrication injection system and pipe lubricants to be used, including manufacturer's literature.
13. Submit written documentation from the accepted disposal site(s) indicating that they will accept the spoil and are in compliance with all City, County, State, and Federal regulations.
14. Provide a general plan, procedures, and details for methods to remove obstructions that may be encountered during hand tunneling.
15. Provide a plan to control the face during mining and when not actively mining.
16. Provide a safety plan for the hand tunneling operations including provisions for ventilation, and electrical system safeguards. Submit name of Contractor's site safety representative responsible for implementing safety program.
17. Provide emergency response plan for rescuing personnel trapped underground in a shaft excavation or pipe if personnel will enter the pipe during construction.

E. Contractor shall submit daily shift records including:
1. Starting and ending stations for each shift.
2. Crew size and allocations for each shift.
3. Time of beginning and end of each pipe section installed.
4. Record of soil or rock type and groundwater inflow rates.
5. Records of any unusual occurrences including unstable ground, ground water problems, equipment malfunction, power outages, damage to jacking pipe. Include the location and time of each such occurrence.

1.6 QUALITY ASSURANCE

A. Qualifications

1. Contractor:
   a. All hand tunneling work shall be performed by an experienced subcontractor or Contractor who has at least 5 years of experience in performing hand tunneling work and has completed at least 5 projects of similar diameter, in similar ground conditions, and utilizing similar construction methods.
      1) At least 1 of the projects shall have an individual tunnel of similar diameter and of length equal to or greater in length than the longest hand tunneling drive planned on this project.
   b. The project superintendent shall have at least 5 years of experience supervising hand tunneling construction and have experience supervising at least 2 projects of similar diameter, in similar ground conditions, and utilizing similar trenchless construction methods.
   c. Design Engineer: Licensed Professional Engineer in the State of Texas with a minimum of ten (10) years of experience in jacking pipe and jacking frame design.
   d. The site safety representative and personnel responsible for air quality monitoring shall be experienced in tunnel construction and shall have current certification by OSHA.
   e. Surveyor: Licensed Surveyor in the State of Texas with experience on similar projects.

PART 2 - PRODUCTS

2.1 MATERIALS

A. Casing or jacking pipe shall be in accordance with Section 33 05 22 – Jacking Pipe.

B. Carrier pipe shall be in accordance with Section WW 2 – Polyvinyl Chloride (PVC) Pipe.

C. Contact Grout shall be in accordance with Section 35 23 24 – Contact Grouting

PART 3 - EXECUTION

3.1 PREPARATION

A. Trenchless excavation by hand tunneling shall not begin until the following have been completed:
   1. Contractor shall review available utility drawings and location of conduits and underground utilities in all areas where excavation is to be performed. Notify the applicable one-call system prior to any excavation to avoid interference with the existing conduits and utilities in accordance with Section CIP 4 and CIP 6.
   2. Contractor shall notify the Texas One Call system (811) to request marking of utilities by utility owners / operators that subscribe to One Call and shall individually notify all other known or suspected utilities to request marking of these utilities.
      a. Confirm that all requested locates are made prior to commencing boring operations.
      b. Visually confirm and stake necessary existing lines, cables, or other underground facilities including exposing necessary crossing utilities and utilities within 10 feet laterally of the designed tunnel.

3. Follow notification requirements of permit or easement provider where applicable.
4. Complete shaft or pit excavations and support systems for each drive in accordance with Section 33 73 15 – Shafts and approved design submittal.

3.2 DESIGN CRITERIA

A. The trenchless sections will pass through various geologic formations, ground water conditions, and rock of varying quality and strength. Design excavation methods and spoil conveyance system of each section for the ground and groundwater conditions anticipated in that section, as interpreted from the GER.

B. See Section 33 73 80 – Groundwater Control for Shafts and Tunnels for special considerations related to groundwater inflows.

C. The hand tunneling equipment shall have sufficient cutting power to excavate the geologic material as interpreted from the GER.

D. The Drawings show minimum casing diameters for two-pass installations. Subject to review and acceptance by the Engineer, the Contractor may select such dimensions as may be required to conduct the work, consistent with his planned equipment, means, and methods.

1. Trenchless sections shown with steel encasement must utilize two-pass installation and must utilize steel casing.
2. Trenchless sections shown with unspecified encasement must utilize two-pass installation and may utilize steel or reinforced concrete pipe (RCP) as casing.

E. Use methods and equipment that control surface settlement and heave above the pipeline to prevent damage to existing utilities, facilities, and improvements.

1. Limit any ground movements (settlement/heave) to values that shall not cause damage to adjacent utilities or surface features (i.e. pavement, structures, railroad tracks, etc.)
2. Repair damage to existing utilities or other infrastructure resulting from excavation at no additional cost to the Owner.

F. Use methods and equipment that allow control of the face during mining and when not actively mining.

G. Maximum radial over cut shall be 1 inch (2.0 inch on the diameter).

3.3 INSTALLATION

A. General

1. As necessary to control or minimize the inflow of groundwater into the tunnel, the Contractor shall install, operate, and maintain a tunnel groundwater control system in accordance with Section 33 73 80 – Groundwater Control for Shafts and Tunnels.
2. Properly manage and dispose of groundwater inflows to the shafts or pits in accordance with requirements of Section 33 73 80 – Groundwater Control for Shafts and Tunnels and all permit conditions.
3. The project superintendent shall be on site at all times during trenchless excavation work.

4. Immediately notify the Engineer if any problems are encountered with equipment or materials or if the Contractor believes the conditions encountered are materially and significantly different than those represented by the Contract Documents.
5. Where pipe is required to be installed under railroad embankments or under highways, streets, or other facilities, construction shall be performed in such a manner so as to not interfere with the operation of the railroad, street, highway, or other facility, and so as not to weaken or damage any embankment or structure. Any damage shall be immediately repaired to original or better condition and to the satisfaction of the Engineer or permit grantor at no additional cost to the Owner.
6. During construction operations, furnish and maintain barricades and lights to safeguard traffic and pedestrians until such time as the backfill has been completed and then remove from the site.
7. Furnish all necessary equipment, power, water, and utilities for tunneling, spoil removal and disposal, grouting and other associated work required for the methods of construction.
8. Maintain clean working conditions at all times inside the tunnel and shafts. All muck, slush, grout spills, ponded water, and any other material not required for tunneling shall be removed from the excavations in a timely manner.
9. Whenever there is a condition that is likely to endanger the stability of the excavation or adjacent structures, operate with a full crew, 24 hours a day, including weekends and holidays, without interruption, until those conditions no longer jeopardize the stability of the Work.

B. Shafts and Pits:
   1. Suitable shafts, pits, or trenches shall be excavated for the purpose of conducting the trenchless operations in accordance with Section 33 73 15 – Shafts.
   2. The shafts, pits, or trenches excavated to facilitate these operations shall be backfilled in accordance with Section 33 73 15 – Shafts immediately after the carrier pipe and associated manhole installation has been completed.

C. Jacking System
   1. The main jacking equipment installed shall have a jacking capacity that is at least 150% of the maximum calculated allowable jacking load required to install the pipe and shall be designed by the Design Engineer.
   2. The main jacks shall be mounted in a jacking frame and located in the jacking shaft. The hand tunneling shield shall be moved forward by the jacks advancing a successive string of connected pipes toward a receiving shaft. The jacking system shall develop a uniform distribution of jacking forces on the end of the pipe by the use of thruster rings and cushioning material.
   3. A thrust block or reaction frame is required to transfer jacking loads to the soil behind the jacking shaft. The thrust block shall be constructed perpendicular to the proposed pipe alignment and shall be designed by the Design Engineer to withstand the maximum jacking pressure to be used, with a safety factor of at least 2.0 without excessive deflection or displacement.

4. Operate the jacks so as not to exceed 80 percent of their rated capacity. At no time shall the jacks be operated so as to exceed the axial capacity of the jacked pipe, including all safety factors, as determined by the Design Engineer per the requirements of Section 33 05 22 – Jacking Pipe. Provide additional jacking capacity, such as intermediate jacking stations, if the jacking requirements shall otherwise exceed 80 percent of their rated capacity.
5. When intermediate jacking stations are utilized, the maximum jacking force shall not exceed the maximum allowable jacking load of the casing as determined by the Design Engineer per the requirements of Section 33 05 22 – Jacking Pipe.
6. The jacking system shall be capable of continuously monitoring the jacking pressure and advance rate.

D. Mining:
1. Install jacking pipe by advancing an approved tunneling shield and simultaneously jacking pipe into place.
2. Blasting is not allowed.
3. Excavated material may be removed from the tunnel via muck cars, conveyor, auger, or other approved methods. Place excavated material near the top of the working pit and dispose of as required. If no room is available, immediate haul off is required.
4. The use of water or other fluids in connection with the boring operation will be permitted only to the extent required to lubricate cuttings. Jetting or sluicing will not be permitted.
5. The excavated tunnel face shall not extend more than 2 feet beyond the end of the casing pipe. Decrease this distance as required by the character or stability of the material being excavated.
6. The Contractor shall be fully responsible for ensuring the methods used are adequate for the protection of workers, pipe, property, and the public and to provide a finished product as required.
7. The Contractor shall provide satisfactory support of the excavated face.

E. Contact Grouting:
1. Contact grout the annulus space between the installed jacking pipe and the ground and any voids caused by or encountered during the boring in accordance with Specification Section 35 23 24 – Contact Grouting.

F. Control of Line and Grade:
1. Maximum deviation from line or grade shall be 3 inches at any point along the drive.
2. Provide means to monitor line and grade continuously during boring operations.
3. Verify line and grade every 50-feet by means of survey by a licensed surveyor or other approved method.
4. If the pipe installation does not meet the specified tolerances, correct the installation, including any necessary redesign of the pipeline or structures and acquisition of necessary easements.

3.4 CLEANUP AND RESTORATION

A. After completion of the hand tunneling, all construction debris, spoils, oil, grease, and other materials shall be removed from the pipe, pits, and all work areas.

B. Restoration shall follow construction as the work progresses and shall be completed as soon as reasonably possible.
   1. Restore and repair any damage resulting from surface settlement caused by shaft excavation or boring.
   2. Any property damaged or destroyed shall be restored to a condition equal to or better than existing prior to construction.
   3. Restoration shall be completed no later than 30 days after boring is complete, or earlier if required as part of a permit or easement agreement.
   4. This provision for restoration shall include all property affected by the construction operations.

3.5 SITE QUALITY CONTROL

A. Field Tests and Inspections
   1. Allow access and furnish necessary assistance and cooperation to aid in the observations, measurements, data, and sample collection, including, but not limited to the following:
      a. The Engineer shall have access to the tunneling system prior to, during, and following all tunneling operations.
      b. The Engineer shall have access to the trenchless shafts or pits prior to, during, and following all boring operations.
         1) This shall include, but not be limited to, visual inspection of installed pipe and verification of line and grade.
         2) The Contractor shall provide safe access in accordance with all safety regulations.
      c. The Engineer shall have access to spoils removed from the boring excavation prior to, during, and following all tunneling operations.

3.6 SAFETY

A. The work has been classified as potentially-gassy in accordance with the Code of Federal Regulations, 29 CFR 1926 Safety and Health Regulations for Construction (OSHA).

B. The Contractor is responsible for safety on the Site.
   1. Perform all Work in accordance with the current applicable regulations of the Federal, State, and local agencies.
   2. In the event of conflict, comply with the more restrictive applicable requirement.

C. No gasoline powered equipment shall be permitted in receiving shafts/pits.
   1. Diesel, electrical, hydraulic, and air powered equipment are acceptable, subject to applicable local, State, and Federal regulations.

D. Furnish and operate a temporary ventilation system in accordance with applicable safety requirements when personnel are underground.
   1. Perform all required air and gas monitoring.
   2. Ventilation system shall provide a sufficient supply of fresh air and maintain an atmosphere free of toxic or flammable gasses in all underground work areas.

E. Perform all work in accordance with all current applicable regulations and safety requirements of the Federal, State, and Local agencies.

F. Comply with all applicable provisions of OSHA 29 CFR Part 1926, Subpart S, Underground Construction and Subpart P, Excavations.
   1. In the event of conflict, comply with the more stringent requirements.

G. If personnel will enter the pipe during construction, the Contractor shall develop an emergency response plan for rescuing personnel trapped underground in a shaft excavation or pipe.
   1. Keep on-site all equipment required for emergency response in accordance with the agency having jurisdiction.

END OF SECTION

[THIS PAGE INTENTIONALLY LEFT BLANK]

SECTION 33 73 15
SHAFTS

PART 1 - GENERAL

1.1 SUMMARY

A. Scope of Work:

1. This Section includes all labor, equipment, and materials necessary to construct shafts to the lines, grades, and limits shown on the Drawings, or as approved by the Engineer, through the geologic conditions presented in the Geotechnical Engineering Report (GER).
2. Work shall include, but not be limited to excavation, support of excavation (SOE) system, installation of invert slab, constructing shaft-tunnel connections, placing grout, removal of SOE elements, and backfilling as shown on the Drawings.
3. The Contractor shall have the sole responsibility for the design, construction, maintenance, and backfilling of all shafts.
4. The Contractor shall have the sole responsibility for maintenance and protection of existing utilities, structures, and facilities within the zone impacted by the shaft. The zone of impact shall include the zone of ground movement in the vicinity of this work.
5. The Contractor shall have the sole responsibility for sizing the shaft within the limits specified and shown on the Drawings. The size of the excavations shall be adequate to construct all required permanent structures and to gain access to tunneling operations for all materials, equipment, and personnel.
6. The Contractor shall allow the Engineer and the Owner's representative access to the shafts, and to use the shafts to access tunnel operations.

B. Related Specification Sections include, but are not necessarily limited to:

1. Division 03 – Concrete
2. Section G4 – Pipe Excavation, Trenching Embedment, Encasement, and Backfilling
3. Section CIP 4 – Site Conditions
4. Section CIP 6 – Control of Work
5. Section WW1 – Concrete Manholes
6. Section 33 30 02 – Trenchless Excavation by Tunnel Boring Machine
7. Section 33 30 03 – Trenchless Excavation by Microtunnel Boring Machine
8. Section 33 30 03 – Trenchless Excavation by Hand Tunneling
9. Section 35 23 24 – Contact Grouting
10. Section 33 73 80 – Groundwater Control for Shafts and Tunnel

C. Related documents:

1. (DRAFT) Geotechnical Engineering Report (GER), Dry Berry Creek WW Interceptor, Terracon Project No. 96225148, prepared for Westwood Professional Services, Inc. by Terracon Consultants, Inc.; September 22, 2023.

1.2 PRICE AND PAYMENT PROCEDURES [COORDINATE WITH WESTWOOD].

A. Measurement and Payment
   1. Measurement
      a. No separate measurement will be made for this item.
   2. Payment
      a. The work performed and materials furnished in accordance with this Item are subsidiary to the lump sum cost bid for the reach(es) in which shafts are utilized to complete the work, and no other compensation will be allowed.
   3. Refer to Section 012700 – Measurement and Payment for unit price procedures.

1.3 REFERENCES

A. Standards
   1. ASTM A36 – Standard Specification for Carbon Structural Steel.
   2. ASTM A572 – Standard Specification for High-Strength Low-Alloy Columbium-Vanadium Structural Steel.
   3. ASTM A1011 – Standard Specification for Steel, Sheet and Strip, Hot-Rolled, Carbon, Structural, High-Strength Low-Alloy, High-Strength Low-Alloy with Improved Formability, and Ultra-High Strength.
   4. ASTM A1064 – Standard Specification for Carbon Steel Wire and Welded Wire Reinforcement, Plain and Deformed, for Concrete.

1.4 DEFINITIONS

1. Shaft: Excavation supported by SOE of any shape or dimension as needed to facilitate trenchless construction. This includes a trench or open-cut section where trenchless construction would break into or out of.
2. Support of Excavation (SOE): temporary earth-retaining system to control the soil or rock to facilitate constructing a safe and efficient shaft.
3. Groundwater inflow: Groundwater which enters anywhere within a partially or fully excavated shaft, as cumulatively measured by pumping from dewatering well(s) and flow meters, as individually measured at individual point sources, as measured in total via sump pump discharge flow meters or as measured by other CMI approved measurement methods.
4. Shaft Designer: Responsible for the design of the shafts and associated SOE.
5. Tunnel-to-Shaft Connection Designer: Responsible for design of soft eyes, entry and exit seals, and ground improvement zones to accommodate construction of shafts, tunnel, and associated connections.

1.5 SUBMITTALS

A. General:
   1. Submittals shall be in accordance with Section 013300 – Submittal Procedures.

B. The Contractor shall submit a list of all equipment to be used and product data demonstrating equipment is sufficient to perform the work.

C. The Contractor shall submit information demonstrating adherence with the qualification requirements outlined in Section 1.6 minimum 30 days prior to the start of work.

a. For each position - submit project name, date, location, description (size and depth) ground and groundwater conditions, SOE systems utilized, and names and contact information of references with individual knowledge of the work on each project.

D. Submit the following to the Engineer at least 60 days prior to the start of shaft construction at each shaft site. Acceptance by the Engineer of the shaft and associated SOE designs does not relieve the Contractor of the full responsibility for the adequacy of the design.

1. Shop Drawings:
   a. Shop Drawings for each shaft to be constructed. Shop Drawings shall include but not be limited to: shaft location and dimensions; proposed SOE and details for both soil and rock; flood protection system demonstrating protection to the FEMA 100-year floodplain elevations indicated on the drawings; backfill; and surface restoration.
2. Submit a break-in/break-out plan for each shaft that includes the following:
   a. Location of all SOE elements and clearance distance from each to the outside dimension of the Tunnel Boring Machine (TBM) or Microtunnel Boring Machine (MTBM);
   b. Location and dimensions of ground improvement zones to be used to stabilize the ground and/or control groundwater flow, as needed;
   c. Means and methods to mitigate hazardous gases entering into the shafts, tunnel, TBM, or MTBM;
   d. Means and method to maintain tunnel line and grade;
   e. Means and methods to protect the invert and prevent instability of shaft SOE or tunnel segments.
   f. Means and methods to prevent loss of slurry for MTBM launching and receiving.
3. Calculations:
   a. Submit calculations for all the details of each shaft and associated SOE. Calculations shall be signed and sealed by the Shaft Designer.
   b. Submit calculations for all the details of connections used in each tunnel to shaft transition. Calculations shall be signed and sealed by the Tunnel-to-Shaft Connection Designer.
4. Procedures and Methods:
   a. Submit procedures for excavating shafts, installing SOE, installing product pipe and final structures, and backfilling.
   b. Submit methods for controlling groundwater and removing and disposing of water. See requirements outlined in Section 33 73 80 – Groundwater Control for Shafts and Tunnel.
5. Product Data:
   a. Submit manufacturer’s product data for all materials incorporated into the final shaft structure.

1.6 QUALITY ASSURANCE

A. Qualifications

1. Contractor and Shaft Personnel Qualifications:
   a. Shaft Designer and Tunnel-to-Shaft Connection Designer:
      i. Professional Engineer licensed in the State of Texas, with demonstrated competence in the design of shaft SOE.

ii. Minimum of 10 years of experience and 3 shaft SOE projects of similar scope and complexity.

b. Superintendent:
   i. Minimum of 5 years of experience and 3 projects of similar scope and complexity.
   ii. The superintendent shall be on site full time during the construction of the shafts.

1.7 DELIVERY, STORAGE, AND HANDLING

A. Provide and maintain an adequate supply of SOE materials at the site while shaft excavation is in progress consistent with requirements of the schedule.

1.8 FIELD [SITE] CONDITIONS

A. Refer to the Contract Documents, including the Geotechnical Engineering Report (GER), for anticipated subsurface conditions. Subsurface conditions may require interpretation by the Contractor and the Shaft Designer and Tunnel-to-Shaft Connection Designer.

B. Multiple portions of the project with anticipated shafts are located in the FEMA 100-year flood plain. At a minimum, design the construction methods and groundwater and surface water control methods to allow the shaft, contractor's equipment, and the tunnel to be effectively protected to the elevation of the "1% Annual Chance Flood" (FEMA 100-year flood). The FEMA 100-year floodplain is shown on the Contract Drawings.

PART 2 - PRODUCTS

2.1 MATERIALS

A. Backfill Materials:
   1. Material conforming to Flowable Backfill per Section C9 – Flowable Backfill; or
   2. Material conforming to Select Backfill Material per Section G4 - Pipe Excavation, Trenching, Embedment, Encasement and Backfilling.

B. Concrete: Conform to Division 03 – Concrete.

C. Lean Concrete: Lean concrete shall have a low strength (in the range of 500-1,000 psi) and small aggregate such that it is easily and evenly chipped away for lagging installation.

D. Shotcrete: Shall be designed by the Contractor to safely resist design ground loads with an appropriate safety factor and shall be compatible with the anticipated subsurface conditions.

E. Structural Steel: Steel ribs, fabricated connections and accessories, other steel W shapes, plate steel, and other structural steel shall conform to the requirements of ASTM A572 or ASTM A36, unless otherwise accepted.

F. Lagging:
   1. Lagging between soldier piles or ring beams shall be timber, steel plate, or reinforced concrete.

2. Lagging shall be designed by the Contractor to safely resist design ground loads with an appropriate safety factor. As a minimum, design shall demonstrate adequate resistance to bending forces imposed on the lagging.
3. Liner Plate: Shall meet the requirements of ASTM A1011 manufactured by Dywidag Systems International, Inc., Contech Construction Products, Inc., or approved equal.

G. Rock Bolts: Shall be designed by the Contractor to safely resist design ground loads with an appropriate safety factor and shall be compatible with the anticipated subsurface conditions.

H. Welded Wire Mesh:
1. Welded Wire Mesh shall conform to ASTM A1064.

I. The Shaft Designer and Tunnel-to-Shaft Connection Designer shall be ultimately responsible for determining the specific material requirements for the work.

PART 3 - EXECUTION

3.1 PREPARATION

A. Shaft excavation shall not begin until the following have been completed:
1. Review of available utility drawings and location of conduits and underground utilities in all areas where excavation is to be performed. Notify the applicable one-call system prior to any excavation to avoid interference with the existing conduits and utilities in accordance with Section CIP4 and CIP6.
2. Contractor shall notify the Texas One Call system (800-245-4545) to request marking of utilities by utility owners / operators that subscribe to One Call and shall individually notify all other known or suspected utilities to request marking of these utilities.
   a. Confirm that all requested locates are made prior to commencing boring operations.
   b. Visually confirm and stake necessary existing lines, cables, or other underground facilities including exposing necessary crossing utilities and utilities within 10 feet laterally of the designed tunnel.
3. Follow notification requirements of permit or easement provider where applicable.

3.2 DESIGN

A. Shaft Designer and Tunnel-to-Shaft Connection Designer shall:
1. Design shafts and associated SOE to withstand earth pressures, equipment loads, applicable traffic and construction loads, and other surcharge loads to allow the safe construction of the tunnel without excessive movement or settlement of the ground, and to prevent damage to adjacent structures, streets, and utilities.
2. Where shafts connect to open-cut sections or where open cut sections are utilized as launch or receiving pits, coordinate the design with the requirements of Section G4 – Pipe Excavation, Trenching Embedment, Encasement and Backfilling.
3. Design a shaft flood protection system to protect the shaft (and connected underground works) from flooding in the event a flood causes water levels to reach the FEMA 100-year floodplain elevations indicated on the drawings.

4. Design shaft SOE elements to be compatible with the ground and groundwater conditions interpreted from the GER.
5. Design shaft to consider any uplift forces that may act on the bottom of the shaft and whether ground improvement or other means of water cutoff are required.
6. Design a concrete base slab which is required in the shaft from which the tunnel boring machine or microtunnel boring machine will be launched and operated.

3.3 INSTALLATION

A. General:

1. Construct the shafts to accommodate the installation of the pipe, manholes, TBM or MTBM, and jacking equipment. The Contractor is responsible for the shaft locations and dimensions.
2. Locate existing utilities in the vicinity of the proposed construction sites prior to shaft location layouts and prior to material purchases for shaft construction. Determine if conflicts exist prior to any excavation for the proposed work.
3. Conduct layout work for each shaft to the lines and levels required before installation of facilities.
4. Provide safety railing and barricades at all excavations at all times.
5. Provide, operate, and maintain for the duration of the Work a temporary ventilation system that conforms to specified safety requirements and the requirements of jurisdictional authorities.
6. No gasoline powered equipment shall be permitted in the shafts. Diesel, electrical, hydraulic, and air powered equipment is acceptable, subject to applicable City, County, State, and Federal regulations.

B. Excavation:

1. Excavate soil and rock through conditions interpreted from the GER.
2. Excavations shall be to the dimensions as necessary to accomplish the work but in no case outside of the construction limits as shown on the drawings without specific acceptance by the Engineer. Do not excavate more than six inches deeper than the elevations shown or accepted. Excavations carried more than six inches deeper than the elevations shown or accepted shall be backfilled with accepted compacted material or lean concrete at no cost to the Owner. Methods used in making excavations shall not loosen ground beyond the limits of excavation.
3. The height of unsupported shaft sidewall span shall not exceed three feet in soil and five feet in rock. No unsupported sidewall spans will be allowed to exist for longer than 8 hours.
4. Handle and control groundwater in conformance with Section 33 73 80 – Groundwater Controls for Shafts and Tunnel.
5. Excavated material shall be handled and disposed of in accordance with Section G4 Pipe Excavation, Trenching, Embedment, Encasement and Backfilling.

C. Shaft SOE Installation:

1. Install SOE in accordance with Contractor’s approved design and in accordance and compatible with Section 33 30 02 – Trenchless Excavation by Tunnel Boring Machine and Section 33 30 03 – Trenchless Excavation by Microtunnel Boring Machine as applicable.
2. Ring Beam and Lagging:

a. Applications: Ring beams and lagging may be used as SOE in a circular shaft.
b. Fabrication and Installation: Ring beams shall be pre-rolled to an appropriate curvature to match the intended excavated diameter of the shaft, and may be composed of several component pieces, with properly designed structural connections, to facilitate easy installation. Ring beams shall be expanded against the excavation wall or blocked at a spacing determined by the Contractor's design.
c. Lagging: Provide timber, steel plate, or pre-cast concrete lagging of sufficient strength to withstand lateral earth pressures. Install lagging with no gap between adjacent boards or panels. As installation progresses, backfill the voids between the excavation face and the lagging with grout, sand, or pea gravel packed into place.

3. Rock Bolts:
   a. Applications: Rock bolts may be used as part of an SOE system in rock in conjunction with welded wire mesh and/or shotcrete.
   b. Install in accordance with approved design submittal.
4. Secant Piles
   a. Applications: Secant piles may be used as SOE in soil or rock in conjunction with other SOE elements as needed per the Contractor's approved design.
   b. Install in accordance with approved design submittal.

D. Shaft-to-Tunnel Connection
   1. Perform the connection in a manner that will not damage the tunnel excavation and lining. Provide any supplemental support necessary to prevent damage to the shaft and tunnel lining during break-in and break-out of the tunnel into or out of the shaft.
   2. Supplemental support shall not adversely affect the final structure. Remove supplemental support that would degrade or decay over time that would result in damage to the structure or nearby facilities.
   3. Supplemental support within the tunnel or shaft shall remain in place as long as necessary.
   4. The supplemental support shall be in place and at full strength prior to tunnel break-in or break-out.
   5. Complete the connection of the tunnel to the shaft without discharging excessive slurry fluid or groundwater into the tunnel or shaft to maintain natural groundwater levels, preclude loss of ground, and to protect the local groundwater regime.

3.4 CLEANUP AND RESTORATION

A. Restore work areas to original condition or as shown on the Drawings.

B. Removal:

1. Remove all SOE and flood protection elements within five (5) feet of the ground surface, including (but not limited to) secant piles, slurry walls, soldier piles, wales, struts, lagging, and liner plates. SOE elements greater than five (5) feet below the ground surface shall be removed if practical, or if degradation or decay over time would result in damage to nearby facilities. Removal of the SOE system shall be performed in a manner that will not disturb or harm adjacent construction or facilities and only after shaft backfill has been placed. All voids created by the removal of the SOE elements shall be immediately filled with controlled density fill, lean concrete, or cement grout, as accepted by the Engineer. The SOE elements removed from the excavation shall remain the property of the Contractor and shall be removed from the site.

C. Backfill:

1. Backfill shafts with flowable backfill a minimum of 6 inches above the crown of the tunnel in accordance with Section C9 – Flowable Backfill. Furnish, place and compact remaining backfill in the shafts, pits, and other excavations in accordance with the Drawings, Section C9 – Flowable Backfill, and Section G4 Section G4 - Pipe Excavation, Trenching, Embedment, Encasement, and Backfilling. Flowable backfill may be used as an alternative for the trench backfill specified on the shaft excavation support details (in the Drawings) at no additional cost to Owner.
2. Coordinate backfilling with the installation of final carrier pipe, manholes, and other system appurtenances.

3.5 SITE QUALITY CONTROL

A. Field Tests and Inspections

1. Allow access and furnish necessary assistance and cooperation to aid in the observations, measurements, data, and sample collection, including, but not limited to the following:
   a. The Engineer shall have access to the trenchless shafts or pits prior to, during, and following all boring operations.
      1) This shall include, but not be limited to, visual inspection of installed pipe and verification of line and grade.
      2) The Contractor shall provide safe access in accordance with all safety regulations.
   b. The Engineer shall have access to spoils removed from the boring excavation prior to, during, and following all boring operations.

3.6 SAFETY

A. The work has been classified as potentially-gassy in accordance with the Code of Federal Regulations, 29 CFR 1926 Safety and Health Regulations for Construction (OSHA).

B. The Contractor is responsible for safety on the Site.

1. Perform all Work in accordance with the current applicable regulations of the Federal, State, and local agencies.
2. In the event of conflict, comply with the more restrictive applicable requirement.

C. No gasoline powered equipment shall be permitted in shafts/pits.

1. Diesel, electrical, hydraulic, and air powered equipment are acceptable, subject to applicable local, State, and Federal regulations.

D. Furnish and operate a temporary ventilation system in accordance with applicable safety requirements when personnel are underground.
   1. Perform all required air and gas monitoring.
   2. Ventilation system shall provide a sufficient supply of fresh air and maintain an atmosphere free of toxic or flammable gasses in all underground work areas.

E. Perform all work in accordance with all current applicable regulations and safety requirements of the Federal, State, and Local agencies.

F. Comply with all applicable provisions of OSHA 29 CFR Part 1926, Subpart S, Underground Construction and Subpart P, Excavations.
   1. In the event of conflict, comply with the more stringent requirements.

G. If personnel will enter the pipe during construction, the Contractor shall develop an emergency response plan for rescuing personnel trapped underground in a shaft excavation or pipe.
   1. Keep on-site all equipment required for emergency response in accordance with the agency having jurisdiction.

END OF SECTION

[THIS PAGE INTENTIONALLY LEFT BLANK]

Westwood

TCEQ WPAP Approval Letters

Jon Niermann, *Chairman*
Emily Lindley, *Commissioner*
Bobby Janecka, *Commissioner*
Toby Baker, *Executive Director*

TEXAS COMMISSION ON ENVIRONMENTAL QUALITY

Protecting Texas by Reducing and Preventing Pollution

February 25, 2022

Mr. Miles Terry
Jackson-Shaw Company
4890 Alpha Road, Suite 100
Dallas, Texas 75244

Re: Edwards Aquifer, Williamson County

NAME OF PROJECT: Jackson-Shaw Phase 1; Located at 4811 N. HWY 35; Georgetown, Texas

TYPE OF PLAN: Request for Approval of a Water Pollution Abatement Plan (WPAP); 30 Texas Administrative Code (TAC) Chapter 213 Edwards Aquifer

Edwards Aquifer Protection Program ID No. 11002817; Regulated Entity No. RN111383972

Dear Mr. Terry:

The Texas Commission on Environmental Quality (TCEQ) has completed its review of the WPAP application for the above-referenced project submitted to the Austin Regional Office by Pacheco Koch Consulting Engineers, Inc. on behalf of Jackson-Shaw Company on December 3, 2021. Final review of the WPAP was completed after additional material was received on February 22, 2022. As presented to the TCEQ, the Temporary and Permanent Best Management Practices (BMPs) were selected, and construction plans were prepared by a Texas Licensed Professional Engineer to be in general compliance with the requirements of 30 TAC Chapter 213. These planning materials were sealed, signed, and dated by a Texas Licensed Professional Engineer. Therefore, based on the engineer's concurrence of compliance, the planning materials for construction of the proposed project and pollution abatement measures are hereby approved subject to applicable state rules and the conditions in this letter. The applicant or a person affected may file with the chief clerk a motion for reconsideration of the executive director's final action on this Edwards Aquifer Protection Plan. A motion for reconsideration must be filed no later than 23 days after the date of this approval letter. *This approval expires two (2) years from the date of this letter unless, prior to the expiration date, more than 10 percent of the construction has commenced on the project or an extension of time has been requested.*

PROJECT DESCRIPTION

The proposed non-residential project will have an area of approximately 73.85 acres. It will include 3 buildings, grading, drainage improvements, drives, parking, utilities, detention, water quality facilities, and associated appurtenances. The impervious cover will be 45.87 acres (62.11 percent). Project wastewater will be disposed of by conveyance to the existing Pecan Branch Wastewater Treatment Plant.

PERMANENT POLLUTION ABATEMENT MEASURES

To prevent the pollution of stormwater runoff originating on-site or upgradient of the site and potentially flowing across and off the site after construction, a wet basin (Pond 1) and an extended detention (Pond 2) in series with a grassy swale, designed using the TCEQ technical guidance document, Complying with the Edwards Aquifer Rules: Technical Guidance on Best Management Practices (2005), will be constructed to treat stormwater runoff. The required total suspended solids (TSS) treatment for this project is 39,928 pounds of TSS generated from the 45.87 acres of impervious cover. The approved measures meet the required 80 percent removal of the increased load in TSS caused by the project.

GEOLOGY

According to the Geologic Assessment included with the application, the site is characterized surficially by Edwards Limestone and Quaternary fluviatile terrace deposits. No sensitive geologic features were identified in the Geologic Assessment. The TCEQ site assessment conducted on February 15, 2022, revealed the site to be generally as described.

SPECIAL CONDITIONS

I. All permanent pollution abatement measures shall be operational prior to occupancy of the facility.

II. All sediment and/or media removed from the water quality basin during maintenance activities shall be properly disposed of according to 30 TAC 330 or 30 TAC 335, as applicable.

STANDARD CONDITIONS

1. Pursuant to Chapter 7 Subchapter C of the Texas Water Code, any violations of the requirements in 30 TAC Chapter 213 may result in administrative penalties.
2. The holder of the approved Edwards Aquifer protection plan must comply with all provisions of 30 TAC Chapter 213 and all best management practices and measures contained in the approved plan. Additional and separate approvals, permits, registrations and/or authorizations from other TCEQ Programs (i.e., Stormwater, Water Rights, UIC) can be required depending on the specifics of the plan.
3. In addition to the rules of the Commission, the applicant may also be required to comply with state and local ordinances and regulations providing for the protection of water quality.

Prior to Commencement of Construction:

4. Within 60 days of receiving written approval of an Edwards Aquifer Protection Plan, the applicant must submit to the Austin Regional Office, proof of recordation of notice in the county deed records, with the volume and page number(s) of the county deed records of the county in which the property is located. A description of the property boundaries shall be included in the deed recordation in the county deed records. A suggested form (Deed Recordation Affidavit, TCEQ-0625) that you may use to deed record the approved WPAP is enclosed.
5. All contractors conducting regulated activities at the referenced project location shall be provided a copy of this notice of approval. At least one complete copy of the approved WPAP and this notice of approval shall be maintained at the project location until all regulated activities are completed.

6. Modification to the activities described in the referenced WPAP application following the date of approval may require the submittal of a plan to modify this approval, including the payment of appropriate fees and all information necessary for its review and approval prior to initiating construction of the modifications.
7. The applicant must provide written notification of intent to commence construction, replacement, or rehabilitation of the referenced project. Notification must be submitted to the Austin Regional Office no later than 48 hours prior to commencement of the regulated activity. Written notification must include the date on which the regulated activity will commence, the name of the approved plan and program ID number for the regulated activity, and the name of the prime contractor with the name and telephone number of the contact person. The executive director will use the notification to determine if the approved plan is eligible for an extension.
8. Temporary erosion and sedimentation (E&S) controls, i.e., silt fences, rock berms, stabilized construction entrances, or other controls described in the approved WPAP, must be installed prior to construction, and maintained during construction. Temporary E&S controls may be removed when vegetation is established, and the construction area is stabilized. If a water quality pond is proposed, it shall be used as a sedimentation basin during construction. The TCEQ may monitor stormwater discharges from the site to evaluate the adequacy of temporary E&S control measures. Additional controls may be necessary if excessive solids are being discharged from the site.
9. All borings with depths greater than or equal to 20 feet must be plugged with non-shrink grout from the bottom of the hole to within three (3) feet of the surface. The remainder of the hole must be backfilled with cuttings from the boring. All borings less than 20 feet must be backfilled with cuttings from the boring. All borings must be backfilled or plugged within four (4) days of completion of the drilling operation. Voids may be filled with gravel.

<u>During Construction:</u>

10. During the course of regulated activities related to this project, the applicant or agent shall comply with all applicable provisions of 30 TAC Chapter 213, Edwards Aquifer. The applicant shall remain responsible for the provisions and conditions of this approval until such responsibility is legally transferred to another person or entity.
11. This approval does not authorize the installation of temporary aboveground storage tanks on this project. If the contractor desires to install a temporary aboveground storage tank for use during construction, an application to modify this approval must be submitted and approved prior to installation. The application must include information related to tank location and spill containment. Refer to Standard Condition No. 6, above.
12. If any sensitive feature (caves, solution cavities, sink holes, etc.) is discovered during construction, all regulated activities near the feature must be suspended immediately. The applicant or his agent must immediately notify the Austin Regional Office of the discovery of the feature. Regulated activities near the feature may not proceed until the executive director has reviewed and approved the methods proposed to protect the feature and the aquifer from potentially adverse impacts to water quality. The plan must be sealed, signed, and dated by a Texas Licensed Professional Engineer.
13. All water wells, including injection, dewatering, and monitoring wells must be in compliance with the requirements of the Texas Department of Licensing and Regulation under Title 16 TAC Chapter 76 (relating to Water Well Drillers and Pump Installers) and all other locally applicable rules, as appropriate.

14. If sediment escapes the construction site, the sediment must be removed at a frequency sufficient to minimize offsite impacts to water quality (e.g., fugitive sediment in street being washed into surface streams or sensitive features by the next rain). Sediment must be removed from sediment traps or sedimentation ponds not later than when design capacity has been reduced by 50 percent. Litter, construction debris, and construction chemicals shall be prevented from becoming stormwater discharge pollutants.
15. Intentional discharges of sediment laden water are not allowed. If dewatering becomes necessary, the discharge will be filtered through appropriately selected best management practices. These may include vegetated filter strips, sediment traps, rock berms, silt fence rings, etc.
16. The following records shall be maintained and made available to the executive director upon request: the dates when major grading activities occur, the dates when construction activities temporarily or permanently cease on a portion of the site, and the dates when stabilization measures are initiated.
17. Stabilization measures shall be initiated as soon as practicable in portions of the site where construction activities have temporarily or permanently ceased, and construction activities will not resume within 21 days. When the initiation of stabilization measures by the 14th day is precluded by weather conditions, stabilization measures shall be initiated as soon as practicable.

<u>After Completion of Construction:</u>

18. A Texas Licensed Professional Engineer must certify in writing that the permanent BMPs or measures were constructed as designed. The certification letter must be submitted to the Austin Regional Office within 30 days of site completion.
19. The applicant shall be responsible for maintaining the permanent BMPs after construction until such time as the maintenance obligation is either assumed in writing by another entity having ownership or control of the property (such as without limitation, an owner's association, a new property owner or lessee, a district, or municipality) or the ownership of the property is transferred to the entity. The regulated entity shall then be responsible for maintenance until another entity assumes such obligations in writing or ownership is transferred. A copy of the transfer of responsibility must be filed with the executive director through Austin Regional Office within 30 days of the transfer. A copy of the transfer form (TCEQ-10263) is enclosed.
20. Upon legal transfer of this property, the new owner(s) is required to comply with all terms of the approved Edwards Aquifer protection plan. If the new owner intends to commence any new regulated activity on the site, a new Edwards Aquifer protection plan that specifically addresses the new activity must be submitted to the executive director. Approval of the plan for the new regulated activity by the executive director is required prior to commencement of the new regulated activity.
21. An Edwards Aquifer protection plan approval or extension will expire, and no extension will be granted if more than 50 percent of the total construction has not been completed within ten years from the initial approval of a plan. A new Edwards Aquifer protection plan must be submitted to the Austin Regional Office with the appropriate fees for review and approval by the executive director prior to commencing any additional regulated activities.
22. At project locations where construction is initiated and abandoned, or not completed, the site shall be returned to a condition such that the aquifer is protected from potential contamination.

This action is taken under authority delegated by the Executive Director of the Texas Commission on Environmental Quality. If you have any questions or require additional information, please contact James "Bo" Slone, P.G. of the Edwards Aquifer Protection Program of the Austin Region office at (512) 339-2929.

Sincerely,

Lillian Butler

Lillian Butler, Section Manager
Edwards Aquifer Protection Program
Texas Commission on Environmental Quality

LIB/jcs

Enclosure: Deed Recordation Affidavit, Form TCEQ-0625
Change in Responsibility for Maintenance of Permanent BMPs, Form TCEQ-10263

Cc: Ms. Hollis Scheffler, P.E., Pacheco Koch Consulting Engineers, Inc.

Jon Niermann, *Chairman*
Emily Lindley, *Commissioner*
Bobby Janecka, *Commissioner*
Erin E. Chancellor, *Interim Executive Director*

TEXAS COMMISSION ON ENVIRONMENTAL QUALITY

Protecting Texas by Reducing and Preventing Pollution

March 31, 2023

Mr. Miles Terry
Jackson Shaw - Cross Point
4890 Alpha Rd., Suite 100
Dallas, Texas 75244

Re: Edwards Aquifer, Williamson County
NAME OF PROJECT: Cross Point Phase 2; Located at 5301 S. Interstate 35; Georgetown, Texas
TYPE OF PLAN: Request for Approval of a Water Pollution Abatement Plan (WPAP); 30 Texas Administrative Code (TAC) Chapter 213 Edwards Aquifer
Edwards Aquifer Protection Program ID No. 11003438; Regulated Entity No. RN11628699

Dear Mr. Terry:

The Texas Commission on Environmental Quality (TCEQ) has completed its review of the WPAP application for the above-referenced project submitted to the Austin Regional Office by Westwood Professional Services on behalf of Jackson Shaw – Cross Point on January 3, 2023. Final review of the WPAP was completed after additional material was received on March 27, 2023. As presented to the TCEQ, the Temporary and Permanent Best Management Practices (BMPs) were selected and construction plans were prepared by a Texas Licensed Professional Engineer to be in general compliance with the requirements of 30 TAC Chapter 213. These planning materials were sealed, signed and dated by a Texas Licensed Professional Engineer. Therefore, based on the engineer's concurrence of compliance, the planning materials for construction of the proposed project and pollution abatement measures are hereby approved subject to applicable state rules and the conditions in this letter. The applicant or a person affected may file with the chief clerk a motion for reconsideration of the executive director's final action on this Edwards Aquifer Protection Plan. A motion for reconsideration must be filed no later than 23 days after the date of this approval letter. *This approval expires two (2) years from the date of this letter unless, prior to the expiration date, more than 10 percent of the construction has commenced on the project or an extension of time has been requested.*

PROJECT DESCRIPTION

The proposed non-residential project will have an area of approximately 106.65 acres. It will include the construction of four buildings, grading, drainage improvements, utilities, detention, parking, vehicular conveyance, water quality facilities, and associated appurtenances. The impervious cover will be 33.90 acres (31.79 percent). Project wastewater will be disposed of by conveyance to the existing Pecan Branch Wastewater Treatment Plant.

PERMANENT POLLUTION ABATEMENT MEASURES

To prevent the pollution of stormwater runoff originating on-site or upgradient of the site and potentially flowing across and off the site after construction, an extended detention basin and grassy swale in series, designed using the TCEQ technical guidance document, Complying with the Edwards Aquifer Rules: Technical Guidance on Best Management Practices (2005), will be constructed to treat stormwater runoff. The required total suspended solids (TSS) treatment for this project is 29,507 pounds of TSS generated from the 33.90 acres of impervious cover. The approved measures meet the required 80 percent removal of the increased load in TSS caused by the project.

GEOLOGY

According to the Geologic Assessment included with the application, the site is characterized surficially by Quaternary fluviatile terrace deposits (Qt), Quaternary Alluvium (Qal), Edwards Limestone (Ked), and Georgetown Limestone (Kgt). No sensitive geologic features were identified in the Geologic Assessment. The TCEQ site assessment conducted on March 27, 2023, revealed the site to be generally as described.

SPECIAL CONDITIONS

I. All permanent pollution abatement measures shall be operational prior to occupancy of the facility.

II. All sediment and/or media removed from the water quality basin during maintenance activities shall be properly disposed of according to 30 TAC 330 or 30 TAC 335, as applicable.

STANDARD CONDITIONS

1. Pursuant to Chapter 7 Subchapter C of the Texas Water Code, any violations of the requirements in 30 TAC Chapter 213 may result in administrative penalties.
2. The holder of the approved Edwards Aquifer protection plan must comply with all provisions of 30 TAC Chapter 213 and all best management practices and measures contained in the approved plan. Additional and separate approvals, permits, registrations and/or authorizations from other TCEQ Programs (i.e., Stormwater, Water Rights, UIC) can be required depending on the specifics of the plan.
3. In addition to the rules of the Commission, the applicant may also be required to comply with state and local ordinances and regulations providing for the protection of water quality.

Prior to Commencement of Construction:

4. Within 60 days of receiving written approval of an Edwards Aquifer Protection Plan, the applicant must submit to the Austin Regional Office, proof of recordation of notice in the county deed records, with the volume and page number(s) of the county deed records of the county in which the property is located. A description of the property boundaries shall be included in the deed recordation in the county deed records. A suggested form (Deed Recordation Affidavit, TCEQ-0625) that you may use to deed record the approved WPAP is enclosed.
5. All contractors conducting regulated activities at the referenced project location shall be provided a copy of this notice of approval. At least one complete copy of the approved WPAP and this notice of approval shall be maintained at the project location until all regulated activities are completed.

6. Modification to the activities described in the referenced WPAP application following the date of approval may require the submittal of a plan to modify this approval, including the payment of appropriate fees and all information necessary for its review and approval prior to initiating construction of the modifications.
7. The applicant must provide written notification of intent to commence construction, replacement, or rehabilitation of the referenced project. Notification must be submitted to the Austin Regional Office no later than 48 hours prior to commencement of the regulated activity. Written notification must include the date on which the regulated activity will commence, the name of the approved plan and program ID number for the regulated activity, and the name of the prime contractor with the name and telephone number of the contact person. The executive director will use the notification to determine if the approved plan is eligible for an extension.
8. Temporary erosion and sedimentation (E&S) controls, i.e., silt fences, rock berms, stabilized construction entrances, or other controls described in the approved WPAP, must be installed prior to construction and maintained during construction. Temporary E&S controls may be removed when vegetation is established and the construction area is stabilized. If a water quality pond is proposed, it shall be used as a sedimentation basin during construction. The TCEQ may monitor stormwater discharges from the site to evaluate the adequacy of temporary E&S control measures. Additional controls may be necessary if excessive solids are being discharged from the site.
9. All borings with depths greater than or equal to 20 feet must be plugged with non-shrink grout from the bottom of the hole to within three (3) feet of the surface. The remainder of the hole must be backfilled with cuttings from the boring. All borings less than 20 feet must be backfilled with cuttings from the boring. All borings must be backfilled or plugged within four (4) days of completion of the drilling operation. Voids may be filled with gravel.

<u>During Construction:</u>

10. During the course of regulated activities related to this project, the applicant or agent shall comply with all applicable provisions of 30 TAC Chapter 213, Edwards Aquifer. The applicant shall remain responsible for the provisions and conditions of this approval until such responsibility is legally transferred to another person or entity.
11. This approval does not authorize the installation of temporary aboveground storage tanks on this project. If the contractor desires to install a temporary aboveground storage tank for use during construction, an application to modify this approval must be submitted and approved prior to installation. The application must include information related to tank location and spill containment. Refer to Standard Condition No. 6, above.
12. If any sensitive feature (caves, solution cavities, sink holes, etc.) is discovered during construction, all regulated activities near the feature must be suspended immediately. The applicant or his agent must immediately notify the Austin Regional Office of the discovery of the feature. Regulated activities near the feature may not proceed until the executive director has reviewed and approved the methods proposed to protect the feature and the aquifer from potentially adverse impacts to water quality. The plan must be sealed, signed, and dated by a Texas Licensed Professional Engineer.
13. All water wells, including injection, dewatering, and monitoring wells must be in compliance with the requirements of the Texas Department of Licensing and Regulation under Title 16 TAC Chapter 76 (relating to Water Well Drillers and Pump Installers) and all other locally applicable rules, as appropriate.
14. If sediment escapes the construction site, the sediment must be removed at a frequency sufficient to minimize offsite impacts to water quality (e.g., fugitive sediment in street being washed into surface streams or sensitive features by the next rain). Sediment must be removed from sediment traps or sedimentation ponds not later than when design capacity has been reduced by 50 percent. Litter, construction debris, and construction chemicals shall be prevented from becoming stormwater discharge pollutants.

15. Intentional discharges of sediment laden water are not allowed. If dewatering becomes necessary, the discharge will be filtered through appropriately selected best management practices. These may include vegetated filter strips, sediment traps, rock berms, silt fence rings, etc.
16. The following records shall be maintained and made available to the executive director upon request: the dates when major grading activities occur, the dates when construction activities temporarily or permanently cease on a portion of the site, and the dates when stabilization measures are initiated.
17. Stabilization measures shall be initiated as soon as practicable in portions of the site where construction activities have temporarily or permanently ceased, and construction activities will not resume within 21 days. When the initiation of stabilization measures by the 14th day is precluded by weather conditions, stabilization measures shall be initiated as soon as practicable.

<u>After Completion of Construction:</u>

18. A Texas Licensed Professional Engineer must certify in writing that the permanent BMPs or measures were constructed as designed. The certification letter must be submitted to the Austin Regional Office within 30 days of site completion.
19. The applicant shall be responsible for maintaining the permanent BMPs after construction until such time as the maintenance obligation is either assumed in writing by another entity having ownership or control of the property (such as without limitation, an owner's association, a new property owner or lessee, a district, or municipality) or the ownership of the property is transferred to the entity. The regulated entity shall then be responsible for maintenance until another entity assumes such obligations in writing or ownership is transferred. A copy of the transfer of responsibility must be filed with the executive director through Austin Regional Office within 30 days of the transfer. A copy of the transfer form (TCEQ-10263) is enclosed.
20. Upon legal transfer of this property, the new owner(s) is required to comply with all terms of the approved Edwards Aquifer protection plan. If the new owner intends to commence any new regulated activity on the site, a new Edwards Aquifer protection plan that specifically addresses the new activity must be submitted to the executive director. Approval of the plan for the new regulated activity by the executive director is required prior to commencement of the new regulated activity.
21. An Edwards Aquifer protection plan approval or extension will expire and no extension will be granted if more than 50 percent of the total construction has not been completed within ten years from the initial approval of a plan. A new Edwards Aquifer protection plan must be submitted to the Austin Regional Office with the appropriate fees for review and approval by the executive director prior to commencing any additional regulated activities.
22. At project locations where construction is initiated and abandoned, or not completed, the site shall be returned to a condition such that the aquifer is protected from potential contamination.

This action is taken under authority delegated by the Executive Director of the Texas Commission on Environmental Quality. If you have any questions or require additional information, please contact James "Bo" Slone, P.G. of the Edwards Aquifer Protection Program of the Austin Region office at (512) 339-2929.

Sincerely,

Lillian Butler

Lillian Butler, Section Manager
Edwards Aquifer Protection Program
Texas Commission on Environmental Quality

LIB/jcs

Enclosure: Deed Recordation Affidavit, Form TCEQ-0625
Change in Responsibility for Maintenance of Permanent BMPs, Form TCEQ-10263

Cc: Ms. Hollis Scheffler, P.E., Westwood Professional Services

Change in Responsibility for Maintenance
on Permanent Best Management Practices and Measures

The applicant is no longer responsible for maintaining the permanent best management practice (BMP) and other measures. The project information and the new entity responsible for maintenance is listed below.

Customer: _____

Regulated Entity Name: _____

Site Address: _____

City, Texas, Zip: _____

County: _____

Approval Letter Date: _____

BMPs for the project: _____

New Responsible Party: _____

Name of contact: _____

Mailing Address: _____

City, State: _____ Zip: _____

Telephone: _____ FAX: _____

_____ _____

Signature of New Responsible Party Date

I acknowledge and understand that I am assuming full responsibility for maintaining all permanent best management practices and measures approved by the TCEQ for the site, until another entity assumes such obligations in writing or ownership is transferred.

If you have questions on how to fill out this form or about the Edwards Aquifer protection program, please contact us at 210/490-3096 for projects located in the San Antonio Region or 512/339-2929 for projects located in the Austin Region.

Individuals are entitled to request and review their personal information that the agency gathers on its forms. They may also have any errors in their information corrected. To review such information, contact us at 512/239-3282.

Deed Recordation Affidavit
Edwards Aquifer Protection Plan

THE STATE OF TEXAS §

County of _____ §

BEFORE ME, the undersigned authority, on this day personally appeared _____ who, being duly sworn by me, deposes and says:

(1) That my name is _____and that I own the real property described below.

(2) That said real property is subject to an EDWARDS AQUIFER PROTECTION PLAN which was required under the 30 Texas Administrative Code (TAC) Chapter 213.

(3) That the EDWARDS AQUIFER PROTECTION PLAN for said real property was approved by the Texas Commission on Environmental Quality (TCEQ) on _____.

A copy of the letter of approval from the TCEQ is attached to this affidavit as Exhibit A and is incorporated herein by reference.

(4) The said real property is located in _____ County, Texas, and the legal description of the property is as follows:

_____
LANDOWNER-AFFIANT

SWORN AND SUBSCRIBED TO before me, on this __ day of _____, ____.

_____
NOTARY PUBLIC

THE STATE OF _____ §

County of _____ §

BEFORE ME, the undersigned authority, on this day personally appeared _____ known to me to be the person whose name is subscribed to the foregoing instrument, and acknowledged to me that (s)he executed same for the purpose and consideration therein expressed.

GIVEN under my hand and seal of office on this __ day of _____, _____.

_____
NOTARY PUBLIC

_____
Typed or Printed Name of Notary

MY COMMISSION EXPIRES: _____

Temporary Stormwater Section

Texas Commission on Environmental Quality

for Regulated Activities on the Edwards Aquifer Recharge Zone and Relating to 30 TAC §213.5(b)(4)(A), (B), (D)(I) and (G); Effective June 1, 1999

To ensure that the application is administratively complete, confirm that all fields in the form are complete, verify that all requested information is provided, consistently reference the same site and contact person in all forms in the application, and ensure forms are signed by the appropriate party.

Note: Including all the information requested in the form and attachments contributes to more streamlined technical reviews.

Signature

To the best of my knowledge, the responses to this form accurately reflect all information requested concerning the proposed regulated activities and methods to protect the Edwards Aquifer. This **Temporary Stormwater Section** is hereby submitted for TCEQ review and executive director approval. The application was prepared by:

Print Name of Customer/Agent: Jacob Valentien, P.E.

Date: 03/08/2024

Signature of Customer/Agent:



Regulated Entity Name: JSACQ Georgetown LP

Project Information

Potential Sources of Contamination

Examples: Fuel storage and use, chemical storage and use, use of asphaltic products, construction vehicles tracking onto public roads, and existing solid waste.

1. Fuels for construction equipment and hazardous substances which will be used during construction:

   ☐ The following fuels and/or hazardous substances will be stored on the site: _____

   These fuels and/or hazardous substances will be stored in:

   ☐ Aboveground storage tanks with a cumulative storage capacity of less than 250 gallons will be stored on the site for less than one (1) year.

☐ Aboveground storage tanks with a cumulative storage capacity between 250 gallons and 499 gallons will be stored on the site for less than one (1) year.

☐ Aboveground storage tanks with a cumulative storage capacity of 500 gallons or more will be stored on the site. An Aboveground Storage Tank Facility Plan application must be submitted to the appropriate regional office of the TCEQ prior to moving the tanks onto the project.

☒ Fuels and hazardous substances will not be stored on the site.

2. ☒ **Attachment A - Spill Response Actions**. A site specific description of the measures to be taken to contain any spill of hydrocarbons or hazardous substances is attached.

3. ☒ Temporary aboveground storage tank systems of 250 gallons or more cumulative storage capacity must be located a minimum horizontal distance of 150 feet from any domestic, industrial, irrigation, or public water supply well, or other sensitive feature.

4. ☒ **Attachment B - Potential Sources of Contamination**. A description of any activities or processes which may be a potential source of contamination affecting surface water quality is attached.

Sequence of Construction

5. ☒ **Attachment C - Sequence of Major Activities**. A description of the sequence of major activities which will disturb soils for major portions of the site (grubbing, excavation, grading, utilities, and infrastructure installation) is attached.

   ☒ For each activity described, an estimate (in acres) of the total area of the site to be disturbed by each activity is given.

   ☒ For each activity described, include a description of appropriate temporary control measures and the general timing (or sequence) during the construction process that the measures will be implemented.

6. ☒ Name the receiving water(s) at or near the site which will be disturbed or which will receive discharges from disturbed areas of the project: Dry Berry Creek

Temporary Best Management Practices (TBMPs)

Erosion control examples: tree protection, interceptor swales, level spreaders, outlet stabilization, blankets or matting, mulch, and sod. Sediment control examples: stabilized construction exit, silt fence, filter dikes, rock berms, buffer strips, sediment traps, and sediment basins. Please refer to the Technical Guidance Manual for guidelines and specifications. All structural BMPs must be shown on the site plan.

7. ☒ **Attachment D – Temporary Best Management Practices and Measures**. TBMPs and measures will prevent pollution of surface water, groundwater, and stormwater. The construction-phase BMPs for erosion and sediment controls have been designed to retain sediment on site to the extent practicable. The following information is attached:

☒ A description of how BMPs and measures will prevent pollution of surface water, groundwater or stormwater that originates upgradient from the site and flows across the site.

☒ A description of how BMPs and measures will prevent pollution of surface water or groundwater that originates on-site or flows off site, including pollution caused by contaminated stormwater runoff from the site.

☒ A description of how BMPs and measures will prevent pollutants from entering surface streams, sensitive features, or the aquifer.

☒ A description of how, to the maximum extent practicable, BMPs and measures will maintain flow to naturally-occurring sensitive features identified in either the geologic assessment, TCEQ inspections, or during excavation, blasting, or construction.

8. ☒ The temporary sealing of a naturally-occurring sensitive feature which accepts recharge to the Edwards Aquifer as a temporary pollution abatement measure during active construction should be avoided.

☐ **Attachment E - Request to Temporarily Seal a Feature**. A request to temporarily seal a feature is attached. The request includes justification as to why no reasonable and practicable alternative exists for each feature.

☒ There will be no temporary sealing of naturally-occurring sensitive features on the site.

9. ☒ **Attachment F - Structural Practices**. A description of the structural practices that will be used to divert flows away from exposed soils, to store flows, or to otherwise limit runoff discharge of pollutants from exposed areas of the site is attached. Placement of structural practices in floodplains has been avoided.

10. ☒ **Attachment G - Drainage Area Map**. A drainage area map supporting the following requirements is attached:

☐ For areas that will have more than 10 acres within a common drainage area disturbed at one time, a sediment basin will be provided.

☐ For areas that will have more than 10 acres within a common drainage area disturbed at one time, a smaller sediment basin and/or sediment trap(s) will be used.

☒ For areas that will have more than 10 acres within a common drainage area disturbed at one time, a sediment basin or other equivalent controls are not attainable, but other TBMPs and measures will be used in combination to protect down slope and side slope boundaries of the construction area.

☐ There are no areas greater than 10 acres within a common drainage area that will be disturbed at one time. A smaller sediment basin and/or sediment trap(s) will be used in combination with other erosion and sediment controls within each disturbed drainage area.

☐ There are no areas greater than 10 acres within a common drainage area that will be disturbed at one time. Erosion and sediment controls other than sediment basins or sediment traps within each disturbed drainage area will be used.

11. ☐ **Attachment H - Temporary Sediment Pond(s) Plans and Calculations**. Temporary sediment pond or basin construction plans and design calculations for a proposed temporary BMP or measure have been prepared by or under the direct supervision of a Texas Licensed Professional Engineer. All construction plans and design information must be signed, sealed, and dated by the Texas Licensed Professional Engineer. Construction plans for the proposed temporary BMPs and measures are attached.

☒ N/A

12. ☒ **Attachment I - Inspection and Maintenance for BMPs.** A plan for the inspection of each temporary BMP(s) and measure(s) and for their timely maintenance, repairs, and, if necessary, retrofit is attached. A description of the documentation procedures, recordkeeping practices, and inspection frequency are included in the plan and are specific to the site and/or BMP.

13. ☒ All control measures must be properly selected, installed, and maintained in accordance with the manufacturer's specifications and good engineering practices. If periodic inspections by the applicant or the executive director, or other information indicate a control has been used inappropriately, or incorrectly, the applicant must replace or modify the control for site situations.

14. ☒ If sediment escapes the construction site, off-site accumulations of sediment must be removed at a frequency sufficient to minimize offsite impacts to water quality (e.g., fugitive sediment in street being washed into surface streams or sensitive features by the next rain).

15. ☒ Sediment must be removed from sediment traps or sedimentation ponds not later than when design capacity has been reduced by 50%. A permanent stake will be provided that can indicate when the sediment occupies 50% of the basin volume.

16. ☒ Litter, construction debris, and construction chemicals exposed to stormwater shall be prevented from becoming a pollutant source for stormwater discharges (e.g., screening outfalls, picked up daily).

Soil Stabilization Practices

Examples: establishment of temporary vegetation, establishment of permanent vegetation, mulching, geotextiles, sod stabilization, vegetative buffer strips, protection of trees, or preservation of mature vegetation.

17. ☒ **Attachment J - Schedule of Interim and Permanent Soil Stabilization Practices**. A schedule of the interim and permanent soil stabilization practices for the site is attached.

18. ☒ Records must be kept at the site of the dates when major grading activities occur, the dates when construction activities temporarily or permanently cease on a portion of the site, and the dates when stabilization measures are initiated.

19. ☒ Stabilization practices must be initiated as soon as practicable where construction activities have temporarily or permanently ceased.

Administrative Information

20. ☒ All structural controls will be inspected and maintained according to the submitted and approved operation and maintenance plan for the project.

21. ☒ If any geologic or manmade features, such as caves, faults, sinkholes, etc., are discovered, all regulated activities near the feature will be immediately suspended. The appropriate TCEQ Regional Office shall be immediately notified. Regulated activities must cease and not continue until the TCEQ has reviewed and approved the methods proposed to protect the aquifer from any adverse impacts.

22. ☒ Silt fences, diversion berms, and other temporary erosion and sediment controls will be constructed and maintained as appropriate to prevent pollutants from entering sensitive features discovered during construction.

Westwood

Attachment A- Spill Response Action

In accordance with the Edwards Aquifer Technical Guidance on Best Management Practices Operators, the following actions will be followed to ensure appropriate measures are taken in the case of a spill:

Education

- Be aware that different materials pollute in different amounts. Make sure that each employee knows what a “significant spill” is for each material they use, and what is the appropriate response for “significant” and “insignificant” spills. Employees should also be aware of when spill must be reported to the TCEQ. Information available in 30 TAC 327.4 and 40 CFR 302.4.
- Educate employees and subcontractors on potential dangers to humans and the environment from spills and leaks.
- Hold regular meetings to discuss and reinforce appropriate disposal procedures (incorporate into regular safety meetings).
- Establish a continuing education program to indoctrinate new employees.
- Have contractor’s superintendent or representative oversee and enforce proper spill prevention and control measures.

General Measures

- To the extent that the work can be accomplished safely, spills of oil, petroleum products, substances listed under 40 CFR parts 110,117, and 302, and sanitary and septic wastes should be contained and cleaned up immediately.
- Store hazardous materials and wastes in covered containers and protect from vandalism.
- Place a stockpile of spill cleanup materials where it will be readily accessible.
- Train employees in spill prevention and cleanup.
- Designate responsible individuals to oversee and enforce control measures.
- Spills should be covered and protected from stormwater runon during rainfall to the extent that it doesn’t compromise cleanup activities.
- Do not bury or wash spills with water.
- Store and dispose of used clean up materials, contaminated materials, and recovered spill material that is no longer suitable for the intended purpose in conformance with the provisions in applicable BMPs.
- Do not allow water used for cleaning and decontamination to enter storm drains or watercourses. Collect and dispose of contaminated water in accordance with applicable regulations.
- Contain water overflow or minor water spillage and do not allow it to discharge into drainage facilities or watercourses.
- Place Material Safety Data Sheets (MSDS), as well as proper storage, cleanup, and spill reporting instructions for hazardous materials stored or used on the project site in an open, conspicuous, and accessible location.
- Keep waste storage areas clean, well organized, and equipped with ample cleanup supplies as appropriate for the materials being stored. Perimeter controls, containment structures, covers, and liners should be repaired or replaced as needed to maintain proper function.

Cleanup

- Clean up leaks and spills immediately.
- Use a rag for small spills on paved surfaces, a damp mop for general cleanup, and absorbent material for larger spills. If the spilled material is hazardous, then the used cleanup materials are also hazardous and must be disposed of as hazardous waste.
- Never hose down or bury dry material spills. Clean up as much of the material as possible and dispose of properly. See the waste management BMPs in this section for specific information.

Minor Spills

- Minor spills typically involve small quantities of oil, gasoline, paint, etc. which can be controlled by the first responder at the discovery of the spill.
- Use absorbent materials on small spills rather than hosing down or burying the spill.
- Absorbent materials should be promptly removed and disposed of properly.
- Follow the practice below for a minor spill:
- Contain the spread of the spill.
- Recover spilled materials.
- Clean the contaminated area and properly dispose of contaminated materials.

Semi-Significant Spills

- Contain spread of the spill.
- Notify the project foreman immediately.
- If the spill occurs on paved or impermeable surfaces, clean up using "dry" methods (absorbent materials, cat litter and/or rags). Contain the spill by encircling with absorbent materials and do not let the spill spread widely.
- If the spill occurs in dirt areas, immediately contain the spill by constructing an earthen dike. Dig up and properly dispose of contaminated soil.
- If the spill occurs during rain, cover spill with tarps or other material to prevent contaminating runoff.

Significant/Hazardous Spills

- Notify the TCEQ by telephone as soon as possible and within 24 hours at 512-339-2929 (Austin) or 210-490-3096 (San Antonio) between 8 AM and 5 PM. After hours, contact the Environmental Release Hotline at 1-800-832-8224. It is the contractor's responsibility to have all emergency phone numbers at the construction site.
- For spills of federal reportable quantities, in conformance with the requirements in 40 CFR parts 110,119, and 302, the contractor should notify the National Response Center at (800) 424-8802.
- Notification should first be made by telephone and followed up with a written report.
- The services of a spills contractor or a Haz-Mat team should be obtained immediately. Construction personnel should not attempt to clean up until the appropriate and qualified staffs have arrived at the job site.
- Other agencies which may need to be consulted include, but are not limited to, the City Police Department, County Sheriff Office, Fire Departments, etc.

Westwood

Attachment B- Potential Sources of Contamination

The following are potential sources of surface and groundwater contamination from construction activities:

- Clearing and grubbing
- Grading and site excavation
- Vehicle tracking
- Topsoil stripping and stockpiling
- Landscaping operations
- Staging and storage area
- Paving (including curb and gutter)
- Building Construction
- Concrete washout area

Westwood

Attachment C- Sequence of Major Event

The following sequence of construction is included in the construction plans:

1. Temporary erosion controls, silt fencing and tree protection fencing to be installed.

   Estimated area disturbed = 27.53 ac

   Estimated timing = 4 weeks

2. Pre-construction meeting to be held on-site.

   Estimated area disturbed = n/a ac

   Estimated timing = 1 day

3. Demolition of existing materials.

   Estimated area disturbed = 27.53 ac

   Estimated timing = 2 weeks

4. Site staking.

   Estimated area disturbed = 27.53 ac

   Estimated timing = 2 weeks

5. Wastewater improvements to begin.

   Estimated area disturbed = 27.53 ac

   Estimated timing = 42 weeks

6. Temporary erosion control measures to be inspected on a regular basis; any sediment buildup to be removed.

   Estimated area disturbed = n/a

   Estimated timing = 1 week

7. Site to be cleaned up and revegetated.

   Estimated area disturbed = 27.53 ac

Estimated timing = 6 weeks

8. Temporary erosion controls to be removed after permanent restoration of site is established.

   Estimated area disturbed = n/a

   Estimated timing = 1 week

Westwood

Attachment D- Temporary Best Management Practices and Measures

The following temporary best management practices will be conducted to prevent pollution of surface water, groundwater, and stormwater in accordance with the Edwards Aquifer Technical Guidance on Best Management Practices.

Temporary Vegetation

Vegetation will be used as a temporary stabilization technique for areas disturbed by construction, but not covered by pavement, buildings, or other structures. As a temporary control, vegetation will be used to stabilize stockpiles and barren areas that are inactive for long periods of time.

Dust Control

Dust control will prevent blowing and movement of dust from exposed soil surfaces, reduce on and off-site damage, health hazards and improve traffic safety. This practice is applicable to areas subject to dust blowing and movement where on and off-site damage is likely without treatment.

Temporary Construction Entrance/Exit

The temporary gravel construction entrance will provide a stable entrance/exit condition from the construction site and keep mud and sediment off public roads. A stabilized construction entrance is a stabilized pad of crushed stone located at any point traffic will be entering or leaving the construction site from a public right-of way, street, alley, sidewalk or parking area. The stabilized construction entrance will reduce or eliminate the tracking or flowing of sediment onto public rights of-way. This practice should be used at all points of construction ingress and egress.

Silt Fence

A silt fence is a barrier consisting of geotextile fabric supported by metal posts to prevent soil and sediment loss from a site. Proposed silt fences will be highly effective at controlling sediment from disturbed areas. They cause runoff to pond, allowing heavier solids to settle out.

Inlet Protection

All proposed inlets that may receive storm runoff from disturbed areas should be protected. Temporary inlet protection is a series of different measures that provide protection against silt transport or accumulation in storm sewer systems. This clogging can greatly reduce or completely stop the flow in the pipes. The different measures are used for different site conditions and inlet types. Filter barrier protection using silt fence is appropriate when the drainage area is less than one acre and the basin slope is less than five percent. This type of protection is not applicable in paved areas. Block and gravel protection is used when flows exceed 0.5 cubic feet per second and it is necessary to allow for overtopping to prevent flooding. This form of protection is also useful for curb type inlets as it works well in paved areas. Wire mesh and gravel protection is used when flows exceed 0.5 cubic feet per second and construction traffic may occur over the inlet. This form of protection may be used with both curb and drop inlets.

Concrete Washout Area

Westwood

The purpose of concrete washout areas is to prevent or reduce the discharge of pollutants to stormwater from concrete waste by conducting washout offsite, performing onsite washout in a designated area, and training employees and subcontractors.

The following steps will help reduce stormwater pollution from concrete wastes:

- Incorporate requirements for concrete waste management into material supplier and subcontractor agreements.
- Avoid mixing excess amounts of fresh concrete.
- Perform washout of concrete trucks in designated areas only.
- Do not wash out concrete trucks into storm drains, open ditches, streets, or streams.
- Do not allow excess concrete to be dumped onsite, except in designated areas.

For onsite washout:

- Locate washout area at least 50 feet from sensitive features, storm drains, open ditches, or water bodies. Do not allow runoff from this area by constructing a temporary pit or bermed area large enough for liquid and solid waste.
- Wash out wastes into the temporary pit where the concrete can set, be broken up, and then disposed properly.

Westwood

Attachment F- Structural Practices

Stormwater will be routed through the proposed silt fence and inlet protection for pollutant removal. The silt fence and mulch log will provide temporary sedimentation control during construction. No part of the site or placement of the structural practices will be encumbered by floodplain as shown on FEMA #48491C0285F.

Westwood

Attachment G - Drainage Maps

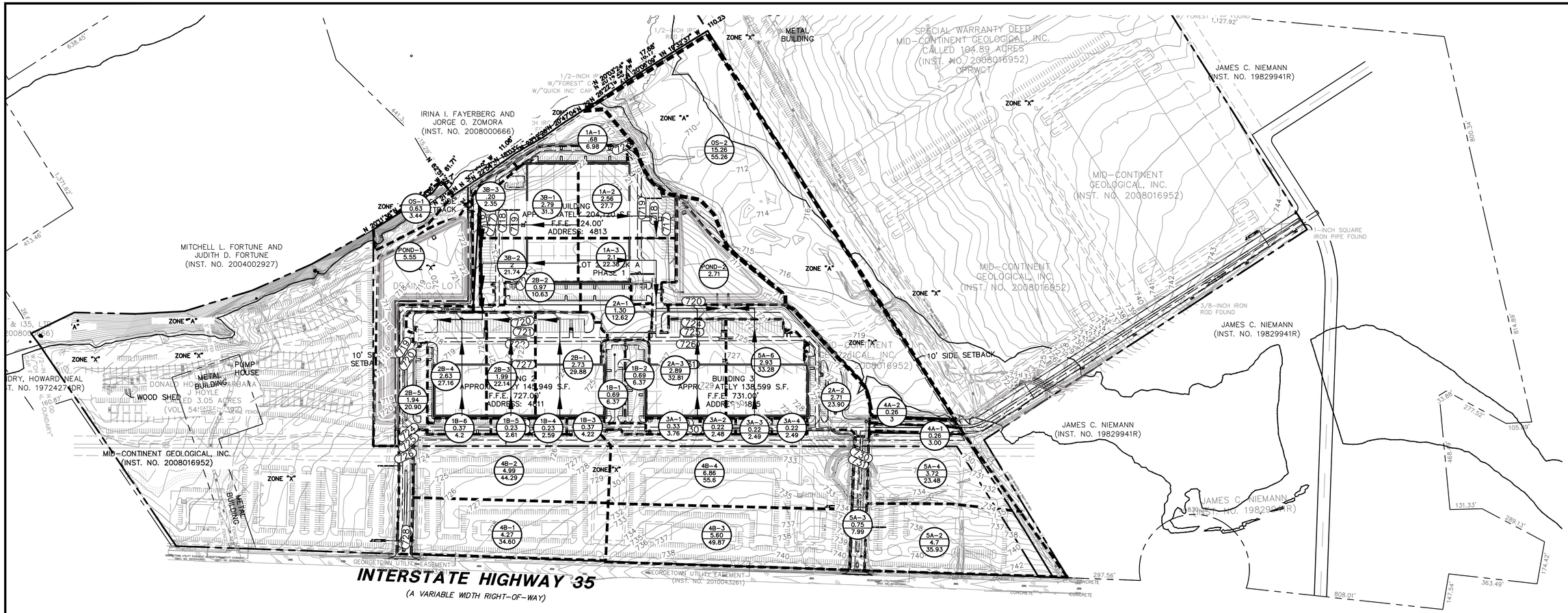
INTERSTATE HIGHWAY 35
(A VARIABLE WIDTH RIGHT-OF-WAY)
GEORGETOWN UTILITY EASEMENT
(INST. NO. 2010043261)
IRINA I. FAYERBERG AND
JORGE O. ZOMORA
(INST. NO. 2008000666)
MITCHELL L. FORTUNE AND
JUDITH D. FORTUNE
(INST. NO. 2004002927)
MID-CONTINENT GEOLOGICAL, INC.
(INST. NO. 2008016952)
SPECIAL WARRANTY DEED
MID-CONTINENT GEOLOGICAL, INC.
CALLED 104.89 ACRES
(INST. NO. 2008016952)
OPRWCT
JAMES C. NIEMANN
(INST. NO. 19829941R)
DONALD HOWARD NEAL
AND BARBARA J HOYLE
CALLED 3.05 ACRES
(VOL 541, PG 327)
METAL BUILDING
PUMP HOUSE
WOOD SHED
BUILDING 1
APPROXIMATELY 204,120 S.F.
F.F.E. 724.00'
ADDRESS: 4813
BUILDING 2
APPROXIMATELY 145,949 S.F.
F.F.E. 727.00'
ADDRESS: 4911
BUILDING 3
APPROXIMATELY 138,599 S.F.
F.F.E. 731.00'
ADDRESS: 5015
DRAINAGE LOT A
PHASE 1
22,385 SQ. FT.
10' SIDE SETBACK
ZONE "A"
ZONE "X"
1/2-INCH IRON ROD W/"FOREST" CAP FOUND
1/2-INCH IRON ROD W/"QUICK INC" CAP FOUND
1-INCH SQUARE IRON PIPE FOUND
3/8-INCH IRON ROD FOUND
POND-1
5.55
POND-2
2.71
OS-1
0.63
3.44
OS-2
15.26
55.26
1A-1
.68
6.98
1A-2
2.56
27.7
1A-3
2.1
22.38
2A-1
1.30
12.62
2A-2
2.71
23.90
2A-3
2.89
32.81
2B-1
2.73
29.88
2B-2
0.97
10.63
2B-3
1.99
22.14
2B-4
2.63
27.16
2B-5
1.94
20.90
3B-1
2.79
31.3
3B-2
21.74
3B-3
.20
2.35
1B-1
0.69
6.37
1B-2
0.69
6.37
1B-3
0.37
4.22
1B-4
0.23
2.59
1B-5
0.23
2.61
1B-6
0.37
4.2
3A-1
0.33
3.76
3A-2
0.22
2.48
3A-3
0.22
2.48
3A-4
0.22
2.49
4A-1
0.26
3.00
4A-2
0.26
3
4B-1
4.27
34.60
4B-2
4.99
44.29
4B-3
5.60
49.87
4B-4
6.86
55.6
5A-1
0.75
7.99
5A-2
4.7
35.93
5A-3
0.75
7.99
5A-4
3.72
23.48
5A-5
2.93
33.28
5A-6
2.93
33.28
297.56'
808.01'
363.49'
174.42'
147.54'
131.33'
289.13'
271.52'
105.10'
468.76'
1,127.92'
1,371.62'
638.45'
160.87'
41.46'
110.23'
N 20°03'24" W
17.66'
15.11'
N 70°56'09" W
19°32'37"
N 20°17'36" W
11.00'
N 70°42'24" W
61.71'
N 20°17'36" W
N 69°42'24" E
N 20°17'36" W
N 69°42'24" E
N 20°17'36" W
N 69°42'24" E

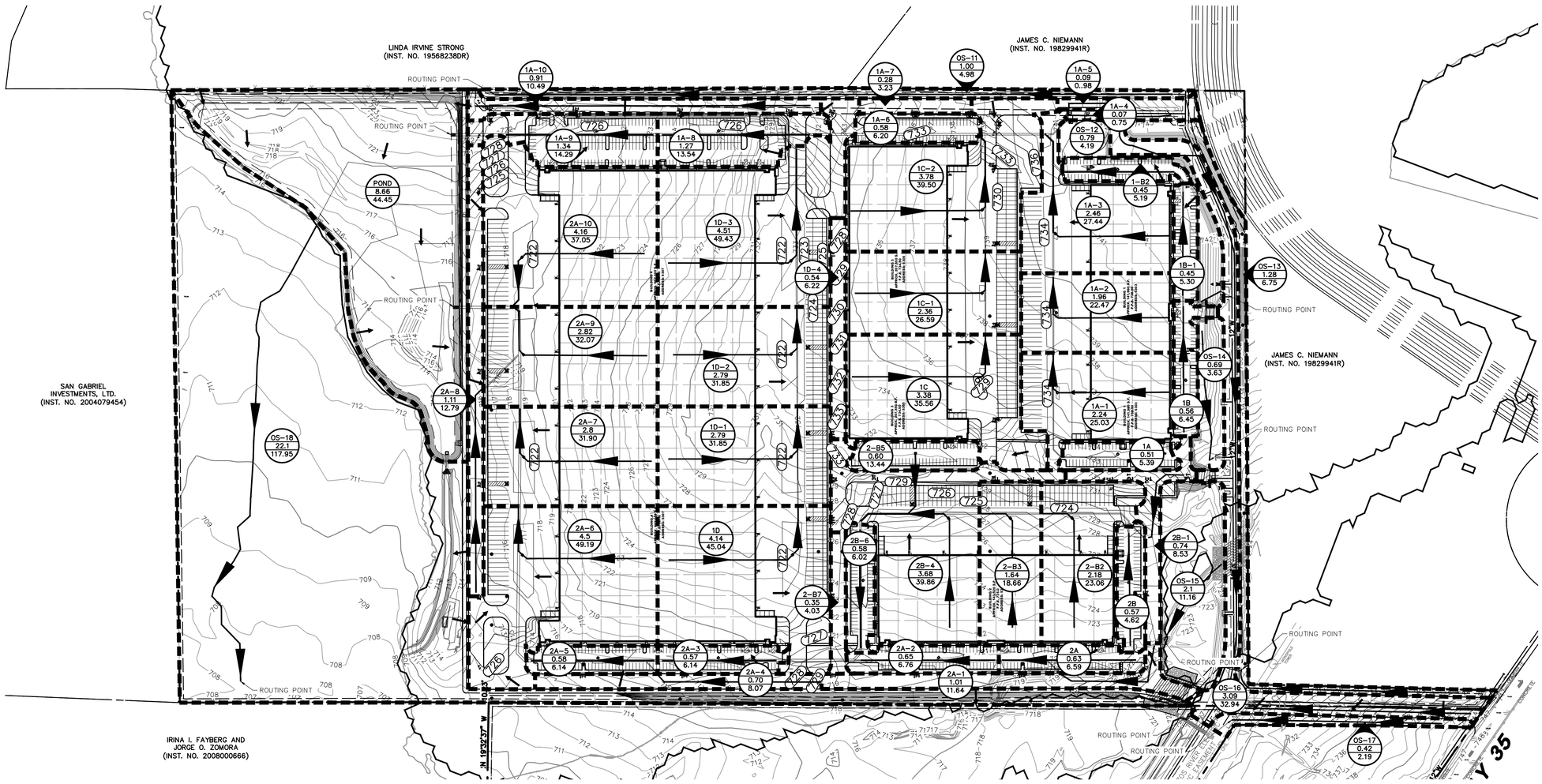

Pacheco Koch
a Westwood company
8701 N. MOPAC EXPY ■ STE. 320 ■ AUSTIN, TX 78759 ■ 512.485.0831
TX REG. ENGINEERING FIRM F-469
TX REG. SURVEYING FIRM LS-10008000

REVISIONS

NO.	DATE	DESCRIPTION	BY

CROSS POINT - PHASE 2
5301, 5303, 5305, & 5307 N IH-35 SB
GEORGETOWN, TEXAS, 78633

ULTIMATE DRAINAGE AREA MAP

STATE OF TEXAS
HOLLIS ANN SCHEFFLER
136049
LICENSED
PROFESSIONAL ENGINEER

THE SEAL APPEARING ON THIS DOCUMENT WAS AUTHORIZED BY SUPERVISOR OF HOLLIS ANN SCHEFFLER, P.E. 136049 ON 12/19/22. ALTERATION OF A SEALED DOCUMENT WITHOUT PROPER NOTIFICATION TO THE RESPONSIBLE ENGINEER IS AN OFFENSE UNDER THE TEXAS ENGINEERING PRACTICE ACT.

DESIGN	DRAWN	DATE
HAS	NBB	DEC 2022

SHEET NO.
14

XXXX-XXX-SDP

JASOMERA
12/19/2022 9:58 AM
M:\DWG-46\4670-22.587\DWG\CIVIL C3D 2018\4670-22.587_DAMS.DWG

PK-4670-22.587_DAMS.DWG

Westwood

Attachment J- Schedule on Interim and Permanent Soil Stabilization Practices

Seeding of the disturbed areas will be on-going after completion of the rough grading process. Temporary seeding will be utilized until permanent landscaping is installed. Seeding will occur on any areas that are undisturbed for a period of 14 days. If construction progress is stopped for a period of 14 days, soil stabilization practices must be initiated by the contractor. Permanent landscaping will be provided as soon as final grades are achieved and the final paving and building operations are completed.

Agent Authorization Form
For Required Signature
Edwards Aquifer Protection Program
Relating to 30 TAC Chapter 213
Effective June 1, 1999

I Michele Wheeler ;
Print Name

Vice President ,
Title - Owner/President/Other

of JSACQ Georgetown LP ;
Corporation/Partnership/Entity Name

have authorized Jacob W. Valentien, P.E.
Print Name of Agent/Engineer

of Westwood Professional Services
Print Name of Firm

to represent and act on the behalf of the above named Corporation, Partnership, or Entity for the purpose of preparing and submitting this plan application to the Texas Commission on Environmental Quality (TCEQ) for the review and approval consideration of regulated activities.

I also understand that:

1. The applicant is responsible for compliance with 30 Texas Administrative Code Chapter 213 and any condition of the TCEQ's approval letter. The TCEQ is authorized to assess administrative penalties of up to $10,000 per day per violation.

2. For those submitting an application who are not the property owner, but who have the right to control and possess the property, additional authorization is required from the owner.

3. Application fees are due and payable at the time the application is submitted. The application fee must be sent to the TCEQ cashier or to the appropriate regional office. The application will not be considered until the correct fee is received by the commission.

4. A notarized copy of the Agent Authorization Form must be provided for the person preparing the application, and this form must accompany the completed application.

5. No person shall commence any regulated activity on the Edwards Aquifer Recharge Zone, Contributing Zone or Transition Zone until the appropriate application for the activity has been filed with and approved by the Executive Director.

SIGNATURE PAGE:

Michele Wheeler
Applicant's Signature

11/28/23
Date

THE STATE OF Texas §

County of Dallas §

BEFORE ME, the undersigned authority, on this day personally appeared Michele Wheeler known to me to be the person whose name is subscribed to the foregoing instrument, and acknowledged to me that (s)he executed same for the purpose and consideration therein expressed.

GIVEN under my hand and seal of office on this 28th day of November, 2023.

Holli Grier
NOTARY PUBLIC

Holli Grier
Typed or Printed Name of Notary

MY COMMISSION EXPIRES: 04-01-2025

HOLLI GRIER
Notary Public, State of Texas
Comm. Expires 04-01-2025
Notary ID 2582155

Owner Authorization Form

for Required Signature for submitting and signing an application for an Edwards Aquifer Protection Plan (Plan) and conducting regulated activities in accordance with an approved Plan.

Texas Commission on Environmental Quality
Edwards Aquifer Protection Program
Relating to the Edwards Aquifer Rules of
Title 30 of the Texas Administrative Code
(30 TAC), Chapter 213
Effective June 1, 1999

Land Owner Authorization

I, SEUNG HEON LEE of Hanwha Advanced Materials America, LLC
Land Owner Name (Individual) / Firm (applicable to Legal Entities)

am the Owner of Record or Title Holder of the property located at:

Tracts R038978

(Legal description of the property referenced in the application)

and being duly authorized under 30 TAC § 213.4(c)(2) and § 213.4(d)(1) or § 213.23(c)(2) and § 213.23(d) to submit and sign an application for a Plan, do hereby authorize:

Michele Wheeler / JSACQ Georgetown LP

(Applicant Name / Plan Holder (Legal Entity or Individual))

to conduct:

Sanitary Sewer Collection System Permitting; Design and Construction of Public Utilities to be deeded to the City of Georgetown

(Description of the proposed regulated activities)

on the property described above or at:

(If applicable to a precise location for the authorized regulated activities)

Land Owner Acknowledgement

I, SEUNG HEON LEE of Hanwha Advanced Materials America, LLC
Land Owner Name (Individual) / Firm (applicable to Legal Entities)

understand that while Michele Wheeler / JSACQ Georgetown LP
Applicant Name / Plan Holder (Legal Entity or Individual)

is responsible for compliance with the approved or conditionally approved Plan and any special conditions of the approved Plan through all phases of Plan implementation,

I, SEUNG HEOH LEE of Hanwha Advanced Materials America, LLC
Land Owner Name (Individual) Firm (applicable to Legal Entities)

as Owner of Record or Title Holder of the property described above, I am ultimately responsible for ensuring that compliance with the approved or conditionally approved Plan and any special conditions of the approved Plan, through all phases of Plan implementation, is achieved even if the responsibility for compliance and the right to possess and control of the property referenced in the application has been contractually assumed by another legal entity.

I, SEUNG HEOH LEE of Hanwha Advanced Materials America, LLC
Land Owner Name (Individual) Firm (applicable to Legal Entities)

further understand that any failure to comply with any condition of the Executive Director's approval is a violation and is subject to administrative rule or orders and penalties as provided under 30 TAC § 213.10 (relating to Enforcement). Such violation may also be subject to civil penalties and injunction.

Land Owner Signature

Land Owner Signature

4/12/2024
Date

THE STATE OF § ALABAMA

County of § LEE

BEFORE ME, the undersigned authority, on this day personally appeared known to me to be the person whose name is subscribed to the foregoing instrument and acknowledged to me that (s)he executed same for the purpose and consideration therein expressed.

GIVEN under my hand and seal of office on this 12 day of April

NOTARY PUBLIC

Maritza Pozzi-Gamble
Typed or Printed Name of Notary

MY COMMISSION EXPIRES: 12/17/2025

Attached: (Mark all that apply)

- ☐ Lease Agreement
- ☐ Signed Contract
- ☐ Deed Recorded Easement
- ☐ Other legally binding document

Applicant Acknowledgement

I, Michele Wheeler (Applicant Name (Individual)) of JSACQ Georgetown LP (Firm (applicable to Legal Entities))

acknowledge that Hanwha Advanced Materials America, LLC (Land Owner Name (Legal Entity or Individual))

has provided JSACQ Georgetown LP (Applicant Name (Legal Entity or Individual))

with the right to possess and control the property referenced in the Edwards Aquifer Protection Plan (Plan).

I understand that JSACQ Georgetown LP (Applicant Name (Legal Entity or Individual))

is responsible, contractually or not, for compliance with the approved or conditionally approved Plan and any special conditions of the approved Plan through all phases of Plan implementation. I further understand that failure to comply with any condition of the Executive Director's approval is a violation and is subject to administrative rule or orders and penalties as provided under § 213.10 (relating to Enforcement). Such violation may also be subject to civil penalties and injunction.

Applicant Signature

Applicant Signature

11/28/23
Date

THE STATE OF § Texas

County of § Dallas

BEFORE ME, the undersigned authority, on this day personally appeared known to me to be the person whose name is subscribed to the foregoing instrument and acknowledged to me that (s)he executed same for the purpose and consideration therein expressed.

GIVEN under my hand and seal of office on this 28th day of November 2023

NOTARY PUBLIC

HOLLI GRIER
Notary Public, State of Texas
Comm. Expires 04-01-2025
Notary ID 2582155

Typed or Printed Name of Notary

MY COMMISSION EXPIRES: 04/01/2025

Owner Authorization Form

for Required Signature for submitting and signing an application for an Edwards Aquifer Protection Plan (Plan) and conducting regulated activities in accordance with an approved Plan.

Texas Commission on Environmental Quality
Edwards Aquifer Protection Program
Relating to the Edwards Aquifer Rules of
Title 30 of the Texas Administrative Code
(30 TAC), Chapter 213
Effective June 1, 1999

Land Owner Authorization

I, ROBERT J. WARD of Ward & Burke Berry Creek Inc
Land Owner Name (Individual) Firm (applicable to Legal Entities)

am the Owner of Record or Title Holder of the property located at:

Tracts R039046

(Legal description of the property referenced in the application)

and being duly authorized under 30 TAC § 213.4(c)(2) and § 213.4(d)(1) or § 213.23(c)(2) and § 213.23(d) to submit and sign an application for a Plan, do hereby authorize:

Michele Wheeler / JSACQ Georgetown LP

(Applicant Name / Plan Holder (Legal Entity or Individual))

to conduct:

Sanitary Sewer Collection System Permitting; Design and Construction of Public Utilities to be deeded to the City of Georgetown

(Description of the proposed regulated activities)

on the property described above or at:

(If applicable to a precise location for the authorized regulated activities)

Land Owner Acknowledgement

I, ROBERT J WARD of Ward & Burke Berry Creek Inc
Land Owner Name (Individual) Firm (applicable to Legal Entities)

understand that while Michele Wheeler /
Applicant Name / Plan Holder (Legal Entity or Individual)

is responsible for compliance with the approved or conditionally approved Plan and any special conditions of the approved Plan through all phases of Plan implementation,

I, ROBERT J WARD of Ward & Burke Berry Creek Inc
Land Owner Name (Individual) Firm (applicable to Legal Entities)

as Owner of Record or Title Holder of the property described above, I am ultimately responsible for ensuring that compliance with the approved or conditionally approved Plan and any special conditions of the approved Plan, through all phases of Plan implementation, is achieved even if the responsibility for compliance and the right to possess and control of the property referenced in the application has been contractually assumed by another legal entity.

I, ROBERT J WARD of Ward & Burke Berry Creek Inc
Land Owner Name (Individual) Firm (applicable to Legal Entities)

further understand that any failure to comply with any condition of the Executive Director's approval is a violation and is subject to administrative rule or orders and penalties as provided under 30 TAC § 213.10 (relating to Enforcement). Such violation may also be subject to civil penalties and injunction.

Land Owner Signature

Robert J Ward
Land Owner Signature

May 15 2024
Date

THE STATE OF § TEXAS

County of § Williamson

BEFORE ME, the undersigned authority, on this day personally appeared known to me to be the person whose name is subscribed to the foregoing instrument and acknowledged to me that (s)he executed same for the purpose and consideration therein expressed.

GIVEN under my hand and seal of office on this 15th day of May 2024

Aideen McGirl
NOTARY PUBLIC

AIDEEN MC GIRL
Typed or Printed Name of Notary

MY COMMISSION EXPIRES: 01/12/2028

Attached: (Mark all that apply)

- ☐ Lease Agreement
- ☐ Signed Contract
- ☐ Deed Recorded Easement
- ☐ Other legally binding document

NOTARY PUBLIC STATE OF TEXAS
AIDEEN CATHERINE MCGIRL
My Notary ID # 134712346
Expires January 12, 2028

Applicant Acknowledgement

I, Michele Wheeler (Applicant Name (Individual)) of JSACQ Georgetown LP (Firm (applicable to Legal Entities))

acknowledge that Ward & Burke Berry Creek Inc (Land Owner Name (Legal Entity or Individual))

has provided JSACQ Georgetown LP (Applicant Name (Legal Entity or Individual))

with the right to possess and control the property referenced in the Edwards Aquifer Protection Plan (Plan).

I understand that JSACQ Georgetown LP (Applicant Name (Legal Entity or Individual))

is responsible, contractually or not, for compliance with the approved or conditionally approved Plan and any special conditions of the approved Plan through all phases of Plan implementation. I further understand that failure to comply with any condition of the Executive Director's approval is a violation and is subject to administrative rule or orders and penalties as provided under § 213.10 (relating to Enforcement). Such violation may also be subject to civil penalties and injunction.

Applicant Signature

Applicant Signature

May 15, 2024
Date

THE STATE OF § Texas

County of § Dallas

BEFORE ME, the undersigned authority, on this day personally appeared known to me to be the person whose name is subscribed to the foregoing instrument and acknowledged to me that (s)he executed same for the purpose and consideration therein expressed.

GIVEN under my hand and seal of office on this 15th day of May 2024

NOTARY PUBLIC

HOLLI GRIER
Notary Public, State of Texas
Comm. Expires 04-01-2025
Notary ID 2582155

Holli Grier
Typed or Printed Name of Notary

MY COMMISSION EXPIRES: 04-01-2025

Owner Authorization Form

for Required Signature for submitting and signing an application for an Edwards Aquifer Protection Plan (Plan) and conducting regulated activities in accordance with an approved Plan.

Texas Commission on Environmental Quality
Edwards Aquifer Protection Program
Relating to the Edwards Aquifer Rules of
Title 30 of the Texas Administrative Code
(30 TAC), Chapter 213
Effective June 1, 1999

Land Owner Authorization

I, Gayle McElhanon of N/A
Land Owner Name (Individual) Firm (applicable to Legal Entities)

am the Owner of Record or Title Holder of the property located at:

Tracts R329743

(Legal description of the property referenced in the application)

and being duly authorized under 30 TAC § 213.4(c)(2) and § 213.4(d)(1) or § 213.23(c)(2) and § 213.23(d) to submit and sign an application for a Plan, do hereby authorize:

Michele Wheeler / JSACQ Georgetown LP

(Applicant Name / Plan Holder (Legal Entity or Individual))

to conduct:

Sanitary Sewer Collection System Permitting; Design and Construction of Public Utilities to be deeded to the City of Georgetown

(Description of the proposed regulated activities)

on the property described above or at:

(If applicable to a precise location for the authorized regulated activities)

Land Owner Acknowledgement

I, Gayle McElhanon of N/A
Land Owner Name (Individual) Firm (applicable to Legal Entities)

understand that while Michele Wheeler / JSACQ Georgetown LP
Applicant Name / Plan Holder (Legal Entity or Individual)

is responsible for compliance with the approved or conditionally approved Plan and any special conditions of the approved Plan through all phases of Plan implementation,

I, Gayle McElhanon of N/A
Land Owner Name (Individual) Firm (applicable to Legal Entities)

as Owner of Record or Title Holder of the property described above, I am ultimately responsible for ensuring that compliance with the approved or conditionally approved Plan and any special conditions of the approved Plan, through all phases of Plan implementation, is achieved even if the responsibility for compliance and the right to possess and control of the property referenced in the application has been contractually assumed by another legal entity.

I, Gayle McElhanon of N/A
Land Owner Name (Individual) Firm (applicable to Legal Entities)

further understand that any failure to comply with any condition of the Executive Director's approval is a violation and is subject to administrative rule or orders and penalties as provided under 30 TAC § 213.10 (relating to Enforcement). Such violation may also be subject to civil penalties and injunction.

Land Owner Signature

Gayle McElhanon 6/28/23
Land Owner Signature Date

THE STATE OF § Texas

County of § Williamson

BEFORE ME, the undersigned authority, on this day personally appeared known to me to be the person whose name is subscribed to the foregoing instrument and acknowledged to me that (s)he executed same for the purpose and consideration therein expressed.

GIVEN under my hand and seal of office on this 28th day of June

CAMRY JEAN HECKEROTH
Notary ID #133829936
My Commission Expires
June 24, 2026

NOTARY PUBLIC

Camry Heckeroth
Typed or Printed Name of Notary

MY COMMISSION EXPIRES: 6/24/26

Attached: (Mark all that apply)

- ☐ Lease Agreement
- ☐ Signed Contract
- ☐ Deed Recorded Easement
- ☐ Other legally binding document

Applicant Acknowledgement

I, Michele Wheeler of JSACQ Georgetown LP

Applicant Name (Individual) Firm (applicable to Legal Entities)

acknowledge that Gayle Mcelhanon

Land Owner Name (Legal Entity or Individual)

has provided JSACQ Georgetown LP

Applicant Name (Legal Entity or Individual)

with the right to possess and control the property referenced in the Edwards Aquifer Protection Plan (Plan).

I understand that JSACQ Georgetown LP

Applicant Name (Legal Entity or Individual)

is responsible, contractually or not, for compliance with the approved or conditionally approved Plan and any special conditions of the approved Plan through all phases of Plan implementation. I further understand that failure to comply with any condition of the Executive Director's approval is a violation and is subject to administrative rule or orders and penalties as provided under § 213.10 (relating to Enforcement). Such violation may also be subject to civil penalties and injunction.

Applicant Signature

Applicant Signature

11/28/23

Date

THE STATE OF § Texas

County of § Dallas

BEFORE ME, the undersigned authority, on this day personally appeared known to me to be the person whose name is subscribed to the foregoing instrument and acknowledged to me that (s)he executed same for the purpose and consideration therein expressed.

GIVEN under my hand and seal of office on this 28th day of November 2023

HOLLI GRIER
Notary Public, State of Texas
Comm. Expires 04-01-2025
Notary ID 2582155

NOTARY PUBLIC

Holli Grier

Typed or Printed Name of Notary

MY COMMISSION EXPIRES: 04-01-2025

Owner Authorization Form

for Required Signature for submitting and signing an application for an Edwards Aquifer Protection Plan (Plan) and conducting regulated activities in accordance with an approved Plan.

Texas Commission on Environmental Quality
Edwards Aquifer Protection Program
Relating to the Edwards Aquifer Rules of
Title 30 of the Texas Administrative Code
(30 TAC), Chapter 213
Effective June 1, 1999

Land Owner Authorization

I, Gayle McElhanon of N/A
Land Owner Name (Individual) Firm (applicable to Legal Entities)

am the Owner of Record or Title Holder of the property located at:

Tracts R329742

(Legal description of the property referenced in the application)

and being duly authorized under 30 TAC § 213.4(c)(2) and § 213.4(d)(1) or § 213.23(c)(2) and § 213.23(d) to submit and sign an application for a Plan, do hereby authorize:

Michele Wheeler / JSACQ Georgetown LP

(Applicant Name / Plan Holder (Legal Entity or Individual))

to conduct:

Sanitary Sewer Collection System Permitting; Design and Construction of Public Utilities to be deeded to the City of Georgetown

(Description of the proposed regulated activities)

on the property described above or at:

(If applicable to a precise location for the authorized regulated activities)

Land Owner Acknowledgement

I, Gayle McElhanon of N/A
Land Owner Name (Individual) Firm (applicable to Legal Entities)

understand that while Michele Wheeler / JSACQ Georgetown LP
Applicant Name / Plan Holder (Legal Entity or Individual)

is responsible for compliance with the approved or conditionally approved Plan and any special conditions of the approved Plan through all phases of Plan implementation,

I, Gayle McElhanon of N/A
Land Owner Name (Individual) Firm (applicable to Legal Entities)

as Owner of Record or Title Holder of the property described above, I am ultimately responsible for ensuring that compliance with the approved or conditionally approved Plan and any special conditions of the approved Plan, through all phases of Plan implementation, is achieved even if the responsibility for compliance and the right to possess and control of the property referenced in the application has been contractually assumed by another legal entity.

I, Gayle McElhanon of N/A
Land Owner Name (Individual) Firm (applicable to Legal Entities)

further understand that any failure to comply with any condition of the Executive Director's approval is a violation and is subject to administrative rule or orders and penalties as provided under 30 TAC § 213.10 (relating to Enforcement). Such violation may also be subject to civil penalties and injunction.

Land Owner Signature

Gayle McElhanon 6/28/23
Land Owner Signature Date

THE STATE OF § Texas

County of § Williamson

BEFORE ME, the undersigned authority, on this day personally appeared known to me to be the person whose name is subscribed to the foregoing instrument and acknowledged to me that (s)he executed same for the purpose and consideration therein expressed.

GIVEN under my hand and seal of office on this 28th day of June

CAMRY JEAN HECKEROTH
Notary ID #133829936
My Commission Expires
June 24, 2026

NOTARY PUBLIC

Camry Heckeroth
Typed or Printed Name of Notary

MY COMMISSION EXPIRES: 6/24/26

Attached: (Mark all that apply)

- ☐ Lease Agreement
- ☐ Signed Contract
- ☐ Deed Recorded Easement
- ☐ Other legally binding document

Applicant Acknowledgement

I, Michele Wheeler of JSACQ Georgetown LP

Applicant Name (Individual) Firm (applicable to Legal Entities)

acknowledge that Gayle Mcelhanon

Land Owner Name (Legal Entity or Individual)

has provided JSACQ Georgetown LP

Applicant Name (Legal Entity or Individual)

with the right to possess and control the property referenced in the Edwards Aquifer Protection Plan (Plan).

I understand that JSACQ Georgetown LP

Applicant Name (Legal Entity or Individual)

is responsible, contractually or not, for compliance with the approved or conditionally approved Plan and any special conditions of the approved Plan through all phases of Plan implementation. I further understand that failure to comply with any condition of the Executive Director's approval is a violation and is subject to administrative rule or orders and penalties as provided under § 213.10 (relating to Enforcement). Such violation may also be subject to civil penalties and injunction.

Applicant Signature

Applicant Signature

11/28/23

Date

THE STATE OF § Texas

County of § Dallas

BEFORE ME, the undersigned authority, on this day personally appeared known to me to be the person whose name is subscribed to the foregoing instrument and acknowledged to me that (s)he executed same for the purpose and consideration therein expressed.

GIVEN under my hand and seal of office on this 28th day of November 2023

HOLLI GRIER
Notary Public, State of Texas
Comm. Expires 04-01-2025
Notary ID 2582155

NOTARY PUBLIC

Holli Grier

Typed or Printed Name of Notary

MY COMMISSION EXPIRES: 04-01-2025

Owner Authorization Form

for Required Signature for submitting and signing an application for an Edwards Aquifer Protection Plan (Plan) and conducting regulated activities in accordance with an approved Plan.

Texas Commission on Environmental Quality
Edwards Aquifer Protection Program
Relating to the Edwards Aquifer Rules of
Title 30 of the Texas Administrative Code
(30 TAC), Chapter 213
Effective June 1, 1999

Land Owner Authorization

I, Gayle McElhanon of N/A
Land Owner Name (Individual) Firm (applicable to Legal Entities)

am the Owner of Record or Title Holder of the property located at:

Tracts R055003

(Legal description of the property referenced in the application)

and being duly authorized under 30 TAC § 213.4(c)(2) and § 213.4(d)(1) or § 213.23(c)(2) and § 213.23(d) to submit and sign an application for a Plan, do hereby authorize:

Michele Wheeler / JSACQ Georgetown LP

(Applicant Name / Plan Holder (Legal Entity or Individual))

to conduct:

Sanitary Sewer Collection System Permitting; Design and Construction of Public Utilities to be deeded to the City of Georgetown

(Description of the proposed regulated activities)

on the property described above or at:

(If applicable to a precise location for the authorized regulated activities)

Land Owner Acknowledgement

I, Gayle McElhanon of N/A
Land Owner Name (Individual) Firm (applicable to Legal Entities)

understand that while Michele Wheeler / JSACQ Georgetown LP
Applicant Name / Plan Holder (Legal Entity or Individual)

is responsible for compliance with the approved or conditionally approved Plan and any special conditions of the approved Plan through all phases of Plan implementation,

I, Gayle McElhanon of N/A
Land Owner Name (Individual) Firm (applicable to Legal Entities)

as Owner of Record or Title Holder of the property described above, I am ultimately responsible for ensuring that compliance with the approved or conditionally approved Plan and any special conditions of the approved Plan, through all phases of Plan implementation, is achieved even if the responsibility for compliance and the right to possess and control of the property referenced in the application has been contractually assumed by another legal entity.

I, Gayle McElhanon of N/A
Land Owner Name (Individual) Firm (applicable to Legal Entities)

further understand that any failure to comply with any condition of the Executive Director's approval is a violation and is subject to administrative rule or orders and penalties as provided under 30 TAC § 213.10 (relating to Enforcement). Such violation may also be subject to civil penalties and injunction.

Land Owner Signature

Gayle McElhanon 6/28/23
Land Owner Signature Date

THE STATE OF § Texas

County of § Williamson

BEFORE ME, the undersigned authority, on this day personally appeared known to me to be the person whose name is subscribed to the foregoing instrument and acknowledged to me that (s)he executed same for the purpose and consideration therein expressed.

GIVEN under my hand and seal of office on this 28th day of June

CAMRY JEAN HECKEROTH
Notary ID #133829936
My Commission Expires
June 24, 2026

NOTARY PUBLIC

Camry Heckeroth
Typed or Printed Name of Notary

MY COMMISSION EXPIRES: 6/24/26

Attached: (Mark all that apply)

- ☐ Lease Agreement
- ☐ Signed Contract
- ☐ Deed Recorded Easement
- ☐ Other legally binding document

Applicant Acknowledgement

I, Michele Wheeler of JSACQ Georgetown LP

Applicant Name (Individual) Firm (applicable to Legal Entities)

acknowledge that Gayle Mcelhanon

Land Owner Name (Legal Entity or Individual)

has provided JSACQ Georgetown LP

Applicant Name (Legal Entity or Individual)

with the right to possess and control the property referenced in the Edwards Aquifer Protection Plan (Plan).

I understand that JSACQ Georgetown LP

Applicant Name (Legal Entity or Individual)

is responsible, contractually or not, for compliance with the approved or conditionally approved Plan and any special conditions of the approved Plan through all phases of Plan implementation. I further understand that failure to comply with any condition of the Executive Director's approval is a violation and is subject to administrative rule or orders and penalties as provided under § 213.10 (relating to Enforcement). Such violation may also be subject to civil penalties and injunction.

Applicant Signature

Applicant Signature

11/28/23

Date

THE STATE OF § Texas

County of § Dallas

BEFORE ME, the undersigned authority, on this day personally appeared known to me to be the person whose name is subscribed to the foregoing instrument and acknowledged to me that (s)he executed same for the purpose and consideration therein expressed.

GIVEN under my hand and seal of office on this 28th day of November 2023

HOLLI GRIER
Notary Public, State of Texas
Comm. Expires 04-01-2025
Notary ID 2582155

NOTARY PUBLIC

Holli Grier

Typed or Printed Name of Notary

MY COMMISSION EXPIRES: 04-01-2025

Owner Authorization Form

for Required Signature for submitting and signing an application for an Edwards Aquifer Protection Plan (Plan) and conducting regulated activities in accordance with an approved Plan.

Texas Commission on Environmental Quality
Edwards Aquifer Protection Program
Relating to the Edwards Aquifer Rules of
Title 30 of the Texas Administrative Code
(30 TAC), Chapter 213
Effective June 1, 1999

Land Owner Authorization

I, Gayle McElhanon of N/A
Land Owner Name (Individual) Firm (applicable to Legal Entities)

am the Owner of Record or Title Holder of the property located at:

Tracts R475017

(Legal description of the property referenced in the application)

and being duly authorized under 30 TAC § 213.4(c)(2) and § 213.4(d)(1) or § 213.23(c)(2) and § 213.23(d) to submit and sign an application for a Plan, do hereby authorize:

Michele Wheeler / JSACQ Georgetown LP

(Applicant Name / Plan Holder (Legal Entity or Individual))

to conduct:

Sanitary Sewer Collection System Permitting; Design and Construction of Public Utilities to be deeded to the City of Georgetown

(Description of the proposed regulated activities)

on the property described above or at:

(If applicable to a precise location for the authorized regulated activities)

Land Owner Acknowledgement

I, Gayle McElhanon of N/A
Land Owner Name (Individual) Firm (applicable to Legal Entities)

understand that while Michele Wheeler / JSACQ Georgetown LP
Applicant Name / Plan Holder (Legal Entity or Individual)

is responsible for compliance with the approved or conditionally approved Plan and any special conditions of the approved Plan through all phases of Plan implementation,

I, Gayle McElhanon of N/A
Land Owner Name (Individual) Firm (applicable to Legal Entities)

as Owner of Record or Title Holder of the property described above, I am ultimately responsible for ensuring that compliance with the approved or conditionally approved Plan and any special conditions of the approved Plan, through all phases of Plan implementation, is achieved even if the responsibility for compliance and the right to possess and control of the property referenced in the application has been contractually assumed by another legal entity.

I, Gayle McElhanon of N/A
Land Owner Name (Individual) Firm (applicable to Legal Entities)

further understand that any failure to comply with any condition of the Executive Director's approval is a violation and is subject to administrative rule or orders and penalties as provided under 30 TAC § 213.10 (relating to Enforcement). Such violation may also be subject to civil penalties and injunction.

Land Owner Signature

Gayle McElhanon 6/28/23
Land Owner Signature Date

THE STATE OF § Texas

County of § Williamson

BEFORE ME, the undersigned authority, on this day personally appeared known to me to be the person whose name is subscribed to the foregoing instrument and acknowledged to me that (s)he executed same for the purpose and consideration therein expressed.

GIVEN under my hand and seal of office on this 28th day of June

CAMRY JEAN HECKEROTH
Notary ID #133829936
My Commission Expires
June 24, 2026

NOTARY PUBLIC

Camry Heckeroth
Typed or Printed Name of Notary

MY COMMISSION EXPIRES: 6/24/26

Attached: (Mark all that apply)

- ☐ Lease Agreement
- ☐ Signed Contract
- ☐ Deed Recorded Easement
- ☐ Other legally binding document

Applicant Acknowledgement

I, Michele Wheeler of JSACQ Georgetown LP

Applicant Name (Individual) Firm (applicable to Legal Entities)

acknowledge that Gayle Mcelhanon

Land Owner Name (Legal Entity or Individual)

has provided JSACQ Georgetown LP

Applicant Name (Legal Entity or Individual)

with the right to possess and control the property referenced in the Edwards Aquifer Protection Plan (Plan).

I understand that JSACQ Georgetown LP

Applicant Name (Legal Entity or Individual)

is responsible, contractually or not, for compliance with the approved or conditionally approved Plan and any special conditions of the approved Plan through all phases of Plan implementation. I further understand that failure to comply with any condition of the Executive Director's approval is a violation and is subject to administrative rule or orders and penalties as provided under § 213.10 (relating to Enforcement). Such violation may also be subject to civil penalties and injunction.

Applicant Signature

Applicant Signature

11/28/23

Date

THE STATE OF § Texas

County of § Dallas

BEFORE ME, the undersigned authority, on this day personally appeared known to me to be the person whose name is subscribed to the foregoing instrument and acknowledged to me that (s)he executed same for the purpose and consideration therein expressed.

GIVEN under my hand and seal of office on this 28th day of November 2023

HOLLI GRIER
Notary Public, State of Texas
Comm. Expires 04-01-2025
Notary ID 2582155

NOTARY PUBLIC

Holli Grier

Typed or Printed Name of Notary

MY COMMISSION EXPIRES: 04-01-2025

Owner Authorization Form

for Required Signature for submitting and signing an application for an Edwards Aquifer Protection Plan (Plan) and conducting regulated activities in accordance with an approved Plan.

Texas Commission on Environmental Quality
Edwards Aquifer Protection Program
Relating to the Edwards Aquifer Rules of
Title 30 of the Texas Administrative Code
(30 TAC), Chapter 213
Effective June 1, 1999

Land Owner Authorization

I, Donny Shellenbarger of Speedy Stop Foods Store LTD
Land Owner Name (Individual) Firm (applicable to Legal Entities)

am the Owner of Record or Title Holder of the property located at:

Tracts R315061
(Legal description of the property referenced in the application)

and being duly authorized under 30 TAC § 213.4(c)(2) and § 213.4(d)(1) or § 213.23(c)(2) and § 213.23(d) to submit and sign an application for a Plan, do hereby authorize:

Michele Wheeler / JSACQ Georgetown LP
(Applicant Name / Plan Holder (Legal Entity or Individual))

to conduct:

Sanitary Sewer Collection System Permitting; Design and Construction of Public Utilities to be deeded to the City of Georgetown
(Description of the proposed regulated activities)

on the property described above or at:

(If applicable to a precise location for the authorized regulated activities)

Land Owner Acknowledgement

I, Donny Shellenbarger of Speedy Stop Foods Store LTD
Land Owner Name (Individual) Firm (applicable to Legal Entities)

understand that while Michele Wheeler / JSACQ Georgetown LP
Applicant Name / Plan Holder (Legal Entity or Individual)

is responsible for compliance with the approved or conditionally approved Plan and any special conditions of the approved Plan through all phases of Plan implementation,

I, Donny Shellenbarger of Speedy Stop Foods Store LTD
Land Owner Name (Individual) Firm (applicable to Legal Entities)

as Owner of Record or Title Holder of the property described above, I am ultimately responsible for ensuring that compliance with the approved or conditionally approved Plan and any special conditions of the approved Plan, through all phases of Plan implementation, is achieved even if the responsibility for compliance and the right to possess and control of the property referenced in the application has been contractually assumed by another legal entity.

I, Donny Shellenbarger of Speedy Stop Foods Store LTD
Land Owner Name (Individual) Firm (applicable to Legal Entities)

further understand that any failure to comply with any condition of the Executive Director's approval is a violation and is subject to administrative rule or orders and penalties as provided under 30 TAC § 213.10 (relating to Enforcement). Such violation may also be subject to civil penalties and injunction.

Land Owner Signature

AUTHORIZED AGENT 5/18/23
Land Owner Signature Date

THE STATE OF § Texas

County of § Victoria

BEFORE ME, the undersigned authority, on this day personally appeared known to me to be the person whose name is subscribed to the foregoing instrument and acknowledged to me that (s)he executed same for the purpose and consideration therein expressed.

GIVEN under my hand and seal of office on this 18th day of May

KATHYREN LEMKE
NOTARY PUBLIC
STATE OF TEXAS
ID # 450232-7
My Comm. Expires 07-06-2024

Kathyren Lemke
NOTARY PUBLIC

Kathyren Lemke
Typed or Printed Name of Notary

MY COMMISSION EXPIRES: 07-06-2024

Attached: (Mark all that apply)

- ☐ Lease Agreement
- ☐ Signed Contract
- ☐ Deed Recorded Easement
- ☐ Other legally binding document

Applicant Acknowledgement

I, Michele Wheeler of JSACQ Georgetown LP

Applicant Name (Individual) Firm (applicable to Legal Entities)

acknowledge that Speedy Stop Food Stores, LTD

Land Owner Name (Legal Entity or Individual)

has provided JSACQ Georgetown LP

Applicant Name (Legal Entity or Individual)

with the right to possess and control the property referenced in the Edwards Aquifer Protection Plan (Plan).

I understand that JSACQ Georgetown LP

Applicant Name (Legal Entity or Individual)

is responsible, contractually or not, for compliance with the approved or conditionally approved Plan and any special conditions of the approved Plan through all phases of Plan implementation. I further understand that failure to comply with any condition of the Executive Director's approval is a violation and is subject to administrative rule or orders and penalties as provided under § 213.10 (relating to Enforcement). Such violation may also be subject to civil penalties and injunction.

Applicant Signature

Michele

Applicant Signature

11/28/23

Date

THE STATE OF § Texas

County of § Dallas

BEFORE ME, the undersigned authority, on this day personally appeared known to me to be the person whose name is subscribed to the foregoing instrument and acknowledged to me that (s)he executed same for the purpose and consideration therein expressed.

GIVEN under my hand and seal of office on this 28th day of November 2023

HOLLI GRIER
Notary Public, State of Texas
Comm. Expires 04-01-2025
Notary ID 2582155

Holli Grier

NOTARY PUBLIC

Holli Grier

Typed or Printed Name of Notary

MY COMMISSION EXPIRES: 04-01-2025

Owner Authorization Form

for Required Signature for submitting and signing an application for an Edwards Aquifer Protection Plan (Plan) and conducting regulated activities in accordance with an approved Plan.

Texas Commission on Environmental Quality
Edwards Aquifer Protection Program
Relating to the Edwards Aquifer Rules of
Title 30 of the Texas Administrative Code
(30 TAC), Chapter 213
Effective June 1, 1999

Land Owner Authorization

I, CHARLES M. HOLBROOK of The Trails LLC
Land Owner Name (Individual) Firm (applicable to Legal Entities)

am the Owner of Record or Title Holder of the property located at:

Tract R039052
(Legal description of the property referenced in the application)

and being duly authorized under 30 TAC § 213.4(c)(2) and § 213.4(d)(1) or § 213.23(c)(2) and § 213.23(d) to submit and sign an application for a Plan, do hereby authorize:

Michele Wheeler / JSACQ Georgetown LP
(Applicant Name / Plan Holder (Legal Entity or Individual))

to conduct:

Sanitary Sewer Collection System Permitting; Design and Construction of Public Utilities to be deeded to the City of Georgetown
(Description of the proposed regulated activities)

on the property described above or at:

(If applicable to a precise location for the authorized regulated activities)

Land Owner Acknowledgement

I, Charles M. Holbrook of The Trails LLC
Land Owner Name (Individual) Firm (applicable to Legal Entities)

understand that while Michele Wheeler / JSACQ Georgetown LP
Applicant Name / Plan Holder (Legal Entity or Individual)

is responsible for compliance with the approved or conditionally approved Plan and any special conditions of the approved Plan through all phases of Plan implementation,

I, _____ of The Trails LLC

Land Owner Name (Individual) Firm (applicable to Legal Entities)

as Owner of Record or Title Holder of the property described above, I am ultimately responsible for ensuring that compliance with the approved or conditionally approved Plan and any special conditions of the approved Plan, through all phases of Plan implementation, is achieved even if the responsibility for compliance and the right to possess and control of the property referenced in the application has been contractually assumed by another legal entity.

I, CHARLES M. HOLBROOK of The Trails LLC

Land Owner Name (Individual) Firm (applicable to Legal Entities)

further understand that any failure to comply with any condition of the Executive Director's approval is a violation and is subject to administrative rule or orders and penalties as provided under 30 TAC § 213.10 (relating to Enforcement). Such violation may also be subject to civil penalties and injunction.

Land Owner Signature

Land Owner Signature

5/11/2023

Date

THE STATE OF § Texas

County of § Harp

BEFORE ME, the undersigned authority, on this day personally appeared known to me to be the person whose name is subscribed to the foregoing instrument and acknowledged to me that (s)he executed same for the purpose and consideration therein expressed.

GIVEN under my hand and seal of office on this 11th day of May

Sandee Dean Miller

NOTARY PUBLIC

Sandee Dean Miller

Typed or Printed Name of Notary

Sandee Dean Miller
My Commission Expires
9/23/2025
Notary ID
7803683

MY COMMISSION EXPIRES: 9-23-2025

Attached: (Mark all that apply)

- ☐ Lease Agreement
- ☐ Signed Contract
- ☐ Deed Recorded Easement
- ☐ Other legally binding document

Applicant Acknowledgement

I, Michele Wheeler of JSACQ Georgetown LP
Applicant Name (Individual) Firm (applicable to Legal Entities)

acknowledge that The Trails LLC
Land Owner Name (Legal Entity or Individual)

has provided JSACQ Georgetown LP
Applicant Name (Legal Entity or Individual)

with the right to possess and control the property referenced in the Edwards Aquifer Protection Plan (Plan).

I understand that JSACQ Georgetown LP
Applicant Name (Legal Entity or Individual)

is responsible, contractually or not, for compliance with the approved or conditionally approved Plan and any special conditions of the approved Plan through all phases of Plan implementation. I further understand that failure to comply with any condition of the Executive Director's approval is a violation and is subject to administrative rule or orders and penalties as provided under § 213.10 (relating to Enforcement). Such violation may also be subject to civil penalties and injunction.

Applicant Signature

Michele Wheeler
Applicant Signature

11/28/23
Date

THE STATE OF § Texas

County of § Dallas

BEFORE ME, the undersigned authority, on this day personally appeared known to me to be the person whose name is subscribed to the foregoing instrument and acknowledged to me that (s)he executed same for the purpose and consideration therein expressed.

GIVEN under my hand and seal of office on this 28th day of November, 2023

HOLLI GRIER
Notary Public, State of Texas
Comm. Expires 04-01-2025
Notary ID 2582155

Holli Grier
NOTARY PUBLIC

Holli Grier
Typed or Printed Name of Notary

MY COMMISSION EXPIRES: 04-01-2025

Owner Authorization Form

for Required Signature for submitting and signing an application for an Edwards Aquifer Protection Plan (Plan) and conducting regulated activities in accordance with an approved Plan.

Texas Commission on Environmental Quality
Edwards Aquifer Protection Program
Relating to the Edwards Aquifer Rules of
Title 30 of the Texas Administrative Code
(30 TAC), Chapter 213
Effective June 1, 1999

Land Owner Authorization

I, Miles Terry of JSACQ Georgetown LP

Land Owner Name (Individual) | Firm (applicable to Legal Entities)

am the Owner of Record or Title Holder of the property located at:

Tracts R040508

(Legal description of the property referenced in the application)

and being duly authorized under 30 TAC § 213.4(c)(2) and § 213.4(d)(1) or § 213.23(c)(2) and § 213.23(d) to submit and sign an application for a Plan, do hereby authorize:

Miles Terry / JSACQ Georgetown LP

(Applicant Name / Plan Holder (Legal Entity or Individual))

to conduct:

Sanitary Sewer Collection System Permitting; Design and Construction of Public Utilities to be deeded to the City of Georgetown

(Description of the proposed regulated activities)

on the property described above or at:

(If applicable to a precise location for the authorized regulated activities)

Land Owner Acknowledgement

I, Miles Terry of JSACQ Georgetown LP

Land Owner Name (Individual) | Firm (applicable to Legal Entities)

understand that while JSACQ Georgetown LP

Applicant Name / Plan Holder (Legal Entity or Individual)

is responsible for compliance with the approved or conditionally approved Plan and any special conditions of the approved Plan through all phases of Plan implementation,

I, Miles Terry of JSACQ Georgetown LP

Land Owner Name (Individual) Firm (applicable to Legal Entities)

as Owner of Record or Title Holder of the property described above, I am ultimately responsible for ensuring that compliance with the approved or conditionally approved Plan and any special conditions of the approved Plan, through all phases of Plan implementation, is achieved even if the responsibility for compliance and the right to possess and control of the property referenced in the application has been contractually assumed by another legal entity.

I, Miles Terry of JSACQ Georgetown LP

Land Owner Name (Individual) Firm (applicable to Legal Entities)

further understand that any failure to comply with any condition of the Executive Director's approval is a violation and is subject to administrative rule or orders and penalties as provided under 30 TAC § 213.10 (relating to Enforcement). Such violation may also be subject to civil penalties and injunction.

Land Owner Signature

Land Owner Signature

5/8/23

Date

THE STATE OF § _____

County of § _____

BEFORE ME, the undersigned authority, on this day personally appeared known to me to be the person whose name is subscribed to the foregoing instrument and acknowledged to me that (s)he executed same for the purpose and consideration therein expressed.

GIVEN under my hand and seal of office on this 8th day of May, 2023

NOTARY PUBLIC

ELIDA R. CERNO
My Notary ID # 11262457
Expires July 22, 2026

Elida R. Cerno

Typed or Printed Name of Notary

MY COMMISSION EXPIRES: July 22, 2026

Attached: (Mark all that apply)

- ☐ Lease Agreement
- ☐ Signed Contract
- ☐ Deed Recorded Easement
- ☐ Other legally binding document

Applicant Acknowledgement

I, Miles Terry of JSACQ Georgetown LP
Applicant Name (Individual) Firm (applicable to Legal Entities)

acknowledge that JSACQ Georgetown LP
Land Owner Name (Legal Entity or Individual)

has provided JSACQ Georgetown LP
Applicant Name (Legal Entity or Individual)

with the right to possess and control the property referenced in the Edwards Aquifer Protection Plan (Plan).

I understand that JSACQ Georgetown LP
Applicant Name (Legal Entity or Individual)

is responsible, contractually or not, for compliance with the approved or conditionally approved Plan and any special conditions of the approved Plan through all phases of Plan implementation. I further understand that failure to comply with any condition of the Executive Director's approval is a violation and is subject to administrative rule or orders and penalties as provided under § 213.10 (relating to Enforcement). Such violation may also be subject to civil penalties and injunction.

Applicant Signature

Applicant Signature

5/8/23
Date

THE STATE OF § Texas

County of § Dallas

BEFORE ME, the undersigned authority, on this day personally appeared known to me to be the person whose name is subscribed to the foregoing instrument and acknowledged to me that (s)he executed same for the purpose and consideration therein expressed.

GIVEN under my hand and seal of office on this 8th day of May, 2023

ELIDA R. CERNO
My Notary ID # 11262457
Expires July 22, 2026

Elida R. Cerno
NOTARY PUBLIC

Elida R. Cerno
Typed or Printed Name of Notary

MY COMMISSION EXPIRES: July 22, 2026

Owner Authorization Form

for Required Signature for submitting and signing an application for an Edwards Aquifer Protection Plan (Plan) and conducting regulated activities in accordance with an approved Plan.

Texas Commission on Environmental Quality
Edwards Aquifer Protection Program
Relating to the Edwards Aquifer Rules of
Title 30 of the Texas Administrative Code
(30 TAC), Chapter 213
Effective June 1, 1999

Land Owner Authorization

I, Miles Terry of DRI JS Georgetown I LLC

Land Owner Name (Individual) | Firm (applicable to Legal Entities)

am the Owner of Record or Title Holder of the property located at:

Tracts R629215

(Legal description of the property referenced in the application)

and being duly authorized under 30 TAC § 213.4(c)(2) and § 213.4(d)(1) or § 213.23(c)(2) and § 213.23(d) to submit and sign an application for a Plan, do hereby authorize:

Miles Terry / JSACQ Georgetown LP

(Applicant Name / Plan Holder (Legal Entity or Individual))

to conduct:

Sanitary Sewer Collection System Permitting; Design and Construction of Public Utilities to be deeded to the City of Georgetown

(Description of the proposed regulated activities)

on the property described above or at:

(If applicable to a precise location for the authorized regulated activities)

Land Owner Acknowledgement

I, Miles Terry of DRI JS Georgetown I LLC

Land Owner Name (Individual) | Firm (applicable to Legal Entities)

understand that while JSACQ Georgetown LP

Applicant Name / Plan Holder (Legal Entity or Individual)

is responsible for compliance with the approved or conditionally approved Plan and any special conditions of the approved Plan through all phases of Plan implementation,

I, Miles Terry of DRI JS Georgetown I LLC

Land Owner Name (Individual) Firm (applicable to Legal Entities)

as Owner of Record or Title Holder of the property described above, I am ultimately responsible for ensuring that compliance with the approved or conditionally approved Plan and any special conditions of the approved Plan, through all phases of Plan implementation, is achieved even if the responsibility for compliance and the right to possess and control of the property referenced in the application has been contractually assumed by another legal entity.

I, Miles Terry of DRI JS Georgetown I LLC

Land Owner Name (Individual) Firm (applicable to Legal Entities)

further understand that any failure to comply with any condition of the Executive Director's approval is a violation and is subject to administrative rule or orders and penalties as provided under 30 TAC § 213.10 (relating to Enforcement). Such violation may also be subject to civil penalties and injunction.

Land Owner Signature

Land Owner Signature

5/8/23

Date

THE STATE OF § _____

County of § _____

BEFORE ME, the undersigned authority, on this day personally appeared known to me to be the person whose name is subscribed to the foregoing instrument and acknowledged to me that (s)he executed same for the purpose and consideration therein expressed.

GIVEN under my hand and seal of office on this 8th day of May, 2023

NOTARY PUBLIC

ELIDA R. CERNO
My Notary ID # 11262457
Expires July 22, 2026

Elida R. Cerno

Typed or Printed Name of Notary

MY COMMISSION EXPIRES: July 22, 2026

Attached: (Mark all that apply)

- ☐ Lease Agreement
- ☐ Signed Contract
- ☐ Deed Recorded Easement
- ☐ Other legally binding document

Applicant Acknowledgement

I, Miles Terry of JSACQ Georgetown LP
Applicant Name (Individual) Firm (applicable to Legal Entities)

acknowledge that JSACQ Georgetown LP
Land Owner Name (Legal Entity or Individual)

has provided JSACQ Georgetown LP
Applicant Name (Legal Entity or Individual)

with the right to possess and control the property referenced in the Edwards Aquifer Protection Plan (Plan).

I understand that JSACQ Georgetown LP
Applicant Name (Legal Entity or Individual)

is responsible, contractually or not, for compliance with the approved or conditionally approved Plan and any special conditions of the approved Plan through all phases of Plan implementation. I further understand that failure to comply with any condition of the Executive Director's approval is a violation and is subject to administrative rule or orders and penalties as provided under § 213.10 (relating to Enforcement). Such violation may also be subject to civil penalties and injunction.

Applicant Signature

Applicant Signature

5/8/23
Date

THE STATE OF § Texas

County of § Dallas

BEFORE ME, the undersigned authority, on this day personally appeared known to me to be the person whose name is subscribed to the foregoing instrument and acknowledged to me that (s)he executed same for the purpose and consideration therein expressed.

GIVEN under my hand and seal of office on this 8th day of May, 2023

ELIDA R. CERNO
My Notary ID # 11262457
Expires July 22, 2026

Elida R. Cerno
NOTARY PUBLIC

Elida R. Cerno
Typed or Printed Name of Notary

MY COMMISSION EXPIRES: July 22, 2026

Owner Authorization Form

for Required Signature for submitting and signing an application for an Edwards Aquifer Protection Plan (Plan) and conducting regulated activities in accordance with an approved Plan.

Texas Commission on Environmental Quality
Edwards Aquifer Protection Program
Relating to the Edwards Aquifer Rules of
Title 30 of the Texas Administrative Code
(30 TAC), Chapter 213
Effective June 1, 1999

Land Owner Authorization

I, Miles Terry (Land Owner Name (Individual)) of DRI JS Georgetown I LLC (Firm (applicable to Legal Entities))

am the Owner of Record or Title Holder of the property located at:

Tracts R629214

(Legal description of the property referenced in the application)

and being duly authorized under 30 TAC § 213.4(c)(2) and § 213.4(d)(1) or § 213.23(c)(2) and § 213.23(d) to submit and sign an application for a Plan, do hereby authorize:

Miles Terry / JSACQ Georgetown LP

(Applicant Name / Plan Holder (Legal Entity or Individual))

to conduct:

Sanitary Sewer Collection System Permitting; Design and Construction of Public Utilities to be deeded to the City of Georgetown

(Description of the proposed regulated activities)

on the property described above or at:

(If applicable to a precise location for the authorized regulated activities)

Land Owner Acknowledgement

I, Miles Terry (Land Owner Name (Individual)) of DRI JS Georgetown I LLC (Firm (applicable to Legal Entities))

understand that while JSACQ Georgetown LP (Applicant Name / Plan Holder (Legal Entity or Individual))

is responsible for compliance with the approved or conditionally approved Plan and any special conditions of the approved Plan through all phases of Plan implementation,

I, Miles Terry of DRI JS Georgetown I LLC

Land Owner Name (Individual) Firm (applicable to Legal Entities)

as Owner of Record or Title Holder of the property described above, I am ultimately responsible for ensuring that compliance with the approved or conditionally approved Plan and any special conditions of the approved Plan, through all phases of Plan implementation, is achieved even if the responsibility for compliance and the right to possess and control of the property referenced in the application has been contractually assumed by another legal entity.

I, Miles Terry of DRI JS Georgetown I LLC

Land Owner Name (Individual) Firm (applicable to Legal Entities)

further understand that any failure to comply with any condition of the Executive Director's approval is a violation and is subject to administrative rule or orders and penalties as provided under 30 TAC § 213.10 (relating to Enforcement). Such violation may also be subject to civil penalties and injunction.

Land Owner Signature

Land Owner Signature

5/8/23

Date

THE STATE OF § _____

County of § _____

BEFORE ME, the undersigned authority, on this day personally appeared known to me to be the person whose name is subscribed to the foregoing instrument and acknowledged to me that (s)he executed same for the purpose and consideration therein expressed.

GIVEN under my hand and seal of office on this 8th day of May, 2023

NOTARY PUBLIC

ELIDA R. CERNO
My Notary ID # 11262457
Expires July 22, 2026

Elida R. Cerno

Typed or Printed Name of Notary

MY COMMISSION EXPIRES: July 22, 2026

Attached: (Mark all that apply)

- ☐ Lease Agreement
- ☐ Signed Contract
- ☐ Deed Recorded Easement
- ☐ Other legally binding document

Applicant Acknowledgement

I, Miles Terry of JSACQ Georgetown LP
Applicant Name (Individual) Firm (applicable to Legal Entities)

acknowledge that JSACQ Georgetown LP
Land Owner Name (Legal Entity or Individual)

has provided JSACQ Georgetown LP
Applicant Name (Legal Entity or Individual)

with the right to possess and control the property referenced in the Edwards Aquifer Protection Plan (Plan).

I understand that JSACQ Georgetown LP
Applicant Name (Legal Entity or Individual)

is responsible, contractually or not, for compliance with the approved or conditionally approved Plan and any special conditions of the approved Plan through all phases of Plan implementation. I further understand that failure to comply with any condition of the Executive Director's approval is a violation and is subject to administrative rule or orders and penalties as provided under § 213.10 (relating to Enforcement). Such violation may also be subject to civil penalties and injunction.

Applicant Signature

Applicant Signature

5/8/23
Date

THE STATE OF § Texas

County of § Dallas

BEFORE ME, the undersigned authority, on this day personally appeared known to me to be the person whose name is subscribed to the foregoing instrument and acknowledged to me that (s)he executed same for the purpose and consideration therein expressed.

GIVEN under my hand and seal of office on this 8th day of May, 2023

ELIDA R. CERNO
My Notary ID # 11262457
Expires July 22, 2026

Elida R. Cerno
NOTARY PUBLIC

Elida R. Cerno
Typed or Printed Name of Notary

MY COMMISSION EXPIRES: July 22, 2026

Owner Authorization Form

for Required Signature for submitting and signing an application for an Edwards Aquifer Protection Plan (Plan) and conducting regulated activities in accordance with an approved Plan.

Texas Commission on Environmental Quality
Edwards Aquifer Protection Program
Relating to the Edwards Aquifer Rules of
Title 30 of the Texas Administrative Code
(30 TAC), Chapter 213
Effective June 1, 1999

Land Owner Authorization

I, Miles Terry of DRI JS Georgetown II LLC

Land Owner Name (Individual) | Firm (applicable to Legal Entities)

am the Owner of Record or Title Holder of the property located at:

Tracts R647046

(Legal description of the property referenced in the application)

and being duly authorized under 30 TAC § 213.4(c)(2) and § 213.4(d)(1) or § 213.23(c)(2) and § 213.23(d) to submit and sign an application for a Plan, do hereby authorize:

Miles Terry / JSACQ Georgetown LP

(Applicant Name / Plan Holder (Legal Entity or Individual))

to conduct:

Sanitary Sewer Collection System Permitting; Design and Construction of Public Utilities to be deeded to the City of Georgetown

(Description of the proposed regulated activities)

on the property described above or at:

(If applicable to a precise location for the authorized regulated activities)

Land Owner Acknowledgement

I, Miles Terry of DRI JS Georgetown II LLC

Land Owner Name (Individual) | Firm (applicable to Legal Entities)

understand that while JSACQ Georgetown LP

Applicant Name / Plan Holder (Legal Entity or Individual)

is responsible for compliance with the approved or conditionally approved Plan and any special conditions of the approved Plan through all phases of Plan implementation,

I, Miles Terry of DRI JS Georgetown II LLC

Land Owner Name (Individual) Firm (applicable to Legal Entities)

as Owner of Record or Title Holder of the property described above, I am ultimately responsible for ensuring that compliance with the approved or conditionally approved Plan and any special conditions of the approved Plan, through all phases of Plan implementation, is achieved even if the responsibility for compliance and the right to possess and control of the property referenced in the application has been contractually assumed by another legal entity.

I, Miles Terry of DRI JS Georgetown II LLC

Land Owner Name (Individual) Firm (applicable to Legal Entities)

further understand that any failure to comply with any condition of the Executive Director's approval is a violation and is subject to administrative rule or orders and penalties as provided under 30 TAC § 213.10 (relating to Enforcement). Such violation may also be subject to civil penalties and injunction.

Land Owner Signature

Land Owner Signature 5/8/23 Date

THE STATE OF § _____

County of § _____

BEFORE ME, the undersigned authority, on this day personally appeared known to me to be the person whose name is subscribed to the foregoing instrument and acknowledged to me that (s)he executed same for the purpose and consideration therein expressed.

GIVEN under my hand and seal of office on this 8th day of May, 2023

NOTARY PUBLIC

ELIDA R. CERNO
My Notary ID # 11262457
Expires July 22, 2026

Elida R. Cerno

Typed or Printed Name of Notary

MY COMMISSION EXPIRES: July 22, 2026

Attached: (Mark all that apply)

- ☐ Lease Agreement
- ☐ Signed Contract
- ☐ Deed Recorded Easement
- ☐ Other legally binding document

Applicant Acknowledgement

I, Miles Terry of JSACQ Georgetown LP
Applicant Name (Individual) Firm (applicable to Legal Entities)

acknowledge that JSACQ Georgetown LP
Land Owner Name (Legal Entity or Individual)

has provided JSACQ Georgetown LP
Applicant Name (Legal Entity or Individual)

with the right to possess and control the property referenced in the Edwards Aquifer Protection Plan (Plan).

I understand that JSACQ Georgetown LP
Applicant Name (Legal Entity or Individual)

is responsible, contractually or not, for compliance with the approved or conditionally approved Plan and any special conditions of the approved Plan through all phases of Plan implementation. I further understand that failure to comply with any condition of the Executive Director's approval is a violation and is subject to administrative rule or orders and penalties as provided under § 213.10 (relating to Enforcement). Such violation may also be subject to civil penalties and injunction.

Applicant Signature

Applicant Signature

5/8/23
Date

THE STATE OF § Texas

County of § Dallas

BEFORE ME, the undersigned authority, on this day personally appeared known to me to be the person whose name is subscribed to the foregoing instrument and acknowledged to me that (s)he executed same for the purpose and consideration therein expressed.

GIVEN under my hand and seal of office on this 8th day of May, 2023

ELIDA R. CERNO
My Notary ID # 11262457
Expires July 22, 2026

Elida R. Cerno
NOTARY PUBLIC

Elida R. Cerno
Typed or Printed Name of Notary

MY COMMISSION EXPIRES: July 22, 2026

TCEQ Use Only

TCEQ Core Data Form

For detailed instructions regarding completion of this form, please read the Core Data Form Instructions or call 512-239-5175.

SECTION I: General Information

1. Reason for Submission (*If other is checked please describe in space provided.*)

☒ New Permit, Registration or Authorization (*Core Data Form should be submitted with the program application.*)

☐ Renewal (*Core Data Form should be submitted with the renewal form*) ☐ Other

2. Customer Reference Number *(if issued)*	Follow this link to search for CN or RN numbers in Central Registry**	3. Regulated Entity Reference Number *(if issued)*
CN		RN

SECTION II: Customer Information

4. General Customer Information	5. Effective Date for Customer Information Updates (mm/dd/yyyy)	12/8/2023

☒ New Customer ☐ Update to Customer Information ☐ Change in Regulated Entity Ownership

☐ Change in Legal Name (Verifiable with the Texas Secretary of State or Texas Comptroller of Public Accounts)

The Customer Name submitted here may be updated automatically based on what is current and active with the Texas Secretary of State (SOS) or Texas Comptroller of Public Accounts (CPA).

6. Customer Legal Name (*If an individual, print last name first: eg: Doe, John*)	*If new Customer, enter previous Customer below:*
JSACQ Georgetown LP	

7. TX SOS/CPA Filing Number	8. TX State Tax ID (11 digits)	9. Federal Tax ID (9 digits)	10. DUNS Number *(if applicable)*

11. Type of Customer: ☒ Corporation ☐ Individual Partnership: ☐ General ☐ Limited

Government: ☐ City ☐ County ☐ Federal ☐ State ☐ Other ☐ Sole Proprietorship ☐ Other:

12. Number of Employees
☐ 0-20 ☐ 21-100 ☐ 101-250 ☐ 251-500 ☐ 501 and higher

13. Independently Owned and Operated?
☐ Yes ☐ No

14. Customer Role (Proposed or Actual) – *as it relates to the Regulated Entity listed on this form. Please check one of the following*

☐ Owner ☐ Operator ☐ Owner & Operator
☐ Occupational Licensee ☒ Responsible Party ☐ Voluntary Cleanup Applicant ☐ Other:

15. Mailing Address:	4890 Alpha Road, Suite 100						
	City	Dallas	State	TX	ZIP	78759	ZIP + 4	

16. Country Mailing Information *(if outside USA)*	17. E-Mail Address *(if applicable)*
	mterry@jacksonshaw.com

18. Telephone Number	19. Extension or Code	20. Fax Number *(if applicable)*
(972) 628-7400		( ) -

SECTION III: Regulated Entity Information

21. General Regulated Entity Information (*If 'New Regulated Entity" is selected below this form should be accompanied by a permit application*)

☒ New Regulated Entity ☐ Update to Regulated Entity Name ☐ Update to Regulated Entity Information

The Regulated Entity Name submitted may be updated in order to meet TCEQ Agency Data Standards (removal of organizational endings such as Inc, LP, or LLC).

22. Regulated Entity Name (*Enter name of the site where the regulated action is taking place.*)

JSACQ Georgetown LP

23. Street Address of the Regulated Entity: *(No PO Boxes)*							
	City		**State**		**ZIP**		**ZIP + 4**
24. County	Williamson						

Enter Physical Location Description if no street address is provided.

25. Description to Physical Location:	A 13,200 LF Sanitary Sewer near the interseption of I 35 and Market Street in Georgetown Texas.

26. Nearest City	**State**	**Nearest ZIP Code**
Georgetown	TX	78633

27. Latitude (N) In Decimal:			**28. Longitude (W) In Decimal:**		
Degrees	Minutes	Seconds	Degrees	Minutes	Seconds

29. Primary SIC Code (4 digits)	**30. Secondary SIC Code** (4 digits)	**31. Primary NAICS Code** (5 or 6 digits)	**32. Secondary NAICS Code** (5 or 6 digits)

33. What is the Primary Business of this entity? *(Do not repeat the SIC or NAICS description.)*

Industrial

34. Mailing Address:							
	City		**State**		**ZIP**		**ZIP + 4**
35. E-Mail Address:							

36. Telephone Number	**37. Extension or Code**	**38. Fax Number** *(if applicable)*
( ) -		( ) -

39. TCEQ Programs and ID Numbers Check all Programs and write in the permits/registration numbers that will be affected by the updates submitted on this form. See the Core Data Form instructions for additional guidance.

☐ Dam Safety	☐ Districts	☒ Edwards Aquifer	☐ Emissions Inventory Air	☐ Industrial Hazardous Waste
☐ Municipal Solid Waste	☐ New Source Review Air	☐ OSSF	☐ Petroleum Storage Tank	☐ PWS
☐ Sludge	☐ Storm Water	☐ Title V Air	☐ Tires	☐ Used Oil
☐ Voluntary Cleanup	☒ Waste Water	☐ Wastewater Agriculture	☐ Water Rights	☐ Other:

SECTION IV: Preparer Information

40. Name:	Jacob W. Valentien. P.E.	**41. Title:**	

42. Telephone Number	**43. Ext./Code**	**44. Fax Number**	**45. E-Mail Address**
(512) 485-0831		( ) -	jacob.valentien@westwoodps.com

SECTION V: Authorized Signature

46. By my signature below, I certify, to the best of my knowledge, that the information provided in this form is true and complete, and that I have signature authority to submit this form on behalf of the entity specified in Section II, Field 6 and/or as required for the updates to the ID numbers identified in field 39.

Company:	Westwood Professional Services	**Job Title:**	Senior Project Manager
Name *(In Print):*	Jacob Valentien	**Phone:**	(512) 485-0831

Signature:		Date:	4-19-2024

Application Fee Form

Texas Commission on Environmental Quality
Name of Proposed Regulated Entity: Dry Berry Creek Interceptor
Regulated Entity Location: 4805 South IH 35, Georgetown, Texas 78633, USA
Name of Customer: JSACQ Georgetown LP
Contact Person: Jacob W. Valentien, P.E. Phone: 512-485-0831
Customer Reference Number (if issued):CN _____
Regulated Entity Reference Number (if issued):RN _____

Austin Regional Office (3373)

☐ Hays ☐ Travis ☒ Williamson

San Antonio Regional Office (3362)

☐ Bexar ☐ Medina ☐ Uvalde
☐ Comal ☐ Kinney

Application fees must be paid by check, certified check, or money order, payable to the **Texas Commission on Environmental Quality**. Your canceled check will serve as your receipt. **This form must be submitted with your fee payment**. This payment is being submitted to:

☒ Austin Regional Office
☐ Mailed to: TCEQ - Cashier
Revenues Section
Mail Code 214
P.O. Box 13088
Austin, TX 78711-3088

☐ San Antonio Regional Office
☐ Overnight Delivery to: TCEQ - Cashier
12100 Park 35 Circle
Building A, 3rd Floor
Austin, TX 78753
(512)239-0357

Site Location (Check All That Apply):

☒ Recharge Zone ☐ Contributing Zone ☐ Transition Zone

Type of Plan	***Size***	***Fee Due***
Water Pollution Abatement Plan, Contributing Zone Plan: One Single Family Residential Dwelling	Acres	$
Water Pollution Abatement Plan, Contributing Zone Plan: Multiple Single Family Residential and Parks	Acres	$
Water Pollution Abatement Plan, Contributing Zone Plan: Non-residential	Acres	$
Sewage Collection System	13,406 L.F.	$ 6,500.00
Lift Stations without sewer lines	Acres	$
Underground or Aboveground Storage Tank Facility	Tanks	$
Piping System(s)(only)	Each	$
Exception	Each	$
Extension of Time	Each	$

Signature: _____

Date: 12/05/2023

Application Fee Schedule

Texas Commission on Environmental Quality
Edwards Aquifer Protection Program 30 TAC Chapter 213 (effective 05/01/2008)

Water Pollution Abatement Plans and Modifications

Contributing Zone Plans and Modifications

Project	*Project Area in Acres*	*Fee*
One Single Family Residential Dwelling	< 5	$650
Multiple Single Family Residential and Parks	< 5 5 < 10 10 < 40 40 < 100 100 < 500 ≥ 500	$1,500 $3,000 $4,000 $6,500 $8,000 $10,000
Non-residential (Commercial, industrial, institutional, multi-family residential, schools, and other sites where regulated activities will occur)	< 1 1 < 5 5 < 10 10 < 40 40 < 100 ≥ 100	$3,000 $4,000 $5,000 $6,500 $8,000 $10,000

Organized Sewage Collection Systems and Modifications

Project	*Cost per Linear Foot*	*Minimum Fee-Maximum Fee*
Sewage Collection Systems	$0.50	$650 - $6,500

Underground and Aboveground Storage Tank System Facility Plans and Modifications

Project	*Cost per Tank or Piping System*	*Minimum Fee-Maximum Fee*
Underground and Aboveground Storage Tank Facility	$650	$650 - $6,500

Exception Requests

Project	*Fee*
Exception Request	$500

Extension of Time Requests

Project	***Fee***
Extension of Time Request	$150