Organized Sewage Collection System Plan

South Lake to South Fork Wastewater Improvements
Cedar Breaks and D B Wood Lift Station
Georgetown, TX

Texas Commission on Environmental Quality

Edwards Aquifer Application Cover Page

Our Review of Your Application

The Edwards Aquifer Program staff conducts an administrative and technical review of all applications. The turnaround time for administrative review can be up to 30 days as outlined in 30 TAC 213.4(e). Generally administrative completeness is determined during the intake meeting or within a few days of receipt. The turnaround time for technical review of an administratively complete Edwards Aquifer application is 90 days as outlined in 30 TAC 213.4(e). Please know that the review and approval time is directly impacted by the quality and completeness of the initial application that is received. In order to conduct a timely review, it is imperative that the information provided in an Edwards Aquifer application include final plans, be accurate, complete, and in compliance with 30 TAC 213.

Administrative Review

1. Edwards Aquifer applications must be deemed administratively complete before a technical review can begin. To be considered administratively complete, the application must contain completed forms and attachments, provide the requested information, and meet all the site plan requirements. The submitted application and plan sheets should be final plans. Please submit one full-size set of plan sheets with the original application, and half-size sets with the additional copies.

   To ensure that all applicable documents are included in the application, the program has developed tools to guide you and web pages to provide all forms, checklists, and guidance. Please visit the below website for assistance: http://www.tceq.texas.gov/field/eapp.

2. This Edwards Aquifer Application Cover Page form (certified by the applicant or agent) must be included in the application and brought to the administrative review meeting.

3. Administrative reviews are scheduled with program staff who will conduct the review. Applicants or their authorized agent should call the appropriate regional office, according to the county in which the project is located, to schedule a review. The average meeting time is one hour.

4. In the meeting, the application is examined for administrative completeness. Deficiencies will be noted by staff and emailed or faxed to the applicant and authorized agent at the end of the meeting, or shortly after. Administrative deficiencies will cause the application to be deemed incomplete and returned.

   An appointment should be made to resubmit the application. The application is re-examined to ensure all deficiencies are resolved. The application will only be deemed administratively complete when all administrative deficiencies are addressed.

5. If an application is received by mail, courier service, or otherwise submitted without a review meeting, the administrative review will be conducted within 30 days. The applicant and agent will be contacted with the results of the administrative review. If the application is found to be administratively incomplete, it can be retrieved from the regional office or returned by regular mail. If returned by mail, the regional office may require arrangements for return shipping.

6. If the geologic assessment was completed before October 1, 2004 and the site contains "possibly sensitive" features, the assessment must be updated in accordance with the *Instructions to Geologists* (TCEQ-0585 Instructions).

Technical Review

1. When an application is deemed administratively complete, the technical review period begins. The regional office will distribute copies of the application to the identified affected city, county, and groundwater conservation district whose jurisdiction includes the subject site. These entities and the public have 30 days to provide comments on the application to the regional office. All comments received are reviewed by TCEQ.

2. A site assessment is usually conducted as part of the technical review, to evaluate the geologic assessment and observe existing site conditions. The site must be accessible to our staff. The site boundaries should be

clearly marked, features identified in the geologic assessment should be flagged, roadways marked and the alignment of the Sewage Collection System and manholes should be staked at the time the application is submitted. If the site is not marked the application may be returned.

3. We evaluate the application for technical completeness and contact the applicant and agent via Notice of Deficiency (NOD) to request additional information and identify technical deficiencies. There are two deficiency response periods available to the applicant. There are 14 days to resolve deficiencies noted in the first NOD. If a second NOD is issued, there is an additional 14 days to resolve deficiencies. If the response to the second notice is not received, is incomplete or inadequate, or provides new information that is incomplete or inadequate, the application must be withdrawn or will be denied. Please note that because the technical review is underway, whether the application is withdrawn or denied **the application fee will be forfeited**.

4. The program has 90 calendar days to complete the technical review of the application. If the application is technically adequate, such that it complies with the Edwards Aquifer rules, and is protective of the Edwards Aquifer during and after construction, an approval letter will be issued. Construction or other regulated activity may not begin until an approval is issued.

Mid-Review Modifications

It is important to have final site plans prior to beginning the permitting process with TCEQ to avoid delays.

Occasionally, circumstances arise where you may have significant design and/or site plan changes after your Edwards Aquifer application has been deemed administratively complete by TCEQ. This is considered a "Mid-Review Modification". Mid-Review Modifications may require redistribution of an application that includes the proposed modifications for public comment.

If you are proposing a Mid-Review Modification, two options are available:

- If the technical review has begun your application can be denied/withdrawn, your fees will be forfeited, and the plan will have to be resubmitted.
- TCEQ can continue the technical review of the application as it was submitted, and a modification application can be submitted at a later time.

If the application is denied/withdrawn, the resubmitted application will be subject to the administrative and technical review processes and will be treated as a new application. The application will be redistributed to the affected jurisdictions.

Please contact the regional office if you have questions. If your project is located in Williamson, Travis, or Hays County, contact TCEQ's Austin Regional Office at 512-339-2929. If your project is in Comal, Bexar, Medina, Uvalde, or Kinney County, contact TCEQ's San Antonio Regional Office at 210-490-3096

Please fill out all required fields below and submit with your application.

1. Regulated Entity Name: South Lake to South Fork Wastewater Improvements						**2. Regulated Entity No.:**			
3. Customer Name: City of Georgetown						**4. Customer No.: 600412043**			
5. Project Type: **(Please circle/check one)**	New		Modification			Extension		Exception	
6. Plan Type: **(Please circle/check one)**	WPAP	CZP	SCS	UST	AST	EXP	EXT	Technical Clarification	Optional Enhanced Measures
7. Land Use: **(Please circle/check one)**	Residential		Non-residential				**8. Site (acres):**		
9. Application Fee:	$6,500		**10. Permanent BMP(s):**					Mulch Sock, Silt Fence, Rock Berm	
11. SCS (Linear Ft.):	25,969		**12. AST/UST (No. Tanks):**						
13. County:	Williamson		**14. Watershed:**					San Gabriel	

Application Distribution

Instructions: Use the table below to determine the number of applications required. One original and one copy of the application, plus additional copies (as needed) for each affected incorporated city, county, and groundwater conservation district are required. Linear projects or large projects, which cross into multiple jurisdictions, can require additional copies. Refer to the "Texas Groundwater Conservation Districts within the EAPP Boundaries" map found at:

http://www.tceq.texas.gov/assets/public/compliance/field_ops/eapp/EAPP%20GWCD%20map.pdf

For more detailed boundaries, please contact the conservation district directly.

Austin Region			
County:	**Hays**	**Travis**	**Williamson**
Original (1 req.)	__	__	_1_
Region (1 req.)	__	__	_1_
County(ies)	__	__	_1_
Groundwater Conservation District(s)	__Edwards Aquifer Authority __Barton Springs/ Edwards Aquifer __Hays Trinity __Plum Creek	__Barton Springs/ Edwards Aquifer	NA
City(ies) Jurisdiction	__Austin __Buda __Dripping Springs __Kyle __Mountain City __San Marcos __Wimberley __Woodcreek	__Austin __Bee Cave __Pflugerville __Rollingwood __Round Rock __Sunset Valley __West Lake Hills	__Austin __Cedar Park __Florence _1_Georgetown __Jerrell __Leander __Liberty Hill __Pflugerville __Round Rock

San Antonio Region					
County:	**Bexar**	**Comal**	**Kinney**	**Medina**	**Uvalde**
Original (1 req.)	__	__	__	__	__
Region (1 req.)	__	__	__	__	__
County(ies)	__	__	__	__	__
Groundwater Conservation District(s)	__ Edwards Aquifer Authority __Trinity-Glen Rose	__Edwards Aquifer Authority	__Kinney	__EAA __Medina	__EAA __Uvalde
City(ies) Jurisdiction	__Castle Hills __Fair Oaks Ranch __Helotes __Hill Country Village __Hollywood Park __San Antonio (SAWS) __Shavano Park	__Bulverde __Fair Oaks Ranch __Garden Ridge __New Braunfels __Schertz	NA	__San Antonio ETJ (SAWS)	NA

I certify that to the best of my knowledge, that the application is complete and accurate. This application is hereby submitted to TCEQ for administrative review and technical review. Gerald S. Furrier, PE, PMP, BCEE
Print Name of Customer/Authorized Agent
06/13/24
Signature of Customer/Authorized Agent Date

FOR TCEQ INTERNAL USE ONLY			
Date(s)Reviewed:		Date Administratively Complete:	
Received From:		Correct Number of Copies:	
Received By:		Distribution Date:	
EAPP File Number:		Complex:	
Admin. Review(s) (No.):		No. AR Rounds:	
Delinquent Fees (Y/N):		Review Time Spent:	
Lat./Long. Verified:		SOS Customer Verification:	
Agent Authorization Complete/Notarized (Y/N):		Fee Check:	Payable to TCEQ (Y/N):
Core Data Form Complete (Y/N):			Signed (Y/N):
Core Data Form Incomplete Nos.:			Less than 90 days old (Y/N):

General Information Form

Texas Commission on Environmental Quality

For Regulated Activities on the Edwards Aquifer Recharge and Transition Zones and Relating to 30 TAC §213.4(b) & §213.5(b)(2)(A), (B) Effective June 1, 1999

To ensure that the application is administratively complete, confirm that all fields in the form are complete, verify that all requested information is provided, consistently reference the same site and contact person in all forms in the application, and ensure forms are signed by the appropriate party.

Note: Including all the information requested in the form and attachments contributes to more streamlined technical reviews.

Signature

To the best of my knowledge, the responses to this form accurately reflect all information requested concerning the proposed regulated activities and methods to protect the Edwards Aquifer. This **General Information Form** is hereby submitted for TCEQ review. The application was prepared by:

Print Name of Customer/Agent: Gerald S. Furrier

Date: 06/13/24

Signature of Customer/Agent:

Project Information

1. Regulated Entity Name: South Lake to South Fork Wastewater Improvements
2. County: Williamson
3. Stream Basin: San Gabriel River
4. Groundwater Conservation District (If applicable) N/A
5. Edwards Aquifer Zone:

   ☒ Recharge Zone
   ☐ Transition Zone

6. Plan Type:

   ☐ WPAP
   ☒ SCS
   ☐ Modification
   ☐ AST
   ☐ UST
   ☐ Exception Request

7. Customer (Applicant):

Contact Person: Chris Pousson
Entity: City of Georgetown
Mailing Address: 300-1 Industrial Ave
City, State: Georgetown, Texas Zip: 78626
Telephone: (512) 930-8162 FAX: (512) 930-3559
Email Address: chris.pousson@georgetown.org

8. Agent/Representative (If any):

Contact Person: Gerald S. Furrier
Entity: CDM Smith, Inc.
Mailing Address: 8310-1 N Capital of Texas Hwy, Suite 250
City, State: Austin, TX Zip: 78731
Telephone: (713)423-7337 FAX: _____
Email Address: furrierg@cdmsmith.com

9. Project Location:

☐ The project site is located inside the city limits of _____.
☒ The project site is located outside the city limits but inside the ETJ (extra-territorial jurisdiction) of Georgetown, TX.
☐ The project site is not located within any city's limits or ETJ.

10. ☒ The location of the project site is described below. The description provides sufficient detail and clarity so that the TCEQ's Regional staff can easily locate the project and site boundaries for a field investigation.

The interceptor starts along the South Fork San Gabriel River then goes along the South West Bypass crossing State Highway 29 towards D B Wood Rd. The interceptor runs west of D B Wood Rd along Cedar Breaks Rd where it ends at the South Lake WTP.

11. ☒ **Attachment A – Road Map**. A road map showing directions to and the location of the project site is attached. The project location and site boundaries are clearly shown on the map.

12. ☒ **Attachment B - USGS / Edwards Recharge Zone Map**. A copy of the official 7 ½ minute USGS Quadrangle Map (Scale: 1" = 2000') of the Edwards Recharge Zone is attached. The map(s) clearly show:

☒ Project site boundaries.
☒ USGS Quadrangle Name(s).
☒ Boundaries of the Recharge Zone (and Transition Zone, if applicable).
☒ Drainage path from the project site to the boundary of the Recharge Zone.

13. ☒ **The TCEQ must be able to inspect the project site or the application will be returned**. Sufficient survey staking is provided on the project to allow TCEQ regional staff to locate the boundaries and alignment of the regulated activities and the geologic or manmade features noted in the Geologic Assessment.

☒ Survey staking will be completed by this date: To be coordinated with TCEQ

14. ☒ **Attachment C – Project Description**. Attached at the end of this form is a detailed narrative description of the proposed project. The project description is consistent throughout the application and contains, at a minimum, the following details:

    ☒ Area of the site
    ☒ Offsite areas
    ☒ Impervious cover
    ☒ Permanent BMP(s)
    ☒ Proposed site use
    ☒ Site history
    ☒ Previous development
    ☒ Area(s) to be demolished

15. Existing project site conditions are noted below:

    ☐ Existing commercial site
    ☐ Existing industrial site
    ☐ Existing residential site
    ☐ Existing paved and/or unpaved roads
    ☐ Undeveloped (Cleared)
    ☒ Undeveloped (Undisturbed/Uncleared)
    ☐ Other: _____

Prohibited Activities

16. ☒ I am aware that the following activities are prohibited on the Recharge Zone and are not proposed for this project:

    (1) Waste disposal wells regulated under 30 TAC Chapter 331 of this title (relating to Underground Injection Control);

    (2) New feedlot/concentrated animal feeding operations, as defined in 30 TAC §213.3;

    (3) Land disposal of Class I wastes, as defined in 30 TAC §335.1;

    (4) The use of sewage holding tanks as parts of organized collection systems; and

    (5) New municipal solid waste landfill facilities required to meet and comply with Type I standards which are defined in §330.41(b), (c), and (d) of this title (relating to Types of Municipal Solid Waste Facilities).

    (6) New municipal and industrial wastewater discharges into or adjacent to water in the state that would create additional pollutant loading.

17. ☒ I am aware that the following activities are prohibited on the Transition Zone and are not proposed for this project:

    (1) Waste disposal wells regulated under 30 TAC Chapter 331 (relating to Underground Injection Control);

(2) Land disposal of Class I wastes, as defined in 30 TAC §335.1; and

(3) New municipal solid waste landfill facilities required to meet and comply with Type I standards which are defined in §330.41 (b), (c), and (d) of this title.

Administrative Information

18. The fee for the plan(s) is based on:

- ☐ For a Water Pollution Abatement Plan or Modification, the total acreage of the site where regulated activities will occur.
- ☒ For an Organized Sewage Collection System Plan or Modification, the total linear footage of all collection system lines.
- ☐ For a UST Facility Plan or Modification or an AST Facility Plan or Modification, the total number of tanks or piping systems.
- ☐ A request for an exception to any substantive portion of the regulations related to the protection of water quality.
- ☐ A request for an extension to a previously approved plan.

19. ☒ Application fees are due and payable at the time the application is filed. If the correct fee is not submitted, the TCEQ is not required to consider the application until the correct fee is submitted. Both the fee and the Edwards Aquifer Fee Form have been sent to the Commission's:

- ☐ TCEQ cashier
- ☒ Austin Regional Office (for projects in Hays, Travis, and Williamson Counties)
- ☐ San Antonio Regional Office (for projects in Bexar, Comal, Kinney, Medina, and Uvalde Counties)

20. ☒ Submit one (1) original and one (1) copy of the application, plus additional copies as needed for each affected incorporated city, groundwater conservation district, and county in which the project will be located. The TCEQ will distribute the additional copies to these jurisdictions. The copies must be submitted to the appropriate regional office.

21. ☒ No person shall commence any regulated activity until the Edwards Aquifer Protection Plan(s) for the activity has been filed with and approved by the Executive Director.

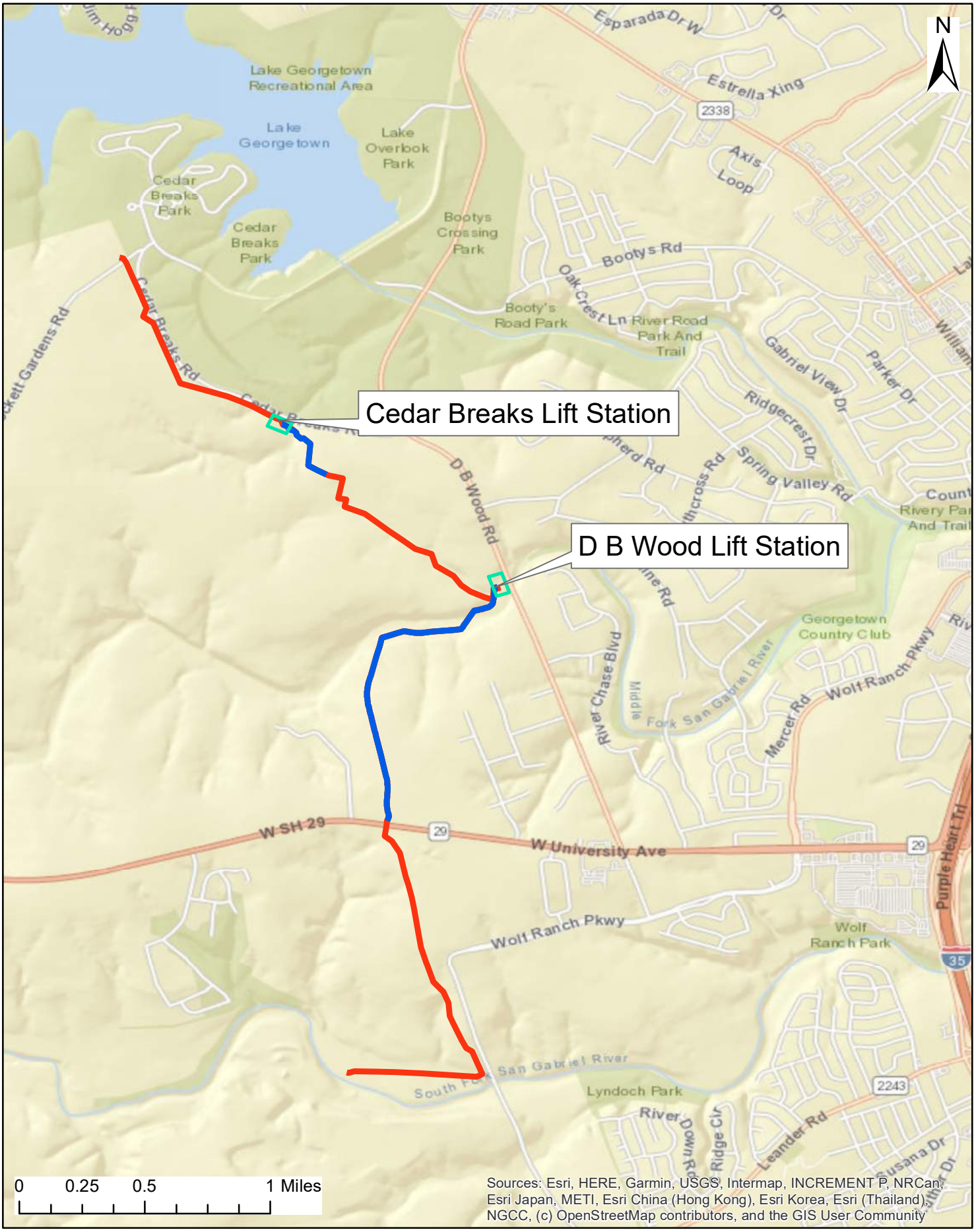

Legend

- Lift Station
- Force Main
- Gravity Main

Attachment A: Road Map
South Lake to South Fork Wastewater Improvements
Williamson County, Texas

CDM Smith

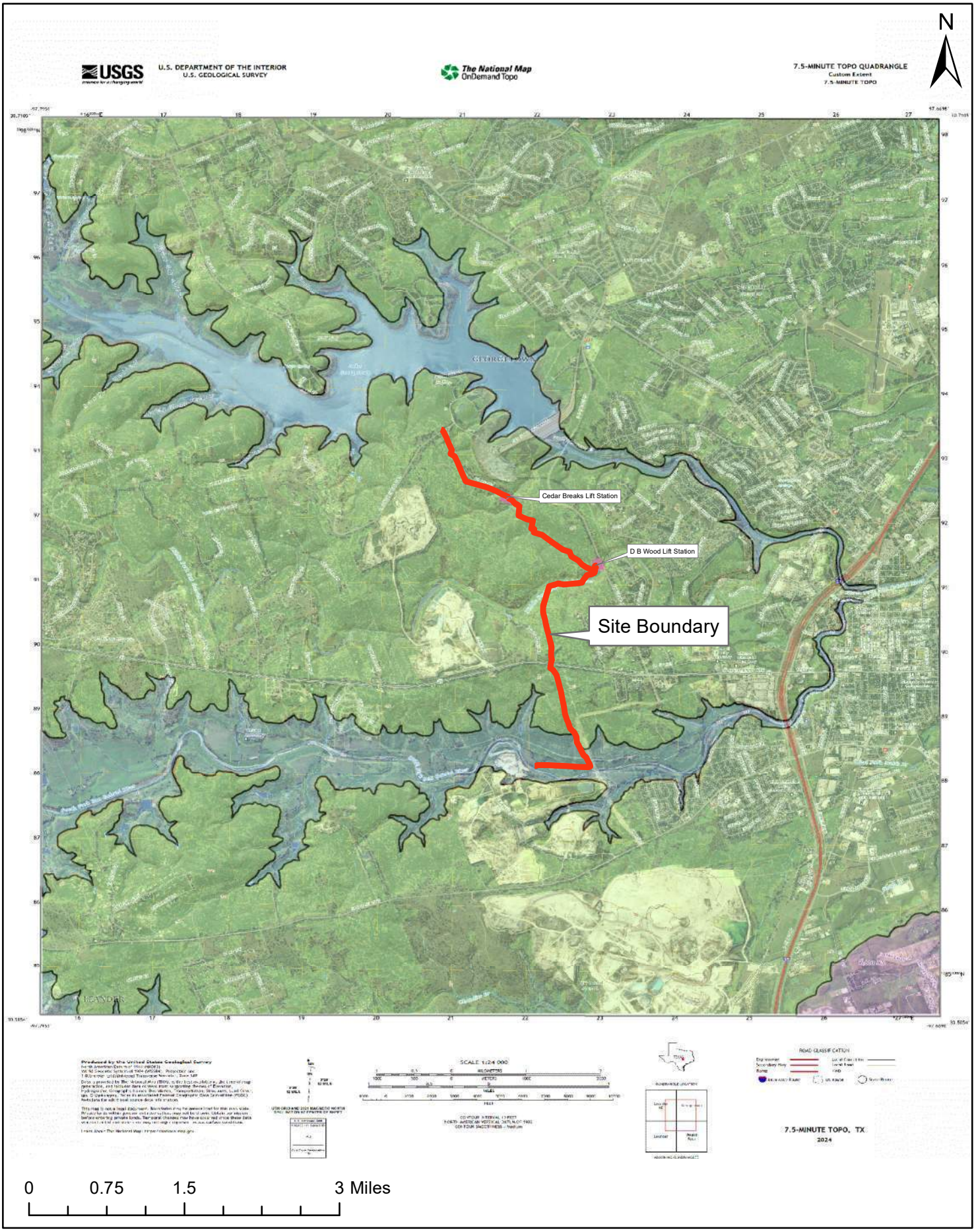

Legend

Edwards Aquifer

- Edwards Aquifer Contributing Zone
- Edwards Aquifer Recharge Zone
- Edwards Aquifer Transition Zone

Attachment B: Edwards Recharge Zone Map
South Lake to South Fork Wastewater Interceptor
Williamson County, Texas

CDM Smith

City of Georgetown

South Lake to South Fork Wastewater Improvements

Organized Sewage Collection System Plan

The project consists of the design and construction of approximately 18,476 linear feet of wastewater gravity main, 7,055 linear feet of force main, and two lift stations. The pipe diameter for this project consists of 8-inch, 12-inch, 15-inch, 18-inch, 24-inch, 30-inch, and 36-inch starting at the South Fork San Gabriel River going north to D B Wood Rd then ending along Cedar Breaks Rd at the South Lake Water Treatment Plant. The purpose of the project is to divert flow from the South Lake Water Treatment Plant to the South Fork Interceptor.

The flow from the proposed wastewater interceptor will be discharged into the existing wastewater interceptor located at the San Gabriel River, which ultimately runs to the San Gabriel Wastewater Treatment Plant. All proposed improvements are consistent with the Georgetown Utility Systems Wastewater Master Plan 2023 completed by CDM Smith in January 2023. A copy of the Master Plan is available upon request.

The site can be characterized as undeveloped with easements into privately owned areas during construction. The construction of the wastewater line has negligible increase in impervious cover since all the pipes will be placed underground. To protect areas from pollution and runoff, the site will be revegetated when all construction is complete.

Geologic Assessment

GEOLOGIC ASSESSMENT
FOR THE APPROXIMATELY 4.95-MILE
SOUTH LAKE TO SOUTH FORK
WASTEWATER IMPROVEMENTS PROJECT

Williamson County, Texas

June 2024

Submitted to:
CDM Smith, Inc.
11490 Westheimer Road
Suite 700
Houston, Texas 77077

Prepared by:
aci environmental consulting, LLC
1001 Mopac Circle
Austin, Texas 78746
TBPG Firm License No. 50713

aci project #: 36-21-200

Geologic Assessment

Texas Commission on Environmental Quality

For Regulated Activities on The Edwards Aquifer Recharge/transition Zones and Relating to 30 TAC §213.5(b)(3), Effective June 1, 1999

To ensure that the application is administratively complete, confirm that all fields in the form are complete, verify that all requested information is provided, consistently reference the same site and contact person in all forms in the application, and ensure forms are signed by the appropriate party.

Note: Including all the information requested in the form and attachments contributes to more streamlined technical reviews.

Signature

To the best of my knowledge, the responses to this form accurately reflect all information requested concerning the proposed regulated activities and methods to protect the Edwards Aquifer. My signature certifies that I am qualified as a geologist as defined by 30 TAC Chapter 213.

Print Name of Geologist: Mark T. Adams Telephone: (512) 347-9000

Date: 06/17/2024 Fax: (512) 306-0974

Representing: aci environmental consulting LLC TBPG License No. 50713 (Name of Company and TBPG or TBPE registration number)

Signature of Geologist:

STATE OF TEXAS
MARK T. ADAMS
GEOLOGY
No. 1835
LICENSED
PROFESSIONAL GEOSCIENTIST

Regulated Entity Name: City of Georgetown, Texas

Project Information

1. Date(s) Geologic Assessment was performed: 11/14/2022, 12/06/2022, 12/15/2022, 12/21/2022, 2/7/2023, 3/14/2023, 3/23/2023, 3/29/2023, 4/13/2023, 5/25/2023, 6/5/2023, 7/31/2023
2. Type of Project:

   ☒ WPAP ☒ AST
   ☒ SCS ☐ UST
3. Location of Project:

   ☒ Recharge Zone
   ☐ Transition Zone

☐ Contributing Zone within the Transition Zone

4. ☒ **Attachment A - Geologic Assessment Table**. Completed Geologic Assessment Table (Form TCEQ-0585-Table) is attached.

5. ☒ Soil cover on the project site is summarized in the table below and uses the SCS Hydrologic Soil Groups* (Urban Hydrology for Small Watersheds, Technical Release No. 55, Appendix A, Soil Conservation Service, 1986). If there is more than one soil type on the project site, show each soil type on the site Geologic Map or a separate soils map.

Table 1 - Soil Units, Infiltration Characteristics and Thickness

Soil Name	Group*	Thickness(feet)
	See Section 4.0 of Report.	

** Soil Group Definitions (Abbreviated)*

A. Soils having a high infiltration rate when thoroughly wetted.
B. Soils having a moderate infiltration rate when thoroughly wetted.
C. Soils having a slow infiltration rate when thoroughly wetted.
D. Soils having a very slow infiltration rate when thoroughly wetted.

6. ☒ **Attachment B – Stratigraphic Column**. A stratigraphic column showing formations, members, and thicknesses is attached. The outcropping unit, if present, should be at the top of the stratigraphic column. Otherwise, the uppermost unit should be at the top of the stratigraphic column.

7. ☒ **Attachment C – Site Geology**. A narrative description of the site specific geology including any features identified in the Geologic Assessment Table, a discussion of the potential for fluid movement to the Edwards Aquifer, stratigraphy, structure(s), and karst characteristics is attached.

8. ☒ **Attachment D – Site Geologic Map(s)**. The Site Geologic Map must be the same scale as the applicant's Site Plan. The minimum scale is 1”: 400'

   Applicant's Site Plan Scale: 1" = 400'
   Site Geologic Map Scale: 1" = 400'
   Site Soils Map Scale (if more than 1 soil type): 1" = 2,250'

9. Method of collecting positional data:

   ☒ Global Positioning System (GPS) technology.
   ☐ Other method(s). Please describe method of data collection: _____

10. ☒ The project site and boundaries are clearly shown and labeled on the Site Geologic Map.

11. ☒ Surface geologic units are shown and labeled on the Site Geologic Map.

12. ☒ Geologic or manmade features were discovered on the project site during the field investigation. They are shown and labeled on the Site Geologic Map and are described in the attached Geologic Assessment Table.

    ☐ Geologic or manmade features were not discovered on the project site during the field investigation.

13. ☒ The Recharge Zone boundary is shown and labeled, if appropriate.

14. All known wells (test holes, water, oil, unplugged, capped and/or abandoned, etc.): If applicable, the information must agree with Item No. 20 of the WPAP Application Section.

    ☒ There are 24 (#) wells present on the project site and the locations are shown and labeled. (Check all of the following that apply.)
    - ☒ The wells are not in use and have been properly abandoned.
    - ☐ The wells are not in use and will be properly abandoned.
    - ☐ The wells are in use and comply with 16 TAC Chapter 76.

    ☐ There are no wells or test holes of any kind known to exist on the project site.

Administrative Information

15. ☒ Submit one (1) original and one (1) copy of the application, plus additional copies as needed for each affected incorporated city, groundwater conservation district, and county in which the project will be located. The TCEQ will distribute the additional copies to these jurisdictions. The copies must be submitted to the appropriate regional office.

TABLE OF CONTENTS

1.0 INTRODUCTION **1**

2.0 PROJECT INFORMATION **1**

3.0 INVESTIGATION METHODS **2**

4.0 SOILS AND GEOLOGY **3**

5.0 SUMMARY OF FINDINGS **8**

6.0 REFERENCES **10**

ATTACHMENT A 11
ATTACHMENT B 16
ATTACHMENT C 40

June 2024

Geologic Assessment for the South Lake to South Fork Wastewater Improvements Project, Williamson County, Texas

1.0 INTRODUCTION

The Texas Commission on Environmental Quality (TCEQ) regulates activities that have the potential to pollute the Edwards Aquifer through the Edwards Aquifer Protection Program. Projects meeting a certain criterion over the Edwards Aquifer Recharge Zone must submit an Edwards Aquifer Protection Plan (EAPP).

The purpose of this report is to identify all potential pathways for contaminant movement to the Edwards Aquifer and provide sufficient geologic information so that the appropriate Best Management Practices (BMPs) can be proposed in the EAPP. This report complies with the requirements of Title 30, Texas Administrative Code (TAC) Chapter 213 relating to the protection of the Edwards Aquifer Recharge Zone. Per the Rules, the Geologic Assessment must be completed by a Geologist licensed according to the Texas Geoscience Practice Act.

2.0 PROJECT INFORMATION

The South Lake to South Fork Wastewater Improvement Project consists of the installation of a gravity sewer and force mains that vary in diameter from 12 to 18 inches within a permanent easement, as well as a 50-foot construction easement throughout the majority of the alignment. Collectively, the gravity sewer, force mains, and associated temporary construction easements are referred to as the "project" and are approximately 4.95 miles in length. The South Lake to South Fork Wastewater Improvements Project is located in the City of Georgetown Full Purpose jurisdiction, Williamson County, Texas (**Attachment A, Figure 1**).

Pedestrian investigations of the approximately 4.95-mile project area were performed on numerous dates from November 2022 to April 2024 by Marcos Cardenas, Mason Finley, Andrew Marlow, GIT, Gabriel Nejad, Anna Ozelius, Kevin Ramberg, and Angelica Rapacz, under the supervision of Mark Adams, P.G. with **aci environmental consulting, LLC**. The project, including a 50-foot buffer around all easements, was surveyed.

This report is intended to satisfy the requirements for a Geologic Assessment, which shall be included as a component of a Sewage Collection System (SCS) and Water Pollution Abatement Plan (WPAP). The project is approximately 4.95 miles in total. The proposed site use is for the South Lake to South Fork Wastewater Improvements Project. The scope of the report consists of a site reconnaissance, field survey, and review of existing data and reports. Features identified during the field survey were ranked utilizing the TCEQ matrix for Edwards Aquifer Recharge Zone features. The ranking of the features will determine their viability as "sensitive" features.

3.0 INVESTIGATION METHODS

The following investigation methods and activities were used to develop this report:

- Review of existing files and literature to determine the regional geology and any known caves associated with the project area;
- Review of past geological field reports, cave studies, and correspondence regarding the existing geologic features on the project area, if available;
- Site reconnaissance by a registered professional geologist to identify and examine caves, recharge features, and other significant geological structures;
- Evaluation of collected field data and a ranking of features using the TCEQ Ranking Table 0585 for the Edwards Aquifer Recharge Zone; and
- Review of historic aerial photographs to determine if there are any structural features present, and to determine any past disturbances on the subject property.

4.0 SOILS AND GEOLOGY

The following includes a site-specific description of the soils, geologic stratigraphy, geologic structure, and karstic characteristics as they relate to the Edwards aquifer. Also included in this section is a review of historic aerials for presence of geologic changes or changes to manmade features in bedrock.

Soils

According to the United States Department of Agriculture (USDA) Natural Resource Conservation Service (NRCS) Web Soil Survey (2023), six soil units occur within the project (**Attachment A, Figure 2**):

- EaD - Eckrant cobbly clay, 1 to 8 percent slopes

The Eckrant component makes up 85 percent of the map unit. Slopes are 1 to 8 percent. This component is on ridges on dissected plateaus. The parent material consists of residuum weathered from limestone. Depth to a root restrictive layer, bedrock, lithic, is 4 to 20 inches. The natural drainage class is well drained. Water movement in the most restrictive layer is moderately low. Available water to a depth of 60 inches (or restricted depth) is very low. Shrink-swell potential is high. This soil is not flooded. It is not ponded. There is no zone of water saturation within a depth of 72 inches. Organic matter content in the surface horizon is about 6 percent. **This soil does not meet hydric criteria.** Hydrologic Soil Group: D.

Brackett (7%), Bexar (5%), and Krum (3%) components make up the remaining 15% of the map unit.

- EeB – Eckrant stony clay, 0 to 3 percent slopes, stony

The Eckrant, stony component makes up 85 percent of the map unit. Slopes are 0 to 3 percent. This component is on ridges on dissected plateaus. The parent material consists of residuum weathered from limestone. Depth to a root restrictive layer, bedrock, lithic, is 4 to 20 inches. The natural drainage class is well drained. Water movement in the most restrictive layer is moderately low. Available water to a depth of 60 inches (or restricted

depth) is very low. Shrink-swell potential is moderate. This soil is not flooded. It is not ponded. There is no zone of water saturation within a depth of 72 inches. Organic matter content in the surface horizon is about 6 percent. **This soil does not meet hydric criteria.** Hydrologic Soil Group: D.

Georgetown (8%) and Doss (7%) components make up the remaining 15% of the map unit.

- ErE—Eckrant-Rock outcrop association, 1 to 10 percent slopes

The Eckrant component makes up 58 percent of the map unit. Slopes are 1 to 10 percent. This component is found on ridges of dissected plateaus. The parent material consists of residuum weathered from limestone. Depth to a root restrictive layer, bedrock, lithic, is 4 to 20 inches. The natural drainage class is well drained. Water movement in the most restrictive layer is moderately low. Available water to a depth of 60 inches (or restricted depth) is very low. Shrink-swell potential is moderate. This soil is not flooded or ponded. There is no zone of water saturation within a depth of 72 inches. Organic matter content in the surface horizon is about 6 percent. **This soil does not meet hydric criteria.** Hydrologic Soil Group: D.

Rock outcrop (16%), Tarpley (11%), Real (6%), Brackett (5%), and Pratley (4%) components make up the remaining 42% of the map unit.

- GsB—Georgetown stony clay loam, 1 to 3 percent slopes

The Georgetown component makes up 90 percent of the map unit. Slopes are 1 to 3 percent. This component is on broad ridges on dissected plateaus. The parent material consists of clayey residuum weathered from limestone. Depth to a root restrictive layer, bedrock, lithic, is 20 to 40 inches. The natural drainage class is well drained. Water movement in the most restrictive layer is low. Available water to a depth of 60 inches (or restricted depth) is low. Shrink-swell potential is high. This soil is not flooded. It is not ponded. There is no zone of water saturation within a depth of 72 inches. Organic matter

content in the surface horizon is about 3 percent. **This soil does not meet hydric criteria.** Hydrologic Soil Group: D.

Tarpley (5%), Eckrant (3%), and Fairlie (2%) components make up the remaining 10% of the map unit.

- OlA—Oakalla soils, 0 to 1 percent slopes, channeled, frequently flooded

The Oakalla, channeled component makes up 90 percent of the map unit. Slopes are 0 to 1 percent. This component is on channeled flood plains on dissected plateaus. The parent material consists of loamy alluvium derived from limestone. Depth to a root restrictive layer is greater than 60 inches. The natural drainage class is well drained. Water movement in the most restrictive layer is moderately high. Available water to a depth of 60 inches (or restricted depth) is moderate. Shrinkswell potential is low. This soil is frequently flooded. It is not ponded. There is no zone of water saturation within a depth of 72 inches. Organic matter content in the surface horizon is about 4 percent. **This soil does not meet hydric criteria.** Hydrologic Soil Group: B.

Tarpley (5%), Eckrant (3%), and Fairlie (2%) components make up the remaining 10% of the map unit.

- SvB – Sunev silty clay loam, 1 to 3 percent slopes

The Sunev component makes up 100 percent of the map unit. Slopes are 1 to 3 percent. This component is on stream terraces on dissected plains. The parent material consists of loamy alluvium of Quaternary age derived from mixed sources. Depth to a root restrictive layer is greater than 60 inches. The natural drainage class is well drained. Water movement in the most restrictive layer is moderately high. Available water to a depth of 60 inches (or restricted depth) is moderate. Shrinkswell potential is low. This soil is not flooded. It is not ponded. There is no zone of water saturation within a depth of 72 inches. Organic matter content in the surface horizon is about 2 percent. **This soil does not meet hydric criteria**. Hydrologic Soil Group: B.

Geologic Stratigraphy

According to the *Geologic Map of the Georgetown Quadrangle, Texas*, three geologic units, Alluvium (Qal), Comanche Peak Limestone (Kc), and Edwards Limestone (Ked) occur within the project alignment (**Attachment A, Figure 3**). A description of geologic units by Collins (1997) is as follows:

- Quaternary Alluvium (Qal)

"Gravel, sand, silt, and clay along streams and rivers; inundated regularly. Gravel is mostly limestone and chert. Along minor drainages, includes undivided low terrace deposits. Includes some local bedrock outcrops that are undivided."

- Edwards Limestone (Ked)

"Limestone, dolomitic limestone and marl. Massive to thin beds, chert, and fossiliferous; fossils include rudistids. Shallow subtidal to tidal-flat cycles. Honeycomb textures, voids in collapsed breccias, and cavern systems. Accounts for most of the Edwards aquifer strata. Thickness is between 100ft to 300ft; thins northward."

- Comanche Peak Limestone (Kc)

"Limestone and marl. Nodular, fossiliferous. Lower part of Edwards aquifer strata. Thickens northward from ~40 to 70 ft."

Site-Specific Stratigraphic Column

Formation	Members	Thickness (Collins, 1997)
Quaternary Alluvium (Qal)	N/A	0-10 feet
Edwards Limestone (Ked)	N/A	100-300 feet
Comanche Peak (Kc)	N/A	40-70 feet

Geologic Structure

The geologic strata associated with the Edwards Aquifer include the Georgetown Limestone Formation of the Washita Group, the Edwards Limestone Group, which is interfingered with the Comanche Peak Formation, followed by the Walnut formation, and finally the Glen Rose Formation of the Trinity Group. These Groups dip gently to the southeast and are characterized by the Balcones Fault Escarpment, a zone of en echelon normal faults downthrown to the southeast. Locally, the dominant structural trend of faults within the area is 15°, as evidenced by the mapped fault patterns (**Attachment A, Figure 4**). Thus, all features that have a trend ranging from 0° to 30° are considered "on trend" and were awarded the additional 10 points in the Geologic Assessment Table.

The geology on the site and surrounding tracts up to the border of Lake Georgetown is all Edwards Limestone (Ked), however the Comanche Peak (Kc) is present along the border of Lake Georgetown, suggesting the site is within the lower section of the Edwards Limestone (Collins 1997).

Karstic Characteristics

In limestone landscapes, karst is expressed by erratically developed cavernous porosity from dissolution of bedrock as water combined with weak acids moves through the subsurface. Karst terrains are typical of the Edwards Limestone, occurring across a vast region of Central Texas, including the Balcones Fault Escarpment. The features produced by karst processes include, but are not limited to, sinkholes, solution cavities, solution enlarged fractures, and caves. These features can eventually provide conduits for fluid movement such as surface water runoff, as "point recharge" to the Edwards Aquifer. Faults and manmade features within bedrock can also provide conduits for point recharge in many cases.

According to Edwards Aquifer zone map produced by the TCEQ (2005), the entire project is within the northern segment of the Edwards Aquifer Recharge Zone (**Attachment A, Figure 3**). Thus, all karst features identified as sensitive within the project limits have the potential to be point recharge features into the Edwards Aquifer.

Review of Historic Aerials

Aerial photographs from 1941, 1953, 1962, 1974, 1981, 1988, 1995, 2004, 2010, 2016, and 2022 were reviewed for the site. It was determined that ranching and agricultural activities occurred on the site since before the first aerial image dated 1941 (**Attachment C**). The 1981 aerial shows the first occurrence of the North San Gabriel Dam directly east of the site. In the 1988 aerial, the Cedar Breaks Road first appears and in the 1995 aerial, homes directly south of the project are first seen. In the 2004 aerial, D B Wood Road is first seen, and in 2016, construction on a water tower appears at the intersection of D B Wood Road and Cedar Breaks Road. In the 2022 aerial, construction on the South Lake Georgetown Water Treatment Plant, directly adjacent to the northern portion of the project, first appears. There are no apparent changes to the project throughout the historic aerial collection.

5.0 SUMMARY OF FINDINGS

This report documents the findings of a geologic assessment conducted by **aci environmental consulting** personnel on numerous dates between November 2022 and April 2024. Due to various iterations of the proposed project to move the wastewater line away from sensitive features, a larger area was surveyed. As a result, the sequence of features identified does not follow a logical numerical order. Additionally, as the alignment spans a total length of 4.95 miles, Attachment B, Figure 5 is broken into a series of maps (Figures 5A through 5H), which begin at the northern terminus and follow the alignment south.

Only features within 50 feet of the final project limits are included in this report (Attachment B, Figure 5A through 5H), with the exception of feature F-43, which is included to explain the design of the alignment along Cedar Breaks Rd. More information on this feature can be found in **Attachment B**. A total of 10 features were identified within 50 feet of the limits of the project. Four of these features are manmade features in bedrock, five are naturally occurring non-sensitive features, and one is a naturally occurring sensitive feature. Comprehensive descriptions for each feature can be found in

Attachment B. The manmade features in bedrock are non-sensitive, but are classified as sensitive, as they should be brought to the attention of the project engineers.

6.0 REFERENCES

Collins, E.W., 1997. *Geologic Map of the Georgetown Quadrangle, Texas.* Bureau of Economic Geology. Austin, Texas.

(SCS) Soil Conservation Survey. 1983. Soil Survey of Williamson County, Texas. United States Department of Agriculture. Texas Agriculture Experiment Station.

(TCEQ) Texas Commission on Environmental Quality. 2004. Instructions to Geologists for Geologic Assessments on the Edwards Aquifer Recharge/Transition Zones. October 1, 2004. Austin, Texas.

(TCEQ) Texas Commission on Environmental Quality. 2005. "Edwards Aquifer Protection Program, Chapter 213 Rules - Recharge Zone, Transition Zone, Contributing Zone, and Contributing Zone within the Transition Zone." Map. Digital data. September 1, 2005. Austin, Texas.

(TWDB) Texas Water Development Board. 2023. Water Data Interactive Groundwater Data Viewer. Accessed on October 24, 2023. Available at: http://www2.twdb.texas.gov/apps/waterdatainteractive/groundwaterdataviewer

(USDA NRCS) U.S. Department of Agriculture Natural Resources Conservation Service. 2023. WebSoilSurvey.com. Soil Survey Area: Williamson County, Texas. Date accessed: October 24, 2023.

ATTACHMENT A

Project Maps

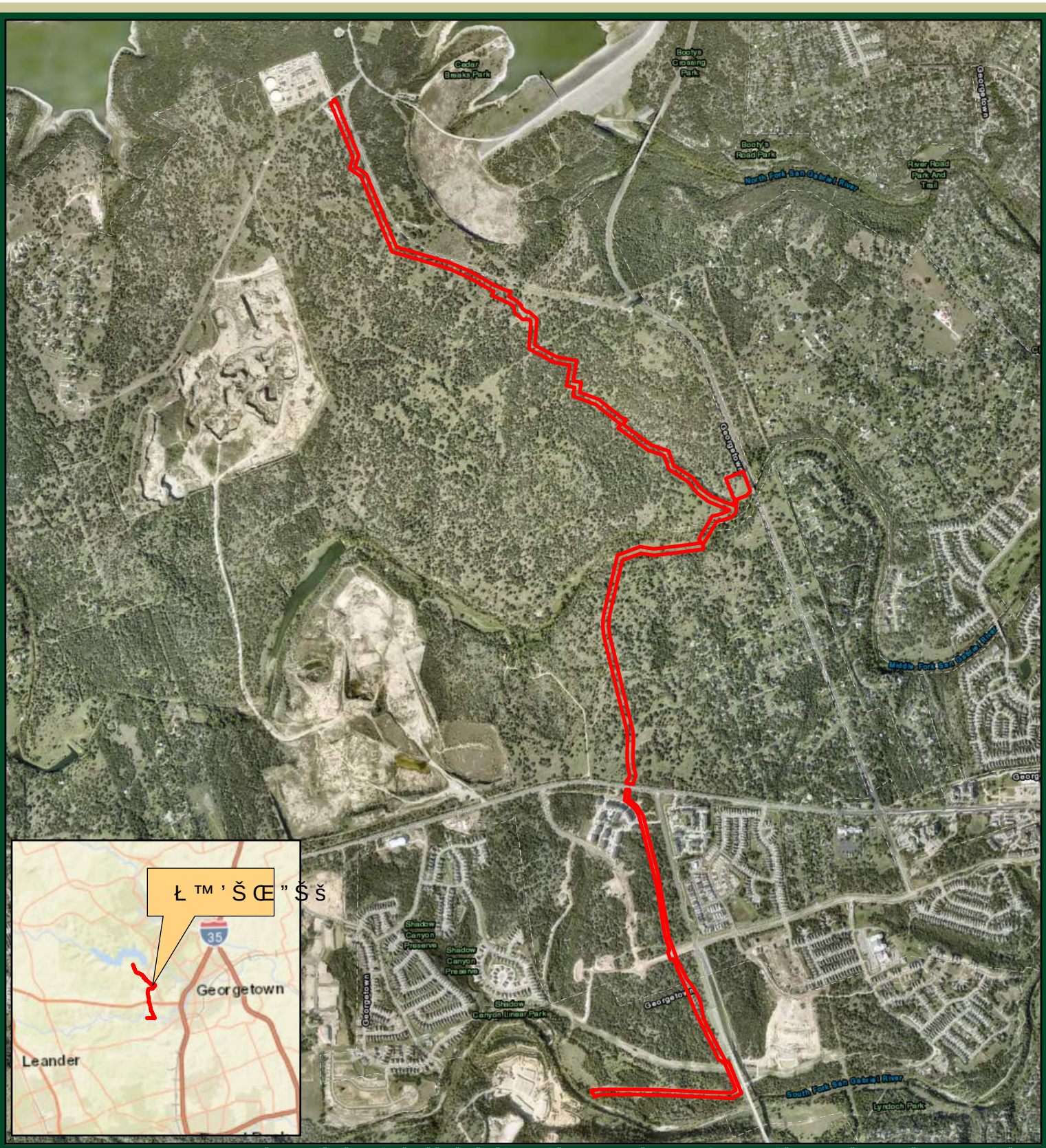

X ð X [W ð W X [V X ð X [V
" " š
1 W ñ X] ð V V V W 1 ™ Š „ , 1 ½ 1 X ð X [V 1 ' " " š

ł Ÿ fi " „ š 1 Ł ™ ' Š Œ " Š š

aci env

Ÿ ž š , 1 – fl " 1 š Ÿ 1 Ÿ ž š , 1 Ÿ ł fl 1 ˇ – œ š " € – š " ł 1 Œ Ž ł Ÿ " Œ " Š š œ „ 1 ™ ł Ÿ fi Ÿ fi š „ š 1 Ÿ ï ñ 1
™ ' ž ł " 1 W ñ 1 Ł ™ ' Š Œ " Š š ž Š " 1 X V X

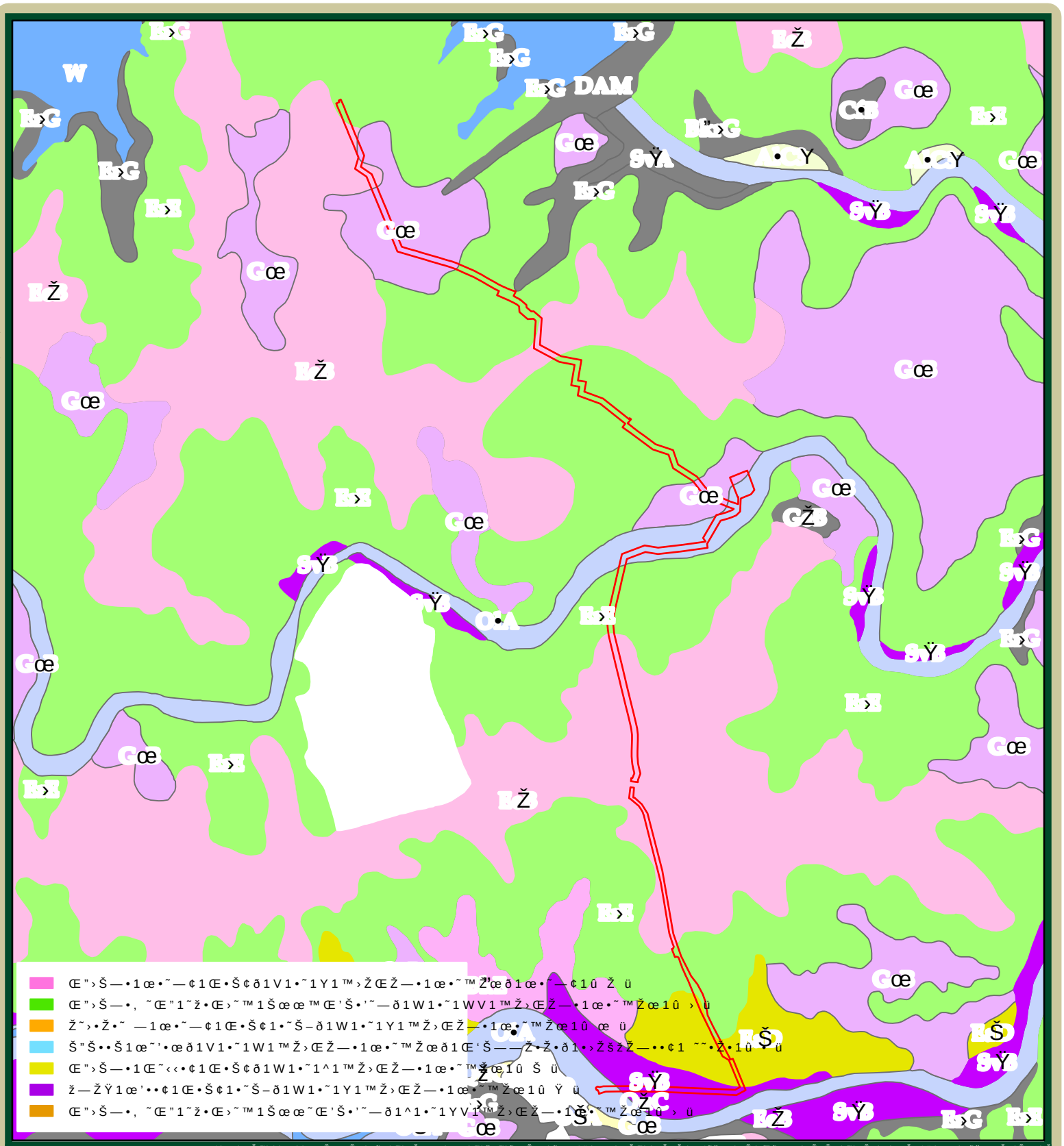
DAM

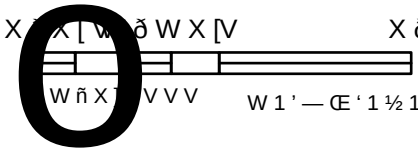

aci env

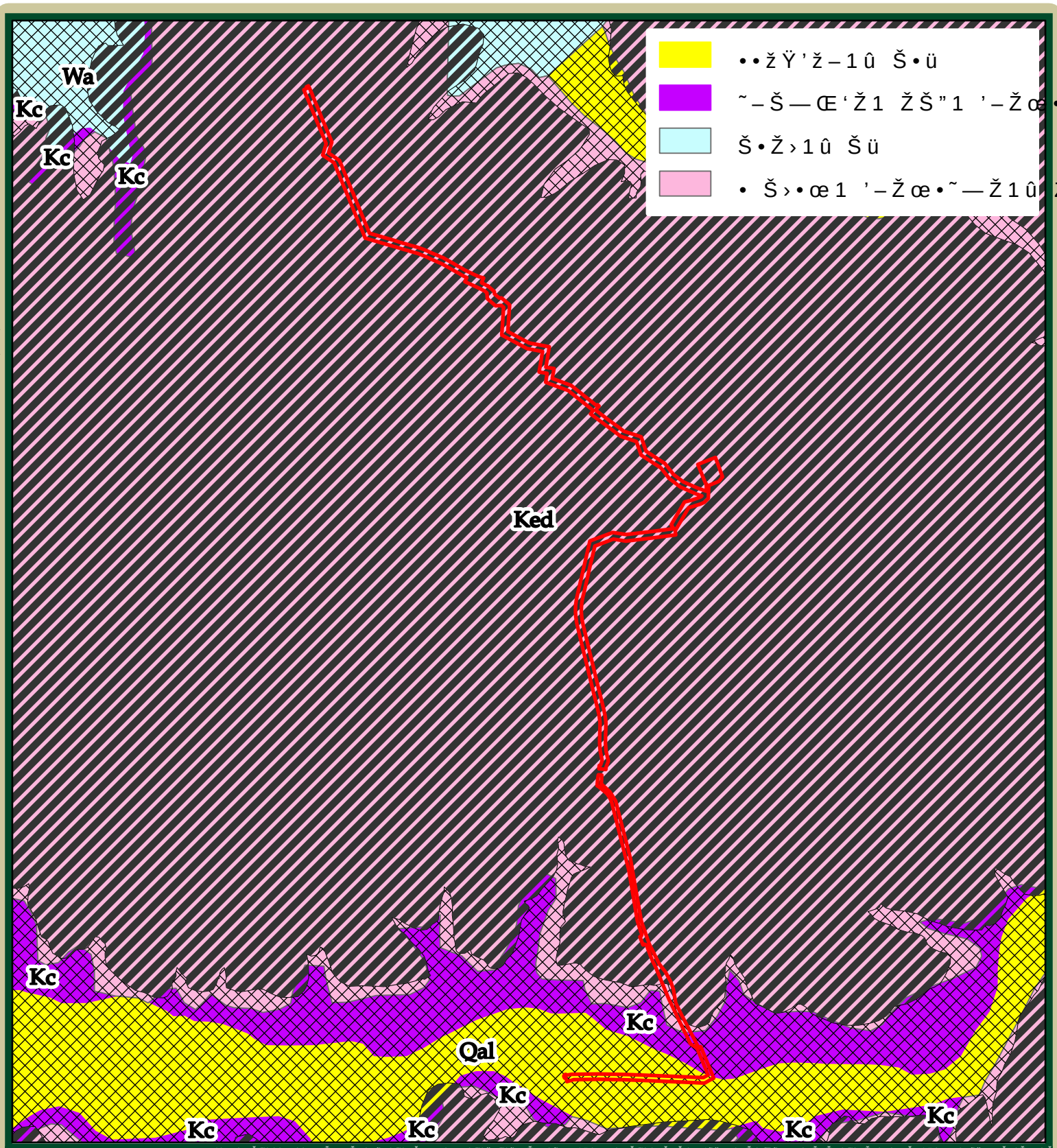
Wa
Kc
Kc
Kc
Ked
Kc
Kc
Qal
Kc
Kc
Kc
Kc

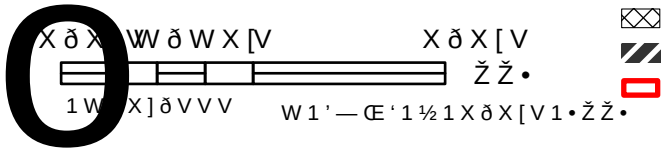

aci
env

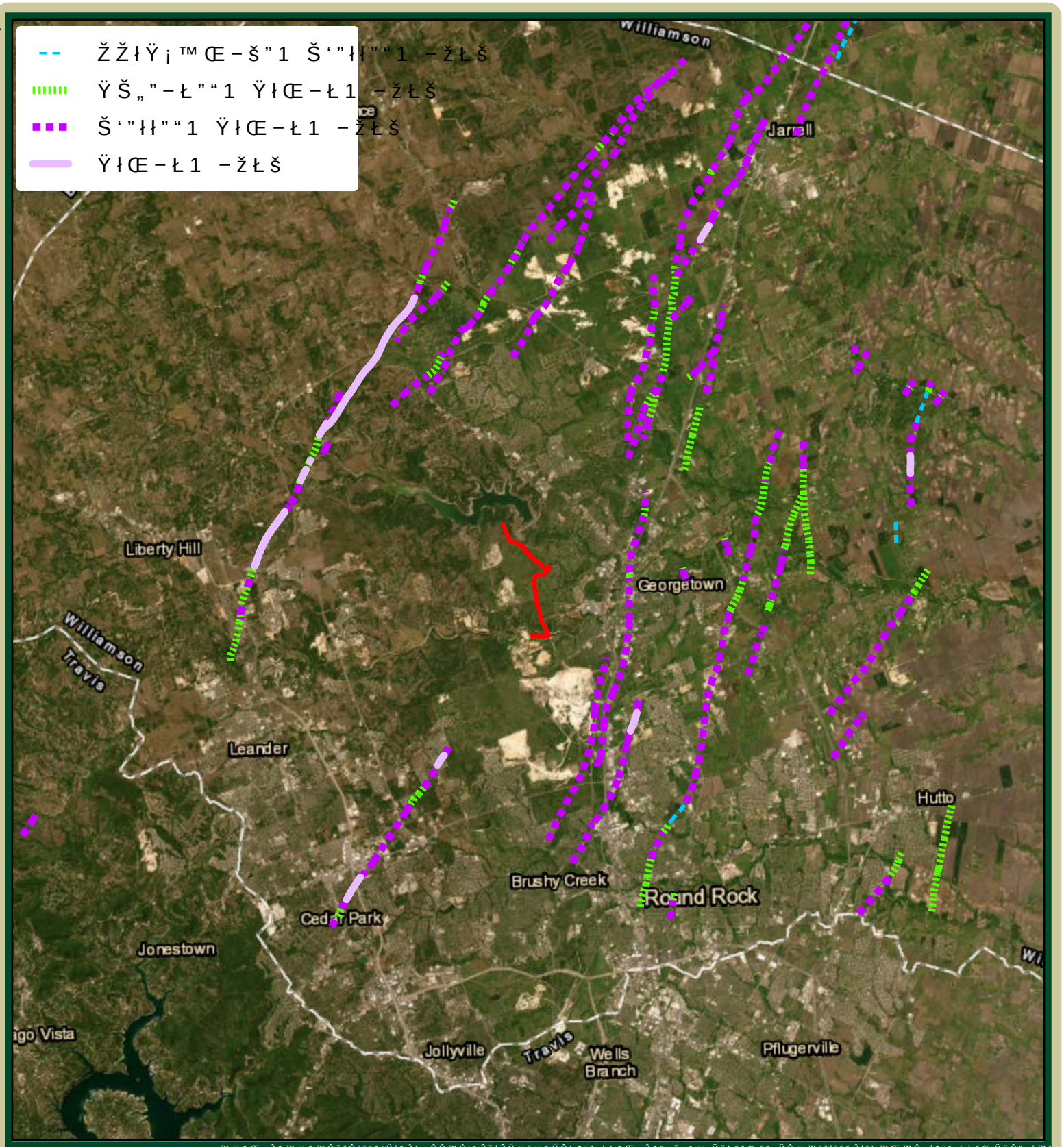
Williamson
Jarrell
Liberty Hill
Georgetown
Williamson
Travis
Leander
Hutto
Brushy Creek
Round Rock
Cedar Park
Jonestown
Jollyville
Travis
Wells Branch
Pflugerville

aci env

ATTACHMENT B

Geologic Table
Geologic and Manmade Feature Map (Figure 5)
Feature Descriptions and Recommendations

GEOLOGIC ASSESSMENT TABLE

PROJECT NAME: South Lake to South Fork Wastewater Improvements Project

LOCATION			FEATURE CHARACTERISTICS												EVALUATION			PHYSICAL SETTING		
1A	1B *	1C*	2A	2B	3	4			5	5A	6	7	8A	8B	9	10		11		12
FEATURE ID	LATITUDE	LONGITUDE	FEATURE TYPE	POINTS	FORMATION	DIMENSIONS (FEET)			TREND (DEGREES)	DIP	DENSITY (NO/FT)	APERTURE (FEET)	INFILL	RELATIVE INFILTRATION RATE	TOTAL	SENSITIVITY		CATCHMENT AREA (ACRES)		TOPOGRAPHY
						X	Y	Z		10						<40	>40	<1.6	>1.6	
F-06	30.655157	-97.728453	SF	20	Ked	4	1	0.5	0°	10	-	-	O	7	37	X		X		Hillside
F-18	30.652722	-97.726107	SC	20	Ked	0.5	0.5	2	-	-	-	-	C, F, V	10	30	X		X		Hillside
F-19	30.652917	-97.726267	SC	20	Ked	1	1	1	-	-	-	-	O	12	32	X		X		Hillside
F-30	30.648595	-97.717785	SC	20	Ked	3	3	1.5	-	-	-	-	C, O, V	8	28	X		X		Hillside
F-43	30.663779	-97.737627	SH	20	Ked	10	10	1	-	-	-	-	C, O, V	34	54		X	X		Hillside
MBN-02	30.65881	-97.733266	MB	30	Ked	?	?	?	-	-	-	-	?	5	35	X		X		Hillside
MBN-04	30.63446	-97.723837	MB	30	Ked	?	?	?	-	-	-	-	?	10	40		X	X		Hillside
MBS-01	30.629738	-97.722529	MB	30	Ked	?	?	?	-	-	-	-	?	5	35	X		X		Hillside
MBS-02	30.626639	-97.721892	MB	30	Ked	?	?	?	-	-	-	-	?	10	40		X	X		Hillside
SI-04	30.628637	-97.722446	C	30	Ked	6	2	6	-	-	-	-	N, O, V	35	65		X	X		Hillside
SI-06	30.624696	-97.720936	O	5	Ked	?	?	?	-	-	-	-	V, N, C	5	10	X			X	Drainage

* DATUM: NAD 1983 State Plane 4203

2A TYPE	TYPE	2B POINTS
C	Cave	30
SC	Solution cavity	20
SF	Solution-enlarged fracture(s)	20
F	Fault	20
O	Other natural bedrock features	5
MB	Manmade feature in bedrock	30
SW	Swallow hole	30
SH	Sinkhole	20
CD	Non-karst closed depression	5
Z	Zone, clustered or aligned features	30

8A INFILLING	
N	None, exposed bedrock
C	Coarse - cobbles, breakdown, sand, gravel
O	Loose or soft mud or soil, organics, leaves, sticks, dark colors
F	Fines, compacted clay-rich sediment, soil profile, gray or red colors
V	Vegetation. Give details in narrative description
FS	Flowstone, cements, cave deposits
X	Other materials

12 TOPOGRAPHY

Cliff, Hilltop, Hillside, Drainage, Floodplain, Streambed

I have read, I understood, and I have followed the Texas Commission on Environmental Quality's Instructions to Geologists. The information presented here complies with that document and is a true representation of the conditions observed in the field. My signature certifies that I am qualified as a geologist as defined by 30 TAC Chapter 213.

STATE OF TEXAS
MARK T. ADAMS
GEOLOGY
No. 1835
LICENSED
PROFESSIONAL GEOSCIENTIST

Date 6/17/2024

Sheet __1___ of __1____

TCEQ-0585-Table (Rev. 10-01-04)

P:\Project Folders\36-21-200 SLG WTP South Fork Interceptor\GIS\Maps\Task 5 Karst\1- Entire Alignment\Figure_5_features.aprx

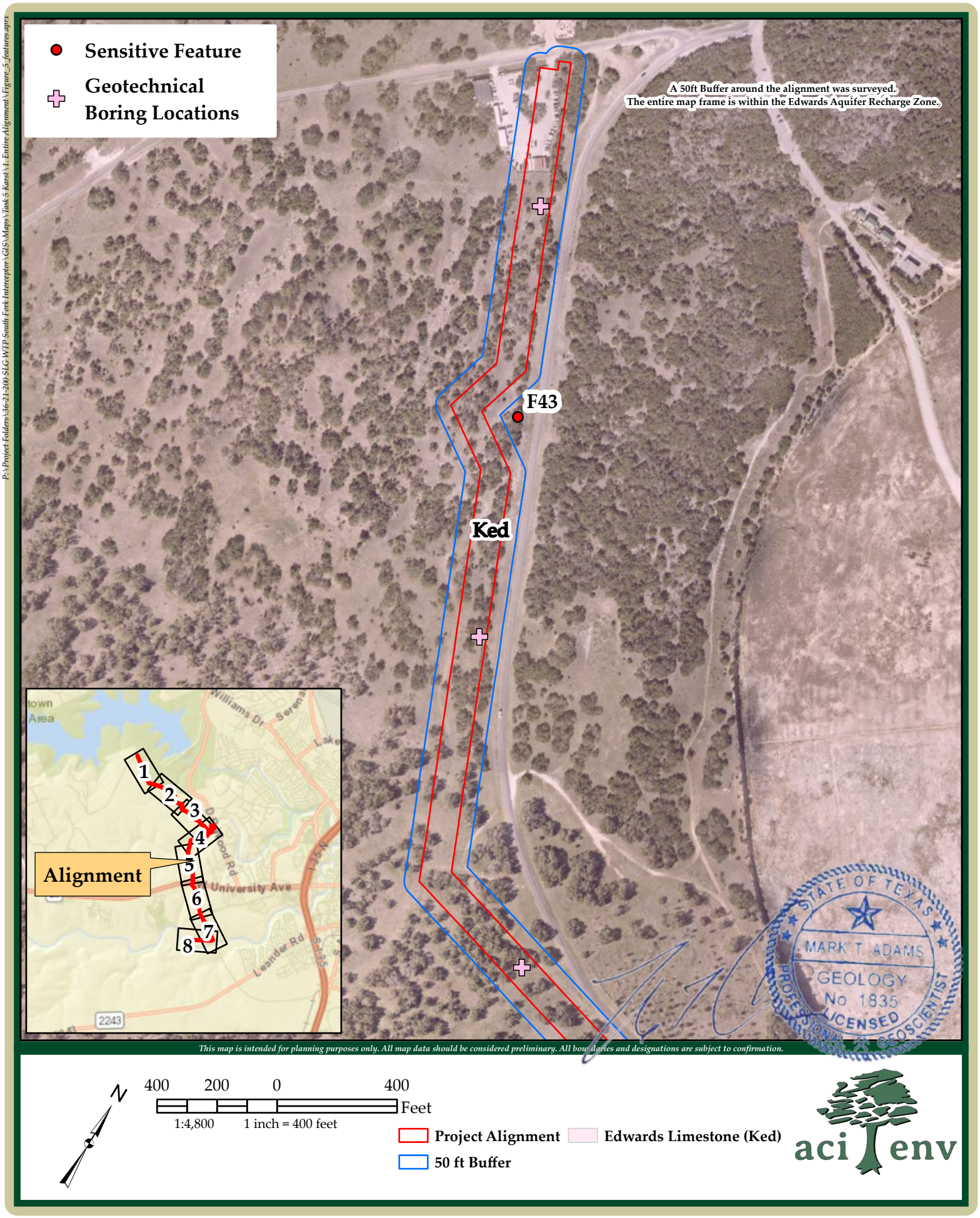

South Lake to South Fork Wastewater Improvements Project **aci Project No.: 36-21-200**

Figure 5: Geologic Features **Page 1 of 8** **June 2024**

P:\Project Folders\36-21-200 SLG WTP South Fork Interceptor\GIS\Maps\Task 5 Karst\1- Entire Alignment\Figure_5_features.aprx

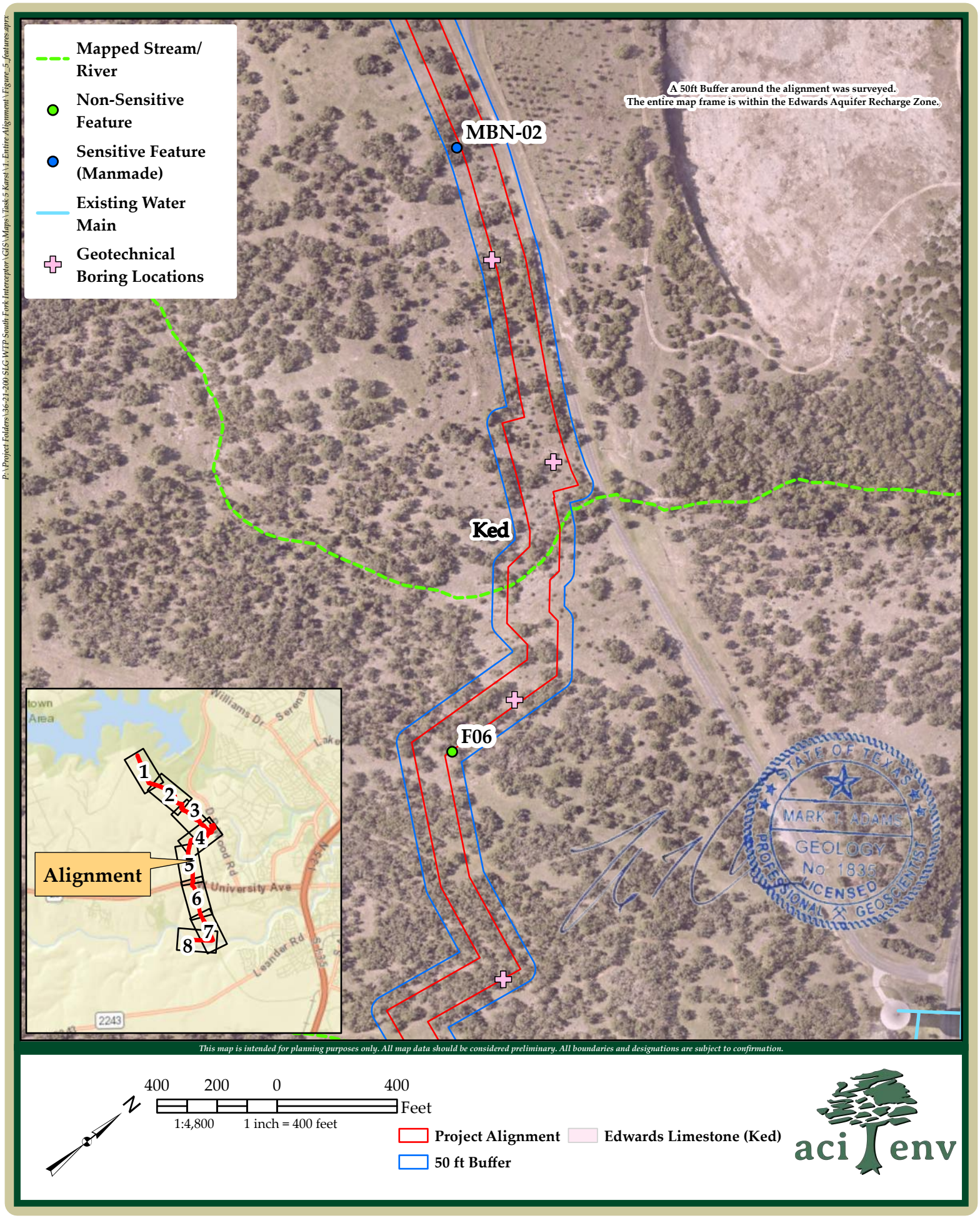

South Lake to South Fork Wastewater Improvements Project **aci Project No.: 36-21-200**

Figure 5: Geologic Features **Page 2 of 8** **June 2024**

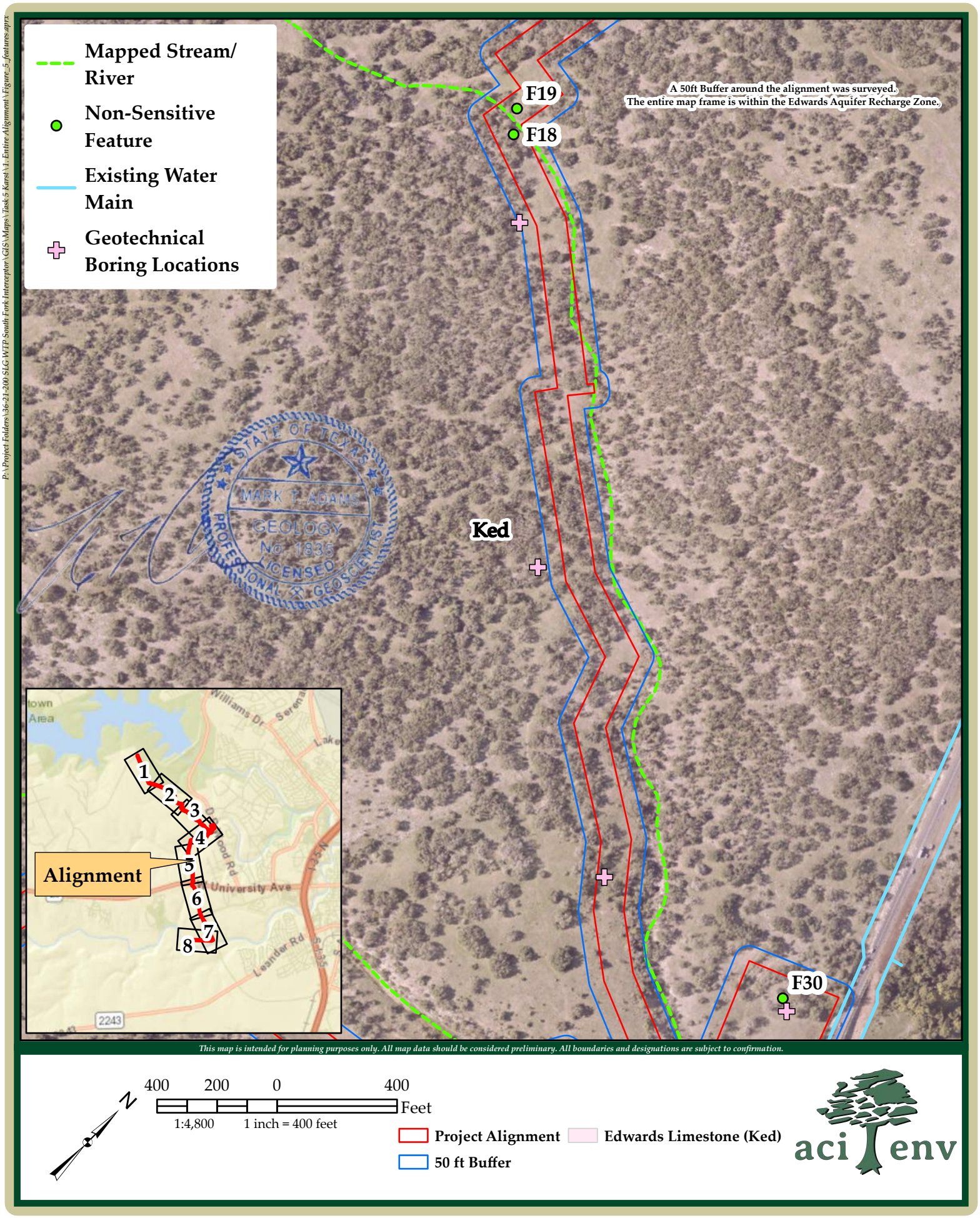

South Lake to South Fork Wastewater Improvements Project **aci Project No.: 36-21-200**

Figure 5: Geologic Features **Page 3 of 8** **June 2024**

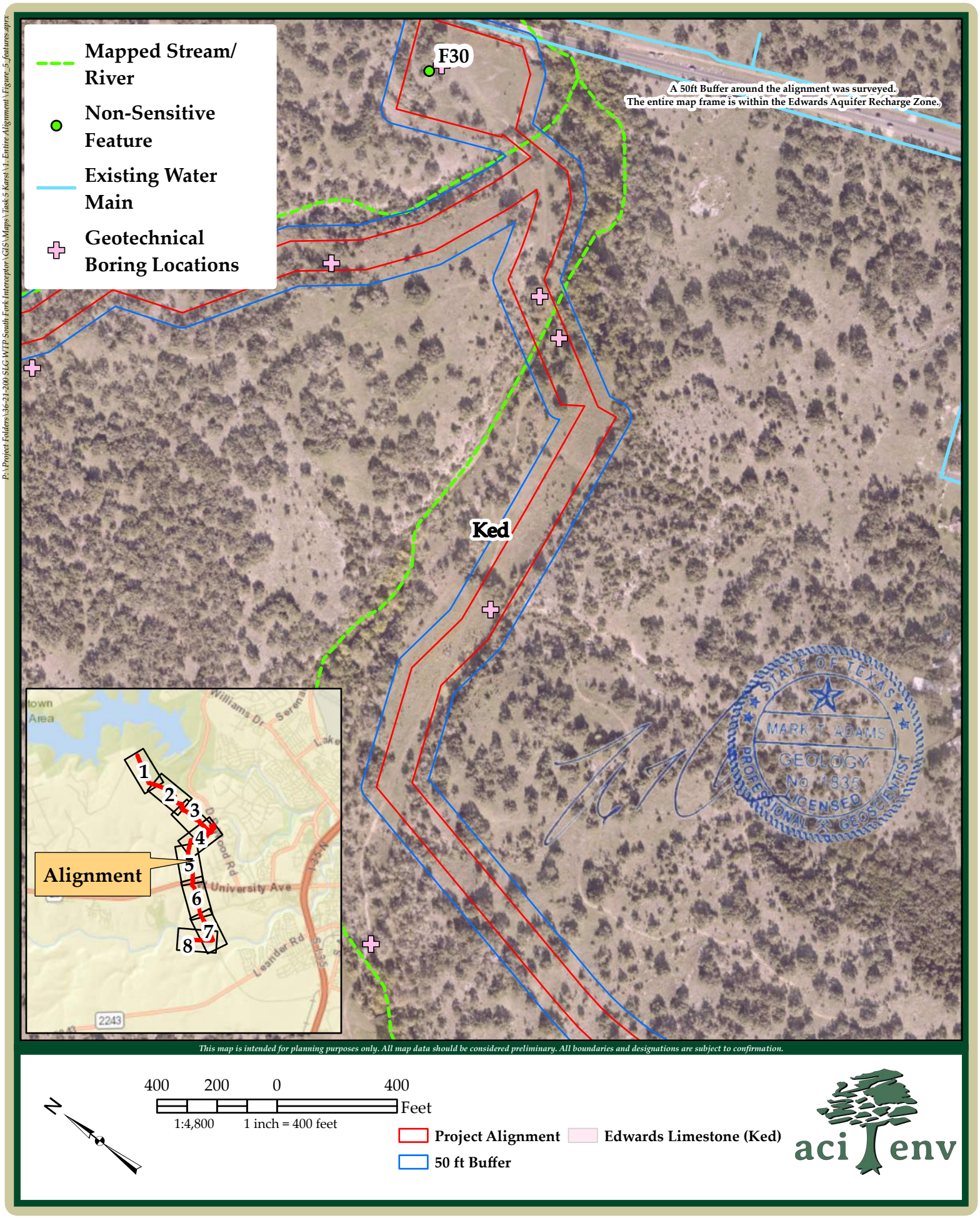

P:\Project Folders\36-21-200 SLG WTP South Fork Interceptor\GIS\Maps\Task 5 Karst\1- Entire Alignment\Figure_5_features.aprx

South Lake to South Fork Wastewater Improvements Project **aci Project No.: 36-21-200**

Figure 5: Geologic Features **Page 4 of 8** **June 2024**

P:\Project Folders\36-21-200 SLG WTP South Fork Interceptor\GIS\Maps\Task 5 Karst\1- Entire Alignment\Figure_5_features.aprx

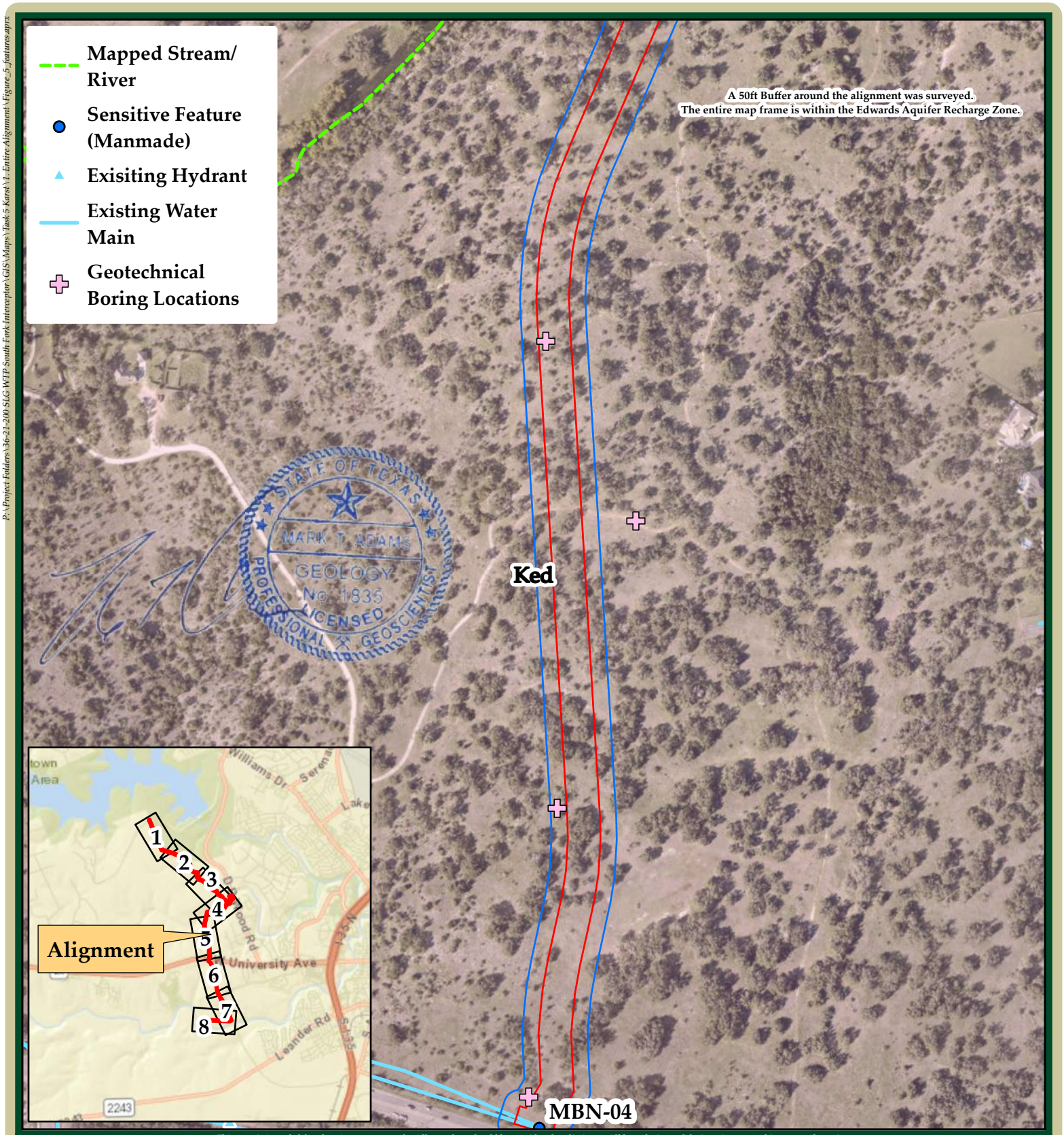

This map is intended for planning purposes only. All map data should be considered preliminary. All boundaries and designations are subject to confirmation.

N

400 200 0 400 Feet

1:4,800 1 inch = 400 feet

Project Alignment

Edwards Limestone (Ked)

50 ft Buffer

aci env

South Lake to South Fork Wastewater Improvements Project **aci Project No.: 36-21-200**

Figure 5: Geologic Features **Page 5 of 8** **June 2024**

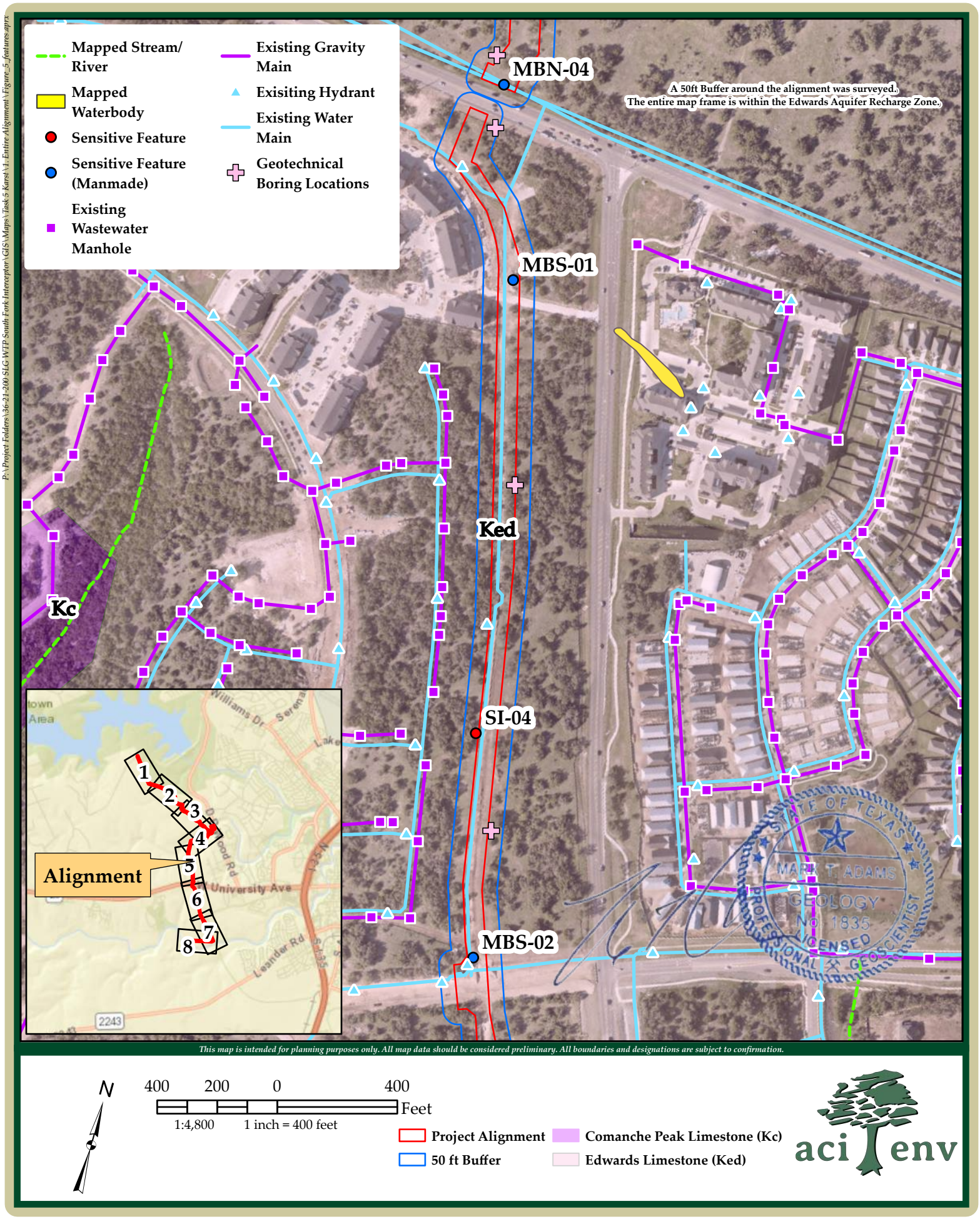

P:\Project Folders\36-21-200 SLG WTP South Fork Interceptor\GIS\Maps\Task 5 Karst\1- Entire Alignment\Figure_5_features.aprx

South Lake to South Fork Wastewater Improvements Project **aci Project No.: 36-21-200**

Figure 5: Geologic Features **Page 6 of 8** **June 2024**

P:\Project Folders\36-21-200 SLG WTP South Fork Interceptor\GIS\Maps\Task 5 Karst\1- Entire Alignment\Figure_5_features.aprx

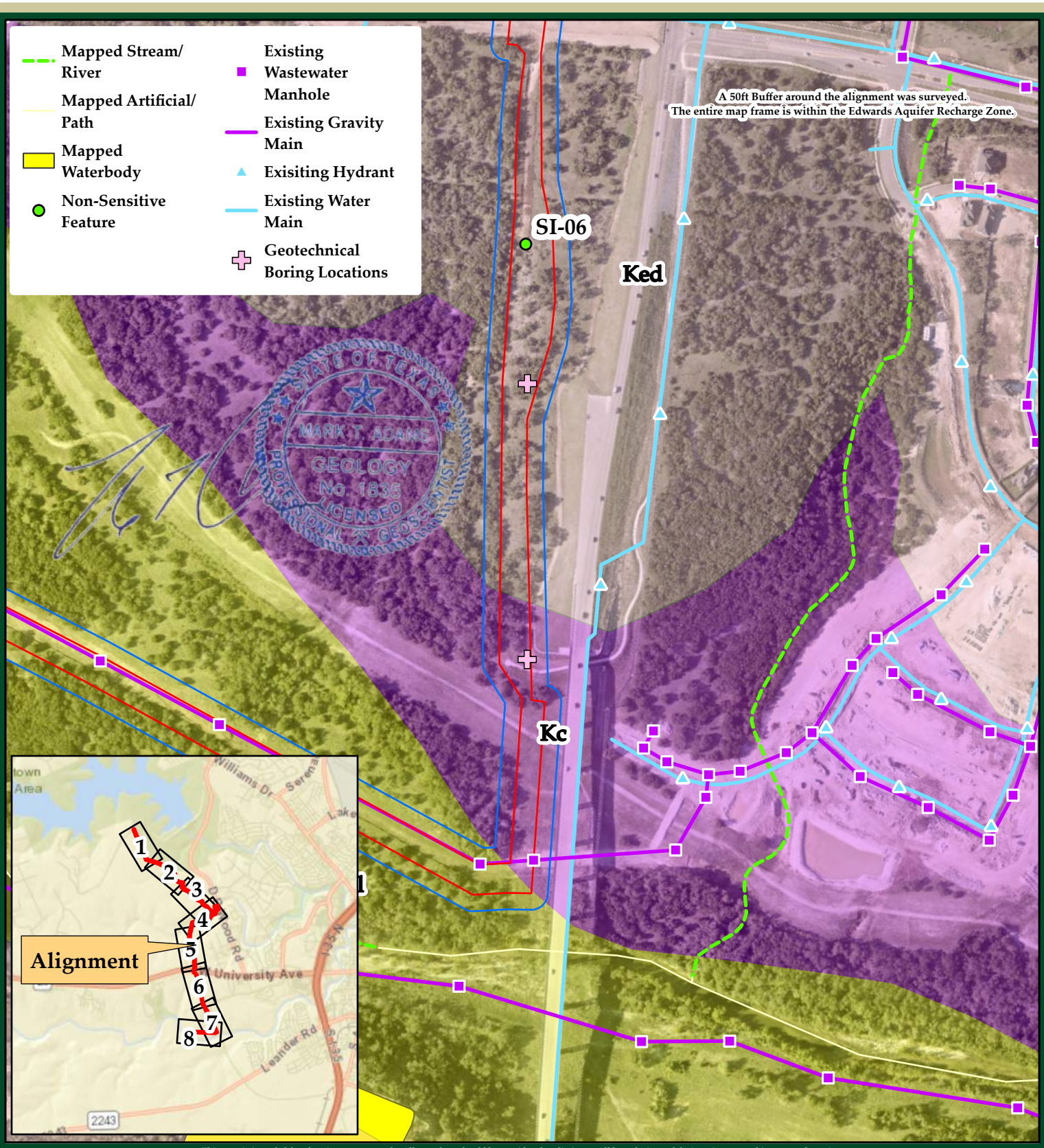

This map is intended for planning purposes only. All map data should be considered preliminary. All boundaries and designations are subject to confirmation.

N

400 200 0 400 Feet

1:4,800 1 inch = 400 feet

Project Alignment
50 ft Buffer
Alluvium (Qal)
Comanche Peak Limestone (Kc)
Edwards Limestone (Ked)

aci env

South Lake to South Fork Wastewater Improvements Project

aci Project No.: 36-21-200

Figure 5: Geologic Features

June 2024

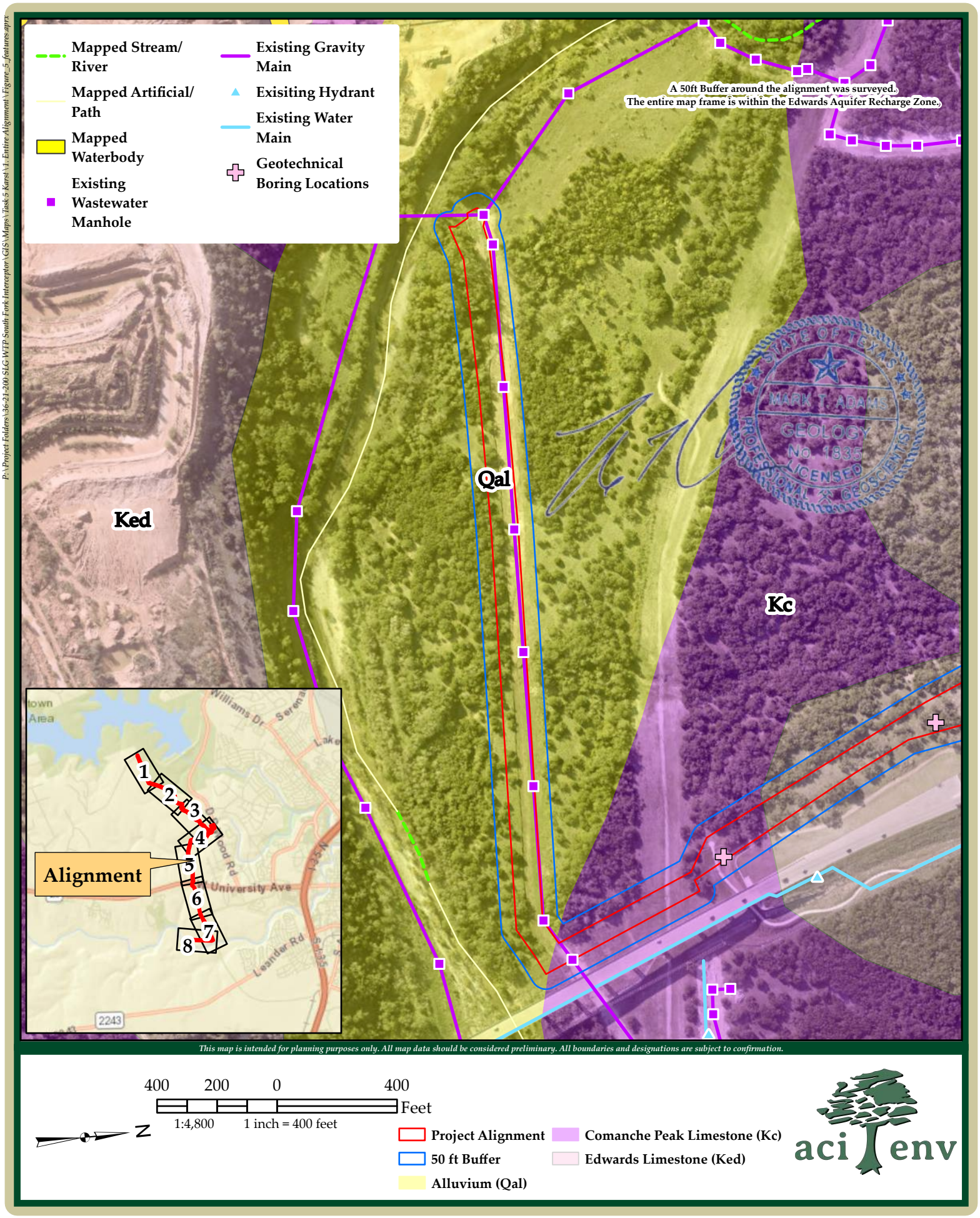

P:\Project Folders\36-21-200 SLG WTP South Fork Interceptor\GIS\Maps\Task 5 Karst\1- Entire Alignment\Figure_5_features.aprx

South Lake to South Fork Wastewater Improvements Project **aci Project No.: 36-21-200**

Figure 5: Geologic Features **Page 8 of 8** **June 2024**

F-06

GPS: 30.655157 -97.728453

This feature is a solution enlarged fracture, trending at 0°. The dimensions of F-06 are approximately 4 feet long, 1 foot wide, and 0.5 feet deep (vertically). The feature is located on a gently sloping hillside in the Edwards Limestone. The infill material consists of loose soils, organics, leaves, and sticks. No additional vertical development was noted beyond the plugged soils and the edges of the fracture are generally sharp and distinct, suggesting little to no lateral water flow into the feature. The catchment area is less than 1.6 acres. Due to the relatively small catchment area, the infiltration rate for the feature is determined to be low and assigned a point value of 7 points. This feature was given a total sensitivity rating of 37, thus the feature is non-sensitive in terms of recharge potential.

Recommendation: There are no required setbacks or protections for this feature.

Photo of F-06

F-18

GPS: 30.652722, -97.726107

This feature is a solution cavity positioned on a gently sloping hillside, located in the Edwards Limestone. The dimensions of F-18 are approximately 0.5 foot long by 0.5 foot wide, and 2 foot deep. The feature is not rock lined and does not appear to be of karst origin. The infill material consists of cobbles, fine sediment, and vegetation such as greenbrier and Texas persimmon. The drainage area is less than 1.6 acres. As such, the infiltration rate has been determined to be low, and assigned a point value of 10 points. This feature was given a total sensitivity rating of 30, thus the feature is non-sensitive in terms of recharge potential.

Recommendation: There are no required setbacks or protections for this feature.

Photo of F-18

F-19

GPS: 30.652917, -97.726267

This feature is a solution cavity positioned on a gently sloping hillside, located in the Edwards Limestone. The dimensions of F-19 are approximately 1 foot long by 1 foot wide, and 1 foot deep. The feature does not appear to have any portals beyond the initial surface expression. The infill material consists of plugged soils and loose material in the form of organics, leaves, and sticks. The potential drainage area is likely less than 1.6 acres. As such, the infiltration rate has been determined to be low, and assigned a point value of 12 points. This feature was given a total sensitivity rating of 32, thus the feature is non-sensitive in terms of recharge potential.

Recommendation: There are no required setbacks or protections for this feature.

Photo of F-19

F-30

GPS: 30.648595, -97.717785

This feature is a solution cavity positioned on a gently sloping hillside, located in the Edwards Limestone. The dimensions of F-30 are approximately 3 feet in diameter by 0.5 foot deep. The infill material consists of cobbles, organic material such as leaves, and sticks, as well as vegetation such as southern dewberry and persimmon. The potential drainage area is likely lower than 1.6 acres. As such, the infiltration rate has been determined to be low and assigned a point value of 8 points. This feature was given a total sensitivity rating of 28, thus the feature is non-sensitive in terms of recharge potential.

Recommendation: There are no required setbacks or protections for this feature.

Photo of F-30

F-43

GPS: 30.663779, -97.737627

This feature is a sinkhole positioned on a gently sloping hillside, located in the Edwards Limestone. The dimensions of the drainage basin are approximately 10 feet in diameter, and 1 foot deep. The infill material consists large cobbles, leaf litter and other organic material, and vegetation including oaks and persimmon. The drainage area is less than 1.6 acres. The infiltration rate was determined to be intermediate and assigned a value of 34 points. The feature was given a total sensitivity rating of 54 points, thus the feature is sensitive in terms of recharge potential. This feature was brought to the attention of the engineer and the alignment was redesigned so that the project area, including all easements, would not come within 50 feet of the feature drainage basin. The distance from the edge of the drainage basin to the project area is approximately 85 feet.

Recommendation: A 50-foot buffer around the drainage basin of the feature is already being maintained.

Photo of F-43

MBN-02

GPS: 30.65881, -97.733266

This feature is a manmade feature in bedrock (a pipe). The dimensions of this feature are unknown and the infill material for this feature is undetermined. The feature is located in the Edwards Limestone and is positioned on a gently sloping hillside. This feature has a catchment area of less than 1.6 acres. It was determined that this feature has a low infiltration rate and given a point value of 5 points due to its status as a manmade feature in bedrock and lack of subsurface interference. This feature was given a total sensitivity rating of 35, thus the feature is non-sensitive in terms of recharge potential.

Recommendation: No setbacks are required for this feature; however, this feature needs to be brought to the attention of the engineer.

Photo of MBN-02

MBN-04
GPS: 30.63446, -97.723837
This feature is a manmade feature in bedrock (a waterline valve). The dimensions of this feature are unknown and the infill material for this feature is undetermined. The feature is located in the Edwards Limestone and is positioned on a gently sloping hillside. This feature has a catchment area of less than 1.6 acres. It was determined that this has a low infiltration rate of 10 points due and has been deemed sensitive as it is an underground utility. This feature was given a total sensitivity rating of 40 and deemed sensitive for the sole purpose of being brought to the attention of the engineer but does not require any setbacks.

Recommendation: No setbacks are required for this feature; however, this feature needs to be brought to the attention of the engineer.

Photo of MBN-04

MBS-01
GPS: 30.632743, -97.723236
This feature is a manmade feature in bedrock (a multifamily exterior wall field mock-up) with an approximate length of 20 feet, width of 10 feet, and extends below the surface for an unknown depth. The feature is located in the Edwards Limestone and is positioned on a gently sloping hillside. This feature has a catchment area of less than 1.6 acres and a low infiltration rate of 5 points. It was determined that this feature is non-sensitive and given a total sensitivity rating of 35 points due to its status as a manmade feature in bedrock and lack of subsurface interference.

Recommendation: No setbacks are required for this feature; however, this feature needs to be brought to the attention of the engineer.

Photo of MBS-01

MBS-02
GPS: 30.626639, -97.721892

This feature is a manmade feature in bedrock, a fire hydrant and waterline utilities. The dimensions of this feature are unknown. The feature is located in the Edwards Limestone and is positioned on a gently sloping hillside. This feature has a catchment area of less than 1.6 acres. It was determined that this has a low infiltration rate of 10 points due and has been deemed sensitive as it is an underground utility. This feature was given a total sensitivity rating of 40 points and deemed sensitive for the sole purpose of being brought to the attention of the engineer but does not require any setbacks.

Recommendation: No setbacks are required for this feature; however, this feature needs to be brought to the attention of the engineer.

Photo of MBS-02

SI-04

GPS: 30.628637, -97.722446

SI-04 is a feature that was reportedly discovered as part of the Southwest Bypass project in Georgetown, Texas. This feature is shown in the GA table and identified as a small cave on a gently sloping hillside in the Edwards Group (Ked) with no discernible footprint beyond the sink area. The cave was measured to be approximately 6 feet long by 2 feet wide by 6 feet deep. The aperture of the cave is mostly clean bedrock, however, infill material consisted of loosely compact soils, cobbles, and organic materials, as well as vegetation. The drainage area is less than 1.6 acres. It was determined that this feature has a high infiltration and assigned a value of 35 points. This feature was given a total sensitivity rating of 65 points and determined to be sensitive in terms of recharge aquifer potential.

The wastewater line project alignment is approximately 55 feet east of SI-04 with a waterline and a recent surface drainage swale between. The waterline appears to have been installed around 2016 or 2017 and the drainage swale appears to be much more recent. Based on the presence of these 2 manmade features, it does not appear that the proposed wastewater line will impact SI-04 and that the current anticipated distance of approximately 55 feet is protective of the feature.

Recommendation: This feature is sensitive. As this feature was known previously from associated projects and is technically out of the proposed wastewater line project area, a specific buffer is not discussed.

Photos of SI-04

Photo of drainage swale adjacent to SI-04

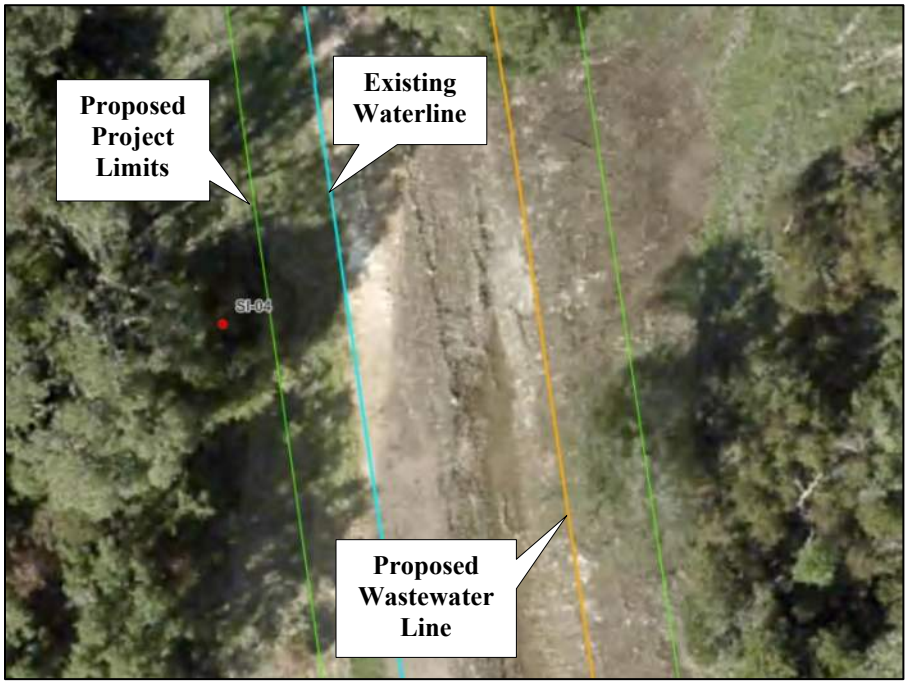

SI-04 and project limits on aerial background.

SI-06

GPS: 30.624696, -97.720936

SI-06 is considered an "other- natural bedrock feature", rimrock with several dry seeps. This feature is positioned in a drainage in the Edwards Group (Ked). The feature was measured to be at least 20 feet in length and approximately 20 feet tall, at its deepest, within the alignment. The infill material consisted of vegetation such as Ashe juniper, live oak, cedar elm, and persimmon, as well as bedrock, and cobbles. The drainage area is greater than 1.6 acres; however, it was determined that this feature has low infiltration rate (5 pts) due to its lack of karstic characteristics. SI-06 is a scour type feature located within a drainage, formed by erosional activities over time. The dry seeps scattered throughout the rimrock are located at the top of the feature and appear to by relict or ephemeral discharge features. This feature was given a total sensitivity rating of 10 points and determined to be non-sensitive in terms of recharge aquifer potential.

Recommendation: This feature is non-sensitive. No setbacks are required.

Photo of SI-06

View of SI-06 from the top down

ATTACHMENT C

Historic Aerial Photographs

Prepared for:

ACI CONSULTING
1001 Mopac Circle
Austin, TX 78746

BANKS ENVIRONMENTAL DATA
A DIVISION OF THE BANKS GROUP

Historical Aerial Photographs

South Lake Georgetown WTP Wastew

TX

Williamson County

PO #: 36-21-200

ES-141562

Wednesday, February 8, 2023

Date: 2022
Source: USDA

0 1,000 2,000 4,000 Feet

BANKS
ENVIRONMENTAL DATA
A DIVISION OF THE BANKS GROUP

Date: 2016
Source: USDA

0 1,000 2,000 4,000 Feet

BANKS
ENVIRONMENTAL DATA
A DIVISION OF THE BANKS GROUP

Date: 2010
Source: USDA

0 1,000 2,000 4,000 Feet

BANKS
ENVIRONMENTAL DATA
A DIVISION OF THE BANKS GROUP

Date: 2004
Source: USDA

0 1,000 2,000 4,000 Feet

BANKS
ENVIRONMENTAL DATA
A DIVISION OF THE BANKS GROUP

Date: 1995
Source: USGS

0 1,000 2,000 4,000 Feet

BANKS
ENVIRONMENTAL DATA
A DIVISION OF THE BANKS GROUP

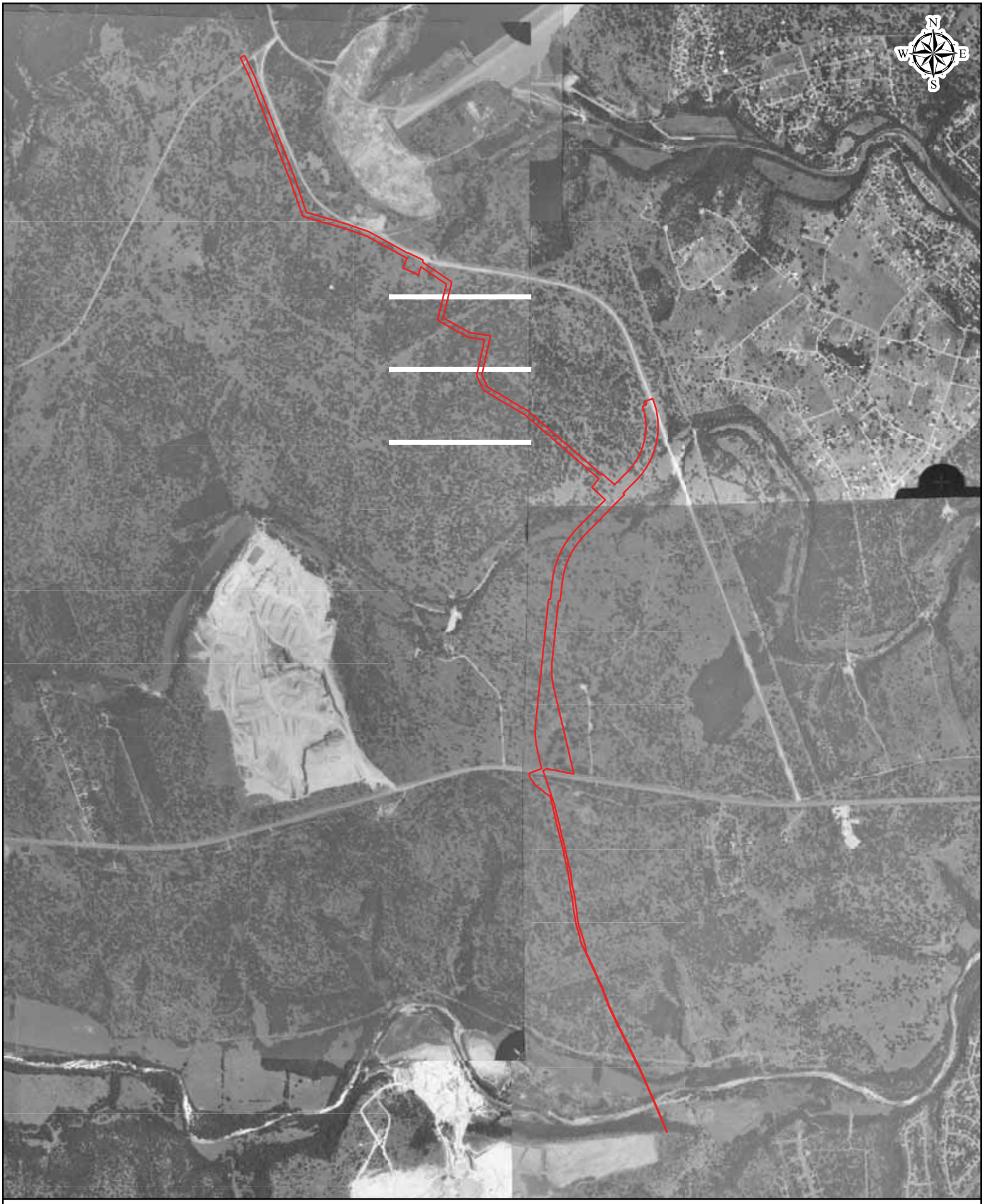

Date: 1988
Source: TXDOT

0 1,000 2,000 4,000 Feet

BANKS
ENVIRONMENTAL DATA
A DIVISION OF THE BANKS GROUP

Date: 1981
Source: USGS

0 1,000 2,000 4,000 Feet

BANKS
ENVIRONMENTAL DATA
A DIVISION OF THE BANKS GROUP

Date: 1974
Source: USGS

0 1,000 2,000 4,000 Feet

BANKS
ENVIRONMENTAL DATA
A DIVISION OF THE BANKS GROUP

Date: 1962
Source: USGS

0 1,000 2,000 4,000 Feet

BANKS
ENVIRONMENTAL DATA
A DIVISION OF THE BANKS GROUP

Date: 1953
Source: AMS

0 1,000 2,000 4,000 Feet

BANKS
ENVIRONMENTAL DATA
A DIVISION OF THE BANKS GROUP

Date: 1941
Source: ASCS

0 1,000 2,000 4,000 Feet

BANKS
ENVIRONMENTAL DATA
A DIVISION OF THE BANKS GROUP

AERIAL SOURCE DEFINITIONS

Acronym	Agency
NASA	National Aeronautics & Space Administration
AMS	Army Mapping Service
ASCS	Agricultural Stabilization & Conservation Service
SCS	Soil Conservation Service
USBR	United States Bureau of Reclamation
Fairchild	Fairchild Aerial Surveys
TXDOT	Texas Department of Transportation
BLM	Bureau of Land Management
USAF	United States Air Force
USCOE	United States Corps of Engineers
USDA	United States Department of Agriculture
USGS	United States Geological Survey
WALLACE	Wallace-Zingery Aerial Surveys
TNRIS	Texas Natural Resources Information System

COPYRIGHT POLICY & DISCLAIMER

This report is solely for the limited use of the client and its customers. Banks Environmental Data, Inc. makes no warranties as to accuracy, validity, completeness, merchantability, quality, condition, suitability or fitness for a particular use or purpose in respect to this report and any information contained herein. All risk is assumed by the user. Banks Environmental Data, Inc. assumes no liability to any party for loss or damage whether rising out of errors or omissions, negligence, accident, or any other cause. In no event shall Banks Environmental Data, Inc., its affiliates or agents, be liable to anyone for special incidental, consequential or exemplary damages.

Organized Sewage Collection System Application

Texas Commission on Environmental Quality

For Regulated Activities on the Edwards Aquifer Recharge Zone and Relating to 30 TAC §213.5(c), Effective June 1, 1999

To ensure that the application is administratively complete, confirm that all fields in the form are complete, verify that all requested information is provided, consistently reference the same site and contact person in all forms in the application, and ensure forms are signed by the appropriate party.

Note: Including all the information requested in the form and attachments contributes to more streamlined technical reviews.

Regulated Entity Name: South Lake to South Fork Wastewater Improvements

1. ☒ **Attachment A – SCS Engineering Design Report**. This Engineering Design Report is provided to fulfill the requirements of 30 TAC Chapter 217, including 217.10 of Subchapter A, §§217.51 – 217.70 of Subchapter C, and Subchapter D as applicable, and is required to be submitted with this SCS Application Form.

Customer Information

2. The entity and contact person responsible for providing the required engineering certification of testing for this sewage collection system upon completion (including private service connections) and every five years thereafter to the appropriate TCEQ region office pursuant to 30 TAC §213.5(c) is:

   Contact Person: Chris Pousson
   Entity: City of Georgetown
   Mailing Address: 300-1 Industrial Ave
   City, State: Georgetown, TX Zip: 78626
   Telephone: (512) 930-8162 Fax: (512) 930-3559
   Email Address: chris.pousson@georgetown.org
   The appropriate regional office must be informed of any changes in this information within 30 days of the change.

3. The engineer responsible for the design of this sewage collection system is:

   Contact Person: Gerald S. Furrier
   Texas Licensed Professional Engineer's Number: 129811
   Entity: CDM Smith, Inc.
   Mailing Address: 8310-1 N Capital of Texas Hwy, Suite 250
   City, State:Austin, TX Zip: 78731
   Telephone:713-423-7337 Fax:_____
   Email Address:furrierg@cdmsmith.com

Project Information

4. Anticipated type of development to be served (estimated future population to be served, plus adequate allowance for institutional and commercial flows):

   ☒ Residential: Number of single-family lots: 4400
   ☒ Multi-family: Number of residential units: 19900
   ☐ Commercial
   ☐ Industrial
   ☐ Off-site system (not associated with any development)
   ☐ Other: _____

5. The character and volume of wastewater is shown below:

   100% Domestic — 13,260,000 gallons/day
   _____% Industrial — _____ gallons/day
   _____% Commingled — _____ gallons/day

   Total gallons/day: 13,260,000 (at build out condition)

6. Existing and anticipated infiltration/inflow is _____ gallons/day. This will be addressed by: Georgetown Utility System. See attached excerpt from City of Georgetown Wastewater Master Plan 2023

7. A Water Pollution Abatement Plan (WPAP) is required for construction of any associated commercial, industrial or residential project located on the Recharge Zone.

   ☐ The WPAP application for this development was approved by letter dated _____. A copy of the approval letter is attached.
   ☒ The WPAP application for this development was submitted to the TCEQ on same as this application, but has not been approved.
   ☐ A WPAP application is required for an associated project, but it has not been submitted.
   ☐ There is no associated project requiring a WPAP application.

8. Pipe description:

Table 1 - Pipe Description

Pipe Diameter(Inches)	*Linear Feet (1)*	*Pipe Material (2)*	*Specifications (3)*
See table below			

Total Linear Feet: 25,969

(1) Linear feet - Include stub-outs and double service connections. Do not include private service laterals.
(2) Pipe Material - If PVC, state SDR value.
(3) Specifications - ASTM / ANSI / AWWA specification and class numbers should be included.

Based on the 2018 WWMP, it was decided between the City and CDM Smith that RDII for future development areas would be assumed at 750 gallons per acre per day (gpad). For the 2022 WWMP, CDM Smith recommends keeping this assumption. As a point of reference, the City of Austin uses 750 gpad peak RDII for their design parameter. Overall, it was decided that 750 gpad for peak RDII flow was more reasonable for planning for buildout of the entire service area. This value is used for modeling and service area planning, but the design criterion to be used by developers for specific areas will remain at 1,000 gpad as specified in the design criteria portion of Appendix C.

Table 3-5 Wastewater Flow Criteria for Future Development Areas

Wastewater Flow Category	Criteria
Ground Water Infiltration (GWI)	
Residential	30 gallons per capita/day (gpcd)
Nonresidential	25% of average nonresidential BWF
Base Wastewater Flow (BWF)	
Typical Residential	70 gpcd
Age Restricted Planned Unit Development	55 gpcd
Nonresidential	Based on future land use densities or information provided by developer
BWF Peaking Factors	
Residential	2.1
Nonresidential	1.5
Rainfall Dependent Inflow and Infiltration (RDII)	
Peak RDII	750 gal/ac/day

Note: gpcd is gallons per capita per day

From City of Georgetown Wastewater Master Plan 2023

Table 1 - Pipe Description

Pipe Diameter (Inches)	Linear Feet	Pipe Material	Specifications
8 (WW)	25	PVC SDR 26	ASTM D3034
12 (WW)	447	PVC SDR 26	ASTM D3034
15 (WW)	9,411	PVC SDR 26	ASTM D3034
18 (WW)	80	PVC SDR 26	ASTM D3034
24 (WW)	775	PVC SDR 26/PS115	ASTM F679
30 (WW)	7900	PVC SDR 26/PS115	ASTM F679
36 (WW)	276	FRP/HOBAS	ASTM D 3262 SN72
12 (FM)	1,300	DR 18 PVC	AWWA C900
18 (FM)	5,755	DR 18 PVC	AWWA C900
Total	25,969		

9. The sewage collection system will convey the wastewater to the San Gabriel Wastewater (name) Treatment Plant. The treatment facility is:

   ☒ Existing
   ☐ Proposed

10. All components of this sewage collection system will comply with:

   ☒ The City of Georgetown standard specifications.
   ☒ Other. Specifications are attached.

11. ☐ No force main(s) and/or lift station(s) are associated with this sewage collection system.

   ☒ A force main(s) and/or lift station(s) is associated with this sewage collection system and the **Lift Station/Force Main System Application** form (TCEQ-0624) is included with this application.

Alignment

12. ☒ There are no deviations from uniform grade in this sewage collection system without manholes and with open cut construction.

13. ☒ There are no deviations from straight alignment in this sewage collection system without manholes.

   ☐ **Attachment B - Justification and Calculations for Deviation in Straight Alignment without Manholes**. A justification for deviations from straight alignment in this sewage collection system without manholes with documentation from pipe manufacturer allowing pipe curvature is attached.

   ☐ For curved sewer lines, all curved sewer line notes (TCEQ-0596) are included on the construction plans for the wastewater collection system.

Manholes and Cleanouts

14. ☒ Manholes or clean-outs exist at the end of each sewer line(s). These locations are listed below: (Please attach additional sheet if necessary)

Table 2 - Manholes and Cleanouts

Line	*Shown on Sheet*	*Station*	*Manhole or Clean-out?*
See following sheet for all manholes	Of		
	Of		
	Of		
	Of		
	Of		
	Of		

Table 2 - Manholes and Cleanout

Line	Shown on Sheet	Station	Manhole or Clean-out?
30" WW	C-1	0+55	MH
30" WW	C-1	0+90	MH
30" WW	C-1	2+02	MH
30" WW	C-2	10+02	MH
30" WW	C-3	18+03	MH
30" WW	C-3	24+27	MH
30" WW	C-3	25+35	MH
30" WW	C-3	25+99	MH
30" WW	C-4	26+63	MH
30" WW	C-4	27+63	MH
30" WW	C-4	28+63	MH
30" WW	C-4	30+46	MH
30" WW	C-4	31+75	MH
30" WW	C-4	33+63	MH
30" WW	C-5	36+38	MH
30" WW	C-5	39+13	MH
30" WW	C-5	41+95	MH
30" WW	C-6	44+33	MH
30" WW	C-6	47+13	MH
30" WW	C-6	48+63	MH
30" WW	C-7	50+54	MH
30" WW	C-7	52+66	MH
30" WW	C-7	54+66	MH
30" WW	C-7	56+91	MH
30" WW	C-8	60+12	MH
30" WW	C-8	65+40	MH
30" WW	C-9	69+91	MH
30" WW	C-10	74+91	MH
30" WW	C-10	77+82	MH
30" WW/24" WW	C-10	79+46	MH
24" WW	C-10	80+68	MH
24" WW	C-10	82+53	MH
24" WW	C-11	83+64	MH
24" WW	C-11	87+17	MH
36" WW	C-20	129+54	MH
36" WW	C-20	130+33	MH
15" WW	C-20	132+76	MH
15" WW	C-20	133+42	MH
15" WW	C-20	134+43	MH
15" WW	C-20	137+15	MH
15" WW	C-21	139+32	MH
15" WW	C-21	141+68	MH
15" WW	C-21	145+56	MH
15" WW	C-22	146+13	MH
15" WW	C-22	151+25	MH
15" WW	C-23	154+24	MH
15" WW	C-23	157+40	MH
15" WW	C-23	160+20	MH
15" WW	C-24	163+00	MH
15" WW	C-24	167+00	MH
15" WW	C-24	168+56	MH
15" WW	C-24	169+99	MH
15" WW	C-25	174+25	MH
15" WW	C-25	176+95	MH
15" WW	C-26	179+19	MH
15" WW	C-28	200+05	MH
15" WW	C-28	203+26	MH
15" WW	C-28	204+75	MH
15" WW	C-29	206+56	MH
15" WW	C-29	208+56	MH
15" WW	C-30	213+41	MH
15" WW	C-30	217+59	MH
15" WW	C-31	222+61	MH
15" WW	C-31	227+61	MH
15" WW	C-32	231+16	MH
15" WW	C-32	233+40	MH
15" WW	C-32	235+32	MH
15" WW	C-33	240+32	MH
15" WW	C-33	245+32	MH
15" WW	C-33	246+55	MH

Line	*Shown on Sheet*	*Station*	*Manhole or Clean-out?*
	Of		
	Of		
	Of		
	Of		

15. ☒ Manholes are installed at all Points of Curvature and Points of Termination of a sewer line.

16. ☒ The maximum spacing between manholes on this project for each pipe diameter is no greater than:

Pipe Diameter (inches)	Max. Manhole Spacing (feet)
6 - 15	500
16 - 30	800
36 - 48	1000
≥54	2000

☐ **Attachment C – Justification for Variance from Maximum Manhole Spacing**. The maximum spacing between manholes on this project (for each pipe diameter used) is greater than listed in the table above. A justification for any variance from the maximum spacing is attached, and must include a letter from the entity which will operate and maintain the system stating that it has the capability to maintain lines with manhole spacing greater than the allowed spacing.

17. ☒ All manholes will be monolithic, cast-in-place concrete.

☒ The use of pre-cast manholes is requested for this project. The manufacturer's specifications and construction drawings, showing the method of sealing the joints, are attached.

Please see Detail G on Sheet C-2 for the City of Georgetown Standard Detail for precast manhole and Standard Specifications

Site Plan Requirements

Items 18 - 25 must be included on the Site Plan.

18. ☒ The Site Plan must have a minimum scale of 1" = 400'.

Site Plan Scale: 1" = 40'.

19. ☒ The Site Plan must include the sewage collection system general layout, including manholes with station numbers, and sewer pipe stub outs (if any). Site plan must be overlain by topographic contour lines, using a contour interval of not greater than ten feet and showing the area within both the five-year floodplain and the 100-year floodplain of any drainage way.

20. Lateral stub-outs:

☐ The location of all lateral stub-outs are shown and labeled.

☒ No lateral stub-outs will be installed during the construction of this sewer collection system.

21. Location of existing and proposed water lines:

☐ The entire water distribution system for this project is shown and labeled.
☐ If not shown on the Site Plan, a Utility Plan is provided showing the entire water and sewer systems.
☒ There will be no water lines associated with this project.

22. 100-year floodplain:

☐ After construction is complete, no part of this project will be in or cross a 100-year floodplain, either naturally occurring or manmade. (Do not include streets or concrete-lined channels constructed above of sewer lines.)
☒ After construction is complete, all sections located within the 100-year floodplain will have water-tight manholes. These locations are listed in the table below and are shown and labeled on the Site Plan. (Do not include streets or concrete-lined channels constructed above sewer lines.)

Table 3 - 100-Year Floodplain

Line	***Sheet***	***Station***
See following page	of	to
	of	to
	of	to
	of	to

23. 5-year floodplain:

☐ After construction is complete, no part of this project will be in or cross a 5-year floodplain, either naturally occurring or man-made. (Do not include streets or concrete-lined channels constructed above sewer lines.)
☒ After construction is complete, all sections located within the 5-year floodplain will be encased in concrete or capped with concrete. These locations are listed in the table below and are shown and labeled on the Site Plan. (Do not include streets or concrete-lined channels constructed above sewer lines.)

Table 4 - 5-Year Floodplain

Line	***Sheet***	***Station***
18" FM	C-15 of C-33	119+50 to 120+00
12" FM	C-27 of C-33	190+30 to 191+23
	of	to
	of	to

24. ☒ Legal boundaries of the site are shown.

Table 3 - 100-year Floodplain

Line	Sheet	Station
30" WW	C-1	0+55 to 0+90
30" WW	C-1	0+90 to 2+02
30" WW	C-1	2+02 to 10+02
30" WW	C-2	10+02 to18+03
30" WW	C-3	18+03 to 24+27
30" WW	C-3	24+27 to 25+35
30" WW	C-3	25+35 to 25+41

25. ☒ The ***final plans and technical specifications*** are submitted for the TCEQ's review. Each sheet of the construction plans and specifications are dated, signed, and sealed by the Texas Licensed Professional Engineer responsible for the design on each sheet.

Items 26 - 33 must be included on the Plan and Profile sheets.

26. ☒ All existing or proposed water line crossings and any parallel water lines within 9 feet of sewer lines are listed in the table below. These lines must have the type of pressure rated pipe to be installed shown on the plan and profile sheets. Any request for a variance from the required pressure rated piping at crossings must include a variance approval from 30 TAC Chapter 290.

☐ There will be no water line crossings.
☐ There will be no water lines within 9 feet of proposed sewer lines.

Table 5 - Water Line Crossings

Line	*Station or Closest Point*	*Crossing or Parallel*	*Horizontal Separation Distance*	*Vertical Separation Distance*
30" WW	52+00	Crossing	N/A	5.5'
30" WW	76+00	Crossing	N/A	6'
30" WW	82+32	Crossing	N/A	2.13'
30" WW	82+40	Crossing	N/A	3.36'
42" Raw Water	245+76	Crossing	N/A	2'
4" Potable Water	245+78	Crossing	N/A	8.3'
24" Potable Water	246+24	Crossing	N/A	8'

27. Vented Manholes:

☐ **No part** of this sewer line is within the 100-year floodplain and vented manholes are not required by 30 TAC Chapter 217.
☒ **A portion** of this sewer line is within the 100-year floodplain and vented manholes will be provided at less than 1500 foot intervals. These water-tight manholes are listed in the table below and labeled on the appropriate profile sheets.
☐ **A portion** of this sewer line is within the 100-year floodplain and an alternative means of venting shall be provided at less than 1500 feet intervals. A description of the alternative means is described on the following page.
☐ **A portion** of this sewer line is within the 100-year floodplain; however, there is no interval longer than 1500 feet located within. No vented manholes will be used.

Table 6 - Vented Manholes

Line	*Manhole*	*Station*	*Sheet*
See following sheet			

Table 6 - Vented Manholes

Line	Manhole	Station	Sheet
30" WW	C00	0+55	C-1
30" WW	C01	0+90	C-1
30" WW	C02	2+02	C-1
30" WW	C03	10+02	C-2
30" WW	C04	18+03	C-3
30" WW	C05	24+27	C-3

Line	*Manhole*	*Station*	*Sheet*

28. Drop manholes:

☐ There are no drop manholes associated with this project.
☒ Sewer lines which enter new or existing manholes or "manhole structures" higher than 24 inches above the manhole invert are listed in the table below and labeled on the appropriate profile sheets. These lines meet the requirements of 30 TAC §217.55(l)(2)(H).

Table 7 - Drop Manholes

Line	*Manhole*	*Station*	*Sheet*
See following sheet			

29. Sewer line stub-outs (For proposed extensions):

☒ The placement and markings of all sewer line stub-outs are shown and labeled.
☐ No sewer line stub-outs are to be installed during the construction of this sewage collection system.

30. Lateral stub-outs (For proposed private service connections):

☐ The placement and markings of all lateral stub-outs are shown and labeled.
☒ No lateral stub-outs are to be installed during the construction of this sewage collection system.

31. Minimum flow velocity (From Appendix A)

☒ Assuming pipes are flowing full; all slopes are designed to produce flows equal to or greater than 2.0 feet per second for this system/line.

32. Maximum flow velocity/slopes (From Appendix A)

☒ Assuming pipes are flowing full, all slopes are designed to produce maximum flows of less than or equal to 10 feet per second for this system/line.
☐ **Attachment D – Calculations for Slopes for Flows Greater Than 10.0 Feet per Second.** Assuming pipes are flowing full, some slopes produce flows which are greater than 10 feet per second. These locations are listed in the table below. Calculations are attached.

Table 7 - Drop Manholes

Line	Manhole	Station	Sheet
30" WW	C07	25+99	C-3
30" WW	C09	27+63	C-4
30" WW	C10	28+63	C-4
30" WW	C11	30+46	C-4
30" WW	C12	31+75	C-4
30" WW	C13	33+63	C-4
30" WW	C14	36+38	C-5
30" WW	C18	47+13	C-6
30" WW	C19	48+63	C-6
30" WW	C20	60+54	C-7
30" WW	C21	52+66	C-7
30" WW	C22	54+66	C-7
30" WW	C23	56+91	C-7
36" WW	B03	132+76	C-20
15" WW	12A	157+40	C-23
15" WW	A04	203+26	C-28
15" WW	A04A	204+75	C-28
15" WW	A05	206+56	C-29
15" WW	A06	208+56	C-29
15" WW	A16	246+55	C-33

Table 8 - Flows Greater Than 10 Feet per Second

Line	*Profile Sheet*	*Station to Station*	*FPS*	*% Slope*	*Erosion/Shock Protection*

33. Assuming pipes are flowing full, where flows are ≥ 10 feet per second, the provisions noted below have been made to protect against pipe displacement by erosion and/or shock under 30 TAC §217.53(l)(2)(B).

☐ Concrete encasement shown on appropriate Plan and Profile sheets for the locations listed in the table above.

☐ Steel-reinforced, anchored concrete baffles/retards placed every 50 feet shown on appropriate Plan and Profile sheets for the locations listed in the table above.

☒ N/A

Administrative Information

34. ☒ The final plans and technical specifications are submitted for TCEQ review. Each sheet of the construction plans and specifications are dated, signed, and sealed by the Texas Licensed Professional Engineer responsible for the design on each sheet.

35. ☒ Standard details are shown on the detail sheets, which are dated, signed, and sealed by the Texas Licensed Professional Engineer, as listed in the table below:

Table 9 - Standard Details

Standard Details	*Shown on Sheet*
Lateral stub-out marking **[Required]**	C-20, -23, -28, -33 of C-33
Manhole, showing inverts comply with 30 TAC §217.55(l)(2) **[Required]**	CD-2 of CD-8
Alternate method of joining lateral to existing SCS line for potential future connections **[Required]**	N/A of
Typical trench cross-sections **[Required]**	CD-4 of CD-8
Bolted manholes **[Required]**	CD-3 of CD-8
Sewer Service lateral standard details **[Required]**	N/A of
Clean-out at end of line **[Required, if used]**	N/A of
Baffles or concrete encasement for shock/erosion protection **[Required, if flow velocity of any section of pipe >10 fps]**	N/A of
Detail showing Wastewater Line/Water Line Crossing **[Required, if crossings are proposed]**	CD-1 to CD-4

Standard Details	*Shown on Sheet*
Mandrel detail or specifications showing compliance with 30 TAC §217.57(b) and (c) **[Required, if Flexible Pipe is used]**	CD-5 of CD-8
Drop manholes **[Required, if a pipe entering a manhole is more than 24 inches above manhole invert]**	CD-2 of CD-8

36. ☒ All organized sewage collection system general construction notes (TCEQ-0596) are included on the construction plans for this sewage collection system.

37. ☒ All proposed sewer lines will be sufficiently surveyed/staked to allow an assessment prior to TCEQ executive director approval. If the alignments of the proposed sewer lines are not walkable on that date, the application will be deemed incomplete and returned.

    ☒ Survey staking was completed on this date: To be coordinated with TCEQ

38. ☒ Submit one (1) original and one (1) copy of the application, plus additional copies as needed for each affected incorporated city, groundwater conservation district, and county in which the project will be located. The TCEQ will distribute the additional copies to these jurisdictions. The copies must be submitted to the appropriate regional office.

39. ☒ Any modification of this SCS application will require TCEQ approval, prior to construction, and may require submission of a revised application, with appropriate fees.

Signature

To the best of my knowledge, the responses to this form accurately reflect all information requested concerning the proposed regulated activities and methods to protect the Edwards Aquifer. This **Organized Sewage Collection System Application** is hereby submitted for TCEQ review and executive director approval. The system was designed in accordance with the requirements of 30 TAC §213.5(c) and 30 TAC §217 and prepared by:

Print Name of Licensed Professional Engineer: Gerald S. Furrier

Date: 06/13/24

Place engineer's seal here:

Signature of Licensed Professional Engineer:

Appendix A-Flow Velocity Table

Flow Velocity (Flowing Full) All gravity sewer lines on the Edwards Aquifer Recharge Zone shall be designed and constructed with hydraulic slopes sufficient to give a velocity when flowing full of not less than 2.0 feet per second, and not greater than 10 feet per second. The grades shown in the following table are based on Manning's formula and an n factor of 0.013 and shall be the minimum and maximum acceptable slopes unless provisions are made otherwise.

Table 10 - Slope Velocity

Pipe Diameter(Inches)	*% Slope required for minimum flow velocity of 2.0 fps*	*% Slope which produces flow velocity of 10.0 fps*
6	0.50	12.35
8	0.33	8.40
10	0.25	6.23
12	0.20	4.88
15	0.15	3.62
18	0.11	2.83
21	0.09	2.30
24	0.08	1.93
27	0.06	1.65
30	0.055	1.43
33	0.05	1.26
36	0.045	1.12
39	0.04	1.01
>39	*	*

**For lines larger than 39 inches in diameter, the slope may be determined by Manning's formula (as shown below) to maintain a minimum velocity greater than 2.0 feet per second when flowing full and a maximum velocity less than 10 feet per second when flowing full.*

$$v = \frac{1.49}{n} \times R_h^{0.67} \times \sqrt{S}$$

Figure 1 - Manning's Formula

Where:

v = velocity (ft/sec)
n = Manning's roughness coefficient (0.013)
Rh = hydraulic radius (ft)
S = slope (ft/ft)

Appendix A – SCS Engineering Design Report

ENGINEER'S PRELIMINARY DESIGN REPORT

FOR THE

SOUTH LAKE TO SOUTH FORK WASTEWATER IMPROVEMENTS

Prepared For:

City of Georgetown, Texas

Prepared By:

CDM Smith
8310- 1 N Capital of Texas Highway , Suite 250
Austin, Texas 78731
(512) 346-1100
TBPE Firm No. F-3043

June 2024

STATE OF TEXAS
GERALD S. FURRIER
129811
LICENSED
PROFESSIONAL ENGINEER

06/18/2024

Table of Contents

1.0 Introduction 1

2.0 Service Areas 1

2.1 Overall Service Configuration 1

2.2 Extension of Service into Areas Not Currently Served 2

3.0 Pipe Design Criteria 2

3.1 Capacity/Flow Design 2

4.0 Pipeline Design Details 4

4.1 Flow Depth and Velocity Calculations 4

4.2 Manholes 5

4.3 Corrosion Potential and Odor Control 5

5.0 Proposed Lift Stations 6

5.1 Configuration and Sizing 6

5.1.1 Cedar Breaks Lift Station 6

5.1.2 D B Wood Lift Station 7

5.2 Gravity and Force Mains 8

5.3 Controls and Standby Power 8

6.0 Stakeholder Coordination 9

6.1 City of Georgetown 9

6.2 TxDOT 9

6.3 Electric Utilities 9

6.4 Permitting Agencies 9

7.0 Existing Interceptor and Wastewater Treatment Plant Capacity 10

8.0 Testing Requirements and Safety 11

8.1 Installation of Gravity Collection System Pipes and Manholes 11

8.2 Occupational Safety, Public Health, and Environmental Protection 11

8.3 Environmental Safety 11

9.0 Proposed Code Exceptions 11

APPENDIX A - SCHEMATIC OF THE PROPOSED WASTEWATER ALIGNMENT FROM SOUTH LAKE WTP TO THE SOUTH FORK WASTEWATER INTERCEPTOR

APPENDIX B - FULL PIPE CAPACITY AND PRELIMINARY DEPTH FOR EACH LINE SEGMENT ESTIMATED IN INFOWORKS ICM MODEL

APPENDIX C - CEDAR BREAKS LIFT STATION - DESIGN CALCULATIONS

APPENDIX D - D B WOOD LIFT STATION - DESIGN CALCULATIONS

1.0 Introduction

The purpose of this design report is to demonstrate that the proposed City of Georgetown – South Lake Water Treatment Plant (WTP) to South Fork (SF) Wastewater Interceptor project, hereafter called as S Lake to S Fork WW Improvements, complies with the Texas Commission on Environmental Quality (TCEQ) 30 TAC §217 Design Criteria for Domestic Wastewater Systems. The project includes construction of approximately 18,900 linear feet (LF) of gravity main and 7,055 LF of force main from the future South Lake WTP to connect to the existing South Fork Wastewater Interceptor (SFWI) located at the South Fork of the San Gabriel River. The flow from proposed wastewater interceptor will be discharged into the existing South Fork Interceptor.

All improvements proposed under this project are consistent with the Georgetown Utility Systems Wastewater Master Plan (WWMP) 2023 completed by CDM Smith in January 2023. The Master Plan details sequential improvements to wastewater collection, transfer, and treatment facilities which are necessary to meet City of Georgetown's anticipated growth over the next several decades. A copy of the City of Georgetown's Wastewater Systems Master Plan 2023 is available for review upon request.

2.0 Service Areas

2.1 Overall Service Configuration

Based on the most recent planning documents available from the City of Georgetown, ultimate buildout estimates of the wastewater flows were prepared for the Wastewater Master Plan 2023. The preliminary layout of the proposed pipeline segments and South Lake subcatchment populations contributing to each segment along the interceptor are shown in **Figure 1**.

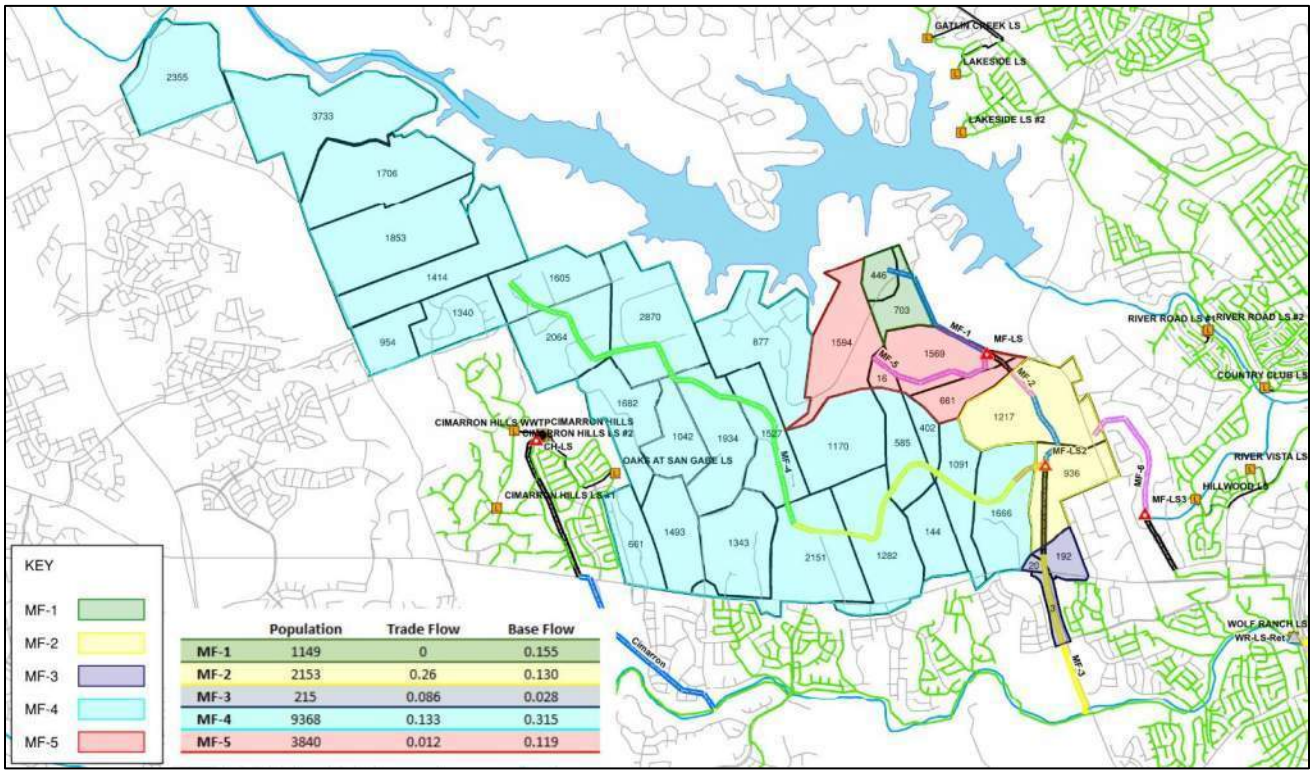

	Population	Trade Flow	Base Flow
MF-1	1149	0	0.155
MF-2	2153	0.26	0.130
MF-3	215	0.086	0.028
MF-4	9368	0.133	0.315
MF-5	3840	0.012	0.119

Figure 1 Preliminary Layout of Wastewater Segments and Subcatchment Populations

The service area of the proposed interceptor is projected to ultimately contain about 4,400 single family homes and 19,900 multi-family residential units, generating a total projected population of about 49,000 people within the 6,600-acre drainage basin. The service area is also projected to include a small amount of commercial property primarily composed of local retail and local office uses. A schematic of the proposed

wastewater alignment from South Lake WTP to SFWI is depicted in **Appendix A**. The land encompassing drainage basins served by MF-1, MF-2, MF-4, MF-5 is owned by Jim Avant & Jamie Deyhle & Wood Avant Investments, Ltd.

2.2 Extension of Service into Areas Not Currently Served

The proposed S Lake to S Fork WW wastewater interceptor is sized to accept and convey all projected flow generated within the natural drainage basin at full buildout based on the most current planning projections.

3.0 Pipe Design Criteria

3.1 Capacity/Flow Design

As shown in **Figure 1**, the proposed wastewater interceptor from South Lake WTP to the existing SFWI consists of three gravity pipeline segments (Segments MF-1, MF-2, and MF-3) and two force main sections (Segments MF-LS1 and MF-LS2). The gravity main sections MF-4 and MF-5 are not part of this project. The gravity pipeline segments MF-4 and MF-5 will discharge flows into the proposed wastewater interceptor in the future.

The Master Plan includes an InfoWorks ICM model of the city's wastewater collection system. The model is integrated with long-term planning data and has been calibrated using flow monitoring of both dry weather and wet weather conditions. The wastewater flow estimates used for design of the South Lake WTP to the existing SFWI were generated by the InfoWorks ICM model.

The wastewater average daily, peak dry weather, and peak wet weather flow estimates are provided in **Table 1**, which includes the 10-year, intermediate, and buildout model conditions. The flow estimates displayed are based on the population predictions within the area for each model condition. The 10-year model condition includes the planned development over the next decade that will contribute flows to the South Lake WTP to existing South Fork Interceptor. The buildout model condition includes the planned and proposed developments contributing to the South Lake WTP to SFWI.

Table 1: Flow Estimates Generated from the 2023 *InfoWorks ICM* model.

Average Daily Flow includes the 2 mgd averaged in RDII[3] assumes 1000 gpd/ac							
10-Year							
	MF-1	MF-5	MF-LS	MF-2	MF-4	MF-LS2	MF-3
Average Daily	0.83	0.01	0.85	1.01	0.14	1.15	1.15
Peak DWF	2.00	0.02	2.02	2.25	0.22	2.47	2.47
Peak WWF	0.00	0.03	0.03	0.42	1.47	1.83	1.85
Intermediate (20-Year)							
	MF-1	MF-5	MF-LS	MF-2	MF-4	MF-LS2	MF-3
Average Daily	0.98	0.59	1.61	2.15	1.76	3.91	3.99
Peak DWF[1]	2.25	1.00	3.30	4.19	2.88	7.07	7.20
Peak WWF[2]	0.32	1.27	1.67	2.82	4.67	7.48	7.66
Buildout							
	MF-1	MF-5	MF-LS	MF-2	MF-4	MF-LS2	MF-3
Average Daily	0.98	0.59	1.61	2.15	4.69	6.84	7.21
Peak DWF[1]	2.25	1.00	3.30	4.18	7.93	12.10	12.72
Peak WWF[2]	0.32	1.27	1.67	2.81	11.04	13.83	14.59

[1]DWF = Dry Weather Flow
[2]WWF = Wet Weather Flow
[3]RDII = Rainfall Derived Infiltration and Inflow

The filters at the South Lake WTP are rated to produce a maximum of 2 MGD, or 1,400 gallons per minute (gpm) of filter-to-waste flow. The filter-to-waste flow would only be discharged during dry weather flow (DWF) days. For this reason, the peak dry weather flows are greater than the peak wet weather flows for the pipeline segments (MF-1, MF-LS, MF-2, MF-LS, and MF-3) along the interceptor for both the 10-year and intermediate model conditions. The intermediate phase assumes development of the Avant property only. The ultimate buildout phase assumes development of the entire sewer service areas shown in Figure 1.

The maximum flow for the gravity line (MF-1) immediately downstream of the South Lake WTP, was estimated to be 2.0 MGD for the 10-year model condition and 2.25 MGD for both the intermediate and ultimate buildout model conditions. Pipeline Segment MF-1 therefore will be designed to convey 2.25 MGD.

Pipeline Segment MF-LS is a force main that conveys flows from Pipeline Segments MF-1 and MF-5 to Pipeline Segment MF-2. The maximum flow in Pipeline Segment MF-LS was estimated to be 3.3 MGD and will take place when the maximum flow from Segment MF-1 and the pumped flow from future Segment MF-5 occur simultaneously. Pipeline Segment MF-LS and the lift station upstream of pipeline segment will need to be sized to convey 3.3 MGD from Pipeline Segments MF-1 and MF-5 to Segment MF-2.

The maximum estimated flow for Pipeline Segment MF-2 was estimated to be 4.19 MGD during peak dry weather flow conditions. This flow includes the pumped flow from MF-LS in addition to flows contributing along the length of Pipeline Segment MF-2 during the future buildout model condition.

The estimated flow for Segment MF-LS2 increases from 7.07 MGD in the intermediate model condition to 13.83 MGD in the buildout condition. For this reason, the Lift Station structure serving MF-LS2 will be constructed to serve at least 13.83 MGD. Pump capacity will be installed incrementally over time as flows increase.

The maximum estimated flow for pipeline segment MF-3 was found to be 14.59 MGD for the buildout model condition.

4.0 Pipeline Design Details

4.1 Flow Depth and Velocity Calculations

The required size of the interceptor is dependent on the design flow, design criteria, pipe slope and pipe roughness. Consistent with TAC Chapter 217, Manning's formula was used to calculate hydraulic flow characteristics in each pipe segment assuming a roughness coefficient of 0.013 and the formula shown below.

$$v = \frac{1.49}{n} \times R_h^{0.67} \times \sqrt{S} \qquad (5)$$

where v = velocity (ft/sec)
n = Manning's roughness coefficient (0.013)
R_h = hydraulic radius (ft)
S = slope (ft/ft)

Based on the InfoWorks ICM Model, the calculated full pipe capacity and preliminary depth for each line segment is attached in **Appendix B**. Since the City of Georgetown has complied an *InfoWorks ICM* model calibrated specifically to the system, the flow estimates generated by the model were used for the hydraulic flow calculations.

Based on the population predictions and preliminary pipeline slopes, the minimum and maximum sizes of the proposed interceptor for each segment is shown in **Tables 2 and 3**. For areas with larger ground elevation changes, the pipeline slopes are not to exceed TCEQ's requirements for maximum pipeline slopes. Drop connections at manholes will be provided as needed. **Table 2** displays the maximum acceptable slopes for each pipeline segment, assuring velocities remain below 10 feet per second (fps) and for the projected maximum flow rates. **Table 3** displays the minimum acceptable slopes for each pipeline segment, assuring velocities are maintained above 2 fps and with the projected minimum flow rates.

Table 2 Maximum Pipeline Slopes

Pipeline Segment	Maximum Design Flow Rate (MGD)	Maximum TCEQ Allowable Slope (%)	Pipe Diameter (in.)	Q_{full} (MGD)	V_{full} (fps)	Maximum Design Velocity (fps)
MF-1	2.20	3.62	15	7.94	9.98	9.65
MF-5	1.27	8.40	8	2.25	9.98	9.77
MF-2	4.19	3.62	15	7.94	9.98	9.75
MF-4	11.04	1.87/1.65/ 1.12	24/27/36	20.25/25.62/44.88	9.97/9.97/9.82	9.97/9.97/9.8
MF-3	14.59	1.93/1.12	24/30	20.25/31.57	9.97/9.95	9.97/9.95

Table 3 Minimum Pipeline Slopes

Pipeline Segment	Minimum Design Flow Rate (MGD)	Minimum Slope (%)	Pipe Diameter (in.)	Q_{full} (MGD)	V_{full} (fps)	Minimum Design Velocity (fps)
MF-1	0.28	0.16	15	1.66	2.1	2.1
MF-5	0.02	0.42	8	0.51	2.24	2.24
MF-2	0.45	0.16	15	1.66	2.1	2.1
MF-4	0.137	0.1/0.08/0.66/ 0.06	24/27/36	4.6/4.64/15.24	2.28/2.2/3.34	2.28/2.2/3.34
MF-3	1.152	0.08/0.06	24/30	4.62/5.84	2.28/2.05	2.3/2.3

4.2 Manholes

Portions of the pipeline alignment lie within the 100-year floodplain. The proposed pipeline crosses the Middle Fork of the San Gabriel River and connect into the South Fork Interceptor, which runs parallel to the South Fork of the San Gabriel River. All proposed manholes within the 100-year floodplain will be bolted and gasketed. Manhole vents will be extended to an elevation 2' above the 100-year floodplain and augmented to prevent water entry in the event a rainfall event significantly exceeding a 100-year event occurs. The project plans will include manhole vents at maximum spacing of 1500 ft.

This project will utilize pre-cast & cast-in-place concrete manholes. Specifications and construction drawings, including the method to be used for sealing joints, will be provided in the construction drawings and specifications.

4.3 Corrosion Potential and Odor Control

PVC pipe conforming with ASTM D3034 and ASTM F679, or equivalent fiberglass pipe manufactured under ASTM D3262, will be used for gravity lines along the interceptor. All conventional concrete manholes will be coated with 80 mils of Raven 405 or other approved 100% solids epoxy to protect concrete and grout from corrosion. Pre-cast polymer concrete is inherently corrosion resistant and does not require a supplemental coating. All lift station wet wells will be coated with 80 mils of Raven 405 or other approved 100% solids epoxy. PVC or Ductile Iron lined with Protecto 401 Ceramic Epoxy Lining will be used for the force mains along the proposed interceptor alignment. Ductile iron fittings will be lined similar to ductile iron pipe.

Air intake vents (at manholes) are proposed to be installed at a maximum spacing of 1500 feet. The vents will allow oxygenated air to enter the interceptor system and diffuse into the flow stream through the water surface. All proposed pipe segments are anticipated to flow at less than 80 % full, providing a water surface area within the pipe through which to transfer oxygen. In addition, all proposed pipe segments, contain a minimum average dry weather flow velocity of above 2.0 feet per second, to help minimize the accumulation of odor-producing solids or biofilm within the pipe.

In addition, all proposed pipe segments have a minimum average dry weather flow velocity of at least 2.0 feet per second, preventing the accumulation of odor-producing solids within the pipe. The proposed South Lake WTP to SFWI line has a limited contributing flow area and relatively short flow detention times, so nuisance odors are not a concern for the initial and intermediate design years. As future sewer segments are constructed by others and nuisance odors are identified or become a concern, the City of Georgetown will implement odor control measures as needed.

4.4 Pipeline Structural Analysis

There are multiple parameters that go into determining the structural integrity of flexible pipe. The first parameter to consider is dead load and live load, which determine the loading (or pressure) exerted on buried pipe. Dead load (or vertical load) is determined using the prism load. Another important parameter for structural integrity is allowable buckling pressure. Pipe buckling is a localized failure of the pipe wall structure which results from insufficient pipe stiffness for an application. There are two different pipe stiffness (PS) values considered for this design – 72 and 115. Unconfined buckling pressure for this application is calculated as 37.6 lb/in^2 for 72 PS pipe and 60.1 lb/in^2 for 115 PS pipe.

The maximum height of cover for both 72 and 115 PS pipe is 378.4 and 478.4 ft, respectively. The design depth is significantly less than this maximum height, so the design depth for buckling is okay.

Another important parameter is the trench width, which is 12" plus the pipe outside diameter. This is determined by the standard detail and specifications for this project.

The pipe materials proposed for construction of the interceptor is flexible. Per TCEQ regulations, a maximum of 5% pipe deflection is allowed over the Edwards Aquifer Recharge Zone. Pipe deflection calculations were performed to determine the maximum deflection expected at various depths of cover. The long-term deflection is less than 5% and okay for this application.

4.5 Pipeline installation Methods

Open-cut method is proposed to be used to install the gravity lines MF-1, MF-2, and MF-3. The section of the 36" gravity line, before entering D B Wood LS, that crosses the Unnamed Creek will be installed using jack and bore trenchless construction method. The MF-LS2 segment under the Middle Fork of the San Gabriel River is proposed to be constructed using jack and bore trenchless methods. Under State Route 29, the wastewater pipeline is proposed to be constructed with jack and bore pipeline installation, using PVC with steel casing pipe.

5.0 Proposed Lift Stations

5.1 Configuration and Sizing

As mentioned in Section 4, the base model was developed for the WWMP 2023 and has since been updated to reflect proposed new developments and construction. The proposed South Lake WTP to the SFWI wastewater alignment has been identified as the most appropriate route to convey the WTP filter-to-waste and estimated wastewater flow within the 10-year and buildout models.

The new interceptor route was evaluated in both InfoWorks ICM and ArcGIS to account for topographic features and planned infrastructure. The gravity mains were sized to be at or below 80% full by depth for peak flow conditions at buildout and maintain a minimum of 1% slope. Wherever possible, interceptor depths greater than 8 ft were avoided to minimize additional construction cost for deep excavation. The force mains were sized to maintain a velocity greater than 2 feet per second (fps) but no greater than 10 fps.

5.1.1 Cedar Breaks Lift Station

The maximum flow for the gravity line (MF-1) immediately downstream of the South Lake WTP, was estimated to be 2.0 MGD for the 10-year model condition and 2.25 MGD for both the intermediate and ultimate buildout model conditions. The maximum flow in Pipeline Segment MF-LS was estimated to be 3.3 MGD and will take place when the maximum flow from Segment MF-1 and the pumped flow from future Segment MF-5 occur simultaneously. The Cedar Breaks Lift Station has been designed for pump capacity of 3.3 MGD. Detailed design calculations of the Cedar Breaks Lift Station are presented in **Attachment C**.

i. The wetwell sizing calculations are shown on *Page 1 of Attachment C*.

ii. Pump station calculations including system head and pump capacity curves, head loss calculations, and minimum and maximum static head C values for normal and peak operational conditions, pump operations, pump curve are shown on *Page 2 and 3 of Attachment C*.

iii. The 100-yr floodplain boundaries are shown on the site plans.

iv. All the pumps proposed for the Cedar Breaks lift station are constant speed and of the same size. Total lift station pumping capacity with one of the pumps off are shown on *Page 2 Attachment C*.

v. The proposed pumps are constant speed submersible pumps. The detailed specifications of the proposed pumps are provided in *Section 432513.11 Wet Pit Submersible Solids Handling Pumps*.

vi. A radar level system with backup float switch control is proposed for this project. The specifications are provided in *Section 406196 Process Control Descriptions*.

vii. Pump cycle times calculations are provided on *Page 4 of Attachment C*.

viii. For ventilation, 6" Gooseneck vents are provided as shown on *Sheet M-2 of the Construction Plans.*

ix. Minimum and maximum flow velocities for the force main are provided on *Page 6 of Attachment C*.

x. For lift station security, 8 feet tall fencecrete and gates with lock and chain are proposed which are shown on the site plans.

xi. Lift station emergency provisions and reliability – The details of the lift station emergency provisions and reliability are discussed under *Section 5.3 Controls and Standby Power* of this report.

5.1.2 D B Wood Lift Station

The D B Wood Lift Station structure serving MF-LS2 will be constructed to serve at least 13.83 MGD. Pump capacity will be installed incrementally over time as flows increase.

Detailed design calculations of the D B Wood Lift Station are presented in **Attachment D**.

i. The wetwell sizing calculations are shown on *Page 1 of Attachment D*.

ii. Pump station calculations including system head and pump capacity curves, head loss calculations, and minimum and maximum static head C values for normal and peak operational conditions, pump operations, pump curve are shown on *Page 2 and 3 of Attachment D*.

iii. The 100-yr floodplain boundaries are shown on the site plans.

iv. All the pumps proposed for the D B Wood Lift Station are constant speed and of the same size. Total lift station pumping capacity with one of the pumps off are shown on *Page 2 Attachment D*.

v. The proposed pumps are constant speed submersible pumps. The detailed specifications of the proposed pumps are provided in *Section 432513.11 Wet Pit Submersible Solids Handling Pumps*.

vi. A radar level system with backup float switch control is proposed for this project. The specifications are provided in *Section 406196 Process Control Descriptions*.

vii. Pump cycle times calculations are provided on *Page 4 of Attachment D*.

viii. For ventilation, 8" Gooseneck vents are provided as shown on the Construction Plans Sheet M-4.

ix. Minimum and maximum flow velocities for the force main are provided on *Page 6 of Attachment D*.

x. For lift station security, 8 feet tall fencecrete and gates with lock and chain are proposed which are shown on the site plans.

xi. Lift station emergency provisions and reliability – The details of the lift station emergency provisions and reliability are discussed under *Section 5.3 Controls and Standby Power* of this report.

5.2 Gravity and Force Mains

From the model analysis, the new interceptor will require a total of 18,900 linear feet (LF) of gravity main, 7,055 LF of force main, and two lift stations. A summary of the piping sizes, LF, and type needed are shown below in **Table 4**.

Table 4. Summary of Proposed Piping

Pipe Size (inches)	Gravity Main Length (ft)	Force Main Length (ft)
8	25	-
12	447	1,300
15	9,411	-
18	80	5,755
24	775	-
30	7,900	-
36	276	-
Total	18,914	7,055

The first lift station, deemed Crockett Falls (now called Cedar Breaks Lift Station) for this analysis, is located just downstream of the Crockett Falls interceptor. The second lift station, identified as D B Wood Lift Station for this analysis, is located on the northwest of intersection of D B Wood Road and Middle Fork of San Gabriel River.

5.3 Controls and Standby Power

The proposed lift stations include signs for each facility with a 24-hour emergency contact information. The lift stations will be equipped with an audiovisual alarm system and will transmit alarm conditions to monitoring staff via Supervisory Control and Data Acquisition (SCADA) system. The alarm system will automatically transmit warnings to SCADA during power outages, pump failures, and high-water levels, and other alarm conditions. Each lift station will be equipped with the pumps that operate automatically. The pumps will be designed to prevent surcharges in the collection system. A serge model has been used to analyze different scenarios and the maximum pressure obtained from the model was 128 psi. Therefore, the test pressure of at least 150 psi based on surge is recommended. Additional considerations for test pressure should include pump shut-off head, 1.5 times working pressure, and owner's standard test pressure. Per the findings of the surge analysis, 8" pressure relief valve with a set point of 130 psi and a 3" CAV throttled to 5% open (0.67" out) between the pump and check valve and along the 18" force main as shown in the attached plans is recommended. The 130-psi set pressure is recommended to avoid nuisance openings of the pressure relief valve during normal pump shut down. The surge model analysis conducted is based on the assumption that the constant speed pumps will be shut down one at a time with at least a 60 second delay between the shutdown of each pump and that each pump shut down will happen in about 5 seconds.

In addition to the pumps, the lift station will be equipped with wet well water level mechanism, radar water level system with backup float controls, electronic wet well level control system, and motor controls. The system will also include PLC for lockouts and other alarm conditions.

On-site standby diesel generators will be provided at each proposed lift station facility as an alternate power source. The diesel emergency engine generators will include mufflers/silencers and the enclosure will include acoustical insulation and acoustical enclosure ventilation louvers and fan discharge silencers as necessary to achieve reduced sound levels.

6.0 Stakeholder Coordination

6.1 City of Georgetown

The project will require coordination with the City of Georgetown (City) to acquire new land, easements, and to acquire required City permits including tree permit.

6.2 TxDOT

The project will require that new wastewater utilities cross State Highway 29 (SH-29 - West University Avenue). Crossings will be installed using trenchless methods to mitigate impacts to the TxDOT right-of-way. Jack and bore construction methods are proposed for crossing SH29. The design engineer will coordinate submission of Utility Installation Request form to the District Engineer for any new utility installations in an existing right-of-way.

Form 1082 Utility Installation Request (UIR) is used for new utility installations placed in right-of-way previously acquired by TxDOT for the State Highway System, as distinguished from existing, adjusted, or relocated installations. Approval of these new installations in the right-of-way is the responsibility of the Austin District, except for those installations on utility bridges, attachments to highway structures, or exceptions to the UIR. Once TxDOT reviews the submittal and requirements are met, TxDOT will send the executed approval back to the City of Georgetown.

6.3 Electric Utilities

The electric service to the Cedar Breaks Lift station will be provided by the Pedernales Electric Cooperative. The electric service to the D B Wood Lift station will be provided by the Georgetown Utility Systems. The proposed lift stations are in the vicinity of road right-of-way containing electric transmission and service lines.

6.4 Permitting Agencies

During the design and construction phase of the project, ENGINEER will prepare documentation for various permits, as needed, to comply with the federal, state, and local regulations. ENGINEER will coordinate with the city of Georgetown regarding permitting requirements and review and approval of the project for implementation. Following is a list of permitting agencies and a brief description of permitting process:

- U.S. Army of Corps of Engineers (USACE)

A jurisdictional waters of the United State (U.S.) assessment is performed, based on the Environmental Protection Agency's (EPA) and USACE Rapanos guidance, within 150-foot-wide corridor along the proposed wastewater interceptor and force main alignment. The purpose of this assessment is to identify the location and extent of areas deemed to be waters of the U.S. in accordance with Section 404 of the Clean Water Act. An environmental subconsultant performed an analysis using current and historical data, and perform soil surveys, and conduct appropriate field work necessary to identify the location and extent of USACE jurisdictional waters and potential wetlands within the ROW of the project area.

- U. S. Fish and Wildlife Service (USFWS)

An environmental subconsultant conducted a karst survey for the project area. The karst survey was conducted in accordance with the USFWS and Endangered Species Act guidelines for endangered karst species (EKS) and consists of a site investigation which includes pedestrian transects. USFWS karst survey protocols call for study of the impacts to the project area and a 345-foot study zone on either side of the project area. The proposed karst survey study area included an 840-foot-wide corridor along the alignment (150-foot easement plus 345 feet on either side). The findings are reported in a karst survey report.

- TCEQ, and other State Agencies

  - Cultural Resources Investigation: Environmental Subconsultant archeologists prepared a Texas Historical Commission (THC) permit application to perform a cultural resources survey of the 25,800-foot alignment in preparation for the installation of the proposed wastewater lines and associated two (2) lift stations. The investigation included a pedestrian survey, shovel testing, site revisits, site recording, site photography, preliminary archival research, National Register and State Antiquities Landmark eligibility assessments, data analysis, and report preparation in accordance with the THC and Council of Texas Archeologists (CTA) standards. The cultural Resource Investigation also includes Texas Historical Commission (THC) Antiquities Permit Application and cultural resources survey.

  - An Organized Sewage Collection System Plan (SCS) plan is prepared for this project which consists of a detailed plan that outlines best management practices that will be implemented in order to protect water quality when an organized SCS is constructed in the Edwards Aquifer recharge zone.

  - A Water Pollution Abatement Plan (WPAP) is prepared for this project and includes a detailed plan that outlines best management practices that will be implemented to protect water quality during construction in the Edwards Aquifer recharge zone.

- City of Georgetown

  - Spring Survey: Based on the field investigations of the Karst Survey, detailed report of the Springs Survey findings will be submitted to the city for compliance with the City of Georgetown Water Quality Ordinance.

7.0 Existing Interceptor and Wastewater Treatment Plant Capacity

As detailed in Section 1.0, all improvements proposed are consistent with the City of Georgetown's Wastewater System Master Plan 2023. The Master Plan details sequential improvements to wastewater collection, conveyance, and treatment facilities necessary to meet Georgetown's anticipated growth over the next several decades. The flow in the proposed interceptor will discharge to the existing SFWI. The WWMP 2023 has determined that the existing 36-in interceptor has sufficient capacity to accept the peak build-out flows from the proposed South Lake to South Fork interceptor.

The Master Plan 2023 includes specific projects to upgrade the capacity of the downstream conveyance and treatment systems to convey and treat buildout peak flows associated with this project. The City of Georgetown is currently selecting an engineering firm to design the proposed new 3 Fork Wastewater Treatment Facility.

8.0 Testing Requirements and Safety

8.1 Installation of Gravity Collection System Pipes and Manholes

Testing will be conducted in accordance with all City of Georgetown and TCEQ requirements. The TCEQ Organization Sewage Collection System General Construction Notes are included on the design drawings. All improvements will be certified to be in compliance with 30 TAC §217 prior to being placed into service. Project plans and specifications are configured to ensure that the pipe installation will adhere to minimum separation distances specified in 30 TAC §217.

The language in the plans or specifications shall ensure the separation distance between any unknown water line which are discovered during the installation phase of the project and the gravity sewer pipe which will be installed.

8.2 Occupational Safety, Public Health, and Environmental Protection

Trench protection will be provided for all trenches equal or greater than five (5) feet in depth. The Contractor is required to provide a Trench Safety System Plan designed by a Texas Licensed Professional Engineer that conforms with local, state and OSHA Standards. The contractor shall perform regular inspections of their pipe installation during construction, and they shall correct any deviations from the approved trench safety plan and correct any unsafe conditions that they discover prior to resuming work.

8.3 Environmental Safety

An Environmental study conducted to acquire and review available reports associated with previously conducted environmental surveys and assessments within the project area. This task includes reports available from the Texas Historical Commission (THC), Williamson County Conservation Foundation (WCCF), Texas Commission of Environmental Quality (TCEQ), and the Williamson County Regional Habitat Conservation Plan (Wilco RHCP). Review of the previously submitted documents will assist in determining areas of previous disturbance within the project area that will not require additional mitigation or other areas participating in state and/or county conservation plans.

Hazardous material screen will be done by conducting background research to identify the potential presence and negative impacts of hazardous materials in association with the project area.

9.0 Proposed Code Exceptions

There are currently no proposed exceptions to TCEQ 30 TAC §217 Design Criteria for Domestic Wastewater Systems for this project.

APPENDIX A

SCHEMATIC OF THE PROPOSED WASTEWATER ALIGNMENT FROM SOUTH LAKE WTP

TO THE SOUTH FORK WASTEWATER INTERCEPTOR

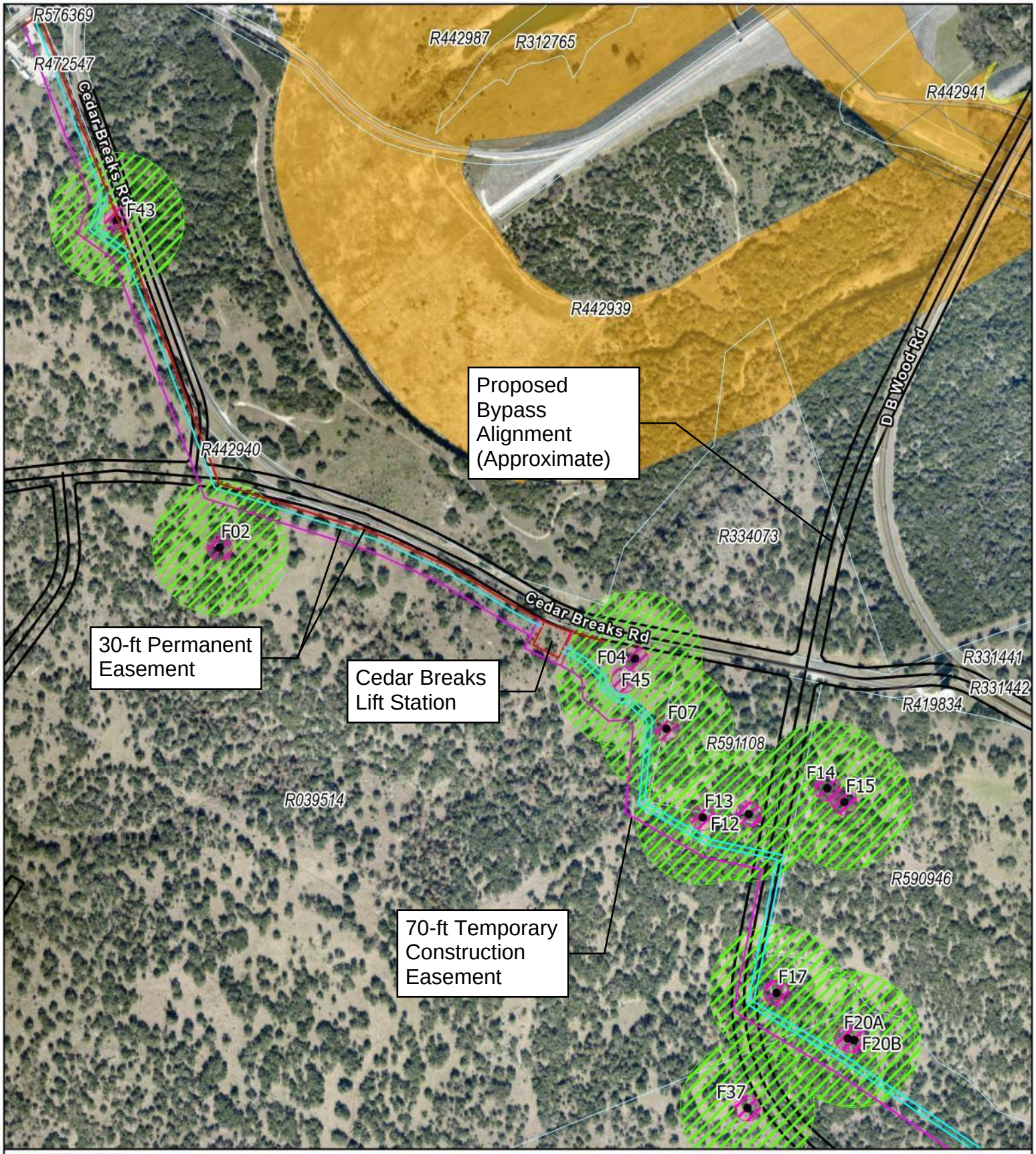

Existing Fencing
70ft. Temporary/Construction Easement
30ft. Permanent Easement
Approx. Feature Footprints
50ft. Buffer
345ft. Buffer
Prop Bypass Ext.
Parcels
500 Year Flood
100 Year Flood

South Lake to South Fork Wastewater Alignment

N

0 ¼ Miles

CDM Smith

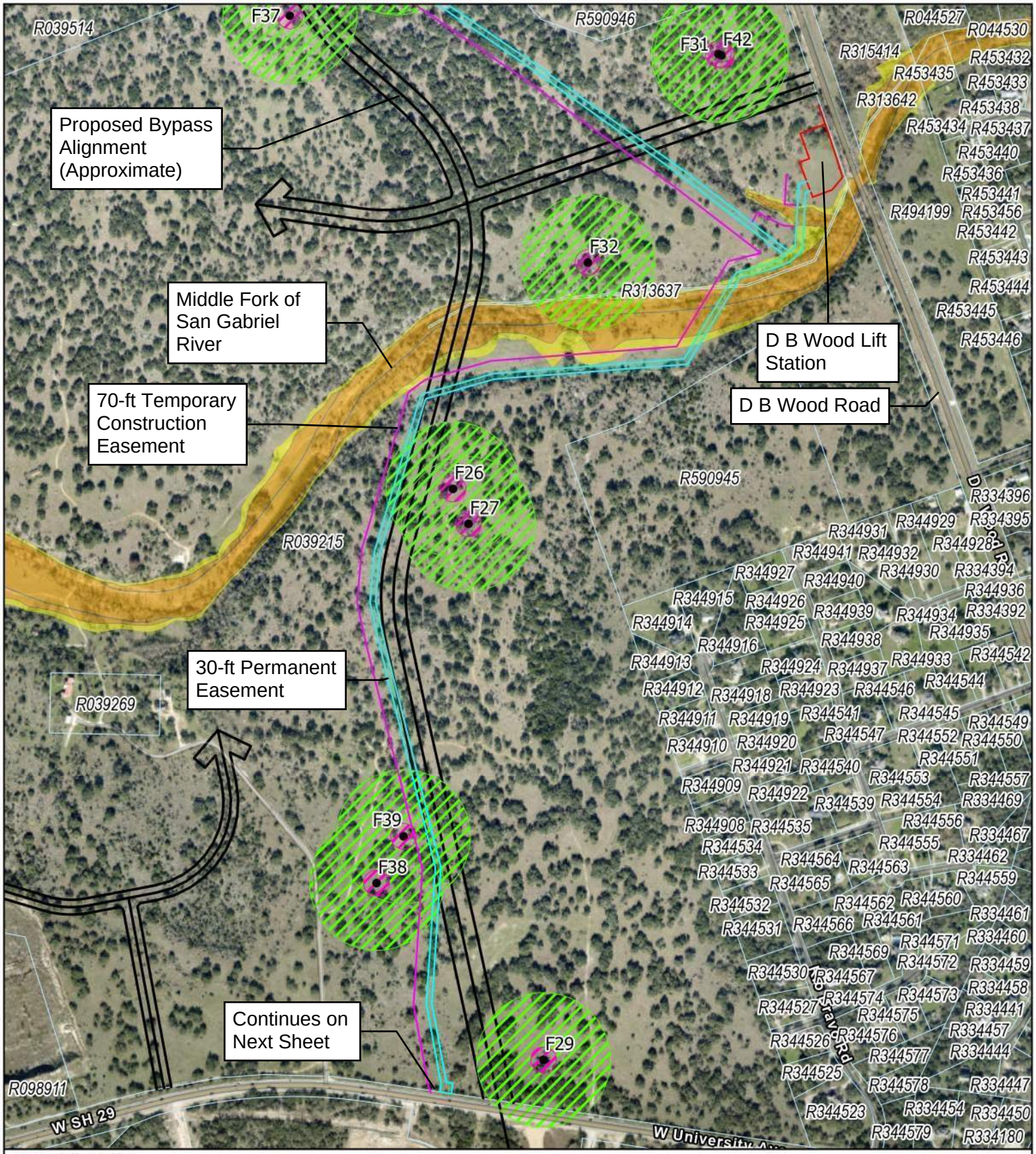

Existing Fencing
70ft. Temporary/Construction Easement
30ft. Permanent Easement
Approx. Feature Footprints
50ft. Buffer
345ft. Buffer
Prop Bypass Ext.
Parcels
500 Year Flood
100 Year Flood

South Lake to South Fork Wastewater Alignment

N

0 ¼ Miles

CDM Smith

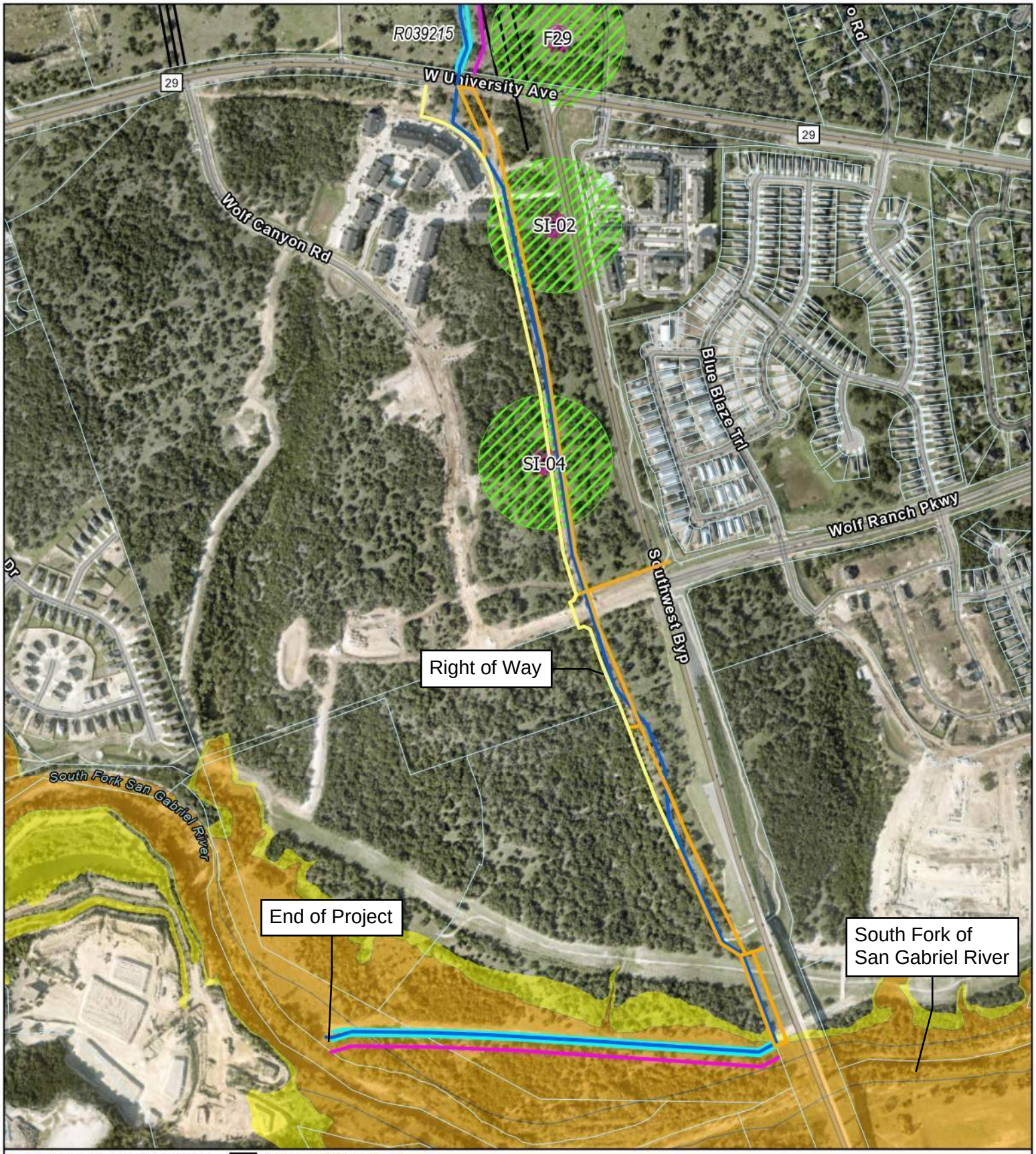

Proposed Wastewater Alignment
30ft. Permanent Easement
Temporary/Construction Easement
Limit of Disturbance
Right of Way
Prop Bypass Ext.
Approx. Feature Footprints
50ft. Buffer
345ft. Buffer
100 Year Flood
500 Year Flood
Parcels

South Lake to South Fork Wastewater Alignment

N

0 ¼ Miles

CDM Smith

APPENDIX B

FULL PIPE CAPACITY AND PRELIMINARY DEPTH FOR EACH LINE SEGMENT

ESTIMATED IN INFOWORKS ICM MODEL

Baseline A

Upstream MH	Downstream MH	Diameter, D (in)	Full pipe capacity (MGD)	Depth, d (ft)	Percentage Full, depth over Diameter (d/D)
A16	A15	15	2.55	0.066	0.05
A15	A14	15	2.51	0.066	0.05
A14	A13	15	2.51	0.095	0.08
A13	A12	15	2.52	0.175	0.16
A12	A11	15	2.50	0.175	0.16
A11	A10	15	2.53	0.175	0.16
A10	A09	15	2.51	0.199	0.16
A09	A08	15	2.50	0.271	0.24
A08	A07	15	2.52	0.271	0.24
A07	A06	15	7.95	0.205	0.16
A06	A05	15	7.93	0.206	0.16
A05	A04A	15	7.95	0.205	0.16
A04A	A04	15	7.33	0.211	0.17
A04	A03	15	7.40	0.210	0.17
A03	EXISTING	15	6.21	0.223	0.18

Baseline B

Upstream MH	Downstream MH	Diameter, D (in)	Full pipe capacity (MGD)	Depth, d (ft)	Percentage Full, depth over Diameter (d/D)
B20	B19	15	4.68	0.670	0.55
B19	B18	15	4.69	0.664	0.54
B18	B17	15	5.86	0.576	0.47
B17	B16	15	5.86	0.574	0.46
B16	B15	15	7.76	0.546	0.44
B15	B14	15	4.67	0.631	0.52
B14	B13	15	4.67	0.618	0.5
B13	B12A	15	4.67	0.609	0.49
B12A	B12	15	4.67	0.688	0.55
B12	B11	15	4.04	0.767	0.62
B11	B10	15	4.67	0.704	0.57
B10	B09	15	4.66	0.700	0.56
B09	B08	15	4.64	0.696	0.56
B08	B07	15	5.95	0.879	0.7
B07	B06	15	4.66	0.761	0.61
B06	B05	15	5.24	0.705	0.57
B05	B04	15	6.72	0.610	0.49
B04	B03	15	7.03	0.595	0.48
B03	B02	36	45.9	1.179	0.39
B02	B01	36	26.2	1.504	0.51

Baseline C

Upstream MH	Downstream MH	Diameter, D (in)	Full pipe capacity (MGD)	Depth, d (ft)	Percentage Full, depth over Diameter (d/D)
C34	C33	24	17.8	1.36	0.68
C33	C32	24	18.29	1.348	0.67
C32	C31	24	18.07	1.36	0.68
C31	C30	24	17.57	1.387	0.69
C30	C29	24	24.95	1.563	0.78
C29	C28	30	18.53	1.614	0.65
C28	C27	30	17.72	1.653	0.68
C27	C26	30	17.19	1.647	0.69
C26	C25	30	17.21	1.652	0.69
C25	C24	30	17.12	1.652	0.69
C24	C23	30	16.87	1.589	0.69
C23	C22	30	21.65	1.472	0.59
C22	C21	30	26.51	1.299	0.52
C21	C20	30	25.74	1.322	0.53
C20	C19	30	17.19	1.588	0.67
C19	C18	30	27.35	1.299	0.52
C18	C17	30	24.05	1.378	0.55
C17	C16	30	29.74	1.238	0.5
C16	C15	30	34.98	1.136	0.45
C15	C14	30	29.91	1.234	0.49
C14	C13	30	27.23	1.302	0.52
C13	C12	30	33.49	1.159	0.46
C12	C11	30	23.27	1.405	0.56
C11	C10	30	24.06	1.377	0.55
C10	C09	30	27.81	1.286	0.51
C09	C08	30	18.75	1.588	0.64
C08	C07	30	26.63	1.318	0.53
C07	C06	30	27.63	1.579	0.63
C06	C05	30	18.07	1.65	0.66
C05	C04	30	17.11	1.637	0.69
C04	C03	30	17.28	1.587	0.69
C03	C02	30	18.74	1.587	0.65
C02	C01	30	17.69	1.587	0.66
C01	C00	30	37.48	1.935	0.77

APPENDIX C

CEDAR BREAKS LIFT STATION

DESIGN CALCULATION

CLIENT City of Georgetown	JOB NO. 2048-272644	DATE 5/13/24
PROJECT South Lake WTP to Existing South Fork Interceptor	DATE CHECKED 5/23/24	COMPUTED BY MT
DETAIL Wetwell Check	CHECKED BY KD	

Hydraulics Institute Standards ANSI/HI 9.8-2018 Recommendations for Submersible Pump Stations

Appendix E – Aspects of design of rectangular wet wells for solids-bearing liquids (informative) — 2018

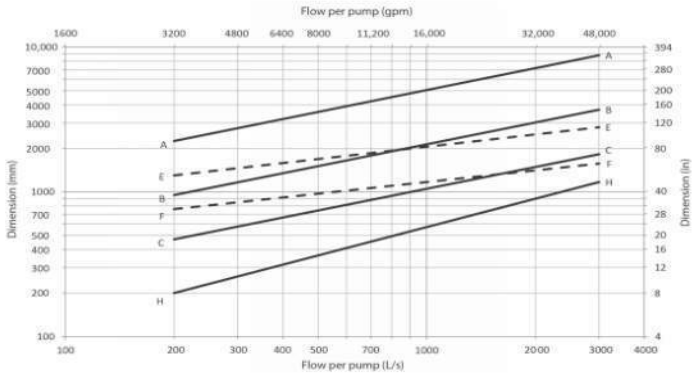

Figure E.7 Recommended sump dimensions

Taken from Flygt Sump Dimensions Table - Flygt Design Considerations

	Dimension (mm)					
Flow per pump (l/s)	H	C	F	B	E	A
200	200	480	760	960	1300	2250
1000	575	1050	1175	2170	2050	5000
3000	1180	1810	1580	3700	2800	8800

Convert to Imperial Units:

Flow per pump	Dimension (in)					
(gpm)	H	C	F	B	E	A
3170	7.9	18.9	29.9	37.8	51.2	88.6
15850	22.6	41.3	46.3	85.4	80.7	196.9
47551	46.5	71.3	62.2	145.7	110.2	346.5

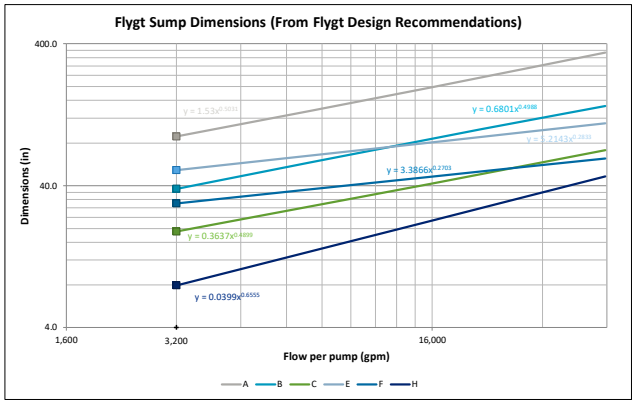

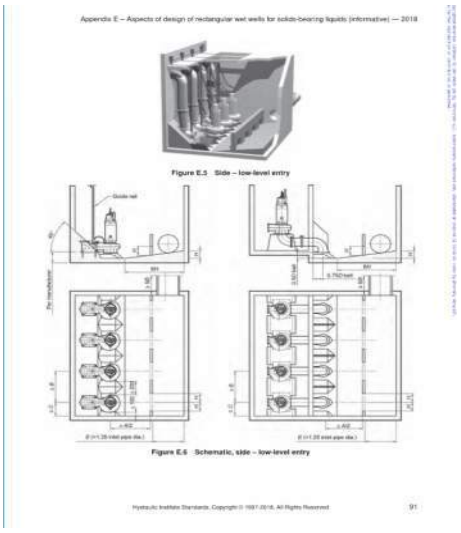
Appendix E – Aspects of design of rectangular wet wells for solids-bearing liquids (informative) — 2018

Figure E.5 Side – low-level entry

Figure E.6 Schematic, side – low-level entry

Volum = 1105

Flow Rate (gpm)	**3,200.00**	Check from HI 9.8
Flow Rate (ft3/sec)	**7.13**	Figure E.7:
A (in)	**88.74**	92.00
B (in)	**38.10**	38.00
C (in)	**18.96**	19.00
E (in)	**51.31**	54.00
F (in)	**30.01**	30.00
Discharge Connection (in)	**6.00**	
H (in)	**7.92**	8.00
No. of Pumps	**3**	

Note:
If per-pump flow rate is below 3,200 gpm, use 3,200 gpm for dimension sizing but no other calculations

Hydraulics Instititute/Flygt Standards			Did the Intake Pump Station Design meet the standards			
			USE		Yes	No
≥ A	88.74	in	90.00	in	X	
	7.40	ft	7.50	ft		
B	38.10	in	38.00	in	X	
	3.18	ft	3.17	ft		
C	18.96	in	19.00	in	X	
	1.58	ft	1.58	ft		
E	51.31	in	54.00	in	X	
	4.28	ft	4.50	ft		
H	7.92	in	8.00	in	X	
	0.66	ft	0.67	ft		
F	30.01	in	30.00	in	X	
	2.50	ft	2.50	ft		
Width	9.51	ft	9.5	ft	X	
Length	13.0	ft	13.0	ft	X	

Wetwell Dimensions		Use
Width	9.5 ft	10.00
Length	13.0 ft	13.0
Depth	4.0 ft	8.5

Notes:
Assumed ground elevation of 805 ft.
Assumed width needs to accommodate individual pump roof hatches.

Hatch Check:

Pump Lay Length (in) =	26.22
Pump Width (in) =	20.98
Hatch Width (ft) =	2.75
Hatch Length (ft) =	4
Width of Wet Well for Individual Hatches =	15.75

Note: see snip-it below for individual pump roof hatch layout from Church Road Lift Station

Distance from Pump CL to Flange CL from Pump Cut Sheet =	36.50
Distance Used for Pump CL to Flange CL:	60

Note: Used Long Radius DI Bend (see snip-it below)

Notes:

A - minimum value
B - round up
C - maximum value; do not alter
E, F, H - can be modified, but need to remain proportional to one another

CLIENT	City of Georgtown	JOB NO.	2048-272644	DATE	5/13/24
PROJECT	South Lake WTP to Existing South Fork Interceptor	DATE CHECKED	5/23/24	COMPUTED BY	MT
DETAIL	System Data	CHECKED BY	KD	SHEET NO.	4

Scenario Name: Scenario 1 - 1 Pump Operation

System Data - 5B Curve

	System Curve ID =	High Head	System Curve ID =	Design Head	System Curve ID =	Low Head	System Curve ID =	Not Used
	System Description:		System Description:		System Description:		System Description:	
	1 pump pumping from Pump Off elevation to gravity discharge location, assuming full pipe capacity		1 pump pumping from Lead Pump On elevation to gravity discharge location, assuming half full pipe capacity		1 pump pumping from Lag Pump On elevation to gravity discharge location at pipe invert		Brief description of system variables - suction and discharge elevations, flow rate, etc.	
	Model File Name:	Cedar Breaks Lift Station_MT edited.fth	Model File Name:	Cedar Breaks Lift Station_MT edited.fth	Model File Name:	Cedar Breaks Lift Station_MT edited.fth	Model File Name:	Model File Name
	Model Scenario:	High Head, 1 Pump	Model Scenario:	Design Head, 1 Pump	Model Scenario:	Low Head, 1 Pump	Model Scenario:	Model Scenario Name from Model File
	Suction WSE or HGL (ft) =	791.0	Suction WSE or HGL (ft) =	793.0	Suction WSE or HGL (ft) =	794.0	Suction WSE or HGL (ft) =	
	Discharge WSE or HGL (ft) =	841.0	Discharge WSE or HGL (ft) =	840.5	Discharge WSE or HGL (ft) =	840.0	Discharge WSE or HGL (ft) =	
	Static Head (ft) =	50.0	Static Head (ft) =	47.5	Static Head (ft) =	46.0	Static Head (ft) =	0.0
	Pipe Friction Coefficient =	120	Pipe Friction Coefficient =	120	Pipe Friction Coefficient =	140	Pipe Friction Coefficient =	
	Flow from model (gpm) =	1,146	Flow from model (gpm) =	1,146	Flow from model (gpm) =	1,146	Flow from model (gpm) =	
	TH from Model (ft) =	63.9	TH from Model (ft) =	61.4	TH from Model (ft) =	58.0	TH from Model (ft) =	
	Friction Head (Hf) =	13.9	Friction Head (Hf) =	13.9	Friction Head (Hf) =	12.0	Friction Head (Hf) =	0.0
Percent of Modeled Flow	**Flow (gpm)**	**Head (ft)**	**Flow (gpm)**	**Head (ft)**	**Flow (gpm)**	**Head (ft)**	**Flow (gpm)**	**Head (ft)**
0%	0	50	0	48	0	46	0	#DIV/0!
15%	172	50	172	48	172	46	0	#DIV/0!
30%	344	51	344	49	344	47	0	#DIV/0!
45%	516	53	516	51	516	49	0	#DIV/0!
60%	688	55	688	53	688	51	0	#DIV/0!
75%	860	58	860	56	860	53	0	#DIV/0!
90%	1031	61	1031	59	1031	56	0	#DIV/0!
105%	1203	65	1203	63	1203	59	0	#DIV/0!
120%	1375	69	1375	67	1375	63	0	#DIV/0!
135%	1547	74	1547	72	1547	67	0	#DIV/0!
150%	1719	79	1719	77	1719	71	0	#DIV/0!
165%	1891	85	1891	83	1891	76	0	#DIV/0!
180%	2063	91	2063	89	2063	82	0	#DIV/0!
185%	2120	93	2120	91	2120	84	0	#DIV/0!

Scenario Name: Scenario 2 - 2 Pump Operation

System Data - 5D Curve

	System Curve ID =	High Head	System Curve ID =	Design Head	System Curve ID =	Low Head	System Curve ID =	Not Used
	System Description:		System Description:		System Description:		System Description:	
	2 pumps pumping from lag pump off water surface elevation to gravity discharge location, assuming full pipe capacity		2 pumps pumping from Lag Pump On elevation to gravity discharge location, assuming half full pipe capacity		2 pumps pumping from High Level Alarm elevation to gravity discharge location at pipe invert			
	Model File Name:	Cedar Breaks Lift Station_MT edited.fth	Model File Name:	Cedar Breaks Lift Station_MT edited.fth	Model File Name:	Cedar Breaks Lift Station_MT edited.fth	Model File Name:	
	Model Scenario:	High Head, 2 Pumps	Model Scenario:	Design Head, 2 Pumps	Model Scenario:	Low Head, 2 Pumps	Model Scenario:	
	Suction WSE or HGL (ft) =	792.0	Suction WSE or HGL (ft) =	794.0	Suction WSE or HGL (ft) =	795.0	Suction WSE or HGL (ft) =	
	Discharge WSE or HGL (ft) =	841.0	Discharge WSE or HGL (ft) =	840.5	Discharge WSE or HGL (ft) =	840.0	Discharge WSE or HGL (ft) =	
	Static Head (ft) =	49.0	Static Head (ft) =	46.5	Static Head (ft) =	45.0	Static Head (ft) =	0.0
	Pipe Friction Coefficient =	120	Pipe Friction Coefficient =	120	Pipe Friction Coefficient =	140	Pipe Friction Coefficient =	
	Flow from model (gpm) =	2,292	Flow from model (gpm) =	2,292	Flow from model (gpm) =	2,292	Flow from model (gpm) =	
	TH from Model (ft) =	82.9	TH from Model (ft) =	80.2	TH from Model (ft) =	73.2	TH from Model (ft) =	
	Friction Head (Hf) =	33.9	Friction Head (Hf) =	33.7	Friction Head (Hf) =	28.2	Friction Head (Hf) =	0.0
Percent of Modeled Flow	**Flow (gpm)**	**Head (ft)**	**Flow (gpm)**	**Head (ft)**	**Flow (gpm)**	**Head (ft)**	**Flow (gpm)**	**Head (ft)**
0%	0	49	0	47	0	45	0	#DIV/0!
10%	229	49	229	47	229	45	0	#DIV/0!
20%	458	51	458	48	458	46	0	#DIV/0!
30%	688	53	688	50	688	48	0	#DIV/0!
40%	917	55	917	53	917	50	0	#DIV/0!
50%	1146	58	1146	56	1146	53	0	#DIV/0!
60%	1375	62	1375	60	1375	56	0	#DIV/0!
70%	1604	67	1604	64	1604	60	0	#DIV/0!
80%	1834	71	1834	69	1834	64	0	#DIV/0!
90%	2063	77	2063	74	2063	68	0	#DIV/0!
100%	2292	83	2292	80	2292	73	0	#DIV/0!
115%	2636	93	2636	90	2636	82	0	#DIV/0!
130%	2980	104	2980	101	2980	91	0	#DIV/0!
150%	3438	121	3438	118	3438	105	0	#DIV/0!

Cedar Breaks Lift Station

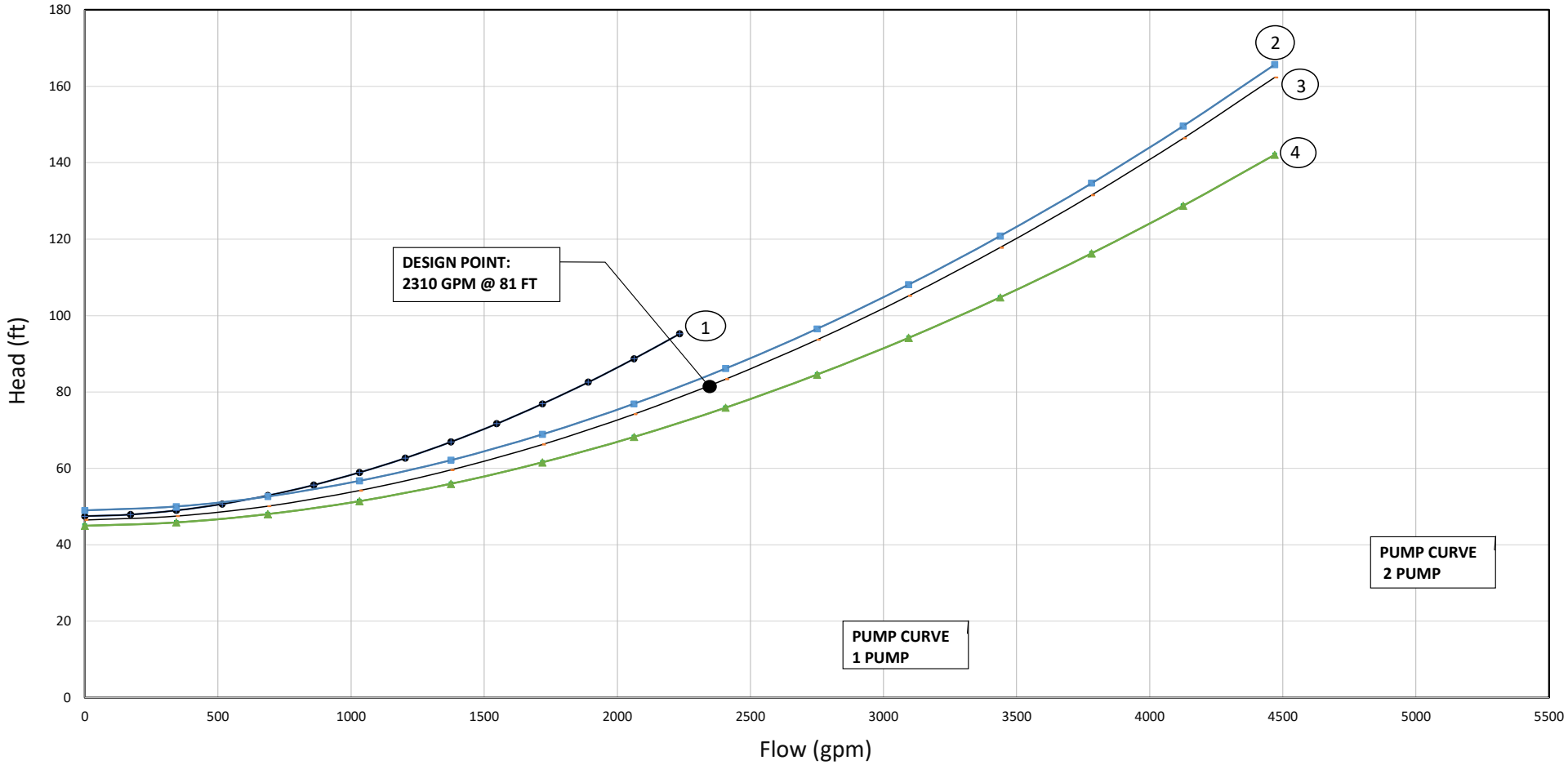

1 One Pump Operating Design Head System Curve C=120

2 Two Pumps Operating High Head System Curve C=120

3 Two Pumps Operating Design Head System Curve C = 120

4 Two Pumps Operating Low Head System Curve C =140

CLIENT	City of Georgetown	JOB NO.	2048-272644	DATE	5/13/24
PROJECT	South Lake WTP to Existing South Fork Interceptor	DATE CHECKED	5/23/24	COMPUTED BY	MT
DETAIL	Wetwell Elevation	CHECKED BY	KD		

For Constant Speed Operation

Pump Cycle Volume

Square Wetwell:

Maximum Starts Per Hour	6	
Minimum Cycle Time	10	min
Pump Station Max Flow at Min Speed	1,042	gpm
Requried Storage Volume	2,604	gal
Wetwell Length	14.00	ft
Wetwell Width	14.00	ft
Wet Well Area	196	ft^2
Storage Volume Per Foot	1,466	gal/ft
Wet Well Stage Need	1.78	ft

Figure: 30 TAC §217.60(b)(8)

Equation C.4.

$$V = \frac{T \times Q}{4 \times 7.48}$$

Where:

V = Active volume (cubic feet)

Q = Pump capacity (gallons per minute)

T = Cycle time (minutes)

7.48 = Conversion factor (gallons/cubic foot)

	Calculated		Use		
Gravity Influent Invert	796.00				
High Level Alarm	796.50	ft	796.50	ft	
Lag Pump On	795.50	ft	795.50	ft	
Lead Pump On	795.00	ft	795.00	ft	
Lag Pump Off	793.72	ft	793.50	ft	Stagger pump off since constant speed,
Lead Pump Off	793.22	ft	793.00	ft	lead pump will stay on
Low Level Alarm	792.72	ft	792.50	ft	
Minimum Submergence El	790.44	ft	789.50	ft	Confirm with pump selections.
Station Invert	788.72	ft	788.50	ft	(From pump manufactirere)
Minimum Submergence	2.78	ft			
Low Level Alarm Above Minimum Submergence El?			YES		

DUCTILE IRON FLANGED FITTINGS

ANSI/AWWA-C110/A21.10 Standard

LONG RADIUS BASE ELBOWS

For Pressure Ratings and For Drilling Template See Page 55

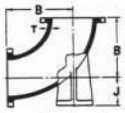

Straight Long Radius Base Elbows
DIMENSIONS AND WEIGHTS

Nominal Pipe Size Inches	Dimension T Inches	Dimension B Inches	Dimension J* Inches	Approximate Weight Pounds	Nominal Pipe Size Inches	Dimension T Inches	Dimension B Inches	Dimension J* Inches	Approximate Weight Pounds
3	.38	7.75	4.88	50	14	.88	21.50	12.50	570
4	.50	9.00	5.50	70	16	1.00	24.00	13.75	710
6	.56	11.50	7.00	115	18	1.06	26.50	15.00	900
8	.63	14.00	8.38	195	20	1.12	29.00	16.00	1125
10	.75	16.50	9.75	315	24	1.25	34.00	18.50	1715
12	.81	19.00	11.25	450	...	...	...	...	...

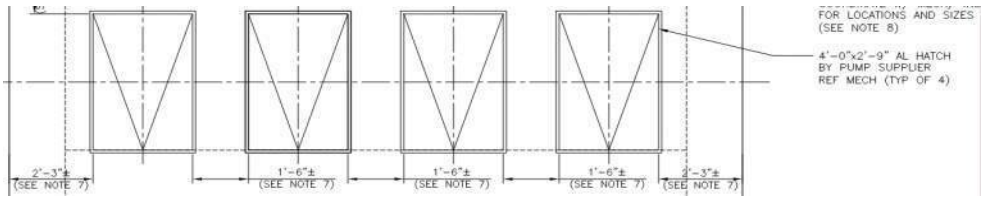

Minimum and Maximum Flow Velocities for Force Main

Pump Station	Nominal Pipe Size (in)	Pipe Inner Diameter	Min Flow Rate (gpm)	Max Flow Rate (gpm)	Min. Velocity (fps)	Max. Velocity (fps)
Cedar Breaks	12	11.294	1,146	2292	3.7	7.3
D B Wood Phase 1	18	16.14	2750	4050	4.3	6.4
D B Wood Future	20	17.814	2750	7100	3.5	9.1

APPENDIX D

D B WOOD LIFT STATION

DESIGN CALCULATION

CLIENT City of Georgetown	JOB NO. 2048-272644	DATE 9/28/23
PROJECT Cedar Breaks and D B Wood Lift Station	DATE CHECKED 5/23/24	COMPUTED BY MT
DETAIL Wetwell Check	CHECKED BY KD	

Hydraulics Institute Standards ANSI/HI 9.8-2018 Recommendations for Submersible Pump Stations

Appendix E – Aspects of design of rectangular wet wells for solids-bearing liquids (informative) — 2018

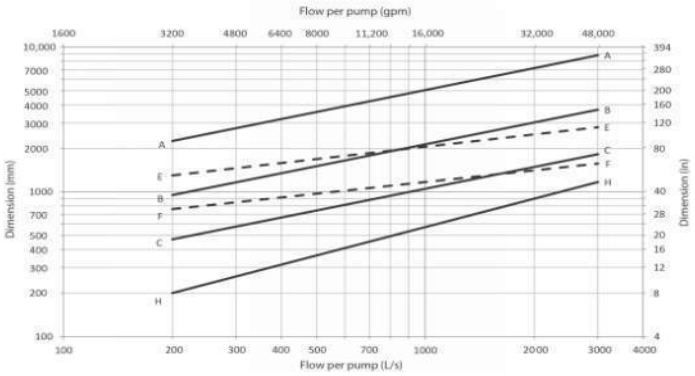

Figure E.7 Recommended sump dimensions

Taken from Flygt Sump Dimensions Table - Flygt Design Considerations

	Dimension (mm)					
Flow per pump (l/s)	H	C	F	B	E	A
200	200	480	760	960	1300	2250
1000	575	1050	1175	2170	2050	5000
3000	1180	1810	1580	3700	2800	8800

Convert to Imperial Units:

Flow per pump	Dimension (in)					
(gpm)	H	C	F	B	E	A
3170	7.9	18.9	29.9	37.8	51.2	88.6
15850	22.6	41.3	46.3	85.4	80.7	196.9
47551	46.5	71.3	62.2	145.7	110.2	346.5

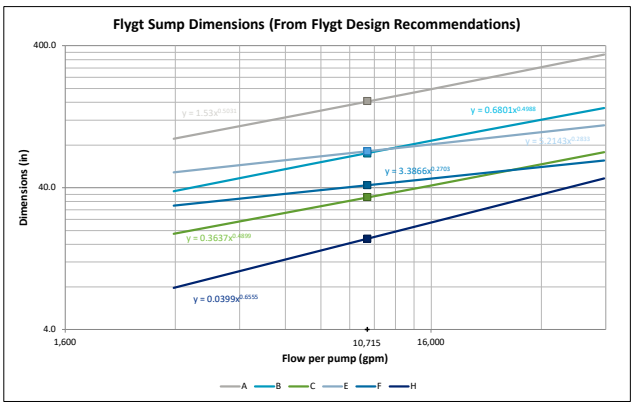

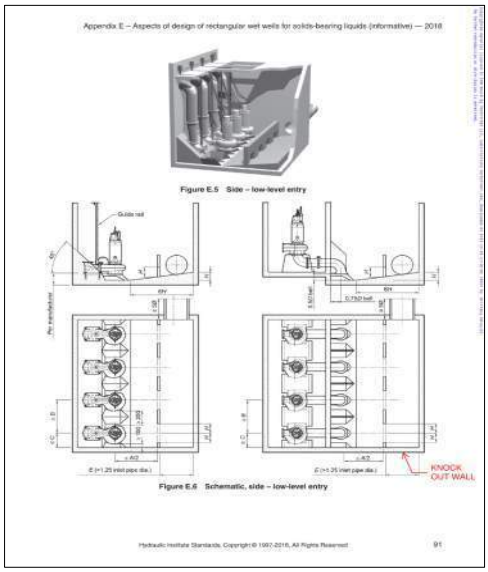

17

		Check from HI 9.8
Flow Rate (gpm)	**10,715.00**	Figure E.7:
Flow Rate (ft3/sec)	**23.87**	
A (in)	**163.00**	160.00
B (in)	**69.62**	70.00
C (in)	**34.28**	34.00
E (in)	**72.26**	75.00
F (in)	**41.60**	40.00
Discharge Connection (in)	10.00	
H (in)	**17.48**	16.00
No. of Pumps	**6**	

Note:
If per-pump flow rate is below 3,200 gpm, use 3,200 gpm for dimension sizing but no other calculations

Distance from Pump CL to Flange CL from Pump Cut Sheet = 65
Distance Used for Pump CL to Flange CL: 72
Note: Used Long Radius DI Bend

Hydraulics Institutite/Flygt Standards			Did the Intake Pump Station Design meet the standards			
			USE		Yes	No
≥ A	163.00	in	165.00	in	X	
	13.58	ft	13.75	ft		
B	69.62	in	70.00	in	X	
	5.80	ft	5.83	ft		
C	34.28	in	34.00	in	X	
	2.86	ft	2.83	ft		
E	72.26	in	73.00	in	X	
	6.02	ft	6.08	ft		
H	17.48	in	17.50	in	X	
	1.46	ft	1.46	ft		
F	41.60	in	40.00	in	X	
	3.47	ft	3.33	ft		
Width	34.72	ft	34.8	ft	X	
Length	18.81	ft	18.96	ft	X	

Notes:

A - minimum value
B - round up
C - maximum value; do not alter
E, F, H - can be modified, but need to remain proportional to one another

Wetwell Dimensions		Use
Width	34.8 ft	35
Length	19.0 ft	19.0
Depth	730.0 ft	37.5

Notes:
Assumed ground elevation of 810 ft.

Hatch Check:
Pump Lay Length (in) = 84 7
Pump Width (in) = 36 3
Hatch Width (ft) = 3
Hatch Length (ft) = 7
Width of Wet Well for Individual Hatches = 16.5

CDM Smith	CLIENT	City of Georgtown	JOB NO.	2048-272644	DATE 9/28/23
	PROJECT	Cedar Breaks and D B Wood Lift Station	DATE CHECKED	5/23/24	COMPUTED BY MT
	DETAIL	System Data	CHECKED BY	KD	SHEET NO. 4

Scenario Name: Scenario 1 - 1 Pump Operation

System Data - 5B Curve

	System Curve ID =	High Head	System Curve ID =	Design Head	System Curve ID =	Low Head	System Curve ID =	Not Used
	System Description:		System Description:		System Description:		System Description:	
	1 pump pumping from Pump Off elevation to gravity discharge location, assuming full pipe capacity		1 pump pumping from Lead Pump On elevation to gravity discharge location, assuming half full pipe capacity		1 pump pumping from Lag Pump On elevation to gravity discharge location at pipe invert		Brief description of system variables - suction and discharge elevations, flow rate, etc.	
	Model File Name:	Middle Fork Lift Station.fth	Model File Name:	Middle Fork Lift Station.fth	Model File Name:	Middle Fork Lift Station.fth	Model File Name:	Model File Name
	Model Scenario:	High Head, 1 Pump	Model Scenario:	Design Head, 1 Pump	Model Scenario:	Low Head, 1 Pump	Model Scenario:	Model Scenario Name from Model File
	Suction WSE or HGL (ft) =	735.0	Suction WSE or HGL (ft) =	736.0	Suction WSE or HGL (ft) =	737.0	Suction WSE or HGL (ft) =	
	Discharge WSE or HGL (ft) =	899.0	Discharge WSE or HGL (ft) =	898.5	Discharge WSE or HGL (ft) =	897.5	Discharge WSE or HGL (ft) =	
	Static Head (ft) =	164.0	Static Head (ft) =	162.5	Static Head (ft) =	160.5	Static Head (ft) =	0.0
	Pipe Friction Coefficient =	120	Pipe Friction Coefficient =	120	Pipe Friction Coefficient =	140	Pipe Friction Coefficient =	
	Flow from model (gpm) =	2,000	Flow from model (gpm) =	2,000	Flow from model (gpm) =	2,000	Flow from model (gpm) =	
	TH from Model (ft) =	189.9	TH from Model (ft) =	188.4	TH from Model (ft) =	182.2	TH from Model (ft) =	
	Friction Head (Hf) =	25.9	Friction Head (Hf) =	25.9	Friction Head (Hf) =	21.7	Friction Head (Hf) =	0.0
Percent of Modeled Flow	**Flow (gpm)**	**Head (ft)**	**Flow (gpm)**	**Head (ft)**	**Flow (gpm)**	**Head (ft)**	**Flow (gpm)**	**Head (ft)**
0%	0	164	0	163	0	161	0	#DIV/0!
20%	400	165	400	164	400	162	0	#DIV/0!
30%	600	167	600	165	600	163	0	#DIV/0!
45%	900	170	900	168	900	165	0	#DIV/0!
60%	1200	174	1200	173	1200	169	0	#DIV/0!
75%	1500	179	1500	178	1500	173	0	#DIV/0!
90%	1800	185	1800	184	1800	178	0	#DIV/0!
105%	2100	192	2100	191	2100	184	0	#DIV/0!
120%	2400	200	2400	199	2400	191	0	#DIV/0!
135%	2700	209	2700	208	2700	198	0	#DIV/0!
150%	3000	219	3000	217	3000	206	0	#DIV/0!
165%	3300	229	3300	228	3300	215	0	#DIV/0!
180%	3600	241	3600	239	3600	225	0	#DIV/0!
195%	3900	253	3900	252	3900	235	0	#DIV/0!

Scenario Name: Scenario 2 - 2 Pump Operation

System Data - 5D Curve

	System Curve ID =	High Head	System Curve ID =	Design Head	System Curve ID =	Low Head	System Curve ID =	Not Used
	System Description:		System Description:		System Description:		System Description:	
	2 pumps pumping from Pump 1 On elevation to gravity discharge location, assuming full pipe capacity		2 pumps pumping from Lag Pump 2 On elevation to gravity discharge location, assuming half full pipe capacity		2 pumps pumping from Pump 3 On elevation to gravity discharge location at pipe invert			
	Model File Name:	Middle Fork Lift Station.fth	Model File Name:	Middle Fork Lift Station.fth	Model File Name:	Middle Fork Lift Station.fth	Model File Name:	
	Model Scenario:	High Head, 2 Pumps	Model Scenario:	Design Head, 2 Pumps	Model Scenario:	Low Head, 2 Pumps	Model Scenario:	
	Suction WSE or HGL (ft) =	736.0	Suction WSE or HGL (ft) =	737.0	Suction WSE or HGL (ft) =	738.0	Suction WSE or HGL (ft) =	
	Discharge WSE or HGL (ft) =	899.0	Discharge WSE or HGL (ft) =	898.5	Discharge WSE or HGL (ft) =	897.5	Discharge WSE or HGL (ft) =	
	Static Head (ft) =	163.0	Static Head (ft) =	161.5	Static Head (ft) =	159.5	Static Head (ft) =	0.0
	Pipe Friction Coefficient =	120	Pipe Friction Coefficient =	120	Pipe Friction Coefficient =	140	Pipe Friction Coefficient =	
	Flow from model (gpm) =	4,000	Flow from model (gpm) =	4,000	Flow from model (gpm) =	4,000	Flow from model (gpm) =	
	TH from Model (ft) =	232.7	TH from Model (ft) =	231.2	TH from Model (ft) =	214.6	TH from Model (ft) =	
	Friction Head (Hf) =	69.7	Friction Head (Hf) =	69.7	Friction Head (Hf) =	55.1	Friction Head (Hf) =	0.0
Percent of Modeled Flow	**Flow (gpm)**	**Head (ft)**	**Flow (gpm)**	**Head (ft)**	**Flow (gpm)**	**Head (ft)**	**Flow (gpm)**	**Head (ft)**
0%	0	163	0	162	0	160	0	#DIV/0!
10%	400	164	400	162	400	160	0	#DIV/0!
15%	600	165	600	164	600	161	0	#DIV/0!
23%	900	167	900	166	900	163	0	#DIV/0!
30%	1200	171	1200	169	1200	165	0	#DIV/0!
38%	1500	174	1500	173	1500	168	0	#DIV/0!
45%	1800	179	1800	177	1800	172	0	#DIV/0!
53%	2100	184	2100	183	2100	176	0	#DIV/0!
68%	2700	197	2700	195	2700	186	0	#DIV/0!
75%	3000	204	3000	202	3000	192	0	#DIV/0!
83%	3300	212	3300	210	3300	198	0	#DIV/0!
90%	3600	220	3600	219	3600	205	0	#DIV/0!
98%	3900	230	3900	228	3900	212	0	#DIV/0!
150%	6000	311	6000	309	6000	276	0	#DIV/0!

CDM Smith	CLIENT	City of Georgtown	JOB NO.	2048-272644	DATE 9/28/23
	PROJECT	Cedar Breaks and D B Wood Lift Station	DATE CHECKED	5/23/24	COMPUTED BY MT
	DETAIL	System Data	CHECKED BY	KD	SHEET NO. 4

Scenario Name:	Scenario 3 - 3 Pumps Operation							
System Data - Curve 5F	System Curve ID =		System Curve ID =		System Curve ID =		System Curve ID =	
	System Description:		System Description:		System Description:		System Description:	
	3 pumps pumping from Pump 2 On elevation to gravity discharge location, assuming full pipe capacity		3 pumps pumping from Pump 3 On elevation to gravity discharge location, assuming half full pipe capacity		3 pumps pumping from Pump 4 On elevation to gravity discharge location at pipe invert			
	Model File Name:	Middle Fork Lift Station.fth	Model File Name:	Middle Fork Lift Station.fth	Model File Name:	Middle Fork Lift Station.fth	Model File Name:	
	Model Scenario:	High Head, 3 Pumps	Model Scenario:	Design Head, 3 Pumps	Model Scenario:	LowHead, 3 Pumps	Model Scenario:	
	Suction WSE or HGL (ft) =	737.0	Suction WSE or HGL (ft) =	738.0	Suction WSE or HGL (ft) =	739.0	Suction WSE or HGL (ft) =	
	Discharge WSE or HGL (ft) =	899.0	Discharge WSE or HGL (ft) =	898.5	Discharge WSE or HGL (ft) =	897.5	Discharge WSE or HGL (ft) =	
	Static Head (ft) =	162.0	Static Head (ft) =	160.5	Static Head (ft) =	158.5	Static Head (ft) =	0.0
	Pipe Friction Coefficient =	120	Pipe Friction Coefficient =	120	Pipe Friction Coefficient =	140	Pipe Friction Coefficient =	
	Flow from model (gpm) =	6,000	Flow from model (gpm) =	6,000	Flow from model (gpm) =	6,000	Flow from model (gpm) =	
	TH from Model (ft) =	208.3	TH from Model (ft) =	206.8	TH from Model (ft) =	195.6	TH from Model (ft) =	
	Friction Head (Hf) =	46.3	Friction Head (Hf) =	46.3	Friction Head (Hf) =	37.1	Friction Head (Hf) =	0.0
Percent of Modeled Flow	**Flow (gpm)**	**Head (ft)**	**Flow (gpm)**	**Head (ft)**	**Flow (gpm)**	**Head (ft)**	**Flow (gpm)**	**Head (ft)**
0%	0	162	0	161	0	159	0	#DIV/0!
15%	900	163	900	162	900	160	0	#DIV/0!
30%	1800	167	1800	165	1800	162	0	#DIV/0!
45%	2700	173	2700	171	2700	167	0	#DIV/0!
60%	3600	180	3600	178	3600	173	0	#DIV/0!
75%	4500	189	4500	188	4500	180	0	#DIV/0!
90%	5400	200	5400	199	5400	189	0	#DIV/0!
105%	6300	213	6300	211	6300	199	0	#DIV/0!
120%	7200	227	7200	225	7200	210	0	#DIV/0!
135%	8100	243	8100	241	8100	223	0	#DIV/0!
150%	9000	260	9000	259	9000	237	0	#DIV/0!
165%	9900	279	9900	277	9900	252	0	#DIV/0!
180%	10800	299	10800	298	10800	269	0	#DIV/0!
195%	11700	321	11700	320	11700	286	0	#DIV/0!

D B Wood Lift Station

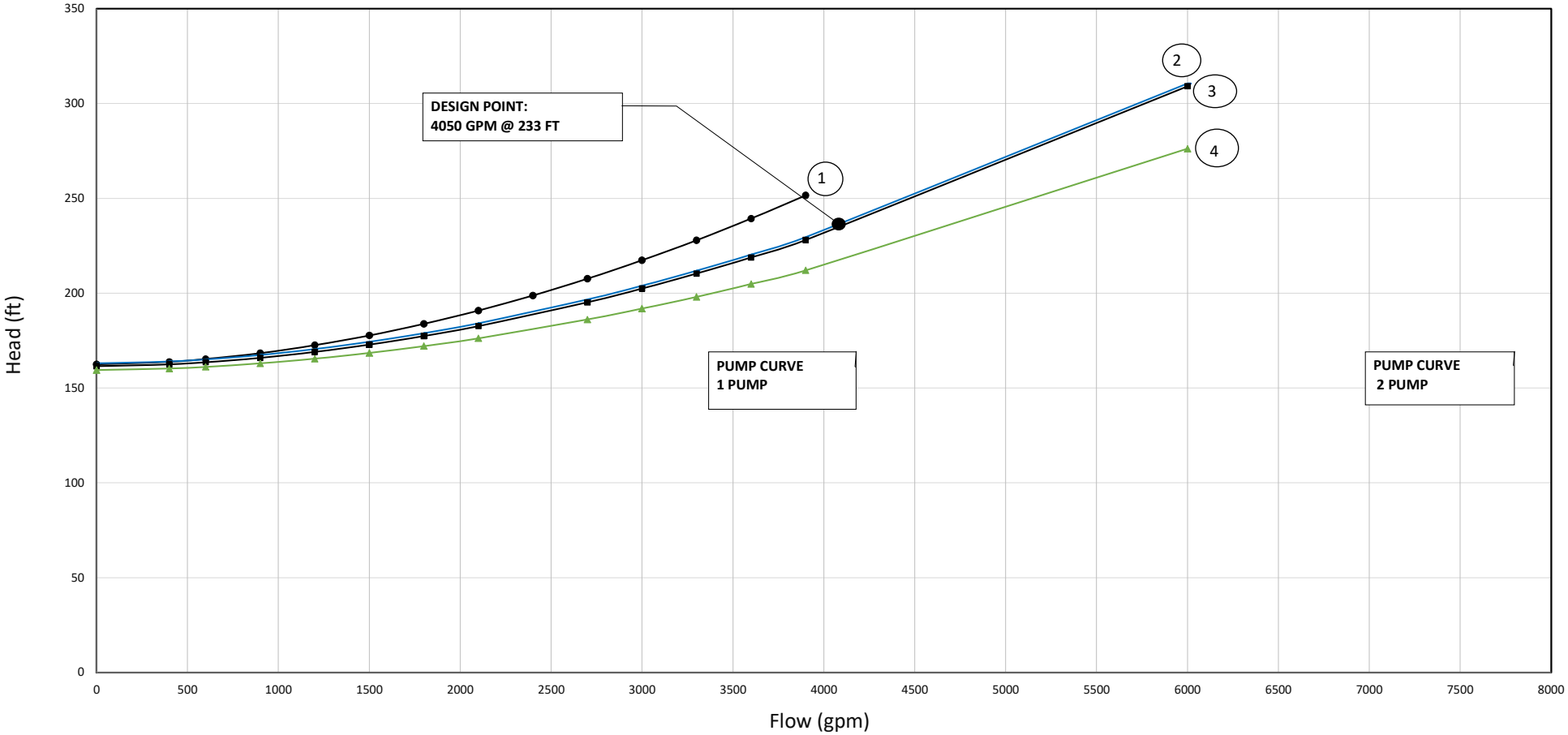

1 One Pump Operating Design Head System Curve C=120

2 Two Pumps Operating High Head System Curve C=120

3 Two Pumps Operating Design Head System Curve C = 120

4 Two Pumps Operating Low Head System Curve C =140

CLIENT	City of Georgetown	JOB NO.	2048-272644	DATE	5/13/23
PROJECT	Cedar Breaks and D B Wood Lift Station	DATE CHECKED	5/23/24	COMPUTED BY	MT
DETAIL	Wetwell Elevation	CHECKED BY	KD		

For Constant Speed Operation

Pump Cycle Volume

Square Wetwell:

Maximum Starts Per Hour	4		
Minimum Cycle Time	15	min	
Pump Station Max Flow at Min Speed	2,000	gpm	2.88 mgd pump
Requried Storage Volume	7,500	gal	
Wetwell Length	19.0	ft	
Wetwell Width	35.0	ft	
Wet Well Area	665	ft^2	
Storage Volume Per Foot	4,974	gal/ft	
Wet Well Stage Need	1.51	ft	

Figure: 30 TAC §217.60(b)(8)

Equation C.4.

$$V = \frac{T \times Q}{4 \times 7.48}$$

Where:

V = Active volume (cubic feet)

Q = Pump capacity (gallons per minute)

T = Cycle time (minutes)

7.48 = Conversion factor (gallons/cubic foot)

	Calculated		Use		
Gravity Influent Invert	742.40	ft			
High Level Alarm	741.00	ft	741.00	ft	
Lag Pump On	740.00	ft	740.00	ft	
Lead Pump On	739.50	ft	738.00	ft	
Lag Pump Off	738.49	ft	737.00	ft	Stagger pump off since constant
Lead Pump Off	737.99	ft	736.00	ft	speed, lead pump will stay on.
Low Level Alarm	737.49	ft	735.00	ft	
Minimum Submergence El	734.58	ft	734.00	ft	
Station Invert	733.49	ft	730.00	ft	
Minimum Submergence	3.42	ft			
Low Level Alarm Above Minimum Submergence El?			YES		

Minimum and Maximum Flow Velocities for Force Main

Pump Station	Nominal Pipe Size (in)	Pipe Inner Diameter	Min Flow Rate (gpm)	Max Flow Rate (gpm)	Min. Velocity (fps)	Max. Velocity (fps)
Cedar Breaks	12	11.294	1,146	2292	3.7	7.3
D B Wood Phase 1	18	16.14	2750	4050	4.3	6.4
D B Wood Future	20	17.814	2750	7100	3.5	9.1

Site Plan

South Lake to South Fork Wastewater Improvements – Gravity and Force Mains
Georgetown, TX

GEORGETOWN
TEXAS
more than welcome

CITY OF GEORGETOWN, TEXAS
SOUTH LAKE TO SOUTH FORK WASTEWATER IMPROVEMENTS
PROJECT NO. PRJ000101

BID NO. 202434 CONTRACT NO. 24-0160-CIP

APRIL 2024

CITY COUNCIL

MAYOR
JOSH SCHROEDER

CITY COUNCIL MEMBERS

AMANDA PARR	DISTRICT 1
SHAWN HOOD	DISTRICT 2
MIKE TRIGGS	DISTRICT 3
RON GARLAND	DISTRICT 4
KEVIN PITTS	MAYOR PRO TEM / DISTRICT 5
JAKE FRENCH	DISTRICT 6
BEN STEWART	DISTRICT 7

CITY MANAGER
DAVID MORGAN

ASSISTANT CITY MANAGER
LAURIE BREWER
WAYNE NERO
NICK WOOLERY

WATER SERVICES UTILITY DIRECTOR
CHELSEA SOLOMON, P.E.

SYSTEMS ENGINEERING DIRECTOR
WESLEY WRIGHT, P.E.

UTILITY ENGINEER
DAVID MUNK, P.E.

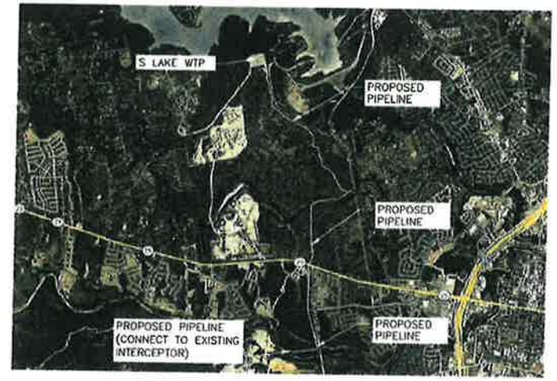

LOCATION PLAN
NTS

CDM Smith
AUSTIN, TEXAS

STATE OF TEXAS
GERALD S. FURRER
129811
LICENSED
PROFESSIONAL ENGINEER
04/30/2024

CITY OF GEORGETOWN, CIP MANAGER — DATE 5-3-24

CITY OF GEORGETOWN, SYSTEM ENGINEERING DIRECTOR — DATE 03MAY2024
Asst. FOR WESLEY WRIGHT

CITY OF GEORGETOWN, WATER SERVICES UTILITY DIRECTOR — DATE 5/6/24

PREPARED BY:
CDM Smith
TEXAS REGISTRATION NUMBER F-3043 — DATE 4/30/2024

Water ***Environment*** ***Transportation*** ***Energy*** ***Facilities***

SHEET INDEX

SL.NO.	SHEET NUMBER	SHEET TITLE
GENERAL		
1	G-0	COVER SHEET
2	G-1	SHEET INDEX
3	G-2	OVERALL ALIGNMENT AND SURVEY CONTROL I
4	G-3	OVERALL ALIGNMENT AND SURVEY CONTROL II
5	G-4	LEGEND AND ABBREVIATIONS
6	G-5	GENERAL NOTES
7	G-6	STANDARD TCEQ GENERAL CONSTRUCTION NOTES I
8	G-7	STANDARD TCEQ GENERAL CONSTRUCTION NOTES II
9	G-8	BURIED PIPING NOTES AND SCHEDULES
10	G-9	TREE LIST
CIVIL		
11	C-1	BASELINE-C PLAN AND PROFILE FROM STA 0+00 TO STA 9+50
12	C-2	BASELINE-C PLAN AND PROFILE FROM STA 9+50 TO STA 17+00
13	C-3	BASELINE-C PLAN AND PROFILE FROM STA 17+00 TO STA 26+50
14	C-4	BASELINE-C PLAN AND PROFILE FROM STA 26+50 TO STA 34+50
15	C-5	BASELINE-C PLAN AND PROFILE FROM STA 34+50 TO STA 42+50
16	C-6	BASELINE-C PLAN AND PROFILE FROM STA 42+50 TO STA 50+00
17	C-7	BASELINE-C PLAN AND PROFILE FROM STA 50+00 TO STA 58+00
18	C-8	BASELINE-C PLAN AND PROFILE FROM STA 58+00 TO STA 66+00
19	C-9	BASELINE-C PLAN AND PROFILE FROM STA 66+00 TO STA 74+00
20	C-10	BASELINE-C PLAN AND PROFILE FROM STA 74+00 TO STA 83+00
21	C-11	BASELINE-C PLAN AND PROFILE FROM STA 83+00 TO STA 91+00
22	C-12	BASELINE-C PLAN AND PROFILE FROM STA 91+00 TO STA 99+00
23	C-13	BASELINE-C PLAN AND PROFILE FROM STA 99+00 TO STA 107+00
24	C-14	BASELINE-C PLAN AND PROFILE FROM STA 107+00 TO STA 115+00
25	C-15	BASELINE-C PLAN AND PROFILE FROM STA 115+00 TO STA 123+00
26	C-16	BASELINE-C PLAN AND PROFILE FROM STA 123+00 TO STA 131+00
27	C-17	BASELINE-C PLAN AND PROFILE FROM STA 131+00 TO STA 139+00
28	C-18	BASELINE-C PLAN AND PROFILE FROM STA 139+00 TO STA 146+00
29	C-19	BASELINE-C PLAN AND PROFILE FROM STA 146+00 TO STA 149+35
30	C-20	BASELINE-B PLAN AND PROFILE FROM STA 130+00 TO STA 138+00
31	C-21	BASELINE-B PLAN AND PROFILE FROM STA 138+00 TO STA 146+00
32	C-22	BASELINE-B PLAN AND PROFILE FROM STA 146+00 TO STA 154+00
33	C-23	BASELINE-B PLAN AND PROFILE FROM STA 154+00 TO STA 162+00
34	C-24	BASELINE-B PLAN AND PROFILE FROM STA 162+00 TO STA 170+00
35	C-25	BASELINE-B PLAN AND PROFILE FROM STA 170+00 TO STA 178+00
36	C-26	BASELINE-B PLAN AND PROFILE FROM STA 178+00 TO STA 186+00
37	C-27	BASELINE-B PLAN AND PROFILE FROM STA 186+00 TO STA 192+63
38	C-28	BASELINE-A PLAN AND PROFILE FROM STA 196+00 TO STA 205+00
39	C-29	BASELINE-A PLAN AND PROFILE FROM STA 205+00 TO STA 213+00
40	C-30	BASELINE-A PLAN AND PROFILE FROM STA 213+00 TO STA 221+00
41	C-31	BASELINE-A PLAN AND PROFILE FROM STA 221+00 TO STA 229+00
42	C-32	BASELINE-A PLAN AND PROFILE FROM STA 229+00 TO STA 237+00
43	C-33	BASELINE-A PLAN AND PROFILE FROM STA 237+00 TO STA 247+23
44	CD-1	CIVIL STANDARD DETAILS I
45	CD-2	CIVIL STANDARD DETAILS II
46	CD-3	CIVIL STANDARD DETAILS III
47	CD-4	CIVIL STANDARD DETAILS IV
48	CD-5	CIVIL STANDARD DETAILS V
49	CD-6	CIVIL STANDARD DETAILS VI
50	CD-7	CIVIL STANDARD DETAILS VII
51	CD-8	VOID MITIGATION DETAILS

STATE OF TEXAS
GERALD S. FURRIER
129811
LICENSED
PROFESSIONAL ENGINEER
04/30/2024

REV. NO.	DATE	DRWN	CHKD	REMARKS

DESIGNED BY: A. KAJALE
DRAWN BY: S MANISANKAR
SHEET CHK'D BY: ASHWIN G
CROSS CHK'D BY: A. RHAMES
APPROVED BY: G. FURRIER
DATE: APRIL 2024

CDM Smith
8310-1 N Capital of Texas Hwy, Suite 250
Austin, TX 78731
Tel: (512) 346-1100
TBPELS Firm Registration No. F-3043

CITY OF GEORGETOWN, TEXAS

SOUTH LAKE TO SOUTH FORK
WASTEWATER IMPROVEMENTS

SHEET INDEX

PROJECT NO. 2048-272644
FILE NAME: G001INDX.dwg

SHEET NO.
G-1

XREFs: [CDMS_2234_South lake to South fork_Border] Images: []
Last saved by: SAMIDURAM Time: 03-05-2024 11:43:45
pw:\\cdmsmith-az02-pw.bentley.com:pw_pi1\2048\272644\04 Design Services NM_50%\01 General\10 BIM_CADD\G001INDX.dwg
©2022 CDM SMITH ALL RIGHTS RESERVED.
REUSE OF DOCUMENTS: THESE DOCUMENTS AND DESIGNS PROVIDED BY PROFESSIONAL SERVICE, INCORPORATED HEREIN, ARE THE PROPERTY OF CDM SMITH AND ARE NOT TO BE USED, IN WHOLE OR PART, FOR ANY OTHER PROJECT WITHOUT THE WRITTEN AUTHORIZATION OF CDM SMITH.

Plotted: 5/3/2024 12:26:57 PM

PLAN (BASELINE C)

1" = 400'

200 0 400

N

HORIZONRTAL CONTROL POINTS					
SL.NO.	POINT NO.	ELEVATION	NORTHING	EASTING	DESCRIPTION
1	401	742.12	10200205.186	3119166.859	80D/W
2	402	743.44	10200208.467	3118831.707	80D/W
3	602	852.36	10201604.998	3118960.899	MAG/W
4	651	905.04	10205885.532	3117571.138	CGS/W
5	652	890.07	10207335.724	3117462.343	IRSC-IC-5/8
6	653	841.02	10208308.545	3117473.479	IRSC-IC-5/8
7	654	772.39	10209431.962	3118426.377	IRSC-IC-5/8
8	655	794.67	10209890.370	3118498.377	IRSC-IC-5/8
9	656	812.98	10211014.292	3117830.920	IRSC-IC-5/8
10	761	811.16	10200133.744	3119566.708	X CUT-LVL
11	762	806.60	10199935.577	3119648.665	X CUT-LVL
12	763	763.34	10200446.247	3119311.270	CGS
13	764	727.32	10199798.980	3119615.115	CGS
14	2552	845.03	10202372.786	3118679.452	CGS

SURVEY CONTROL NOTE:

SURVEY CONTROL NOTES:
COORDINATES ARE SURFACE VALUES BASED ON THE TEXAS STATE PLANE COORDINATE SYSTEM, NAD 83, CENTRAL ZONE 4203. TO CONVERT COORDINATES AND DISTANCES TO GRID VALUES DIVIDE BY A COMBINED SURFACE ADJUSTMENT FACTOR OF 0.9998673234. ELEVATIONS REPORTED ARE ORTHOMETRIC HEIGHTS BASED ON NAVD 88.

STATE OF TEXAS
GERALD S. FURRIER
129811
LICENSED
PROFESSIONAL ENGINEER
04/30/2024

REV. NO.	DATE	DRWN	CHKD	REMARKS

DESIGNED BY: A. KAJALE
DRAWN BY: S MANISANKAR
SHEET CHK'D BY: ASHWIN G
CROSS CHK'D BY: A. RHAMES
APPROVED BY: G. FURRIER
DATE: APRIL 2024

CDM Smith
8310-1 N Capital of Texas Hwy, Suite 250
Austin, TX 78731
Tel: (512) 346-1100
TBPELS Firm Registration No. F-3043

CITY OF GEORGETOWN, TEXAS

SOUTH LAKE TO SOUTH FORK WASTEWATER IMPROVEMENTS

OVERALL ALIGNMENT AND SURVEY CONTROL I

PROJECT NO. 2048-272644
FILE NAME: G002KYPL.dwg
SHEET NO.
G-2

Plotted: 5/3/2024 2:14:20 PM

XREFs: [CWZ000WL_CDMS_2234_South lake to South fork_Border] Images: []
Last saved by: KAJALEAN Time: 5/3/2024 1:26:56 AM
C:\pw_pt\Kajalean\d3151940\G002KYPL.dwg
© 2023 CDM SMITH ALL RIGHTS RESERVED.
REUSE OF DOCUMENTS: THESE DOCUMENTS AND DESIGNS PROVIDED BY PROFESSIONAL SERVICE, INCORPORATED HEREIN, ARE THE PROPERTY OF CDM SMITH AND ARE NOT TO BE USED, IN WHOLE OR PART, FOR ANY OTHER PROJECT WITHOUT THE WRITTEN AUTHORIZATION OF CDM SMITH.

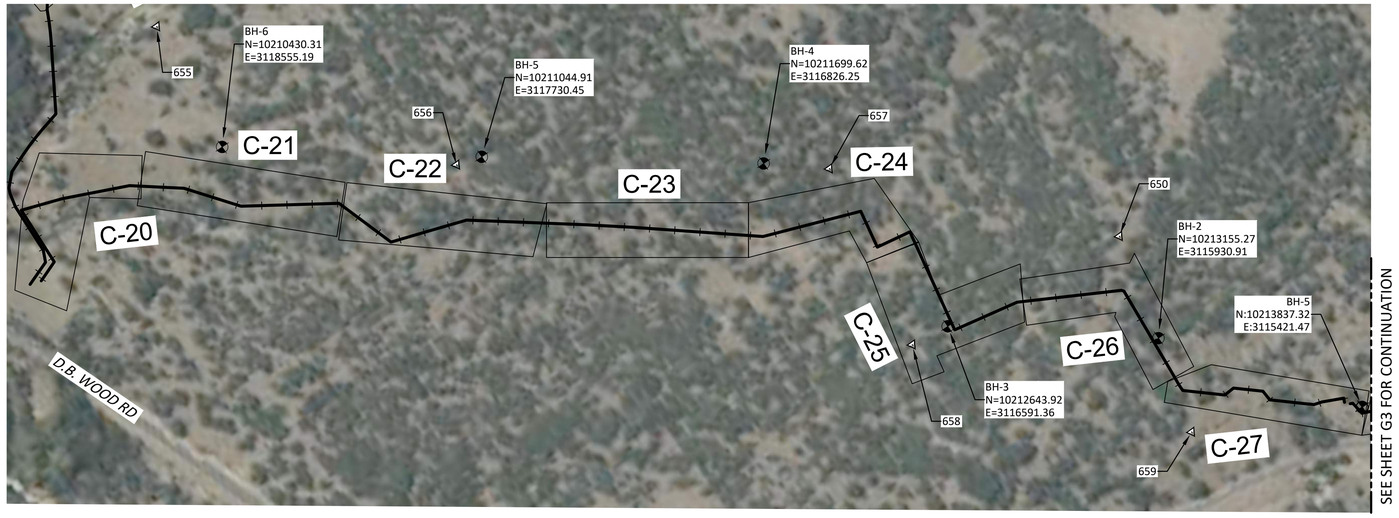

PLAN (BASELINE B)

1" = 400'

200 0 400

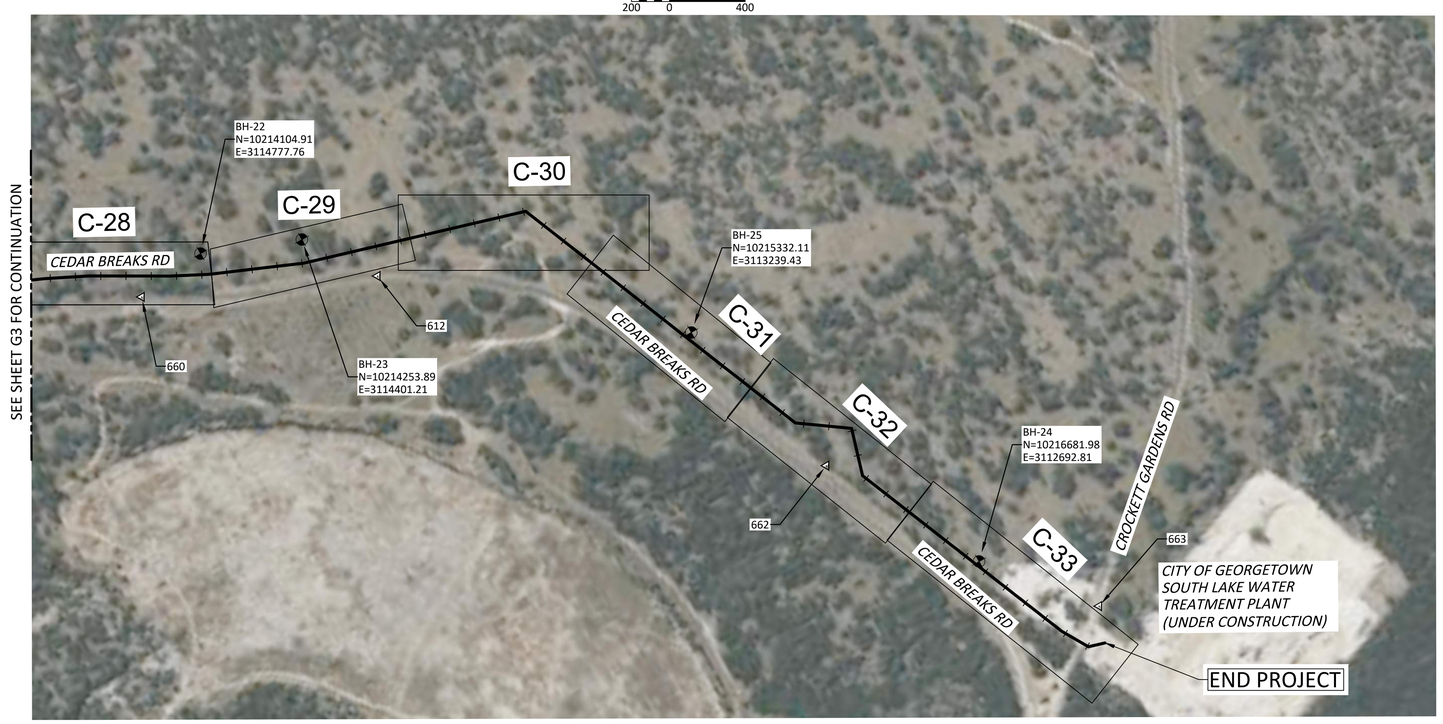

PLAN (BASELINE A)

1" = 400'

200 0 400

HORIZONRTAL CONTROL POINTS					
SL.NO.	POINT NO.	ELEVATION	NORTHING	EASTING	DESCRIPTION
1	650	842.27	10212735.35100	3115829.87270	80D/W
2	655	794.67	10209890.37000	3118498.37730	IRSC-IC-5/8
3	656	812.98	10211014.29180	3117830.92030	IRSC-IC-5/8
4	657	829.22	10211864.06310	3116623.76670	IRSC-IC-5/8
5	658	839.19	10212623.96540	3116748.47210	IRSC-IC-5/8
6	659	835.59	10213535.88430	3116033.30630	IRSC-IC-5/8
7	660	831.35	10214139.80600	3115065.45740	IRSC-IC-5/8
8	612	885.87	10214526.55070	3114211.66800	80D/W
9	662	901.17	10216053.83020	3113033.38510	IRSC-IC-5/8
10	663	915.12	10217069.10220	3112366.09220	IRSC-IC-5/8

SURVEY CONTROL NOTE:

SURVEY CONTROL NOTES:
COORDINATES ARE SURFACE VALUES BASED ON THE TEXAS STATE PLANE COORDINATE SYSTEM, NAD 83, CENTRAL ZONE 4203. TO CONVERT COORDINATES AND DISTANCES TO GRID VALUES DIVIDE BY A COMBINED SURFACE ADJUSTMENT FACTOR OF 0.9998673234. ELEVATIONS REPORTED ARE ORTHOMETRIC HEIGHTS BASED ON NAVD 88.

STATE OF TEXAS
GERALD S. FURRIER
129811
LICENSED
PROFESSIONAL ENGINEER
04/30/2024

REV. NO.	DATE	DRWN	CHKD	REMARKS

DESIGNED BY: A. KAJALE
DRAWN BY: S MANISANKAR
SHEET CHK'D BY: ASHWIN G
CROSS CHK'D BY: A. RHAMES
APPROVED BY: G. FURRIER
DATE: APRIL 2024

CDM Smith
8310-1 N Capital of Texas Hwy, Suite 250
Austin, TX 78731
Tel: (512) 346-1100
TBPELS Firm Registration No. F-3043

CITY OF GEORGETOWN, TEXAS

SOUTH LAKE TO SOUTH FORK WASTEWATER IMPROVEMENTS

OVERALL ALIGNMENT AND SURVEY CONTROL II

PROJECT NO. 2048-272644
FILE NAME: G003KYPL.dwg
SHEET NO.
G-3

Plotted: 5/3/2024 2:11:39 PM

XREFs: [CWZ000WL, CDMS_2234_South lake to South fork_Border] Images: []
Last saved by KAJALEAN Time: 5/2/2024 5:17:38 PM
C:\pw_pw1\kajalean\d3151940\G003KYPL.dwg
© 2023 CDM SMITH ALL RIGHTS RESERVED.
REUSE OF DOCUMENTS: THESE DOCUMENTS AND DESIGNS PROVIDED BY PROFESSIONAL SERVICE, INCORPORATED HEREIN, ARE THE PROPERTY OF CDM SMITH AND ARE NOT TO BE USED, IN WHOLE OR PART, FOR ANY OTHER PROJECT WITHOUT THE WRITTEN AUTHORIZATION OF CDM SMITH.

LANDSCAPE & DRAINAGE SYMBOLS

SYMBOL	FEATURE
	BUILDING OR STRUCTURE FOOTPRINT
4" OAK	TREE, SIZE & TYPE
	TREE PROTECTION
	TREE TO BE REMOVED
	EDGE OF WOODS OR BRUSH
	DIRECTION OF FLOW FOR STORMWATER
TCE TCE TCE	TEMPORARY CONSTRUCTION EASEMENT
SF SF	SILT FENCE
MS MS	MULCH SOCK
LOD LOD LOD	LIMITS OF DISTURBANCE
PEL PEL PEL	PERMANENT EASEMENT LINE
SCE	STABILIZED CONSTRUCTION ENTRANCE

SURFACE ELEVATION SYMBOLS

SYMBOL	FEATURE
84	DEPRESSION CONTOUR
84	EXISTING INTERMEDIATE CONTOUR LINE & ELEVATION DESIGNATION
85	EXISTING INDEX CONTOUR LINE & ELEVATION DESIGNATION
84	PROPOSED INTERMEDIATE CONTOUR LINE & ELEVATION DESIGNATION
85	PROPOSED INDEX CONTOUR LINE & ELEVATION DESIGNATION
×365.7	SPOT ELEVATION
	EXISTING EMBANKMENT (REVERSE SYMBOLS FOR CHANNEL)
	PROPOSED EMBANKMENT (REVERSE SYMBOLS FOR CHANNEL)

UNDERGROUND/OVERHEAD UTILITY SYMBOLS

SYMBOL	FEATURE
MH-14 WEST IE 27.35 EAST IE 32.50 — 8" WW	WASTEWATER PIPE & MANHOLE
MH-22 EAST IE 32.75 WEST IE 32.50 — 8" SD	STORM DRAIN & MANHOLE
W — FH	WATER LINE W/FIRE HYDRANT ASSEMBLY (INCLUDES VALVE)
ELEC	ELECTRICAL CABLE/DUCT
OE	OVERHEAD ELECTRIC
TEL	TELEPHONE
OT	OVERHEAD TELEPHONE
G	GAS LINE
LP	LIGHT POLE
PP — GW	POWER POLE W/GUY WIRE

ITEMS TO BE REMOVED / ITEMS TO BE DEMOLISHED

	ROCK BERM
	EROSION CONTROL BLANKET
	100 YEARS FLOOD PLAIN
	500 YEARS FLOOD PLAIN

EXISTING OR FUTURE CONDITION DESIGNATION

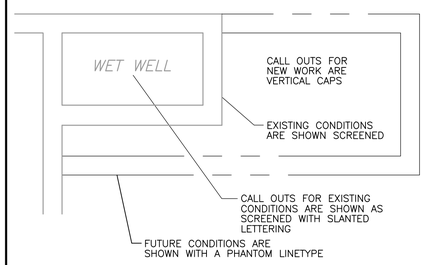

SECTION CUT SYMBOLS

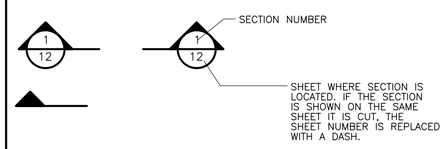

DETAIL CALL OUT SYMBOLS

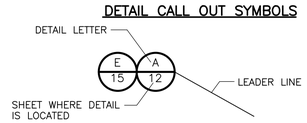

IF MULTIPLE DETAILS REFER TO THE SAME AREA OF THE DRAWING, THE BUBBLES ARE STACKED SIDE BY SIDE.

DRAWING, SECTION & DETAIL TITLES

SUBTITLE OR DESCRIPTION (AS REQ'D)

PLAN
1/4" = 1'-0"

SUBTITLE OR DESCRIPTION (AS REQ'D)

ELEVATION
1/4" = 1'-0"

SECTION 1 / 6 — 3/4" = 1'-0"
- 1: SECTION NUMBER
- 6: SHEET WHERE SECTION CUT IS TAKEN *

DETAIL A / 3 — 3/4" = 1'-0"
- A: DETAIL LETTER
- 3: SHEET WHERE DETAIL IS TAKEN *

* IF SECTION, DETAIL, SCHEMATIC OR DIAGRAM IS DRAWN ON THE SAME SHEET THAT IT IS TAKEN FROM, THE SHEET NUMBER IS REPLACED WITH A HYPHEN. IF THE SECTION IS REFERENCED ON MULTIPLE SHEETS, THE SHEET NUMBER SHOWN INDICATES THE FIRST SHEET THE SECTION IS TAKEN FROM.

BOUNDARY & MARKER SYMBOLS

SYMBOL	FEATURE
X X X	CHAIN LINK FENCE
B-7	BORING
BM 8	BENCHMARK
	TREE PROTECTION FENCING

MB-2
- DISCIPLINE
- AREA CODE
- SEQUENTIAL SHEET NUMBER

G	GENERAL	A	CHURCH ROAD LIFT STATION
C	CIVIL	B	CLOICE CREEK LIFT STATION
E	ELECTRICAL	P	PIPELINE IMPROVEMENTS
M	PROCESS MECHANICAL	Z	STANDARD DETAILS
S	STRUCTURAL		
H	HVAC		
A	ARCHITECTURAL		

TRAVELED WAY SYMBOLS

SYMBOL	FEATURE
	UNIMPROVED DIRT ROAD OR GRAVELED ROAD
	PAVED ROAD

ABBREVIATIONS

ASTM	AMERICAN SOCIETY OF TESTING AND MATERIALS
ABAN	ABANDONED
AC	ASPHALTIC CONCRETE OR ASPHALT
AFG	ABOVE FINISHED GRADE
AHD	AHEAD
APPROX	APPROXIMATE
ARV	AIR RELEASE VALVE
ASPH	ASPHALT
AVAR, AV/AR	AIR VACUUM RELIEF/AIR RELEASE VALVE
BF	BLIND FLANGE
BFV	BUTTERFLY VALVE
BG	BELOW GRADE
BK	BACK
BLVD	BOULEVARD
BM	BENCHMARK
BO	BLOW OFF
C	CIVIL
CAV	AIR VACUUM RELIEF/AIR RELEASE VALVE
CL	CLASS, CENTERLINE
CLR	CLEARANCE
COMB	COMBINATION
CONST	CONSTRUCTION
CONT	CONTINUOUS, CONTINUATION
COORD	COORDINATE
CP	CONTROL POINT
DEF	DEFLECTION
DEMO	DEMOLISH/DEMOLITION
DEPT	DEPARTMENT
DET	DETAIL
DIA	DIAMETER
DI	DUCTILE IRON PIPE
DWG	DRAWING
E	EAST, EASTERLY, EASTING
EG	EXIST GRADE

ABBREVIATIONS

ELEC	ELECTRIC, ELECTRICAL
ELEV	ELEVATION, ELEVATED
ENGR	ENGINEER
ESMT	EASEMENT
EXIST, EX	EXISTING
FG	FINISHED GRADE
FLEX	FLEXIBLE
FPVC	FUSIBLE POLYVINYL CHLORIDE
FT	FEET
FV	FIELD VERIFY
G	GAS
GV	GATE VALVE
GV&B	GATE VALVE AND BOX
HGL	HYDRAULIC GRADE LINE
HORIZ	HORIZONTAL
HWY	HIGHWAY
IBC	INTERNATIONAL BUILDING CODE
ID	INSIDE DIAMETER
IE	INVERT ELEVATION
IN	INCHES
INT	INTERSECTION
INV	INVERT
L	LENGTH/LEFT
LF	LINEAR FEET
LOD	LIMITS OF DISTURBANCE
LT	LEFT
MAX	MAXIMUM
MH	MANHOLE
MIN	MINIMUM
MJ	MECHANICAL JOINT
MS	MULCH SOCK
MSL	MEAN SEA LEVEL
N	NORTH, NORTHERLY, NORTHING
NAD83	NORTH AMERICAN DATUM 1983
NIC	NOT IN CONTRACT
NTS	NOT TO SCALE
OD	OUTSIDE DIAMETER
O/C	ON CENTER
OFF	OFFSET
OH	OVERHEAD
OHE	OVERHEAD ELECTRIC
OT	OVERHEAD TELEPHONE
PC	POINT OF CURVATURE
PEL	PERMANENT EASEMENT LINE
PI	POINT OF INTERSECTION
PL	PROPERTY LINE
PP	POWER POLE
PT	POINT OF TANGENCY
PVC	POLYVINYL CHLORIDE
R	RADIUS
RD	ROAD
R/RT	RIGHT
R/W	RIGHT OF WAY
R&R	REMOVE AND RECONSTRUCT
REF	REFERENCE
REQ'D	REQUIRED
REST'D	RESTRAINED
RT	RIGHT
S	SLOPE OR SOUTH
SCP	SURVEY CONTROL POINT
SCH	SCHEDULE
SF	SILT FENCE

ABBREVIATIONS

SHT	SHEET
SIM	SIMILAR
SPECS	SPECIFICATIONS
SQ	SQUARE
SS	STAINLESS STEEL, SANITARY SEWER
SSPWC	STANDARD SPECIFICATIONS FOR PUBLIC WORKS CONSTRUCTION
ST	STREET
STD	STANDARD
STA	STATION
STL	STEEL
T&B	TOP AND BOTTOM
TCE	TEMPORARY CONSTRUCTION EASEMENT
TEL	TELEPHONE
TEMP	TEMPORARY
TOB	TOP OF BERM/BANK
TOC	TOP OF CONCRETE
TOW	TOP OF WALL
TXDOT	TEXAS DEPARTMENT OF TRANSPORTATION
TYP	TYPICAL
UGND	UNDERGROUND
UNK	UNKNOWN
UNO	UNLESS NOTED OTHERWISE
US/USA	UNITED STATES/ UNITED STATES OF AMERICA, UNDERGROUND SERVICES ALERT
USC&GS	UNITED STATES COAST AND GEODETIC SURVEY
UTIL	UTILITY
VERT	VERTICAL
W	WATER/WEST/WIDE
W/	WITH
WM	WATER MAIN
WS	WELDED STEEL
WT	WEIGHT
WTR	WATER
WV	WATER VALVE
ø	DIAMETER
@	AT
LOD	LIMITS OF DISTURBANCE

STATE OF TEXAS — GERALD S. FURRIER — 129811 — LICENSED PROFESSIONAL ENGINEER
04/30/2024

REV. NO.	DATE	DRWN	CHKD	REMARKS

DESIGNED BY: A. KAJALE
DRAWN BY: S MANISANKAR
SHEET CHK'D BY: ASHWIN G
CROSS CHK'D BY: A.RHAMES
APPROVED BY: G.FURRIER
DATE: APRIL 2024

CDM Smith
8310-1 N Capital of Texas Hwy, Suite 250
Austin, TX 78731
Tel: (512) 346-1100
TBPELS Firm Registration No. F-3043

CITY OF GEORGETOWN, TEXAS

SOUTH LAKE TO SOUTH FORK WASTEWATER IMPROVEMENTS

LEGENDS AND ABBREVIATIONS

PROJECT NO. 2048-272644
FILE NAME: G004NFLG.dwg
SHEET NO. G-4

XREFs: [CDMS_2234_South_lake_to_South_fork_Border_PP] Images: []
Last saved by: KAALEAN Time: 5/3/2024 1:27:00 AM
C:\pw_pr1\kaalean\33151940\G004NFLG.dwg
©2022 CDM SMITH ALL RIGHTS RESERVED.
REUSE OF DOCUMENTS: THESE DOCUMENTS AND DESIGNS PROVIDED BY PROFESSIONAL SERVICE, INCORPORATED HEREIN, ARE THE PROPERTY OF CDM SMITH AND ARE NOT TO BE USED, IN WHOLE OR PART, FOR ANY OTHER PROJECT WITHOUT THE WRITTEN AUTHORIZATION OF CDM SMITH.
Plotted: 5/3/2024 2:12:30 PM

GENERAL NOTES

1. ALL MANHOLES SHALL BE CONSTRUCTED WITH ECCENTRIC CONES. ALL MANHOLE LIDS SHALL BE STANDARD CITY OF GEORGETOWN MANHOLE LIDS AS SPECIFIED IN DRAWINGS & SECTION 02605 IN SPECIFICATIONS.
2. ANY EXISTING PAVEMENT (INCLUDING DRIVEWAY APPROACHES & PARKING LOTS) DAMAGED OR REMOVED DURING CONSTRUCTION SHALL BE REPLACED OR REPAIRED AT THE CONTRACTOR'S EXPENSE.
3. WHEN WORKING IN PUBLIC RIGHT-OF-WAY, CONTRACTOR WILL BE RESPONSIBLE FOR ERECTING AND MAINTAINING BARRICADES, FLAGGERS, SIGNS & OTHER DEVICES NECESSARY TO PROTECT THE PUBLIC & MAINTAIN TRAFFIC FLOW.
4. NO BLASTING WILL BE ALLOWED.
5. ANY EXISTING FENCES OR WALLS DAMAGED OR REMOVED DURING CONSTRUCTION SHALL BE REPLACED OR REPAIRED AT THE CONTRACTOR'S EXPENSE.
6. MANHOLE COVERS SHALL BE BOLTED & GASKETED ONLY WHERE INDICATED IN DRAWINGS.
7. THE CONTRACTOR SHALL GIVE THE CITY A MINIMUM OF 72 HOURS NOTICE BEFORE BEGINNING CONSTRUCTION.
8. THE LOCATION OF ANY UTILITY LINES SHOWN ON THE PLANS MUST BE FIELD VERIFIED BY THE CONTRACTOR. IT SHALL BE THE CONTRACTOR'S RESPONSIBILITY TO ENSURE THAT NO CONFLICTS EXIST, AND THAT ANY DAMAGE TO SAID LINES WILL BE REPAIRED AS NECESSARY BY THE CONTRACTOR, AT THE CONTRACTOR'S EXPENSE. THE LOCATIONS OF EXIST UTILITIES SHOWN ON THESE PLANS ARE APPROXIMATE. AT LEAST 48 HOURS PRIOR TO BEGINNING CONSTRUCTION IN THE VICINITY OF UNDERGROUND UTILITIES, NOTIFY THE FOLLOWING AS APPLICABLE.

CITY OF GEORGETOWN	(512) 930-3555
GENERAL TELEPHONE CO	(512) 869-2237 (RON McCORMICK AT GEORGETOWN)
GEORGETOWN ELECTRIC CO	(512) 930-3555 (GARY WARNOCK)
LONE STAR GAS CO	(512) 244-0521 (TRANSMISSION LINES)
	(512) 244-1217 (DISTRIBUTION LINES)
TUELECTRIC	1-800-242-9113

9. NO BURNING OF TREES, BRUSH, RUBBISH, VEGETATION, OR OTHER OBJECTIONABLE MATTER WILL BE ALLOWED ON THE PROJECT SITE. ALL CLEARED & GRUBBED MATERIAL SHALL BE DISPOSED OF IN A MANNER ACCEPTABLE TO THE CITY OF GEORGETOWN.
10. PRIOR TO BEGINNING ANY CONSTRUCTION, THE CONTRACTOR SHALL VERIFY HORIZONTAL & VERTICAL LOCATIONS OF ALL KNOWN EXISTING UTILITIES WHICH WILL EITHER BE CONNECTED TO OR CROSSED. IF THERE ARE ANY CONFLICTS BETWEEN PROPOSED & EXISTING UTILITIES, OR IF THE EXISTING UTILITIES ARE IN ANY WAY DIFFERENT FROM WHAT IS SHOWN ON THE DRAWINGS, IT SHALL BE THE CONTRACTOR'S RESPONSIBILITY TO NOTIFY THE CITY BEFORE PROCEEDING WITH ANY CONSTRUCTION. THE CONTRACTOR SHALL PROVIDE TO THE CITY, FOR THE CITY'S APPROVAL, A SOLUTION FOR RESOLVING SUCH CONFLICTS. THE CONTRACTOR SHALL BE RESPONSIBLE FOR RESOLVING ALL CONFLICTS AT HIS EXPENSE.
11. ELECTRICAL LINES ARE LOCATED CLOSE TO THE PROJECT. THE ATTENTION OF THE CONTRACTOR IS DIRECTED TO THE STATE LAW (VERNON'S ANNOTATED TEXAS STATUTES, ARTICLE 1436(c)) CONCERNING OPERATIONS IN THE VICINITY OF ELECTRICAL LINES & THE NEED FOR EFFECTIVE PRECAUTIONARY MEASURES.
12. ALL DISTURBED AREAS SHALL BE RESTORED & HYDROMULCHED. THE SEEDING SHALL BE APPLIED AT THE SPECIFIED RATE OVER ALL AREAS DISTURBED BY THE CONTRACTOR.
13. SURVEYING WAS PERFORMED BY INLAND GEODETICS, 1504 CHISHOLM TRAIL, SUITE 101, ROUND ROCK, TEXAS 78681, (512) 238-1200.
14. UPON COMPLETION OF CONSTRUCTION, CONTRACTOR SHALL GRADE ROW TO EXISTING CONDITIONS. CONTRACTOR SHALL INSTALL TOPSOIL, EROSION CONTROL BLANKETS, FERTILIZER, SEED, & FIBER MULCH IN ACCORDANCE WITH SECTION 02490. MISCELLANEOUS SITE CLEANUP SHALL BE IN ACCORDANCE WITH SECTION 02901.
15. ANY DAMAGE TO EXISTING STRUCTURES (IE, FENCES, MAILBOXES, ROW MONUMENTS, SIGNS, CULVERTS, & CONCRETE APRONS, ETC.) DURING CONSTRUCTION SHALL BE REPAIRED AT CONTRACTOR'S EXPENSE. REPLACEMENT MATERIALS SHALL MATCH EXISTING. ALL REPAIR WORK MUST BE APPROVED BY OWNER OR OWNER REPRESENTATIVE.
16. CONTRACTOR SHALL CONTACT GARY WARNOCK, ELECTRICAL SYSTEMS PLANNER AT CITY OF GEORGETOWN COMMUNITY OWNED UTILITIES, 48 HOURS PRIOR TO CONSTRUCTION NEAR EXISTING AERIAL POWER UTILITIES.
17. NO WORK SHALL BE PERFORMED ON SATURDAYS, SUNDAYS, OR CITY HOLIDAYS WITHOUT WRITTEN PERMISSION BY OWNER. THE SPECIFIED CONTRACT TIMES WERE ESTABLISHED ASSUMING NO WEEKEND OR HOLIDAY WORK. SATURDAYS, SUNDAYS & HOLIDAYS WERE COUNTED IN DETERMINING THE NUMBER OF CONSECUTIVE CALENDAR DAYS USED TO COMPLETE PROJECT. WORKING HOURS ARE LIMITED TO 7:00 AM TO 6:00 PM MONDAY THROUGH FRIDAY.
18. ALL MANHOLE FRAMES & COVERS SHALL BE DESIGNED FOR HS-20 LOADING.
19. CONTRACTOR SHALL PROVIDE "AS-BUILT" PLANS TO THE ENGINEER SO THAT THE REPRODUCIBLE OF THE ENGINEERING PLANS MAY BE CORRECTED TO REFLECT "RECORD DRAWINGS" CONDITIONS.
20. ALL ASPHALT & CONCRETE PAVEMENT TO BE REMOVED SHALL BE SAW CUT TO FULL DEPTH OF THE ASPHALT OR CONCRETE LAYER.
21. NO TREES SHALL BE REMOVED WITHOUT ENGINEER'S APPROVAL. THE ENGINEER MAY ELECT TO ALTER PIPE LINE ROUTES SLIGHTLY TO AVOID DAMAGING EXISTING TREES.
22. BID FORM QUANTITIES ARE NOT NECESSARILY ACTUAL QUANTITIES. CONTRACTOR WILL BE PAID FOR MEASURED QUANTITIES ACTUALLY INSTALLED & APPROVED.
23. MAILBOXES, STREET SIGNS & TRAFFIC CONTROL SIGNS IN CONFLICT WITH THE CONSTRUCTION SHALL BE REMOVED & REPLACED. DURING CONSTRUCTION, CONTRACTOR SHALL PROVIDE TEMPORARY SUPPORT SO THAT USE OF THE MAILBOX OR VISIBILITY OF THE TRAFFIC CONTROL SIGN IS NOT IMPAIRED. PAYMENT FOR REMOVING, REPLACING & PROVIDING TEMPORARY SUPPORT FOR MAILBOXES & SIGNS SHALL BE INCLUDED AS PART OF SITE CLEARING IN THE BID FORM.
24. IN CASE OF CONFLICT BETWEEN PLANS AND/OR SPECIFICATIONS AND THE TCEQ REGULATIONS, THE TCEQ REGULATIONS SHALL PREVAIL.

GENERAL CIVIL/SITE NOTES

1. ALL MATERIALS & CONSTRUCTION SHALL BE IN ACCORDANCE WITH THE PROJECT SPECIFICATIONS.
2. CONTRACTOR SHALL BE RESPONSIBLE FOR MAINTENANCE OF EACH SEDIMENTATION/EROSION CONTROL MEASURE ON THIS PROJECT.
3. UNSUITABLE EXCAVATED MATERIALS SHALL BE KNOWN AS "WASTE" & SHALL BECOME THE PROPERTY OF THE CONTRACTOR & IT SHALL BECOME THE CONTRACTORS SOLE RESPONSIBILITY TO DISPOSE OF THIS MATERIAL OFF THE LIMITS OF THE PROJECT IN AN ENVIRONMENTALLY SOUND MANNER. THE CONTRACTOR SHALL NOTIFY THE CITY OF GEORGETOWN PRIOR TO OFFSITE DISPOSAL. THIS NOTIFICATION SHALL INCLUDE THE DISPOSAL LOCATION & COPY OF THE PERMIT ISSUED TO RECEIVE THE MATERIAL.
4. EROSION CONTROL CONSTRUCTION SEQUENCE:
   1. INSTALL EROSION CONTROL MEASURES AS INDICATED ON PLAN & PROFILE SHEETS.
   2. SITE VISIT BY CITY OF GEORGETOWN INSPECTOR.
   3. AFTER INSPECTOR APPROVAL, BEGIN CONSTRUCTION.
   4. UPON CONSTRUCTION COMPLETION, RESTORE ALL DISTURBED AREAS.
   5. ARRANGE FOR FINAL INSPECTION.
   6. REMOVE TEMPORARY EROSION CONTROL MEASURES.
5. UTILITIES & PIPES TO BE DISTURBED BY NEW WORK SHALL BE PROTECTED AS NOTED. CARE SHALL BE TAKEN TO PROTECT EXISTING FACILITIES.
6. CONTRACTOR SHALL REPAIR ALL PAVEMENT DAMAGED DURING CONSTRUCTION. DAMAGED PAVEMENT SHALL BE SAW CUT & PATCHED IN A RECTANGULAR SHAPE PERPENDICULAR TO CURBS & STRUCTURES TO MATCH EXISTING CONDITIONS PRIOR TO CONSTRUCTION.
7. FINISH GRADES SHALL SLOPE UNIFORMLY.
8. CONTRACTOR SHALL FIELD VERIFY ALL EXISTING FACILITIES (SIGNS, UTILITIES, STRUCTURES, ETC).
9. TRACK EQUIPMENT WILL NOT BE ALLOWED ON PAVED ROADWAYS WITHOUT SUITABLE PLYWOOD MATS OR OTHER APPROVED PROTECTION UNDER ALL TRACKS.
10. SEWER PIPE WITHIN 9 FEET OF A WATER LINE CROSSING AS INDICATED ON DRAWINGS SHALL BE AWWA C900 DR 18 PVC PIPE & INSTALLED PER THE DETAILS.
11. DUE TO RESTRICTED WORKING AREAS AND THE CLOSE PROXIMITY OF EXISTING FACILITIES, THE CONTRACTOR WILL NOT BE ALLOWED TO USE THE "ANGLE OF REPOSE" METHOD ON THIS PROJECT. THE TRENCH BOX METHOD OR THE SHORING, SHEETING AND BRACING METHOD SHALL BE USED.
12. PIPE PLUGS FOR EXISTING LINES TO BE ABANDONED SHALL CONSIST OF CUTTING EXISTING WASTEWATER PIPE(S), REMOVING CUT PIPE(S) AND PLUGGING/FILLING MIN 18" LENGTH OF EXISTING PIPE(S) WITH TYPE A TxDOT CONCRETE ITEM 421.
13. ALL STUB-OUTS, ETC, FOR FUTURE CONNECTIONS SHALL BE SEALED WITH A MANUFACTURED PLUG OR CAP MADE SPECIFICALLY FOR THE PURPOSE OF PREVENTING LEAKAGE INTO THE PIPE.
14. CONTRACTOR SHALL CONSTRUCT STABILIZED CONSTRUCTION ENTRANCES (SCE) PRIOR TO CONSTRUCTION. LOCATIONS OF SCE SHALL BE PER ENGINEER.
15. ALL BORE PITS SHOWN ON THE DRAWINGS ARE SCHEMATIC. CONTRACTOR SHALL DETERMINE THE REQUIRED SIZE AND CONFIGURATION OF ALL BORE PITS.
16. THE STEEL CASINGS MAY BE DEPICTED ON THE DRAWINGS WIDER THAN ACTUAL SPECIFIED DIAMETER FOR VISUAL CLARITY PURPOSES ONLY.
17. ALL MANHOLES SHALL BE COATED WITH A CORROSION RESISTANT LINING. SEE NOTE 4, CITY OF GEORGETOWN STANDARD DETAIL WW03 ON CD-02.
18. IMMEDIATELY FOLLOWING THE JACKING OPERATION FOR CASING INSTALLATION, PRESSURE GROUT THE JACKED SECTION TO FILL ALL VOIDS IN THE ANNULAR SPACE OUTSIDE OF THE CASING. GROUTING SHALL BE CONDUCTED FROM THE INTERIOR OF THE CASING THROUGH GROUTING HOLES. ALL HOLES SHALL BE PLUGGED UPON COMPLETION OF WORK.
19. CONTRACTOR SHALL LOCATE SITE ACCESS POINTS AND INSTALL STABILIZED CONSTRUCTION ENTRANCES AT ALL EXIT POINTS ONTO PAVEMENT.
20. CONTRACTOR SHALL PROVIDE PEDESTRIAN AND VEHICULAR TRAFFIC CONTROL IN ACCORDANCE WITH CITY OF GEORGETOWN AND TXDOT REQUIREMENTS.
21. TRENCH AND EXCAVATION SAFETY SHALL BE PROVIDED IN ACCORDANCE WITH LOCAL, STATE AND FEDERAL LOWS, REFER TO SPECIFICATIONS.
22. ALL WASTEWATER MANHOLE EXTERIORS SHALL BE SEALED WITH WRAPIDSEAL MANHOLE ENCAPSULATION SYSTEM BY CCI PIPELINE SYSTEMS OR ENGINEER APPROVED EQUAL PRODUCT. THE ENCAPSULATION SYSTEM SHALL BE INSTALLED IN STRICT ACCORDANCE WITH THE MANUFACTURER'S RECOMMENDATIONS AND REQUIREMENTS.
23. ALL TEMPORARY AND PERMANENT PLUGS ON PIPE AND ON MANHOLES SHALL EQUAL OR EXCEED THE STRENGTH RATING OF THE ADJACENT PIPE. ALL PLUGS WHICH WILL BE LEFT ON MANHOLES AND/OR PIPE AFTER BURIAL SHALL BE RESTRAINED.
24. ALL BORES ARE DEPICTED WITH STEEL CASING PIPE. AT TREE, CREEK AND TEE BOX BORES, THE STEEL CASING PIPE MAY BE DELETED AND CARRIER PIPE DIRECTLY PUSHED THROUGH THE BORE HOLE IF FIELD CONDITIONS WARRANT PROVIDED THAT THE PIPE MANUFACTURER PROVIDES A WRITTEN CERTIFICATION THAT THE PIPE, JOINTS AND GASKETS ARE RATED FOR DIRECT JACKING. THE ANNULAR SPACE AROUND ALL DIRECTLY JACKED PIPE SHALL BE COMPLETELY GROUTED.
25. THE CONTRACTOR SHALL INSTALL A CONCRETE TRENCH CAP AS SHOWN IN DETAIL H ON CD-4 AT ALL LOCATIONS SHOWN ON THE PLANS.

SAFETY:

1. TRENCH SAFETY SHALL BE IN ACCORDANCE WITH OCCUPATIONAL SAFETY AND HEALTH ADMINISTRATION CFR 29, PART 1926-SAFETY REGULATIONS FOR CONSTRUCTION, SUBPART P - EXCAVATIONS AND THE STATE OF TEXAS. EXCAVATION ACTIVITIES SHALL NOT COMMENCE PRIOR TO SUBMITTAL OF THE TRENCH SAFETY PLAN PER SPECIFICATION CIP11 TRENCH SAFETY REQUIREMENTS.
2. COORDINATE AND PERFORM WORK IN THE VICINITY OF HIGH VOLTAGE ELECTRIC POWER LINES IN ACCORDANCE WITH APPLICABLE TEXAS STATUES AND REQUIREMENTS OF THE ELECTRIC UTILITY OWNER.
3. OWNER, ENGINEER, AND CONTRACTOR SHALL ATTEND PRE-CONSTRUCTION CONFERENCE PRIOR TO THE START OF CONSTRUCTION. SCHEDULE THE PRE-CONSTRUCTION CONFERENCE AT LEAST 48-HOURS IN ADVANCE OF THE MEETING.

NOTICES FOR JURISDICTIONAL AUTHORITIES:

1. NOTIFY CITY OF GEORGETOWN PROJECT MANAGER, MR. DANIEL HAVINS, 512-930-6513 AT LEAST 48 HOURS PRIOR TO THE BEGINNING OF CONSTRUCTION WORK.
2. PORTIONS OF THE CONSTRUCTION OF THIS PROJECT WILL BE SUBJECT TO SUCH INSPECTION AND TESTS AS MAY BE DEEMED NECESSARY BY THE OWNER OR PERMIT GRANTING AUTHORITIES. FURNISH INFORMATION TO AUTHORITIES AS REQUIRED, AS WELL AS INCIDENTAL LABOR AND EQUIPMENT TO ALLOW TESTING PERSONNEL TO ACCESS THE WORK AND COOPERATE FULLY WITH THESE AUTHORITIES IN CONDUCTING THE TESTING AND INSPECTION PROGRAM. UNLESS STATED OTHERWISE IN THE PLANS OR PROJECT MANUAL, COSTS OF TESTING WILL BE AS SPECIFIED IN SECTION 00 700 - GENERAL CONDITIONS AND SECTION CIP13 SUMMARY OF TESTING.
3. NOTIFY THE AUTHORITY HAVING JURISDICTION PRIOR TO THE INSTALLATION OF ANY FACILITY WITHIN A DRAINAGE EASEMENT OR STREET R.O.W. THE METHODS OF PLACEMENT AND COMPACTION OF BACKFILL IN THE PUBLIC R.O.W. MUST BE APPROVED PRIOR TO START OF THE BACKFILL OPERATION.
   A. CITY OF GEORGETOWN UTILITIES - 512-930-3555 OR 512-930-3640.
   B. CITY OF GEORGETOWN STREETS AND TRANSPORTATION -512-930-8152.
   C. CITY OF GEORGETOWN ELECTRIC ENGINEERING - 512-930-3555 OR 512-930-3640.
   D. PEDERNALES ELECTRIC COOPERATIVE - 877-372-0391
   E. FRONTIER - 512-869-2231
   F. TEXAS ONE CALL - 811 OR 800-344-8377
   G. ENTERPRISE PRODUCT 844-308-7545
5. ARRANGE OPERATIONS TO AVOID UNNECESSARY IMPACTS TO THE PUBLIC IN CONSTRUCTION AREAS.

PROTECTION OF EXISTING UTILITIES:

1. THE INFORMATION SHOWN ON THE DRAWINGS INDICATING TYPE AND LOCATION OF UNDERGROUND, SURFACE, AND AERIAL UTILITIES IS NOT GUARANTEED TO BE EXACT OR COMPLETE. UTILITIES SHOWN REFLECT THE BEST INFORMATION AVAILABLE AT THE TIME THE PROJECT WAS DESIGNED/SURVEYED. DETERMINE THE EXACT TYPE AND LOCATION OF ALL UTILITIES AFFECTED BY CONSTRUCTION TO AVOID DAMAGING UTILITY. CONTACT THE "ONE CALL" SYSTEM AT 811 OR 1-800-545-6005 48 HOURS PRIOR TO BEGINNING ANY EXCAVATION AND SUBMIT ONE CALL CENTER CONFIRMATION NUMBER TO THE INSPECTOR.
2. IMMEDIATELY NOTIFY THE UTILITY OWNER OF DAMAGE TO UTILITIES. CONTRACTOR SHALL REPAIR ANY DAMAGED UTILITIES AT NO ADDITIONAL COST TO THE OWNER.
3. EXPLORE AHEAD OF TRENCHING AND EXCAVATION WORK AND UNCOVER OBSTRUCTING UNDERGROUND FACILITIES SUFFICIENTLY TO DETERMINE THEIR LOCATION. NOTIFY THE OWNER AND ENGINEER IMMEDIATELY OF ANY POTENTIAL CONFLICT BETWEEN THE WORK AND ANY EXISTING UNDERGROUND FACILITIES.
4. NOTIFY THE INSPECTOR IMMEDIATELY IF AN EXISTING UTILITY IS IN CONFLICT WITH THE PROPOSED CONSTRUCTION. BEFORE DISCONNECTING ANY UTILITY SERVICE LINE, PROVIDE AN ALTERNATE MEANS OF SERVICE FOR THE INTERRUPTED SECTION. ANY DAMAGE RESULTING FROM BACK FLOW OF WASTEWATER SHALL BE REPAIRED AT NO ADDITIONAL COST TO THE OWNER.
5. REIMBURSE THE OWNER FOR ALL COSTS INCURRED AS A RESULT OF ANY DAMAGE TO OWNER'S EXISTING UTILITIES.
6. MAINTAIN ADEQUATE DRAINAGE CONDITIONS AT ALL TIMES IN ACCORDANCE WITH THE CITY OF GEORGETOWN DRAINAGE CRITERIA MANUAL.

PROTECTION OF PRIVATE PROPERTY:

1. PROVIDE AND MAINTAIN SAFETY FENCING ALONG THE RIGHT OF WAY (ROW) LINE BETWEEN ALL DRIVEWAYS ADJACENT TO THE CONSTRUCTION AREA. SAFETY FENCING IS REQUIRED ALONG ANY EXCAVATION AREAS, ANY CONSTRUCTION AREAS SPECIFICALLY IDENTIFIED ON THE PLANS, AND AREAS IDENTIFIED BY THE ENGINEER BASED ON SITE SPECIFIC CONDITIONS. PROVIDE SAFETY FENCING AROUND PERIMETER OF EXCAVATION ACTIVITIES WHEN LIVESTOCK IS PRESENT.
2. NO HUNTING, FISHING OR RECREATION OF ANY SORT IS ALLOWABLE WITHIN THE PROJECT PROPERTY.

TRAFFIC CONTROL AND PEDESTRIAN :

1. ACCESS TO ALL SIDE STREETS AND DRIVEWAYS SHALL BE MAINTAINED AT ALL TIMES AT THE SOLE EXPENSE OF THE CONTRACTOR UNLESS OTHERWISE DIRECTED BY THE OWNER. COORDINATE WITH AFFECTED LANDOWNERS WHEN TEMPORARY DRIVEWAY ACCESS RESTRICTIONS ARE REQUIRED AND COORDINATE ALTERNATE MEANS OF INGRESS AND EGRESS AS REQUIRED.
2. FURNISH, INSTALL, AND MAINTAIN BARRICADES, WARNING SIGNS, FLASHERS AND OTHER TRAFFIC AND PEDESTRIAN CONTROL DEVICES OF THE TYPE AND SIZE AS INDICATED IN THE SUBMITTED TRAFFIC CONTROL PLANS. TRAFFIC CONTROL PLAN SHALL ADHERE TO THE REQUIREMENTS OF THE LATEST EDITION OF THE "TEXAS MANUAL ON UNIFORM TRAFFIC CONTROL DEVICES (MUTCD)."

CONSTRUCTION METHODS :

1. MAINTAIN A SAFE, NEAT, AND ORDERLY JOB SITE AT ALL TIMES IN ACCORDANCE WITH SECTION 00700 - GENERAL CONDITIONS.
2. PROTECT AND/OR RESTORE ALL SURFACES AND SUBSURFACE UTILITIES, BUILDINGS, STRUCTURES, AND OTHER FACILITIES ENCOUNTERED DURING CONSTRUCTION WHETHER OR NOT SHOWN ON THE DRAWINGS.
3. LIMIT CONSTRUCTION ACTIVITY, LAYDOWN, STORAGE, AND OTHER WORK TO WITHIN THE EASEMENT LIMITS, AND RESTORE ALL DAMAGED AREAS IN ACCORDANCE WITH THE SPECIFICATIONS.

STATE OF TEXAS
GERALD S. FURRIER
129811
LICENSED
PROFESSIONAL ENGINEER
04/30/2024

REV. NO.	DATE	DRWN	CHKD	REMARKS

DESIGNED BY:	A. KAJALE
DRAWN BY:	S. MANISANKAR
SHEET CHK'D BY:	ASHWIN G
CROSS CHK'D BY:	A. RHAMES
APPROVED BY:	G. FURRIER
DATE:	APRIL 2024

CDM Smith
8310-1 N Capital of Texas Hwy, Suite 250
Austin, TX 78731
Tel: (512) 346-1100
TBPELS Firm Registration No. F-3043

CITY OF GEORGETOWN, TEXAS

SOUTH LAKE TO SOUTH FORK WASTEWATER IMPROVEMENTS

GENERAL NOTES

PROJECT NO.	2048-272644
FILE NAME:	G005NFGN.dwg
SHEET NO.	G-5

XREFs: [CDMS_2234_South_lake_to_South_fork_Border_PP] Images: []
Last saved by: SAMIDURAIM Time: 03-05-2024 11:53:42
pw:\\cdmsmith-az02-pw.bentley.com:pw_pt1\2048\272644\04 Design Services NM_50%\01 General\10 BIM_CADD\G005NFGN.dwg

© 2022 CDM SMITH ALL RIGHTS RESERVED.
REUSE OF DOCUMENTS: THESE DOCUMENTS AND DESIGNS PROVIDED BY PROFESSIONAL SERVICE, INCORPORATED HEREIN, ARE THE PROPERTY OF CDM SMITH AND ARE NOT TO BE USED, IN WHOLE OR PART, FOR ANY OTHER PROJECT WITHOUT THE WRITTEN AUTHORIZATION OF CDM SMITH.

Plotted: 5/3/2024 12:29:21 PM

TEXAS COMMISSION ON ENVIRONMENTAL QUALITY ORGANIZED SEWAGE COLLECTION SYSTEM GENERAL CONSTRUCTION NOTES

1. THIS ORGANIZED SEWAGE COLLECTION SYSTEM MUST BE DESIGNED AND CONSTRUCTED IN ACCORDANCE WITH THE TEXAS COMMISSION ON ENVIRONMENTAL QUALITY'S (TCEQ) EDWARDS AQUIFER RULES 30 TEXAS ADMINISTRATIVE CODE (TAC) §§213.5(C) AND 217.51 – 217.70 AND 30 TAC CHAPTER 217, SUBCHAPTER D, AND THE CITY OF GEORGETOWN STANDARD SPECIFICATIONS.

2. ALL CONTRACTORS CONDUCTING REGULATED ACTIVITIES ASSOCIATED WITH THIS PROPOSED REGULATED PROJECT MUST BE PROVIDED WITH COPIES OF THE SEWAGE COLLECTION SYSTEM PLAN AND THE TCEQ LETTER INDICATING THE SPECIFIC CONDITIONS OF ITS APPROVAL. DURING THE COURSE OF THESE REGULATED ACTIVITIES, THE CONTRACTORS MUST BE REQUIRED TO KEEP ON-SITE COPIES OF THE PLAN AND THE APPROVAL LETTER.

3. NO LATER THAN 48 HOURS PRIOR TO COMMENCING ANY REGULATED ACTIVITY, THE APPLICANT OR HIS AGENT MUST NOTIFY THE AUSTIN REGIONAL OFFICE, IN WRITING, OF THE DATE ON WHICH THE REGULATED ACTIVITY WILL BEGIN.

4. ANY MODIFICATION TO THE ACTIVITIES DESCRIBED IN THE REFERENCED SCS APPLICATION FOLLOWING THE DATE OF APPROVAL MAY REQUIRE THE SUBMITTAL OF AN SCS APPLICATION TO MODIFY THIS APPROVAL, INCLUDING THE PAYMENT OF APPROPRIATE FEES AND ALL INFORMATION NECESSARY FOR ITS REVIEW AND APPROVAL.

5. ALL TEMPORARY EROSION AND SEDIMENTATION CONTROLS MUST BE INSTALLED PRIOR TO CONSTRUCTION, MUST BE MAINTAINED DURING CONSTRUCTION, AND MUST BE REMOVED WHEN SUFFICIENT VEGETATION IS ESTABLISHED TO CONTROL THE EROSION AND SEDIMENTATION AND THE CONSTRUCTION AREA IS STABILIZED.

6. IF ANY SENSITIVE FEATURES ARE DISCOVERED DURING THE WASTEWATER LINE TRENCHING ACTIVITIES, ALL REGULATED ACTIVITIES NEAR THE SENSITIVE FEATURE MUST BE SUSPENDED IMMEDIATELY. THE APPLICANT MUST IMMEDIATELY NOTIFY THE APPROPRIATE REGIONAL OFFICE OF THE TEXAS COMMISSION ON ENVIRONMENTAL QUALITY OF THE FEATURE DISCOVERED. A GEOLOGIST'S ASSESSMENT OF THE LOCATION AND EXTENT OF THE FEATURE DISCOVERED MUST BE REPORTED TO THAT REGIONAL OFFICE IN WRITING WITHIN TWO WORKING DAYS. THE APPLICANT MUST SUBMIT A PLAN FOR ENSURING THE STRUCTURAL INTEGRITY OF THE SEWER LINE OR FOR MODIFYING THE PROPOSED COLLECTION SYSTEM ALIGNMENT AROUND THE FEATURE. THE REGULATED ACTIVITIES NEAR THE SENSITIVE FEATURE MAY NOT PROCEED UNTIL THE EXECUTIVE DIRECTOR HAS REVIEWED AND APPROVED THE METHODS PROPOSED TO PROTECT THE SENSITIVE FEATURE AND THE EDWARDS AQUIFER FROM ANY POTENTIALLY ADVERSE IMPACTS TO WATER QUALITY WHILE MAINTAINING THE STRUCTURAL INTEGRITY OF THE LINE.

7. SEWER LINES LOCATED WITHIN OR CROSSING THE 5-YEAR FLOODPLAIN OF A DRAINAGE WAY WILL BE PROTECTED FROM INUNDATION AND STREAM VELOCITIES WHICH COULD CAUSE EROSION AND SCOURING OF BACKFILL. THE TRENCH MUST BE CAPPED WITH CONCRETE TO PREVENT SCOURING OF BACKFILL, OR THE SEWER LINES MUST BE ENCASED IN CONCRETE. ALL CONCRETE SHALL HAVE A MINIMUM THICKNESS OF SIX (6) INCHES.

8. BLASTING PROCEDURES FOR PROTECTION OF EXISTING SEWER LINES AND OTHER UTILITIES WILL BE IN ACCORDANCE WITH THE NATIONAL FIRE PROTECTION ASSOCIATION CRITERIA. SAND IS NOT ALLOWED AS BEDDING OR BACKFILL IN TRENCHES THAT HAVE BEEN BLASTED. IF ANY EXISTING SEWER LINES ARE DAMAGED, THE LINES MUST BE REPAIRED AND RETESTED.

9. ALL MANHOLES CONSTRUCTED OR REHABILITATED ON THIS PROJECT MUST HAVE WATERTIGHT SIZE ON SIZE RESILIENT CONNECTORS ALLOWING FOR DIFFERENTIAL SETTLEMENT. IF MANHOLES ARE CONSTRUCTED WITHIN THE 100-YEAR FLOODPLAIN, THE COVER MUST HAVE A GASKET AND BE BOLTED TO THE RING. WHERE GASKETED MANHOLE COVERS ARE REQUIRED FOR MORE THAN THREE MANHOLES IN SEQUENCE OR FOR MORE THAN 1500 FEET, ALTERNATE MEANS OF VENTING WILL BE PROVIDED. BRICKS ARE NOT AN ACCEPTABLE CONSTRUCTION MATERIAL FOR ANY PORTION OF THE MANHOLE.

   THE DIAMETER OF THE MANHOLES MUST BE A MINIMUM OF FOUR FEET AND THE MANHOLE FOR ENTRY MUST HAVE A MINIMUM CLEAR OPENING DIAMETER OF 30 INCHES. THESE DIMENSIONS AND OTHER DETAILS SHOWING COMPLIANCE WITH THE COMMISSION'S RULES CONCERNING MANHOLES AND SEWER LINE/MANHOLE INVERTS DESCRIBED IN 30 TAC §217.55 ARE INCLUDED ON PLAN SHEET -- OF --.

   IT IS SUGGESTED THAT ENTRANCE INTO MANHOLES IN EXCESS OF FOUR FEET DEEP BE ACCOMPLISHED BY MEANS OF A PORTABLE LADDER. THE INCLUSION OF STEPS IN A MANHOLE IS PROHIBITED.

11. WHERE WATER LINES AND NEW SEWER LINE ARE INSTALLED WITH A SEPARATION DISTANCE CLOSER THAN NINE FEET (I.E., WATER LINES CROSSING WASTEWATER LINES, WATER LINES PARALLELING WASTEWATER LINES, OR WATER LINES NEXT TO MANHOLES) THE INSTALLATION MUST MEET THE REQUIREMENTS OF 30 TAC §217.53(D) (PIPE DESIGN) AND 30 TAC §290.44(E) (WATER DISTRIBUTION).

12. WHERE SEWERS LINES DEVIATE FROM STRAIGHT ALIGNMENT AND UNIFORM GRADE ALL CURVATURE OF SEWER PIPE MUST BE ACHIEVED BY THE FOLLOWING PROCEDURE WHICH IS RECOMMENDED BY THE PIPE MANUFACTURER:

   IF PIPE FLEXURE IS PROPOSED, THE FOLLOWING METHOD OF PREVENTING DEFLECTION OF THE JOINT MUST BE USED:

   SPECIFIC CARE MUST BE TAKEN TO ENSURE THAT THE JOINT IS PLACED IN THE CENTER OF THE TRENCH AND PROPERLY BEDDED IN ACCORDANCE WITH 30 TAC §217.54.

13. NEW SEWAGE COLLECTION SYSTEM LINES MUST BE CONSTRUCTED WITH STUB OUTS FOR THE CONNECTION OF ANTICIPATED EXTENSIONS. THE LOCATION OF SUCH STUB OUTS MUST BE MARKED ON THE GROUND SUCH THAT THEIR LOCATION CAN BE EASILY DETERMINED AT THE TIME OF CONNECTION OF THE EXTENSIONS. SUCH STUB OUTS MUST BE MANUFACTURED WYES OR TEES THAT ARE COMPATIBLE IN SIZE AND MATERIAL WITH BOTH THE SEWER LINE AND THE EXTENSION. AT THE TIME OF ORIGINAL CONSTRUCTION, NEW STUB-OUTS MUST BE CONSTRUCTED SUFFICIENTLY TO EXTEND BEYOND THE END OF THE STREET PAVEMENT. ALL STUB-OUTS MUST BE SEALED WITH A MANUFACTURED CAP TO PREVENT LEAKAGE. EXTENSIONS THAT WERE NOT ANTICIPATED AT THE TIME OF ORIGINAL CONSTRUCTION OR THAT ARE TO BE CONNECTED TO AN EXISTING SEWER LINE NOT FURNISHED WITH STUB OUTS MUST BE CONNECTED USING A MANUFACTURED SADDLE AND IN ACCORDANCE WITH ACCEPTED PLUMBING TECHNIQUES.

   IF NO STUB-OUT IS PRESENT AN ALTERNATE METHOD OF JOINING LATERALS IS SHOWN IN THE DETAIL ON PLAN SHEET NA OF NA. (FOR POTENTIAL FUTURE LATERALS).

   THE PRIVATE SERVICE LATERAL STUB-OUTS MUST BE INSTALLED AS SHOWN ON THE PLAN AND PROFILE SHEETS ON PLAN SHEET NA OF NA AND MARKED AFTER BACKFILLING AS SHOWN IN THE DETAIL ON PLAN
   SHEET NA OF NA.

14. TRENCHING, BEDDING AND BACKFILL MUST CONFORM WITH 30 TAC §217.54. THE BEDDING AND BACKFILL FOR FLEXIBLE PIPE MUST COMPLY WITH THE STANDARDS OF ASTM D-2321, CLASSES IA, IB, II OR III. RIGID PIPE BEDDING MUST COMPLY WITH THE REQUIREMENTS OF ASTM C 12 (ANSI A 106.2) CLASSES A, B OR C.

15. SEWER LINES MUST BE TESTED FROM MANHOLE TO MANHOLE. WHEN A NEW SEWER LINE IS CONNECTED TO AN EXISTING STUB OR CLEAN-OUT, IT MUST BE TESTED FROM EXISTING MANHOLE TO NEW MANHOLE. IF A STUB OR CLEAN-OUT IS USED AT THE END OF THE PROPOSED SEWER LINE, NO PRIVATE SERVICE ATTACHMENTS MAY BE CONNECTED BETWEEN THE LAST MANHOLE AND THE CLEANOUT UNLESS IT CAN BE CERTIFIED AS CONFORMING WITH THE PROVISIONS OF 30 TAC §213.5(C)(3)(E).

16. ALL SEWER LINES MUST BE TESTED IN ACCORDANCE WITH 30 TAC §217.57. THE ENGINEER MUST RETAIN COPIES OF ALL TEST RESULTS WHICH MUST BE MADE AVAILABLE TO THE EXECUTIVE DIRECTOR UPON REQUEST. THE ENGINEER MUST CERTIFY IN WRITING THAT ALL WASTEWATER LINES HAVE PASSED ALL REQUIRED TESTING TO THE APPROPRIATE REGIONAL OFFICE WITHIN 30 DAYS OF TEST COMPLETION AND PRIOR TO USE OF THE NEW COLLECTION SYSTEM. TESTING METHOD WILL BE:

   (A) FOR A COLLECTION SYSTEM PIPE THAT WILL TRANSPORT WASTEWATER BY GRAVITY FLOW, THE DESIGN MUST SPECIFY AN INFILTRATION AND EXFILTRATION TEST OR A LOW-PRESSURE AIR TEST. A TEST MUST CONFORM TO THE FOLLOWING REQUIREMENTS:

   (1) LOW PRESSURE AIR TEST.

   (A) A LOW PRESSURE AIR TEST MUST FOLLOW THE PROCEDURES DESCRIBED IN AMERICAN SOCIETY FOR TESTING AND MATERIALS (ASTM) C-828, ASTM C-924, OR ASTM F-1417 OR OTHER PROCEDURE APPROVED BY THE EXECUTIVE DIRECTOR, EXCEPT AS TO TESTING TIMES AS REQUIRED IN TABLE C.3 IN SUBPARAGRAPH (C) OF THIS PARAGRAPH OR EQUATION C.3 IN SUBPARAGRAPH (B)(II) OF THIS PARAGRAPH.

   (B) FOR SECTIONS OF COLLECTION SYSTEM PIPE LESS THAN 36 INCH AVERAGE INSIDE DIAMETER, THE FOLLOWING PROCEDURE MUST APPLY, UNLESS A PIPE IS TO BE TESTED AS REQUIRED BY PARAGRAPH (2) OF THIS SUBSECTION.

      (I) A PIPE MUST BE PRESSURIZED TO 3.5 POUNDS PER SQUARE INCH (PSI) GREATER THAN THE PRESSURE EXERTED BY GROUNDWATER ABOVE THE PIPE.

      (II) ONCE THE PRESSURE IS STABILIZED, THE MINIMUM TIME ALLOWABLE FOR THE PRESSURE TO DROP FROM 3.5 PSI GAUGE TO 2.5 PSI GAUGE IS COMPUTED FROM THE FOLLOWING EQUATION:

      EQUATION C.3

      WHERE: $T = \frac{0.085 x D x K}{Q}$

      T = TIME FOR PRESSURE TO DROP 1.0 POUND PER SQUARE INCH GAUGE IN SECONDS
      K = 0.000419 X D X L, BUT NOT LESS THAN 1.0
      D = AVERAGE INSIDE PIPE DIAMETER IN INCHES
      L = LENGTH OF LINE OF SAME SIZE BEING TESTED, IN FEET
      Q = RATE OF LOSS, 0.0015 CUBIC FEET PER MINUTE PER SQUARE FOOT INTERNAL SURFACE

   (C) SINCE A K VALUE OF LESS THAN 1.0 MAY NOT BE USED, THE MINIMUM TESTING TIME FOR EACH PIPE DIAMETER IS SHOWN IN THE FOLLOWING TABLE C.3:

PIPE DIAMETER (INCHES)	MINIMUM TIME (SECONDS)	MAXIMUM LENGTH FOR MINIMUM TIME (FEET)	TIME FOR LONGER LENGTH (SECONDS/FOOT)
6	340	398	0.855
8	454	298	1.520
10	567	239	2.374
12	680	199	3.419
15	850	159	5.342
18	1020	133	7.693
21	1190	114	10.471
24	1360	100	13.676
27	1530	88	17.309
30	1700	80	21.369
33	1870	72	25.856

   (D) AN OWNER MAY STOP A TEST IF NO PRESSURE LOSS HAS OCCURRED DURING THE FIRST 25% OF THE CALCULATED TESTING TIME.

   (E) IF ANY PRESSURE LOSS OR LEAKAGE HAS OCCURRED DURING THE FIRST 25% OF A TESTING PERIOD, THEN THE TEST MUST CONTINUE FOR THE ENTIRE TEST DURATION AS OUTLINED ABOVE OR UNTIL FAILURE.

   (F) WASTEWATER COLLECTION SYSTEM PIPES WITH A 27 INCH OR LARGER AVERAGE INSIDE DIAMETER MAY BE AIR TESTED AT EACH JOINT INSTEAD OF FOLLOWING THE PROCEDURE OUTLINED IN THIS SECTION.

   (G) A TESTING PROCEDURE FOR PIPE WITH AN INSIDE DIAMETER GREATER THAN 33 INCHES MUST BE APPROVED BY THE EXECUTIVE DIRECTOR.

   (2) INFILTRATION/EXFILTRATION TEST.

   (A) THE TOTAL EXFILTRATION, AS DETERMINED BY A HYDROSTATIC HEAD TEST, MUST NOT EXCEED 50 GALLONS PER INCH OF DIAMETER PER MILE OF PIPE PER 24 HOURS AT A MINIMUM TEST HEAD OF 2.0 FEET ABOVE THE CROWN OF A PIPE AT AN UPSTREAM MANHOLE.

   (B) AN OWNER SHALL USE AN INFILTRATION TEST IN LIEU OF AN EXFILTRATION TEST WHEN PIPES ARE INSTALLED BELOW THE GROUNDWATER LEVEL.

   (C) THE TOTAL EXFILTRATION, AS DETERMINED BY A HYDROSTATIC HEAD TEST, MUST NOT EXCEED 50 GALLONS PER INCH DIAMETER PER MILE OF PIPE PER 24 HOURS AT A MINIMUM TEST HEAD OF TWO FEET ABOVE THE CROWN OF A PIPE AT AN UPSTREAM MANHOLE, OR AT LEAST TWO FEET ABOVE EXISTING GROUNDWATER LEVEL, WHICHEVER IS GREATER.

   (D) FOR CONSTRUCTION WITHIN A 25-YEAR FLOOD PLAIN, THE INFILTRATION OR EXFILTRATION MUST NOT EXCEED 10 GALLONS PER INCH DIAMETER PER MILE OF PIPE PER 24 HOURS AT THE SAME MINIMUM TEST HEAD AS IN SUBPARAGRAPH (C) OF THIS PARAGRAPH.

   (E) IF THE QUANTITY OF INFILTRATION OR EXFILTRATION EXCEEDS THE MAXIMUM QUANTITY SPECIFIED, AN OWNER SHALL UNDERTAKE REMEDIAL ACTION IN ORDER TO REDUCE THE INFILTRATION OR EXFILTRATION TO AN AMOUNT WITHIN THE LIMITS SPECIFIED. AN OWNER SHALL RETEST A PIPE FOLLOWING A REMEDIATION ACTION.

   (B) IF A GRAVITY COLLECTION PIPE IS COMPOSED OF FLEXIBLE PIPE, DEFLECTION TESTING IS ALSO REQUIRED. THE FOLLOWING PROCEDURES MUST BE FOLLOWED:

   (1) FOR A COLLECTION PIPE WITH INSIDE DIAMETER LESS THAN 27 INCHES, DEFLECTION MEASUREMENT REQUIRES A RIGID MANDREL.

      (A) MANDREL SIZING.
         (I) A RIGID MANDREL MUST HAVE AN OUTSIDE DIAMETER (OD) NOT LESS THAN 95% OF THE BASE INSIDE DIAMETER (ID) OR AVERAGE ID OF A PIPE, AS SPECIFIED IN THE APPROPRIATE STANDARD BY THE ASTMS, AMERICAN WATER WORKS ASSOCIATION, UNI-BELL, OR AMERICAN NATIONAL STANDARDS INSTITUTE, OR ANY RELATED APPENDIX.

         (II) IF A MANDREL SIZING DIAMETER IS NOT SPECIFIED IN THE APPROPRIATE STANDARD, THE MANDREL MUST HAVE AN OD EQUAL TO 95% OF THE ID OF A PIPE. IN THIS CASE, THE ID OF THE PIPE, FOR THE PURPOSE OF DETERMINING THE OD OF THE MANDREL, MUST EQUAL BE THE AVERAGE OUTSIDE DIAMETER MINUS TWO MINIMUM WALL THICKNESSES FOR OD CONTROLLED PIPE AND THE AVERAGE INSIDE DIAMETER FOR ID CONTROLLED PIPE.

         (III) ALL DIMENSIONS MUST MEET THE APPROPRIATE STANDARD.

      (B) MANDREL DESIGN.
         (I) A RIGID MANDREL MUST BE CONSTRUCTED OF A METAL OR A RIGID PLASTIC MATERIAL THAT CAN WITHSTAND 200 PSI WITHOUT BEING DEFORMED.

         (II) A MANDREL MUST HAVE NINE OR MORE ODD NUMBER OF RUNNERS OR LEGS.

         (III) A BARREL SECTION LENGTH MUST EQUAL AT LEAST 75% OF THE INSIDE DIAMETER OF A PIPE.

         (IV) EACH SIZE MANDREL MUST USE A SEPARATE PROVING RING.

      (C) METHOD OPTIONS.
         (I) AN ADJUSTABLE OR FLEXIBLE MANDREL IS PROHIBITED.

         (II) A TEST MAY NOT USE TELEVISION INSPECTION AS A SUBSTITUTE FOR A DEFLECTION TEST.

         (III) IF REQUESTED, THE EXECUTIVE DIRECTOR MAY APPROVE THE USE OF A DEFLECTOMETER OR A MANDREL WITH REMOVABLE LEGS OR RUNNERS ON A CASE-BY-CASE BASIS.

   (2) FOR A GRAVITY COLLECTION SYSTEM PIPE WITH AN INSIDE DIAMETER 27 INCHES AND GREATER, OTHER TEST METHODS MAY BE USED TO DETERMINE VERTICAL DEFLECTION.

   (3) A DEFLECTION TEST METHOD MUST BE ACCURATE TO WITHIN PLUS OR MINUS 0.2% DEFLECTION.

   (4) AN OWNER SHALL NOT CONDUCT A DEFLECTION TEST UNTIL AT LEAST 30 DAYS AFTER THE FINAL BACKFILL.

   (5) GRAVITY COLLECTION SYSTEM PIPE DEFLECTION MUST NOT EXCEED FIVE PERCENT (5%).

   (6) IF A PIPE SECTION FAILS A DEFLECTION TEST, AN OWNER SHALL CORRECT THE PROBLEM AND CONDUCT A SECOND TEST AFTER THE FINAL BACKFILL HAS BEEN IN PLACE AT LEAST 30 DAYS.

17. ALL MANHOLES MUST BE TESTED TO MEET OR EXCEED THE REQUIREMENTS OF 30 TAC §217.58.
   (A) ALL MANHOLES MUST PASS A LEAKAGE TEST.

   (B) AN OWNER SHALL TEST EACH MANHOLE (AFTER ASSEMBLY AND BACKFILLING) FOR LEAKAGE, SEPARATE AND INDEPENDENT OF THE COLLECTION SYSTEM PIPES, BY HYDROSTATIC EXFILTRATION TESTING, VACUUM TESTING, OR OTHER METHOD APPROVED BY THE EXECUTIVE DIRECTOR.

   (1) HYDROSTATIC TESTING.
      (A) THE MAXIMUM LEAKAGE FOR HYDROSTATIC TESTING OR ANY ALTERNATIVE TEST METHODS IS 0.025 GALLONS PER FOOT DIAMETER PER FOOT OF MANHOLE DEPTH PER HOUR.
      (B) TO PERFORM A HYDROSTATIC EXFILTRATION TEST, AN OWNER SHALL SEAL ALL WASTEWATER PIPES COMING INTO A MANHOLE WITH AN INTERNAL PIPE PLUG, FILL THE MANHOLE WITH WATER, AND MAINTAIN THE TEST FOR AT LEAST ONE HOUR.
      (C) A TEST FOR CONCRETE MANHOLES MAY USE A 24-HOUR WETTING PERIOD BEFORE TESTING TO ALLOW SATURATION OF THE CONCRETE.
   (2) VACUUM TESTING.
      (A) TO PERFORM A VACUUM TEST, AN OWNER SHALL PLUG ALL LIFT HOLES AND EXTERIOR JOINTS WITH A NON-SHRINK GROUT AND PLUG ALL PIPES ENTERING A MANHOLE.

      (B) NO GROUT MUST BE PLACED IN HORIZONTAL JOINTS BEFORE TESTING.

      (C) STUB-OUTS, MANHOLE BOOTS, AND PIPE PLUGS MUST BE SECURED TO PREVENT MOVEMENT WHILE A VACUUM IS DRAWN.

      (D) AN OWNER SHALL USE A MINIMUM 60 INCH/LB TORQUE WRENCH TO TIGHTEN THE EXTERNAL CLAMPS THAT SECURE A TEST COVER TO THE TOP OF A MANHOLE.

      (E) A TEST HEAD MUST BE PLACED AT THE INSIDE OF THE TOP OF A CONE SECTION, AND THE SEAL INFLATED IN ACCORDANCE WITH THE MANUFACTURER'S RECOMMENDATIONS.

      (F) THERE MUST BE A VACUUM OF 10 INCHES OF MERCURY INSIDE A MANHOLE TO PERFORM A VALID TEST.

      (G) A TEST DOES NOT BEGIN UNTIL AFTER THE VACUUM PUMP IS OFF.

      (H) A MANHOLE PASSES THE TEST IF AFTER 2.0 MINUTES AND WITH ALL VALVES CLOSED, THE VACUUM IS AT LEAST 9.0 INCHES OF MERCURY.

18. ALL PRIVATE SERVICE LATERALS MUST BE INSPECTED AND CERTIFIED IN ACCORDANCE WITH 30 TAC §213.5(C)(3)(I). AFTER INSTALLATION OF AND, PRIOR TO COVERING AND CONNECTING A PRIVATE SERVICE LATERAL TO AN EXISTING ORGANIZED SEWAGE COLLECTION SYSTEM, A TEXAS LICENSED PROFESSIONAL ENGINEER, TEXAS REGISTERED SANITARIAN, OR APPROPRIATE CITY INSPECTOR MUST VISUALLY INSPECT THE PRIVATE SERVICE LATERAL AND THE CONNECTION TO THE SEWAGE COLLECTION SYSTEM, AND CERTIFY THAT IT IS CONSTRUCTED IN CONFORMITY WITH THE APPLICABLE PROVISIONS OF THIS SECTION. THE OWNER OF THE COLLECTION SYSTEM MUST MAINTAIN SUCH CERTIFICATIONS FOR FIVE YEARS AND FORWARD COPIES TO THE APPROPRIATE REGIONAL OFFICE UPON REQUEST. CONNECTIONS MAY ONLY BE MADE TO AN APPROVED SEWAGE COLLECTION SYSTEM.

   THESE GENERAL CONSTRUCTION NOTES MUST BE INCLUDED ON THE CONSTRUCTION PLANS PROVIDED TO THE CONTRACTOR AND ALL SUBCONTRACTORS.

   TCEQ-0596 (Rev. 10/01/10)

TCEQ LIFT STATION AND FORCE MAIN GENERAL CONSTRUCTION NOTES:

1. THIS LIFT STATION AND/OR FORCE MAIN MUST BE CONSTRUCTED IN ACCORDANCE WITH 30 TEXAS ADMINISTRATIVE CODE (TAC) §213.5(C), THE TEXAS COMMISSION ON ENVIRONMENTAL QUALITY (TCEQ) EDWARDS AQUIFER RULES, AND ANY LOCAL GOVERNMENT STANDARD SPECIFICATIONS.

2. ANY MODIFICATION TO THE ACTIVITIES DESCRIBED IN THE REFERENCED LIFT STATION/FORCE MAIN (LSFM) SYSTEM APPLICATION FOLLOWING THE DATE OF APPROVAL MAY REQUIRE THE SUBMITTAL OF A LSFM SYSTEM APPLICATION TO MODIFY THIS APPROVAL, INCLUDING THE PAYMENT OF APPROPRIATE FEES AND ALL INFORMATION NECESSARY FOR ITS REVIEW AND APPROVAL.

3. A WRITTEN NOTICE OF CONSTRUCTION MUST BE SUBMITTED TO THE PRESIDING TCEQ REGIONAL OFFICE AT LEAST 48 HOURS PRIOR TO THE START OF ANY REGULATED ACTIVITIES. THIS NOTICE MUST INCLUDE:

   - THE NAME OF THE APPROVED PROJECT;
   - THE ACTIVITY START DATE; AND
   - THE CONTACT INFORMATION OF THE PRIME CONTRACTOR.

4. UPON COMPLETION OF ANY LIFT STATION EXCAVATION, A GEOLOGIST MUST CERTIFY THAT THE EXCAVATION HAS BEEN INSPECTED FOR THE PRESENCE OF SENSITIVE FEATURES. THE CERTIFICATION MUST BE SIGNED, SEALED, AND DATED BY THE GEOLOGIST PREPARING THE CERTIFICATION. CERTIFICATION THAT THE EXCAVATION HAS BEEN INSPECTED MUST BE SUBMITTED TO THE APPROPRIATE REGIONAL OFFICE.

   - IF SENSITIVE FEATURE(S) ARE IDENTIFIED, ALL REGULATED ACTIVITIES NEAR THE SENSITIVE FEATURE MUST BE SUSPENDED IMMEDIATELY AND MAY NOT PROCEED UNTIL THE EXECUTIVE DIRECTOR HAS REVIEWED AND APPROVED THE METHODS PROPOSED TO PROTECT ANY SENSITIVE FEATURE AND THE EDWARDS AQUIFER FROM POTENTIALLY ADVERSE IMPACTS TO WATER QUALITY FROM THE LIFT STATION.

   - CONSTRUCTION MAY CONTINUE IF THE GEOLOGIST CERTIFIES THAT NO SENSITIVE FEATURE OR FEATURES WERE PRESENT.

5. IF ANY SENSITIVE FEATURES ARE DISCOVERED DURING THE WASTEWATER LINE TRENCHING ACTIVITIES, ALL REGULATED ACTIVITIES NEAR THE SENSITIVE FEATURE MUST BE SUSPENDED IMMEDIATELY. THE APPLICANT MUST IMMEDIATELY NOTIFY THE APPROPRIATE REGIONAL OFFICE OF THE TCEQ OF THE FEATURE DISCOVERY. A GEOLOGIST'S ASSESSMENT OF THE LOCATION AND EXTENT OF THE FEATURE DISCOVERED MUST BE REPORTED TO THAT REGIONAL OFFICE IN WRITING WITHIN TWO WORKING DAYS. THE APPLICANT MUST SUBMIT A PLAN FOR ENSURING THE STRUCTURAL INTEGRITY OF THE SEWER LINE OR FOR MODIFYING THE PROPOSED COLLECTION SYSTEM ALIGNMENT AROUND THE FEATURE. THE REGULATED ACTIVITIES NEAR THE SENSITIVE FEATURE MAY NOT PROCEED UNTIL THE EXECUTIVE DIRECTOR HAS REVIEWED AND APPROVED THE METHODS PROPOSED TO PROTECT THE SENSITIVE FEATURE AND THE EDWARDS AQUIFER FROM ANY POTENTIALLY ADVERSE IMPACTS TO WATER QUALITY WHILE MAINTAINING THE STRUCTURAL INTEGRITY OF THE LINE.

6. ALL FORCE MAIN LINES MUST BE TESTED IN ACCORDANCE WITH 30 TAC §217.68. TESTING METHOD WILL BE:

   - A PRESSURE TEST MUST USE 50 POUNDS PER SQUARE INCH ABOVE THE NORMAL OPERATING PRESSURE OF A FORCE MAIN.

   - A TEMPORARY VALVE FOR PRESSURE TESTING MAY BE INSTALLED NEAR THE DISCHARGE POINT OF A FORCE MAIN AND REMOVED AFTER A TEST IS SUCCESSFULLY COMPLETED.

   - A PUMP ISOLATION VALVE MAY BE USED AS AN OPPOSITE TERMINATION POINT.

   - A TEST MUST INVOLVE FILLING A FORCE MAIN WITH WATER.

   - A PIPE MUST HOLD THE DESIGNATED TEST PRESSURE FOR A MINIMUM OF 4.0 HOURS.

   - THE LEAKAGE RATE MUST NOT EXCEED 10.0 GALLONS PER INCH DIAMETER PER MILE OF PIPE PER DAY.

STATE OF TEXAS
GERALD S. FURRIER
129811
LICENSED
PROFESSIONAL ENGINEER
04/30/2024

REV. NO.	DATE	DRWN	CHKD	REMARKS

DESIGNED BY: A. KAJALE
DRAWN BY: S MANISANKAR
SHEET CHK'D BY: ASHWIN G
CROSS CHK'D BY: A. RHAMES
APPROVED BY: G. FURRIER
DATE: APRIL 2024

CDM Smith
8310-1 N Capital of Texas Hwy, Suite 250
Austin, TX 78731
Tel: (512) 346-1100
TBPELS Firm Registration No. F-3043

CITY OF GEORGETOWN, TEXAS
SOUTH LAKE TO SOUTH FORK WASTEWATER IMPROVEMENTS

STANDARD TCEQ GENERAL CONSTRUCTION NOTES I

PROJECT NO. 2048-272644
FILE NAME: G006NFGN.dwg
SHEET NO.
G-6

XREFs: [CDMS_2234_South_lake_to_South_fork_Border_PP] Images: []
Last saved by: SAMIDURAIM, Time: 03-05-2024 11:44:49
pw:\\cdtsmith-wa02-pw.bentley.com:pw_pf\2048\272644\04 Design Services NM_50%\01 General\10 BIM_CAD\DG006NFGN.dwg
© 2022 CDM SMITH ALL RIGHTS RESERVED.
REUSE OF DOCUMENTS: THESE DOCUMENTS AND DESIGNS PROVIDED BY PROFESSIONAL SERVICE, INCORPORATED HEREIN, ARE THE PROPERTY OF CDM SMITH AND ARE NOT TO BE USED, IN WHOLE OR PART, FOR ANY OTHER PROJECT WITHOUT THE WRITTEN AUTHORIZATION OF CDM SMITH.
Plotted: 5/3/2024 12:28:26 PM

CONSTRUCTION GENERAL PERMIT
TPDES GENERAL PERMIT TXR150000

THE SWP3 MUST INCLUDE, AT A MINIMUM, THE INFORMATION DESCRIBED IN THIS SECTION.

1. A SITE OR PROJECT DESCRIPTION, WHICH INCLUDES THE FOLLOWING INFORMATION:
   (A) A DESCRIPTION OF THE NATURE OF THE CONSTRUCTION ACTIVITY;

   (B) A LIST OF POTENTIAL POLLUTANTS AND THEIR SOURCES;

   (C) A DESCRIPTION OF THE INTENDED SCHEDULE OR SEQUENCE OF ACTIVITIES THAT WILL DISTURB SOILS FOR MAJOR PORTIONS OF THE SITE;

   (D) THE TOTAL NUMBER OF ACRES OF THE ENTIRE PROPERTY AND THE TOTAL NUMBER OF ACRES WHERE CONSTRUCTION ACTIVITIES WILL OCCUR, INCLUDING OFF-SITE MATERIAL STORAGE AREAS, OVERBURDEN AND STOCKPILES OF DIRT, AND BORROW AREAS THAT ARE AUTHORIZED UNDER THE PERMITTEE'S NOI;

   (E) DATA DESCRIBING THE SOIL OR THE QUALITY OF ANY DISCHARGE FROM THE SITE;

   (F) A MAP SHOWING THE GENERAL LOCATION OF THE SITE (E.G. A PORTION OF A CITY OR COUNTY MAP);

   (G) A DETAILED SITE MAP (OR MAPS) INDICATING THE FOLLOWING:

   (I) DRAINAGE PATTERNS AND APPROXIMATE SLOPES ANTICIPATED AFTER MAJOR GRADING ACTIVITIES;

   (II) AREAS WHERE SOIL DISTURBANCE WILL OCCUR;

   (III) LOCATIONS OF ALL MAJOR STRUCTURAL CONTROLS EITHER PLANNED OR IN PLACE;

   (IV) LOCATIONS WHERE TEMPORARY OR PERMANENT STABILIZATION PRACTICES ARE EXPECTED TO BE USED;

   (V) LOCATIONS OF CONSTRUCTION SUPPORT ACTIVITIES, INCLUDING OFF-SITE ACTIVITIES, THAT ARE AUTHORIZED UNDER THE PERMITTEE'S NOI, INCLUDING MATERIAL, WASTE, BORROW, FILL, OR EQUIPMENT STORAGE AREAS;

   (VI) SURFACE WATERS (INCLUDING WETLANDS) EITHER AT, ADJACENT, OR IN CLOSE PROXIMITY TO THE SITE;

   (VII) LOCATIONS WHERE STORM WATER DISCHARGES FROM THE SITE DIRECTLY TO A SURFACE WATER BODY OR A MUNICIPAL SEPARATE STORM SEWER SYSTEM; AND

   (VIII) VEHICLE WASH AREAS.
   WHERE THE AMOUNT OF INFORMATION REQUIRED TO BE INCLUDED ON THE MAP WOULD RESULT IN A SINGLE MAP BEING DIFFICULT TO READ AND INTERPRET, THE OPERATOR SHALL DEVELOP A SERIES OF MAPS THAT COLLECTIVELY INCLUDE THE REQUIRED INFORMATION.

   (H) THE LOCATION AND DESCRIPTION OF SUPPORT ACTIVITIES AUTHORIZED UNDER THE PERMITTEE'S NOI, INCLUDING ASPHALT PLANTS, CONCRETE PLANTS, AND OTHER ACTIVITIES PROVIDING SUPPORT TO THE CONSTRUCTION SITE THAT IS AUTHORIZED UNDER THIS GENERAL PERMIT;

   (I) THE NAME OF RECEIVING WATERS AT OR NEAR THE SITE THAT MAY BE DISTURBED OR THAT MAY RECEIVE DISCHARGES FROM DISTURBED AREAS OF THE PROJECT;

   (J) A COPY OF THIS TPDES GENERAL PERMIT, AND

   (K) THE NOTICE OF INTENT (NOI) AND ACKNOWLEDGEMENT CERTIFICATE FOR PRIMARY OPERATORS OF LARGE CONSTRUCTION SITES, AND THE SITE NOTICE FOR SMALL CONSTRUCTION SITES AND FOR SECONDARY OPERATORS OF LARGE CONSTRUCTION SITES.

2. A DESCRIPTION OF THE BEST MANAGEMENT PRACTICES (BMPS) THAT WILL BE USED TO MINIMIZE POLLUTION IN RUNOFF.
   THE DESCRIPTION MUST IDENTIFY THE GENERAL TIMING OR SEQUENCE FOR IMPLEMENTATION. AT A MINIMUM, THE DESCRIPTION MUST INCLUDE THE FOLLOWING COMPONENTS:

   (A) GENERAL REQUIREMENTS:

   (I) EROSION AND SEDIMENT CONTROLS MUST BE DESIGNED TO RETAIN SEDIMENT ON-SITE TO THE EXTENT PRACTICABLE WITH CONSIDERATION FOR LOCAL TOPOGRAPHY, SOIL TYPE, AND RAINFALL.

   (II) CONTROL MEASURES MUST BE PROPERLY SELECTED, INSTALLED, AND MAINTAINED ACCORDING TO THE MANUFACTURER'S OR DESIGNER'S SPECIFICATIONS.

   (III) CONTROLS MUST BE DEVELOPED TO MINIMIZE THE OFFSITE TRANSPORT OF LITTER,CONSTRUCTION DEBRIS, AND CONSTRUCTION MATERIALS.

   (B) EROSION CONTROL AND STABILIZATION PRACTICES
   THE SWP3 MUST INCLUDE A DESCRIPTION OF TEMPORARY AND PERMANENT EROSION CONTROL AND STABILIZATION PRACTICES FOR THE SITE, INCLUDING A SCHEDULE OF WHEN THE PRACTICES WILL BE IMPLEMENTED. SITE PLANS SHOULD ENSURE THAT EXISTING VEGETATION IS PRESERVED WHERE IT IS POSSIBLE.

   (I) EROSION CONTROL AND STABILIZATION PRACTICES MAY INCLUDE BUT ARE NOT LIMITED TO: ESTABLISHMENT OF TEMPORARY OR PERMANENT VEGETATION, MULCHING, GEOTEXTILES,SOD STABILIZATION, VEGETATIVE BUFFER STRIPS, PROTECTION OF EXISTING TREES AND VEGETATION, SLOPE TEXTURING, TEMPORARY VELOCITY DISSIPATION DEVICES, FLOW DIVERSION MECHANISMS, AND OTHER SIMILAR MEASURES.

   (II) THE FOLLOWING RECORDS MUST BE MAINTAINED AND EITHER ATTACHED TO OR REFERENCED IN THE SWP3, AND MADE READILY AVAILABLE UPON REQUEST TO THE PARTIES LISTED IN PART III.D.1 OF THIS GENERAL PERMIT:

   (A) THE DATES WHEN MAJOR GRADING ACTIVITIES OCCUR;

   (B) THE DATES WHEN CONSTRUCTION ACTIVITIES TEMPORARILY OR PERMANENTLY CEASE ON A PORTION OF THE SITE; AND

   (C) THE DATES WHEN STABILIZATION MEASURES ARE INITIATED.

   (III) EROSION CONTROL AND STABILIZATION MEASURES MUST BE INITIATED AS SOON AS PRACTICABLE IN PORTIONS OF THE SITE WHERE CONSTRUCTION ACTIVITIES HAVE TEMPORARILY CEASED. STABILIZATION MEASURES THAT PROVIDE A PROTECTIVE COVER MUST BE INITIATED AS SOON AS PRACTICABLE IN PORTIONS OF THE SITE WHERE CONSTRUCTION ACTIVITIES HAVE PERMANENTLY CEASED. EXCEPT AS PROVIDED IN (A) THROUGH (D) BELOW, THESE MEASURES MUST BE INITIATED NO MORE THAN 14 DAYS AFTER THE CONSTRUCTION ACTIVITY IN THAT PORTION OF THE SITE HAS TEMPORARILY OR PERMANENTLY CEASED.

TEXAS COMMISSION ON ENVIRONMENTAL QUALITY
WATER POLLUTION ABATEMENT PLAN
GENERAL CONSTRUCTION NOTES

1. A WRITTEN NOTICE OF CONSTRUCTION MUST BE SUBMITTED TO THE TCEQ REGIONAL OFFICE AT LEAST 48 HOURS PRIOR TO THE START OF ANY REGULATED ACTIVITIES. THIS NOTICE MUST INCLUDE:
   - THE NAME OF THE APPROVED PROJECT;
   - THE ACTIVITY START DATE; AND
   - THE CONTACT INFORMATION OF THE PRIME CONTRACTOR.

2. ALL CONTRACTORS CONDUCTING REGULATED ACTIVITIES ASSOCIATED WITH THIS PROJECT MUST BE PROVIDED WITH COMPLETE COPIES OF THE APPROVED WATER POLLUTION ABATEMENT PLAN (WPAP) AND THE TCEQ LETTER INDICATING THE SPECIFIC CONDITIONS OF ITS APPROVAL. DURING THE COURSE OF THESE REGULATED ACTIVITIES, THE CONTRACTORS ARE REQUIRED TO KEEP ON-SITE COPIES OF THE APPROVED PLAN AND APPROVAL LETTER.

3. IF ANY SENSITIVE FEATURE(S) (CAVES, SOLUTION CAVITY, SINK HOLE, ETC.) IS DISCOVERED DURING CONSTRUCTION, ALL REGULATED ACTIVITIES NEAR THE SENSITIVE FEATURE MUST BE SUSPENDED IMMEDIATELY. THE APPROPRIATE TCEQ REGIONAL OFFICE MUST BE IMMEDIATELY NOTIFIED OF ANY SENSITIVE FEATURES ENCOUNTERED DURING CONSTRUCTION. CONSTRUCTION ACTIVITIES MAY NOT BE RESUMED UNTIL THE TCEQ HAS REVIEWED AND APPROVED THE APPROPRIATE PROTECTIVE MEASURES IN ORDER TO PROTECT ANY SENSITIVE FEATURE AND THE EDWARDS AQUIFER FROM POTENTIALLY ADVERSE IMPACTS TO WATER QUALITY.

4. NO TEMPORARY OR PERMANENT HAZARDOUS SUBSTANCE STORAGE TANK SHALL BE INSTALLED WITHIN 150 FEET OF A WATER SUPPLY SOURCE, DISTRIBUTION SYSTEM, WELL, OR SENSITIVE FEATURE.

5. PRIOR TO BEGINNING ANY CONSTRUCTION ACTIVITY, ALL TEMPORARY EROSION AND SEDIMENTATION (E&S) CONTROL MEASURES MUST BE PROPERLY INSTALLED AND MAINTAINED IN ACCORDANCE WITH THE APPROVED PLANS AND MANUFACTURERS SPECIFICATIONS. IF INSPECTIONS INDICATE A CONTROL HAS BEEN USED INAPPROPRIATELY, OR INCORRECTLY, THE APPLICANT MUST REPLACE OR MODIFY THE CONTROL FOR SITE SITUATIONS. THESE CONTROLS MUST REMAIN IN PLACE UNTIL THE DISTURBED AREAS HAVE BEEN PERMANENTLY STABILIZED.

6. ANY SEDIMENT THAT ESCAPES THE CONSTRUCTION SITE MUST BE COLLECTED AND PROPERLY DISPOSED OF BEFORE THE NEXT RAIN EVENT TO ENSURE IT IS NOT WASHED INTO SURFACE STREAMS, SENSITIVE FEATURES, ETC.

7. SEDIMENT MUST BE REMOVED FROM THE SEDIMENT TRAPS OR SEDIMENTATION BASINS NOT LATER THAN WHEN IT OCCUPIES 50% OF THE BASIN'S DESIGN CAPACITY.

8. LITTER, CONSTRUCTION DEBRIS, AND CONSTRUCTION CHEMICALS EXPOSED TO STORMWATER SHALL BE PREVENTED FROM BEING DISCHARGED OFFSITE.

9. ALL SPOILS (EXCAVATED MATERIAL) GENERATED FROM THE PROJECT SITE MUST BE STORED ON-SITE WITH PROPER E&S CONTROLS. FOR STORAGE OR DISPOSAL OF SPOILS AT ANOTHER SITE ON THE EDWARDS AQUIFER RECHARGE ZONE, THE OWNER OF THE SITE MUST RECEIVE APPROVAL OF A WATER POLLUTION ABATEMENT PLAN FOR THE PLACEMENT OF FILL MATERIAL OR MASS GRADING PRIOR TO THE PLACEMENT OF SPOILS AT THE OTHER SITE.

10. IF PORTIONS OF THE SITE WILL HAVE A TEMPORARY OR PERMANENT CEASE IN CONSTRUCTION ACTIVITY LASTING LONGER THAN 14 DAYS, SOIL STABILIZATION IN THOSE AREAS SHALL BE INITIATED AS SOON AS POSSIBLE PRIOR TO THE 14TH DAY OF INACTIVITY. IF ACTIVITY WILL RESUME PRIOR TO THE 21ST DAY, STABILIZATION MEASURES ARE NOT REQUIRED. IF DROUGHT CONDITIONS OR INCLEMENT WEATHER PREVENT ACTION BY THE 14TH DAY, STABILIZATION MEASURES SHALL BE INITIATED AS SOON AS POSSIBLE.

11. THE FOLLOWING RECORDS SHALL BE MAINTAINED AND MADE AVAILABLE TO THE TCEQ UPON REQUEST:
    - THE DATES WHEN MAJOR GRADING ACTIVITIES OCCUR;
    - THE DATES WHEN CONSTRUCTION ACTIVITIES TEMPORARILY OR PERMANENTLY CEASE ON A PORTION OF THE SITE; AND
    - THE DATES WHEN STABILIZATION MEASURES ARE INITIATED.

12. THE HOLDER OF ANY APPROVED EDWARD AQUIFER PROTECTION PLAN MUST NOTIFY THE APPROPRIATE REGIONAL OFFICE IN WRITING AND OBTAIN APPROVAL FROM THE EXECUTIVE DIRECTOR PRIOR TO INITIATING ANY OF THE FOLLOWING:

A. ANY PHYSICAL OR OPERATIONAL MODIFICATION OF ANY WATER POLLUTION ABATEMENT STRUCTURE(S), INCLUDING BUT NOT LIMITED TO PONDS, DAMS, BERMS, SEWAGE TREATMENT PLANTS, AND DIVERSIONARY STRUCTURES;

B. ANY CHANGE IN THE NATURE OR CHARACTER OF THE REGULATED ACTIVITY FROM THAT WHICH WAS ORIGINALLY APPROVED OR A CHANGE WHICH WOULD SIGNIFICANTLY IMPACT THE ABILITY OF THE PLAN TO PREVENT POLLUTION OF THE EDWARDS AQUIFER;

C. ANY DEVELOPMENT OF LAND PREVIOUSLY IDENTIFIED AS UNDEVELOPED IN THE ORIGINAL WATER POLLUTION ABATEMENT PLAN.

AUSTIN REGIONAL OFFICE
12100 PARK 35 CIRCLE, BUILDING A
AUSTIN, TEXAS 78753-1808
PHONE (512) 339-2929
FAX (512) 339-3795
SAN ANTONIO REGIONAL OFFICE
14250 JUDSON ROAD
SAN ANTONIO, TEXAS 78233-4480
PHONE (210) 490-3096
FAX (210) 545-4329

THESE GENERAL CONSTRUCTION NOTES MUST BE INCLUDED ON THE CONSTRUCTION PLANS PROVIDED TO THE CONTRACTOR AND ALL SUBCONTRACTORS.

TCEQ-0592 (REV. 10/21/15)

STATE OF TEXAS
GERALD S. FURRIER
129811
LICENSED
PROFESSIONAL ENGINEER
04/30/2024

REV. NO.	DATE	DRWN	CHKD	REMARKS

DESIGNED BY:	A. KAJALE
DRAWN BY:	S. MANISANKAR
SHEET CHK'D BY:	ASHWIN G
CROSS CHK'D BY:	A. RHAMES
APPROVED BY:	G. FURRIER
DATE:	APRIL 2024

CDM Smith
8310-1 N Capital of Texas Hwy, Suite 250
Austin, TX 78731
Tel: (512) 346-1100
TBPELS Firm Registration No. F-3043

CITY OF GEORGETOWN, TEXAS

SOUTH LAKE TO SOUTH FORK WASTEWATER IMPROVEMENTS

STANDARD TCEQ GENERAL CONSTRUCTION NOTES II

PROJECT NO. 2048-272644
FILE NAME: G007NFMN.dwg
SHEET NO. G-7

Plotted: 5/3/2024 12:27:56 PM

XREFs: [CDMS_2234_South_lake_to_South_fork_Border_PP_REVW_STAMP] Images: []
Last saved by: SAMIDURAIM Time: 03-05-2024 11:43:39
pw:\\cdmsmith-az02-pw.bentley.com:pw_p11\2048\272644\04 Design Services NM_50%\01 General\10 BIM_CADD\G007NFMN.dwg
© 2022 CDM SMITH ALL RIGHTS RESERVED.
REUSE OF DOCUMENTS: THESE DOCUMENTS AND DESIGNS PROVIDED BY PROFESSIONAL SERVICE, INCORPORATED HEREIN, ARE THE PROPERTY OF CDM SMITH AND ARE NOT TO BE USED, IN WHOLE OR PART, FOR ANY OTHER PROJECT WITHOUT THE WRITTEN AUTHORIZATION OF CDM SMITH.

GENERAL NOTES FOR BURIED PIPING:

1. FIELD VERIFY LOCATION, DEPTH, JOINT LOCATIONS AND TYPE, PIPE MATERIAL AND SIZE OF ALL KNOWN PIPES TO BE CONNECTED TO, CROSSED, ETC., PRIOR TO ORDERING MATERIAL BEFORE CONSTRUCTION STARTS.
2. PIPING THRUST RESTRAINT SHALL BE ACCOMPLISHED USING RESTRAINED JOINTS, RESTRAINED FITTINGS AND VALVES. RESTRAINED JOINT SCHEDULE AND RESTRAINED PIPE SECTIONS TABLES SHOWN ON THIS SHEET.
3. CONCRETE THRUST BLOCKS MAY BE USED ONLY FOR SPECIAL CONDITIONS WHEN APPROVED OR DIRECTED BY THE ENGINEER. REFER TO DETAILS AND NOTES SHOWN ON SHEET CZ-4.
4. CONTRACTOR SHALL DESIGN, FURNISH, INSTALL, AND MAINTAIN EXCAVATION SAFETY SYSTEMS AS SPECIFIED IN SECTION CIP11.
5. ALL BURIED FITTINGS (VALVES, BENDS, TEES, HYDRANTS, ETC.) ON PRESSURIZED SYSTEMS SHALL HAVE FACTORY RESTRAINTS, RESTRAINED MECHANICAL JOINT OR RESTRAINED PUSH-ON CONNECTIONS.
6. ALL PIPELINE STATIONING IS AT PIPELINE CENTER LINE.
7. MINIMUM DISTANCE FROM CENTERLINE OF TAP TO NEAREST JOINT SHALL BE PER PIPE MANUFACTURER'S RECOMMENDATIONS. ADJUST TAP LOCATION AS NECESSARY TO COMPLY. PROVIDE ALL FITTINGS, ETC., TO ADJUST NEW PIPE ALIGNMENT.
8. WHEN MAKING CONNECTIONS TO NEW OR EXISTING PIPING, CONTRACTOR SHALL PROVIDE ALL FITTINGS, ADAPTERS, CONNECTING PIECES, SLEEVES, FLEXIBLE COUPLINGS, ETC, REQUIRED TO MAKE THE CONNECTIONS IN A MANNER SATISFACTORY TO THE ENGINEER REGARDLESS OF WHETHER OR NOT THESE COMPONENTS ARE SHOWN ON THE DRAWINGS.
9. THE BORING LOGS ARE INCLUDED IN SPECIFICATION SECTION CIP4.A FOR THE CONTRACTOR'S USE. GEOTECHNICAL REPORTS ARE AVAILABLE UPON REQUEST FROM THE OWNER AND THE ENGINEER FOR THE CONTRACTOR'S USE.
10. UTILITIES AND PIPES TO BE DISTURBED BY NEW WORK SHALL BE PROTECTED.
11. ALL CONNECTIONS BETWEEN NEW AND/OR EXISTING PIPING, VALVES, FITTINGS, ETC, WHERE DISSIMILAR METALS WILL BE IN CONTACT SHALL BE PROTECTED BY INSULATING SYSTEMS AS APPROVED BY THE ENGINEER.
12. MAXIMUM ALLOWABLE PIPE JOINT DEFLECTION SHALL BE LIMITED TO 80% OF MANUFACTURER'S PUBLISHED ALLOWABLE DEFLECTION. DEFLECTIONS OF MORE THAN 80% MANUFACTURER'S PUBLISHED ACCEPTABLE DEFLECTION SHALL BE MADE WITH MANUFACTURER'S STANDARD FITTINGS PER ENGINEER'S APPROVAL.
13. INSTALL PIPELINE TO DEPTHS SHOWN ON DRAWINGS. NO DIPS, SAGS, HUMPS, OR OTHER IRREGULARITIES IN VERTICAL ALIGNMENT ARE ACCEPTABLE. THE PROFILES SHOWN ARE THE INTENDED PROFILES CONSIDERING TOPOGRAPHY, EXISTING KNOWN UTILITIES, AND OTHER KNOWN CONDITIONS. VARIANCES FROM PROFILES MAY BE NECESSARY IF OTHER UTILITIES OR OBSTRUCTIONS ARE ENCOUNTERED DURING WORK. THE CONTRACTOR SHALL VERIFY THE LOCATION AND DEPTH OF ALL KNOWN EXISTING UTILITIES PRIOR TO ORDERING MATERIALS AND INSTALLING THE PIPELINE SO THAT CONFLICTS CAN BE AVOIDED AND ACCEPTABLE PROFILES CAN BE ESTABLISHED PRIOR TO INSTALLATION OF THE PIPELINE. IF, FOR ANY REASON, THE PROFILE ELEVATIONS SHOWN OR THE NATURAL GROUND ELEVATIONS AT THE PIPE CENTERLINE WOULD RESULT IN LESS COVER THAN IS SHOWN, THE OWNER/ENGINEER RESERVES THE RIGHT TO MAKE REASONABLE ADJUSTMENTS IN THE PIPE PROFILES TO PROVIDE AN ACCEPTABLE COVER. NO PRICE ADJUSTMENTS WILL BE MADE FOR THESE SITUATIONS.
14. IN SITUATIONS WHERE THE PLANS INDICATE POSSIBLE SPACE CONFLICTS BETWEEN NEW BURIED PIPING AND EXISTING UTILITY PIPING, ELECTRICAL CONDUITS, ETC., INCLUDING LOCATIONS WHERE THE EXISTING PIPING WILL BE WITHIN THE LIMITS OF TRENCHING FOR THE NEW PIPE, THE CONTRACTOR SHALL DO THE FOLLOWING:
    - FIELD LOCATE EXISTING PIPING AND DETERMINE THE ACTUAL EXTENT AND NATURE OF CONFLICT, IF ANY.
    - IF CONTRACTOR CAN "WORK AROUND" THE EXISTING PIPING, IN THE ENGINEER'S OPINION, THE EXISTING PIPING SHALL BE SUPPORTED AND PROTECTED AND KEPT IN SERVICE.
    - IF THERE IS AN UNWORKABLE CONFLICT, IN THE ENGINEER'S OPINION, THE CONTRACTOR SHALL PROPOSE A SOLUTION ACCEPTABLE TO THE ENGINEER AND ADJUST OR REROUTE THE NEW OR EXISTING PIPE AS NECESSARY TO ELIMINATE THE CONFLICT.
    - THIS WORK WILL BE CONSIDERED TO BE PART OF THE BASIC CONTRACT WORK AND NO ADDITIONAL PAYMENT WILL BE MADE FOR ADJUSTMENTS/REROUTES FOR EXISTING PIPING SHOWN ON THE PLANS.
    - IN SITUATIONS SIMILAR TO THE ABOVE, BUT WHERE THE DRAWINGS DO NOT INDICATE A CONFLICT, SUCH AS IN THE CASE OF AN EXISTING LINE NOT SHOWN ON THE DRAWINGS, THE CONTRACTOR SHALL FOLLOW THE SAME PROCEDURE AS ABOVE. UNDER THIS SITUATION, PAYMENT WILL BE MADE TO THE CONTRACTOR IN ACCORDANCE WITH THE CONTRACT DOCUMENTS.
15. CONTRACTOR SHALL INSTALL TRACER WIRE FOR ALL PIPELINES IN ACCORDANCE WITH THE CITY STANDARD DESIGN DETAILS.
16. ALL COMBINATION AIR VALVES SHALL BE SLOW-CLOSING, NON-SLAM TYPE (CAV2).

THRUST RESTRAINT NOTES:

1. THE DISTANCES SHOWN BELOW INDICATE THE MINIMUM REQUIRED RESTRAINED LENGTHS FOR THE FINISHED INSTALLATION. ADDITIONAL RESTRAINTS ARE REQUIRED IF TEMPORARY PLUGS OR OTHER FITTINGS ARE USED FOR PIPELINE TESTING. NO SEPARATE PAY.
2. SEGMENTS OF PIPE IN VAULTS OR IN CASING PIPE DO NOT COUNT TOWARD THE REQUIRED RESTRAINED LENGTH.
3. ALL FITTINGS, VALVES, AND OTHER APPURTENANCES SUBJECT TO A WORKING PRESSURE SHALL BE RESTRAINED.
4. VALVE LOCATIONS SHALL BE RESTRAINED IN BOTH DIRECTIONS A MINIMUM DISTANCE EQUAL TO A DEAD END.
5. THE PRIMARY LENGTHS SHOWN BELOW ARE BASED ON FOUR FEET (MIN.) OF COVER AND A FACTOR OF SAFETY OF 1.5 AT A TEST PRESSURE OF 200 PSI. SHALLOWER DEPTHS SHALL REQUIRE LONGER RESTRAINED LENGTHS.
6. FOR ANY GIVEN PIPE MATERIAL, THE CONTRACTOR MAY PROPOSE ALTERNATE RESTRAINED LENGTHS FOR THE ENGINEER'S CONSIDERATION BY FILING A WRITTEN REQUEST PREPARED BY THE PIPE MANUFACTURER AND SUPPORTED BY DETAILED CALCULATIONS PREPARED AND SEALED BY A PROFESSIONAL ENGINEER LICENSED IN THE STATE OF TEXAS. ALL SUCH CALCULATIONS SHALL BE BASED ON A TEST PRESSURE OF 200 PSI AT A FACTOR OF SAFETY OF 1.5 AND DEPTH OF BURY SHOWN ON PLANS.
7. RESTRAINT LENGTH SHOWN ARE MINIMUM. IF CONTRACTOR IS USING FULL JOINT PIPE, THE ENTIRE JOINT SHALL BE RESTRAINED.

18" FM RESTRAINED PIPE SECTION		
PVC		
STARTING STATION	ENDING STATION	RESTRAINED PIPE LENGTH (FT)
94+96	97+40	244
114+96	117+40	244
118+94	119+54	46
121+81	122+20	39
126+03	126+19	16
128+35	128+43	8
134+96	137+40	244
138+84	141+32	248
143+98	144+14	16
144+64	144+97	33
145+48	148+15	261

12" FM RESTRAINED PIPE SECTION		
PVC		
STARTING STATION	ENDING STATION	RESTRAINED PIPE LENGTH (FT)
181+06	181+34	28
185+66	185+90	24
187+34	187+58	24
187+78	188+02	24
188+95	189+19	24
189+39	189+63	24
189+76	189+96	20
190+29	190+41	12
191+00	191+12	12

1

STATE OF TEXAS
GERALD S. FURRIER
129811
LICENSED
PROFESSIONAL ENGINEER
04/30/2024

REV. NO.	DATE	DRWN	CHKD	REMARKS
1	5/29/24	AK	GF	ADDENDUM 2

DESIGNED BY: A. KAJALE
DRAWN BY: S MANISANKAR
SHEET CHK'D BY: ASHWIN G
CROSS CHK'D BY: A. RHAMES
APPROVED BY: G. FURRIER
DATE: APRIL 2024

CDM Smith
8310-1 N Capital of Texas Hwy, Suite 250
Austin, TX 78731
Tel: (512) 346-1100
TBPELS Firm Registration No. F-3043

CITY OF GEORGETOWN, TEXAS
SOUTH LAKE TO SOUTH FORK WASTEWATER IMPROVEMENTS

BURIED PIPING NOTES AND SCHEDULES

PROJECT NO. 2048-272644
FILE NAME: G008NFGN.dwg
SHEET NO.
G-8

Plotted: 6/14/2024 3:11:24 PM

XREFs: [CDMS_2234_South_lake_to_South_fork_Border_PP] Images: []
Last saved by: KAJALEAN Time: 5/29/2024 5:41:02 PM
pw:\\cdmsmith-az02-pw.bentley.com:pw_pw11204812\272644\04 Design Services NM_50%\01 General\10 BIM_CADD\G008YPNT.dwg
© 2022 CDM SMITH ALL RIGHTS RESERVED.
REUSE OF DOCUMENTS: THESE DOCUMENTS AND DESIGNS PROVIDED BY PROFESSIONAL SERVICE, INCORPORATED HEREIN, ARE THE PROPERTY OF CDM SMITH AND ARE NOT TO BE USED, IN WHOLE OR PART, FOR ANY OTHER PROJECT WITHOUT THE WRITTEN AUTHORIZATION OF CDM SMITH.

NOTES:

1. CONTRACTOR SHALL COORDINATE WITH CITY OF GEORGETOWN ARBORIST PRIOR TO ANY TREE REMOVAL ON THIS PROJECT.
2. ALL THE TREES THAT NEED TO BE REMOVED WILL NEED TO BE MARKED PRIOR TO SCHEDULING A MEETING WITH CITY OF GEORGETOWN ARBORIST.

Cedar Breaks and D B Wood LS
Tree List

Tree	Tree Size	Tree Diameter (inches)	Tree Type	Sheet Number	Action
221175	SYC-21	21	Sycamore	C-1	Remove
221167	SYC-18	18	Sycamore	C-1	Protect
221168	SYC-12	12	Sycamore	C-1	Protect
221169	SYC-16	16	Sycamore	C-1	Protect
221170	SYC-20	20	Sycamore	C-1	Protect
221171	SYC-17-12	23	Sycamore	C-1	Protect
221172	SYC-21	21	Sycamore	C-1	Protect
221173	SYC-21	21	Sycamore	C-1	Protect
221174	SYC-18	18	Sycamore	C-1	Protect
221174	CE-20	20	Cedar Elm	C-1	Protect
221176	SYC-21	21	Sycamore	C-1	Protect
221177	CB-18	18	Chinaberry	C-1	Protect
920021	PEC-20	20	Pecan	C-3	Protect
350022	LO-18	18	Live Oak	C-3	Protect
350023	LO-18	18	Live Oak	C-4	Remove
350024	LO-13-13	19.5	Live Oak	C-4	Remove
350025	LO-12-12-12-10-5	31.5	Live Oak	C-4	Protect
350026	LO-22-13-11	34	Live Oak	C-4	Protect
350027	LO-20-13	26.5	Live Oak	C-4	Protect
350028	LO-17-11-11	28	Live Oak	C-4	Protect
350021	LO-16-16-10	29	Live Oak	C-5	Protect
350006	LO-13	13	Live Oak	C-5	Protect
350005	LO-14-12	24	Live Oak	C-5	Remove
350004	LO-12-11-9	22	Live Oak	C-5	Protect
350003	LO-18	18	Live Oak	C-5	Protect
350002	LO-24-12	30	Live Oak	C-5	Protect
350001	LO-14	14	Live Oak	C-5	Protect
10013	LO-24	24	Live Oak	C-6	Protect
10001	LO-34	34	Live Oak	C-7	Remove
10012	LO-24	24	Live Oak	C-7	Remove
10011	LO-20	20	Live Oak	C-7	Protect
10005	LO-30	30	Live Oak	C-8	Remove
10004	LO-21	21	Live Oak	C-8	Remove
10003	LO-28	28	Live Oak	C-8	Remove
10006	LO-21	21	Live Oak	C-9	Protect
10007	LO-24	24	Live Oak	C-9	Protect
10008	LO-32	32	Live Oak	C-9	Protect
220271	LO-16	16	Live Oak	C-11	Remove
220262	LO-18	18	Live Oak	C-11	Remove
220263	LO-17	17	Live Oak	C-11	Protect
220264	LO-18	18	Live Oak	C-11	Protect

Cedar Breaks and D B Wood LS
Tree List

Tree	Tree Size	Tree Diameter (inches)	Tree Type	Sheet Number	Action
220265	LO-19	19	Live Oak	C-11	Protect
220266	LO-12-11	17.5	Live Oak	C-11	Protect
220267	LO-13	13	Live Oak	C-11	Protect
220268	LO-15	15	Live Oak	C-11	Protect
220269	LO-15	15	Live Oak	C-11	Protect
115056	LO-24	24	Live Oak	C-12	Remove
220654	LO-15	15	Live Oak	C-12	Remove
220304	LO-22-15-12	35.5	Live Oak	C-12	Remove
220305	LO-16	16	Live Oak	C-12	Remove
220307	LO-13-12-11-11	30	Live Oak	C-12	Remove
220295	LO-13	13	Live Oak	C-12	Remove
220296	LO-17	17	Live Oak	C-12	Remove
220297	LO-16-14	23	Live Oak	C-12	Remove
220298	LO-17-15-15	32	Live Oak	C-12	Remove
220319	LO-13	13	Live Oak	C-12	Remove
220320	LO-12	12	Live Oak	C-12	Remove
220318	LO-13-11	19.5	Live Oak	C-12	Remove
220321	LO-13	13	Live Oak	C-12	Protect
220322	LO-16-13	22.5	Live Oak	C-12	Protect
220323	LO-18	18	Live Oak	C-12	Protect
220308	LO-12	12	Live Oak	C-12	Protect
220294	LO-22	22	Live Oak	C-12	Protect
220293	LO-16	16	Live Oak	C-12	Protect
220292	LO-18	18	Live Oak	C-12	Protect
220291	LO-20	20	Live Oak	C-12	Protect
220371	LO-19	19	Live Oak	C-12	Protect
220351	LO-22	22	Live Oak	C-12	Protect
220352	LO-21	21	Live Oak	C-12	Protect
220353	LO-23	23	Live Oak	C-12	Protect
220354	LO-20	20	Live Oak	C-12	Protect
115053	LO-14	14	Live Oak	C-12	Protect
115054	LO-17-16-16	33	Live Oak	C-12	Protect
115055	LO-21	21	Live Oak	C-12	Protect
220281	LO-20	20	Live Oak	C-12	Protect
220282	LO-16-10	21	Live Oak	C-12	Protect
220283	LO-15	15	Live Oak	C-12	Protect
220284	LO-15	15	Live Oak	C-12	Protect
220285	LO-17	17	Live Oak	C-12	Protect
220286	LO-14	14	Live Oak	C-12	Protect
220627	LO-12	12	Live Oak	C-13	Remove
220614	LO-12	12	Live Oak	C-13	Remove

Cedar Breaks and D B Wood LS
Tree List

Tree	Tree Size	Tree Diameter (inches)	Tree Type	Sheet Number	Action
220610	LO-18	18	Live Oak	C-13	Remove
220599	LO-25	25	Live Oak	C-13	Remove
220600	LO-22	22	Live Oak	C-13	Remove
220601	LO-17	17	Live Oak	C-13	Remove
220564	LO-13-7	16.5	Live Oak	C-13	Remove
220566	LO-12	12	Live Oak	C-13	Remove
220565	LO-13	13	Live Oak	C-13	Remove
220567	LO-15	15	Live Oak	C-13	Remove
220569	LO-12	12	Live Oak	C-13	Remove
220568	LO-12	12	Live Oak	C-13	Remove
220570	LO-13	13	Live Oak	C-13	Remove
220571	LO-14	14	Live Oak	C-13	Remove
220572	LO-17	17	Live Oak	C-13	Remove
220573	LO-14-14	21	Live Oak	C-13	Remove
220587	LO-16	16	Live Oak	C-13	Protect
220588	LO-16	16	Live Oak	C-13	Protect
220589	LO-12	12	Live Oak	C-13	Protect
220590	LO-16	16	Live Oak	C-13	Protect
220591	LO-14	14	Live Oak	C-13	Protect
220592	LO-14	14	Live Oak	C-13	Protect
220593	LO-17	17	Live Oak	C-13	Protect
220561	LO-15	15	Live Oak	C-13	Protect
220562	LO-16	16	Live Oak	C-13	Protect
220563	LO-17	17	Live Oak	C-13	Protect
220560	LO-14	14	Live Oak	C-13	Protect
220559	LO-13	13	Live Oak	C-13	Protect
220558	LO-13	13	Live Oak	C-13	Protect
220557	LO-19	19	Live Oak	C-13	Protect
220556	LO-14	14	Live Oak	C-13	Protect
220555	LO-14	14	Live Oak	C-13	Protect
220602	LO-16	16	Live Oak	C-13	Protect
220603	LO-19	19	Live Oak	C-13	Protect
220604	LO-16	16	Live Oak	C-13	Protect
220554	LO-24	24	Live Oak	C-13	Protect
220605	LO-13	13	Live Oak	C-13	Protect
220607	LO-12	12	Live Oak	C-13	Protect
220608	LO-12	12	Live Oak	C-13	Protect
220609	LO-16	16	Live Oak	C-13	Protect
220620	LO-12	12	Live Oak	C-13	Protect
220619	LO-12	12	Live Oak	C-13	Protect
220621	LO-15	15	Live Oak	C-13	Protect

Cedar Breaks and D B Wood LS
Tree List

Tree	Tree Size	Tree Diameter (inches)	Tree Type	Sheet Number	Action
220622	LO-13	13	Live Oak	C-13	Protect
220623	LO-14	14	Live Oak	C-13	Protect
220624	LO-12	12	Live Oak	C-13	Protect
220625	LO-17	17	Live Oak	C-13	Protect
220630	LO-24-22	35	Live Oak	C-13	Protect
120069	LO-19	19	Live Oak	C-14	Remove
120070	LO-20	20	Live Oak	C-14	Remove
120068	LO-18	18	Live Oak	C-14	Remove
220646	LO-19	19	Live Oak	C-14	Remove
220647	LO-19	19	Live Oak	C-14	Protect
220633	LO-17-14	24	Live Oak	C-14	Remove
220635	LO-17	17	Live Oak	C-14	Protect
220644	LO-12	12	Live Oak	C-14	Protect
120058	LO-14	14	Live Oak	C-14	Protect
120059	LO-13-11	18.5	Live Oak	C-14	Protect
120060	LO-13	13	Live Oak	C-14	Protect
120062	LO-13	13	Live Oak	C-14	Protect
120063	LO-14	14	Live Oak	C-14	Protect
120064	LO-16	16	Live Oak	C-14	Protect
120065	LO-13	13	Live Oak	C-14	Protect
120066	LO-14	14	Live Oak	C-14	Protect
410489	CE-12	12	Cedar Elm	C-15	Remove
410495	LO-15	15	Live Oak	C-15	Remove
410496	LO-17	17	Live Oak	C-15	Remove
410498	LO-24	24	Live Oak	C-15	Protect
410497	LO-19	19	Live Oak	C-15	Remove
310590	LO-13	13	Live Oak	C-15	Protect
310591	LO-15	15	Live Oak	C-15	Protect
310588	LO-20	20	Live Oak	C-15	Remove
310295	LO-31-18	40	Live Oak	C-16	Remove
310277	PEC-21	21	Pecan	C-17	Remove
310278	PEC-19	19	Pecan	C-17	Remove
310276	PEC-21	21	Pecan	C-17	Remove
310275	PEC-22	22	Pecan	C-17	Protect
310282	PEC-19	19	Pecan	C-18	Remove
310269	SYC-23-12	29	Sycamore	C-18	Remove
310286	PEC-20-15	27.5	Pecan	C-18	Remove
310287	CE-12-11	17.5	Cedar Elm	C-18	Remove
310288	LO-20-5	22.5	Live Oak	C-18	Remove
310266	CE-19	19	Cedar Elm	C-18	Protect
310265	LO-20	20	Live Oak	C-18	Remove

Cedar Breaks and D B Wood LS
Tree List

Tree	Tree Size	Tree Diameter (inches)	Tree Type	Sheet Number	Action
410715	CE-12	12	Cedar Elm	C-18	Protect
410718	CE-16	16	Cedar Elm	C-18	Remove
410723	CE-12	12	Cedar Elm	C-18	Remove
410724	CE-15	15	Cedar Elm	C-18	Protect
410725	CE-12	12	Cedar Elm	C-19	Remove
410726	CE-13-10	18	Cedar Elm	C-19	Remove
410727	CE-12	12	Cedar Elm	C-19	Remove
410689	CE-13-10	13	Cedar Elm	C-19	Remove
310249	RO-19	19	Red Oak	C-20	Remove
115036	CE-14	14	Cedar Elm	C-21	Protect
115034	LO-13-11-9-6-4	28	Live Oak	C-21	Protect
221154	LO-27	27	Live Oak	C-23	Remove
220215	LO-18	18	Live Oak	C-24	Remove
220216	LO-17-11	22.5	Live Oak	C-24	Protect
220221	LO-18	18	Live Oak	C-24	Remove
220222	LO-15	15	Live Oak	C-24	Remove
330136	LO-11-9	15.5	Live Oak	C-24	Remove
330137	CE-13	13	Cedar Elm	C-24	Remove
310140	LO-12	12	Live Oak	C-24	Remove
220167	LO-12	12	Live Oak	C-25	Protect
220171	LO-13	13	Live Oak	C-25	Remove
220172	LO-23	23	Live Oak	C-25	Remove
220183	LO-13	13	Live Oak	C-25	Remove
220181	LO-12	12	Live Oak	C-25	Remove
220199	LO-13	13	Live Oak	C-25	Remove
220200	LO-13	13	Live Oak	C-25	Remove
220201	LO-12	12	Live Oak	C-25	Remove
220202	LO-15	15	Live Oak	C-25	Remove
220203	LO-18	18	Live Oak	C-25	Protect
220084	LO-17	17	Live Oak	C-26	Remove
220085	LO-15	15	Live Oak	C-26	Remove
220086	LO-13	13	Live Oak	C-26	Remove
220087	LO-13	13	Live Oak	C-26	Remove
220093	LO-12	12	Live Oak	C-26	Remove
220122	LO-26 -14	33	Live Oak	C-26	Remove
220141	LO-14	14	Live Oak	C-26	Protect
220142	LO-14	14	Live Oak	C-26	Protect
220143	LO-15	15	Live Oak	C-26	Protect
220104	SO-15	15	Shumard Oak	C-26	Protect
220105	SO-14-16	17	Shumard Oak	C-26	Protect
220106	LO-12-10-5	19.5	Live Oak	C-26	Protect

Cedar Breaks and D B Wood LS
Tree List

Tree	Tree Size	Tree Diameter (inches)	Tree Type	Sheet Number	Action
220107	CE-12	12	Cedar Elm	C-26	Protect
220108	LO-18.5	18.5	Live Oak	C-26	Protect
220109	CE-12	12	Cedar Elm	C-26	Protect
220110	LO-13	13	Live Oak	C-26	Protect
220092	LO-21-12	27	Live Oak	C-26	Protect
220094	LO-26	26	Live Oak	C-26	Protect
220095	LO-15-13-13	28	Live Oak	C-26	Protect
220096	LO-16	16	Live Oak	C-26	Protect
220077	CE-14	14	Cedar Elm	C-27	Remove
220078	SO-19-17-11	33	Shumard Oak	C-27	Remove
220088	LO-19-17-16 -15-11	48.5	Live Oak	C-27	Remove
220046	SO-25 -21	35.5	Shumard Oak	C-28	Remove
220049	LO-13	13	Live Oak	C-28	Remove
220050	LO-20-12-10	31	Live Oak	C-28	Remove
220051	LO-20-19	29.5	Live Oak	C-28	Remove
220052	LO-16	16	Live Oak	C-28	Remove
220053	LO-24	24	Live Oak	C-28	Remove
220054	LO-27	27	Live Oak	C-28	Remove
220055	LO-22	22	Live Oak	C-28	Remove
220015	LO-27	27	Live Oak	C-29	Remove
220017	LO-26	26	Live Oak	C-29	Remove
220021	PO-20	20	Post Oak	C-29	Remove
220028	PO-24-14	31	Post Oak	C-29	Remove
220030	LO-20	20	Live Oak	C-29	Remove
220031	LO-19	19	Live Oak	C-29	Remove
220033	LO-25	25	Live Oak	C-29	Protect
220037	LO-11-11-10	21.5	Live Oak	C-29	Remove
220039	LO-20-18-6	32	Live Oak	C-29	Remove
220036	LO-15	15	Live Oak	C-29	Protect
220040	LO-21-22	32.5	Live Oak	C-29	Protect
220041	LO-12	12	Live Oak	C-29	Protect
310114	CE-13-11	18.5	Cedar Elm	C-29	Protect
310100	CE-14	14	Cedar Elm	C-29	Protect
220029	CE-14	14	Cedar Elm	C-29	Protect
220026	CE-14	14	Cedar Elm	C-29	Protect
220027	CE-13	13	Cedar Elm	C-29	Protect
220022	LO-16	16	Live Oak	C-29	Protect
220023	LO-17	17	Live Oak	C-29	Protect
220024	LO-26	26	Live Oak	C-29	Protect
220025	LO-16-9	20.5	Live Oak	C-29	Protect
220016	LO-16	16	Live Oak	C-29	Protect

Cedar Breaks and D B Wood LS
Tree List

Tree	Tree Size	Tree Diameter (inches)	Tree Type	Sheet Number	Action
220017	LO-26	26	Live Oak	C-29	Protect
220018	LO-17	17	Live Oak	C-29	Protect
220019	LO-15-13	21.5	Live Oak	C-29	Protect
220020	LO-18	18	Live Oak	C-29	Protect
310108	LO-31	31	Live Oak	C-29	Protect
210352	LO-21	21	Live Oak	C-30	Remove
210353	LO-25	25	Live Oak	C-30	Remove
210362	LO-12	12	Live Oak	C-30	Remove
210363	LO-12-11	17.5	Live Oak	C-30	Remove
210370	LO-12	12	Live Oak	C-30	Protect
210374	LO-15	15	Live Oak	C-30	Remove
210371	LO-15	15	Live Oak	C-30	Remove
210373	LO-15	15	Live Oak	C-30	Remove
220003	LO-13-9	17.5	Live Oak	C-30	Protect
220004	LO-15	15	Live Oak	C-30	Remove
220010	LO-18	18	Live Oak	C-30	Remove
220011	LO-18-17	26.5	Live Oak	C-30	Remove
220012	LO-24	24	Live Oak	C-30	Remove
220013	LO-17-15-13	24.5	Live Oak	C-30	Remove
220006	LO-15	15	Live Oak	C-30	Protect
220007	LO-16	16	Live Oak	C-30	Protect
220005	LO-12	12	Live Oak	C-30	Protect
210368	LO-20	20	Live Oak	C-30	Protect
210369	LO-13	13	Live Oak	C-30	Protect
210370	LO-12	12	Live Oak	C-30	Protect
210364	LO-13-12	19	Live Oak	C-30	Protect
210365	LO-12-11	17.5	Live Oak	C-30	Protect
210366	LO-16	16	Live Oak	C-30	Protect
210367	LO-16	16	Live Oak	C-30	Protect
210295	LO-12	12	Live Oak	C-31	Remove
210296	LO-13	13	Live Oak	C-31	Remove
210297	LO-17-19	25	Live Oak	C-31	Remove
210298	LO-14	14	Live Oak	C-31	Remove
210310	LO-15	15	Live Oak	C-31	Protect
210311	LO-18	18	Live Oak	C-31	Remove
210312	LO-20	20	Live Oak	C-31	Remove
210313	CE-13	13	Cedar Elm	C-31	Remove
210324	LO-15	15	Live Oak	C-31	Remove
210325	LO-12	12	Live Oak	C-31	Remove
210345	LO-19	19	Live Oak	C-31	Remove
210338	LO-28	28	Live Oak	C-31	Remove

Cedar Breaks and D B Wood LS
Tree List

Tree	Tree Size	Tree Diameter (inches)	Tree Type	Sheet Number	Action
210348	LO-18	18	Live Oak	C-31	Remove
210347	LO-13	13	Live Oak	C-31	Remove
210351	LO-31	31	Live Oak	C-31	Remove
210350	LO-34	34	Live Oak	C-31	Protect
210349	LO-33-17	41.5	Live Oak	C-31	Protect
210342	LO-16	16	Live Oak	C-31	Protect
210342	LO-13	13	Live Oak	C-31	Protect
210344	LO-13	13	Live Oak	C-31	Protect
210318	LO-20	20	Live Oak	C-31	Protect
210319	LO-14	14	Live Oak	C-31	Protect
210320	LO-14	14	Live Oak	C-31	Protect
210321	LO-12	12	Live Oak	C-31	Protect
210322	LO-13-10	18	Live Oak	C-31	Protect
210323	LO-15	15	Live Oak	C-31	Protect
220745	LO-17	17	Live Oak	C-32	Remove
220746	LO-16-13	16	Live Oak	C-32	Remove
210272	LO-15	15	Live Oak	C-32	Remove
210271	LO-12	12	Live Oak	C-32	Remove
210270	ASH-17	17	Texas Ash	C-32	Remove
210280	LO-13	13	Live Oak	C-32	Remove
210281	LO-14	14	Live Oak	C-32	Remove
210282	LO-12-8	16	Live Oak	C-32	Remove
210283	CE-14	14	Cedar Elm	C-32	Remove
210284	LO-16	16	Live Oak	C-32	Remove
210285	LO-12	12	Live Oak	C-32	Remove
210286	LO-15	15	Live Oak	C-32	Remove
210292	LO-13	13	Live Oak	C-32	Remove
210293	LO-14	14	Live Oak	C-32	Remove
210274	LO-14	14	Live Oak	C-32	Protect
210275	LO-20	20	Live Oak	C-32	Protect
210276	LO-15	15	Live Oak	C-32	Protect
210277	LO-20	20	Live Oak	C-32	Protect
220765	RO-12-10-10	22	Red Oak	C-32	Protect
220766	LO-13	13	Live Oak	C-32	Protect
220767	RO-12-11-9-7	25	Red Oak	C-32	Protect
220768	LO-14-4	16	Live Oak	C-32	Protect
220769	CE-13	13	Cedar Elm	C-32	Protect
220749	LO-16-13	22.5	Live Oak	C-32	Protect
220747	CE-10-9-8-6	26.5	Cedar Elm	C-32	Protect
220743	LO-17	17	Live Oak	C-32	Protect
220744	LO-17	17	Live Oak	C-32	Protect

Cedar Breaks and D B Wood LS
Tree List

Tree	Tree Size	Tree Diameter (inches)	Tree Type	Sheet Number	Action
220745	LO-17	17	Live Oak	C-32	Protect
220746	LO-16	16	Live Oak	C-32	Protect
210263	LO-15	15	Live Oak	C-33	Remove
210261	LO-12	12	Live Oak	C-33	Remove
210260	LO-12	12	Live Oak	C-33	Remove
210264	LO-14	14	Live Oak	C-33	Protect

STATE OF TEXAS
GERALD S. FURRIER
129811
LICENSED
PROFESSIONAL ENGINEER
04/30/2024

REV. NO.	DATE	DRWN	CHKD	REMARKS

DESIGNED BY: A. KAJALE
DRAWN BY: S MANISANKAR
SHEET CHK'D BY: ASHWIN G
CROSS CHK'D BY: A. RHAMES
APPROVED BY: G. FURRIER
DATE: APRIL 2024

CDM Smith
8310-1 N Capital of Texas Hwy, Suite 250
Austin, TX 78731
Tel: (512) 346-1100
TBPELS Firm Registration No. F-3043

CITY OF GEORGETOWN, TEXAS
SOUTH LAKE TO SOUTH FORK
WASTEWATER IMPROVEMENTS

TREE LIST

PROJECT NO. 2048-272644
FILE NAME: G009YPNT.DWG
SHEET NO.
G-9

XREFs: [CDMS_2234_South_lake_to_South_fork_Border_PP] Images: []
Last saved by: LIZZ, Time: 5/3/2024 9:12:19 PM
C:\pw_pw\lizz\d3151940\G009YPNT.dwg
© 2022 CDM SMITH ALL RIGHTS RESERVED.
REUSE OF DOCUMENTS: THESE DOCUMENTS AND DESIGNS PROVIDED BY PROFESSIONAL SERVICE, INCORPORATED HEREIN, ARE THE PROPERTY OF CDM SMITH AND ARE NOT TO BE USED, IN WHOLE OR PART, FOR ANY OTHER PROJECT WITHOUT THE WRITTEN AUTHORIZATION OF CDM SMITH.

Plotted: 5/3/2024 9:12:31 PM

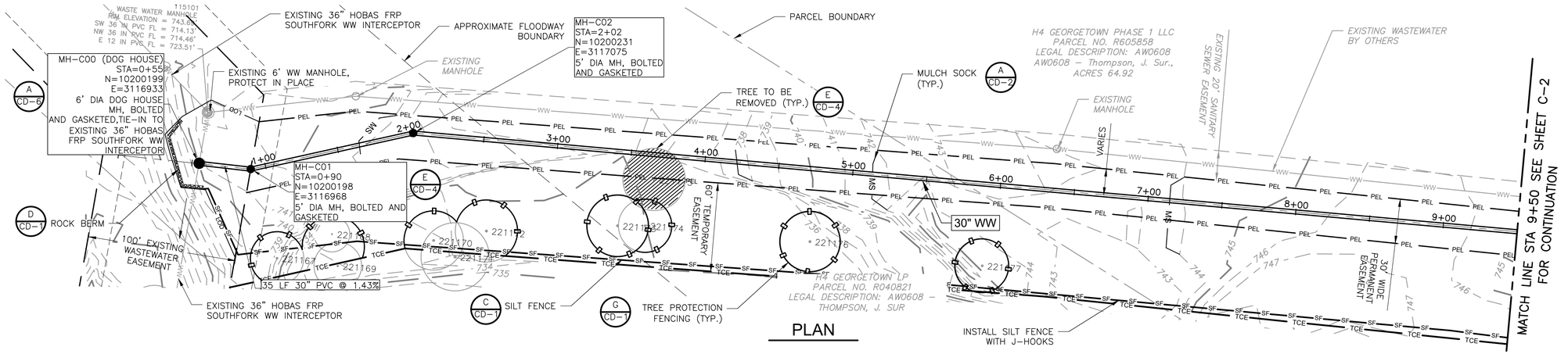

PLAN

NOTES:

1. PRIOR TO CONSTRUCTION OF ANY INTERCEPTOR SEGMENT, THE CONTRACTOR SHALL IDENTIFY THE LOCATION, SIZE, AND ELEVATION OF ALL EXISTING WASTEWATER LINES CROSSING THE PROPOSED ALIGNMENT.
2. GRASSED AREA TO BE SODDED AND WATERED AFTER CONSTRUCTION.
3. CONTRACTOR TO REVEGETATE ALL DISTURBED AREA.
4. CONTRACTOR SHALL INSTALL ROCK BERM AT LOW POINT OF SILT FENCE.
5. SEE SHEET G-9 FOR TREE LIST TABLE.

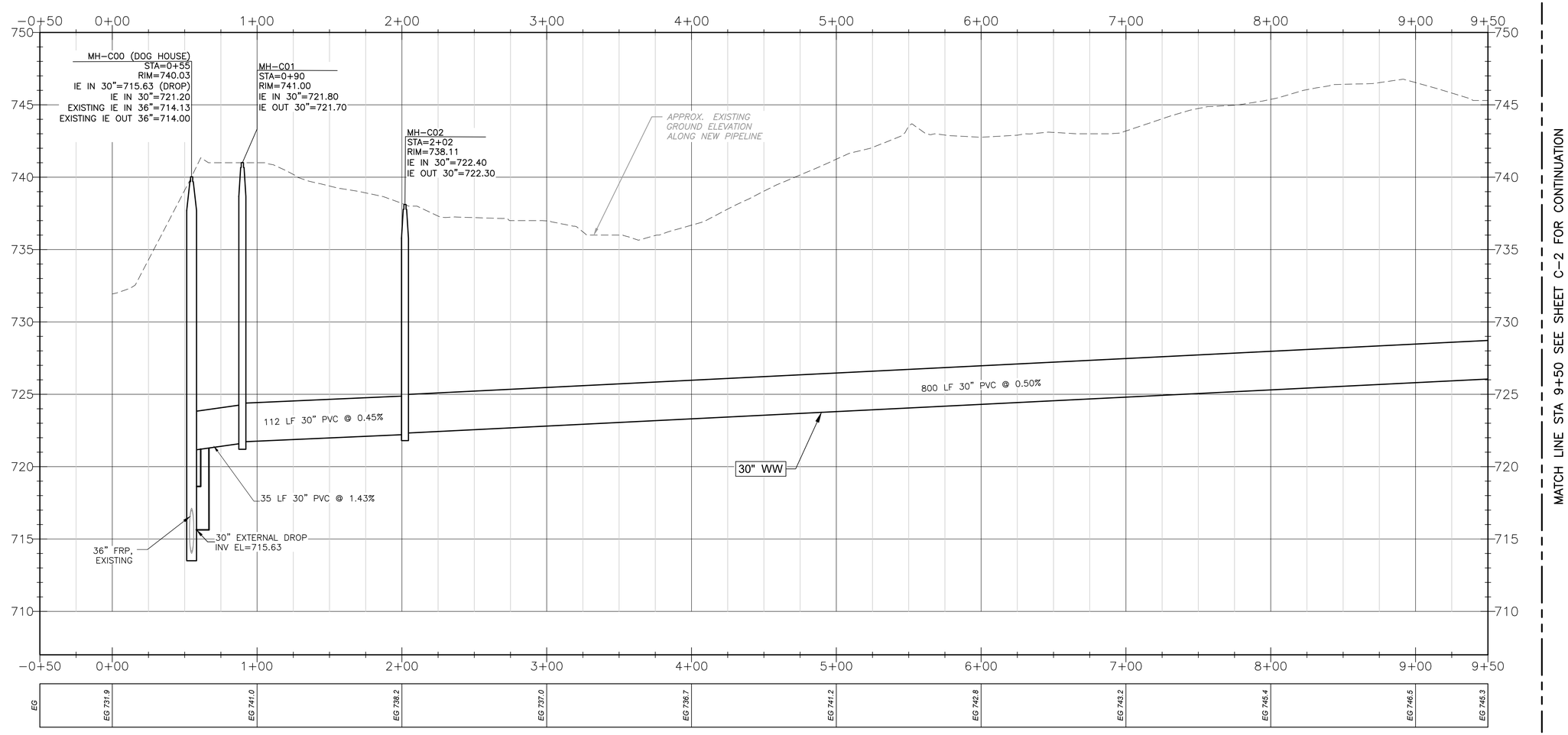

PROFILE

HORIZONTAL SCALE
1" = 40'
20 0 40

VERTICAL SCALE
1" = 4'
2 0 4

STATE OF TEXAS
GERALD S. FURRIER
129811
LICENSED
PROFESSIONAL ENGINEER
04/30/2024

REV. NO.	DATE	DRWN	CHKD	REMARKS

DESIGNED BY: A KAJALE
DRAWN BY: S MANISANKAR
SHEET CHK'D BY: ASHWIN G
CROSS CHK'D BY: A RHAMES
APPROVED BY: G FURRIER
DATE: APRIL 2024

CDM Smith
8310-1 N Capital of Texas Hwy, Suite 250
Austin, TX 78731
Tel: (512) 346-1100
TBPELS Firm Registration No. F-3043

CITY OF GEORGETOWN, TEXAS

SOUTH LAKE TO SOUTH FORK WASTEWATER IMPROVEMENTS

BASELINE C
PLAN AND PROFILE
FROM STA 0+00 TO STA 9+50

PROJECT NO. 2048-272644
FILE NAME: C001PLPR.DWG

SHEET NO.
C-1

XREFs: [CDMS_2234, CEZ001SV, CEP000SS_do not use, CWP001LS, CWP003ST, CDMS-003-S Lake to SF Interceptor-TOPO-SURF, CEP0051P] Images: []
Last saved by: SAMDURAM Time: 03-05-2024 18:04:36
pw:\\cdmsmith-azc2-pw.bentley.com:pw_pl1\2048\272644\04 Design Services NM_50%\02 Civil\10 BIM_CADD\C001PLPR.dwg
©2022 CDM SMITH ALL RIGHTS RESERVED.
REUSE OF DOCUMENTS: THESE DOCUMENTS AND DESIGNS PROVIDED BY PROFESSIONAL SERVICE, INCORPORATED HEREIN, ARE THE PROPERTY OF CDM SMITH AND ARE NOT TO BE USED, IN WHOLE OR PART, FOR ANY OTHER PROJECT WITHOUT THE WRITTEN AUTHORIZATION OF CDM SMITH.

Plotted: 5/3/2024 11:24:33 AM

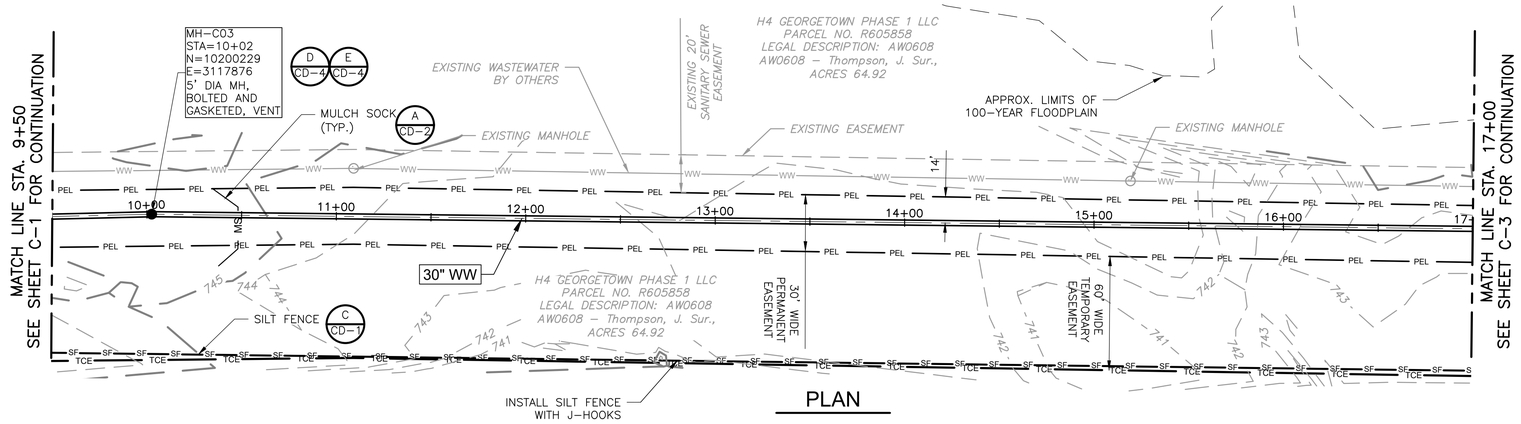

PLAN

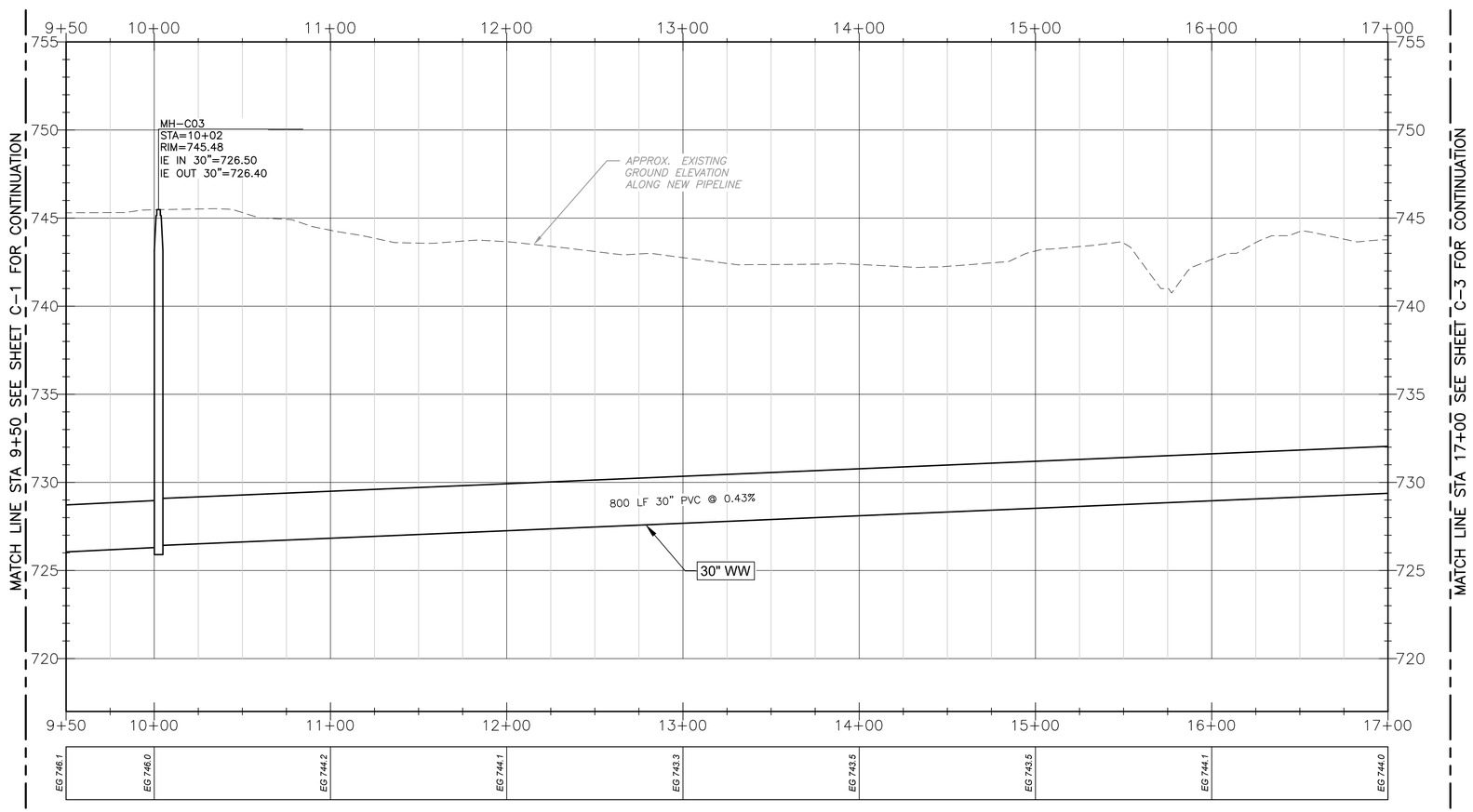

PROFILE

HORIZONTAL SCALE
1" = 40'
20 0 40

VERTICAL SCALE
1" = 4'
2 0 4

STATE OF TEXAS
GERALD S. FURRIER
129811
LICENSED
PROFESSIONAL ENGINEER

04/30/2024

REV. NO.	DATE	DRWN	CHKD	REMARKS

DESIGNED BY: A KAJALE
DRAWN BY: S MANISANKAR
SHEET CHK'D BY: ASHWIN G
CROSS CHK'D BY: A RHAMES
APPROVED BY: G FURRIER
DATE: APRIL 2024

CDM Smith
8310-1 N Capital of Texas Hwy, Suite 250
Austin, TX 78731
Tel: (512) 346-1100
TBPELS Firm Registration No. F-3043

CITY OF GEORGETOWN, TEXAS

SOUTH LAKE TO SOUTH FORK
WASTEWATER IMPROVEMENTS

BASELINE C
PLAN AND PROFILE
FROM STA 9+50 TO STA 17+00

PROJECT NO. 2048-272644
FILE NAME: C002PLPR.DWG

SHEET NO.
C-2

Plotted: 5/3/2024 11:25:40 AM

XREFs: [CDMS_2234, CEZ001SV, CEP000SS_do not use, CWP001LS, CWP003ST, CDMS-003-S Lake to SF Interceptor-TOPO-SURF, CEP005TP] Images: []
Last saved by: SAMIDURAM Time: 03-05-2024 18:06:09
pw:\\cdmsmith-a202-pw.bentley.com:pw_pi1\2048\272644\04 Design Services NM_50%\02 Civil\10 BIM_CADD\C002PLPR.dwg
©2022 CDM SMITH ALL RIGHTS RESERVED.
REUSE OF DOCUMENTS: THESE DOCUMENTS AND DESIGNS PROVIDED BY PROFESSIONAL SERVICE, INCORPORATED HEREIN, ARE THE PROPERTY OF CDM SMITH AND ARE NOT TO BE USED, IN WHOLE OR PART, FOR ANY OTHER PROJECT WITHOUT THE WRITTEN AUTHORIZATION OF CDM SMITH.

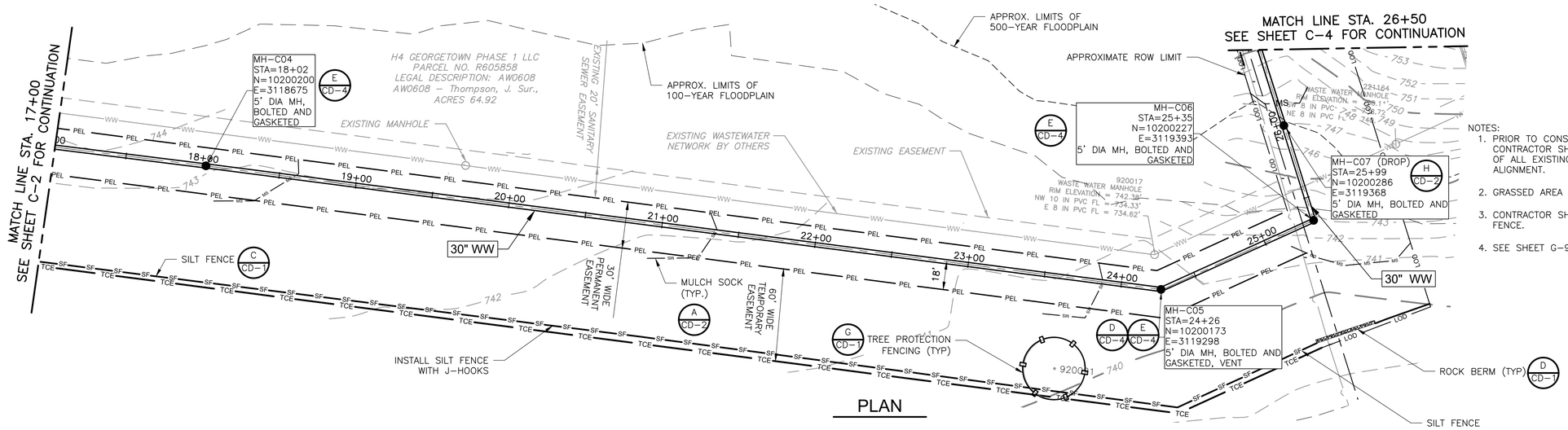

NOTES:

1. PRIOR TO CONSTRUCTION OF ANY TRUNKSEWER SEGMENT, THE CONTRACTOR SHALL IDENTIFY THE LOCATION, SIZE, AND ELEVATION OF ALL EXISTING WASTEWATER LINES CROSSING THE PROPOSED ALIGNMENT.
2. GRASSED AREA TO BE SODDED AND WATERED AFTER CONSTRUCTION.
3. CONTRACTOR SHALL INSTALL ROCK BERM AT LOW POINT OF SILT FENCE.
4. SEE SHEET G-9 FOR TREE TABLE.

PLAN

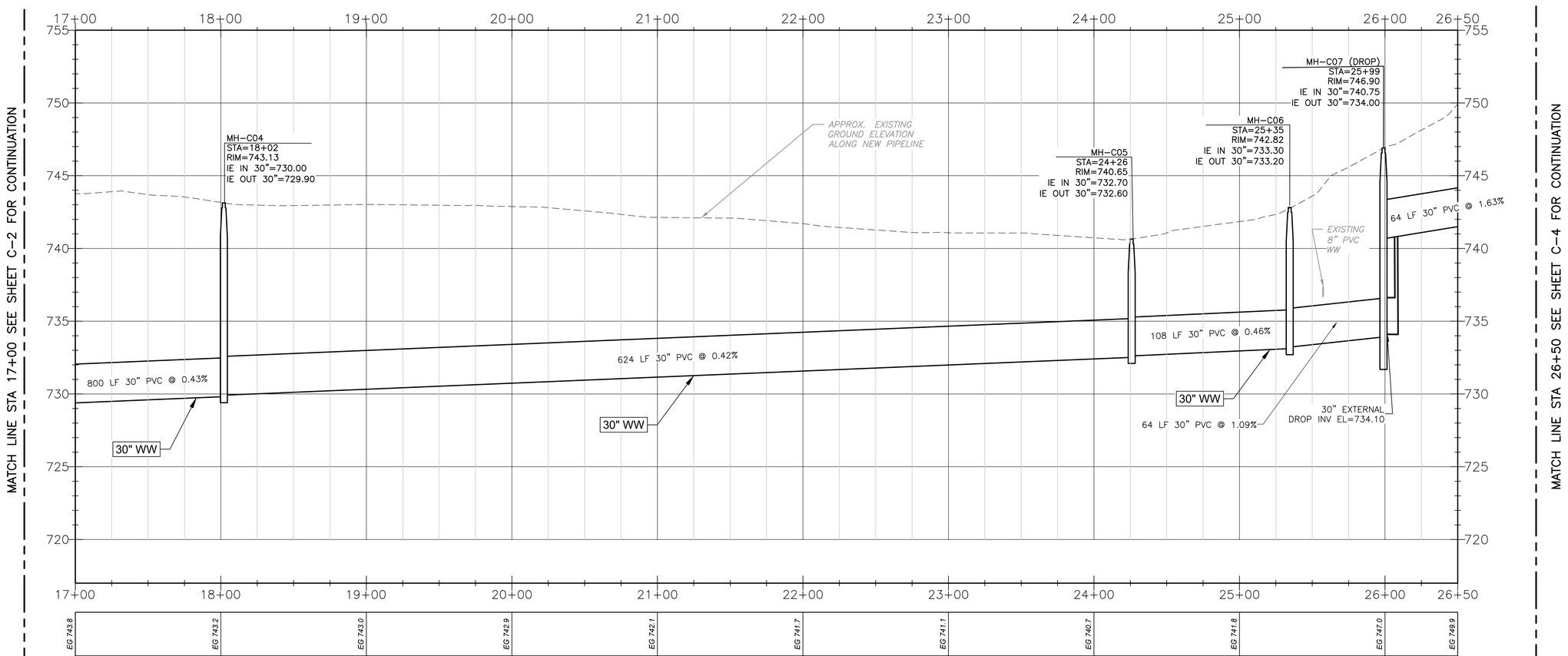

PROFILE

HORIZONTAL SCALE
1" = 40'
20 0 40

VERTICAL SCALE
1" = 4'
2 0 4

STATE OF TEXAS
GERALD S. FURRIER
129811
LICENSED
PROFESSIONAL ENGINEER
04/30/2024

REV. NO.	DATE	DRWN	CHKD	REMARKS

DESIGNED BY: A KAJALE
DRAWN BY: S MANISANKAR
SHEET CHK'D BY: ASHWIN G
CROSS CHK'D BY: A RHAMES
APPROVED BY: G FURRIER
DATE: APRIL 2024

CDM Smith
8310-1 N Capital of Texas Hwy, Suite 250
Austin, TX 78731
Tel: (512) 346-1100
TBPELS Firm Registration No. F-3043

CITY OF GEORGETOWN, TEXAS

SOUTH LAKE TO SOUTH FORK
WASTEWATER IMPROVEMENTS

BASELINE C
PLAN AND PROFILE
FROM STA 17+00 TO STA 26+50

PROJECT NO. 2048-272644
FILE NAME: C003PLPR.DWG
SHEET NO.
C-3

XREFs: [CDMS_2234, CEZ001SV, CEP000SS_do not use, CWP001LS, CWP003ST, CDMS-003-S Lake to SF Interceptor-TOPO-SURF, CEP005TP] Images: []
Last saved by: SAMIDURAM Time: 06-05-2024 13:27:22
pw:\\cdmsmith-gz02-pw.bentley.com:pw_pf1\2048\272644\04 Design Services NM_50%\02 Civil\10 BIM_CADD\C003PLPR.dwg
© 2022 CDM SMITH ALL RIGHTS RESERVED
REUSE OF DOCUMENTS: THESE DOCUMENTS AND DESIGNS PROVIDED BY PROFESSIONAL SERVICE, INCORPORATED HEREIN, ARE THE PROPERTY OF CDM SMITH AND ARE NOT TO BE USED, IN WHOLE OR PART, FOR ANY OTHER PROJECT WITHOUT THE WRITTEN AUTHORIZATION OF CDM SMITH.

Plotted: 5/6/2024 11:35:33 AM

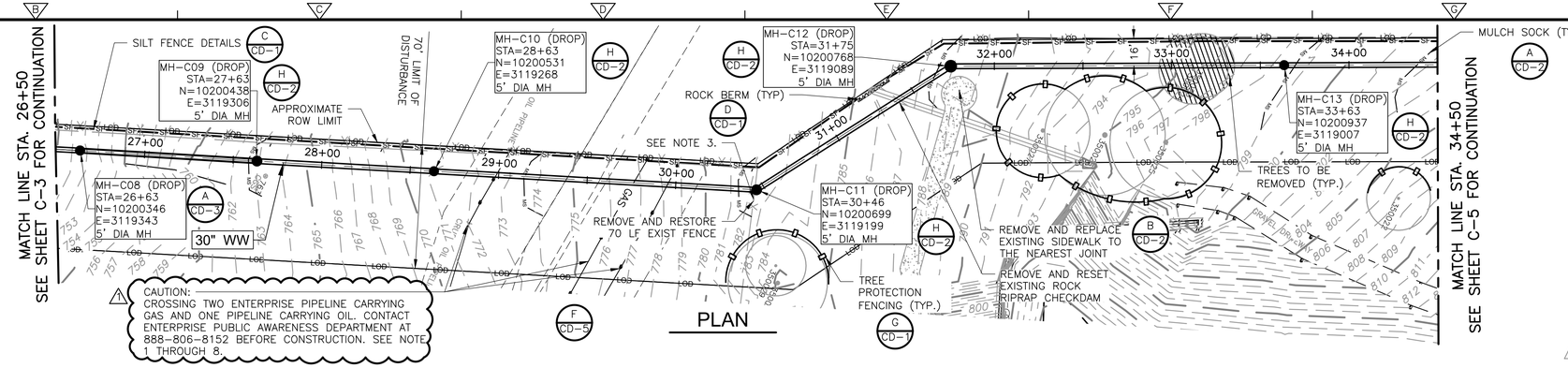

NOTE:

1. CONTRACTOR MUST CALL 811 AT LEAST ONE WEEK PRIOR TO EXCAVATION IN THE OIL AND GAS PIPELINE EASEMENT.
2. EXISTING GAS LINE IS APPROXIMATELY 3'-3" BELOW GRADE. THE CONTRACTOR SHALL VERIFY THE DEPTH OF THE ENTERPRISE PIPELINE PRIOR TO EXCAVATION.
3. CONTRACTOR SHALL REMOVE AND REPLACE EXISTING BARBED WIRE FENCE TO THE NEAREST POST.
4. NO EXCAVATION SHALL BE PERFORMED WITHIN ENTERPRISE'S RIGHTS-OF-WAY WITHOUT APPROVAL FROM ENTERPRISE. ALL EXCAVATION WITHIN THE ENTERPRISE'S RIGHTS-OF-WAY SHALL BE PERFORMED PER ENTERPRISE GENERAL EXCAVATION GUIDELINES.
5. ENTERPRISE DEFINES THE TOLERANCE ZONE AS 18" FROM THE OUTER EDGE OF THE PIPE (IN ALL DIRECTIONS), OR AS DEFINED BY THE STATE REGULATIONS, WHICHEVER IS GREATER. NO MECHANIZED EQUIPMENT IS ALLOWED WITHIN THE TOLERANCE ZONE.
6. ANY EXCAVATION TAKING PLACE WITHIN THE TOLERANCE ZONE MUST BE DONE BY HAND.
7. NO HEAVY EQUIPMENT IS ALLOWED TO WORK DIRECTLY OVER THE PIPELINE.
8. ALL MECHANICAL DIGGING EQUIPMENT MUST DIG PARALLEL TO THE PIPELINES AND HAVE THE TEETH REMOVED OR BARRED WITH A PLATE WELDED ACROSS THE BUCKET.

MATCH LINE STA. 26+50 SEE SHEET C-3 FOR CONTINUATION

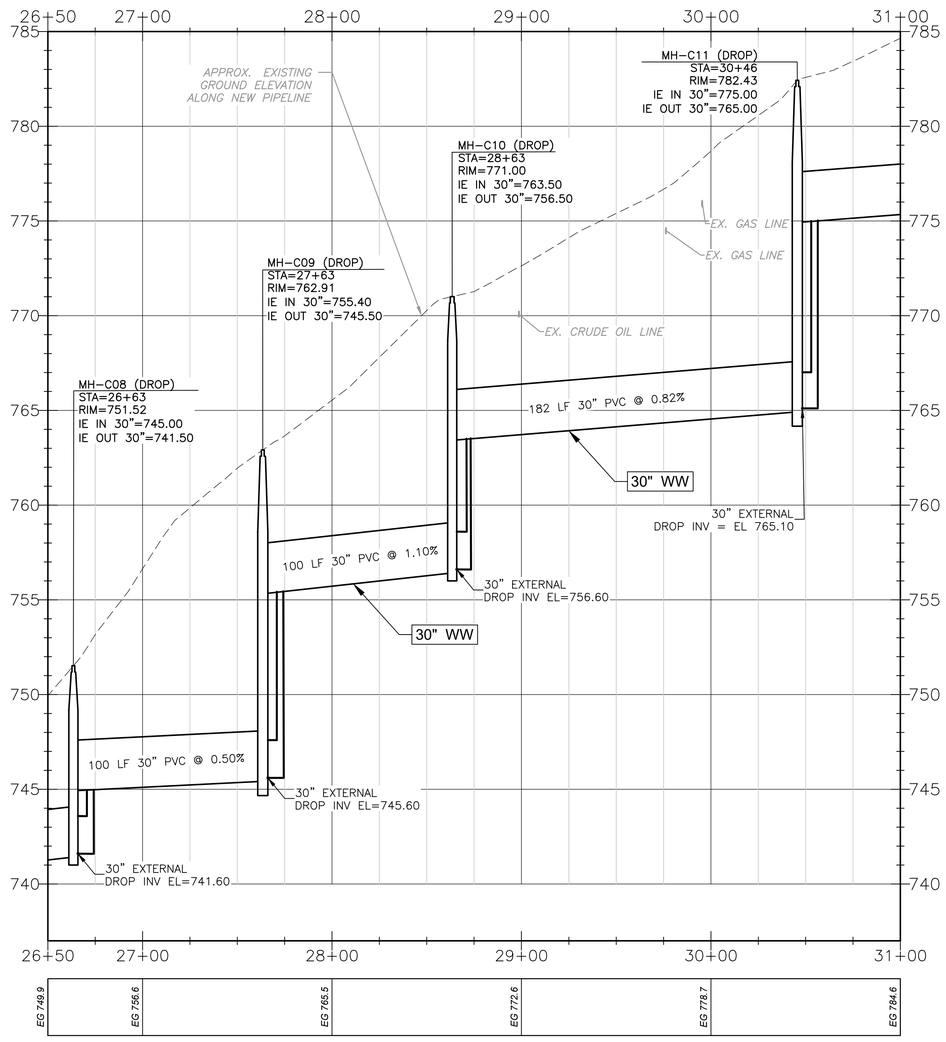

PROFILE

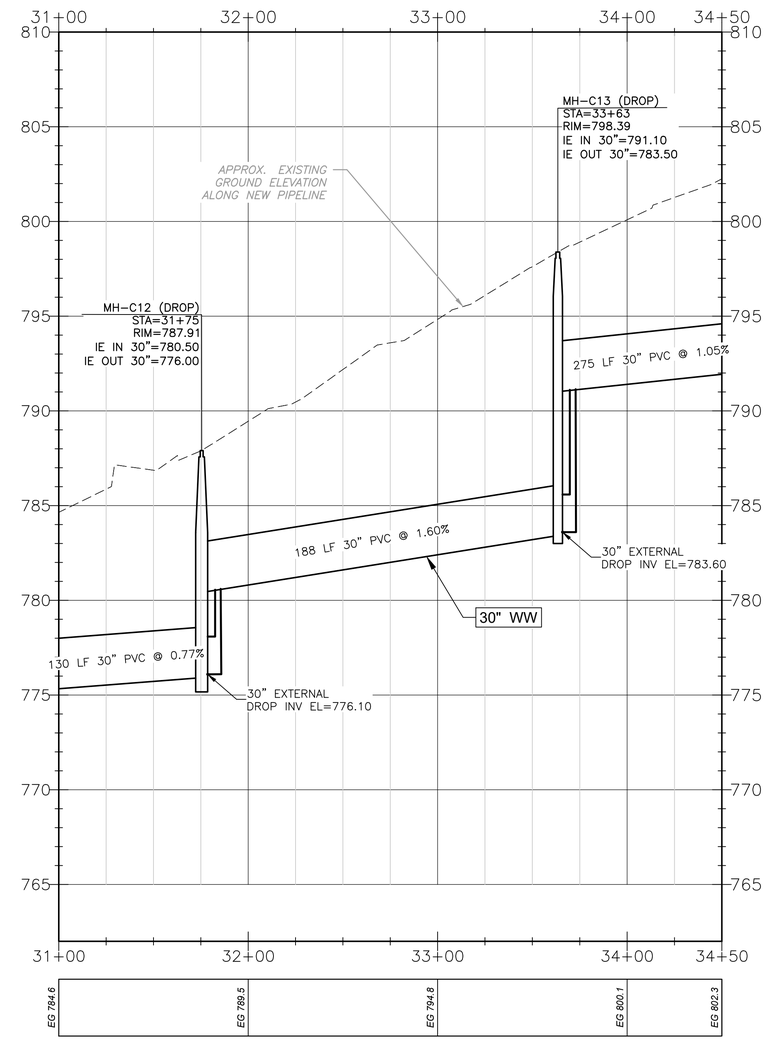

PROFILE

MATCH LINE STA 26+50 SEE SHEET C-3 FOR CONTINUATION

MATCH LINE STA 34+50 SEE SHEET C-5 FOR CONTINUATION

HORIZONTAL SCALE
1" = 40'
20 0 40

VERTICAL SCALE
1" = 4'
2 0 4

STATE OF TEXAS
GERALD S. FURRIER
129811
LICENSED
PROFESSIONAL ENGINEER

04/30/2024

REV. NO.	DATE	DRWN	CHKD	REMARKS
1	5/29/24	AK	GF	ADDENDUM 2

DESIGNED BY: A KAJALE
DRAWN BY: S MANISANKAR
SHEET CHK'D BY: ASHWIN G
CROSS CHK'D BY: A RHAMES
APPROVED BY: G FURRIER
DATE: APRIL 2024

CDM Smith
8310-1 N Capital of Texas Hwy, Suite 250
Austin, TX 78731
Tel: (512) 346-1100
TBPELS Firm Registration No. F-3043

CITY OF GEORGETOWN, TEXAS

SOUTH LAKE TO SOUTH FORK
WASTEWATER IMPROVEMENTS

BASELINE C
PLAN AND PROFILE
FROM STA 26+50 TO STA 34+50

PROJECT NO. 2048-272644
FILE NAME: C004PLPR.DWG
SHEET NO.
C-4

Plotted: 5/29/2024 10:44:23 AM

xREFs: [CDMS_2234, CEZ001SV, CEP0005S_do not use, CWP001LS, CWP003ST_1, CDMS-003-S Lake to SF Interceptor-TOPO-SURF, CEP005TP] Images: []
Last saved by: KAJALSAN Time: 5/29/2024 10:35:07 AM
pw:\\cdmsmith-az02-pw.bentley.com:pw_pl1\2048\272644\04 Design Services NM_50%\02 Civil\10 BIM_CADD\C004PLPR.dwg
© 2022 CDM SMITH ALL RIGHTS RESERVED
REUSE OF DOCUMENTS: THESE DOCUMENTS AND DESIGNS PROVIDED BY PROFESSIONAL SERVICE, INCORPORATED HEREIN, ARE THE PROPERTY OF CDM SMITH AND ARE NOT TO BE USED, IN WHOLE OR PART, FOR ANY OTHER PROJECT WITHOUT THE WRITTEN AUTHORIZATION OF CDM SMITH.

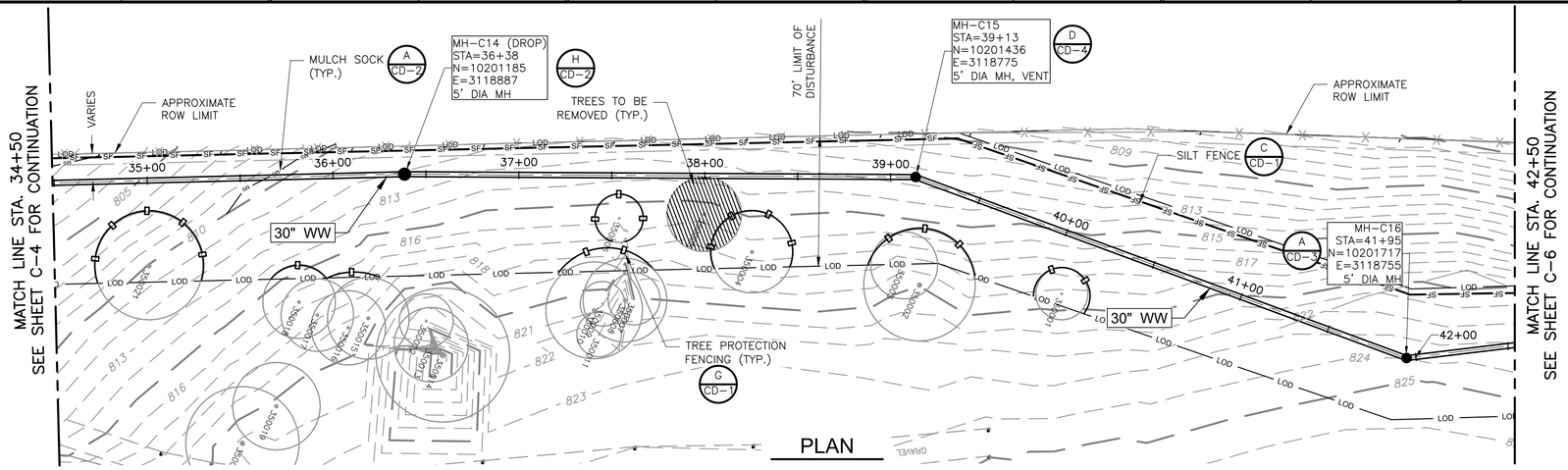

PLAN

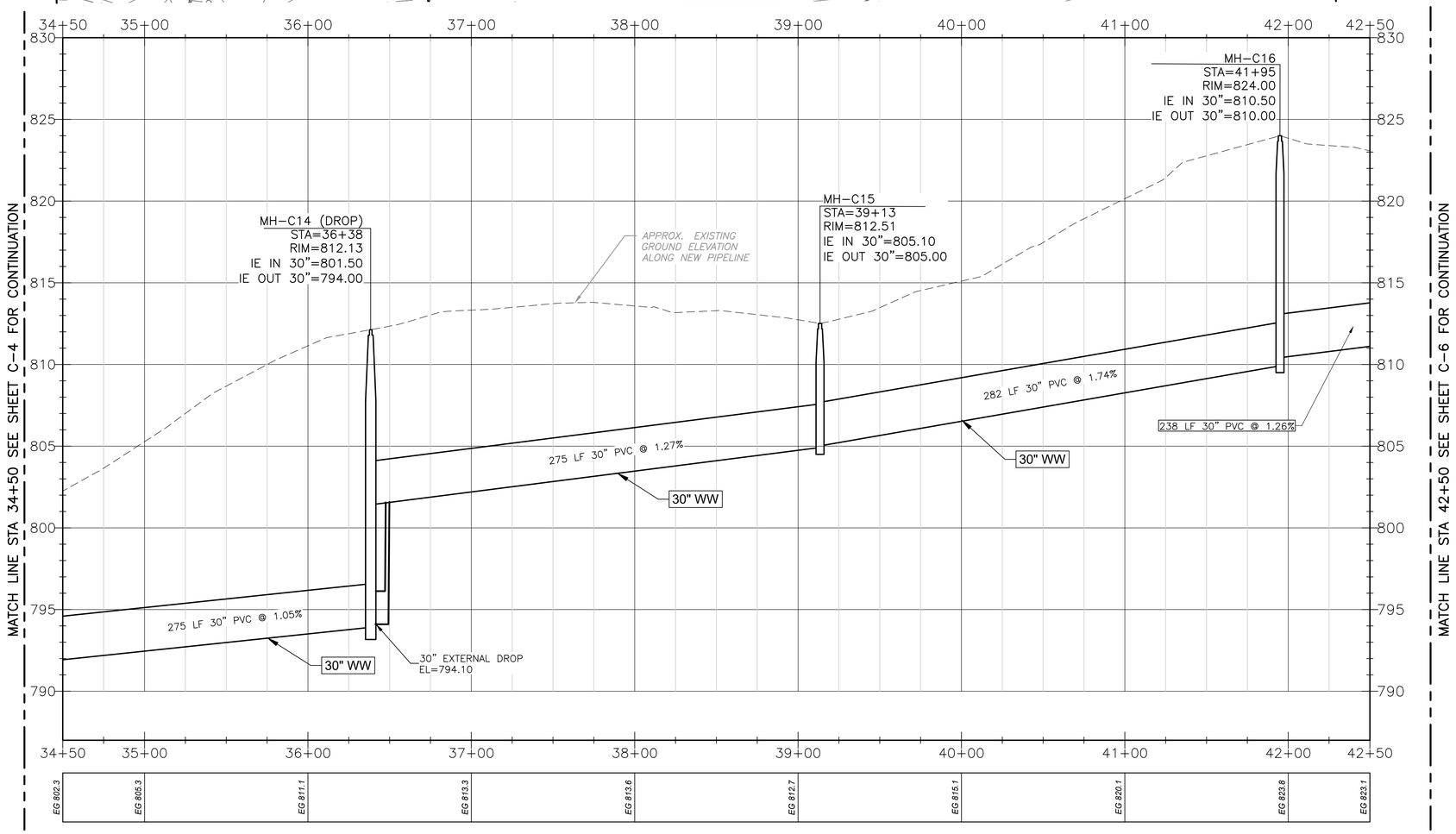

PROFILE

HORIZONTAL SCALE
1" = 40'
20 0 40

VERTICAL SCALE
1" = 4'
2 0 4

STATE OF TEXAS
GERALD S. FURRIER
129811
LICENSED
PROFESSIONAL ENGINEER
04/30/2024

REV. NO.	DATE	DRWN	CHKD	REMARKS

DESIGNED BY: A KAJALE
DRAWN BY: S MANISANKAR
SHEET CHK'D BY: ASHWIN G
CROSS CHK'D BY: A RHAMES
APPROVED BY: G FURRIER
DATE: APRIL 2024

CDM Smith
8310-1 N Capital of Texas Hwy, Suite 250
Austin, TX 78731
Tel: (512) 346-1100
TBPELS Firm Registration No. F-3043

CITY OF GEORGETOWN, TEXAS

SOUTH LAKE TO SOUTH FORK
WASTEWATER IMPROVEMENTS

BASELINE C
PLAN AND PROFILE
FROM STA 34+50 TO STA 42+50

PROJECT NO. 2048-272644
FILE NAME: C005PLPR.DWG
SHEET NO.
C-5

Plotted: 5/3/2024 11:32:24 AM

XREFs: [CDMS_2234, CEZ001SV, CEP000SS_do not use, CWP001LS, CWP003ST, CDMS-003-S Lake to SF Interceptor-TOPO-SURF, CEP005TP] Images: []
Last saved by: SAMIDURAM Time: 03-05-2024 18:12:07
pw:\\cdmsmith-az02-pw.bentley.com:pw_pi\2048\272644\04 Design Services NM_50%\02 Civil\10 BIM_CADD\C005PLPR.dwg
©2022 CDM SMITH ALL RIGHTS RESERVED.
REUSE OF DOCUMENTS: THESE DOCUMENTS AND DESIGNS PROVIDED BY PROFESSIONAL SERVICE, INCORPORATED HEREIN, ARE THE PROPERTY OF CDM SMITH. THEY ARE NOT TO BE USED, IN WHOLE OR PART, FOR ANY OTHER PROJECT WITHOUT THE WRITTEN AUTHORIZATION OF CDM SMITH.

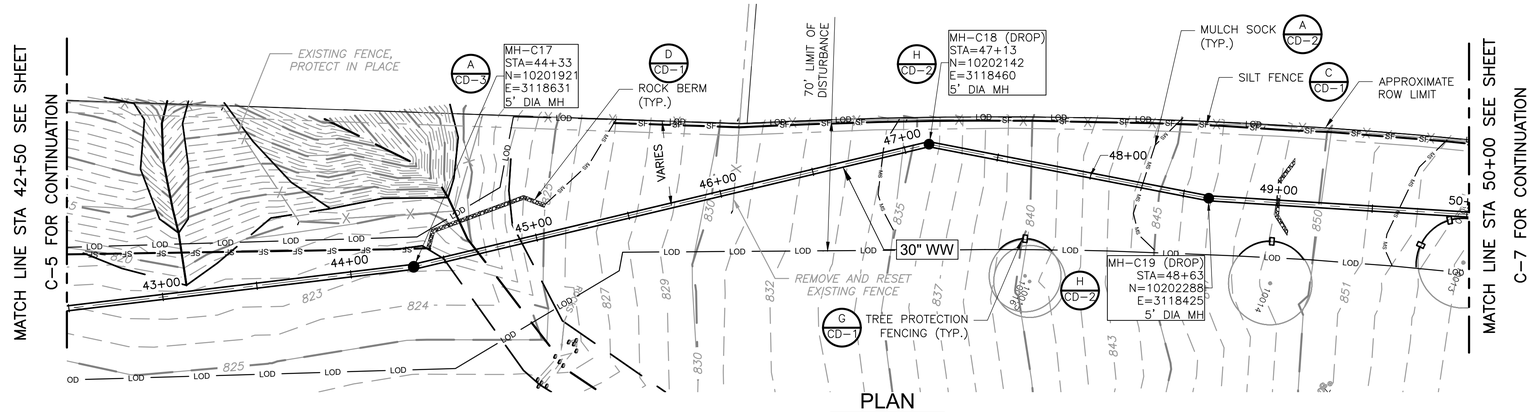

PLAN

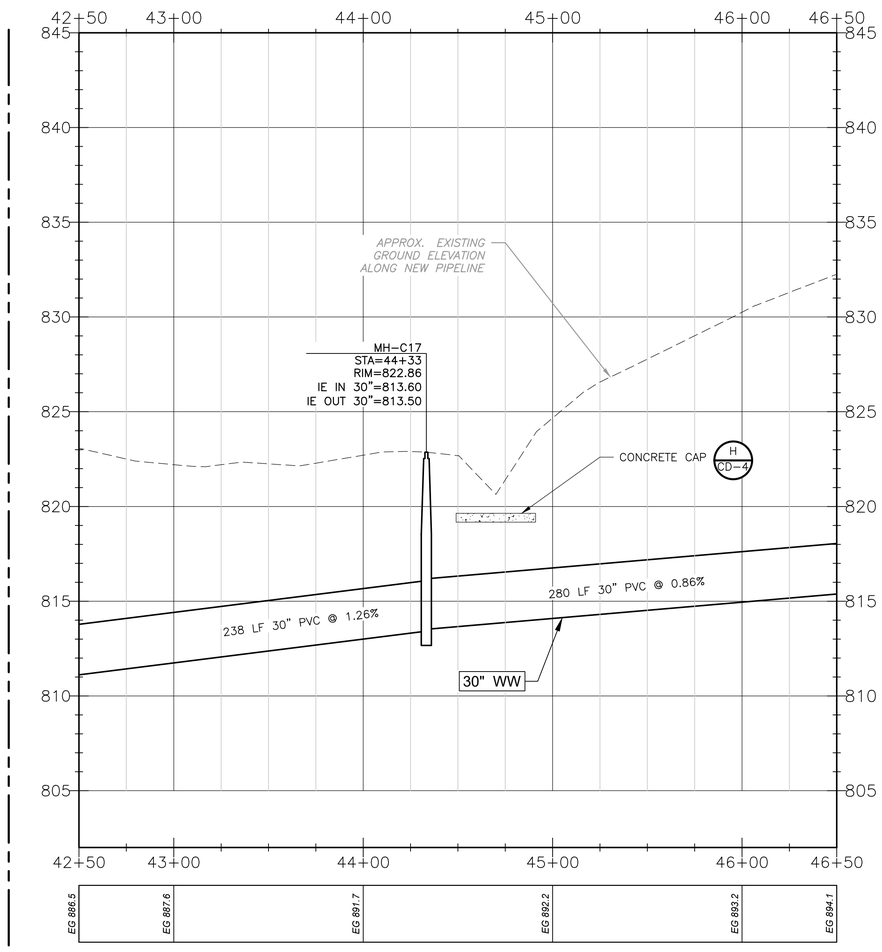

PROFILE

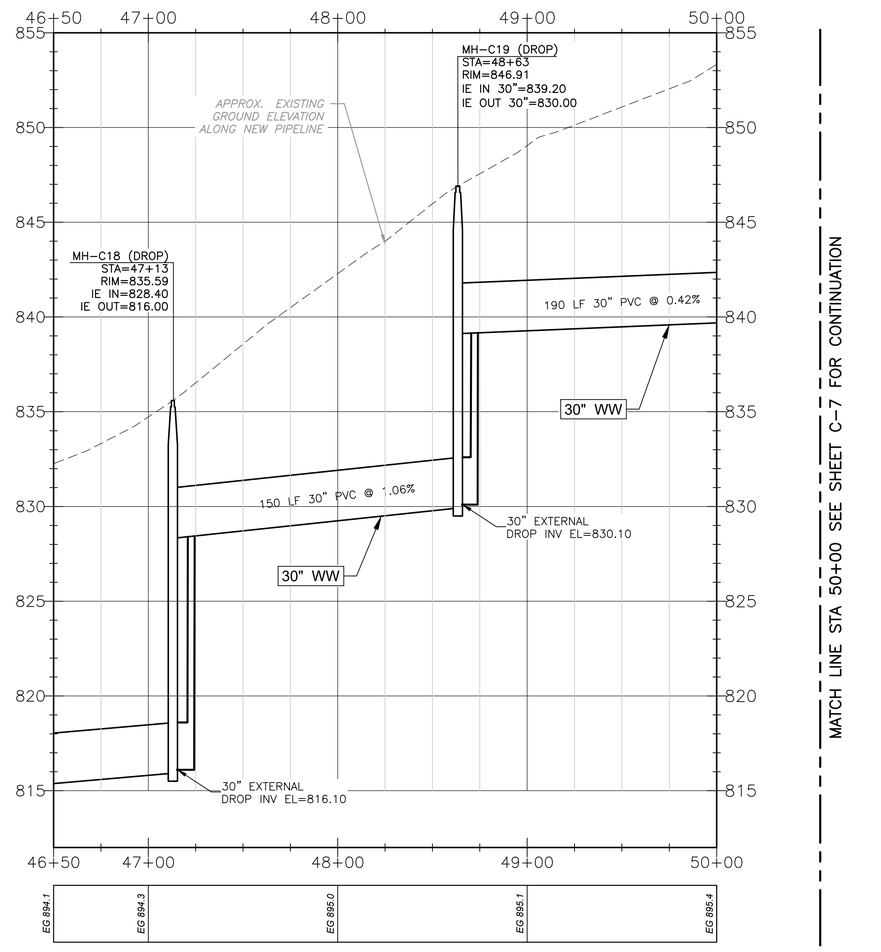

PROFILE

HORIZONTAL SCALE
1" = 40'
20 0 40

VERTICAL SCALE
1" = 4'
2 0 4

STATE OF TEXAS
GERALD S. FURRIER
129811
LICENSED
PROFESSIONAL ENGINEER

04/30/2024

REV. NO.	DATE	DRWN	CHKD	REMARKS

DESIGNED BY: A AKAJALE
DRAWN BY: S MANISANKAR
SHEET CHK'D BY: ASHWIN G
CROSS CHK'D BY: A RHAMES
APPROVED BY: G FURRIER
DATE: APRIL 2024

CDM Smith
8310-1 N Capital of Texas Hwy, Suite 250
Austin, TX 78731
Tel: (512) 346-1100
TBPELS Firm Registration No. F-3043

CITY OF GEORGETOWN, TEXAS

SOUTH LAKE TO SOUTH FORK WASTEWATER IMPROVEMENTS

BASELINE C
PLAN AND PROFILE
FROM STA 42+50 TO STA 50+00

PROJECT NO. 2048-272644
FILE NAME: C006PLPR.DWG
SHEET NO.
C-6

XREFs: [CEZ001SV, CEP000SS_do not use, CWP001LS, CWP003ST, CDMS-003-S Lake to SF Interceptor-TOPO-SURF_1, CDMS_2234_South_lake_to_South_fork_Border_PP, CEP005TP] Images: []
Last saved by: KAJALEAN Time: 5/3/2024 11:37:18 AM
pw:\\cdmsmith-az02-pw.bentley.com:pw_pl1\2048\272644\04 Design Services NM_50%\02 Civil\10 BIM_CADD\C006PLPR.dwg
© 2022 CDM SMITH ALL RIGHTS RESERVED.
REUSE OF DOCUMENTS: THESE DOCUMENTS AND DESIGNS PROVIDED BY PROFESSIONAL SERVICE, INCORPORATED HEREIN, ARE THE PROPERTY OF CDM SMITH AND ARE NOT TO BE USED, IN WHOLE OR PART, FOR ANY OTHER PROJECT WITHOUT THE WRITTEN AUTHORIZATION OF CDM SMITH.

Plotted: 5/5/2024 6:44:36 PM

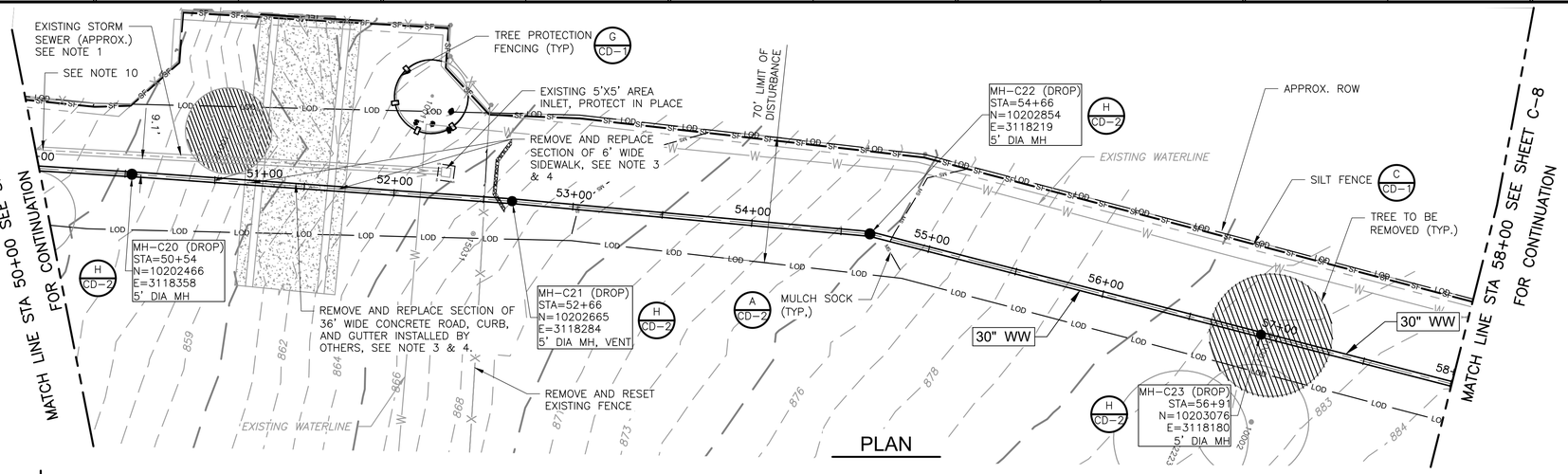

PLAN

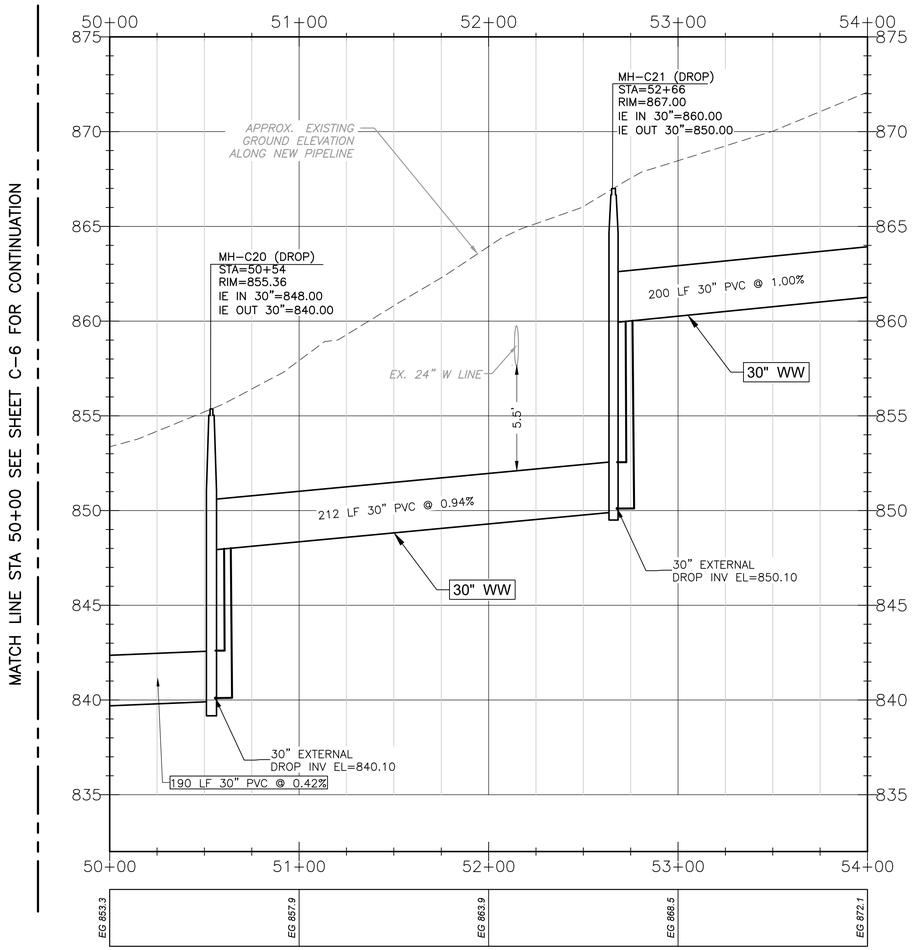

PROFILE

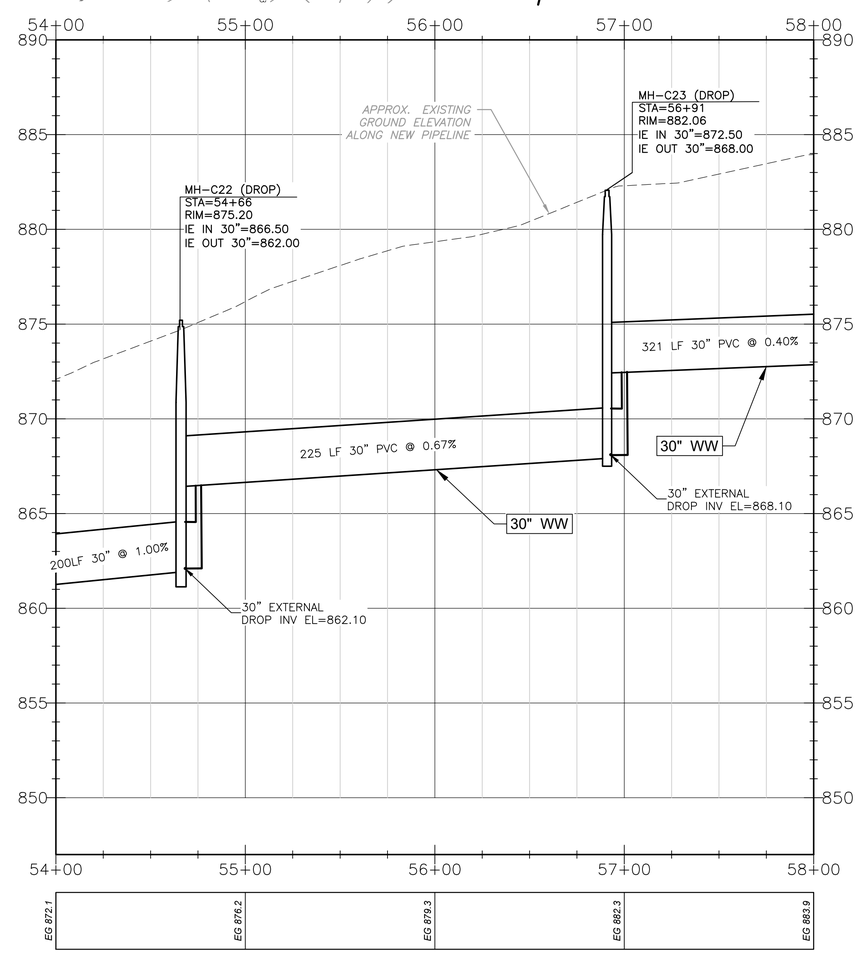

PROFILE

NOTES:

1. PRIOR TO CONSTRUCTION OF ANY INTERCEPTOR SEGMENT, THE CONTRACTOR SHALL IDENTIFY THE LOCATION, SIZE, AND ELEVATION OF ALL EXISTING WATER LINES CROSSING THE PROPOSED ALIGNMENT.
2. GRASSED AREA TO BE SODDED AND WATERED AFTER CONSTRUCTION.
3. CONTRACTOR TO REVEGETATE ALL DISTURBED AREA.
4. CONTRACTOR SHALL INSTALL ROCK BERM AT THE ROW DRAINAGE CHANNELS DURING CONSTRUCTION.
5. SEE SHEET G-9 FOR TREE LIST TABLE.
6. THE LOCATION OF THE STORM SEWER IS APPROXIMATE AND SHOWN FOR REFERENCE ONLY. CONTRACTOR SHALL FIELD VERIFY THE LOCATION AND DEPTH OF THE EXISTING STORM SEWER AND STORM INLET PRIOR TO CONSTRUCTION.
7. THE LOCATION OF THE EXISTING 36' WIDE CONCRETE DRIVE (WITH CURB AND GUTTER) AND 6' WIDE SIDEWALKS ARE APPROXIMATE AND SHOWN FOR REFERENCE ONLY. CONTRACTOR SHALL VERIFY THE DIMENSIONS AND LOCATION OF THE CONCRETE DRIVE AND SIDEWALKS. THE CONTRACTOR SHALL REPLACE THE CONCRETE DRIVE (WITH CURB AND GUTTER) AND SIDEWALKS TO ORIGINAL CONDITION PER CITY OF GEORGETOWN STANDARD DETAIL AND SPECIFICATIONS AT NO ADDITIONAL COST TO THE OWNER.
8. THE CONTRACTOR SHALL NOT BLOCK THE ENTRANCE TO WOLF RANCH WEST PHASE 7. CONTRACTOR MUST MAINTAIN ACCESS TO WOLF RANCH WEST PHASE 7 AT ALL TIMES. COORDINATION WITH WOLF RANCH WEST PHASE 7 PROPERTY MANAGEMENT WILL BE REQUIRED DURING CONSTRUCTION.
9. THE CONTRACTOR SHALL REMOVE AND REPLACE EXISTING SIDEWALK. REFER TO DETAIL B, CD-2.
10. PROTECT EXISTING SAFETY END TREATMENTS AND RIPRAP IN PLACE. IF DAMAGED, RESTORE TO ORIGINAL CONDITION AT NO ADDITIONAL COST TO THE OWNER.

HORIZONTAL SCALE
1" = 40'
20 0 40

VERTICAL SCALE
1" = 4'
2 0 4

STATE OF TEXAS
GERALD S. FURRIER
129811
LICENSED
PROFESSIONAL ENGINEER
04/30/2024

REV. NO.	DATE	DRWN	CHKD	REMARKS

DESIGNED BY: A KAJALE
DRAWN BY: S MANISANKAR
SHEET CHK'D BY: ASHWIN G
CROSS CHK'D BY: A RHAMES
APPROVED BY: G FURRIER
DATE: APRIL 2024

CDM Smith
8310-1 N Capital of Texas Hwy, Suite 250
Austin, TX 78731
Tel: (512) 346-1100
TBPELS Firm Registration No. F-3043

CITY OF GEORGETOWN, TEXAS

SOUTH LAKE TO SOUTH FORK WASTEWATER IMPROVEMENTS

BASELINE C
PLAN AND PROFILE
FROM STA 50+00 TO STA 58+00

PROJECT NO. 2048-272644
FILE NAME: C007PLPR.DWG
SHEET NO.
C-7

XREFs: [CDMS_2234, CEZ001SV, CEP000SS, do not use, CWP001LS, CWP003ST, CDMS-003-S Lake to SF Interceptor-TOPO-SURF, CWP002LS, CEP005TP] Images: []
Last saved by: KAJALEAN Time: 5/6/2024 11:58:34 AM
pw:\\cdmsmith-aa02-pw.bentley.com:pw_pi1\2048\272644\04 Design Services NM_50%\02 Civil\10 BIM_CADD\C007PLPR.dwg
©2022 CDM SMITH ALL RIGHTS RESERVED.
REUSE OF DOCUMENTS: THESE DOCUMENTS AND DESIGNS PROVIDED BY PROFESSIONAL SERVICE, INCORPORATED HEREIN, ARE THE PROPERTY OF CDM SMITH AND ARE NOT TO BE USED, IN WHOLE OR PART, FOR ANY OTHER PROJECT WITHOUT THE WRITTEN AUTHORIZATION OF CDM SMITH.

Plotted: 5/6/2024 12:07:53 PM

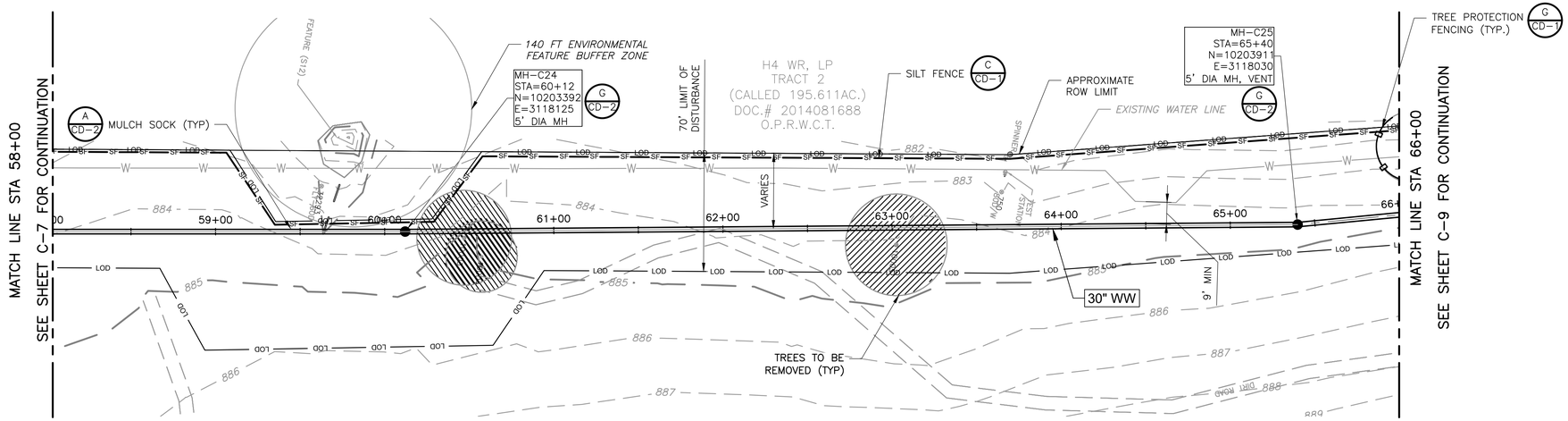

PLAN

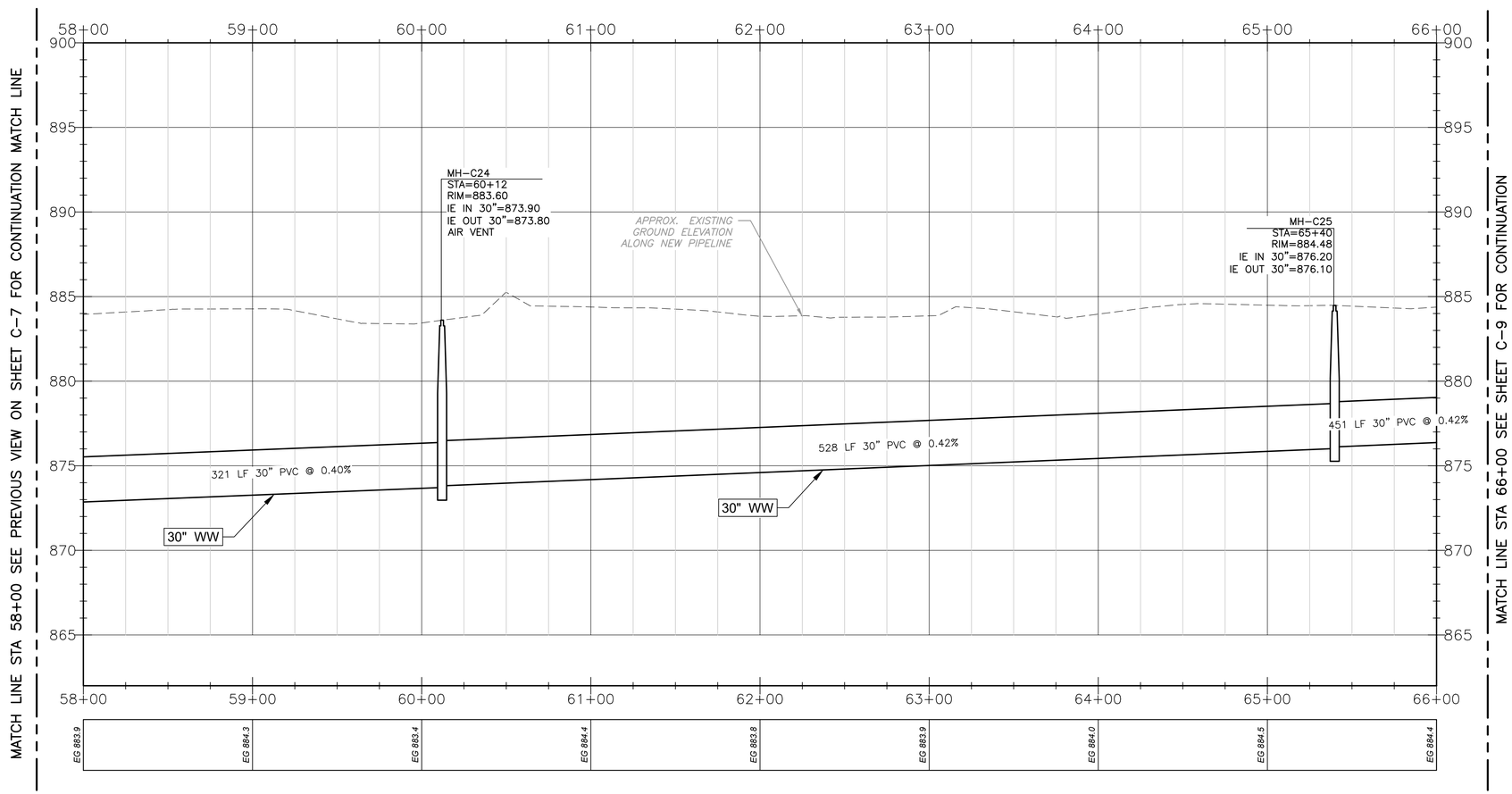

PROFILE

HORIZONTAL SCALE
1" = 40'
20 0 40

VERTICAL SCALE
1" = 4'
2 0 4

STATE OF TEXAS
GERALD S. FURRIER
129811
LICENSED
PROFESSIONAL ENGINEER
04/30/2024

REV. NO.	DATE	DRWN	CHKD	REMARKS

DESIGNED BY: A KAJALE
DRAWN BY: S MANISANKAR
SHEET CHK'D BY: ASHWIN G
CROSS CHK'D BY: A RHAMES
APPROVED BY: G FURRIER
DATE: APRIL 2024

CDM Smith
8310-1 N Capital of Texas Hwy, Suite 250
Austin, TX 78731
Tel: (512) 346-1100
TBPELS Firm Registration No. F-3043

CITY OF GEORGETOWN, TEXAS

SOUTH LAKE TO SOUTH FORK
WASTEWATER IMPROVEMENTS

BASELINE C
PLAN AND PROFILE
FROM STA 58+00 TO STA 66+00

PROJECT NO. 2048-272644
FILE NAME: C008PLPR.DWG
SHEET NO.
C-8

Plotted: 5/6/2024 12:19:31 PM

XREFs: [CDMS_2234, CEZ001SV, CEP000SS, do not use, CWP001LS, CWP003ST, CDMS-003-S Lake to SF Interceptor-TOPO-SURF, CWP002LS, CEP000SS, CEP005TP] Images: []
Last saved by: SAMIDURAM Time: 06-05-2024 15:29:58
pw:\\cdmsmith-a2o2-pw.bentley.com:pw_pi\2048\272644\04 Design Services NM_50%\02 Civil\10 BIM_CADD\C008PLPR.dwg
©2022 CDM SMITH ALL RIGHTS RESERVED.
REUSE OF DOCUMENTS: THESE DOCUMENTS AND DESIGNS PROVIDED BY PROFESSIONAL SERVICE, INCORPORATED HEREIN, ARE THE PROPERTY OF CDM SMITH AND ARE NOT TO BE USED, IN WHOLE OR PART, FOR ANY OTHER PROJECT WITHOUT THE WRITTEN AUTHORIZATION OF CDM SMITH.

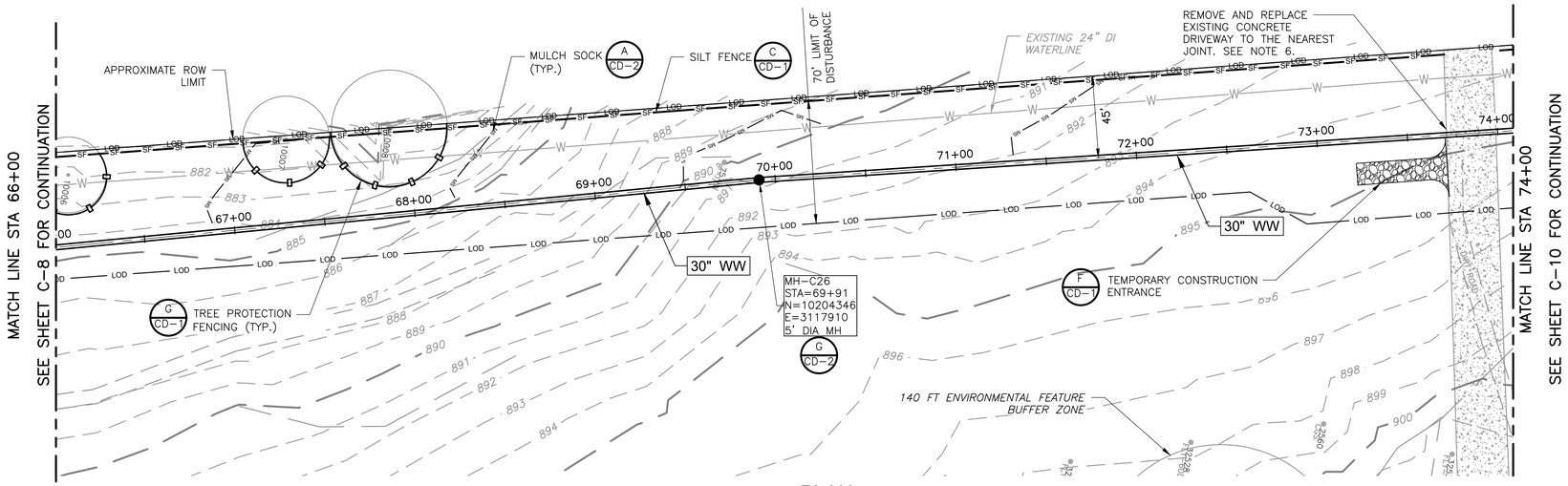

PLAN

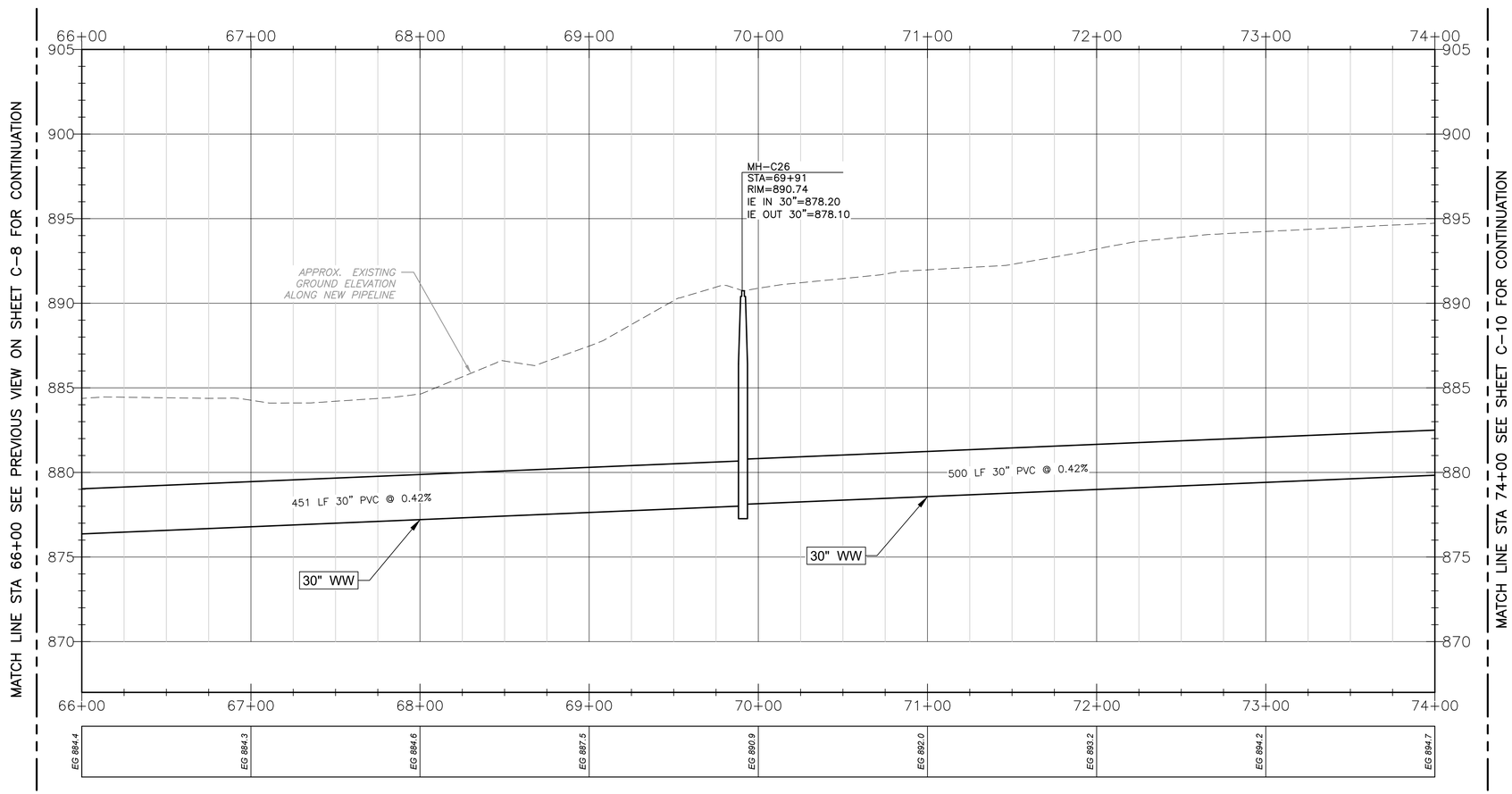

PROFILE

NOTES:

1. PRIOR TO CONSTRUCTION OF ANY INTERCEPTOR SEGMENT, THE CONTRACTOR SHALL IDENTIFY THE LOCATION, SIZE, AND ELEVATION OF ALL EXISTING WATER LINES CROSSING THE PROPOSED ALIGNMENT.
2. GRASSED AREA TO BE SODDED AND WATERED AFTER CONSTRUCTION.
3. CONTRACTOR TO REVEGETATE ALL DISTURBED AREA.
4. CONTRACTOR SHALL INSTALL ROCK BERM AT LOW POINT OF SILT FENCE.
5. SEE SHEET G-9 FOR TREE LIST TABLE.
6. THE LOCATION OF THE EXISTING DRIVEWAY IS APPROXIMATE AND SHALL BE FIELD VERIFIED. COORDINATION WITH THE CITIZEN HOUSE WOLF RANCH PROPERTY MANAGEMENT WILL BE REQUIRED. CONTRACTOR MUST ENSURE THE TENANTS HAVE ACCESS TO THE PROPERTY AT ALL TIMES.
7. ANY DAMAGE TO EXISTING LANDSCAPED PLANTS AND TREES SHALL BE REPLACED WITH NO ADDITIONAL COST TO THE OWNER.

HORIZONTAL SCALE
1" = 40'
20 0 40

VERTICAL SCALE
1" = 4'
2 0 4

STATE OF TEXAS
GERALD S. FURRIER
129811
LICENSED
PROFESSIONAL ENGINEER
04/30/2024

REV. NO.	DATE	DRWN	CHKD	REMARKS

DESIGNED BY: A KAJALE
DRAWN BY: S MANISANKAR
SHEET CHK'D BY: ASHWIN G
CROSS CHK'D BY: A RHAMES
APPROVED BY: G FURRIER
DATE: APRIL 2024

CDM Smith
8310-1 N Capital of Texas Hwy, Suite 250
Austin, TX 78731
Tel: (512) 346-1100
TBPELS Firm Registration No. F-3043

CITY OF GEORGETOWN, TEXAS

SOUTH LAKE TO SOUTH FORK WASTEWATER IMPROVEMENTS

BASELINE C
PLAN AND PROFILE
FROM STA 66+00 TO STA 74+00

PROJECT NO. 2048-272644
FILE NAME: C009PLPR.DWG
SHEET NO.
C-9

XREFs: [CEZ001SV, CEP000SS, CVP001LS, CVP003ST, CDMS-003-S Lake to SF Interceptor-TOPO-SURF, CDMS_2234_South_lake_to_South_fork_Border_PP, CEP005TP] [Images: []]
Last saved by: SAMIDURAIM Time: 06-05-2024 15:30:22
pw:\\cdmsmith-sa02-pw.bentley.com:pw_pt\12048\272644\04 Design Services NM_50%\02 Civil\10 BIM_CADD\C009PLPR.dwg
© 2022 CDM SMITH ALL RIGHTS RESERVED
REUSE OF DOCUMENTS: THESE DOCUMENTS AND DESIGNS PROVIDED BY PROFESSIONAL SERVICE, INCORPORATED HEREIN, ARE THE PROPERTY OF CDM SMITH AND ARE NOT TO BE USED, IN WHOLE OR PART, FOR ANY OTHER PROJECT WITHOUT THE WRITTEN AUTHORIZATION OF CDM SMITH.

Plotted: 5/6/2024 12:34:22 PM

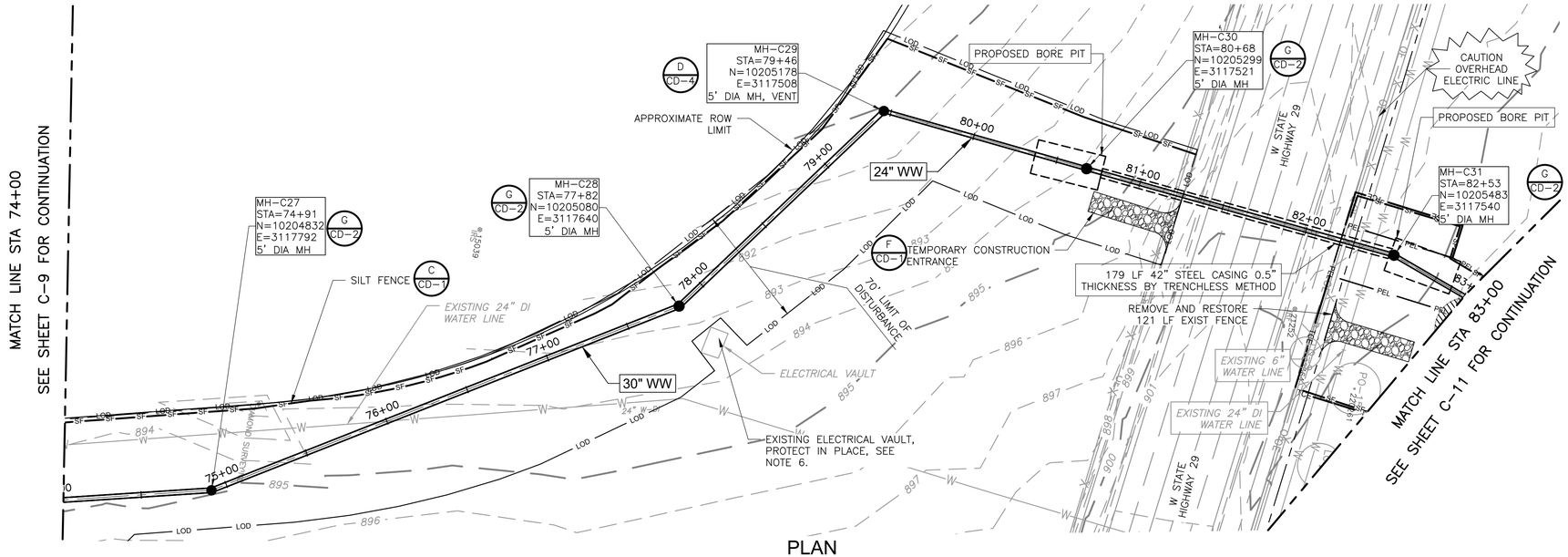

PLAN

NOTES:

1. PRIOR TO CONSTRUCTION OF ANY INTERCEPTOR SEGMENT, THE CONTRACTOR SHALL IDENTIFY THE LOCATION, SIZE, AND ELEVATION OF ALL EXISTING WATER LINES CROSSING THE PROPOSED ALIGNMENT.
2. GRASSED AREA TO BE SODDED AND WATERED AFTER CONSTRUCTION.
3. CONTRACTOR TO REVEGETATE ALL DISTURBED AREA.
4. CONTRACTOR SHALL INSTALL ROCK BERM AT LOW POINT OF SILT FENCE.
5. SEE SHEET G-9 FOR TREE LIST TABLE.
6. THE LOCATION OF THE EXISTING ELECTRICAL VAULT IS APPROXIMATE AND SHALL BE FIELD VERIFIED. CONTRACTOR MUST PROTECT THE ELECTRICAL VAULT IN PLACE.
7. BORE PITS SHOWN FOR REPRESENTATION ONLY. FINAL DIMENSIONS SHALL BE DETERMINED BY THE CONTRACTOR.
8. ANY DAMAGE TO EXISTING LANDSCAPED PLANTS AND TREES SHALL BE REPLACED WITH NO ADDITIONAL COST TO THE OWNER.

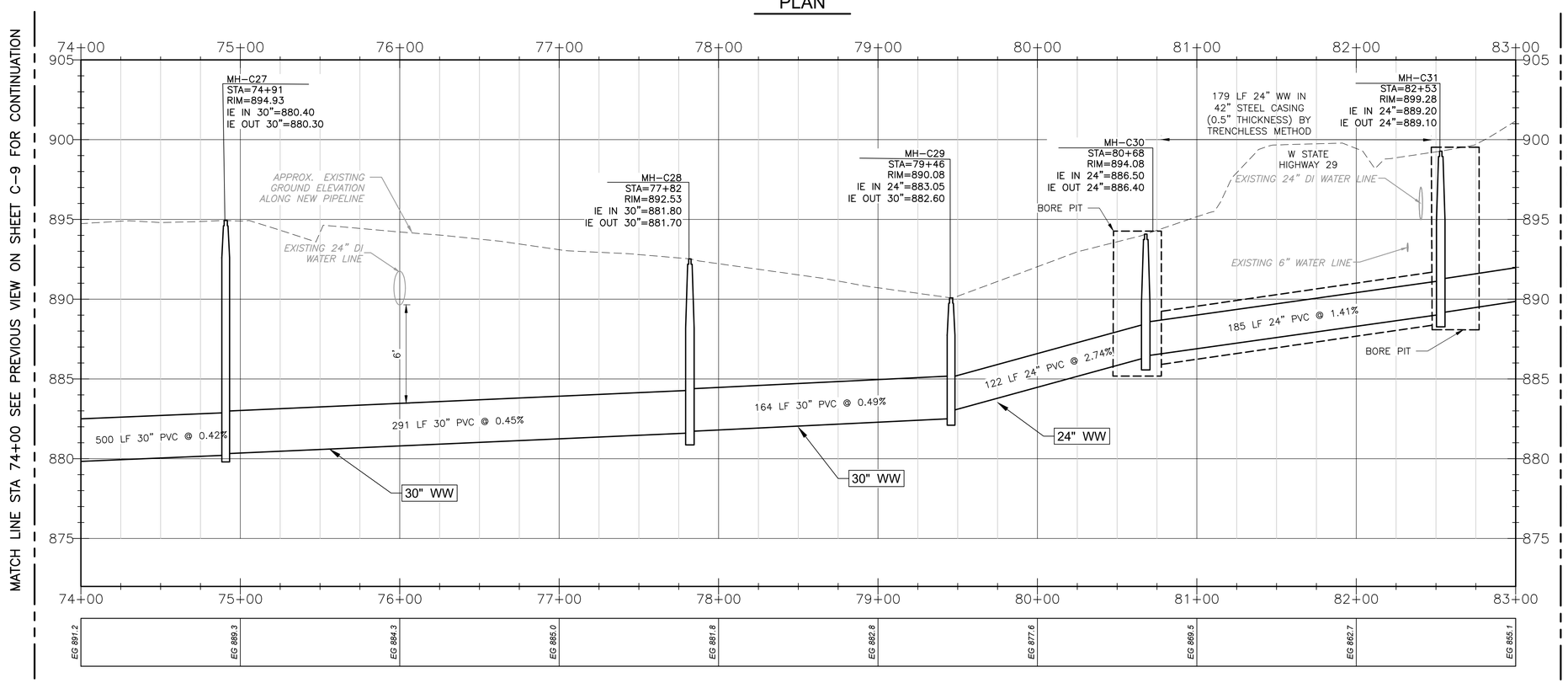

PROFILE

HORIZONTAL SCALE
1" = 40'
20 0 40

VERTICAL SCALE
1" = 4'
2 0 4

STATE OF TEXAS
GERALD S. FURRIER
129811
LICENSED
PROFESSIONAL ENGINEER
04/30/2024

REV. NO.	DATE	DRWN	CHKD	REMARKS

DESIGNED BY: A KAJALE
DRAWN BY: S MANISANKAR
SHEET CHK'D BY: ASHWIN G
CROSS CHK'D BY: A RHAMES
APPROVED BY: G FURRIER
DATE: APRIL 2024

CDM Smith
8310-1 N Capital of Texas Hwy, Suite 250
Austin, TX 78731
Tel: (512) 346-1100
TBPELS Firm Registration No. F-3043

CITY OF GEORGETOWN, TEXAS

SOUTH LAKE TO SOUTH FORK
WASTEWATER IMPROVEMENTS

BASELINE C
PLAN AND PROFILE
FROM STA 74+00 TO STA 83+00

PROJECT NO. 2048-272644
FILE NAME: C010PLPR.DWG
SHEET NO.
C-10

Plotted: 5/3/2024 1:38:23 PM

XREFs: [CDMS_2234, CEZ001SV, CEP000SS, CWP001LS, CWP003ST, CDMS-003-S Lake to SF Interceptor-TOPO-SURF, CEP005TP] Images: []
Last saved by: SAMDURAM Time: 02-05-2024 15:30:16
pw:\\cdmsmith-a202-pw.bentley.com:pw_pl1\2048\272644\04 Design Services NM_50%\02 Civil\10 BIM_CADD\C010PLPR.dwg
©2022 CDM SMITH ALL RIGHTS RESERVED.
REUSE OF DOCUMENTS: THESE DOCUMENTS AND DESIGNS PROVIDED BY PROFESSIONAL SERVICE, INCORPORATED HEREIN, ARE THE PROPERTY OF CDM SMITH AND ARE NOT TO BE USED, IN WHOLE OR PART, FOR ANY OTHER PROJECT WITHOUT THE WRITTEN AUTHORIZATION OF CDM SMITH.

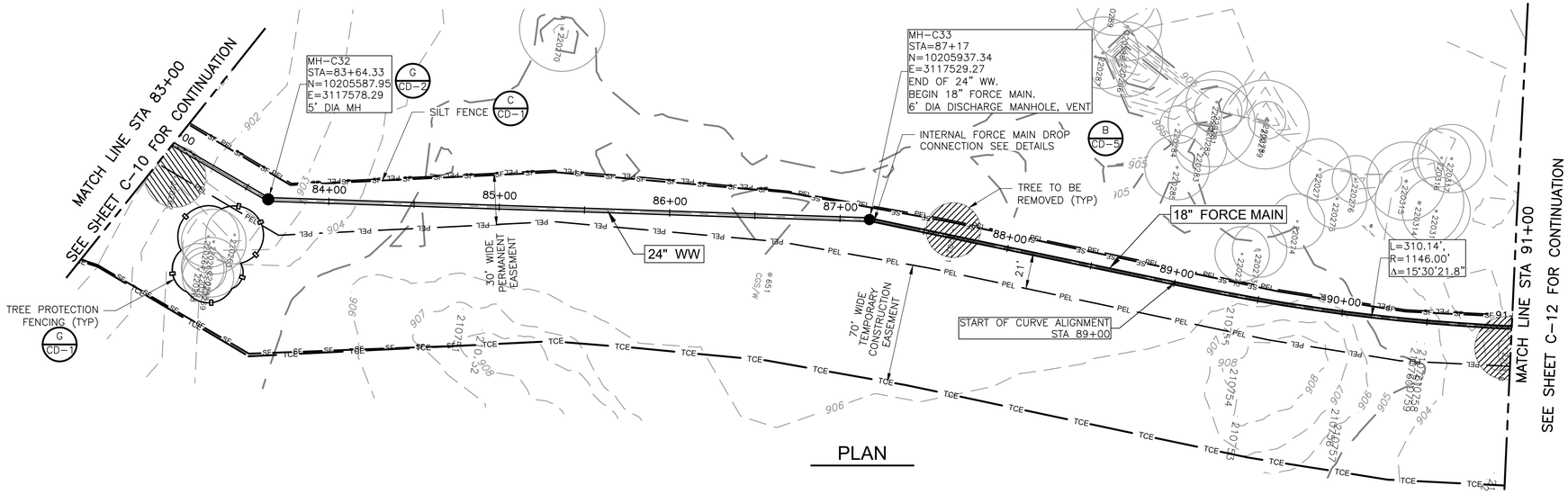

PLAN

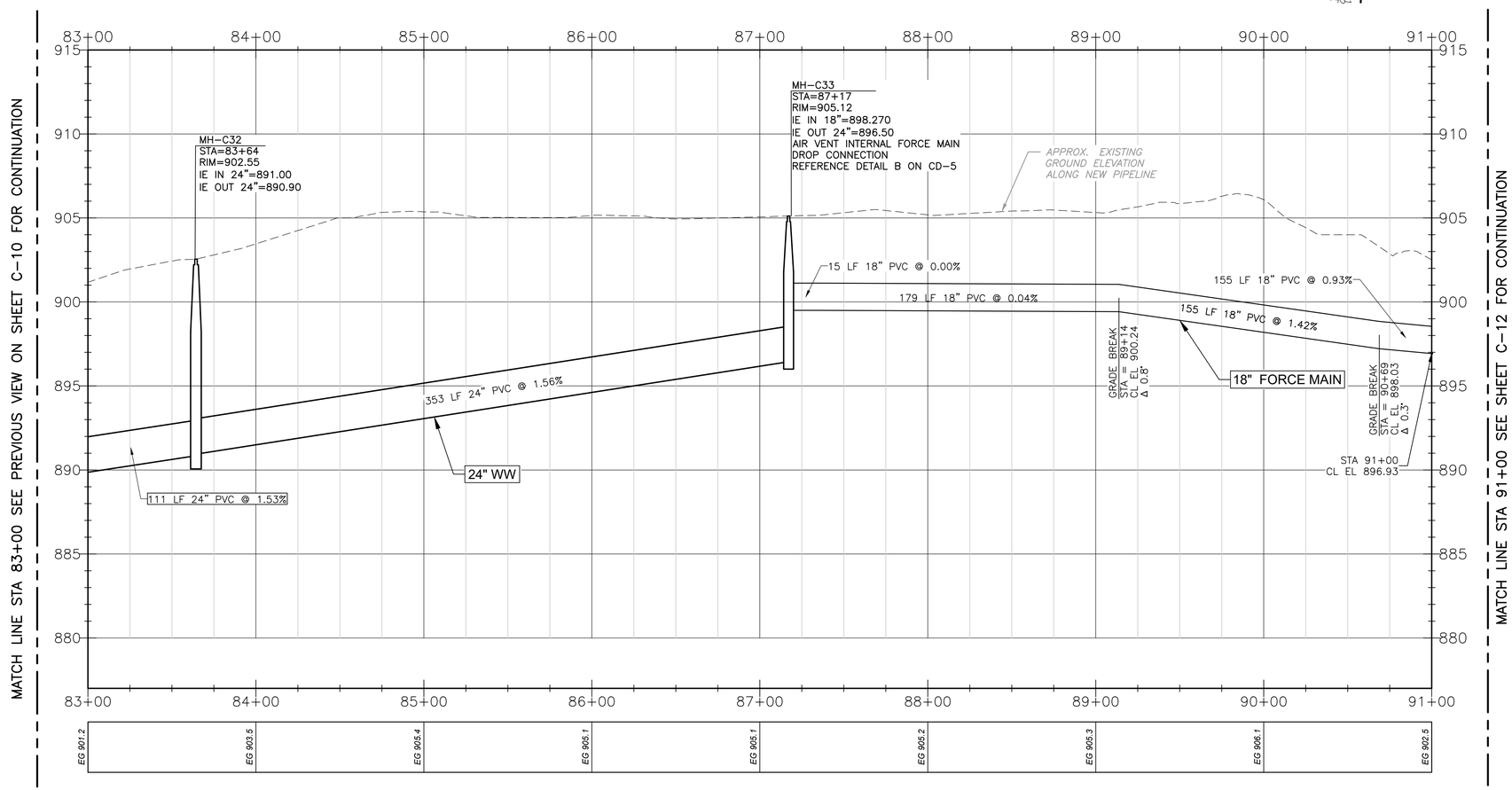

PROFILE

HORIZONTAL SCALE
1" = 40'
20 0 40

VERTICAL SCALE
1" = 4'
2 0 4

STATE OF TEXAS
GERALD S. FURRIER
129811
LICENSED
PROFESSIONAL ENGINEER
04/30/2024

REV. NO.	DATE	DRWN	CHKD	REMARKS

DESIGNED BY: A KAJALE
DRAWN BY: S MANISANKAR
SHEET CHK'D BY: ASHWIN G
CROSS CHK'D BY: A RHAMES
APPROVED BY: G FURRIER
DATE: APRIL 2024

CDM Smith
8310-1 N Capital of Texas Hwy, Suite 250
Austin, TX 78731
Tel: (512) 346-1100
TBPELS Firm Registration No. F-3043

CITY OF GEORGETOWN, TEXAS

SOUTH LAKE TO SOUTH FORK
WASTEWATER IMPROVEMENTS

BASELINE C
PLAN AND PROFILE
FROM STA 83+00 TO STA 91+00

PROJECT NO. 2048-272644
FILE NAME: C011PLPR.DWG
SHEET NO.
C-11

Plotted: 5/3/2024 8:55:51 PM

XREFs: [CEZ001SV; CVIP001YP; CEP000SS; CVIP001LS; CDMS-003-S Lake to SF Interceptor-TOPO-SURF; CDMS_2234_South_lake_to_South_fork_Border_PP; CEP005TP] Images: []
Last saved by: SAMDURAM, Time: 03-05-2024 20:53:43
pw:\\cdmsmith-sa02-pw.bentley.com:pw_pi\12048\272644\04 Design Services NM_50%\02 Civil\10 BIM_CADD\C011PLPR.dwg
© 2022 CDM SMITH ALL RIGHTS RESERVED.
REUSE OF DOCUMENTS: THESE DOCUMENTS AND DESIGNS PROVIDED BY PROFESSIONAL SERVICE, INCORPORATED HEREIN, ARE THE PROPERTY OF CDM SMITH AND ARE NOT TO BE USED, IN WHOLE OR PART, FOR ANY OTHER PROJECT WITHOUT THE WRITTEN AUTHORIZATION OF CDM SMITH.

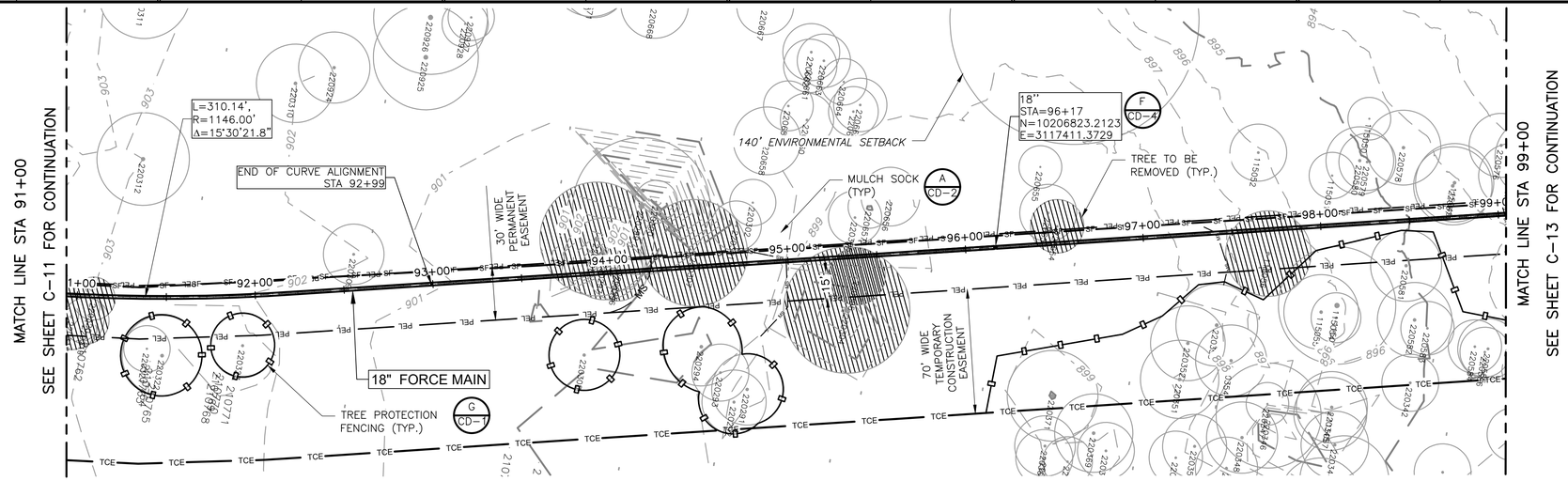

PLAN

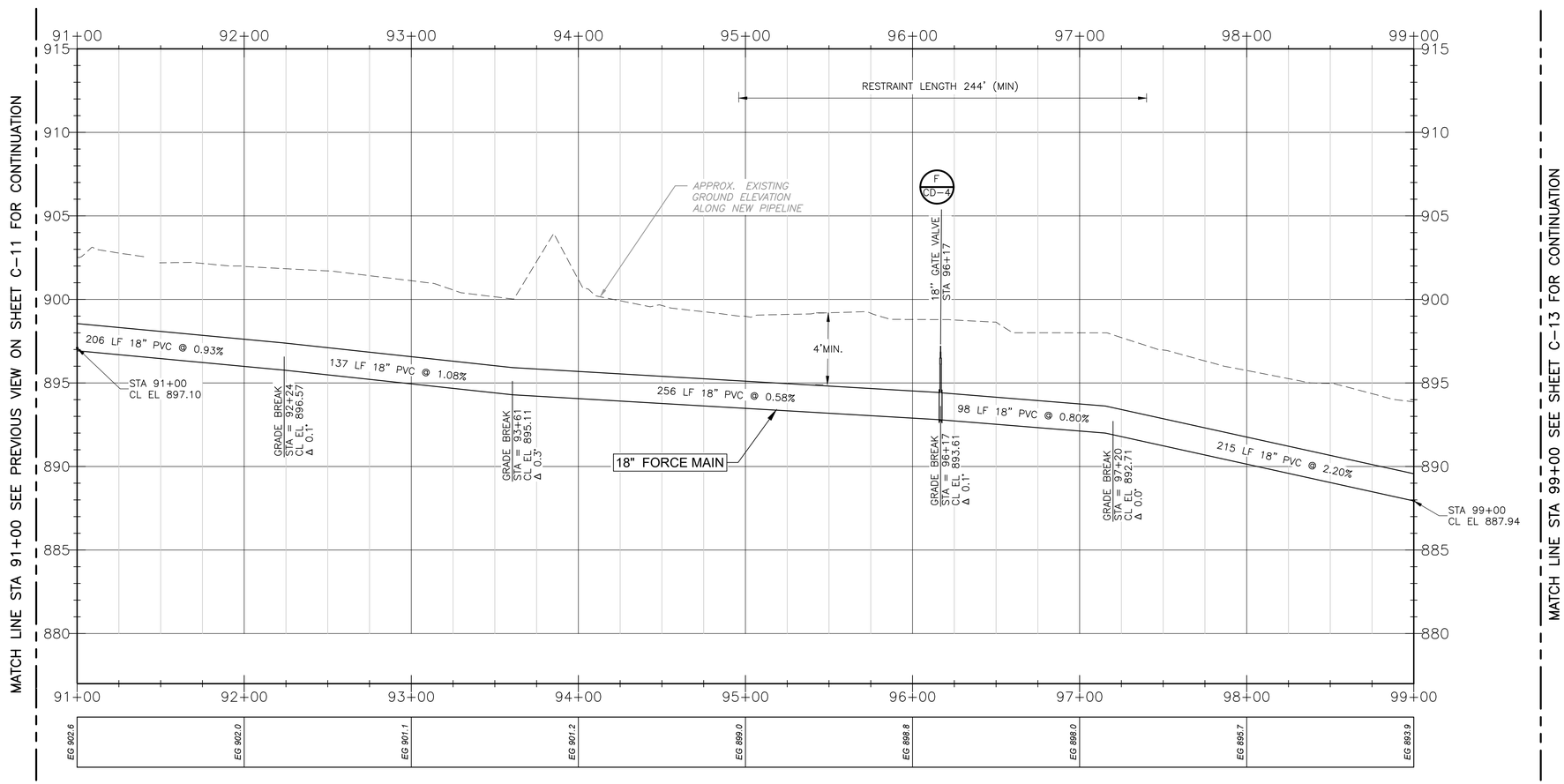

PROFILE

HORIZONTAL SCALE
1" = 40'
20 0 40

VERTICAL SCALE
1" = 4'
2 0 4

REV. NO.	DATE	DRWN	CHKD	REMARKS

DESIGNED BY: A KAJALE
DRAWN BY: S MANISANKAR
SHEET CHK'D BY: ASHWIN G
CROSS CHK'D BY: A RHAMES
APPROVED BY: G FURRIER
DATE: APRIL 2024

CDM Smith
8310-1 N Capital of Texas Hwy, Suite 250
Austin, TX 78731
Tel: (512) 346-1100
TBPELS Firm Registration No. F-3043

CITY OF GEORGETOWN, TEXAS

SOUTH LAKE TO SOUTH FORK
WASTEWATER IMPROVEMENTS

BASELINE C
PLAN AND PROFILE
FROM STA 91+00 TO STA 99+00

PROJECT NO. 2048-272644
FILE NAME: C012PLPR.DWG
SHEET NO.
C-12

Plotted: 5/3/2024 3:13:42 PM

XREFs: [CDMS_2234, CEZ001SV, CEP000SS, CWP001LS, CWP003ST, CDMS-003-S Lake to SF Interceptor-TOPO-SURF, CEP005TP] Images: []
Last saved by: LIZ2 Time: 5/3/2024 3:13:18 PM
C:\pw_pl1\liz2\d3151948\C012PLPR.dwg
©2023 CDM SMITH ALL RIGHTS RESERVED.
REUSE OF DOCUMENTS: THESE DOCUMENTS AND DESIGNS PROVIDED BY PROFESSIONAL SERVICE, INCORPORATED HEREIN, ARE THE PROPERTY OF CDM SMITH AND ARE NOT TO BE USED, IN WHOLE OR PART, FOR ANY OTHER PROJECT WITHOUT THE WRITTEN AUTHORIZATION OF CDM SMITH.

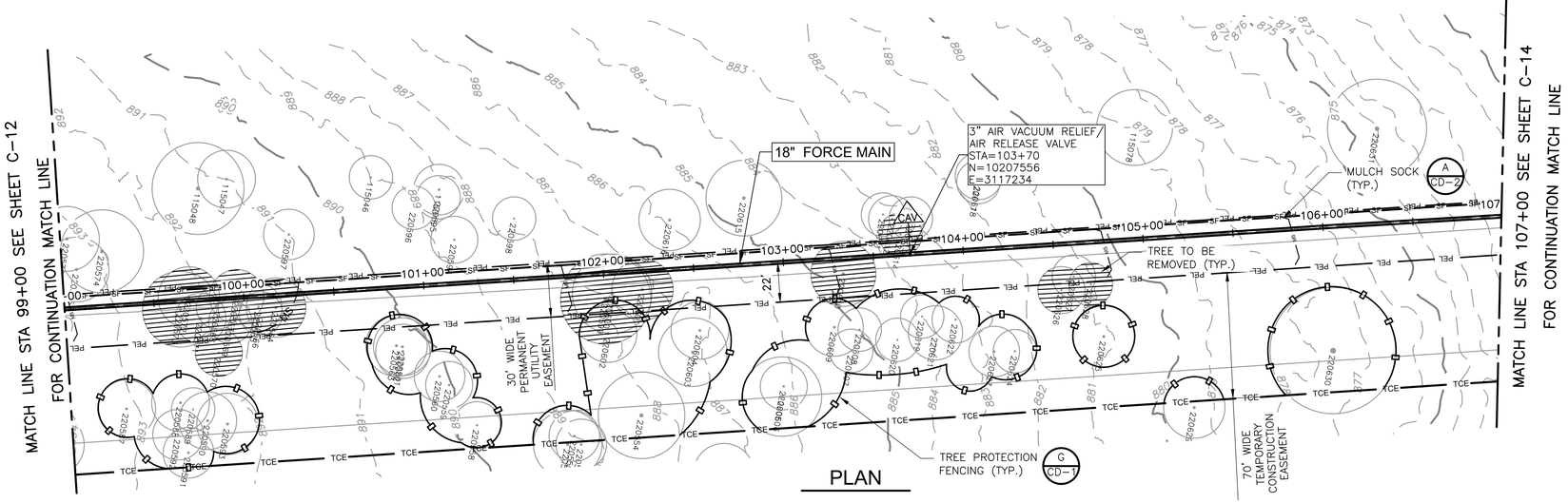

PLAN

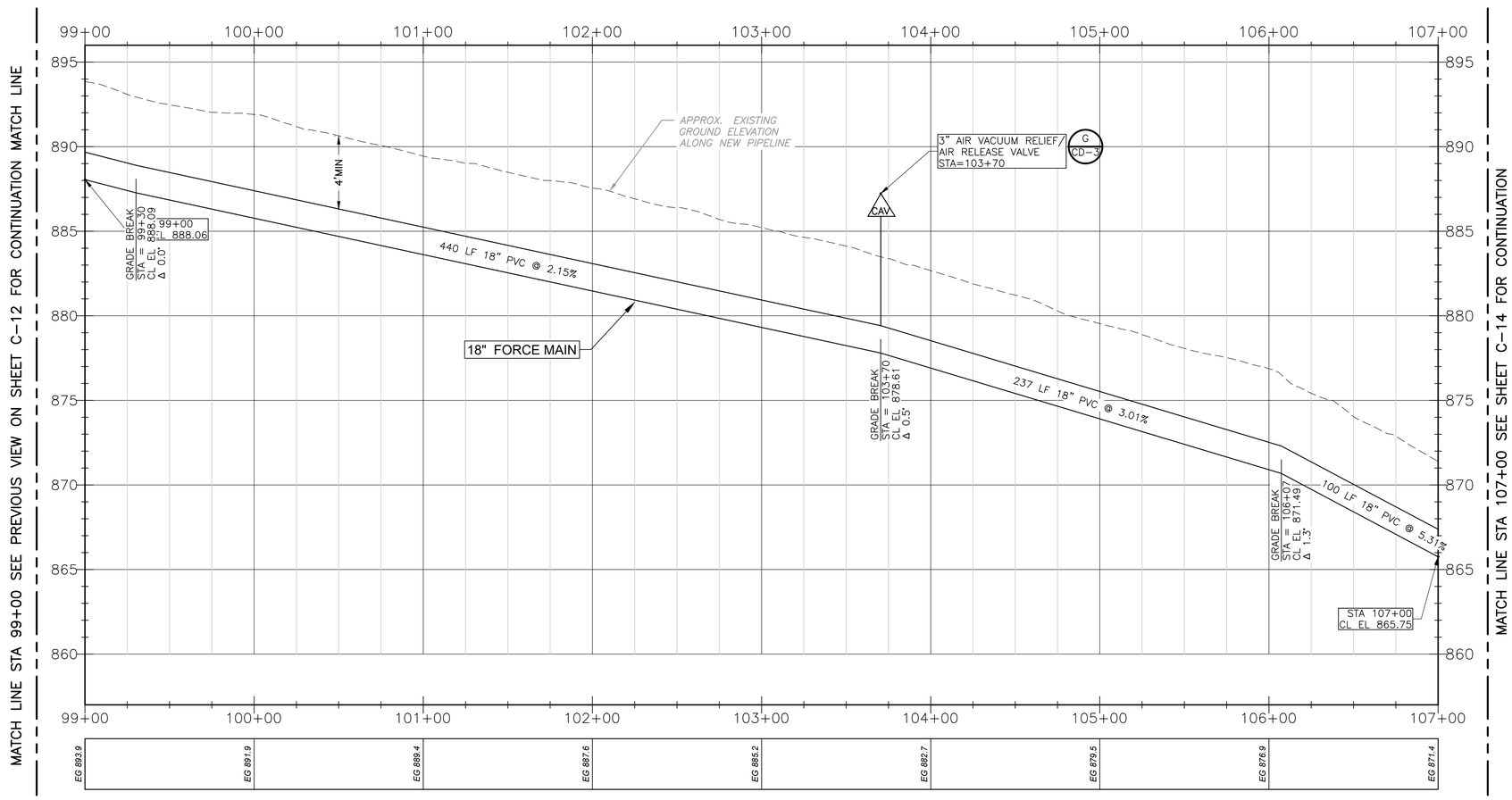

PROFILE

HORIZONTAL SCALE 1" = 40'

VERTICAL SCALE 1" = 4'

STATE OF TEXAS GERALD S. FURRIER 129811 LICENSED PROFESSIONAL ENGINEER

04/30/2024

REV. NO.	DATE	DRWN	CHKD	REMARKS

DESIGNED BY: A KAJALE
DRAWN BY: S MANISANKAR
SHEET CHK'D BY: ASHWIN G
CROSS CHK'D BY: A RHAMES
APPROVED BY: G FURRIER
DATE: APRIL 2024

CDM Smith
8310-1 N Capital of Texas Hwy, Suite 250
Austin, TX 78731
Tel: (512) 346-1100
TBPELS Firm Registration No. F-3043

CITY OF GEORGETOWN, TEXAS

SOUTH LAKE TO SOUTH FORK WASTEWATER IMPROVEMENTS

BASELINE C
PLAN AND PROFILE
FROM STA 99+00 TO STA 107+00

PROJECT NO. 2048-272644
FILE NAME: C013PLPR.DWG
SHEET NO.
C-13

Plotted: 5/3/2024 3:19:10 PM

XREFs: [CEZ001SV, CWP001LS, CWP003ST, CDMS-003-S Lake to SF Interceptor-TOPO-SURF, CDMS_2234_South_lake_to_South_fork_Border_PP, CEP005TP] Images: []
Last saved by: LIZ2 Time: 5/3/2024 3:18:55 PM
C:\pw_pl1\liz2\d3151948\C013PLPR.dwg
© 2022 CDM SMITH ALL RIGHTS RESERVED.
REUSE OF DOCUMENTS: THESE DOCUMENTS AND DESIGNS PROVIDED BY PROFESSIONAL SERVICE, INCORPORATED HEREIN, ARE THE PROPERTY OF CDM SMITH AND ARE NOT TO BE USED, IN WHOLE OR PART, FOR ANY OTHER PROJECT WITHOUT THE WRITTEN AUTHORIZATION OF CDM SMITH.

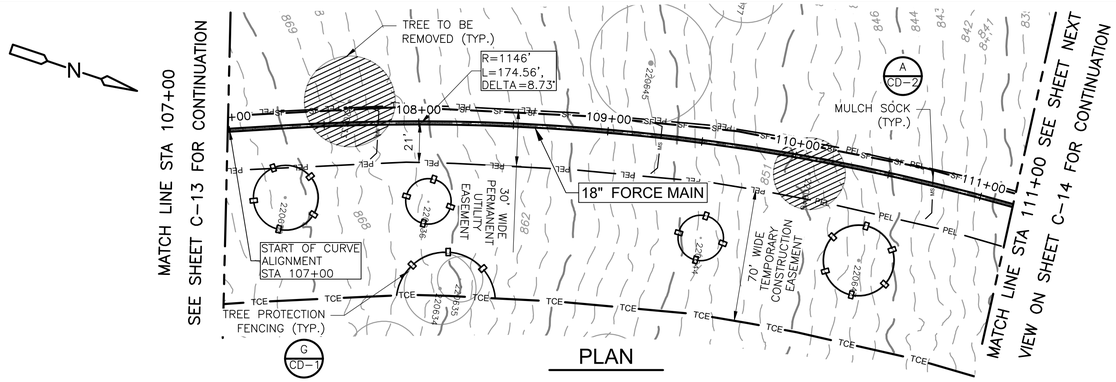

PLAN

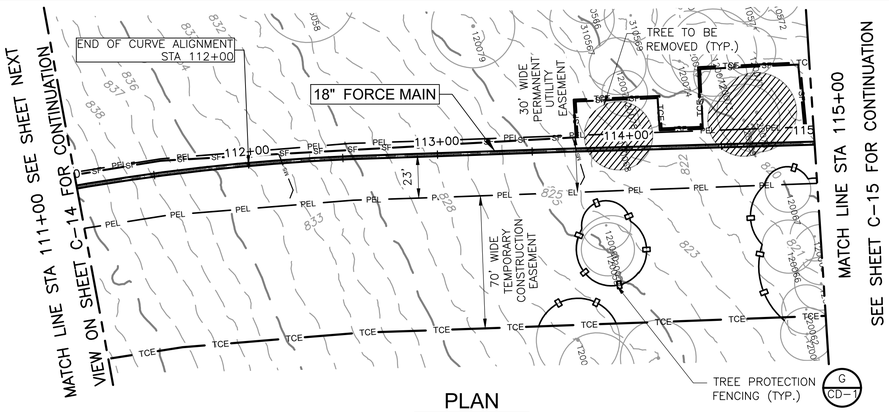

PLAN

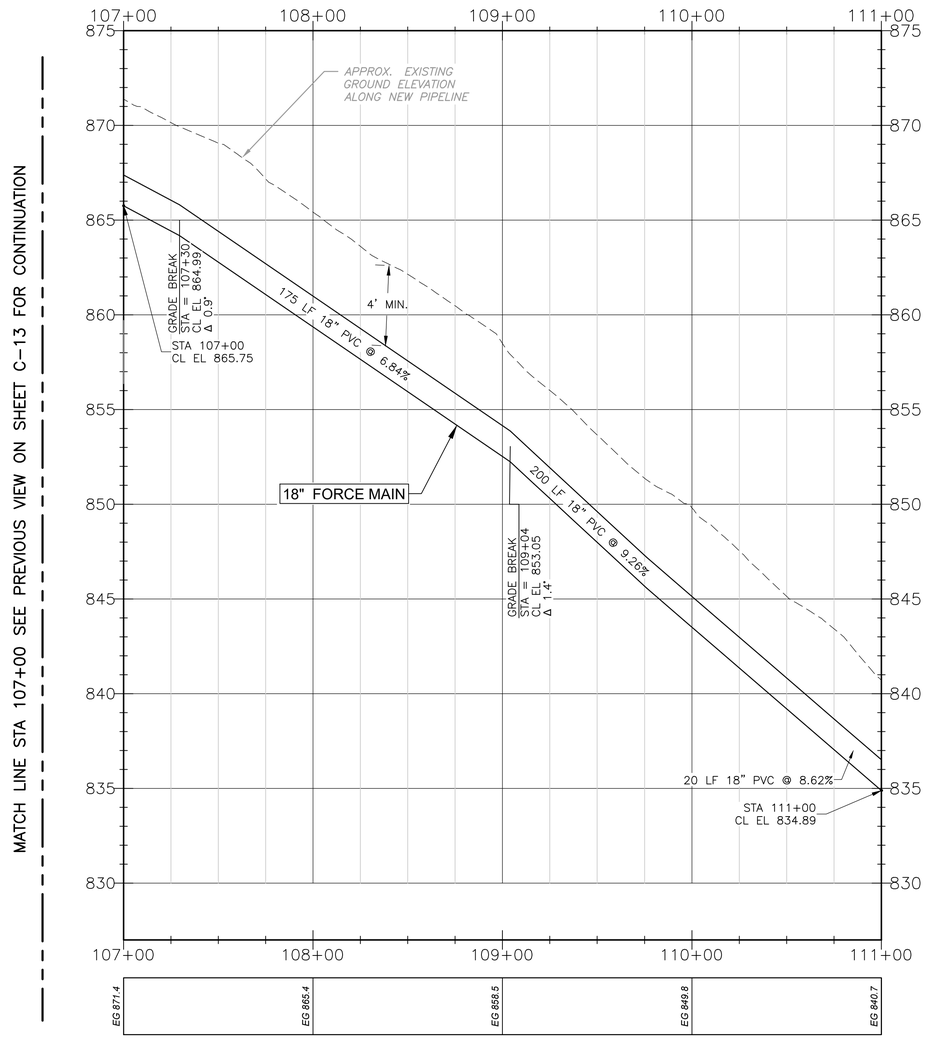

PROFILE

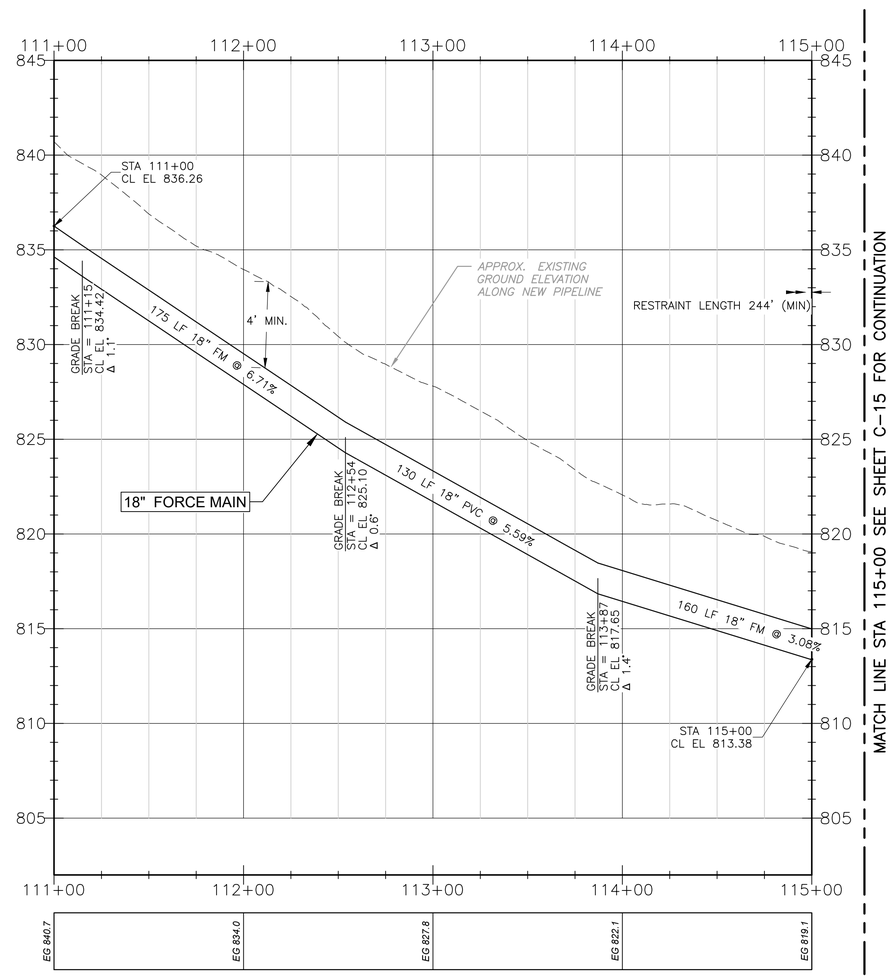

PROFILE

HORIZONTAL SCALE
1" = 40'
20 0 40

VERTICAL SCALE
1" = 4'
2 0 4

STATE OF TEXAS
GERALD S. FURRIER
129811
LICENSED
PROFESSIONAL ENGINEER
04/30/2024

REV. NO.	DATE	DRWN	CHKD	REMARKS

DESIGNED BY: A KAJALE
DRAWN BY: S MANISANKAR
SHEET CHK'D BY: ASHWIN G
CROSS CHK'D BY: A RHAMES
APPROVED BY: G FURRIER
DATE: APRIL 2024

CDM Smith
8310-1 N Capital of Texas Hwy, Suite 250
Austin, TX 78731
Tel: (512) 346-1100
TBPELS Firm Registration No. F-3043

CITY OF GEORGETOWN, TEXAS

SOUTH LAKE TO SOUTH FORK
WASTEWATER IMPROVEMENTS

BASELINE C
PLAN AND PROFILE
FROM STA 107+00 TO STA 115+00

PROJECT NO. 2048-272644
FILE NAME: C014PLPR.DWG
SHEET NO.
C-14

Plotted: 5/3/2024 3:22:18 PM

XREFs: [CDMS_2234, CEZ001SV, CWP001YP, CEP000SS, CWP001LS, CWP003ST, CDMS-003-S Lake to SF Interceptor-TOPO-SURF, CEP005TP] Images: []
Last saved by: LZ2 Time: 5/3/2024 3:21:18 PM
C:\pw_pl\\z2\d3151948\C014PLPR.dwg
© 2022 CDM SMITH ALL RIGHTS RESERVED.
REUSE OF DOCUMENTS: THESE DOCUMENTS AND DESIGNS PROVIDED BY PROFESSIONAL SERVICE, INCORPORATED HEREIN, ARE THE PROPERTY OF CDM SMITH AND ARE NOT TO BE USED, IN WHOLE OR PART, FOR ANY OTHER PROJECT WITHOUT THE WRITTEN AUTHORIZATION OF CDM SMITH.

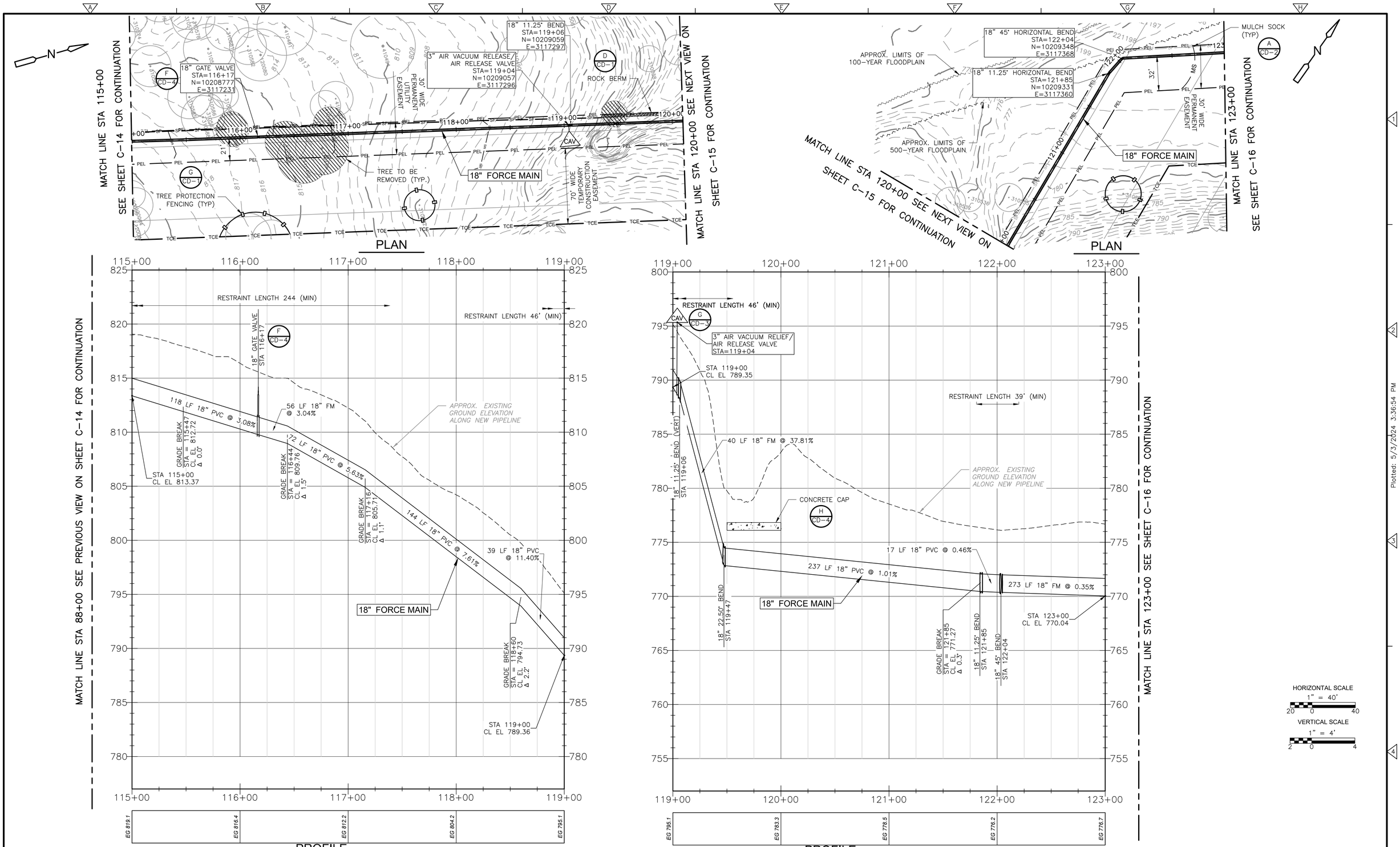

REV. NO.	DATE	DRWN	CHKD	REMARKS

DESIGNED BY: A KAJALE
DRAWN BY: S MANISANKAR
SHEET CHK'D BY: ASHWIN G
CROSS CHK'D BY: A RHAMES
APPROVED BY: G FURRIER
DATE: APRIL 2024

CDM Smith
8310-1 N Capital of Texas Hwy, Suite 250
Austin, TX 78731
Tel: (512) 346-1100
TBPELS Firm Registration No. F-3043

CITY OF GEORGETOWN, TEXAS

SOUTH LAKE TO SOUTH FORK
WASTEWATER IMPROVEMENTS

BASELINE C
PLAN AND PROFILE
FROM STA 115+00 TO STA 123+00

PROJECT NO. 2048-272644
FILE NAME: C015PLPR.DWG
SHEET NO.
C-15

Plotted: 5/3/2024 3:36:54 PM

XREFs: [CDMS_2234, CEZ001SV, CEP000SS, CWP001LS, CWP003ST, CDMS-003-S Lake to SF Interceptor-TOPO-SURF, CEP005TP] Images: []
Last saved by: LJZ2 Time: 5/3/2024 3:36:14 PM
C:\pw_pl1\ljz2\d3151948\C015PLPR.dwg
©2023 CDM SMITH ALL RIGHTS RESERVED.
REUSE OF DOCUMENTS: THESE DOCUMENTS AND DESIGNS PROVIDED BY PROFESSIONAL SERVICE, INCORPORATED HEREIN, ARE THE PROPERTY OF CDM SMITH AND ARE NOT TO BE USED, IN WHOLE OR PART, FOR ANY OTHER PROJECT WITHOUT THE WRITTEN AUTHORIZATION OF CDM SMITH.

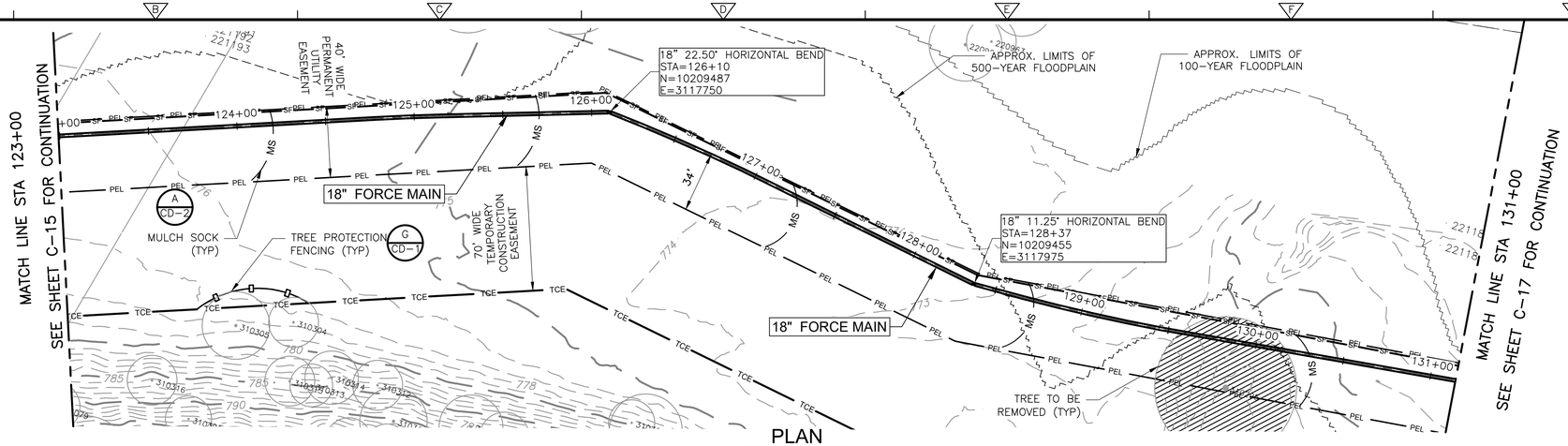

PLAN

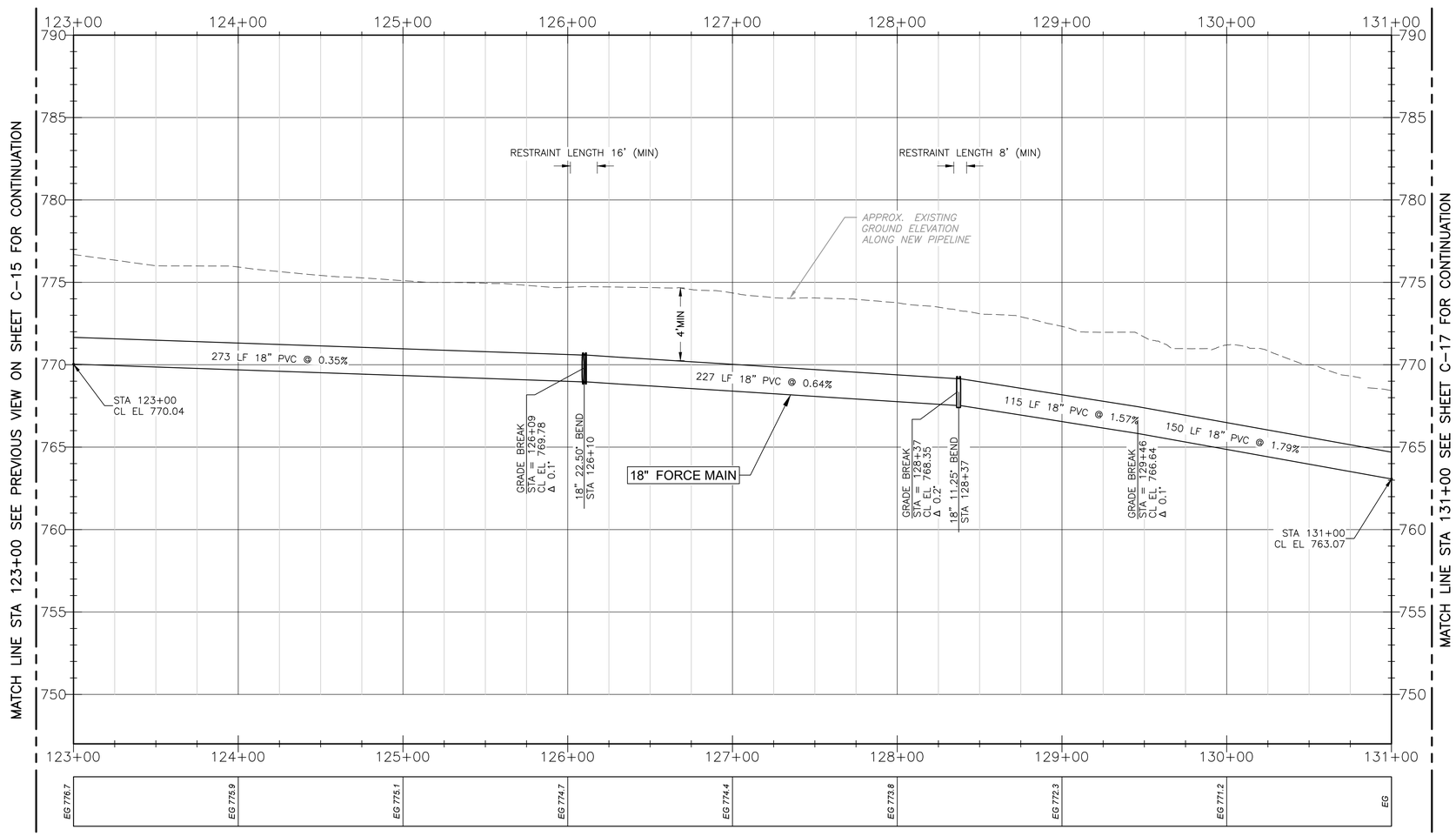

PROFILE

HORIZONTAL SCALE
1" = 40'
20 0 40

VERTICAL SCALE
1" = 4'
2 0 4

REV. NO.	DATE	DRWN	CHKD	REMARKS

DESIGNED BY: A KAJALE
DRAWN BY: S MANISANKAR
SHEET CHK'D BY: ASHWIN G
CROSS CHK'D BY: A RHAMES
APPROVED BY: G FURRIER
DATE: APRIL 2024

CDM Smith
8310-1 N Capital of Texas Hwy, Suite 250
Austin, TX 78731
Tel: (512) 346-1100
TBPELS Firm Registration No. F-3043

CITY OF GEORGETOWN, TEXAS

SOUTH LAKE TO SOUTH FORK
WASTEWATER IMPROVEMENTS

BASELINE C
PLAN AND PROFILE
FROM STA 123+00 TO STA 131+00

PROJECT NO. 2048-272644
FILE NAME: C016PLPR.DWG
SHEET NO.
C-16

90% DESIGN - NOT FOR CONSTRUCTION

XREFs: [CDMS_2234, CEZ001SV, CEP000SS, CWP001LS, CWP003ST, CDMS-003-S Lake to SF Interceptor-TOPO-SURF, CEP005TP] Images: []
Last saved by: LIZ2 Time: 5/3/2024 3:38:22 PM
C:\pw_pl1\liz2\d3151948\C016PLPR.dwg
©2023 CDM SMITH ALL RIGHTS RESERVED.
REUSE OF DOCUMENTS: THESE DOCUMENTS AND DESIGNS PROVIDED BY PROFESSIONAL SERVICE, INCORPORATED HEREIN, ARE THE PROPERTY OF CDM SMITH AND ARE NOT TO BE USED, IN WHOLE OR PART, FOR ANY OTHER PROJECT WITHOUT THE WRITTEN AUTHORIZATION OF CDM SMITH.

Plotted: 5/3/2024 3:38:47 PM

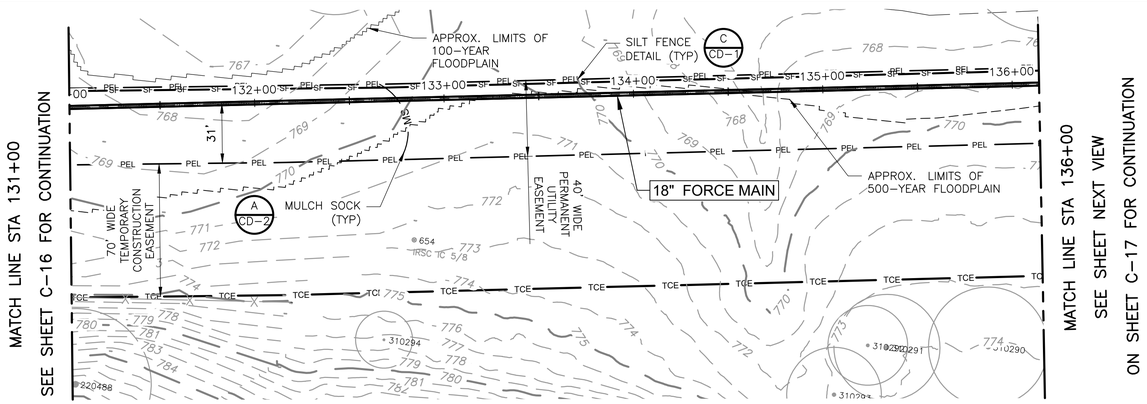

PLAN

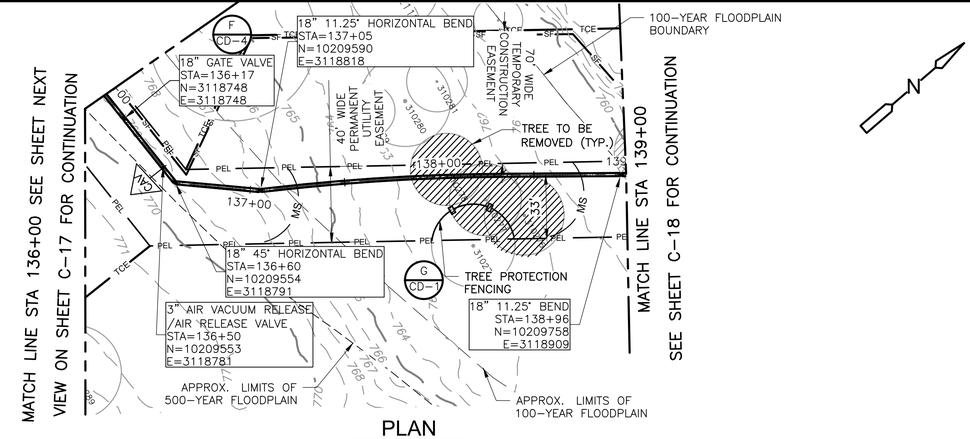

PLAN

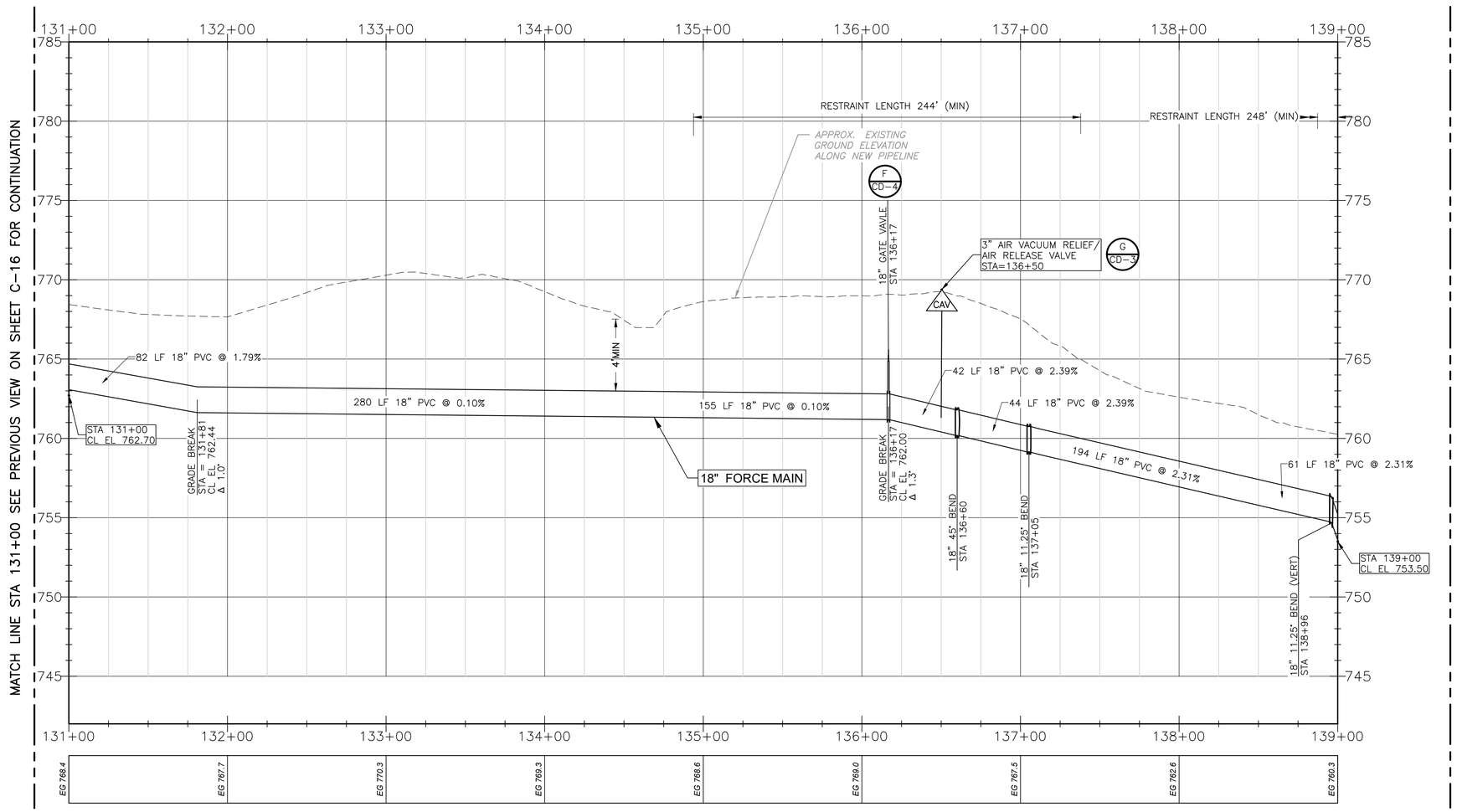

PROFILE

HORIZONTAL SCALE
1" = 40'
20 0 40

VERTICAL SCALE
1" = 4'
2 0 4

STATE OF TEXAS
GERALD S. FURRIER
129811
LICENSED PROFESSIONAL ENGINEER
04/30/2024

REV. NO.	DATE	DRWN	CHKD	REMARKS

DESIGNED BY: A KAJALE
DRAWN BY: S MANISANKAR
SHEET CHK'D BY: ASHWIN G
CROSS CHK'D BY: A RHAMES
APPROVED BY: G FURRIER
DATE: APRIL 2024

CDM Smith
8310-1 N Capital of Texas Hwy, Suite 250
Austin, TX 78731
Tel: (512) 346-1100
TBPELS Firm Registration No. F-3043

CITY OF GEORGETOWN, TEXAS

SOUTH LAKE TO SOUTH FORK
WASTEWATER IMPROVEMENTS

BASELINE C
PLAN AND PROFILE
FROM STA 131+00 TO STA 139+00

PROJECT NO. 2048-272644
FILE NAME: C017PLPR.DWG
SHEET NO.
C-17

© 2022 CDM SMITH ALL RIGHTS RESERVED.
REUSE OF DOCUMENTS: THESE DOCUMENTS AND DESIGNS PROVIDED BY PROFESSIONAL SERVICE, INCORPORATED HEREIN, ARE THE PROPERTY OF CDM SMITH AND ARE NOT TO BE USED, IN WHOLE OR PART, FOR ANY OTHER PROJECT WITHOUT THE WRITTEN AUTHORIZATION OF CDM SMITH.

XREFs: [CEZ001SV, CEP003SS, CWP001LS, CWP003ST, CDMS-003-S Lake to SF Interceptor-TOPO-SURF, CDMS_2234_South_lake_to_South_fork_Border_PP, CEP005TP] Images: []
Last saved by: LIZZ, Time: 5/3/2024 3:42:22 PM
C:\pw_pi1\lizzk3\15194\BC017PLPR.dwg
Plotted: 5/3/2024 3:42:51 PM

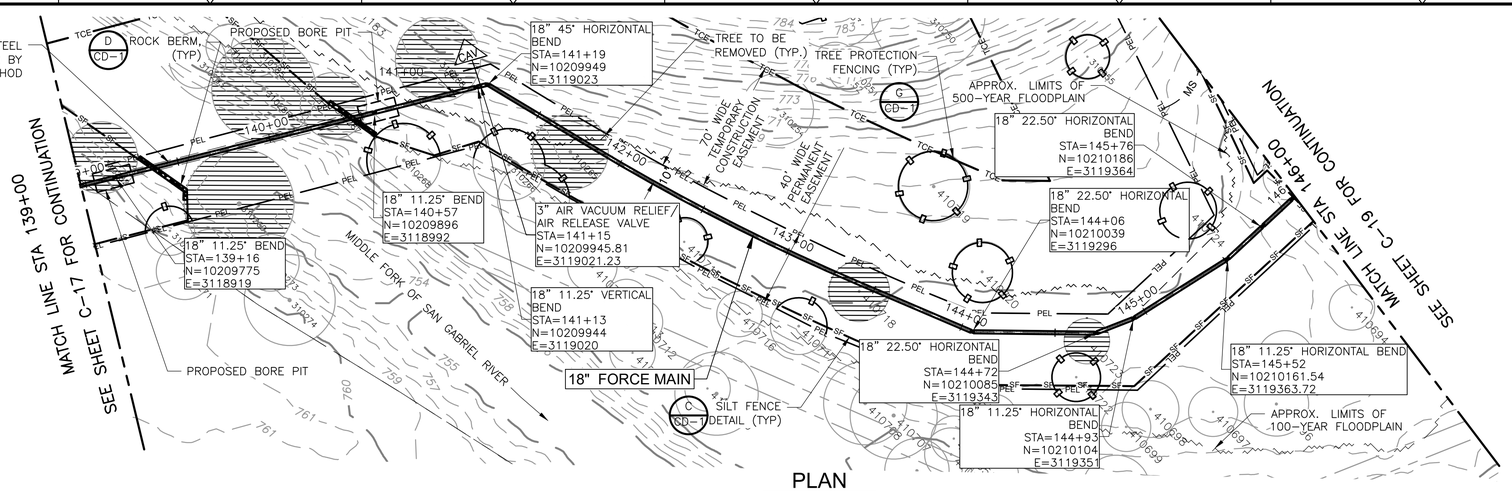

PLAN

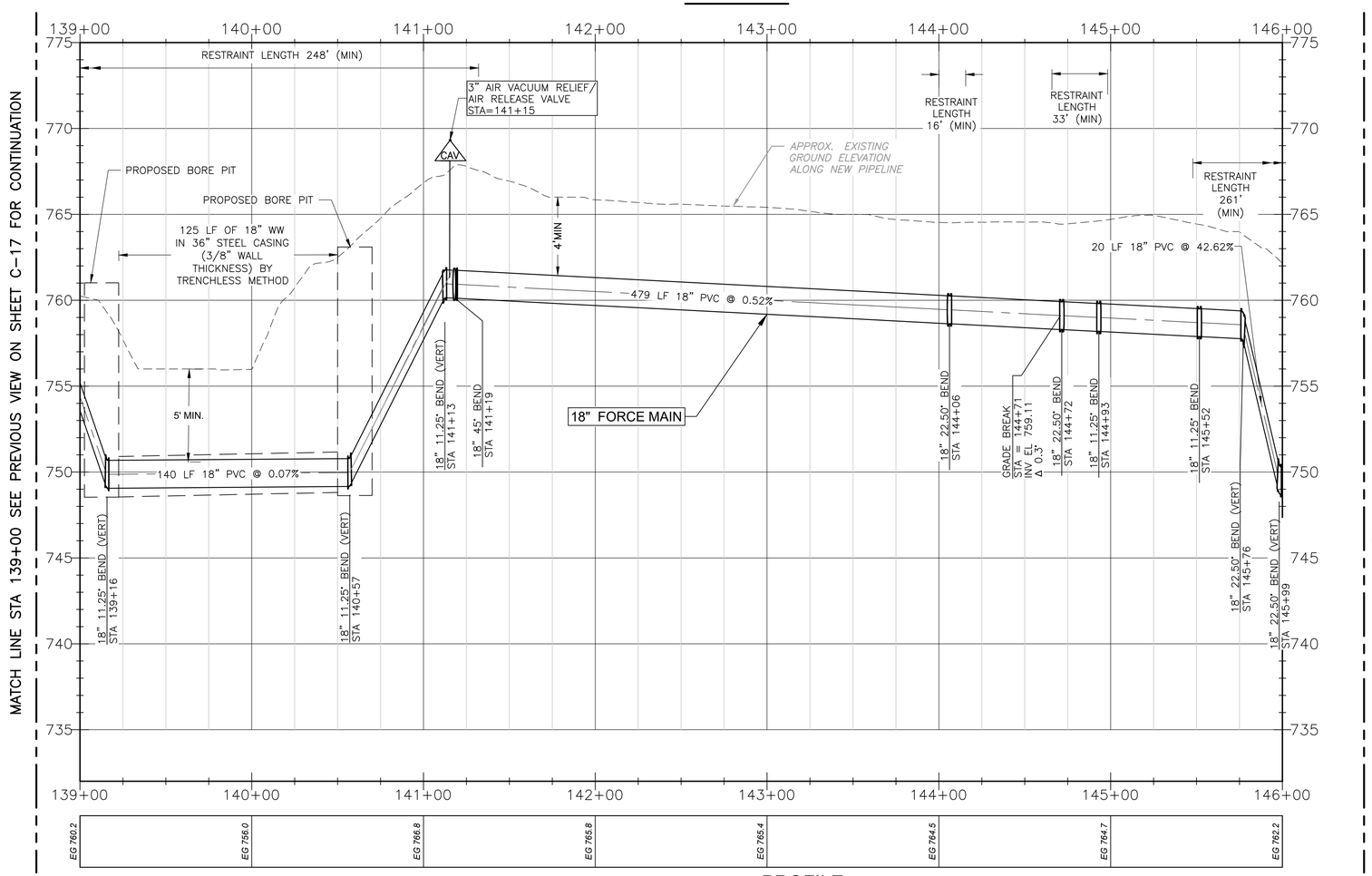

PROFILE

HORIZONTAL SCALE
1" = 40'
20 0 40

VERTICAL SCALE
1" = 4'
2 0 4

STATE OF TEXAS
GERALD S. FURRIER
129811
LICENSED
PROFESSIONAL ENGINEER
04/30/2024

REV. NO.	DATE	DRWN	CHKD	REMARKS

DESIGNED BY: A KAJALE
DRAWN BY: S.MANISANKAR
SHEET CHK'D BY: ASHWIN G
CROSS CHK'D BY: A RHAMES
APPROVED BY: G FURRIER
DATE: APRIL 2024

CDM Smith
8310-1 N Capital of Texas Hwy, Suite 250
Austin, TX 78731
Tel: (512) 346-1100
TBPELS Firm Registration No. F-3043

CITY OF GEORGETOWN, TEXAS

SOUTH LAKE TO SOUTH FORK WASTEWATER IMPROVEMENTS

BASELINE C
PLAN AND PROFILE
FROM STA 139+00 TO STA 146+00

PROJECT NO. 2048-272644
FILE NAME: C018PLPR.DWG

SHEET NO.
C-18

XREFs: [CDMS_2234, CEZ001SV, CEP000SS, CWP001LS, CWP003ST, CDMS-003-S Lake to SF Interceptor-TOPO-SURF_1, CEP005TP, CDMS-003-S Lake to SF Interceptor-TOPO-SURF] Images: []
Last saved by: KAJALEAN Time: 5/3/2024 4:15:38 PM
pw:\\admsmith-a202-pw.bentley.com:pw_pf1\2048\272644\04 Design Services NM_50%\02 Civil\10 BIM_CADD\C018PLPR.dwg
©2023 CDM SMITH ALL RIGHTS RESERVED.
REUSE OF DOCUMENTS: THESE DOCUMENTS AND DESIGNS PROVIDED BY PROFESSIONAL SERVICE, INCORPORATED HEREIN, ARE THE PROPERTY OF CDM SMITH AND ARE NOT TO BE USED, IN WHOLE OR PART, FOR ANY OTHER PROJECT WITHOUT THE WRITTEN AUTHORIZATION OF CDM SMITH.

Plotted: 5/3/2024 4:33:59 PM

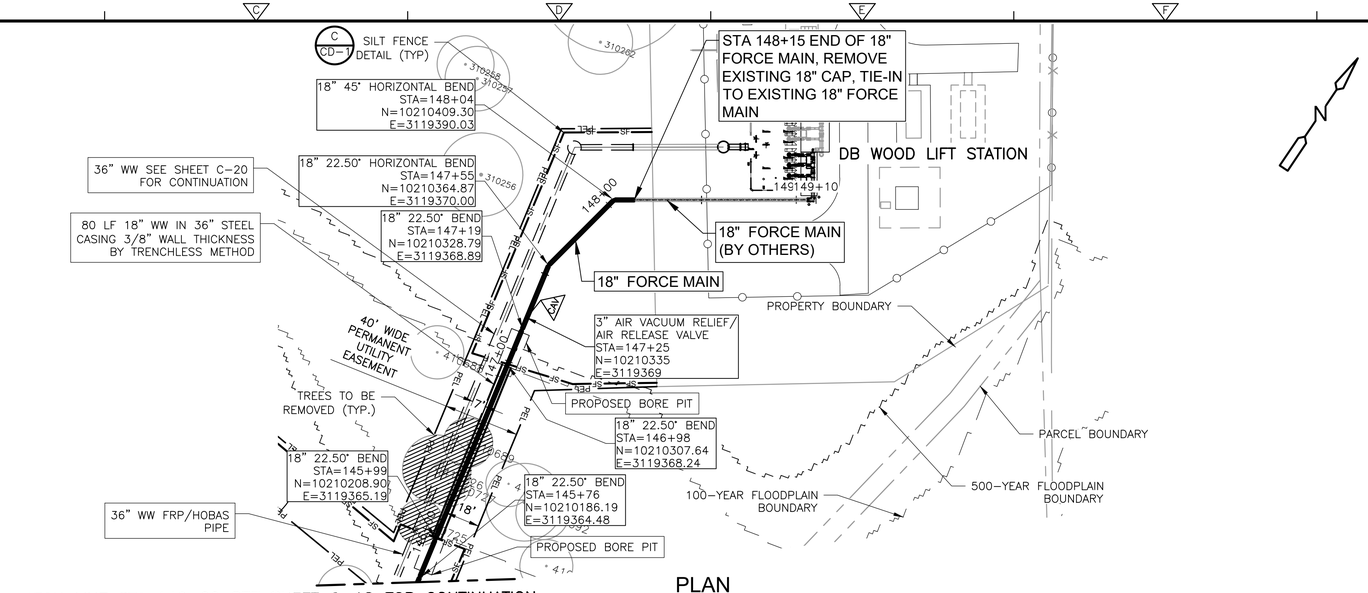

PLAN

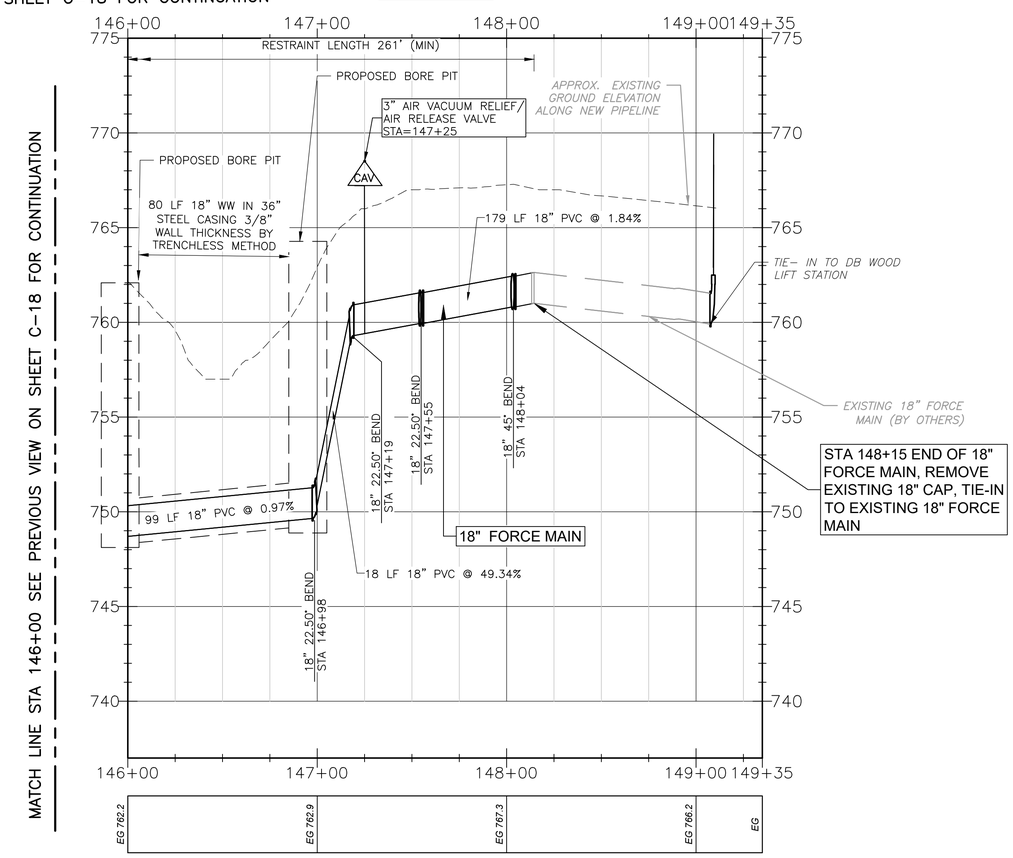

PROFILE

HORIZONTAL SCALE
1" = 40'
20 0 40

VERTICAL SCALE
1" = 4'
2 0 4

STATE OF TEXAS
GERALD S. FURRIER
129811
LICENSED
PROFESSIONAL ENGINEER

04/30/2024

REV. NO.	DATE	DRWN	CHKD	REMARKS

DESIGNED BY: A KAJALE
DRAWN BY: S MANISANKAR
SHEET CHK'D BY: ASHWIN G
CROSS CHK'D BY: A RHAMES
APPROVED BY: G FURRIER
DATE: APRIL 2024

CDM Smith
8310-1 N Capital of Texas Hwy, Suite 250
Austin, TX 78731
Tel: (512) 346-1100
TBPELS Firm Registration No. F-3043

CITY OF GEORGETOWN, TEXAS

SOUTH LAKE TO SOUTH FORK
WASTEWATER IMPROVEMENTS

BASELINE C
PLAN AND PROFILE
FROM STA 146+00 TO STA 149+35

PROJECT NO. 2048-272644
FILE NAME: C019PLPR.DWG
SHEET NO.
C-19

Plotted: 5/3/2024 3:49:38 PM

XREFs: [CEZ001SV, CEP000SS, CWP001LS, CWP003ST, CWP002LS, MWP002LS, CDMS-003-S Lake to SF Interceptor-TOPO-SURF, CDMS_2234_South_lake_to_South_fork_Border_PP, CEP005TP] Images: []
Last saved by: LIZ2 Time: 5/3/2024 3:49:11 PM
C:\pw_pl\liz2\d3151948\C019PLPR.dwg

© 2022 CDM SMITH ALL RIGHTS RESERVED.
REUSE OF DOCUMENTS: THESE DOCUMENTS AND DESIGNS PROVIDED BY PROFESSIONAL SERVICE, INCORPORATED HEREIN, ARE THE PROPERTY OF CDM SMITH AND ARE NOT TO BE USED, IN WHOLE OR PART, FOR ANY OTHER PROJECT WITHOUT THE WRITTEN AUTHORIZATION OF CDM SMITH.

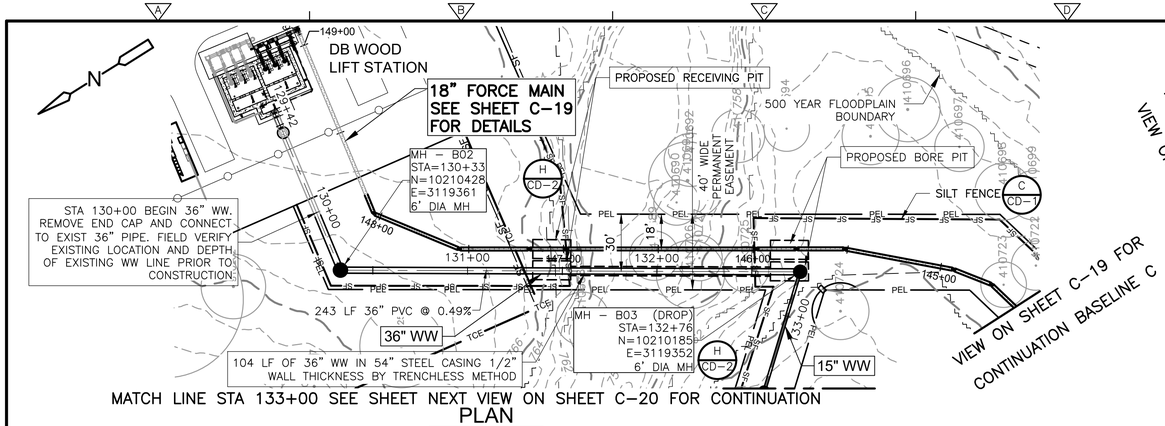

PLAN

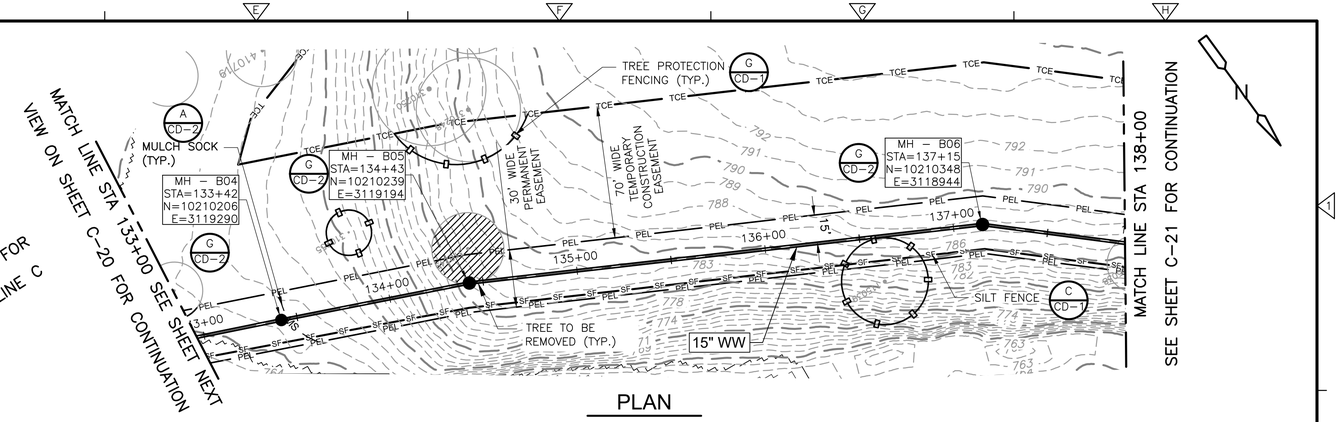

PLAN

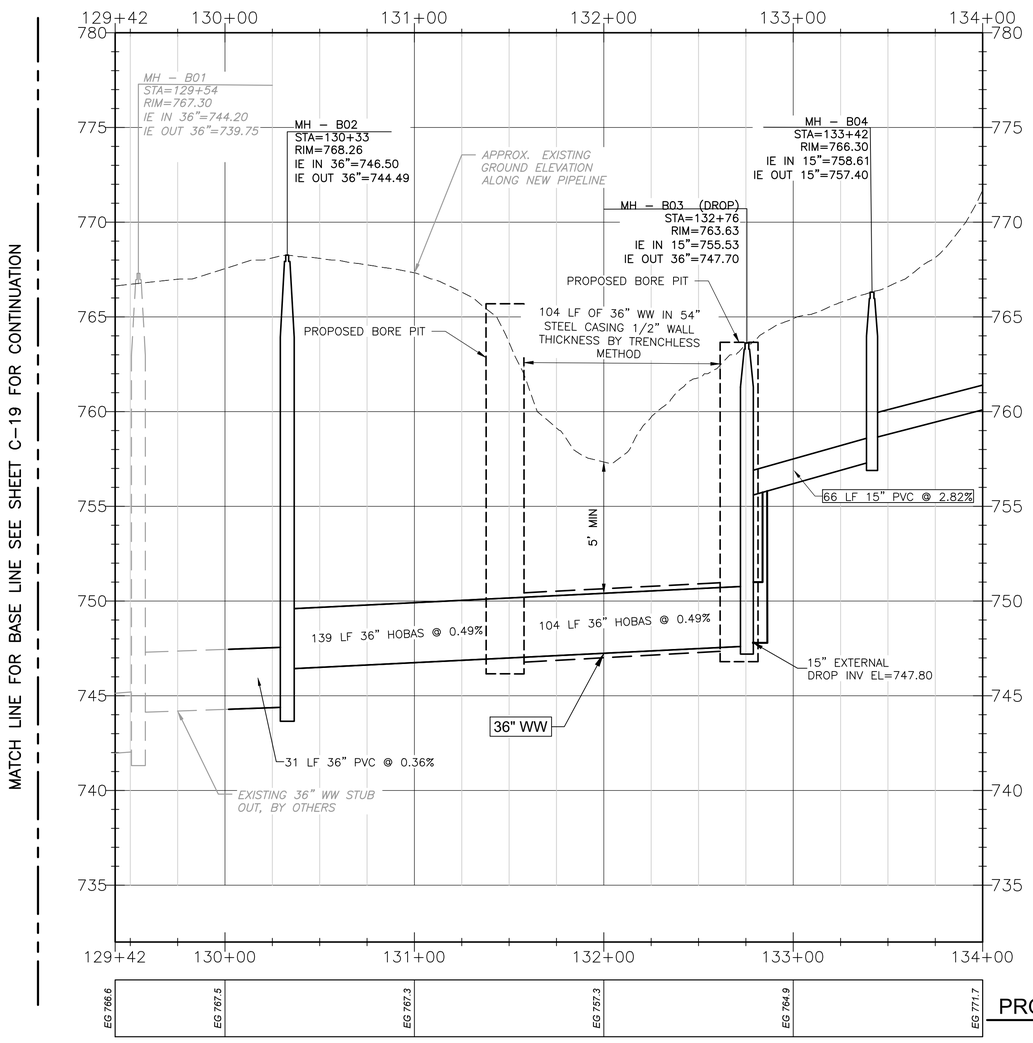

PROFILE

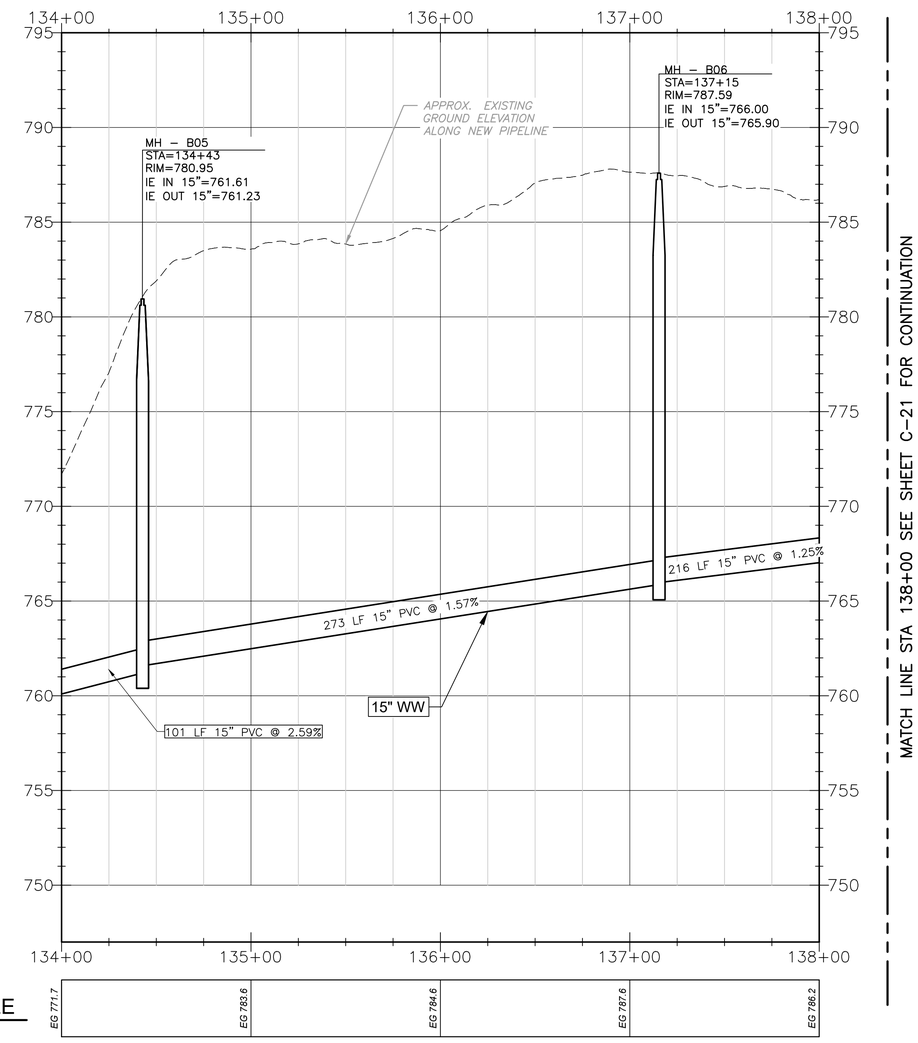

HORIZONTAL SCALE
1" = 40'
20 0 40

VERTICAL SCALE
1" = 4'
2 0 4

STATE OF TEXAS
GERALD S. FURRIER
129811
LICENSED
PROFESSIONAL ENGINEER
04/30/2024

REV. NO.	DATE	DRWN	CHKD	REMARKS

DESIGNED BY: A KAJALE
DRAWN BY: S MANISANKAR
SHEET CHK'D BY: ASHWIN G
CROSS CHK'D BY: A RHAMES
APPROVED BY: G FURRIER
DATE: APRIL 2024

CDM Smith
8310-1 N Capital of Texas Hwy, Suite 250
Austin, TX 78731
Tel: (512) 346-1100
TBPELS Firm Registration No. F-3043

CITY OF GEORGETOWN, TEXAS

SOUTH LAKE TO SOUTH FORK
WASTEWATER IMPROVEMENTS

BASELINE B
PLAN AND PROFILE
FROM STA 130+00 TO STA 138+00

PROJECT NO. 2048-272644
FILE NAME: C020PLPR.DWG

SHEET NO.
C-20

Plotted: 5/6/2024 5:20:22 PM

XREFs: [CEZ001SV, CVP003ST, CEP000SS, CVP001LS, SWP002LS, CWP002LS, CDMS-003-S Lake to SF Interceptor-TOPO-SURF_1, CDMS_2234_South_lake_to_South_fork_Border_PP, CDMS-003-S Lake to SF Interceptor-TOPO-SURF, CEP006TP] Images: []
Last saved by: SAMEDURAIM, Time: 06-05-2024 17:19:18
pw:\\cdmsmith-ad02-pw.bentley.com:pw_pw1\12048\272644\04 Design Services NM_50%\02 Civil\10 BIM_CADD\C020PLPR.dwg
© 2022 CDM SMITH ALL RIGHTS RESERVED.
REUSE OF DOCUMENTS: THESE DOCUMENTS AND DESIGNS PROVIDED BY PROFESSIONAL SERVICE, INCORPORATED HEREIN, ARE THE PROPERTY OF CDM SMITH AND ARE NOT TO BE USED, IN WHOLE OR PART, FOR ANY OTHER PROJECT WITHOUT THE WRITTEN AUTHORIZATION OF CDM SMITH.

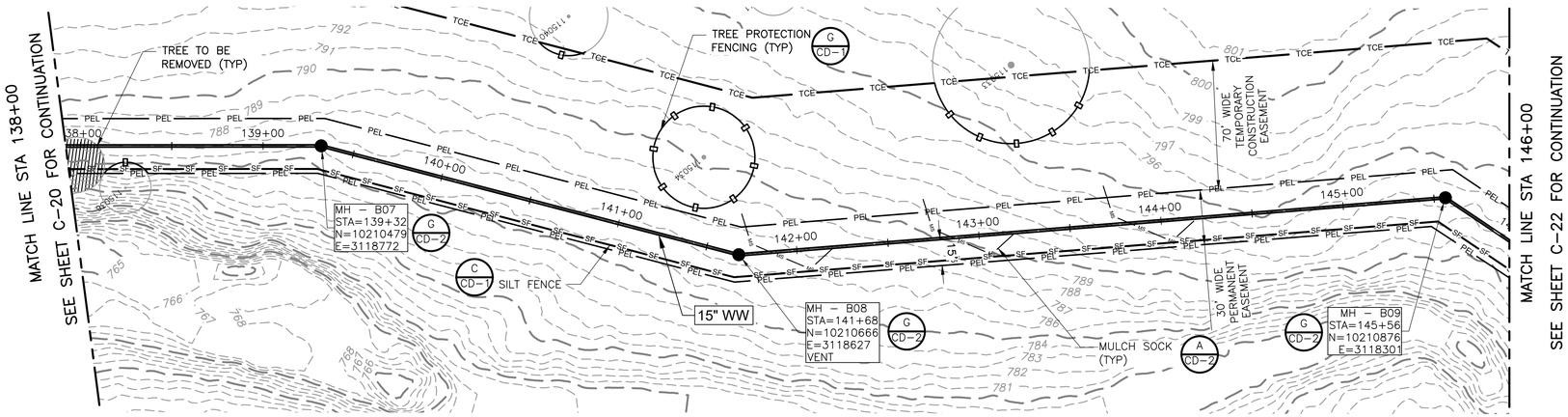

PLAN

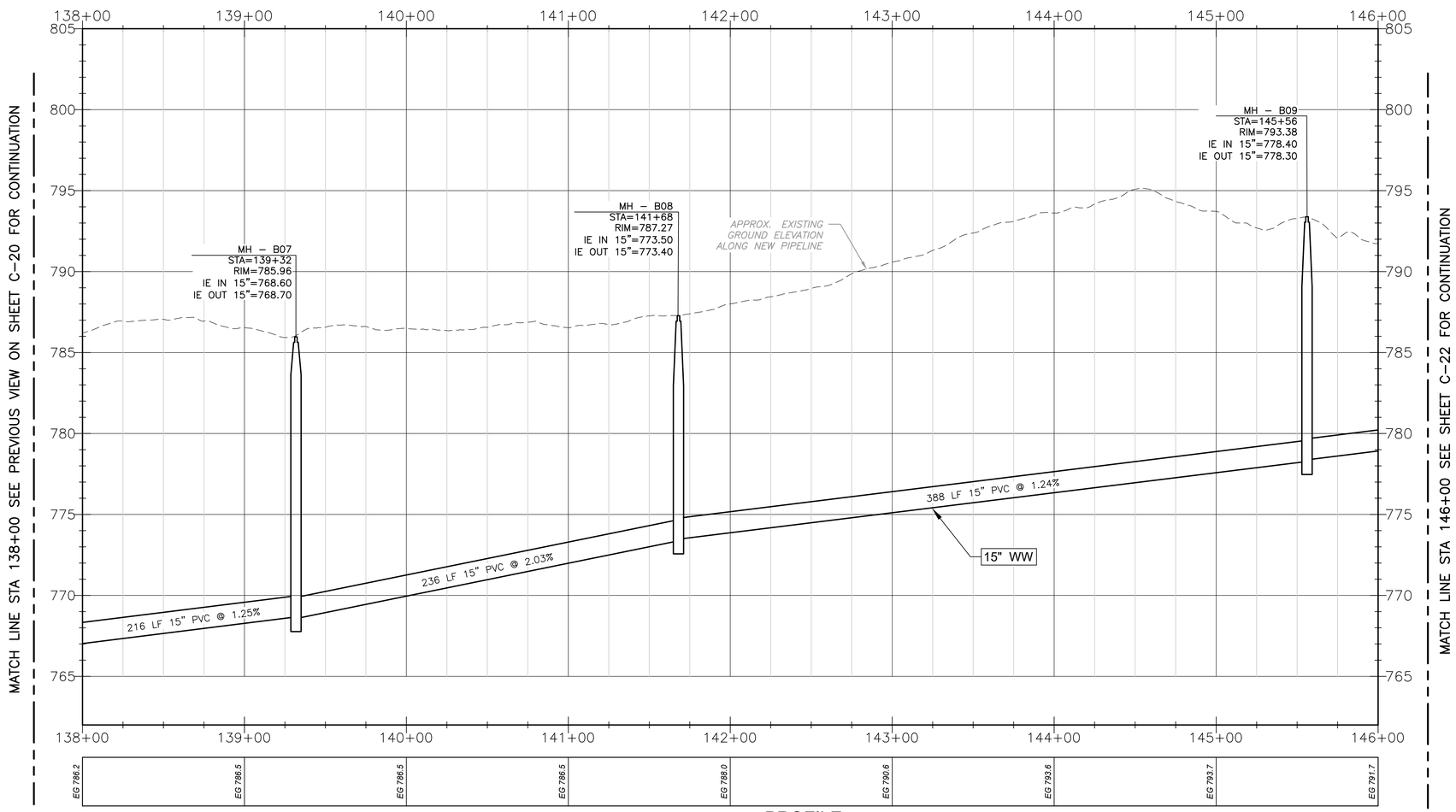

PROFILE

HORIZONTAL SCALE
1" = 40'
20 0 40

VERTICAL SCALE
1" = 4'
2 0 4

STATE OF TEXAS
GERALD S. FURRIER
129811
LICENSED
PROFESSIONAL ENGINEER
04/30/2024

REV. NO.	DATE	DRWN	CHKD	REMARKS

DESIGNED BY: A KAJALE
DRAWN BY: S MANISANKAR
SHEET CHK'D BY: ASHWIN G
CROSS CHK'D BY: A RHAMES
APPROVED BY: G FURRIER
DATE: APRIL 2024

CDM Smith
8310-1 N Capital of Texas Hwy, Suite 250
Austin, TX 78731
Tel: (512) 346-1100
TBPELS Firm Registration No. F-3043

CITY OF GEORGETOWN, TEXAS

SOUTH LAKE TO SOUTH FORK
WASTEWATER IMPROVEMENTS

BASELINE B
PLAN AND PROFILE
FROM STA 138+00 TO STA 146+00

PROJECT NO. 2048-272644
FILE NAME: C021PLPR.DWG

SHEET NO.
C-21

Plotted: 5/3/2024 11:51:43 AM

XREFs: [CEZ001SV, CVP003ST, CEP000SS, CVP001LS, CDMS-003-S Lake to SF Interceptor-TOPO-SURF, CDMS_2234_South_lake_to_South_fork_Border_PP, CEP005TP] Images: []
Last saved by: LIZ2 Time: 5/3/2024 11:50:22 AM
C:\pw_pt1\liz2\d3151946\C021PLPR.dwg
© 2022 CDM SMITH ALL RIGHTS RESERVED.
REUSE OF DOCUMENTS: THESE DOCUMENTS AND DESIGNS PROVIDED BY PROFESSIONAL SERVICE, INCORPORATED HEREIN, ARE THE PROPERTY OF CDM SMITH AND ARE NOT TO BE USED, IN WHOLE OR PART, FOR ANY OTHER PROJECT WITHOUT THE WRITTEN AUTHORIZATION OF CDM SMITH.

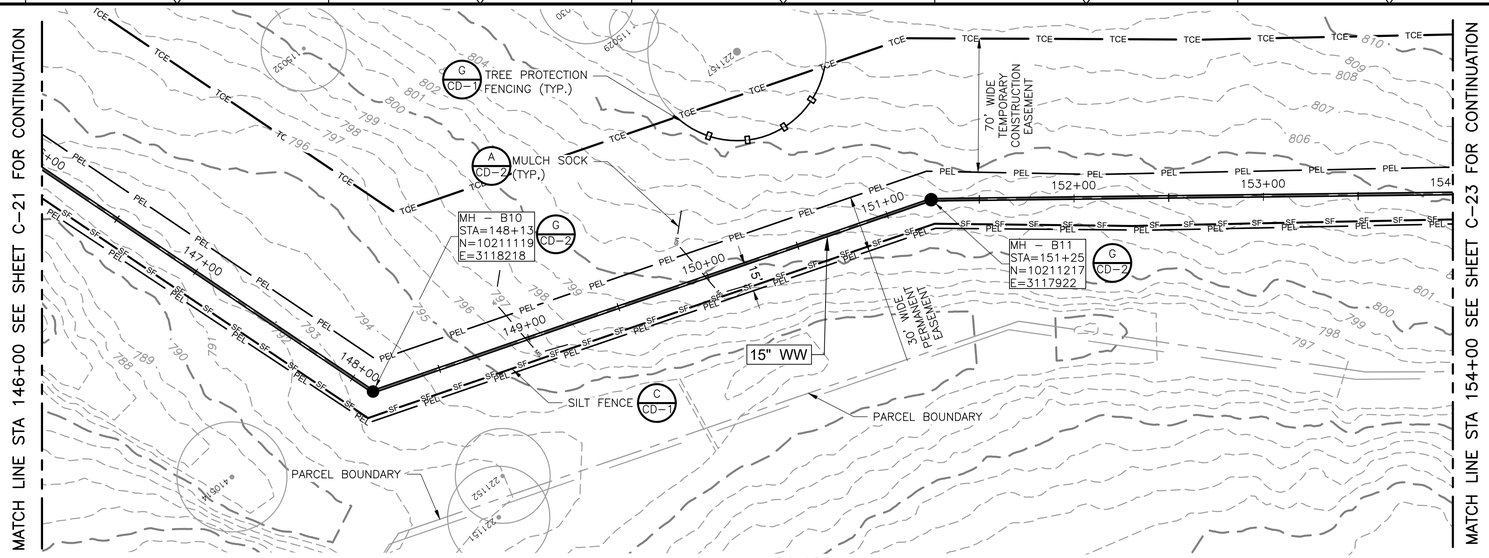

PLAN

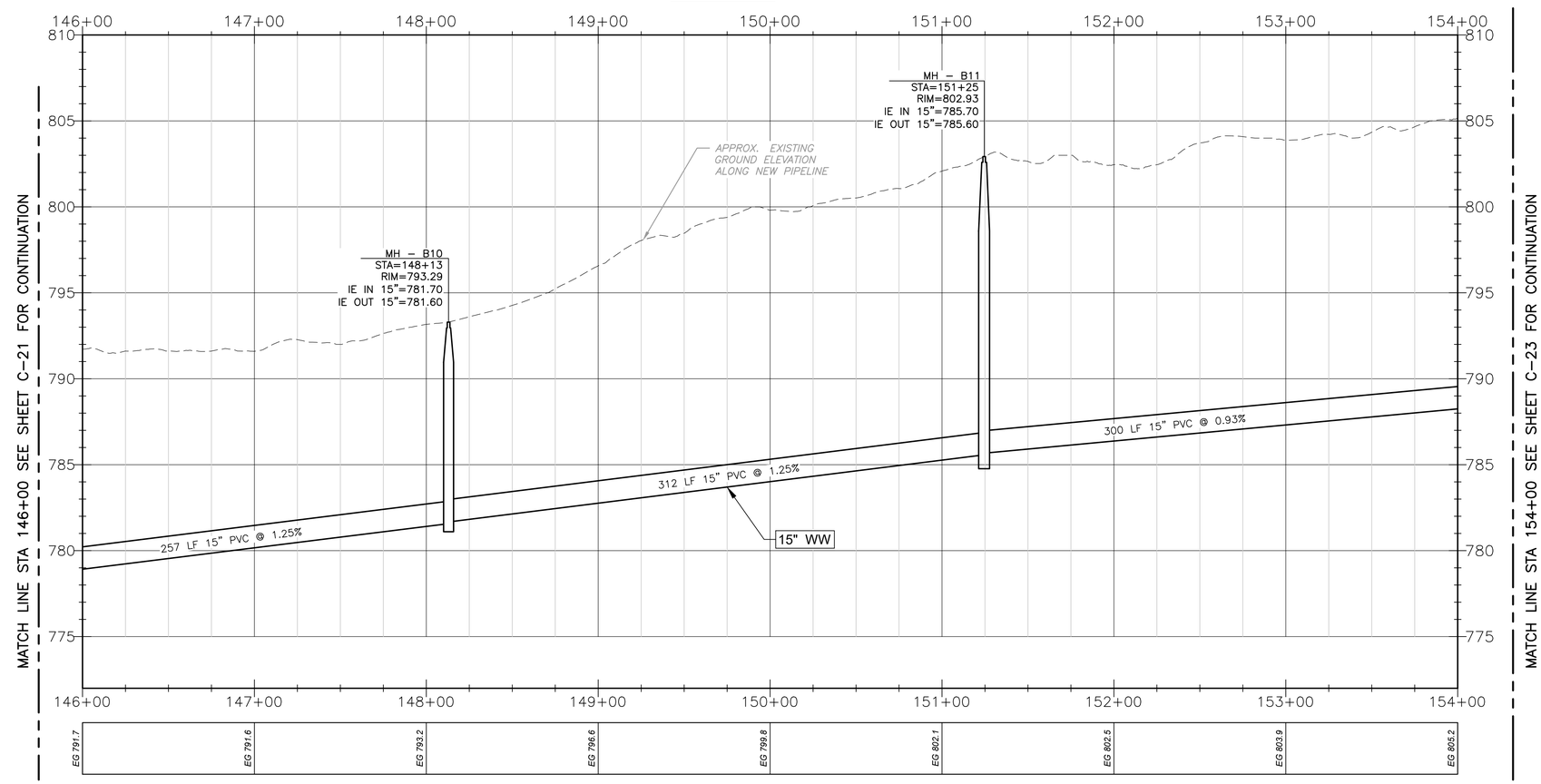

PROFILE

HORIZONTAL SCALE
1" = 40'
20 0 40

VERTICAL SCALE
1" = 4'
2 0 4

STATE OF TEXAS
GERALD S. FURRIER
129811
LICENSED
PROFESSIONAL ENGINEER
04/30/2024

REV. NO.	DATE	DRWN	CHKD	REMARKS

DESIGNED BY: A KAJALE
DRAWN BY: S MANISANKAR
SHEET CHK'D BY: ASHWIN G
CROSS CHK'D BY: A RHAMES
APPROVED BY: G FURRIER
DATE: APRIL 2024

CDM Smith
8310-1 N Capital of Texas Hwy, Suite 250
Austin, TX 78731
Tel: (512) 346-1100
TBPELS Firm Registration No. F-3043

CITY OF GEORGETOWN, TEXAS

SOUTH LAKE TO SOUTH FORK
WASTEWATER IMPROVEMENTS

BASELINE B
PLAN AND PROFILE
FROM STA 146+00 TO STA 154+00

PROJECT NO. 2048-272644
FILE NAME: C022PLPR.DWG

SHEET NO.
C-22

Plotted: 5/3/2024 11:53:31 AM

XREFs: [CDMS_2234_South_lake_to_South_fork_Border_PP, CEZ001SV, CWP003ST, CEP000SS, CWP001LS, CDMS-003-S Lake to SF Interceptor-TOPO-SURF, CEP005TP] Images: []
Last saved by: LZ2 Time: 5/3/2024 11:53:06 AM
C:\pw_pt\lz2cd3151948\C022PLPR.dwg

© 2022 CDM SMITH ALL RIGHTS RESERVED.
REUSE OF DOCUMENTS: THESE DOCUMENTS AND DESIGNS PROVIDED BY PROFESSIONAL SERVICE, INCORPORATED HEREIN, ARE THE PROPERTY OF CDM SMITH AND ARE NOT TO BE USED, IN WHOLE OR PART, FOR ANY OTHER PROJECT WITHOUT THE WRITTEN AUTHORIZATION OF CDM SMITH.

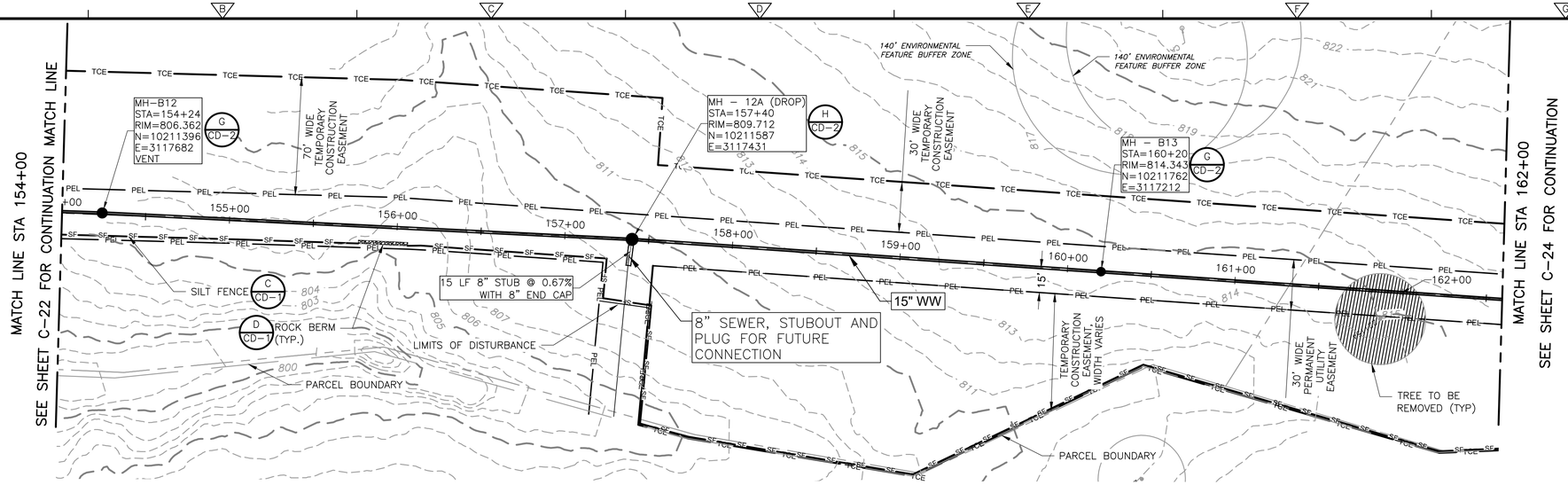

PLAN

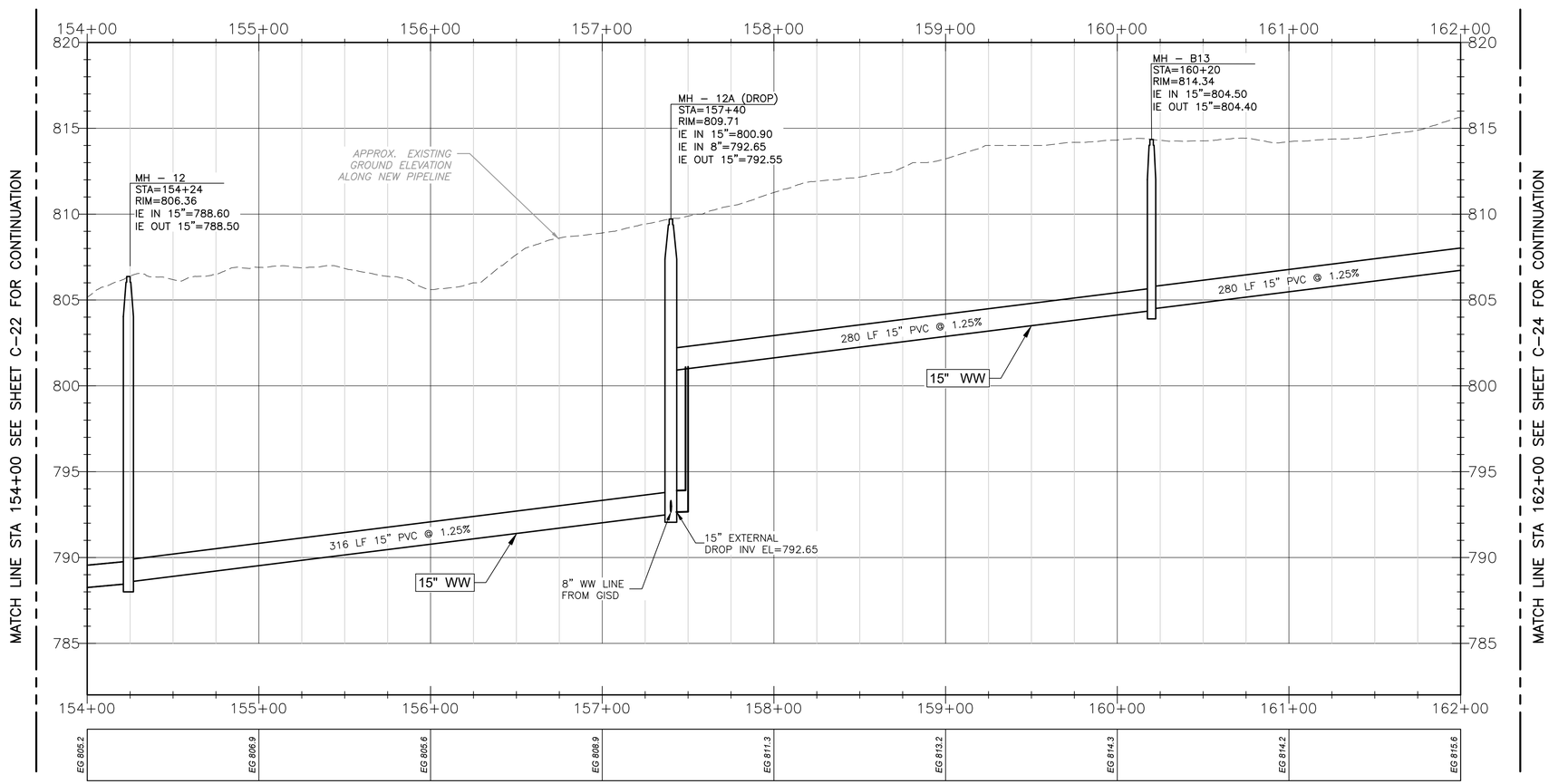

PROFILE

HORIZONTAL SCALE
1" = 40'
20 0 40

VERTICAL SCALE
1" = 4'
2 0 4

STATE OF TEXAS
GERALD S. FURRIER
129811
LICENSED
PROFESSIONAL ENGINEER
04/30/2024

REV. NO.	DATE	DRWN	CHKD	REMARKS

DESIGNED BY: A KAJALE
DRAWN BY: S MANISANKAR
SHEET CHK'D BY: ASHWIN G
CROSS CHK'D BY: A RHAMES
APPROVED BY: G FURRIER
DATE: APRIL 2024

CDM Smith
8310-1 N Capital of Texas Hwy, Suite 250
Austin, TX 78731
Tel: (512) 346-1100
TBPELS Firm Registration No. F-3043

CITY OF GEORGETOWN, TEXAS

SOUTH LAKE TO SOUTH FORK
WASTEWATER IMPROVEMENTS

BASELINE B
PLAN AND PROFILE
FROM STA 154+00 TO STA 162+00

PROJECT NO. 2048-272644
FILE NAME: C023PLPR.DWG

SHEET NO.
C-23

Plotted: 5/6/2024 11:14:20 AM

XREFs: [CDMS_2234_South_lake_to_South_fork_Border_PP, CEZ001SV, CWP003ST, CEP000SS, CWP001LS, CDMS-003-S Lake to SF Interceptor-TOPO-SURF, CEP005TP] Images: []
Last saved by: KAJALEAN Time: 5/6/2024 10:53:44 AM
pw:\\cdmsmith-az02-pw.bentley.com:pw_pw1\2048\272644\04 Design Services NML_50%\02 Civil\10 BIM_CADD\C023PLPR.dwg
© 2022 CDM SMITH ALL RIGHTS RESERVED.
REUSE OF DOCUMENTS: THESE DOCUMENTS AND DESIGNS PROVIDED BY PROFESSIONAL SERVICE, INCORPORATED HEREIN, ARE THE PROPERTY OF CDM SMITH AND ARE NOT TO BE USED, IN WHOLE OR PART, FOR ANY OTHER PROJECT WITHOUT THE WRITTEN AUTHORIZATION OF CDM SMITH.

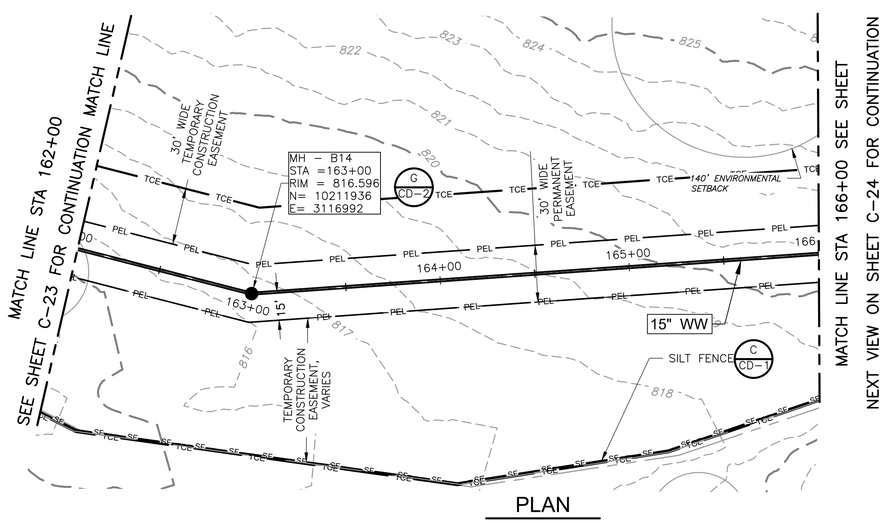

PLAN

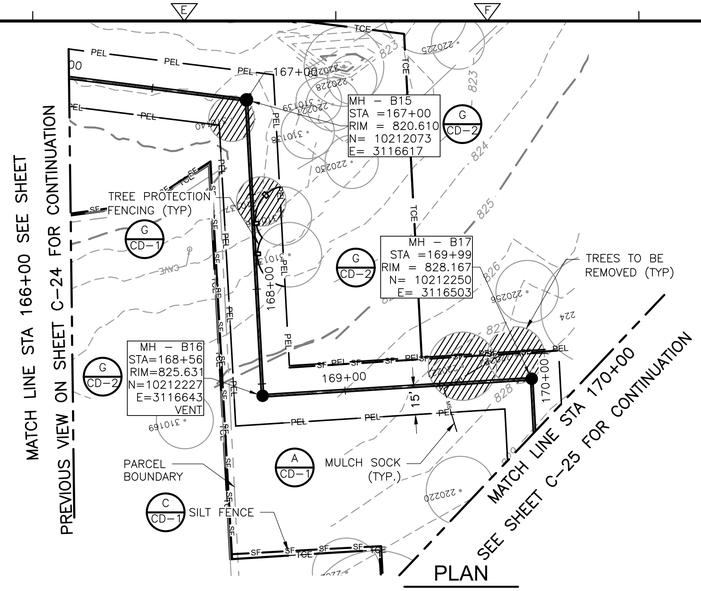

PLAN

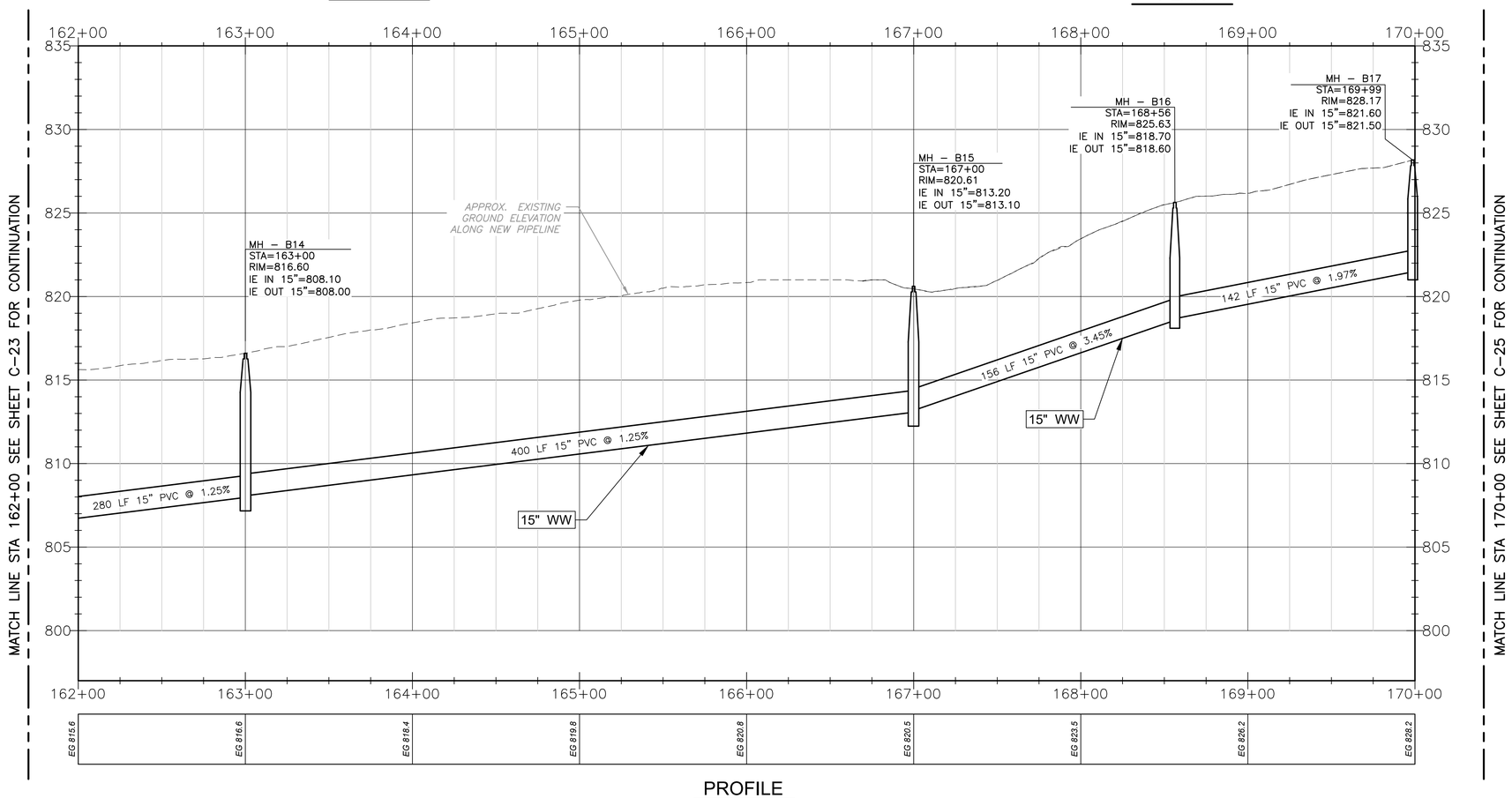

PROFILE

HORIZONTAL SCALE
1" = 40'
20 0 40

VERTICAL SCALE
1" = 4'
2 0 4

STATE OF TEXAS
GERALD S. FURRIER
129811
LICENSED
PROFESSIONAL ENGINEER
04/30/2024

REV. NO.	DATE	DRWN	CHKD	REMARKS

DESIGNED BY: A KAJALE
DRAWN BY: S MANISANKAR
SHEET CHK'D BY: ASHWIN G
CROSS CHK'D BY: A RHAMES
APPROVED BY: G FURRIER
DATE: APRIL 2024

CDM Smith
8310-1 N Capital of Texas Hwy, Suite 250
Austin, TX 78731
Tel: (512) 346-1100
TBPELS Firm Registration No. F-3043

CITY OF GEORGETOWN, TEXAS

SOUTH LAKE TO SOUTH FORK
WASTEWATER IMPROVEMENTS

BASELINE B
PLAN AND PROFILE
FROM STA 162+00 TO STA 170+00

PROJECT NO. 2048-272644
FILE NAME: C024PLPR.DWG
SHEET NO.
C-24

Plotted: 5/3/2024 12:04:09 PM

XREFs: [CDMS_2234_South_lake_to_South_fork_Border_PP, CEZ001SV, CWP003ST, CEP003SS, CDMS-003-S Lake to SF Interceptor-TOPO-SURF, CEP005TP] [images-I]
Last saved by: LZ2 Time: 5/3/2024 12:03:38 PM
C:\pw_pn\lz2\d3151948\C024PLPR.dwg

© 2022 CDM SMITH ALL RIGHTS RESERVED
REUSE OF DOCUMENTS: THESE DOCUMENTS AND DESIGNS PROVIDED BY PROFESSIONAL SERVICE, INCORPORATED HEREIN, ARE THE PROPERTY OF CDM SMITH AND ARE NOT TO BE USED, IN WHOLE OR PART, FOR ANY OTHER PROJECT WITHOUT THE WRITTEN AUTHORIZATION OF CDM SMITH.

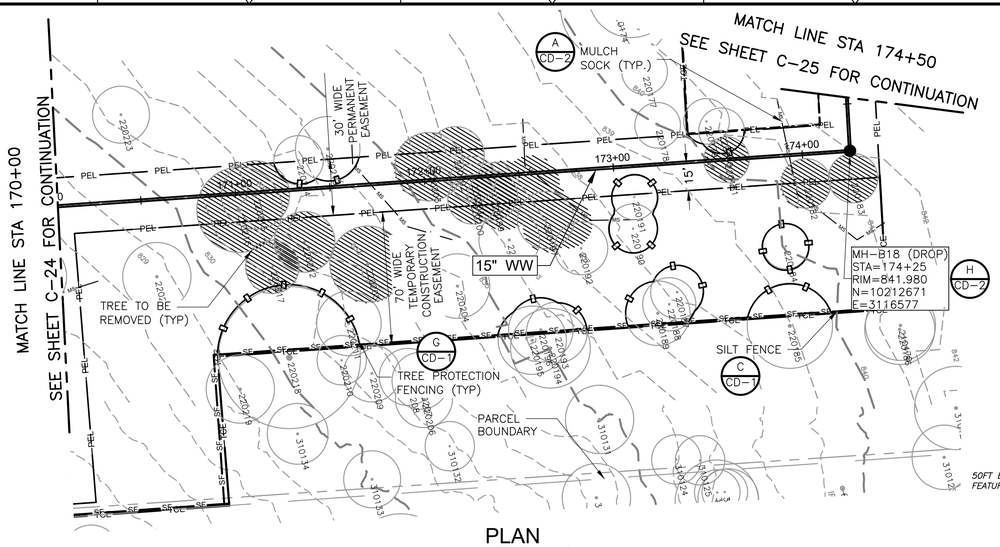

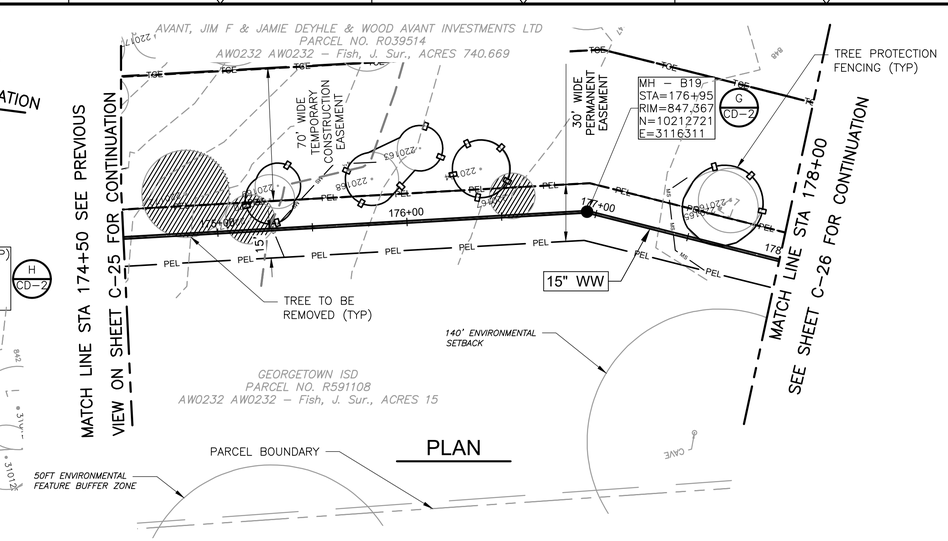

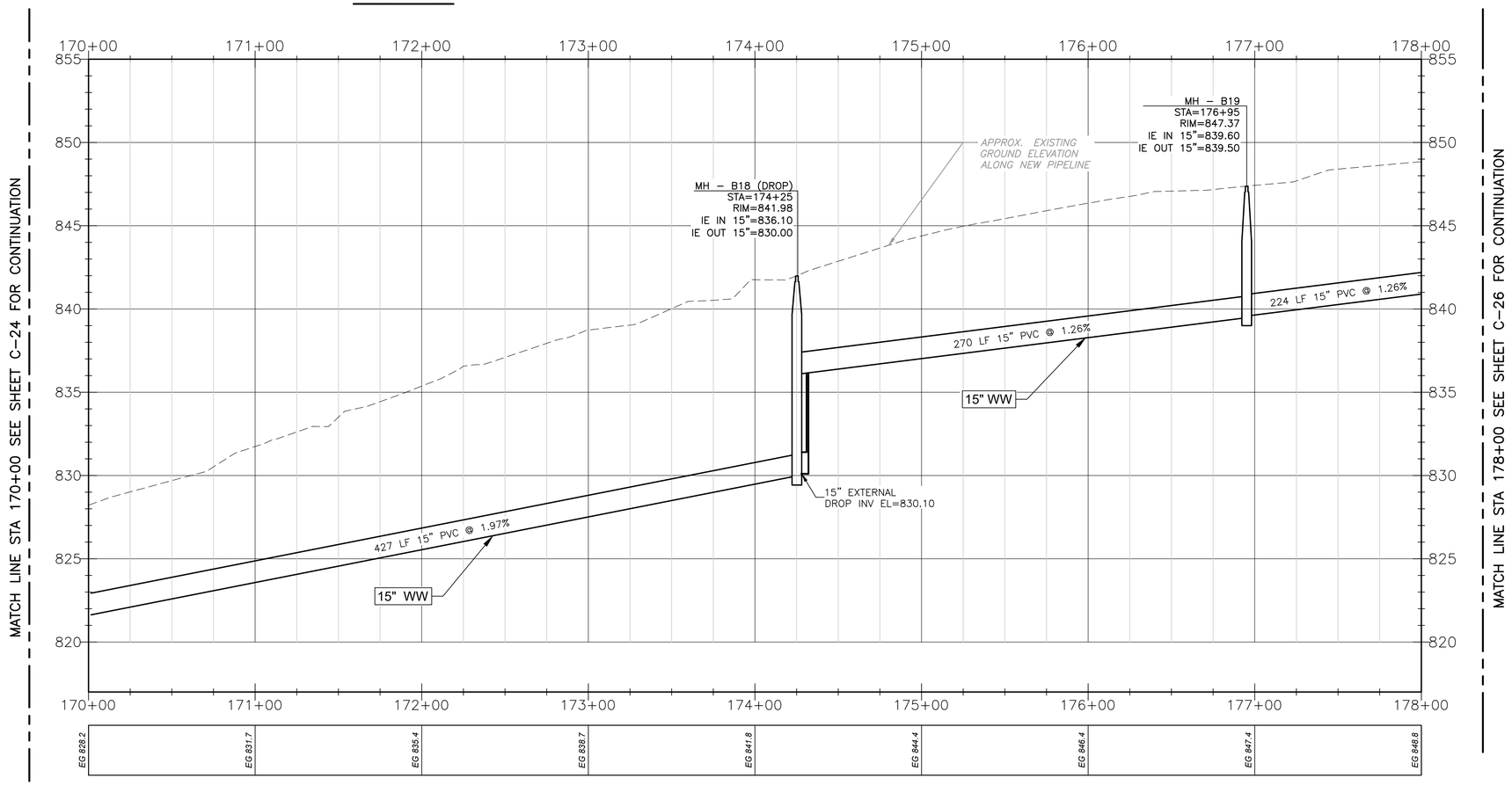

HORIZONTAL SCALE
1" = 40'
20 0 40

VERTICAL SCALE
1" = 4'
2 0 4

STATE OF TEXAS
GERALD S. FURRIER
129811
LICENSED
PROFESSIONAL ENGINEER

04/30/2024

REV. NO.	DATE	DRWN	CHKD	REMARKS

DESIGNED BY: A KAJALE
DRAWN BY: S MANISANKAR
SHEET CHK'D BY: ASHWIN G
CROSS CHK'D BY: A RHAMES
APPROVED BY: G FURRIER
DATE: APRIL 2024

CDM Smith
8310-1 N Capital of Texas Hwy, Suite 250
Austin, TX 78731
Tel: (512) 346-1100
TBPELS Firm Registration No. F-3043

CITY OF GEORGETOWN, TEXAS
SOUTH LAKE TO SOUTH FORK
WASTEWATER IMPROVEMENTS

BASELINE B
PLAN AND PROFILE
FROM STA 170+00 TO STA 178+00

PROJECT NO. 2048-272644
FILE NAME: C025PLPR.DWG
SHEET NO.
C-25

Plotted: 5/3/2024 12:06:46 PM

XREFs: [CDMS_2234_South_lake_to_South_fork_Border_PP, CEZ001SV, CWP003ST, CEP000SS, CWP001LS, CDMS-003-S Lake to SF Interceptor-TOPO-SURF, CEP005TP] Images: []
Last saved by: LIZZ Time: 5/3/2024 12:06:00 PM
C:\pw_pl1\liz2\d3151948\C025PLPR.dwg
© 2022 CDM SMITH ALL RIGHTS RESERVED.
REUSE OF DOCUMENTS: THESE DOCUMENTS AND DESIGNS PROVIDED BY PROFESSIONAL SERVICE, INCORPORATED HEREIN, ARE THE PROPERTY OF CDM SMITH AND ARE NOT TO BE USED, IN WHOLE OR PART, FOR ANY OTHER PROJECT WITHOUT THE WRITTEN AUTHORIZATION OF CDM SMITH.

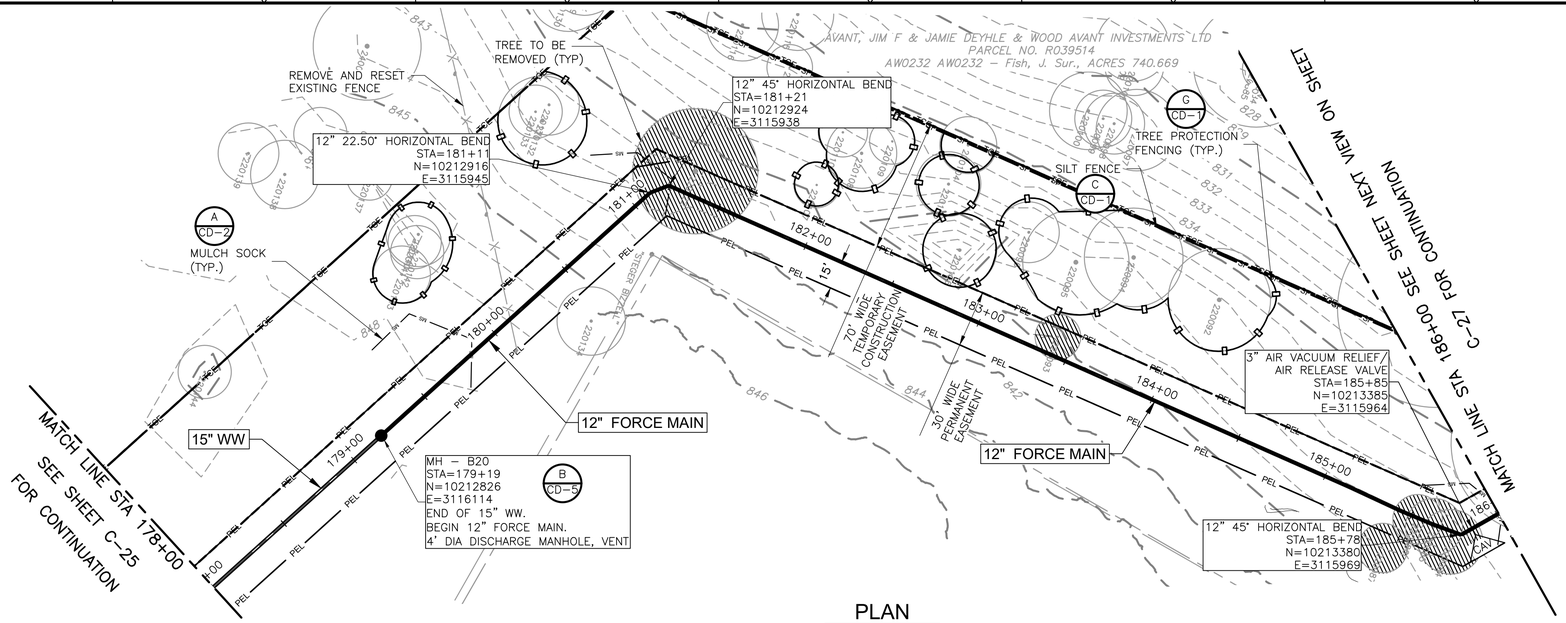

PLAN

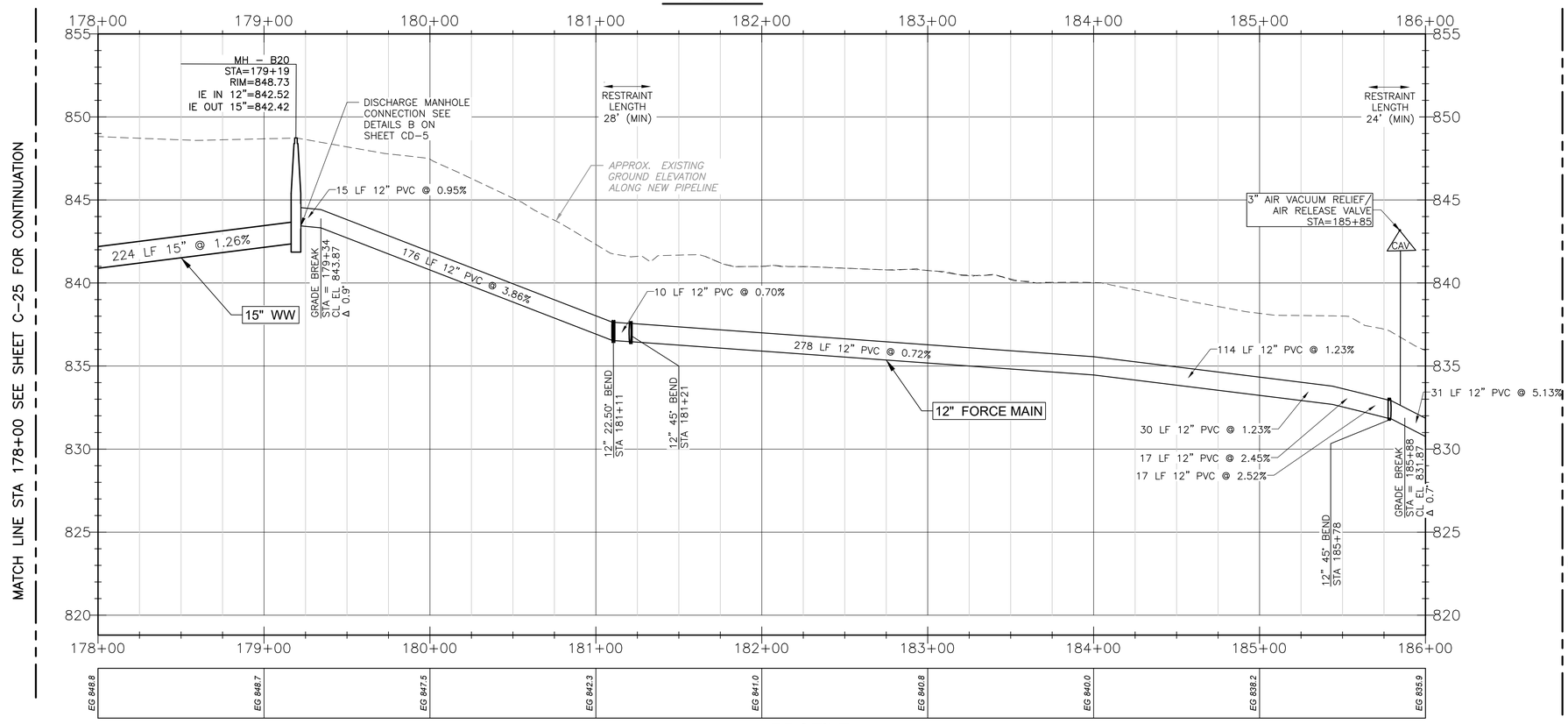

PROFILE

HORIZONTAL SCALE
1" = 40'
20 0 40

VERTICAL SCALE
1" = 4'
2 0 4

STATE OF TEXAS
GERALD S. FURRIER
129811
LICENSED
PROFESSIONAL ENGINEER
04/30/2024

REV. NO.	DATE	DRWN	CHKD	REMARKS

DESIGNED BY: A KAJALE
DRAWN BY: S MANISANKAR
SHEET CHK'D BY: ASHWIN G
CROSS CHK'D BY: A RHAMES
APPROVED BY: G FURRIER
DATE: APRIL 2024

CDM Smith
8310-1 N Capital of Texas Hwy, Suite 250
Austin, TX 78731
Tel: (512) 346-1100
TBPELS Firm Registration No. F-3043

CITY OF GEORGETOWN, TEXAS

SOUTH LAKE TO SOUTH FORK
WASTEWATER IMPROVEMENTS

BASELINE B
PLAN AND PROFILE
FROM STA 178+00 TO STA 186+00

PROJECT NO. 2048-272644
FILE NAME: CO26PLPR.DWG
SHEET NO.
C-26

XREFs: [CE20015V, CVP003ST, CEP000SS, CVP001LS, CDMS-003-S Lake to SF Intercepto~TOPO-SURF, CDMS_2234_South_lake_to_South_fork_Border_PP, CEP005TP] Images: []
Last saved by: SAMIDURAM, Time: 06-05-2024 22:08:36
pw:\\cdmsmith-ad02-pw.bentley.com:pw_pi\12049\272644\04 Design Services NM_50%\02 Civil\10 BIM_CADD\C026PLPR.dwg
© 2022 CDM SMITH ALL RIGHTS RESERVED.
REUSE OF DOCUMENTS: THESE DOCUMENTS AND DESIGNS PROVIDED BY PROFESSIONAL SERVICE, INCORPORATED HEREIN, ARE THE PROPERTY OF CDM SMITH AND ARE NOT TO BE USED, IN WHOLE OR PART, FOR ANY OTHER PROJECT WITHOUT THE WRITTEN AUTHORIZATION OF CDM SMITH.

Plotted: 5/6/2024 10:09:04 PM

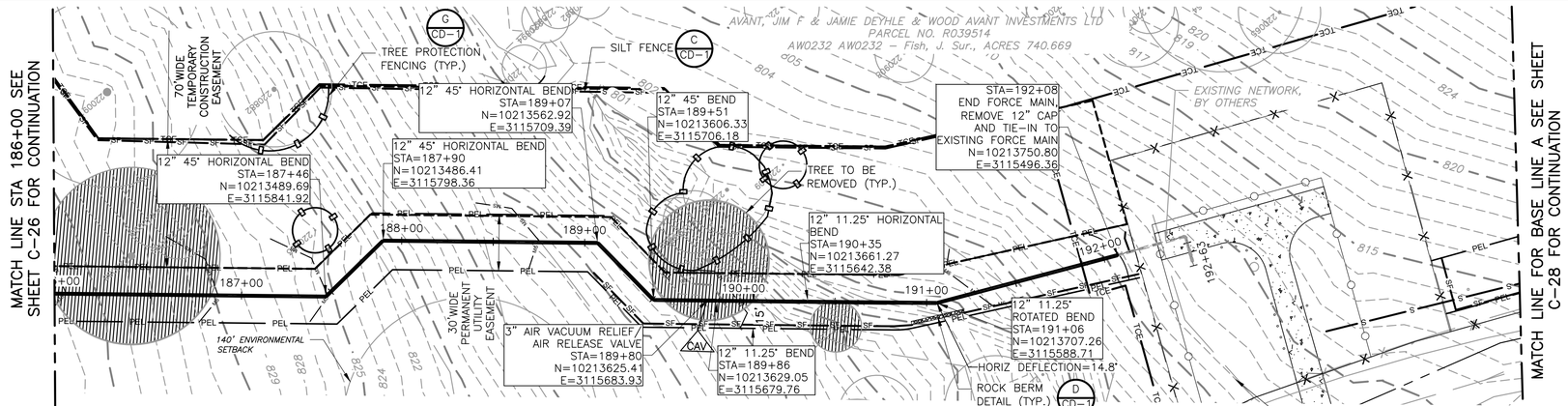

PLAN

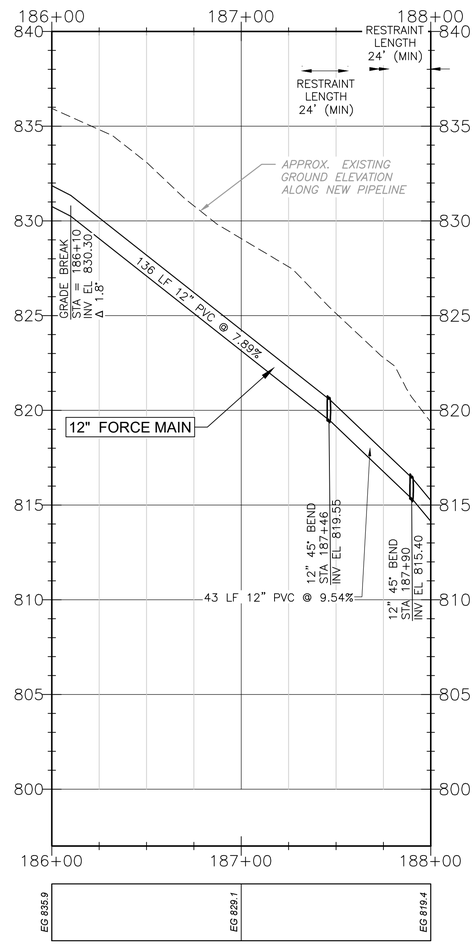

PROFILE

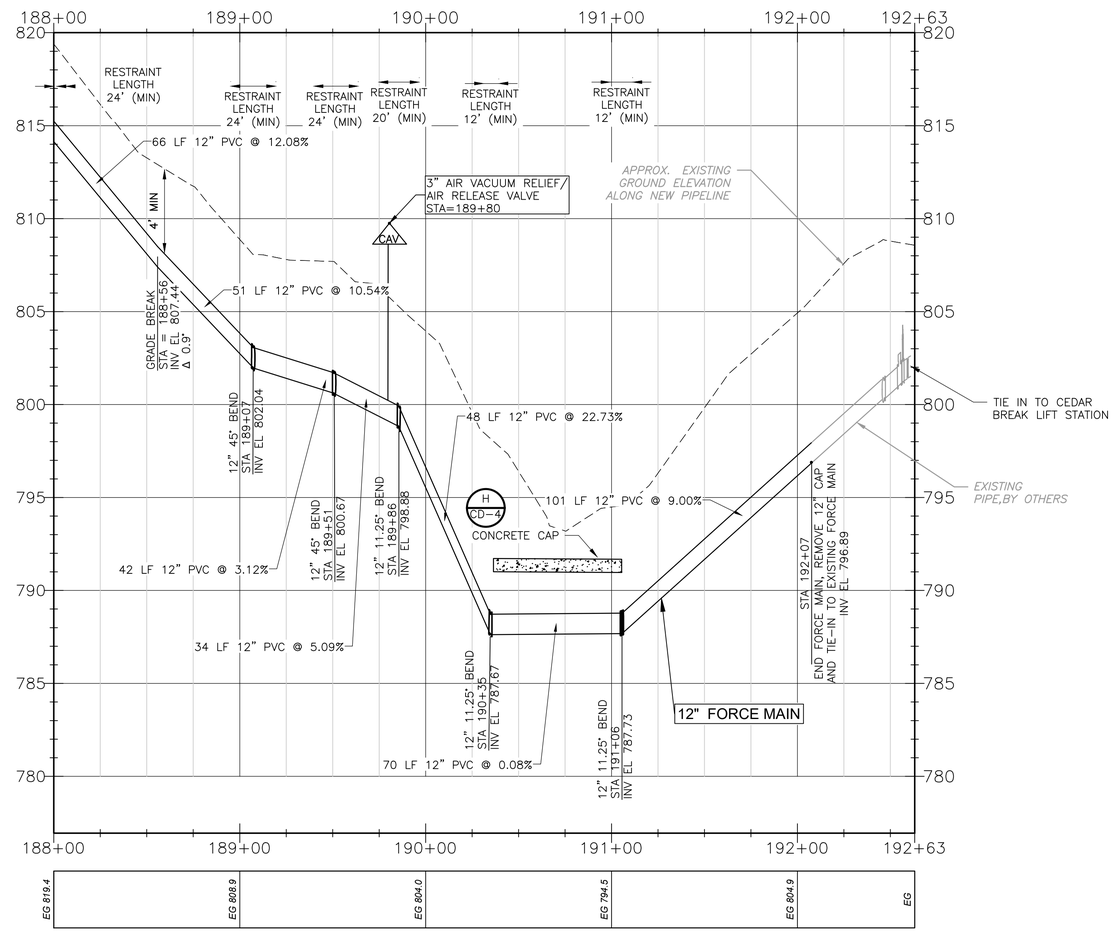

PROFILE

HORIZONTAL SCALE
1" = 40'
20 0 40

VERTICAL SCALE
1" = 4'
2 0 4

STATE OF TEXAS
GERALD S. FURRIER
129911
LICENSED
PROFESSIONAL ENGINEER
04/30/2024

REV. NO.	DATE	DRWN	CHKD	REMARKS
1	5/29/24	SM	GF	ADDEMDUM 2

DESIGNED BY: A KAJALE
DRAWN BY: S MANISANKAR
SHEET CHK'D BY: ASHWIN G
CROSS CHK'D BY: A RHAMES
APPROVED BY: G FURRIER
DATE: APRIL 2024

CDM Smith
8310-1 N Capital of Texas Hwy, Suite 250
Austin, TX 78731
Tel: (512) 346-1100
TBPELS Firm Registration No. F-3043

CITY OF GEORGETOWN, TEXAS

SOUTH LAKE TO SOUTH FORK
WASTEWATER IMPROVEMENTS

BASELINE B
PLAN AND PROFILE
FROM STA 186+00 TO STA 192+63

PROJECT NO. 2048-272644
FILE NAME: C027PLPR.DWG
SHEET NO.
C-27

XREFs: ICEZ001SV; CWP003ST; CEP000SS; CWP001LS; CDMS-003-S Lake to SF Interceptor-TOPO-SURF; CDMS_2234_South_lake_to_South_fork_Border_PP; CEP005TP] Images: []
Last saved by: MALPASSSK Time: 5/29/2024 10:46:53 AM
pw:\\cdmsmith-az02-pw.bentley.com:pw_pw1\2048\272644\04 Design Services NM_50%\02 Civil\10 BIM_CADD\C027PLPR.dwg
© 2022 CDM SMITH ALL RIGHTS RESERVED.
REUSE OF DOCUMENTS: THESE DOCUMENTS AND DESIGNS PROVIDED BY PROFESSIONAL SERVICE, INCORPORATED HEREIN, ARE THE PROPERTY OF CDM SMITH AND ARE NOT TO BE USED, IN WHOLE OR PART, FOR ANY OTHER PROJECT WITHOUT THE WRITTEN AUTHORIZATION OF CDM SMITH.

Plotted: 5/29/2024 3:28:41 PM

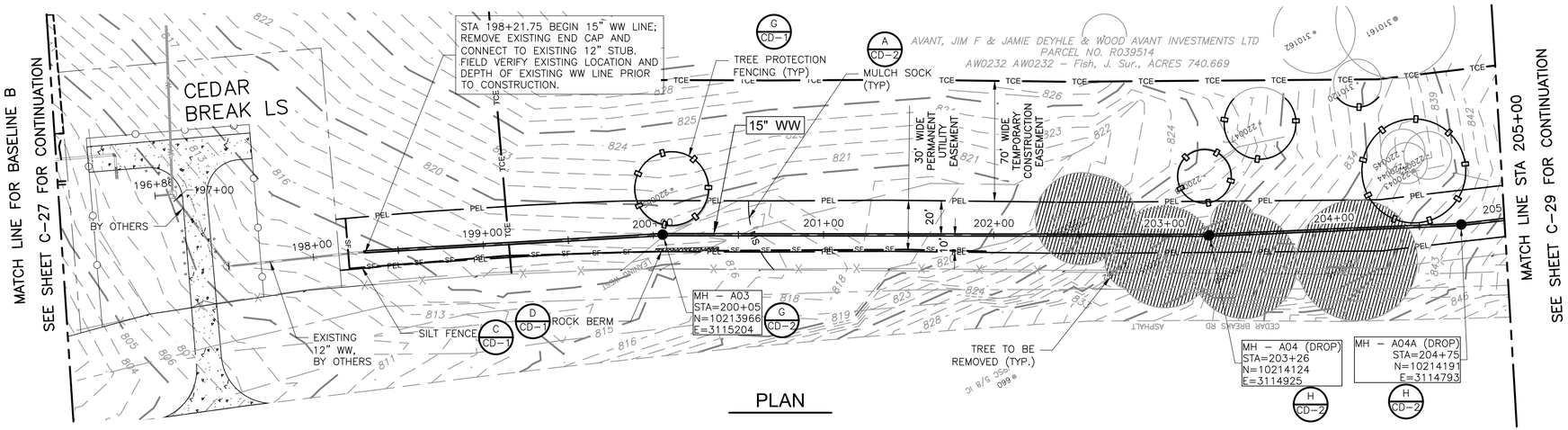

PLAN

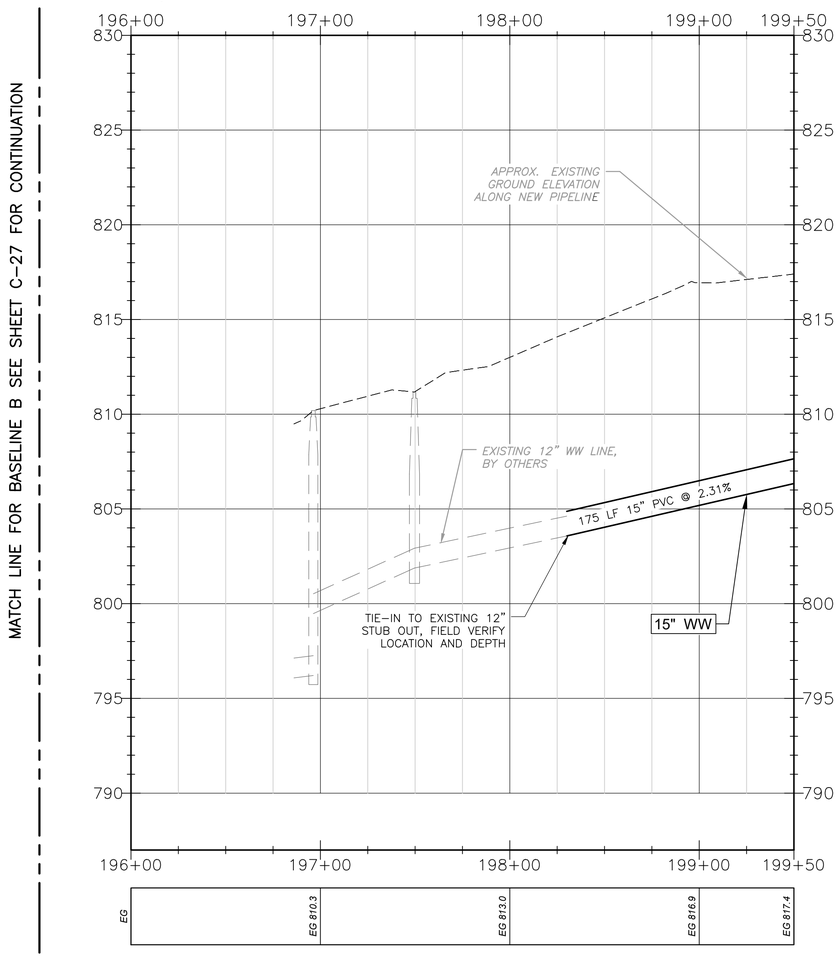

PROFILE

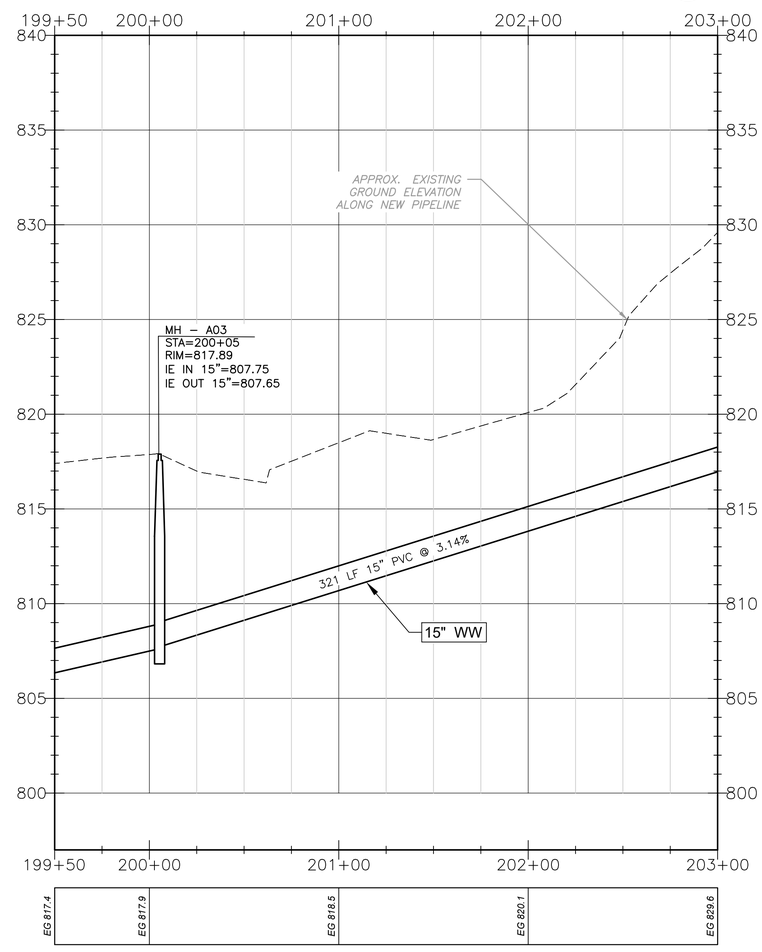

PROFILE

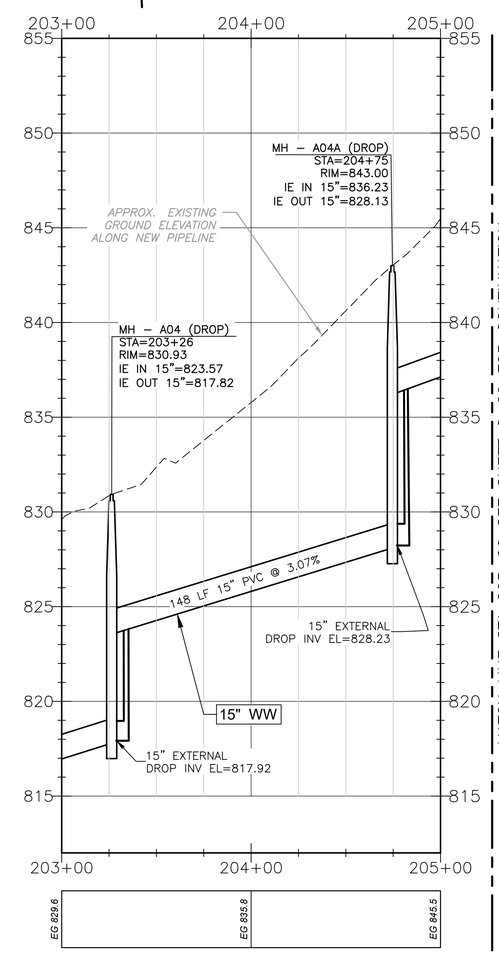

PROFILE

HORIZONTAL SCALE
1" = 40'
20 0 40

VERTICAL SCALE
1" = 4'
2 0 4

STATE OF TEXAS
GERALD S. FURRIER
129811
LICENSED
PROFESSIONAL ENGINEER

04/30/2024

REV. NO.	DATE	DRWN	CHKD	REMARKS

DESIGNED BY: A KAJALE
DRAWN BY: S MANISANKAR
SHEET CHK'D BY: ASHWIN G
CROSS CHK'D BY: A RHAMES
APPROVED BY: G FURRIER
DATE: APRIL 2024

CDM Smith
8310-1 N Capital of Texas Hwy, Suite 250
Austin, TX 78731
Tel: (512) 346-1100
TBPELS Firm Registration No. F-3043

CITY OF GEORGETOWN, TEXAS
SOUTH LAKE TO SOUTH FORK
WASTEWATER IMPROVEMENTS

BASELINE A
PLAN AND PROFILE
FROM STA 196+00 TO STA 205+00

PROJECT NO. 2048-272644
FILE NAME: C028PLPR.DWG
SHEET NO.
C-28

XREFs: [CDMS_2234_South_lake_to_South_fork_Border_PP, CEZ001SV, CWP001YP, CEP000SS_do not use, CWP001LS, CWP003ST, CDMS-003-S Lake to SF Interceptor-TOPO-SURF, CEP005TP] Images: []
Last saved by: LIZ2 Time: 5/3/2024 12:14:46 PM
C:\pw_pl1\liz2\d3151948\C028PLPR.dwg
© 2022 CDM SMITH ALL RIGHTS RESERVED.
REUSE OF DOCUMENTS: THESE DOCUMENTS AND DESIGNS PROVIDED BY PROFESSIONAL SERVICE, INCORPORATED HEREIN, ARE THE PROPERTY OF CDM SMITH AND ARE NOT TO BE USED, IN WHOLE OR PART, FOR ANY OTHER PROJECT WITHOUT THE WRITTEN AUTHORIZATION OF CDM SMITH.

Plotted: 5/3/2024 12:15:04 PM

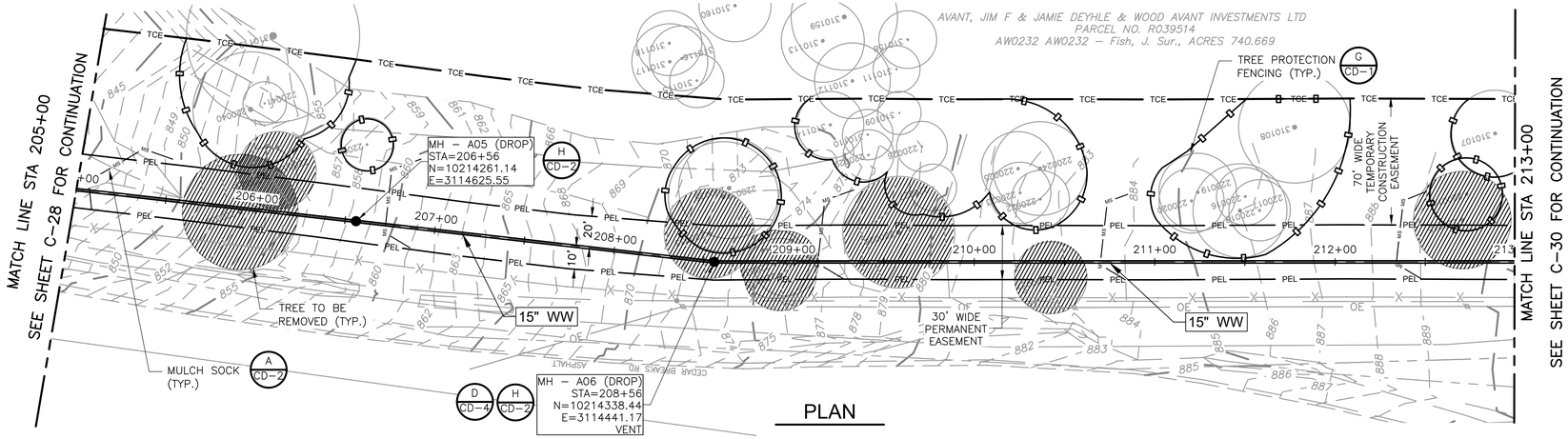

PLAN

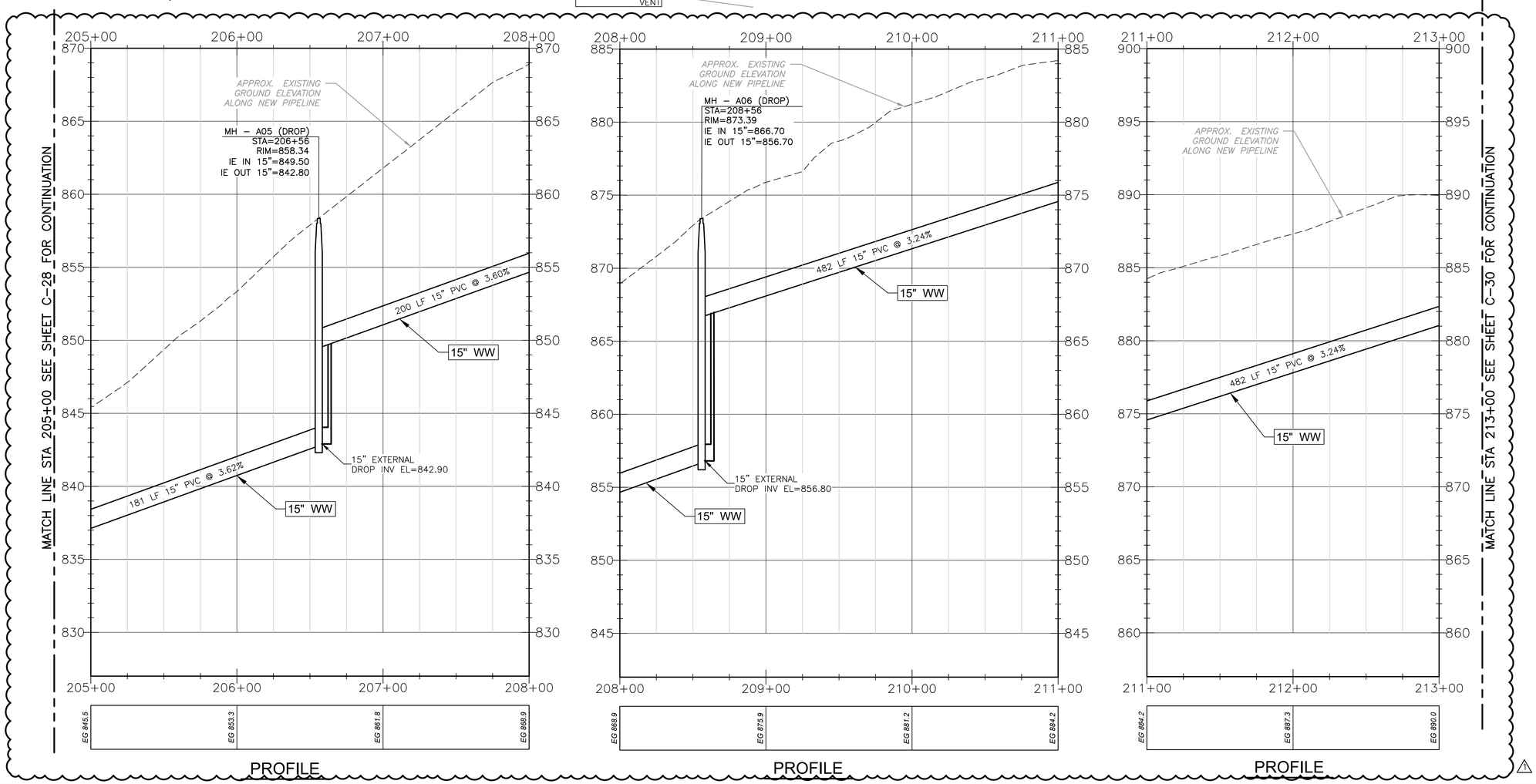

HORIZONTAL SCALE
1" = 40'
20 0 40

VERTICAL SCALE
1" = 4'
2 0 4

STATE OF TEXAS
GERALD S. FURRIER
129811
LICENSED
PROFESSIONAL ENGINEER
04/30/2024

REV. NO.	DATE	DRWN	CHKD	REMARKS
1	5/29/24	MA	GF	ADDENDUM 2

DESIGNED BY: A KAJALE
DRAWN BY: S MANISANKAR
SHEET CHK'D BY: ASHWIN G
CROSS CHK'D BY: A RHAMES
APPROVED BY: G FURRIER
DATE: APRIL 2024

CDM Smith
8310-1 N Capital of Texas Hwy, Suite 250
Austin, TX 78731
Tel: (512) 346-1100
TBPELS Firm Registration No. F-3043

CITY OF GEORGETOWN, TEXAS

SOUTH LAKE TO SOUTH FORK
WASTEWATER IMPROVEMENTS

BASELINE A
PLAN AND PROFILE
FROM STA 205+00 TO STA 213+00

PROJECT NO. 2048-272644
FILE NAME: C029PLPR.DWG
SHEET NO.
C-29

Plotted: 5/29/2024 10:29:59 AM

XREFs: [CEZ001SV, CNP001YP, CEP000SS, CNP003ST, CDMS-003-S Lake to SF Interceptor-TOPO-SURF, CDMS_2234_South_lake_to_South_fork_Border_PP, CEP005TP] Images: []
Last saved by: SAMIDURAIM, Time: 5/29/2024 6:27:01 PM
C:\pw_pt\samiduraim\d3151948\C029PLPR.dwg
© 2022 CDM SMITH ALL RIGHTS RESERVED
REUSE OF DOCUMENTS: THESE DOCUMENTS AND DESIGNS PROVIDED BY PROFESSIONAL SERVICE, INCORPORATED HEREIN, ARE THE PROPERTY OF CDM SMITH AND ARE NOT TO BE USED, IN WHOLE OR PART, FOR ANY OTHER PROJECT WITHOUT THE WRITTEN AUTHORIZATION OF CDM SMITH.

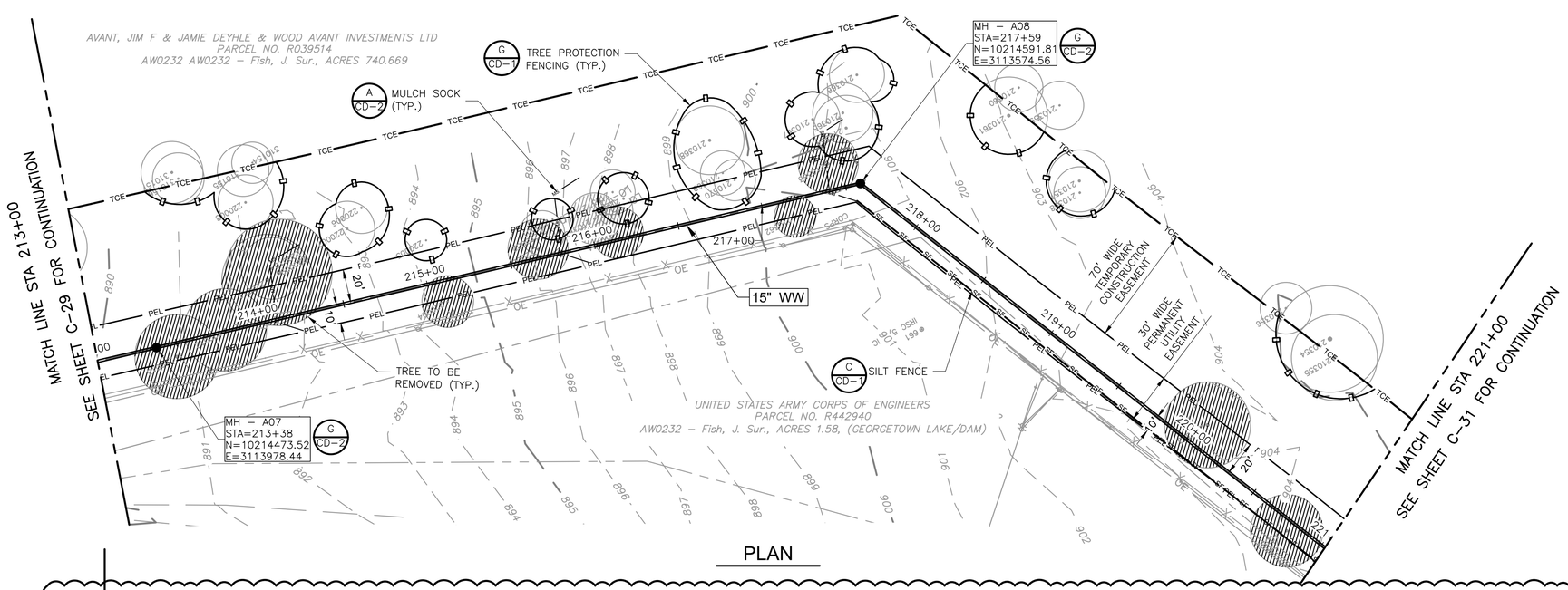

PLAN

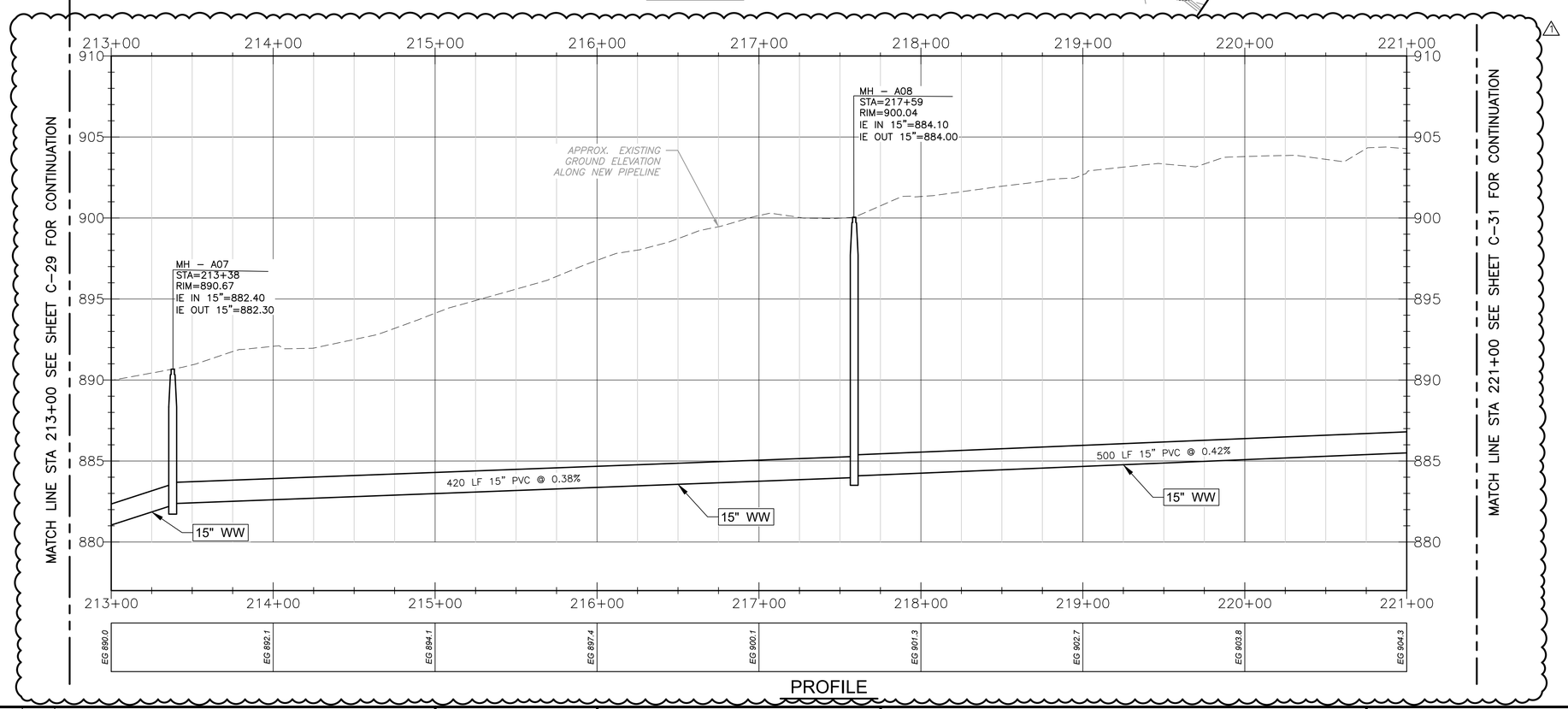

PROFILE

HORIZONTAL SCALE
1" = 40'
20 0 40

VERTICAL SCALE
1" = 4'
2 0 4

STATE OF TEXAS
GERALD S. FURRIER
129811
LICENSED
PROFESSIONAL ENGINEER

04/30/2024

REV. NO.	DATE	DRWN	CHKD	REMARKS
1	5/29/24	MS	GF	ADDENDUM 2

DESIGNED BY: A KAJALE
DRAWN BY: S MANISANKAR
SHEET CHK'D BY: ASHWIN G
CROSS CHK'D BY: A RHAMES
APPROVED BY: G FURRIER
DATE: APRIL 2024

CDM Smith
8310-1 N Capital of Texas Hwy, Suite 250
Austin, TX 78731
Tel: (512) 346-1100
TBPELS Firm Registration No. F-3043

CITY OF GEORGETOWN, TEXAS

SOUTH LAKE TO SOUTH FORK
WASTEWATER IMPROVEMENTS

BASELINE A
PLAN AND PROFILE
FROM STA 213+00 TO STA 221+00

PROJECT NO. 2048-272644
FILE NAME: C030PLPR.DWG
SHEET NO.
C-30

XREFs: [CEZ001SV, CWP001YP, CEP000SS, CWP003ST, CDMS-003-S Lake to SF Interceptor-TOPO-SURF, CDMS_2234_South_lake_to_South_fork_Border_PP, CEP005TP] Images: []
Last saved by: KAJALEAN Time: 5/29/2024 5:41:18 PM
pw:\\cdmsmith-az02-pw.bentley.com:pw_pl1\20480\272644\04 Design Services NM_50%\02 Civil\10 BIM_CADD\C030PLPR.dwg
© 2022 CDM SMITH ALL RIGHTS RESERVED.
REUSE OF DOCUMENTS: THESE DOCUMENTS AND DESIGNS PROVIDED BY PROFESSIONAL SERVICE, INCORPORATED HEREIN, ARE THE PROPERTY OF CDM SMITH AND ARE NOT TO BE USED, IN WHOLE OR PART, FOR ANY OTHER PROJECT WITHOUT THE WRITTEN AUTHORIZATION OF CDM SMITH.

Plotted: 6/14/2024 10:22:27 AM

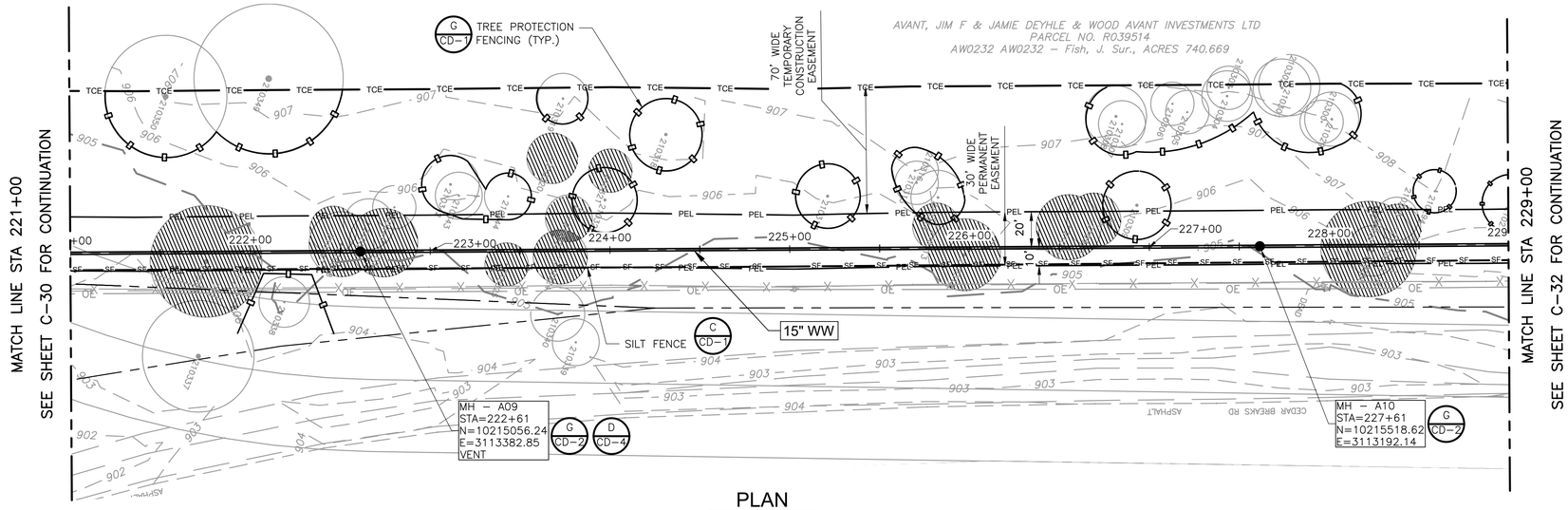

PLAN

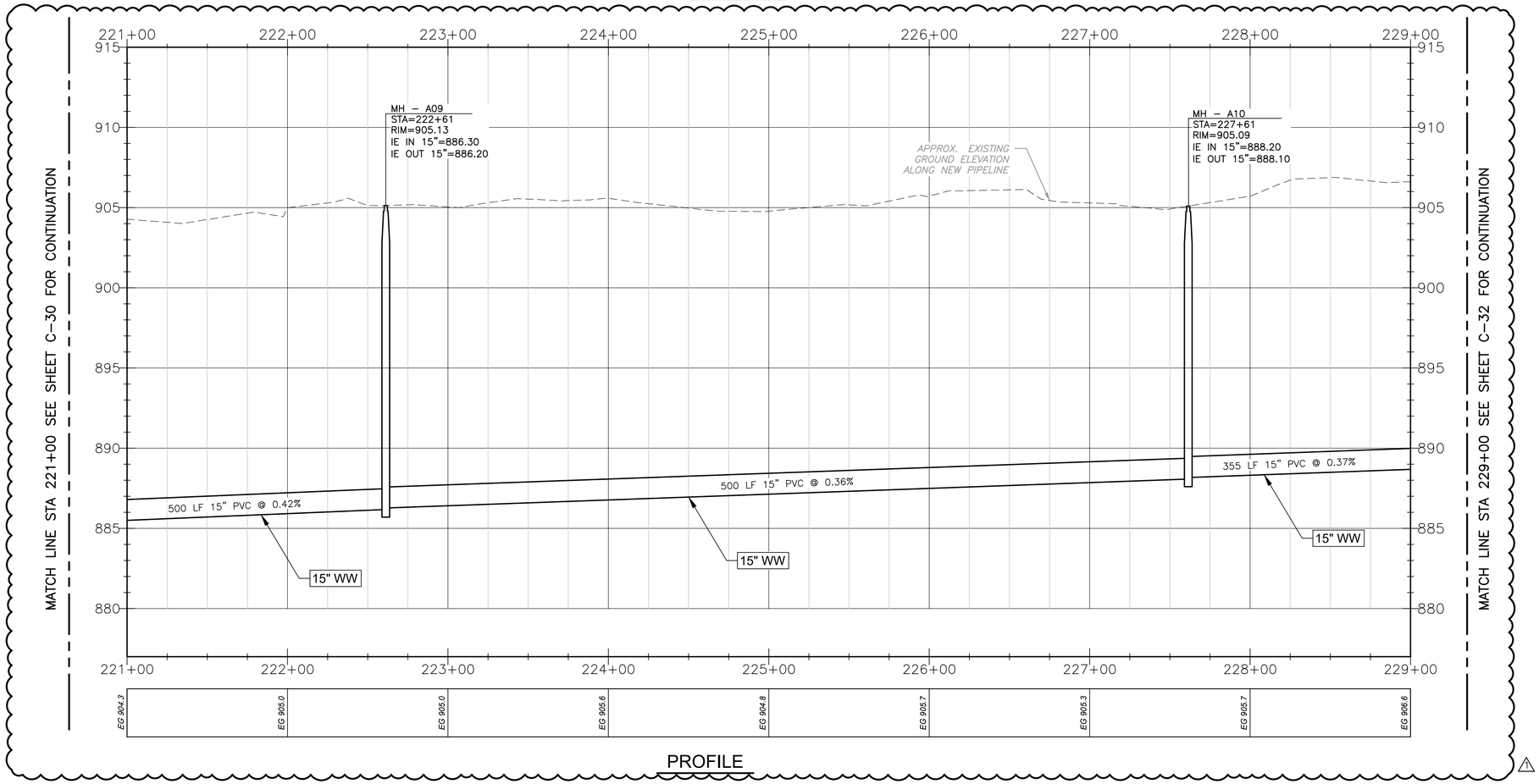

PROFILE

NOTES:

1. PRIOR TO CONSTRUCTION, THE CONTRACTOR SHALL IDENTIFY THE LOCATION, SIZE, AND DEPTH OF EXISTING GAS, ELECTRIC, TELEPHONE, FIBER OPTIC, WATER, AND WASTEWATER LINES CROSSING THE PROPOSED ALIGNMENT.
2. GRASSED AREA TO BE SODDED AND WATERED AFTER CONSTRUCTION.
3. CONTRACTOR TO REVEGETATE ALL DISTURBED AREA.
4. CONTRACTOR SHALL INSTALL ROCK BERM AT LOW POINT OF SILT FENCE.
5. SEE SHEET G-9 FOR TREE LIST TABLE.

HORIZONTAL SCALE
1" = 40'
20 0 40

VERTICAL SCALE
1" = 4'
2 0 4

STATE OF TEXAS
GERALD S. FURRIER
129811
LICENSED
PROFESSIONAL ENGINEER
04/30/2024

REV. NO.	DATE	DRWN	CHKD	REMARKS
1	5/29/24	MS	GF	ADDENDUM 2

DESIGNED BY: A KAJALE
DRAWN BY: S MANISANKAR
SHEET CHK'D BY: ASHWIN G
CROSS CHK'D BY: A RHAMES
APPROVED BY: G FURRIER
DATE: APRIL 2024

CDM Smith
8310-1 N Capital of Texas Hwy, Suite 250
Austin, TX 78731
Tel: (512) 346-1100
TBPELS Firm Registration No. F-3043

CITY OF GEORGETOWN, TEXAS

SOUTH LAKE TO SOUTH FORK
WASTEWATER IMPROVEMENTS

BASELINE A
PLAN AND PROFILE
FROM STA 221 TO STA 229+00

PROJECT NO. 2048-272644
FILE NAME: C031PLPR.DWG
SHEET NO.
C-31

XREFs: [CEZ001SV, CWP001YP, CEP000SS, CWP003ST, CDMS-003-S Lake to SF Interceptor-TOPO-SURF, CDMS_2234_South_lake_to_South_fork_Border_PP, CEP005TP] Images: []
Last saved by: MALPASSSK Time: 5/29/2024 10:22:52 AM
pw:\\cdmsmith-az02-pw.bentley.com:pw_pl1\2048\272644\04 Design Services NM_50%\02 Civil\10 BIM_CADD\C031PLPR.dwg
© 2022 CDM SMITH ALL RIGHTS RESERVED.
REUSE OF DOCUMENTS: THESE DOCUMENTS AND DESIGNS PROVIDED BY PROFESSIONAL SERVICE, INCORPORATED HEREIN, ARE THE PROPERTY OF CDM SMITH AND ARE NOT TO BE USED, IN WHOLE OR PART, FOR ANY OTHER PROJECT WITHOUT THE WRITTEN AUTHORIZATION OF CDM SMITH.

Plotted: 5/29/2024 10:31:55 AM

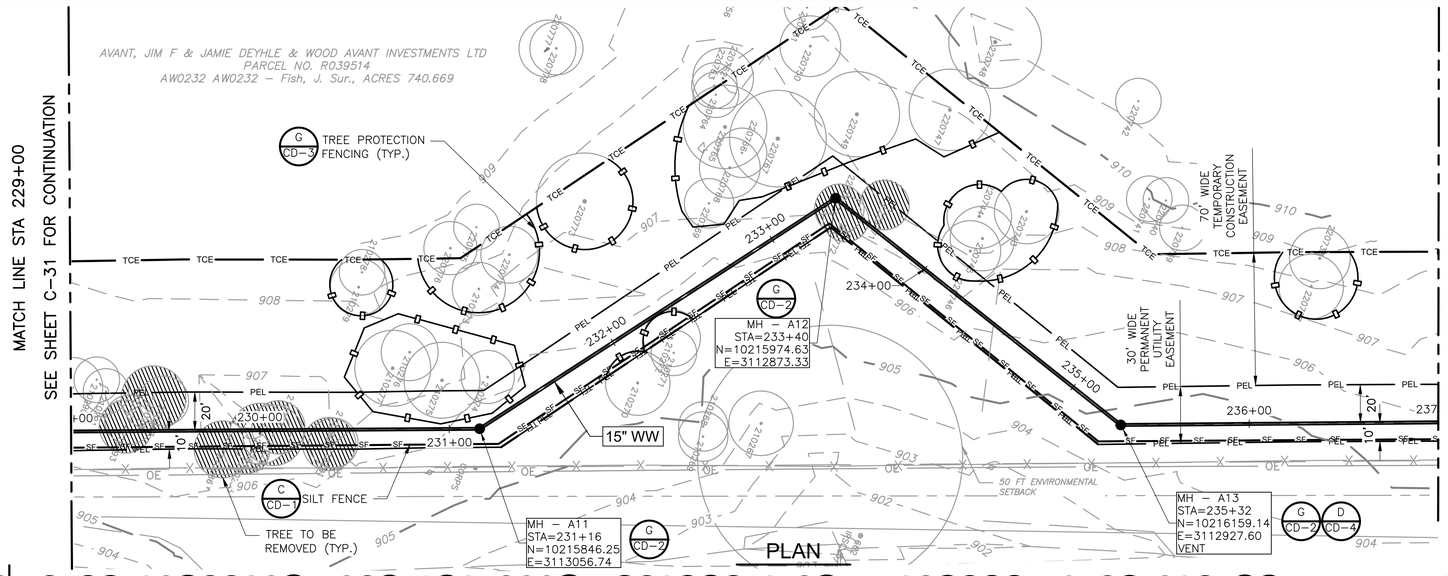

PLAN

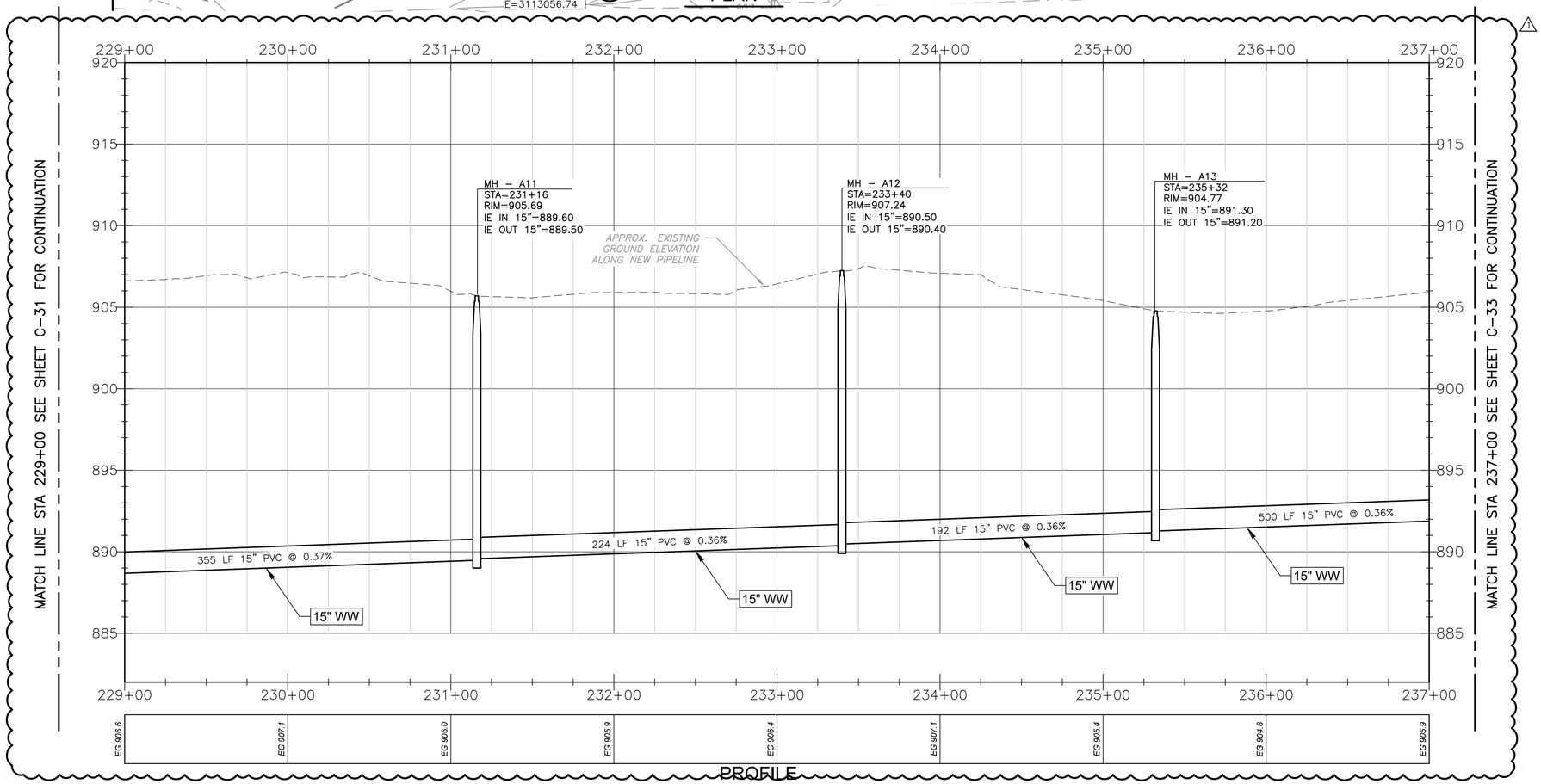

PROFILE

NOTES:

1. PRIOR TO CONSTRUCTION, THE CONTRACTOR SHALL IDENTIFY THE LOCATION, SIZE, AND DEPTH OF EXISTING GAS, ELECTRIC, TELEPHONE, FIBER OPTIC, WATER, AND WASTEWATER LINES CROSSING THE PROPOSED ALIGNMENT.
2. GRASSED AREA TO BE SODDED AND WATERED AFTER CONSTRUCTION.
3. CONTRACTOR TO REVEGETATE ALL DISTURBED AREA.
4. CONTRACTOR SHALL INSTALL ROCK BERM AT LOW POINT OF SILT FENCE.
5. SEE SHEET G-9 FOR TREE LIST TABLE.

HORIZONTAL SCALE
1" = 40'
20 0 40

VERTICAL SCALE
1" = 4'
2 0 4

STATE OF TEXAS
GERALD S. FURRIER
129811
LICENSED
PROFESSIONAL ENGINEER
04/30/2024

REV. NO.	DATE	DRWN	CHKD	REMARKS
1	5/29/24	MS	GF	ADDENDUM 2

DESIGNED BY: A KAJALE
DRAWN BY: S MANISANKAR
SHEET CHK'D BY: ASHWIN G
CROSS CHK'D BY: A RHAMES
APPROVED BY: G FURRIER
DATE: APRIL 2024

CDM Smith
8310-1 N Capital of Texas Hwy, Suite 250
Austin, TX 78731
Tel: (512) 346-1100
TBPELS Firm Registration No. F-3043

CITY OF GEORGETOWN, TEXAS

SOUTH LAKE TO SOUTH FORK
WASTEWATER IMPROVEMENTS

BASELINE A
PLAN AND PROFILE
FROM STA 229+00 TO STA 237+00

PROJECT NO. 2048-272644
FILE NAME: C032PLPR.DWG
SHEET NO.
C-32

XREFs: [CEZ001SV, CEP000SS, CWP003ST, CDMS-003-S Lake to SF Interceptor-TOPO-SURF, CDMS_2234_South_lake_to_South_fork_Border_PP, CEP005TP] Images: []
Last saved by: KAJALEAN Time: 5/29/2024 10:30:32 AM
pw:\\cdmsmith-az02-pw.bentley.com:pw_pt\12048\272644\04 Design Services NM_50%\02 Civil\10 BIM_CADD\C032PLPR.dwg
© 2022 CDM SMITH ALL RIGHTS RESERVED
REUSE OF DOCUMENTS: THESE DOCUMENTS AND DESIGNS PROVIDED BY PROFESSIONAL SERVICE, INCORPORATED HEREIN, ARE THE PROPERTY OF CDM SMITH AND ARE NOT TO BE USED, IN WHOLE OR PART, FOR ANY OTHER PROJECT WITHOUT THE WRITTEN AUTHORIZATION OF CDM SMITH.
Plotted: 5/29/2024 10:31:00 AM

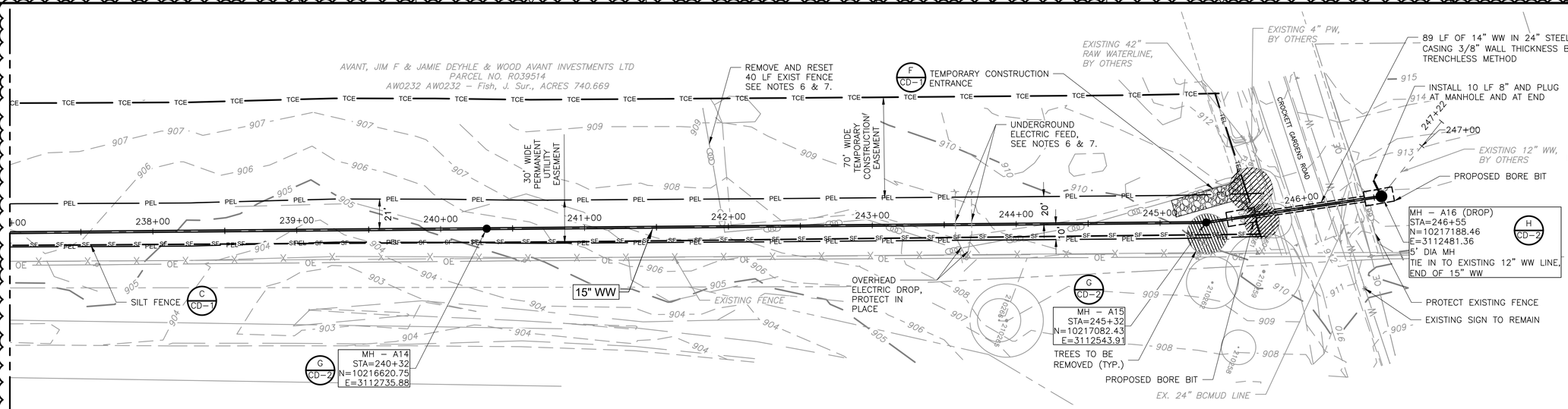

PLAN

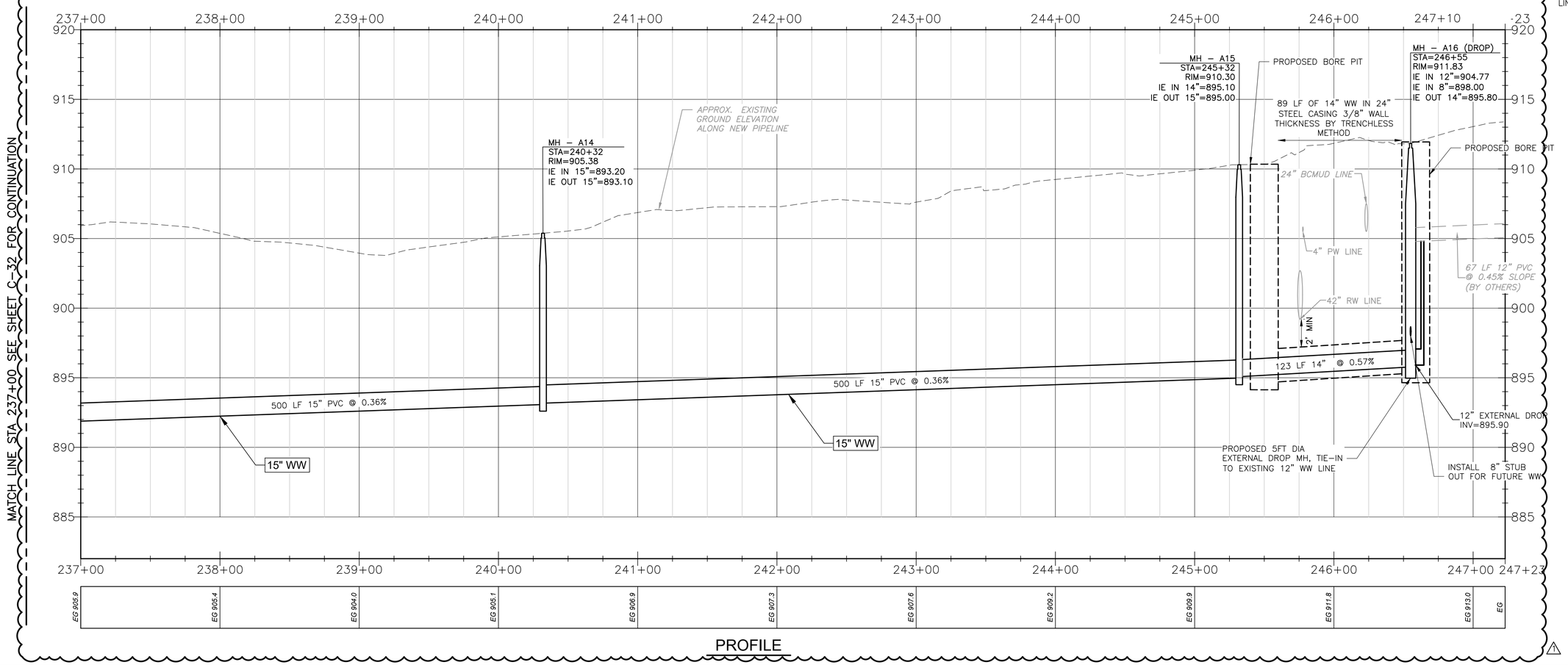

PROFILE

NOTES:

1. PRIOR TO CONSTRUCTION OF ANY INTERCEPTOR SEGMENT, THE CONTRACTOR SHALL IDENTIFY THE LOCATION, SIZE, AND DEPTH OF EXISTING GAS, ELECTRIC, TELEPHONE, FIBER OPTIC, WATER, AND WASTEWATER LINES CROSSING THE PROPOSED ALIGNMENT.
2. GRASSED AREA TO BE SEEDED AND WATERED AFTER CONSTRUCTION.
3. CONTRACTOR TO REVEGETATE ALL DISTURBED AREA.
4. CONTRACTOR SHALL INSTALL ROCK BERM AT LOW POINT OF SILT FENCE.
5. SEE SHEET G-9 FOR TREE LIST TABLE.
6. CONTRACTOR SHALL COORDINATE WITH THE WATER TREATMENT PLANT CONTRACTOR FOR THE REMOVAL OF THE EXISTING FENCE AND TO RELOCATE THE UNDERGROUND ELECTRIC FEED.
7. CONTRACTOR SHALL INSTALL A TEMPORARY FENCE DURING THE CONSTRUCTION OF WW LINE.

HORIZONTAL SCALE
1" = 40'
20 0 40

VERTICAL SCALE
1" = 4'
2 0 4

STATE OF TEXAS
GERALD S. FURRIER
129811
LICENSED
PROFESSIONAL ENGINEER
04/30/2024

REV. NO.	DATE	DRWN	CHKD	REMARKS
1	5/29/24	SM	GF	ADDENDUM 2

DESIGNED BY: A KAJALE
DRAWN BY: S MANISANKAR
SHEET CHK'D BY: ASHWIN G
CROSS CHK'D BY: A RHAMES
APPROVED BY: G FURRIER
DATE: APRIL 2024

CDM Smith
8310-1 N Capital of Texas Hwy, Suite 250
Austin, TX 78731
Tel: (512) 346-1100
TBPELS Firm Registration No. F-3043

CITY OF GEORGETOWN, TEXAS

SOUTH LAKE TO SOUTH FORK WASTEWATER IMPROVEMENTS

BASELINE A
PLAN AND PROFILE
FROM STA 237+00 TO STA 247+23

PROJECT NO. 2048-272644
FILE NAME: C033PLPR.DWG
SHEET NO.
C-33

XREFs: [CEZ001SV, CEP003SS, CWP003ST, CDMS-003-S Lake to SF Interceptor-TOPO-SURF, CDMS_2234_South_lake_to_South_fork_Border_PP, CEP005TP] Images: []
Last saved by: MALPASSSK Time: 5/29/2024 10:17:19 AM
pw:\\cdmsmith-as02.pw.bentley.com:pw_p\12048272\Design Services NM_50%\02 Civil\10 BIM, CADD\C033PLPR.dwg
© 2022 CDM SMITH ALL RIGHTS RESERVED.
REUSE OF DOCUMENTS: THESE DOCUMENTS AND DESIGNS PROVIDED BY PROFESSIONAL SERVICE, INCORPORATED HEREIN, ARE THE PROPERTY OF CDM SMITH AND ARE NOT TO BE USED, IN WHOLE OR PART, FOR ANY OTHER PROJECT WITHOUT THE WRITTEN AUTHORIZATION OF CDM SMITH.

Plotted: 5/29/2024 10:17:50 AM

GUIDELINES FOR DESIGN AND INSTALLATION OF TEMPORARY EROSION AND SEDIMENTATION CONTROLS

TYPE OF STRUCTURE	REACH LENGTH	MAXIMUM DRAINAGE AREA	SLOPE
SILT FENCE	N/A	2 ACRES	0 – 10%
	200 FEET	2 ACRES	10 – 20%
	100 FEET	1 ACRE	20 – 30%
	50 FEET	1/2 ACRE	> 30%
TRIANGLE FILTER DIKE	100 FEET	1/2 ACRE	< 30% SLOPE
	50 FEET	1/4 ACRE	> 30% SLOPE
ROCK BERM *, **	500 FEET	< 5 ACRES	0 – 10%

* FOR ROCK BERM DESIGN WHERE PARAMETERS ARE OTHER THAN STATED, DRAINAGE AREA CALCULATIONS AND ROCK BERM DESIGN MUST BE SUBMITTED FOR REVIEW.

** HIGH SERVICE ROCK BERMS MAY BE REQUIRED IN AREAS OF ENVIRONMENTAL SIGNIFICANCE AS DETERMINED BY THE CITY OF GEORGETOWN.

The Architect/Engineer assumes responsibility for appropriate use of this standard.

REVISION NOTE: ADOPTED 6/21/2006
CITY OF GEORGETOWN CONSTRUCTION STANDARDS AND DETAILS
TEMPORARY EROSION AND SEDIMENTATION CONTROL GUIDELINES
DRAWING NAME: EC01 | SCALE: NTS | DATE: 1/2003 | DRAWN BY: MRS | APPROVED BY: TRB
GEORGETOWN TEXAS EST. 1848 — Georgetown Utility Systems — Your Community Owned Utility

DETAIL A
NTS

NOTE: THIS SECTION IS INTENDED TO ASSIST THOSE PERSONS PREPARING WATER POLLUTION ABATEMENT PLANS (WPAP) OR STORM WATER POLLUTION PREVENTION PLANS (SW3P) THAT COMPLY WITH FEDERAL, STATE AND/OR LOCAL STORM WATER REGULATIONS.

1. THE CONTRACTOR TO INSTALL AND MAINTAIN EROSION/SEDIMENTATION CONTROLS AND TREE/NATURAL AREA PROTECTIVE FENCING PRIOR TO ANY SITE PREPARATION WORK (CLEARING, GRUBBING, GRADING, OR EXCAVATION). CONTRACTOR TO REMOVE EROSION/SEDIMENTATION CONTROLS AT THE COMPLETION OF PROJECT AND GRASS RESTORATION.
2. ALL PROJECTS WITHIN THE RECHARGE ZONE OF THE EDWARD'S AQUIFER SHALL SUBMIT A BEST MANAGEMENT PRACTICES AND WATER POLLUTION AND ABATEMENT PLAN TO THE TNRCC FOR APPROVAL PRIOR TO ANY CONSTRUCTION.
3. THE PLACEMENT OF EROSION/SEDIMENTATION CONTROLS TO BE IN ACCORDANCE WITH THE APPROVED EROSION AND SEDIMENTATION CONTROL PLAN AND WATER POLLUTION ABATEMENT PLAN. DEVIATIONS FROM THE APPROVED PLAN MUST BE SUBMITTED TO AND APPROVED BY THE OWNER'S REPRESENTATIVE.
4. ALL PLANTING SHALL BE DONE BETWEEN MAY 1 AND SEPTEMBER 15 EXCEPT AS SPECIFICALLY AUTHORIZED IN WRITING. IF PLANTING IS AUTHORIZED TO BE DONE OUTSIDE THE DATES SPECIFIED, THE SEED SHALL BE PLANTED WITH THE ADDITION OF WINTER FESCUE (KENTUCKY 31) AT A RATE OF 100lb/ACRE. GRASS SHALL BE COMMON BERMUDA GRASS, HULLED, MINIMUM 82% PURE LIVE SEED. ALL GRASS SEED SHALL BE FREE FROM NOXIOUS WEED, GRADE "A" RECENT CROP, RECLEANED AND TREATED WITH APPROPRIATE FUNGICIDE AT TIME OF MIXING. SEED SHALL BE FURNISHED IN SEALED, STANDARD CONTAINERS WITH DEALER'S GUARANTEED ANALYSIS.
5. ALL DISTURBED AREAS TO BE RESTORED AS NOTED IN THE WATER POLLUTION ABATEMENT PLAN.
6. THE PLANTED AREA TO BE IRRIGATED OR SPRINKLED IN A MANNER THAT WILL NOT ERODE THE TOPSOIL, BUT WILL SUFFICIENTLY SOAK THE SOIL TO A DEPTH OF FOUR (4) INCHES. THE IRRIGATION TO OCCUR AT 10-DAY INTERVALS DURING THE FIRST TWO MONTHS TO INSURE GERMINATION AND ESTABLISHMENT OF THE GRASS . RAINFALL OCCURRENCES OF 1/2 INCH OR GREATER TO POSTPONE THE WATERING SCHEDULE ONE WEEK.
7. RESTORATION TO BE ACCEPTABLE WHEN THE GRASS HAS GROWN AT LEAST 1-1/2 INCHES HIGH WITH 95% *COVERAGE,* PROVIDED NO BARE SPOTS LARGER THAN 25 SQUARE FEET EXIST.
8. A MINIMUM OF FOUR (4) INCHES OF TOPSOIL TO BE PLACED IN ALL AREAS DISTURBED BY CONSTRUCTION.
9. THE CONTRACTOR TO HYDROMULCH OR SOD (AS SHOWN ON PLANS) ALL EXPOSED CUTS AND FILLS UPON COMPLETION OF CONSTRUCTION.
10. EROSION AND SEDIMENTATION CONTROLS TO BE INSTALLED OR MAINTAINED IN A MANNER WHICH DOES NOT RESULT IN SOIL BUILDUP WITHIN TREE DRIPLINE.
11. TO AVOID SOIL COMPACTION, CONTRACTOR SHALL NOT ALLOW VEHICULAR TRAFFIC, PARKING, OR STORAGE OF EQUIPMENT OR MATERIALS IN THE TREE DRIPLINE AREAS.
12. WHERE A FENCE IS CLOSER THAN FOUR (4) FEET TO A TREE TRUNK, PROTECT THE TRUNK WITH STRAPPED-ON PLANKING TO A HEIGHT OF EIGHT (8) FEET (OR TO THE LIMITS OF LOWER BRANCHING) IN ADDITION TO THE FENCING.
13. TREES TO BE REMOVED IN A MANNER WHICH DOES NOT IMPACT TREES TO BE PRESERVED.
14. ANY ROOT EXPOSED BY CONSTRUCTION ACTIVITY TO BE PRUNED FLUSH WITH THE SOIL. BACKFILL ROOT AREAS WITH GOOD QUALITY TOPSOIL AS SOON AS POSSIBLE. IF EXPOSED ROOT AREAS ARE NOT BACKFILLED WITHIN TWO DAYS, COVER THEM WITH ORGANIC MATERIAL IN A MANNER WHICH REDUCES SOIL TEMPERATURE AND MINIMIZES WATER LOSS DUE TO EVAPORATION.
15. CONTRACTOR TO PRUNE VEGETATION TO PROVIDE CLEARANCE FOR STRUCTURES, VEHICULAR TRAFFIC, AND EQUIPMENT BEFORE DAMAGE OCCURS (RIPPING OF BRANCHES, ETC.). ALL FINISHED PRUNING TO BE DONE ACCORDING TO RECOGNIZED, APPROVED STANDARDS OF THE INDUSTRY (REFERENCE THE "NATIONAL ARBORIST ASSOCIATION PRUNING STANDARDS FOR SHADE TREES").
16. THE CONTRACTOR IS TO INSPECT THE CONTROLS AT WEEKLY INTERVALS AND AFTER EVERY RAINFALL EXCEEDING 1/4 INCH TO VERIFY THAT THEY HAVE NOT BEEN SIGNIFICANTLY DISTURBED. ANY ACCUMULATED SEDIMENT AFTER A SIGNIFICANT RAINFALL TO BE REMOVED AND PLACED IN THE OWNER DESIGNATED SPOIL DISPOSAL SITE. THE CONTRACTOR TO CONDUCT PERIODIC INSPECTIONS OF ALL EROSION/SEDIMENTATION CONTROLS AND TO MAKE ANY REPAIRS OR MODIFICATIONS NECESSARY TO ASSURE CONTINUED EFFECTIVE OPERATION OF EACH DEVICE.
17. WHERE THERE IS TO BE AN APPROVED GRADE CHANGE, IMPERMEABLE PAVING SURFACE, TREE WELL, OR OTHER SUCH SITE DEVELOPMENT IMMEDIATELY ADJACENT TO A PROTECTED TREE, ERECT THE FENCE APPROXIMATELY TWO TO FOUR FEET (2'-4') BEHIND THE AREA IN QUESTION.
18. NO ABOVE AND/OR BELOW GROUND TEMPORARY FUEL STORAGE FACILITIES TO BE STORED ON THE PROJECT SITE.
19. IF EROSION AND SEDIMENTATION CONTROL SYSTEMS ARE EXISTING FROM PRIOR CONTRACTS, OWNER'S REPRESENTATIVE AND THE CONTRACTOR TO EXAMINE THE EXISTING EROSION AND SEDIMENTATION CONTROL SYSTEMS FOR DAMAGE PRIOR TO CONSTRUCTION. ANY DAMAGE TO PREEXISTING EROSION AND SEDIMENTATION CONTROLS NOTED TO BE REPAIRED AT OWNERS EXPENSE.
20. INTENTIONAL RELEASE OF VEHICLE OR EQUIPMENT FLUIDS ONTO THE GROUND IS NOT ALLOWED. CONTAMINATED SOIL RESULTING FROM ACCIDENTAL SPILL TO BE REMOVED AND DISPOSED OF PROPERLY.

The Architect/Engineer assumes responsibility for appropriate use of this standard.

REVISION NOTE: ADOPTED 6/21/2006
CITY OF GEORGETOWN CONSTRUCTION STANDARDS AND DETAILS
EROSION AND SEDIMENTATION AND TREE PROTECTION NOTES
DRAWING NAME: EC01A | SCALE: NTS | DATE: 1/2003 | DRAWN BY: MRS | APPROVED BY: TRB

DETAIL B
NTS

The Architect/Engineer assumes responsibility for appropriate use of this standard.

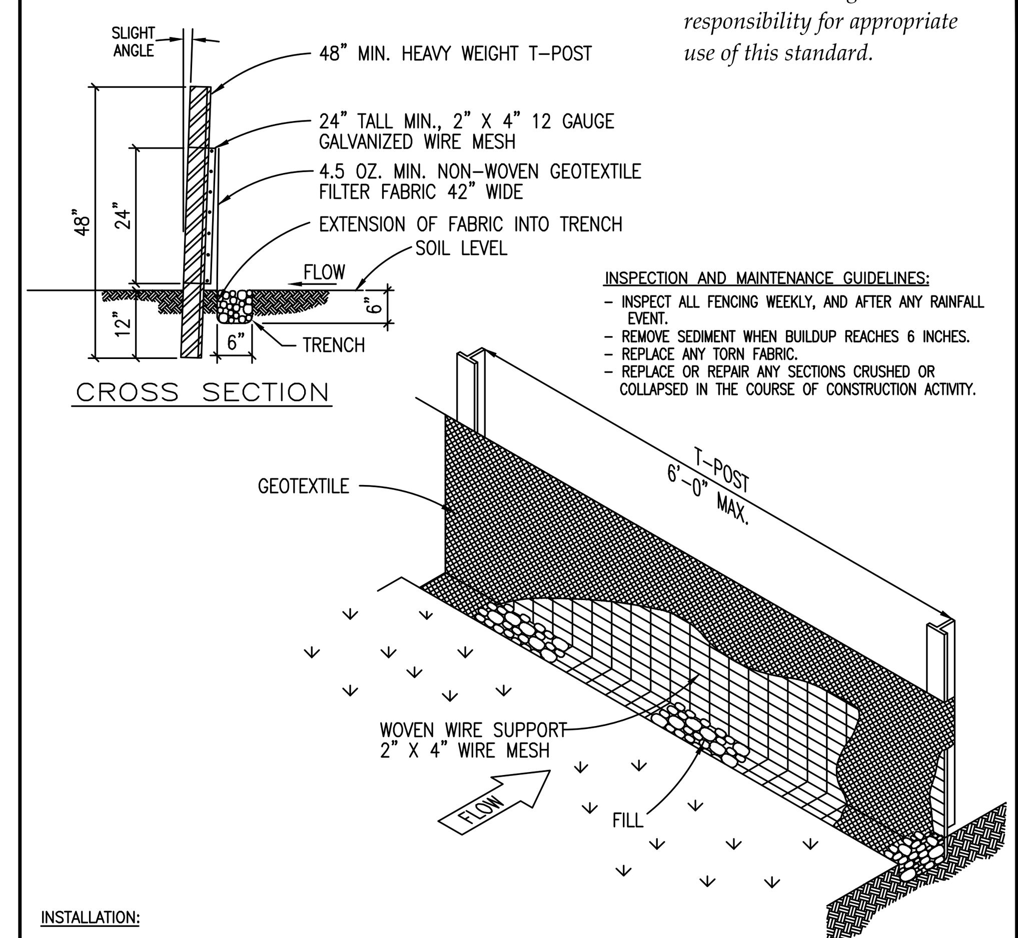

INSPECTION AND MAINTENANCE GUIDELINES:
- INSPECT ALL FENCING WEEKLY, AND AFTER ANY RAINFALL EVENT.
- REMOVE SEDIMENT WHEN BUILDUP REACHES 6 INCHES.
- REPLACE ANY TORN FABRIC.
- REPLACE OR REPAIR ANY SECTIONS CRUSHED OR COLLAPSED IN THE COURSE OF CONSTRUCTION ACTIVITY.

INSTALLATION:
- LAYOUT THE SILT FENCE FOLLOWING AS CLOSELY AS POSSIBLE TO THE CONTOUR.
- CLEAR THE GROUND OF DEBRIS, ROCKS, PLANTS (INCLUDING GRASSES TALLER THAN 2") TO PROVIDE A SMOOTH FLOW APPROACH SURFACE. EXCAVATE 6" DEEP X 6" WIDE TRENCH ON UPSTREAM SIDE OF FACE PER PLANS.
- DRIVE THE HEAVY DUTY T-POST AT LEAST 12 INCHES INTO THE GROUND AND AT A SLIGHT ANGLE TOWARDS THE FLOW.
- ATTACH THE 2" X 4" 12 GAUGE WELDED WIRE MESH TO THE T-POST WITH 11 1/2 GAUGE GALVANIZED T-POST CLIPS. THE TOP OF THE WIRE TO BE 24" ABOVE GROUND LEVEL. THE WELDED WIRE MESH TO BE OVERLAPPED 6" AND TIED AT LEAST 6 TIMES WITH HOG RINGS.
- THE SILT FENCE TO BE INSTALLED WITH A SKIRT A MINIMUM OF 6" WIDE PLACED ON THE UPHILL SIDE OF THE FENCE INSIDE EXCAVATED TRENCH. THE FABRIC TO OVERLAP THE TOP OF THE WIRE BY 1".
- ANCHOR THE SILT FENCE BY BACKFILLING WITH EXCAVATED DIRT AND ROCKS (NOT LARGER THAN 2").
- GEOTEXTILE SPLICES SHOULD BE A MINIMUM OF 18" WIDE ATTACHED IN AT LEAST 6 PLACES. SPLICES IN CONCENTRATED FLOW AREAS WILL NOT BE ACCEPTED.
- SILT FENCE SHALL BE REMOVED WHEN THE SITE IS COMPLETELY STABILIZED SO AS NOT TO BLOCK OR IMPEDE STORM FLOW OR DRAINAGE.

REVISION NOTE: ADOPTED 6/21/2006
CITY OF GEORGETOWN CONSTRUCTION STANDARDS AND DETAILS
SILT FENCE DETAIL
DRAWING NAME: EC02 | SCALE: NTS | DATE: 1/2003 | DRAWN BY: MRS | APPROVED BY: TRB

DETAIL C
NTS

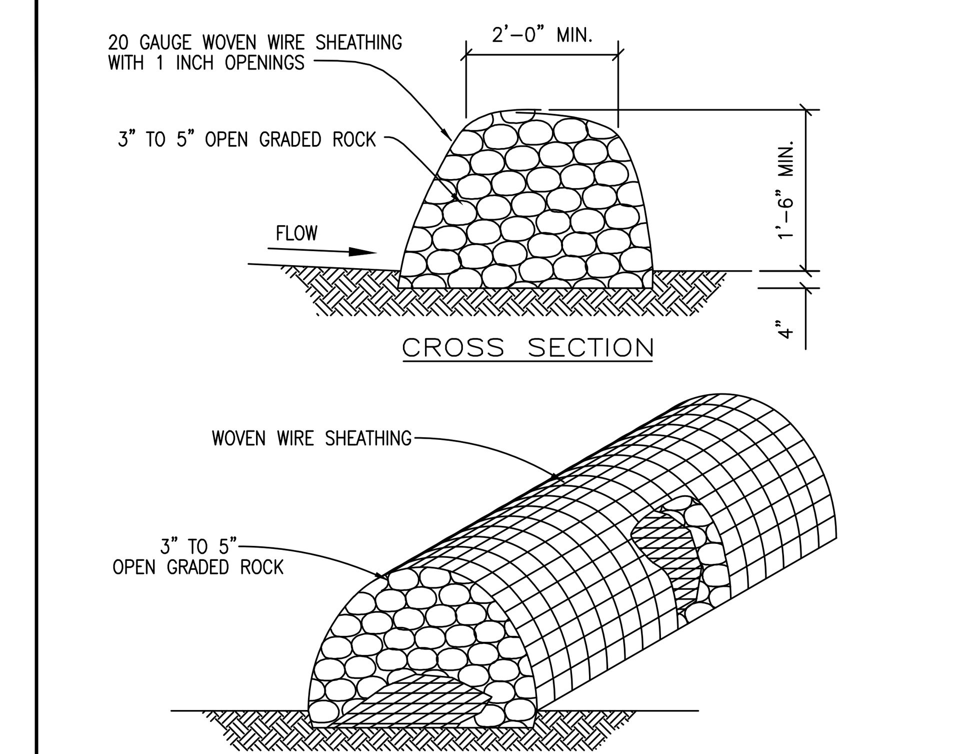

INSTALLATION:
- LAYOUT THE ROCK BERM FOLLOWING AS CLOSELY AS POSSIBLE TO THE CONTOUR.
- CLEAR THE GROUND OF DEBRIS, ROCKS OR PLANTS THAT WILL INTERFERE WITH INSTALLATION.
- PLACE WOVEN WIRE FABRIC ON THE GROUND ALONG THE PROPOSED INSTALLATION WITH ENOUGH OVERLAP TO COMPLETELY ENCIRCLE THE FINISHED SIZE OF THE BERM.
- PLACE THE ROCK ALONG THE CENTER OF THE WIRE TO THE DESIGNATED HEIGHT.
- WRAP THE STRUCTURE WITH THE PREVIOUSLY PLACED WIRE MESH SECURE ENOUGH SO THAT WHEN WALKED ACROSS THE STRUCTURE RETAINS IT'S SHAPE.
- SECURE WITH TIE WIRE.
- THE ENDS OF THE BERM SHOULD BE TIED INTO EXISTING UPSLOPE GRADE AND THE BERM SHOULD BE BURIED IN A TRENCH APPROX. 4 INCHES DEEP TO PREVENT FAILURE OF THE CONTROL.
- THE ROCK BERM SHOULD BE LEFT IN PLACE UNTIL ALL UPSTREAM AREAS ARE STABILIZED AND ACCUMULATED SILT REMOVED.

INSPECTION AND MAINTENANCE GUIDELINES:
- INSPECTION SHOULD BE MADE WEEKLY AND AFTER EACH RAINFALL EVENT BY THE RESPONSIBLE PARTY. FOR INSTALLATIONS IN STREAMBEDS, ADDITIONAL DAILY INSPECTIONS SHOULD BE MADE.
- REMOVE SEDIMENT AND OTHER DEBRIS WHEN BUILDUP REACHES 6 INCHES AND DISPOSE OF THE ACCUMULATED SILT IN AN APPROVED MANNER.
- REPAIR ANY LOOSE WIRE SHEATHING.
- THE BERM SHOULD BE RESHAPED AS NEEDED DURING INSPECTION.
- THE BERM SHOULD BE REPLACED WHEN THE STRUCTURE CEASES TO FUNCTION AS INTENDED DUE TO SILT ACCUMULATION AMONG THE ROCKS, WASHOUT, CONSTRUCTION TRAFFIC DAMAGE, ETC.

The Architect/Engineer assumes responsibility for appropriate use of this standard.

REVISION NOTE: ADOPTED 6/21/2006
CITY OF GEORGETOWN CONSTRUCTION STANDARDS AND DETAILS
ROCK BERM DETAIL
DRAWING NAME: EC03 | SCALE: NTS | DATE: 1/2003 | DRAWN BY: MRS | APPROVED BY: TRB

DETAIL D
NTS

The Architect/Engineer assumes responsibility for appropriate use of this standard.

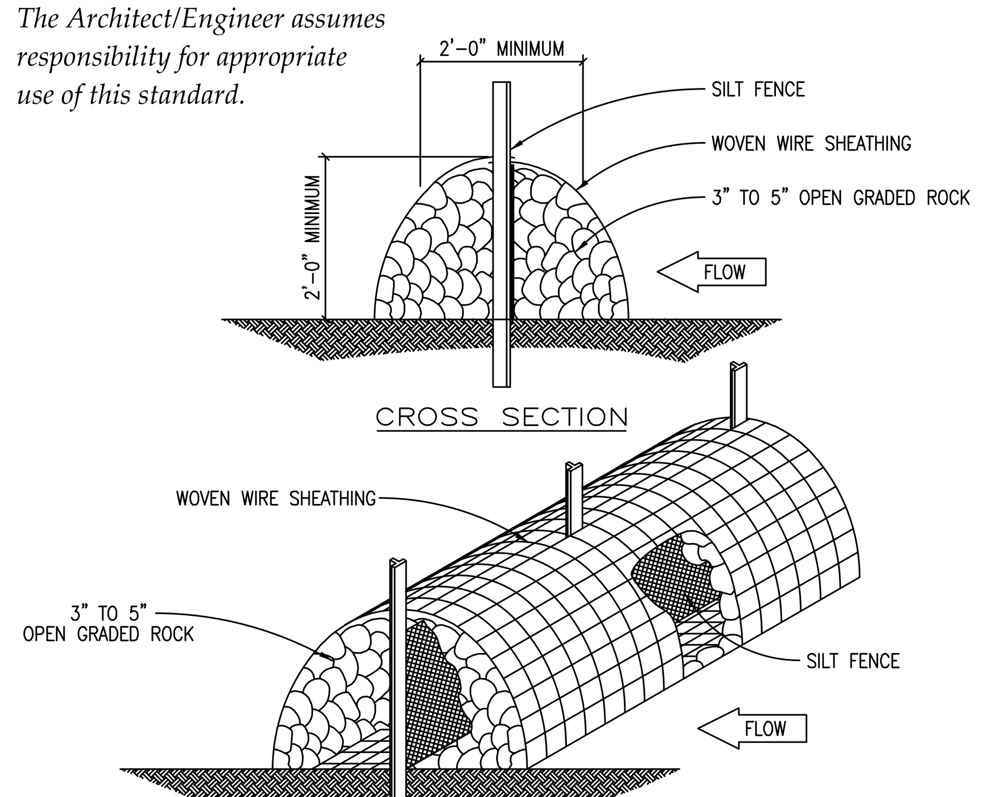

INSTALLATION:
- LAYOUT THE ROCK BERM FOLLOWING AS CLOSELY AS POSSIBLE TO THE CONTOUR.
- CLEAR THE GROUND OF DEBRIS, ROCKS OR PLANTS THAT WILL INTERFERE WITH INSTALLATION.
- PLACE WOVEN WIRE FABRIC ON THE GROUND ALONG THE PROPOSED INSTALLATION WITH ENOUGH OVERLAP TO COMPLETELY ENCIRCLE THE FINISHED SIZE OF THE BERM.
- INSTALL THE SILT FENCE ALONG THE CENTER OF THE PROPOSED BERM PLACEMENT. INSTALLATION SHOULD BE AS DESCRIBED IN DRAWING NO. EC-02 "SILT FENCE DETAIL".
- PLACE THE ROCK ALONG THE CENTER OF THE WIRE AND ON BOTH SIDES OF THE SILT FENCE TO THE DESIGNATED HEIGHT.
- WRAP THE STRUCTURE WITH THE PREVIOUSLY PLACED WIRE MESH SECURE ENOUGH SO THAT WHEN WALKED ACROSS THE STRUCTURE RETAINS IT'S SHAPE.
- SECURE WITH TIE WIRE.
- THE ROCK BERM SHOULD BE LEFT IN PLACE UNTIL ALL UPSTREAM AREAS ARE STABILIZED AND ACCUMULATED SILT REMOVED.

INSPECTION AND MAINTENANCE GUIDELINES:
- INSPECTION SHOULD BE MADE WEEKLY AND AFTER EACH RAINFALL EVENT BY THE CONTRACTOR. FOR THE INSTALLATIONS IN STREAMBEDS, ADDITIONAL DAILY INSPECTIONS SHOULD BE MADE ON ROCK BERM.
- REMOVE SEDIMENT AND OTHER DEBRIS WHEN BUILDUP REACHES 6 INCHES AND DISPOSE OF THE ACCUMULATED SILT IN AN APPROVED MANNER.
- REPAIR ANY LOOSE WIRE SHEATHING.
- THE BERM SHOULD BE RESHAPED AS NEEDED DURING INSPECTION.
- THE BERM SHOULD BE REPLACES WHEN THE STRUCTURE CEASES TO FUNCTION AS INTENDED DUE TO SILT ACCUMULATION AMONG THE ROCKS, WASHOUT, CONSTRUCTION TRAFFIC DAMAGE, ETC.

REVISION NOTE: ADOPTED 6/21/2006
CITY OF GEORGETOWN CONSTRUCTION STANDARDS AND DETAILS
HIGH SERVICE ROCK BERM DETAIL
DRAWING NAME: EC04 | SCALE: NTS | DATE: 1/2003 | DRAWN BY: MRS | APPROVED BY: TRB

DETAIL E
NTS

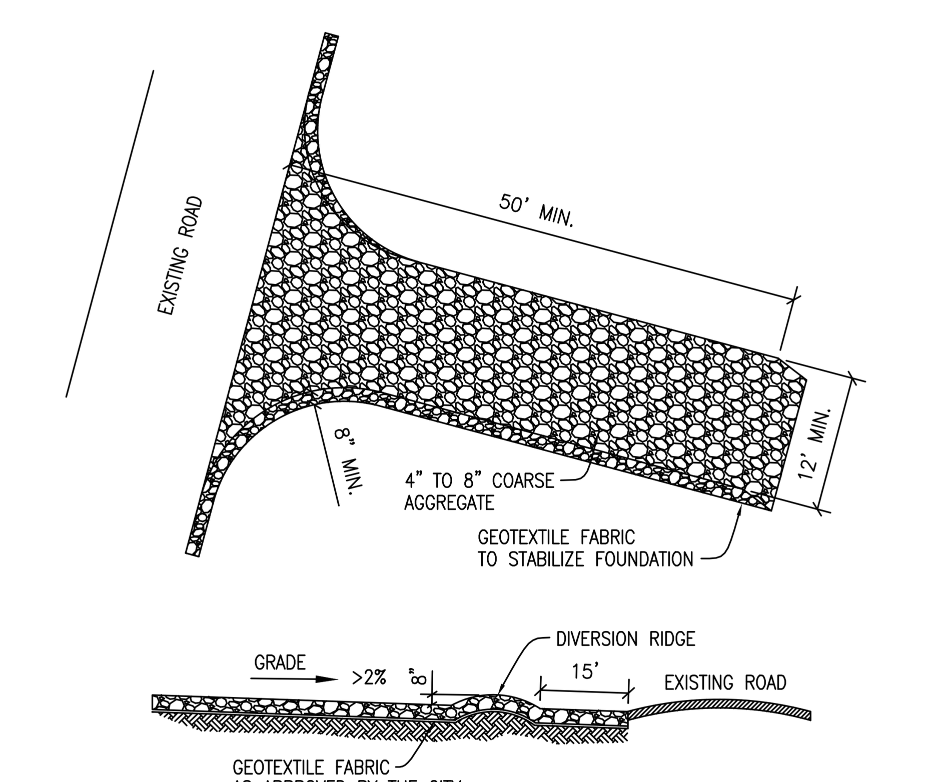

INSTALLATION:
- CLEAR THE AREA OF DEBRIS, ROCKS OR PLANTS THAT WILL INTERFERE WITH INSTALLATION.
- GRADE THE AREA FOR THE ENTRANCE TO FLOW BACK ON TO THE CONSTRUCTION SITE. RUNOFF FROM THE STABILIZED CONSTRUCTION
- PLACE GEOTEXTILE FABRIC AS APPROVED BY THE CITY.
- PLACE ROCK AS APPROVED BY THE CITY.

INSPECTIONS AND MAINTENANCE GUIDELINES:
- THE ENTRANCE SHOULD BE MAINTAINED IN A CONDITION, WHICH WILL PREVENT TRACKING OR FLOWING OF SEDIMENT ONTO PUBLIC RIGHTS-OF-WAY. THIS MAY REQUIRE PERIODIC TOP DRESSING WITH ADDITIONAL STONE AS CONDITIONS DEMAND AND REPAIR AND/OR CLEANOUT OF ANY MEASURES USED TO TRAP SEDIMENT.
- ALL SEDIMENT SPILLED, DROPPED, WASHED OR TRACKED ON TO PUBLIC RIGHTS-OF-WAY SHOULD BE REMOVED IMMEDIATELY BY CONTRACTOR.
- WHEN NECESSARY, WHEELS SHOULD BE CLEANED TO REMOVE SEDIMENT PRIOR TO ENTRANCE ONTO PUBLIC RIGHTS-OF-WAY.
- WHEN WASHING IS REQUIRED, IT SHOULD BE DONE ON AN AREA STABILIZED WITH CRUSHED STONE THAT DRAINS INTO AN APPROVED SEDIMENT TRAP OR SEDIMENT BASIN.
- ALL SEDIMENT SHOULD BE PREVENTED FROM ENTERING ANY STORM DRAIN, DITCH OR WATER COURSE BY USING APPROVED METHODS.

The Architect/Engineer assumes responsibility for appropriate use of this standard.

REVISION NOTE: ADOPTED 6/21/2006
CITY OF GEORGETOWN CONSTRUCTION STANDARDS AND DETAILS
STABILIZED CONSTRUCTION ENTRANCE
DRAWING NAME: EC06 | SCALE: NTS | DATE: 1/2003 | DRAWN BY: MRS | APPROVED BY: TRB

DETAIL F
NTS

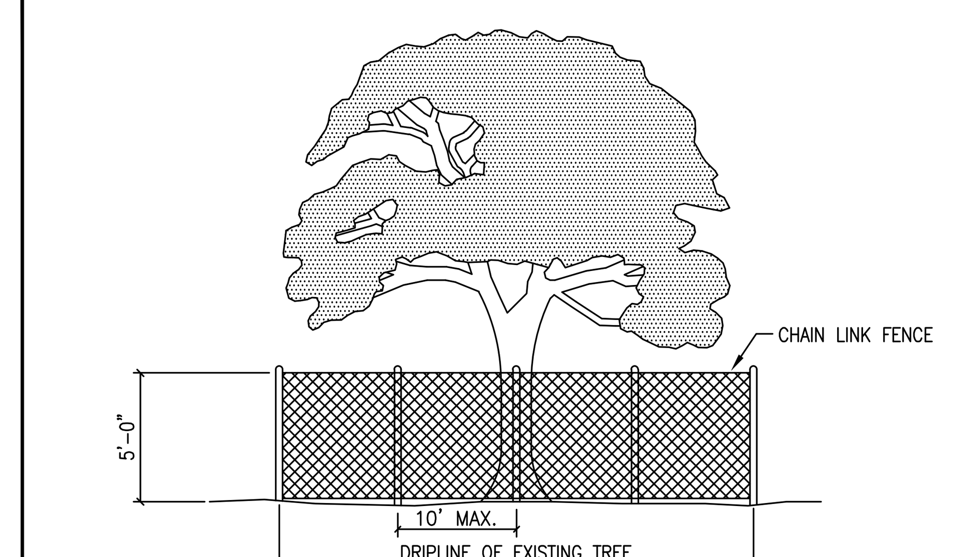

NOTES:
1. TREE PROTECTION FENCES SHALL BE INSTALLED PRIOR TO THE COMMENCEMENT OF ANY SITE PREPARATION WORK (CLEARING, GRUBBING OR GRADING).
2. FENCES SHALL COMPLETELY SURROUND THE TREE, OR CLUSTERS OF TREES; WILL BE LOCATED AT THE OUTERMOST LIMIT OF THE TREE BRANCHES (DRIPLINE), AND WILL BE MAINTAINED THROUGHOUT THE CONSTRUCTION PROJECT IN ORDER TO PREVENT THE FOLLOWING:
   A. SOIL COMPACTION IN THE ROOT ZONE AREA RESULTING FROM VEHICULAR TRAFFIC, OR STORAGE OF EQUIPMENT OR MATERIALS.
   B. ROOT ZONE DISTURBANCES DUE TO GRADE CHANGES (GREATER THAN SIX INCHES (6") CUT OR FILL, OR TRENCHING NOT REVIEWED AND AUTHORIZED BY THE CITY.
   C. WOUNDS TO EXPOSED ROOTS, TRUNKS OR LIMBS BY MECHANICAL EQUIPMENT.
   D. OTHER ACTIVITIES DETRIMENTAL TO TREES, SUCH AS CHEMICAL STORAGE, CEMENT TRUCK CLEANING AND FIRE.
3. EXCEPTIONS TO INSTALLING FENCES AT TREE DRIPLINES MAY BE PERMITTED IN THE FOLLOWING CASES:
   A. WHERE PERMEABLE PAVING IS TO BE INSTALLED, ERECT THE FENCE AT THE OUTER LIMITS OF THE PERMEABLE PAVING AREA.
   B. WHERE TREES ARE CLOSE TO PROPOSED BUILDINGS, ERECT THE FENCE NO CLOSER THAN SIX FEET (6'-0") TO BUILDING.

The Architect/Engineer assumes responsibility for appropriate use of this standard.

REVISION NOTE: ADOPTED 6/21/2006
CITY OF GEORGETOWN CONSTRUCTION STANDARDS AND DETAILS
TREE PROTECTION – CHAIN LINK FENCE
DRAWING NAME: EC09 | SCALE: NTS | DATE: 1/2003 | DRAWN BY: MRS | APPROVED BY: TRB

DETAIL G
NTS

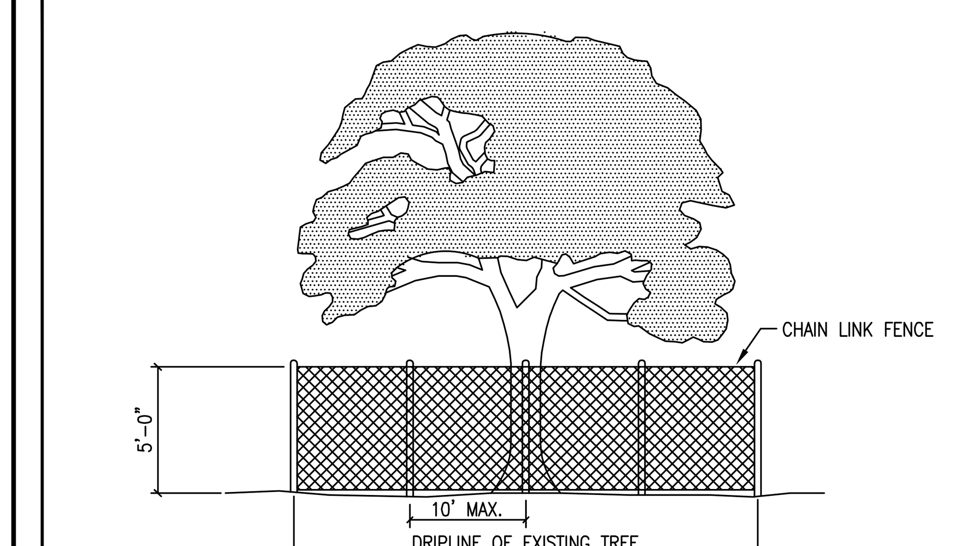

NOTES:
1. TREE PROTECTION FENCES SHALL BE INSTALLED PRIOR TO THE COMMENCEMENT OF ANY SITE PREPARATION WORK (CLEARING, GRUBBING OR GRADING).
2. FENCES SHALL COMPLETELY SURROUND THE TREE, OR CLUSTERS OF TREES; WILL BE LOCATED AT THE OUTERMOST LIMIT OF THE TREE BRANCHES (DRIPLINE), AND WILL BE MAINTAINED THROUGHOUT THE CONSTRUCTION PROJECT IN ORDER TO PREVENT THE FOLLOWING:
   A. SOIL COMPACTION IN THE ROOT ZONE AREA RESULTING FROM VEHICULAR TRAFFIC, OR STORAGE OF EQUIPMENT OR MATERIALS.
   B. ROOT ZONE DISTURBANCES DUE TO GRADE CHANGES (GREATER THAN SIX INCHES (6") CUT OR FILL, OR TRENCHING NOT REVIEWED AND AUTHORIZED BY THE CITY.
   C. WOUNDS TO EXPOSED ROOTS, TRUNKS OR LIMBS BY MECHANICAL EQUIPMENT.
   D. OTHER ACTIVITIES DETRIMENTAL TO TREES, SUCH AS CHEMICAL STORAGE, CEMENT TRUCK CLEANING AND FIRE.
3. EXCEPTIONS TO INSTALLING FENCES AT TREE DRIPLINES MAY BE PERMITTED IN THE FOLLOWING CASES:
   A. WHERE PERMEABLE PAVING IS TO BE INSTALLED, ERECT THE FENCE AT THE OUTER LIMITS OF THE PERMEABLE PAVING AREA.
   B. WHERE TREES ARE CLOSE TO PROPOSED BUILDINGS, ERECT THE FENCE NO CLOSER THAN SIX FEET (6'-0") TO BUILDING.

The Architect/Engineer assumes responsibility for appropriate use of this standard.

REVISION NOTE: ADOPTED 6/21/2006
CITY OF GEORGETOWN CONSTRUCTION STANDARDS AND DETAILS
TREE PROTECTION – CHAIN LINK FENCE
DRAWING NAME: EC09 | SCALE: NTS | DATE: 1/2003 | DRAWN BY: MRS | APPROVED BY: TRB

DETAIL H
NTS

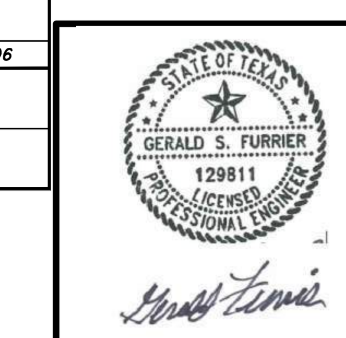

REV. NO.	DATE	DRWN	CHKD	REMARKS

DESIGNED BY: A.KAJALE
DRAWN BY: S MANISANKAR
SHEET CHK'D BY: ASHWIN G
CROSS CHK'D BY: A.RHAMES
APPROVED BY: G.FURRIER
DATE: APRIL 2024

CDM Smith
8310-1 N Capital of Texas Hwy, Suite 250
Austin, TX 78731
Tel: (512) 346-1100
TBPELS Firm Registration No. F-3043

CITY OF GEORGETOWN, TEXAS
SOUTH LAKE TO SOUTH FORK WASTEWATER IMPROVEMENTS

CIVIL STANDARD DETAILS I

PROJECT NO. 2048-272644
FILE NAME: C001STDT
SHEET NO. CD-1

Plotted: 5/3/2024 1:43:26 PM

XREFs: [CDMS_2234_South_lake_to_South_fork_Border_PP] Images: []
Last saved by: SAMDURAIM Time: 03-05-2024 18:42:27
pw:\\cdmsmith-az02-pw.bentley.com:pw_pl1\2048\272644\04 Design Services NM_50%\02 Civil\10 BIM_CADD\02 Details\South Lake to South fork\C001STDT.dwg
© 2022 CDM SMITH ALL RIGHTS RESERVED.
REUSE OF DOCUMENTS: THESE DOCUMENTS AND DESIGNS PROVIDED BY PROFESSIONAL SERVICE, INCORPORATED HEREIN, ARE THE PROPERTY OF CDM SMITH AND ARE NOT TO BE USED, IN WHOLE OR PART, FOR ANY OTHER PROJECT WITHOUT THE WRITTEN AUTHORIZATION OF CDM SMITH.

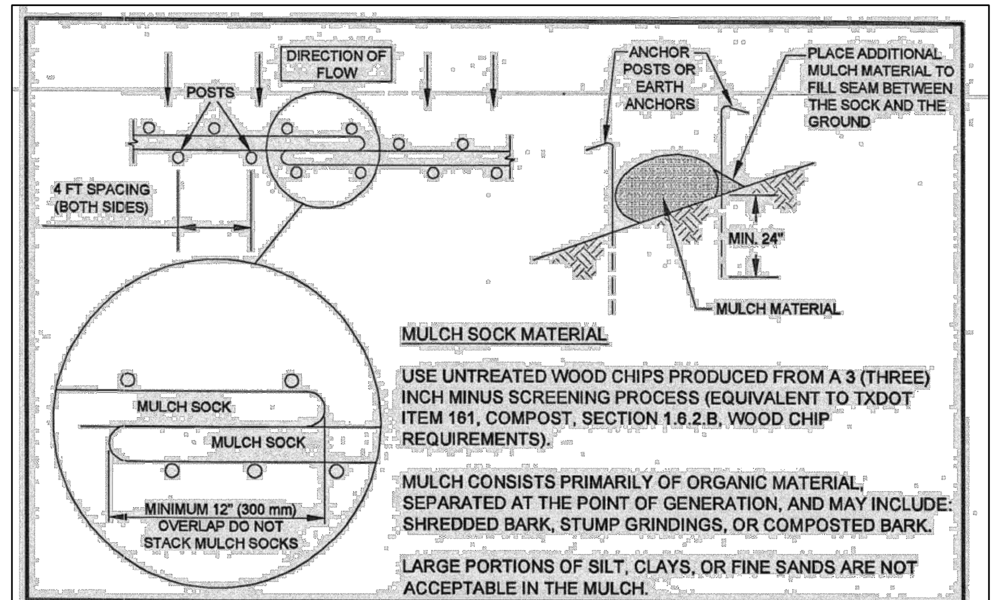

MULCH SOCK MATERIAL

USE UNTREATED WOOD CHIPS PRODUCED FROM A 3 (THREE) INCH MINUS SCREENING PROCESS (EQUIVALENT TO TXDOT ITEM 161, COMPOST, SECTION 1.6.2.B, WOOD CHIP REQUIREMENTS).

MULCH CONSISTS PRIMARILY OF ORGANIC MATERIAL, SEPARATED AT THE POINT OF GENERATION, AND MAY INCLUDE: SHREDDED BARK, STUMP GRINDINGS, OR COMPOSTED BARK.

LARGE PORTIONS OF SILT, CLAYS, OR FINE SANDS ARE NOT ACCEPTABLE IN THE MULCH.

NOTES:

1. STEEL OR WOOD POSTS WHICH SUPPORT THE MULCH SOCK SHALL BE INSTALLED ON A SLIGHT ANGLE TOWARD THE ANTICIPATED RUNOFF SOURCE. POST MUST BE EMBEDDED A MINIMUM OF 600mm (24 inches). IF WOOD POSTS CANNOT ACHIEVE 600mm (24 inches) DEPTH, USE STEEL POSTS. EARTH ANCHORS ARE ALSO ACCEPTABLE.
2. THE TOE OF THE MULCH SOCK SHALL BE PLACED SO THAT THE MULCH SOCK IS FLAT AND PERPENDICULAR TO THE LINE OF FLOW. IN ORDER TO PREVENT WATER FROM FLOWING BETWEEN THE JOINTS OF ADJACENT ENDS OFMULCH SOCKS, LAP THE ENDS OF ADJACENT MULCH SOCKS A MINIMUM OF 300mm (12 inches).
3. MULCH MATERIAL MUST BE FREE OF REFUSE, PHYSICAL CONTAMINANTS, AND MATERIAL TOXIC TO PLANT GROWTH; IT IS NOT ACCEPTABLE FOR THE MULCH MATERIAL TO CONTAIN GROUND CONSTRUCTION DEBRIS, BIOSOLIDS, OR MANURE.
4. SOCK MATERIAL WILL BE 100% BIODEGRADABLE, PHOTODEGRADABLE, OR RECYCLABLE SUCH AS BURLAP, TWINE, UV PHOTOBIODEGRADABLE PLASTIC, POLYESTER, OR ANY OTHER ACCEPTABLE MATERIAL.
5. MULCH SOCKS SHOULD BE USED AT THE BASE OF SLOPES NO STEEPER THAN 2:1 AND SHOULD NOT EXCEED THE MAXIMUM SPACING CRITERIA PROVIDED IN CITY OF AUSTIN ENVIRONMENTAL CRITERIA MANUAL TABLE 1.4.5.F.1 FOR A GIVEN SLOPE CATEGORY.
6. ACCUMULATED SILT SHALL BE REMOVED WHEN IT REACHES A DEPTH OF 150mm (6 inches). THE SILT SHALL BE DISPOSED OF ON AN APPROVED SITE AND IN SUCH A MANNER THAT WILL NOT CONTRIBUTE TO ADDITIONAL SILTATION.

CITY OF AUSTIN
WATERSHED PROTECTION DEPARTMENT

MULCH SOCK

08/24/2010 ADOPTED

THE ARCHITECT/ENGINEER ASSUMES RESPONSIBILITY FOR APPROPRIATE USE OF THIS STANDARD.

STANDARD NO. 648S-1

DETAIL A
NTS

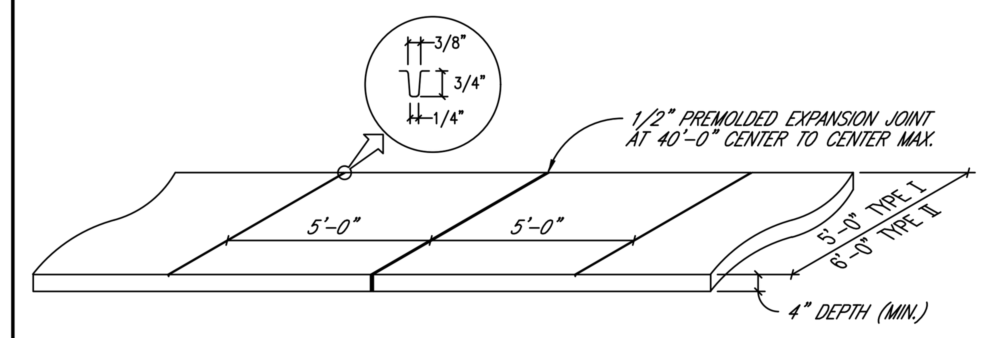

TYPE I – AS REQUIRED FOR SINGLE FAMILY, DUPLEXES AND TOWNHOUSES.
TYPE II – AS REQUIRED FOR APARTMENTS, OFFICE AND PARKING LOTS, COMMERCIAL AND INDUSTRIAL.

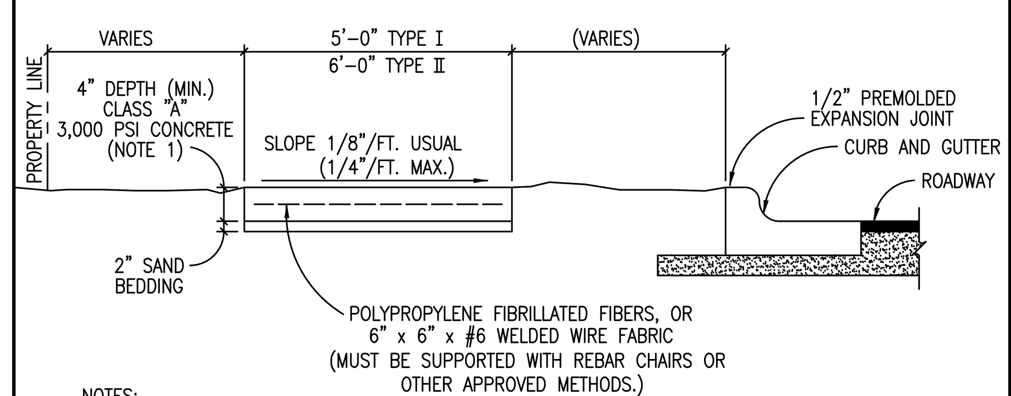

NOTES:

1. FOR ROLLER STAMPED SIDEWALK: MATCH TO SPECIFICATIONS.
2. STANDARD LOCATION OF SIDEWALK IS OFF BACK OF CURB. SPECIAL DESIGNS MAY BE APPROVED BY THE CITY ENGINEER, PRIOR TO FINAL DESIGN.
3. SIDEWALK SHALL CONFORM TO CURRENT AMERICANS WITH DISABILITIES ACT STANDARDS.
4. IF REQUIRED ALL SIDEWALKS SHALL BE SUBMITTED AND APPROVED BY THE TEXAS DEPARTMENT OF LICENSING AND REGULATION BY THE ENGINEER RECORD.
5. ANY VARIANCE IN TEXTURE, GRADE OR ALIGNMENT MUST BE APPROVED BY THE TEXAS DEPARTMENT OF LICENSING AND REGULATION.

The Architect/Engineer assumes responsibility for appropriate use of this standard.

REVISION NOTE: ADOPTED 6/21/2006

CITY OF GEORGETOWN
CONSTRUCTION STANDARDS AND DETAILS
SIDEWALK SECTION AND JOINT DETAIL

DRAWING NAME: SD14
SCALE: NTS DATE: 1/2003
DRAWN BY: MRS APPROVED BY: TRB

DETAIL B
NTS

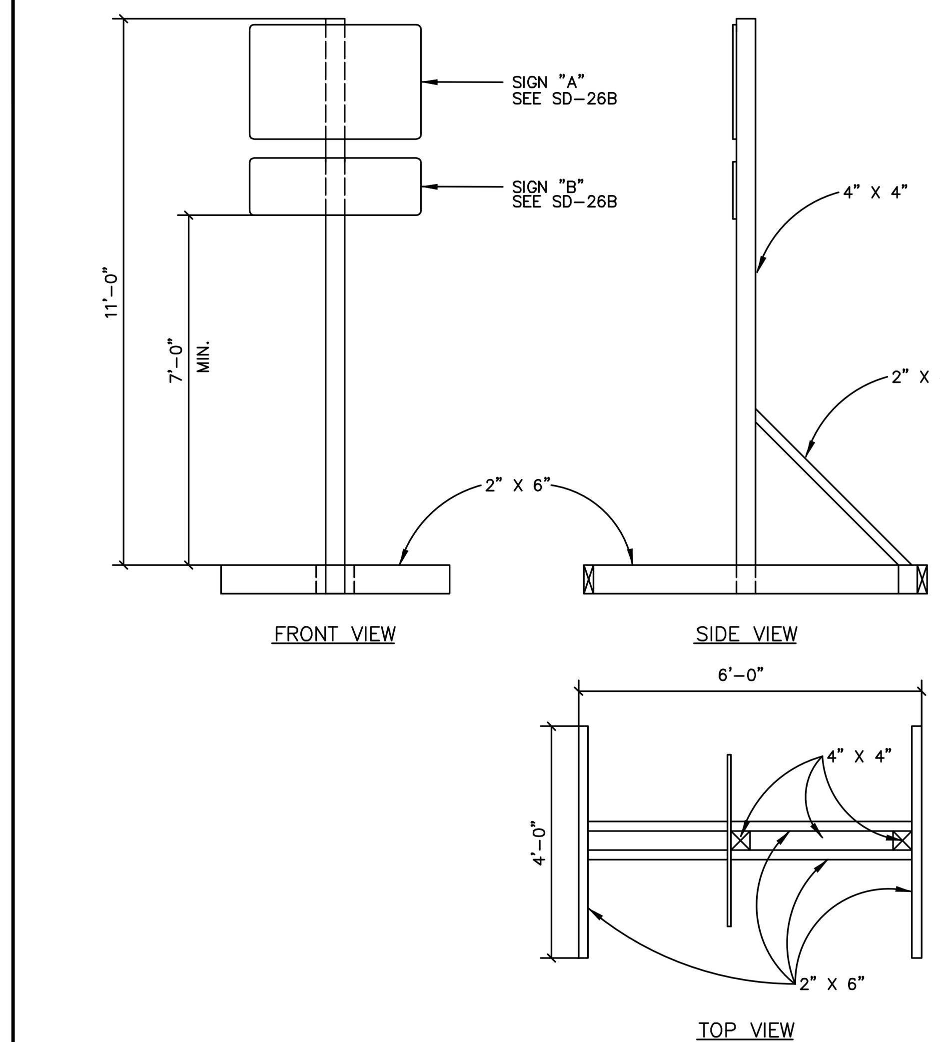

NOTES:

1. ALL MATERIALS SHALL BE FURNISHED BY THE CONTRACTOR WITH THE EXCEPTION OF THE CITY OF GEORGETOWN G.U.S. LOGO WHICH WILL BE FURNISHED BY THE CITY.
2. ALL SIGNS TO BE IN CONFORMANCE WITH THE CURRENT EDITION OF THE TEXAS MANUAL OF UNIFORM TRAFFIC CONTROL DEVICES (TMUTCD).

The Architect/Engineer assumes responsibility for appropriate use of this standard.

REVISION NOTE: ADOPTED 6/21/2006

CITY OF GEORGETOWN
CONSTRUCTION STANDARDS AND DETAILS
PROJECT SIGN TYPE II

DRAWING NAME: SD26
SCALE: NTS DATE: 1/2003
DRAWN BY: MRS APPROVED BY: TRB

DETAIL C
NTS

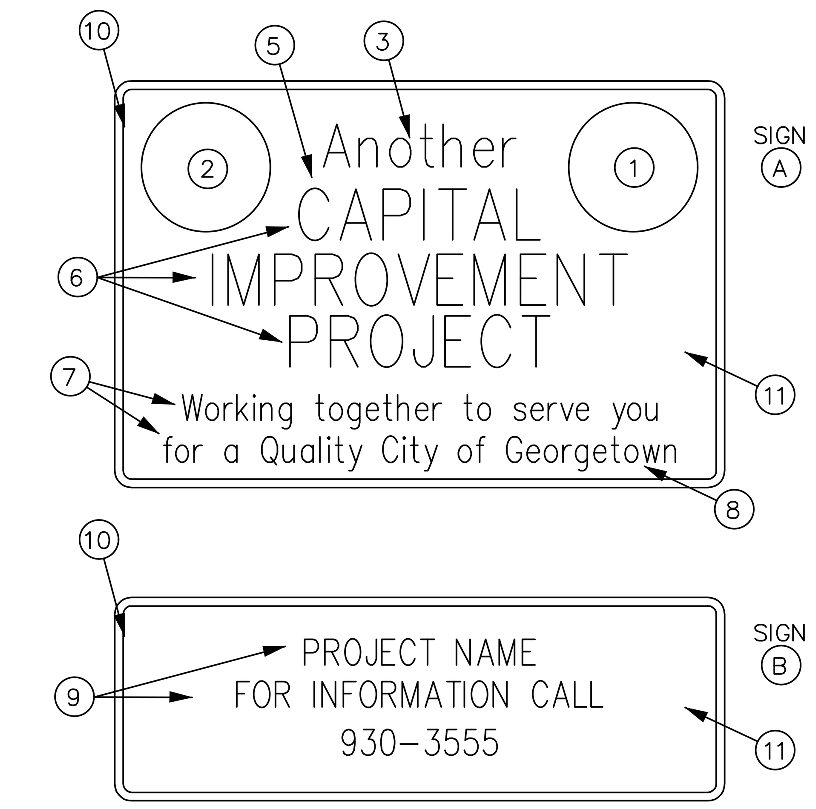

NOTES:

1. CITY SEAL (FURNISHED BY THE CITY)
2. G.U.S. LOGO (FURNISHED BY THE CITY)
3. (1 3/4") BLUE LETTERS
4. (2 1/2") BLUE LETTERS
5. (1 1/4") SPACE
6. (3") BLUE LETTERS
7. (2") RED UPPER, (1 1/2") RED LOWER CASE LETTERS
8. (2") BLUE UPPER, (1 1/2") BLUE LOWER CASE LETTERS (City of Georgetown)
9. (10") LETTERS
10. (1 3/8") BLUE BORDER
11. REFLECTIVE SILVER SHEETING .080 ALUMINUM 2290, TRANSPARENT RED PAINT 712, BLUE PAINT 710, 3M CO. OR APPROVED EQUIVALENT.
12. REFER TO SHEET SD-26A

The Architect/Engineer assumes responsibility for appropriate use of this standard.

REVISION NOTE: ADOPTED 6/21/2006

CITY OF GEORGETOWN
CONSTRUCTION STANDARDS AND DETAILS
STANDARD STREET SIGN DETAIL II

DRAWING NAME: SD27
SCALE: NTS DATE: 1/2003
DRAWN BY: MRS APPROVED BY: TRB

DETAIL D
NTS

The Architect/Engineer assumes responsibility for appropriate use of this standard.

NOTES:

1. COMMERCIAL SIDEWALKS WIDTHS – 6'
RESIDENTIAL SIDEWALKS WIDTHS – 5'
2. ALL SLOPES ARE MAXIMUM ALLOWABLE. FLATTER SLOPES THAT WILL STILL DRAIN PROPERLY ARE ENCOURAGED.
3. ALL CONCRETE SURFACES SHALL RECEIVE A LIGHT BROOM FINISH UNLESS NOTED OTHERWISE IN THE PLANS.
4. FOR PURPOSES OF WARNING, THE CURB RAMPS SHALL HAVE A LIGHT REFLECTIVE VALUE AND TEXTURE THAT SIGNIFICANTLY CONTRASTS WITH THAT OF ADJOINING PEDESTRIAN ROUTES.
5. TEXTURES MAY CONSIST OF PAVERS WITH TRUNCATED DOMED SURFACES OR GROOVES. TEXTURES ARE REQUIRED TO BE DETECTABLE UNDERFOOT. SURFACES THAT WOULD ALLOW WATER TO ACCUMULATE ARE PROHIBITED.
6. COLOR CONTRAST, FOR EXAMPLE, CAN BE ACCOMPLISHED WITH COLORED CONCRETE PAVERS THAT HAVE TRUNCATED DOMES OR BY COLORED STAINED CONCRETE WITH GROOVES, EITHER OF WHICH WOULD PROVIDE A CONTRAST WITH TYPICALLY LIGHT COLORED CONCRETE.
7. ADDITIONAL INFORMATION ON CURB RAMP LOCATION, DESIGN, VISIBILITY AND TEXTURE MAY BE FOUND IN THE CURRENT EDITION OF THE TEXAS ACCESSIBILITY STANDARDS (TAS) PREPARED AND ADMINISTERED BY THE TEXAS DEPARTMENT OF LICENSING AND REGULATION (TDLR).
8. RAISED MEDIANS SEPARATE OPPOSING DIRECTIONS OF TRAFFIC AND PROVIDE A REFUGE AREA FOR PEDESTRIANS IF THEY ARE UNABLE TO CROSS THE ENTIRE ROADWAY IN THE ALLOTTED SIGNAL PHASE. TO SERVE AS A REFUGE AREA, THE MEDIAN SHOULD BE A MINIMUM OF 4 FEET WIDE. MEDIANS SHOULD BE DESIGNED TO PROVIDE ACCESSIBLE PASSAGE OVER OR THROUGH THEM.
9. ALL SIDEWALK PLANS AND DETAILS SHALL BE SUBMITTED AND APPROVED BY THE TEXAS DEPARTMENT OF LICENSING AND REGUALTION (TDLR).
10. ANY PART OF THE ACCESSIBLE ROUTE WITH A SLOPE GRATER THAN 1:20 (5%) SHALL BE CONSIDERED A RAMP. IF A RAMP HAS A RISE GREATER THAN 6 INCHES OR A HORIZONTAL PROJECTION GREATER THAN 72 INCHES, THEN IT SHALL HAVE HANDRAILS ON BOTH SIDES. THE ONLY EXCEPTION IS AT CURB RAMPS. HANDRAILS ARE NOT REQUIRED ON CURB RAMPS. CURB RAMPS SHALL BE PROVIDED WHERE EVER AN ACCESSIBLE ROUTE CROSSES (PENETRATES) A CURB. CURB RAMPS ARE GENERALLY INTERPRETED AS ONLY THE PORTION TYING DIRECTLY INTO THE ROADWAY.
11. TRAFFIC SIGNAL OR ILLUMINATION POLES, GROUND BOXES, CONTROLLER BOXES, SIGNS, DRAINAGE FACILITIES AND OTHER ITEMS SHALL BE PLACED SO NOT TO OBSTRUCT THE ACCESSIBLE ROUTE.
12. ALL SIDEWALKS WILL BE DOWELED INTO EXISTING SIDEWALKS, DRIVEWALKS, DRIVEWAYS, INLET BOXES, RETAINING WALLS, ETC.
13. ALL SIDEWALK CROSS-SLOPES SHALL NOT EXCEED 1:50, UNLESS A VARIANCE IS PROVIDED BY TDLR.

REVISION NOTE: ADOPTED 6/21/2006

CITY OF GEORGETOWN
CONSTRUCTION STANDARDS AND DETAILS
PEDESTRIAN RAMPS GENERAL NOTES

DRAWING NAME: SD28
SCALE: NTS DATE: 1/2003
DRAWN BY: MRS APPROVED BY: TRB

DETAIL E
NTS

STANDARD CASTING AND COVER, AS SPECIFIED. (BOLTED WHERE SHOWN ON PLANS)

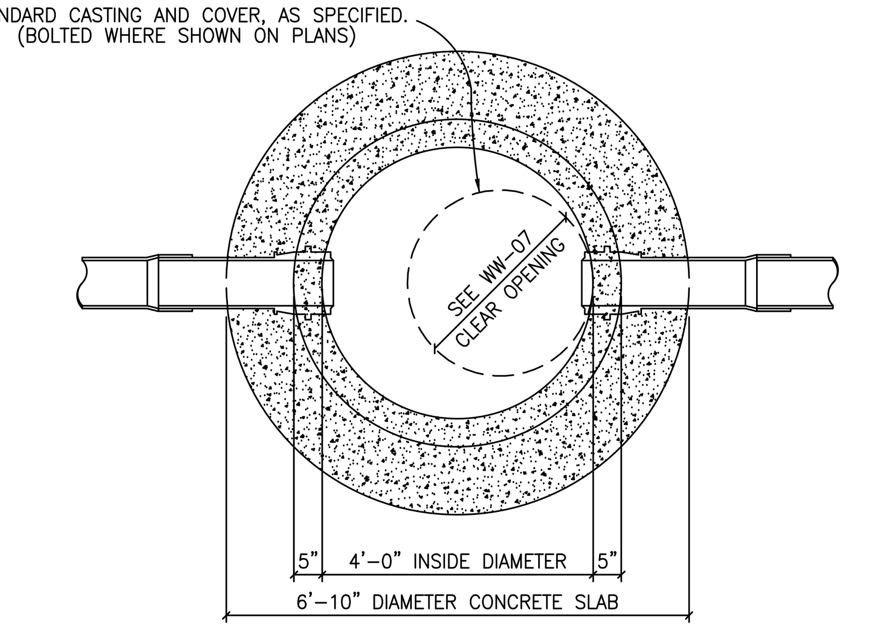

SEE DETAIL WW-03

MANHOLE PLAN

CITY OF GEORGETOWN NOTES:

MANHOLE DETAILS SHALL REFLECT THE CITY'S MINIMUM SPECIFICATIONS, AS STATED BELOW:

A. ALL MANHOLES SHALL BE 48" I.D., R.C.P., CLASS III, WITH RUBBER PROFILE GASKET – SINGLE OFF-SET JOINT CONFORMING TO ASTM C478, C433 AND C76.
B. ALL MANHOLES SHALL HAVE FRAME AND COVER, AS MANUFACTURED BY EAST JORDAN IRON WORKS (AS PER DETAIL # WW-07) OR APPROVED EQUIVALENT.
C. ALL MANHOLES SHALL BE CONCRETE WITH CAST IRON FRAME AND COVER.
D. ALL MANHOLES SHALL HAVE AN ECCENTRIC CONE.
E. MANHOLES MAY HAVE A FLAT LID, IF APPROVED BY CITY OF GEORGETOWN, BEING 12" THICK WITH A MINIMUM 30" OPENING, AS MANUFACTURED BY HANSEN PIPE AND PRECAST OR APPROVED EQUAL M.F.G. CONFORMING TO ASTM C478, 5000 P.S.I. CONCRETE, TRAFFIC BEARING AND WITH PROFILE GASKET – SINGLE OFF-SET JOINT CONFORMING TO ASTM C443.
F. INVERTS AND FLEXIBLE SEAL BOOTS, PER ASTM C-923, SHALL BE CAST INTO BASE SECTION.
G. MINIMUM DROP BETWEEN INVERTS SHALL BE ONE-TENTH OF A FOOT (0.1').
H. GRADE RINGS WITH AN I.D. TO MATCH FRAMES CLEAR OPENING WITH A MAXIMUM ADJUSTMENT OF 12" ARE ALLOWED.

The Architect/Engineer assumes responsibility for appropriate use of this standard.

REVISION NOTE: ADOPTED 6/21/2006

CITY OF GEORGETOWN
CONSTRUCTION STANDARDS AND DETAILS
STANDARD MANHOLE – PLAN

DRAWING NAME: WW02
SCALE: NTS DATE: 1/2003
DRAWN BY: MRS APPROVED BY: TRB

DETAIL F
NTS

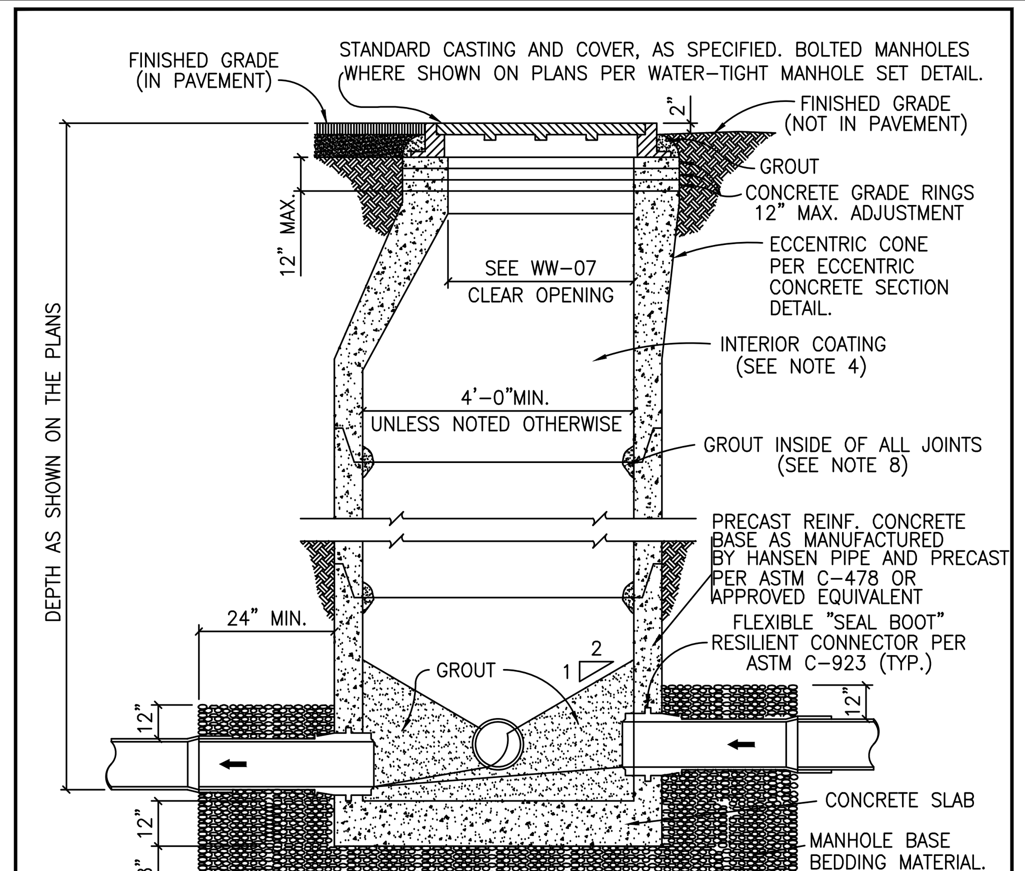

NOTES:

1. MANHOLES SHALL BE PRECAST ASTM C-478 BELL AND SPIGOT WITH PROFILE GASKET – SINGLE OFF-SET JOINTS.
2. SEE PLANS AND MANHOLE SCHEDULE, FOR MANHOLE SIZE, LOCATION, CONFIGURATION, TYPE OF TOP SECTION, VENTING REQUIREMENTS, PIPE SIZE AND TYPES.
3. SEE SPECIFICATIONS ON MATERIALS AND CONSTRUCTION.
4. AN 80 MIL. COAT OF RAVEN LINING SYSTEMS, RAVEN 405 ULTRA HIGH BUILD EPOXY COATING, OR SPRAY WALL EPOXY COATING, OR APPROVED EQUAL, TO BE APPLIED TO ENTIRE INTERIOR OF EACH WASTEWATER MANHOLE AND UNDERSIDE OF FLAT TOPS.
5. ALL MANHOLE COVERS SHALL BE BOLTED AND GASKETTED WHEN MANHOLES ARE LOCATED OUT FROM PAVEMENT.
6. MANHOLES TO BE VENTED ARE IDENTIFIED ON MANHOLE SCHEDULE. REFERENCE MANHOLE VENT DETAIL.
7. MANHOLES ARE TO BE DESIGNED TO RESIST LATERAL AND VERTICAL SOIL FORCES RESULTING FROM MANHOLE DEPTH. ADDITIONALLY, MANHOLES LOCATED IN PAVEMENT TO BE DESIGNED FOR HS-20 TRAFFIC LOADS.
8. GROUT SHALL MEET THE REQUIREMENTS AS STATED BY THE COATING MANUFACTURER.
9. MANHOLE BASE BEDDING MATERIAL SPECS. FOR 3/4" WASHED GRAVEL:
SIEVE SIZE 2", PERCENT (%) RETAINED 0
SIEVE SIZE 1 1/2", % RETAINED 0-10
SIEVE SIZE 1", % RETAINED 45-80
SIEVE SIZE 3/4", % RETAINED 85-100
SIEVE SIZE 3/8", % RETAINED 95-100

The Architect/Engineer assumes responsibility for appropriate use of this standard.

REVISION NOTE: ADOPTED 6/21/2006

CITY OF GEORGETOWN
CONSTRUCTION STANDARDS AND DETAILS
STANDARD MANHOLE – SECTION

DRAWING NAME: WW03
SCALE: NTS DATE: 1/2003
DRAWN BY: MRS APPROVED BY: TRB

DETAIL G
NTS

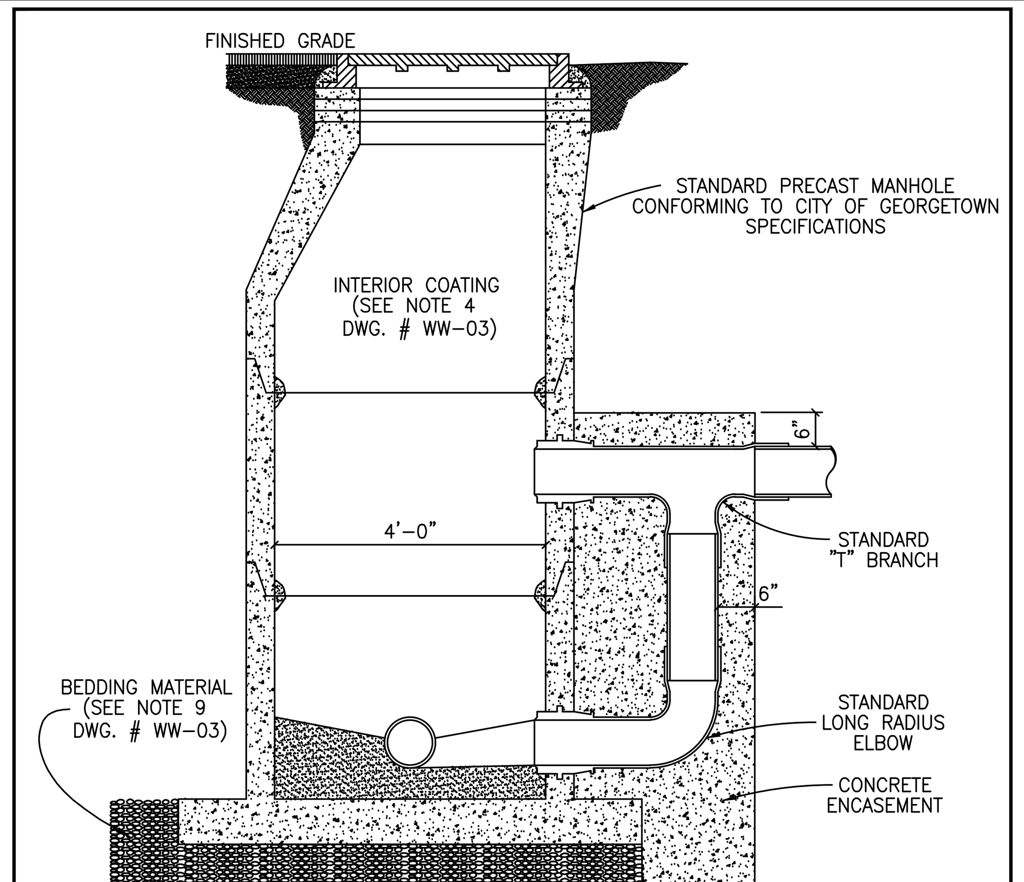

NOTES:

1. CONCRETE ENCASEMENT FOR DROP CONNECTION TO BE POURED INTEGRALLY WITH BOTH MANHOLE SLAB AND WALL.
2. DROP CONNECTIONS SHALL BE REQUIRED WHENEVER AN INFLUENT SEWER IS LOCATED TWO FEET (2') OR MORE ABOVE THE MAIN INVERT CHANNEL.
3. A FLOW CHANNEL SHALL BE CONSTRUCTED INSIDE MANHOLE TO DIRECT INFLUENT INTO FLOW STREAM.
4. WHEN P.V.C. IS USED IN SANITARY SEWER LINES, SOLVENT TYPE JOINT P.V.C. FITTINGS MAY BE UTILIZED IN THE DROP ASSEMBLY ONLY.
5. MINIMUM PIPE SIZE FOR DROP IS EIGHT INCHES (8").
6. SEE STANDARD MANHOLE DETAIL (DWG. # WW-03) FOR ADDITIONAL REQUIREMENTS.

The Architect/Engineer assumes responsibility for appropriate use of this standard.

REVISION NOTE: ADOPTED 6/21/2006

CITY OF GEORGETOWN
CONSTRUCTION STANDARDS AND DETAILS
DROP CONNECTION–PRECAST MANHOLE TYPE "A"

DRAWING NAME: WW04
SCALE: NTS DATE: 1/2003
DRAWN BY: MRS APPROVED BY: TRB

DETAIL H
NTS

04/30/2024

Plotted: 5/3/2024 1:45:24 PM

REV. NO.	DATE	DRWN	CHKD	REMARKS

DESIGNED BY: A.KAJALE
DRAWN BY: S. MANISANKAR
SHEET CHK'D BY: ASHWIN G
CROSS CHK'D BY: A.RHAMES
APPROVED BY: G.FURRIER
DATE: APRIL 2024

CDM Smith
8310-1 N Capital of Texas Hwy, Suite 250
Austin, TX 78731
Tel: (512) 346-1100
TBPELS Firm Registration No. F-3043

CITY OF GEORGETOWN, TEXAS

SOUTH LAKE TO SOUTH FORK WASTEWATER IMPROVEMENTS

CIVIL STANDARD DETAILS II

PROJECT NO. 2048-272644
FILE NAME: C002STDT
SHEET NO. CD-2

XREFs: [CDMS_2234_South_lake_to_South_fork_Border_PP] Images: []
Last saved by: SAMIDURAIM Time: 03-05-2024 18:42:50
pw:\\cdmsmith-az02-pw.bentley.com:pw_p01\2048\272644\04 Design Services NM_50%\02 Civil\10 BIM_CADD\02 Details\South Lake to South fork\C002STDT.dwg
© 2022 CDM SMITH ALL RIGHTS RESERVED.
REUSE OF DOCUMENTS: THESE DOCUMENTS AND DESIGNS PROVIDED BY PROFESSIONAL SERVICE, INCORPORATED HEREIN, ARE THE PROPERTY OF CDM SMITH AND ARE NOT TO BE USED, IN WHOLE OR PART, FOR ANY OTHER PROJECT WITHOUT THE WRITTEN AUTHORIZATION OF CDM SMITH.

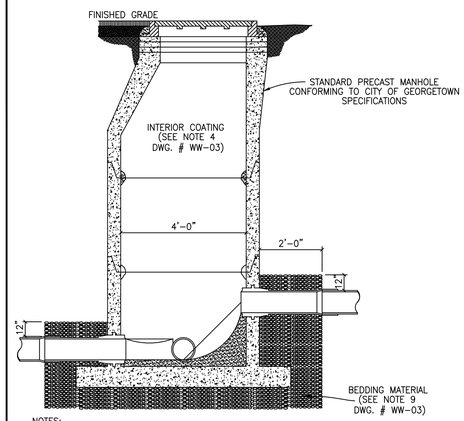

NOTES:

1. TO BE USED WHERE DROP IS SIX INCHES (6") TO TWO FEET (2'-0").
2. A FLOW CHANNEL SHALL BE CONSTRUCTED INSIDE MANHOLE TO DIRECT INFLUENT INTO FLOW STREAM.
3. CONSTRUCTION OF DROP SHALL PROVIDE AN OVERSIZED SLAB TO EXTEND UNDER THE DROP CONNECTION.
4. MINIMUM PIPE SIZE FOR DROP IS EIGHT INCHES (8").
5. SEE STANDARD MANHOLE DETAIL (DWG. # WW-03) FOR ADDITIONAL REQUIREMENTS.

The Architect/Engineer assumes responsibility for appropriate use of this standard.

REVISION NOTE: ADOPTED 6/21/2006

CITY OF GEORGETOWN
CONSTRUCTION STANDARDS AND DETAILS
DROP CONNECTION–PRECAST MANHOLE TYPE "B"

DRAWING NAME: WW05
SCALE: NTS | DATE: 1/2003
DRAWN BY: MRS | APPROVED BY: TRB

DETAIL A
NTS

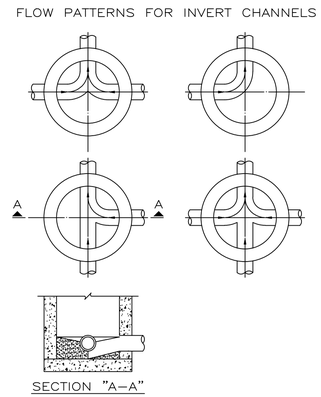

NOTES:

1. INVERT CHANNELS TO BE CONSTRUCTED FOR SMOOTH FLOW WITH NO OBSTRUCTIONS.
2. SPILLWAYS SHALL BE CONSTRUCTED BETWEEN PIPES WITH DIFFERENT INVERT ELEVATIONS PROVIDING FOR SMOOTH FLOW.
3. CHANNELS FOR FUTURE CONSTRUCTIONS (STUBS) SHALL BE CONSTRUCTED, FILLED WITH SAND, AND COVERED WITH 1" OF MORTAR.
4. SLOPE MANHOLE ITSELF WITH A 1:2 SLOPE FROM MANHOLE WALL TO CHANNEL.
5. INVERT SHALL BE A MINIMUM OF 1/2 THE DIAMETER OF THE LARGEST PIPE OR 4" DEEP.

The Architect/Engineer assumes responsibility for appropriate use of this standard.

REVISION NOTE: ADOPTED 6/21/2006

CITY OF GEORGETOWN
CONSTRUCTION STANDARDS AND DETAILS
FLOW PATTERNS FOR INVERT CHANNELS

DRAWING NAME: WW06
SCALE: NTS | DATE: 1/2003
DRAWN BY: MRS | APPROVED BY: TRB

DETAIL B
NTS

The Architect/Engineer assumes responsibility for appropriate use of this standard.

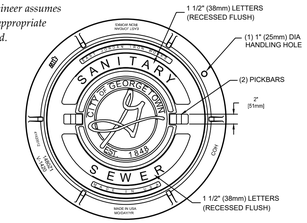

COVER SECTION

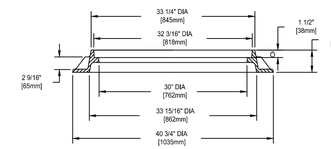

FRAME SECTION

NOTES:

1. STANDARD WASTEWATER MANHOLE SET TO BE EAST JORDAN IRON WORKS, INC. CATALOG NO. 1480A V–1420/1480Z1, COVER TO BE STAMPED WITH "SANITARY SEWER".
2. STANDARD WASTEWATER MANHOLE SET TO BE HEAVY DUTY LOAD RATED.
3. FOR MORE DETAILED SPECIFICATIONS REFER TO EAST JORDAN IRON WORKS, INC. REFERENCE PRODUCT DRAWING 41420012 00148390.
4. FOR BOLTED WASTEWATER MANHOLE SET REFER TO DETAIL WW07A.

REVISION NOTE: ADOPTED 6/21/2006

CITY OF GEORGETOWN
CONSTRUCTION STANDARDS AND DETAILS
STANDARD WASTEWATER MANHOLE SET

DRAWING NAME: WW07
SCALE: NTS | DATE: 1/2003
DRAWN BY: MRS | APPROVED BY: TRB

DETAIL C
NTS

The Architect/Engineer assumes responsibility for appropriate use of this standard.

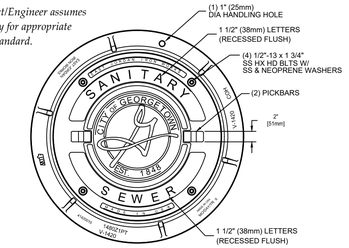

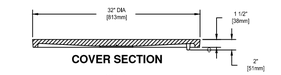

COVER SECTION

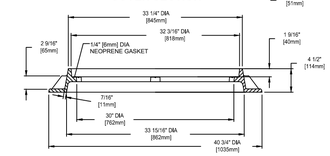

FRAME SECTION

NOTES:

1. BOLTED WASTEWATER MANHOLE SET TO BE EAST JORDAN IRON WORKS, INC. CATALOG NO. 1480APT V–1420/1480Z1PT, COVER TO BE STAMPED WITH "SANITARY SEWER".
2. BOLTED WASTEWATER MANHOLE SET TO BE HEAVY DUTY LOAD RATED.
3. FOR MORE DETAILED SPECIFICATIONS REFER TO EAST JORDAN IRON WORKS, INC. REFERENCE PRODUCT DRAWING 00148392 41420015.
4. FOR STANDARD WASTEWATER MANHOLE SET REFER TO DETAIL WW07.

REVISION NOTE: ADOPTED 6/21/2006

CITY OF GEORGETOWN
CONSTRUCTION STANDARDS AND DETAILS
BOLTED WASTEWATER MANHOLE SET

DRAWING NAME: WW07A
SCALE: NTS | DATE: 1/2006
DRAWN BY: MRS | APPROVED BY: TRB

DETAIL D
NTS

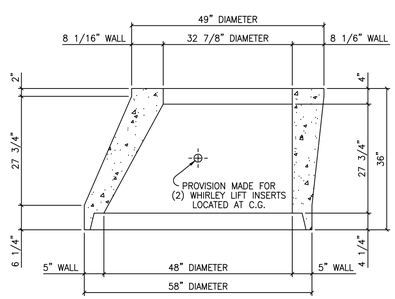

The Architect/Engineer assumes responsibility for appropriate use of this standard.

REVISION NOTE: ADOPTED 6/21/2006

CITY OF GEORGETOWN
CONSTRUCTION STANDARDS AND DETAILS
48"X5" TO 33"X8"X36" TALL ECCENTRIC CONCRETE SECTION

DRAWING NAME: WW08
SCALE: NTS | DATE: 1/2003
DRAWN BY: MRS | APPROVED BY: TRB

DETAIL E
NTS

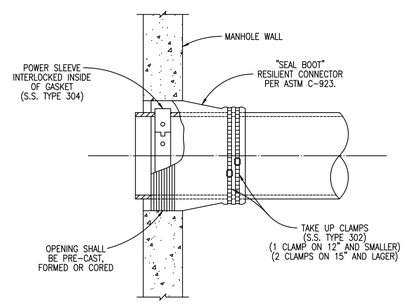

The Architect/Engineer assumes responsibility for appropriate use of this standard.

REVISION NOTE: ADOPTED 6/21/2006

CITY OF GEORGETOWN
CONSTRUCTION STANDARDS AND DETAILS
FLEXIBLE "SEAL BOOT" CONNECTOR

DRAWING NAME: WW10
SCALE: NTS | DATE: 1/2003
DRAWN BY: MRS | APPROVED BY: TRB

DETAIL F
NTS

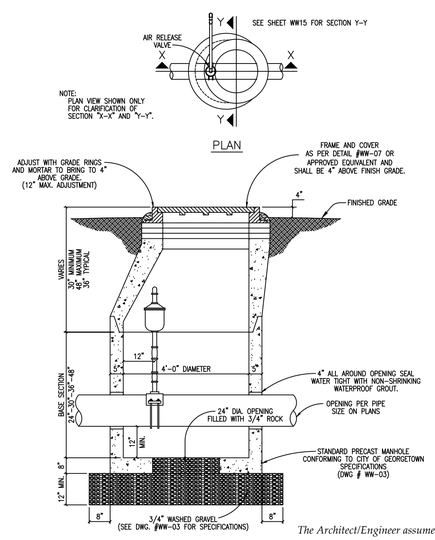

The Architect/Engineer assumes responsibility for appropriate use of this standard.

REVISION NOTE: ADOPTED 6/21/2006

CITY OF GEORGETOWN
CONSTRUCTION STANDARDS AND DETAILS
STANDARD AIR RELEASE VALVE FOR FORCE MAIN

DRAWING NAME: WW14
SCALE: NTS | DATE: 1/2003
DRAWN BY: MRS | APPROVED BY: TRB

DETAIL G
NTS

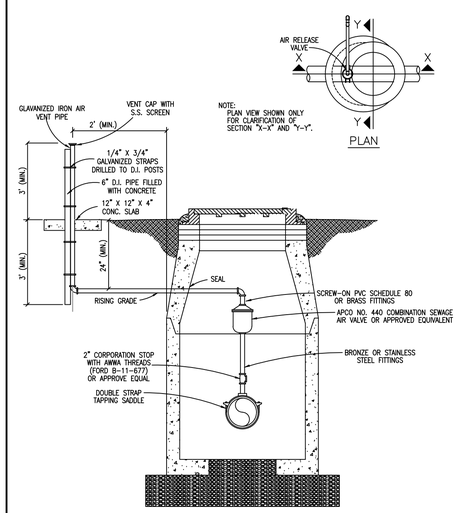

The Architect/Engineer assumes responsibility for appropriate use of this standard.

REVISION NOTE: ADOPTED 6/21/2006

CITY OF GEORGETOWN
CONSTRUCTION STANDARDS AND DETAILS
STANDARD AIR RELEASE VALVE FOR FORCE MAIN

DRAWING NAME: WW15
SCALE: NTS | DATE: 1/2003
DRAWN BY: MRS | APPROVED BY: TRB

DETAIL H
NTS

STATE OF TEXAS
GERALD S. FURRIER
129811
LICENSED
PROFESSIONAL ENGINEER
04/30/2024

REV. NO.	DATE	DRWN	CHKD	REMARKS

DESIGNED BY: A.KAJALE
DRAWN BY: S MANISANKAR
SHEET CHK'D BY: ASHWIN G
CROSS CHK'D BY: A.RHANES
APPROVED BY: G.FURRIER
DATE: APRIL 2024

CDM Smith
8310-1 N Capital of Texas Hwy, Suite 250
Austin, TX 78731
Tel: (512) 346-1100
TBPELS Firm Registration No. F-3043

CITY OF GEORGETOWN, TEXAS

SOUTH LAKE TO SOUTH FORK WASTEWATER IMPROVEMENTS

CIVIL STANDARD DETAILS III

PROJECT NO. 2048–272644
FILE NAME: C003STDT

SHEET NO.
CD-3

XREFs: [CDMS_2234_South_lake_to_South_fork_Border_PP] Images: []
Last saved by: SAMIDURAIM, Time: 03-05-2024 18:45:31
pw:\\cdtsmith-az02-pw.bentley.com:pw_pw1\204982\264404 Design Services NM_50%\02 Civil\10 BIM_CAD\D\02 Details\South Lake to South fork\C003STDT.dwg
© 2022 CDM SMITH ALL RIGHTS RESERVED
REUSE OF DOCUMENTS: THESE DOCUMENTS AND DESIGNS PROVIDED BY PROFESSIONAL SERVICE, INCORPORATED HEREIN, ARE THE PROPERTY OF CDM SMITH AND ARE NOT TO BE USED, IN WHOLE OR PART, FOR ANY OTHER PROJECT WITHOUT THE WRITTEN AUTHORIZATION OF CDM SMITH.
Plotted: 5/3/2024 1:45:41 PM

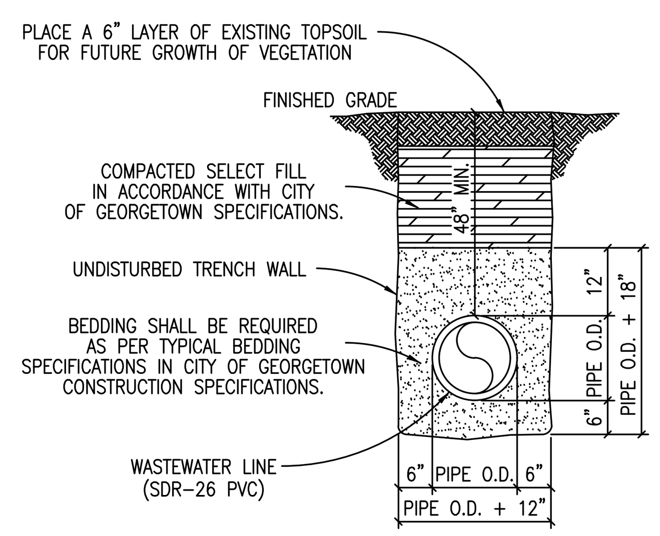

TRENCH WIDTHS
*PIPE LESS THAN 20" DIAMETER
1'-0" + PIPE O.D.
*20" DIAMETER PIPE AND LARGER
2'-0" + PIPE O.D.

The Architect/Engineer assumes responsibility for appropriate use of this standard.

ADOPTED 6/21/2006

GEORGETOWN TEXAS — Georgetown Utility Systems	CITY OF GEORGETOWN CONSTRUCTION STANDARDS AND DETAILS TRENCH AND EMBEDMENT DETAIL UNDER NON-PAVED AREAS	WW16 NTS 1/2003 MRS TRB

DETAIL A
NTS

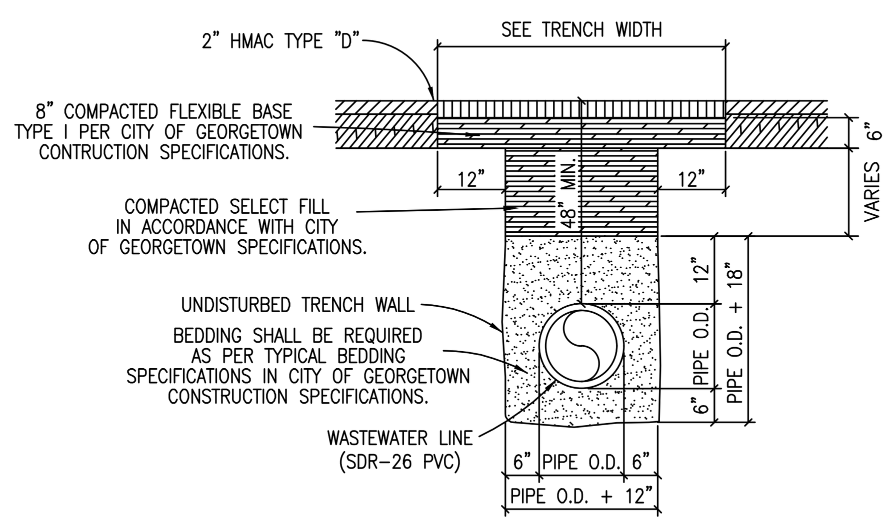

TRENCH WIDTHS
*PIPE LESS THAN 20" DIAMETER
1'-0" + PIPE O.D.
*20" DIAMETER PIPE AND LARGER
2'-0" + PIPE O.D.

NOTES:
1. REPLACED BASE MATERIAL OVER DITCH SHALL BE TWICE THE THICKNESS OF THE ORIGINAL BASE.
2. BASE MATERIAL SHALL BE PLACED IN MULTIPLE LIFTS NOT TO EXCEED 6". EACH LAYER SHALL BE THOROUGHLY ROLLED OR TAMPED TO SPECIFIED MAXIMUM DENSITY.
3. ASPHALT CONCRETE PAVEMENT JOINTS SHALL BE MECHANICALLY SAWED.
4. SURFACE MATERIAL WILL BE CONSISTENT WITH THE EXISTING SURFACE.
5. DENSITY TESTS SHALL BE TAKEN IN ACCORDANCE WITH THE CITY OF GEORGETOWN CONSTRUCTION SPECIFICATIONS AND STANDARDS.
6. CONTRACTOR OR ENGINEER MAY USE FLOWABLE BACKFILL AS AN ALTERNATE BACKFILL MATERIAL (SEE C9 FLOWABLE BACKFILL FOR THE SPECIFICATION).

The Architect/Engineer assumes responsibility for appropriate use of this standard.

ADOPTED 6/21/2006

GEORGETOWN TEXAS	CITY OF GEORGETOWN CONSTRUCTION STANDARDS AND DETAILS TRENCH AND EMBEDMENT AND PAVEMENT REPLACEMENT DETAIL UNDER EXISTING ROADWAY	WW17 NTS 1/2003 MRS TRB

DETAIL B
NTS

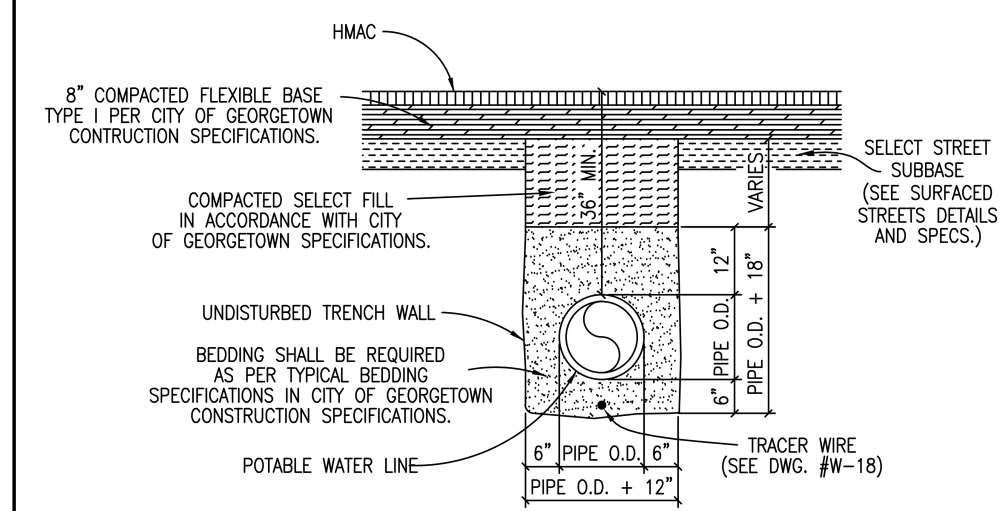

TRENCH WIDTHS
*PIPE LESS THAN 20" DIAMETER
1'-0" + PIPE O.D.
*20" DIAMETER PIPE AND LARGER
2'-0" + PIPE O.D.

NOTES:
1. DENSITY TESTS SHALL BE TAKEN IN ACCORDANCE WITH THE CITY OF GEORGETOWN CONSTRUCTION SPECIFICATIONS AND STANDARDS.
2. CONTRACTOR OR ENGINEER MAY USE FLOWABLE BACKFILL AS AN ALTERNATE BACKFILL MATERIAL (SEE C9 FLOWABLE BACKFILL FOR THE SPECIFICATION).

The Architect/Engineer assumes responsibility for appropriate use of this standard.

ADOPTED 6/21/2006

GEORGETOWN TEXAS	CITY OF GEORGETOWN CONSTRUCTION STANDARDS AND DETAILS TRENCH AND EMBEDMENT DETAIL UNDER PROPOSED ROADWAY	W22 NTS 1/2003 MRS TRB

DETAIL C
NTS

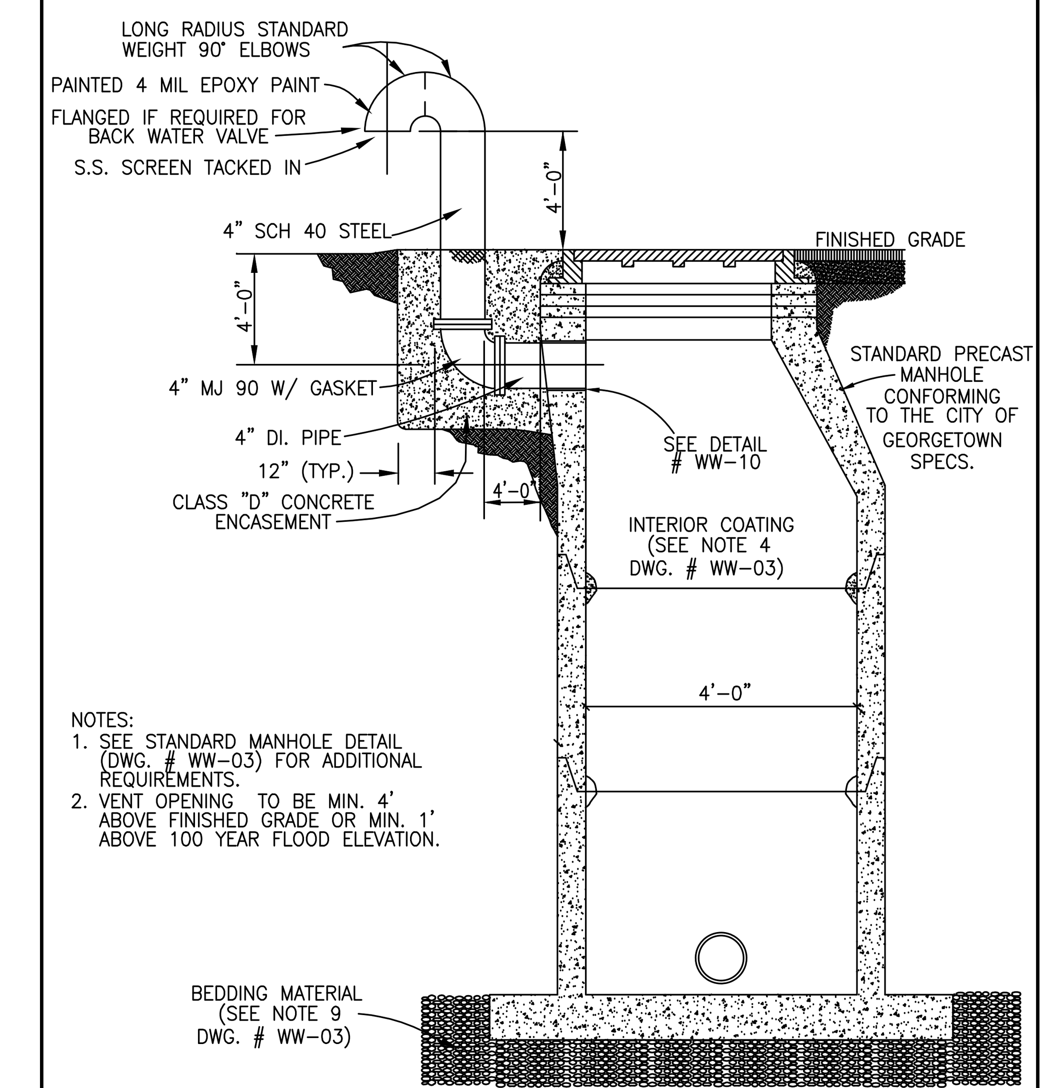

NOTES:
1. SEE STANDARD MANHOLE DETAIL (DWG. # WW-03) FOR ADDITIONAL REQUIREMENTS.
2. VENT OPENING TO BE MIN. 4' ABOVE FINISHED GRADE OR MIN. 1' ABOVE 100 YEAR FLOOD ELEVATION.

The Architect/Engineer assumes responsibility for appropriate use of this standard.

ADOPTED 6/21/2006

GEORGETOWN TEXAS	CITY OF GEORGETOWN CONSTRUCTION STANDARDS AND DETAILS TYPICAL MANHOLE WITH VENT	WW19 NTS 11/2003 MRS TRB

DETAIL D
NTS

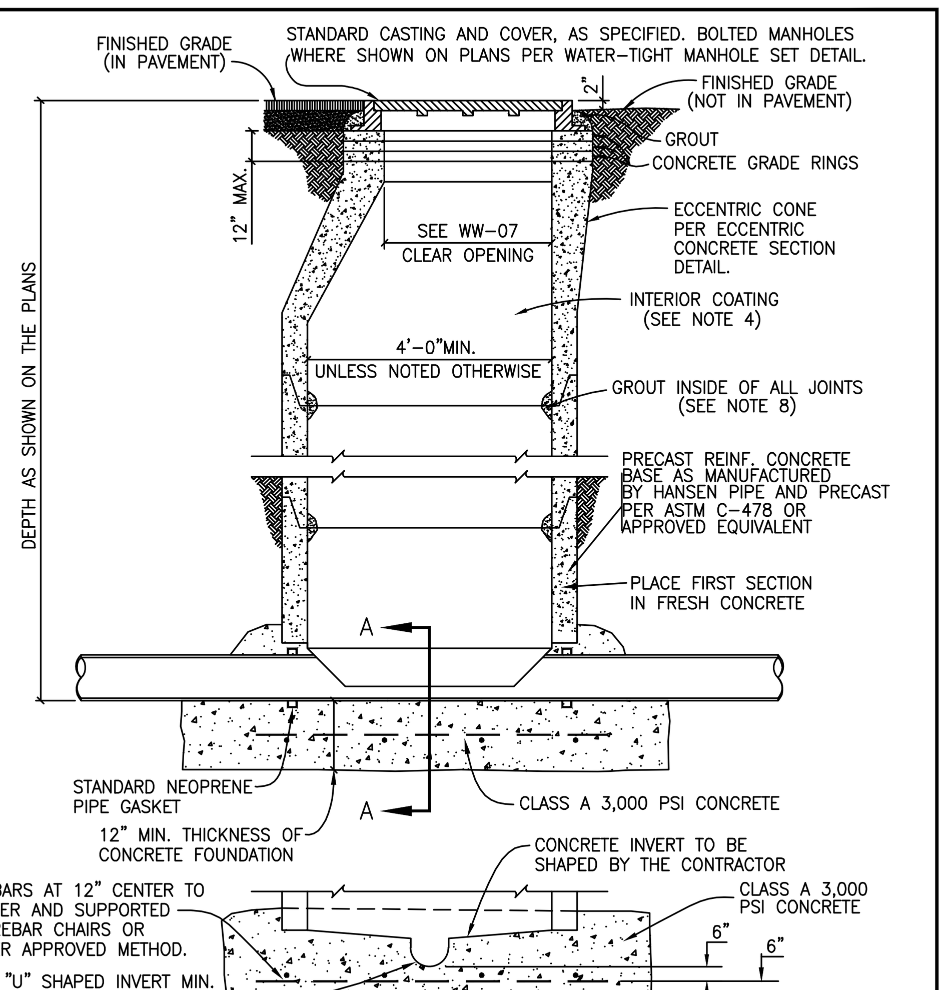

NOTES:
1. MANHOLES SHALL BE PRECAST ASTM C-478 BELL AND SPIGOT WITH PROFILE GASKET – SINGLE OFF-SET JOINTS.
2. SEE PLANS AND MANHOLE SCHEDULE, FOR MANHOLE SIZE, LOCATION, CONFIGURATION, TYPE OF TOP SECTION, VENTING REQUIREMENTS, PIPE SIZE AND TYPES.
3. SEE SPECIFICATIONS ON MATERIALS AND CONSTRUCTION.
4. AN 80 MIL. COAT OF RAVEN LINING SYSTEMS, RAVEN 405 ULTRA HIGH BUILD EPOXY COATING, OR SPRAY WALL EPOXY COATING, OR APPROVED EQUAL, TO BE APPLIED TO ENTIRE INTERIOR OF EACH WASTEWATER MANHOLE AND UNDERSIDE OF FLAT TOPS.
5. ALL MANHOLE COVERS SHALL BE BOLTED AND GASKETTED WHEN MANHOLES ARE LOCATED OUT FROM PAVEMENT.
6. MANHOLES TO BE VENTED ARE IDENTIFIED ON MANHOLE SCHEDULE. REFERENCE MANHOLE VENT DETAIL.
7. MANHOLES ARE TO BE DESIGNED TO RESIST LATERAL AND VERTICAL SOIL FORCES RESULTING FROM MANHOLE DEPTH. ADDITIONALLY, MANHOLES LOCATED IN PAVEMENT TO BE DESIGNED FOR HS-20 TRAFFIC LOADS.
8. GROUT SHALL MEET THE REQUIREMENTS AS STATED BY THE COATING MANUFACTURER.
9. MANHOLE BASE BEDDING MATERIAL SPECS. FOR 3/4" WASHED GRAVEL:
   SIEVE SIZE 2", PERCENT (%) RETAINED 0 — SIEVE SIZE 1 1/2", % RETAINED 0-10
   SIEVE SIZE 1", % RETAINED 45-80 — SIEVE SIZE 3/4", % RETAINED 85-100
   SIEVE SIZE 3/8", % RETAINED 95-100
10. ALL PVC PIPE SHALL BE REMOVED FROM INVERT.

The Architect/Engineer assumes responsibility for appropriate use of this standard.

ADOPTED 6/21/2006

GEORGETOWN TEXAS — Georgetown Utility Systems, Your Community Owned Utility	CITY OF GEORGETOWN CONSTRUCTION STANDARDS AND DETAILS PRECAST MANHOLE ON CAST-IN-PLACE FOUNDATION	WW20 NTS 1/2006 MRS TRB

DETAIL E
NTS

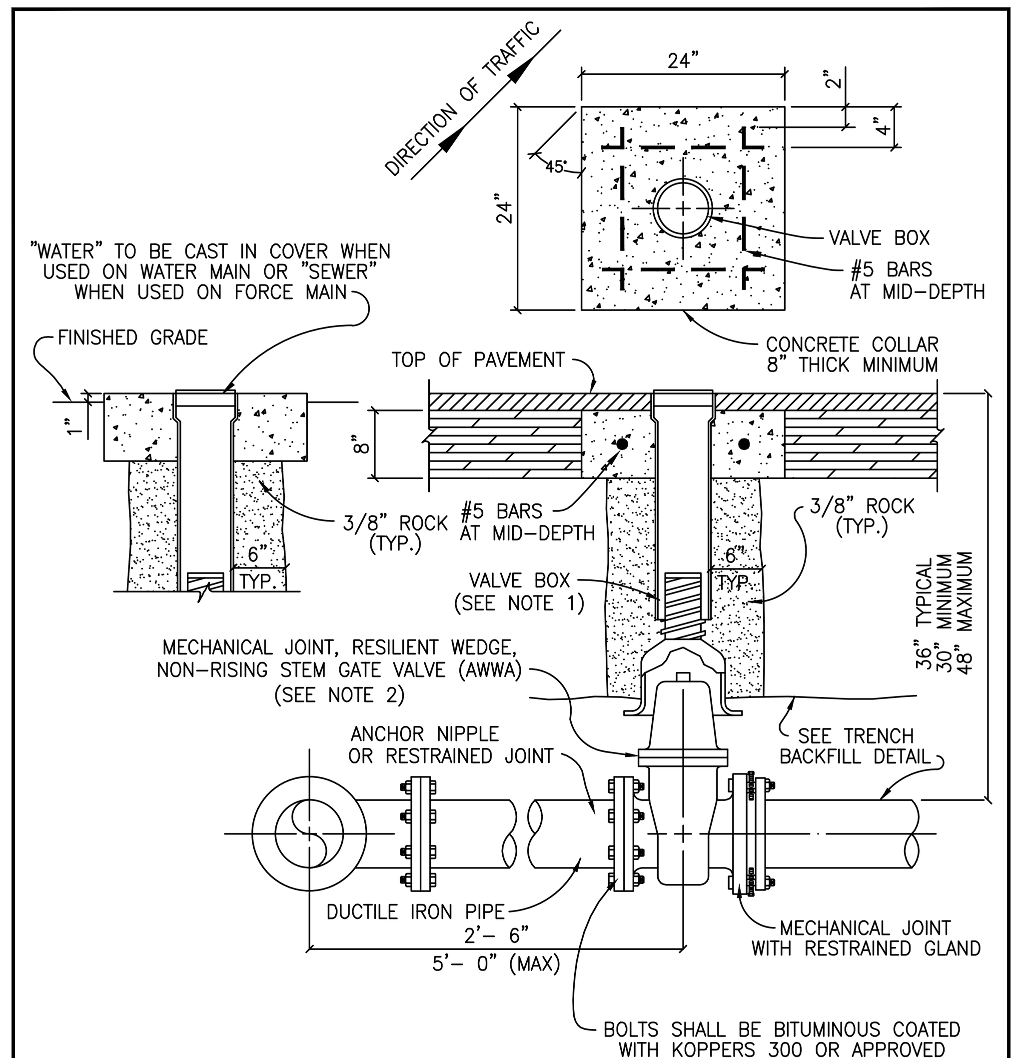

NOTES:
1. VALVE BOX SHALL BE 5 1/4" CAST IRON ADJUSTABLE HAVING AN ADJUSTABLE RANGE OF + OR – 6 INCHES FROM INSTALLED FINISH GRADE.
2. ACCEPTABLE GATE VALVES ARE:
   A. AMERICAN FLOW CONTROL – SERIES 2500
   B. MUELLER – 2360 SERIES
   C. CLOW

The Architect/Engineer assumes responsibility for appropriate use of this standard.

ADOPTED 6/21/2006

GEORGETOWN TEXAS	CITY OF GEORGETOWN CONSTRUCTION STANDARDS AND DETAILS TYPICAL VALVE SETTING	W07 NTS 1/2003 MRS TRB

DETAIL F
NTS

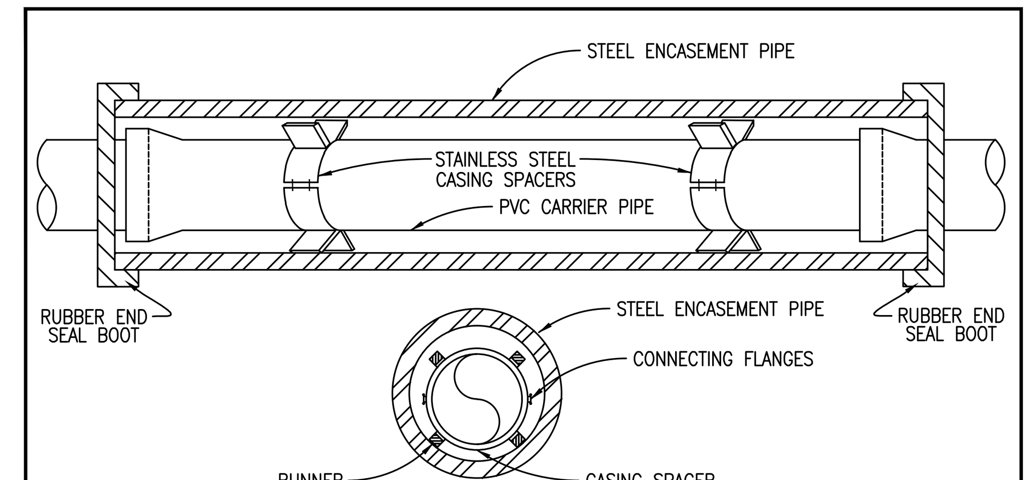

NOTES:
1. CASING SPACERS SHALL BE BOLT ON STYLE WITH A SHELL MADE IN TWO SECTIONS OF HEAVY T-304 STAINLESS STEEL. CONNECTING FLANGES SHALL BE RIBBED FOR EXTRA STRENGTH. CASING SPACERS SHALL BE MADE BY CASCADE WATERWORKS MFG. CO. OR APPROVED EQUAL.
2. CASING SPACERS SHALL HAVE RUNNERS MADE OF ULTRA HIGH MOLECULAR WEIGHT POLYMER, WITH A MINIMUM HEIGHT OF 2 INCHES.
3. DO NOT USE WEDGES BETWEEN TOP OF PVC CARRIER PIPE AND INSIDE OF CASING TO KEEP PVC FROM MOVING.
4. PRIOR TO INSERTING PVC CARRIER PIPE, ANY WATER SHOULD BE PUMPED OUT OF THE CASING PIPE SO THAT NO MORE THAN A FEW INCHES OF WATER REMAINS.
5. SPACERS WILL BE REQUIRED WITHIN AT LEAST 3 FEET FROM BOTH OPENINGS OF THE ENCASEMENT PIPE AND SPACED NO GREATER THAN 6 FEET THROUGHOUT THE ENCASEMENT PIPE.
6. ENCASEMENT PIPE SHALL BE SMOOTH STEEL 35,000 PSI YIELD STRENGTH WITH THICKNESS ACCORDING TO THE FOLLOWING TABLE:
7. WHEN CASING IS REQUIRED UNDER PAVEMENT WITHIN THE R.O.W., THE CASING SHALL EXTEND OUT TO WITHIN 4' INSIDE OF THE R.O.W. LINE, ON BOTH SIDES.
8. ALL JOINTS SHALL BE RESTRAINED ON PVC CARRIER PIPE.

PIPE SIZE–CARRIER (DIAMETER)	PIPE SIZE–CASING (DIAMETER)(MIN.)	MINIMUM PIPE THICKNESS (INCHES)	
6"	16"		
8"	18"	1/4	0.2500
10"	20"	5/16	0.3125
12" – 14"	24"	3/8	0.3750
16" – 18"	30"	7/16	0.4375
20"	36"	1/2	0.5000
24"	42"	1/2	0.5000
30"	48"	1/2	0.5000

The Architect/Engineer assumes responsibility for appropriate use of this standard.

ADOPTED 6/21/2006

GEORGETOWN TEXAS	CITY OF GEORGETOWN CONSTRUCTION STANDARDS AND DETAILS INSTALLATION OF P.V.C. PIPE THROUGH CASING	W14 NTS 1/2003 MRS TRB

DETAIL G
NTS

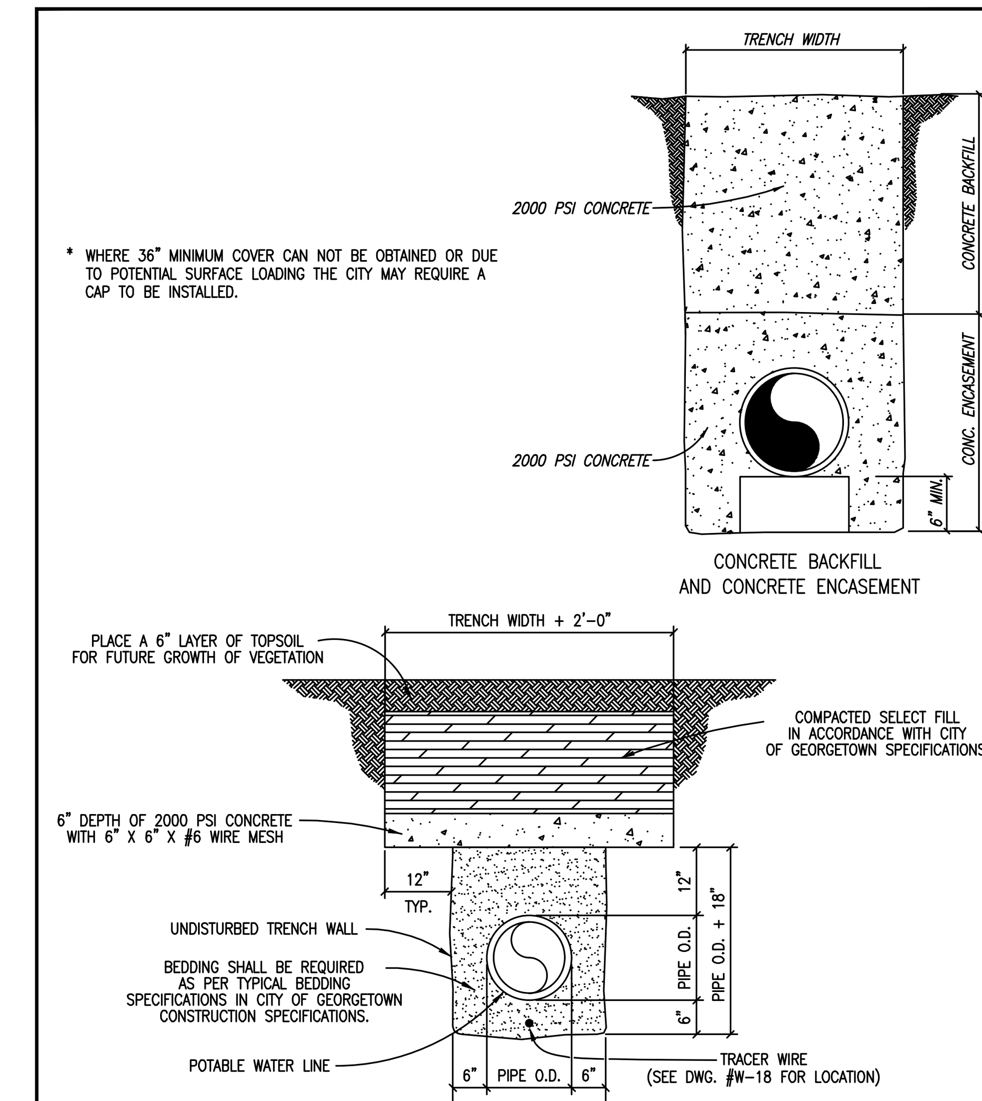

* WHERE 36" MINIMUM COVER CAN NOT BE OBTAINED OR DUE TO POTENTIAL SURFACE LOADING THE CITY MAY REQUIRE A CAP TO BE INSTALLED.

TRENCH WIDTHS
*PIPE LESS THAN 20" DIAMETER
1'-0" + PIPE O.D.
*20" DIAMETER PIPE AND LARGER
2'-0" + PIPE O.D.

The Architect/Engineer assumes responsibility for appropriate use of this standard.

ADOPTED 6/21/2006

GEORGETOWN TEXAS	CITY OF GEORGETOWN CONSTRUCTION STANDARDS AND DETAILS CONCRETE TRENCH CAP DETAIL	W02A NTS 1/2003 MRS TRB

DETAIL H
NTS

STATE OF TEXAS — GERALD S. FURRIER — 129811 — LICENSED PROFESSIONAL ENGINEER
04/30/2024

REV. NO.	DATE	DRWN	CHKD	REMARKS

DESIGNED BY: A.KAJALE
DRAWN BY: S MANISANKAR
SHEET CHK'D BY: ASHWIN G
CROSS CHK'D BY: A.RHAMES
APPROVED BY: G.FURRIER
DATE: APRIL 2024

CDM Smith
8310-1 N Capital of Texas Hwy, Suite 250
Austin, TX 78731
Tel: (512) 346-1100
TBPELS Firm Registration No. F-3043

CITY OF GEORGETOWN, TEXAS
SOUTH LAKE TO SOUTH FORK WASTEWATER IMPROVEMENTS

CIVIL STANDARD DETAILS IV

PROJECT NO. 2048-272644
FILE NAME: C004STDT
SHEET NO. CD-4

Plotted: 5/3/2024 1:45:51 PM

XREFs: [CDMS_2234_South_lake_to_South_fork_Border_PP] Images: []
Last saved by: SAMIDURAIM Time: 03-05-2024 18:45:23
pw:\\cdmsmith-az02-pw.bentley.com:pw_p01\2048\272644\04 Design Services NM_50%\02 Civil\10 BIM_CADD\02 Details\South Lake to South fork\C004STDT.dwg
© 2022 CDM SMITH ALL RIGHTS RESERVED.
REUSE OF DOCUMENTS: THESE DOCUMENTS AND DESIGNS PROVIDED BY PROFESSIONAL SERVICE, INCORPORATED HEREIN, ARE THE PROPERTY OF CDM SMITH AND ARE NOT TO BE USED, IN WHOLE OR PART, FOR ANY OTHER PROJECT WITHOUT THE WRITTEN AUTHORIZATION OF CDM SMITH.

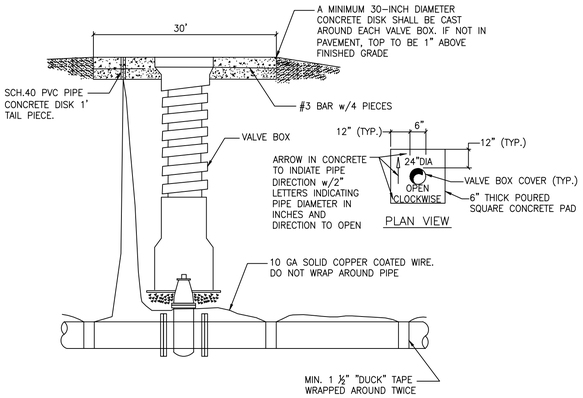

NOTES:

1. TRACER WIRE FOR PVC PIPE SHALL BE NO. 10 AWG GAUGE COATED COPPER WIRE AND ALL SPLICES SHALL BE MADE WITH A MECHANICAL WATER PROOF CONNECTION.
2. TRACER WIRE SHALL COME UP AT THE LIFT STATION, AIR RELIEF VALVE LOCATION AND AT THE MANHOLE OR WETWELL AT THE FORCEMAIN POINT OF DISCHARGE.
3. TRACER WIRE MUST BE "DUCT" TAPED TO THE FORCEMAIN PIPE AT INTERVALS NOT TO EXCEED TEN (10)-FEET AND TAPE WRAPPED AROUND FORCEMAIN TWICE.

TRACER WIRE FOR FORCEMAINS

DETAIL A
NTS

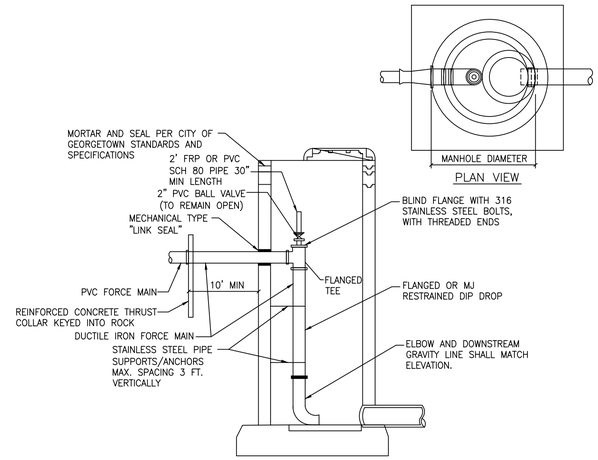

NOTES:

1. MINIMUM 5' DIAMETER MANHOLE.
2. ALL SS HARDWARE SHALL BE GRADE 316 WITH WAX TAPE COATING
3. ALL DUCTILE IRON SHALL HAVE PROTECTO 401 EPOXY LINING
4. RESTRAIN FORCE MAIN PIPE AS DETAILED AND SPECIFIED.
5. INSTALL MANHOLE VENT PER DETAIL D ON SHEET CD-4.

FORCE MAIN PIPING AT DISCHARGE MANHOLE

DETAIL B
NTS

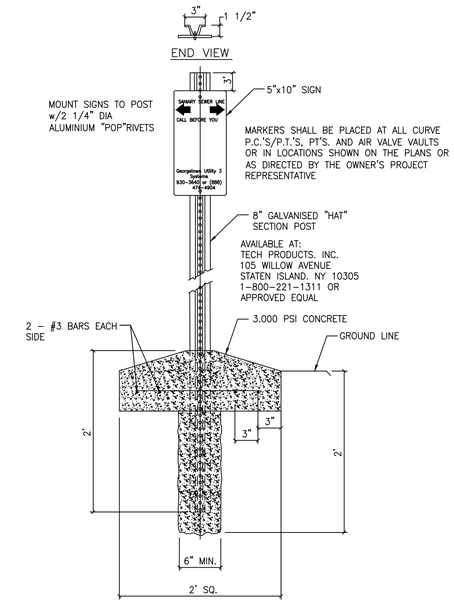

SEWER LINE MARKER DETAIL

DETAIL C
NTS

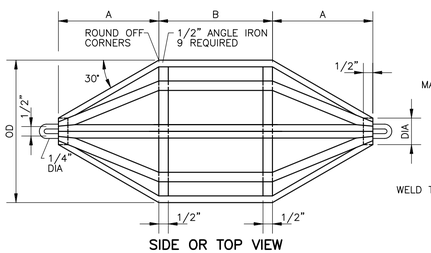

SIDE OR TOP VIEW

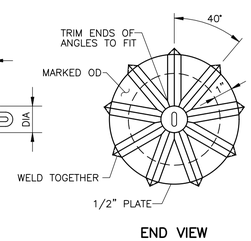

END VIEW

PIPE SIZE (IN)	A (IN)	B (IN)	MANDREL OD PVC (SDR 26) ASTM D3034 (IN)	DIA (IN)
6	4.0	4	5.62	1.00
8	5.3	6	7.52	1.40
10	6.7	6	9.41	1.67
12	8.0	8	11.19	1.95
15	10.0	9	13.70	2.15

PIPE SIZE (IN)	A (IN)	B (IN)	MANDREL OD PVC (T-1) ASTM F679 (IN)	DIA (IN)
18	12	12	16.75	2.89
21	14	14	19.74	3.57
24	16	16	22.21	3.73
27	18	18	25.03	4.25

NOTES:

1.REFERENCE TCEQ §217.57, (B), (1), (A) FOR RIGID MANDREL SIZING REQUIREMENTS FOR DEFLECTION TESTING.

2.ADD THE REQUIREMENTS FOR DEFLECTION TESTING FOR PIPES LARGER THAN 27 INCH.

DEFLECTION TESTING MANDREL

DETAIL D
NTS

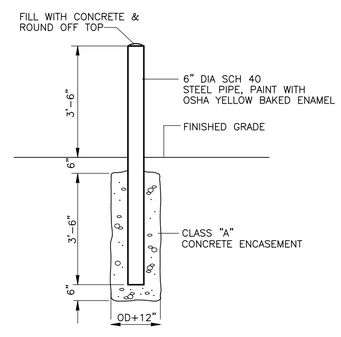

BOLLARD

DETAIL E
NTS

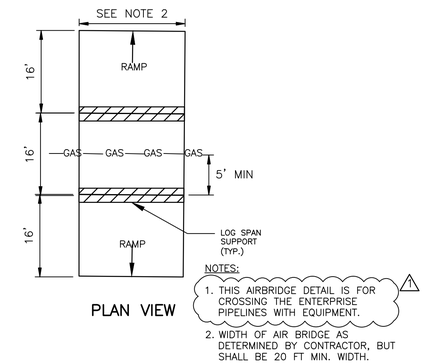

NOTES:

1. THIS AIRBRIDGE DETAIL IS FOR CROSSING THE ENTERPRISE PIPELINES WITH EQUIPMENT.
2. WIDTH OF AIR BRIDGE AS DETERMINED BY CONTRACTOR, BUT SHALL BE 20 FT MIN. WIDTH.

AIRBRIDGE DETAIL FOR GAS PIPELINE EQUIPMENT CROSSING

DETAIL F
NTS

STATE OF TEXAS
GERALD S. FURRIER
129811
LICENSED
PROFESSIONAL ENGINEER
04/30/2024

REV. NO.	DATE	DRWN	CHKD	REMARKS
1	5/29/24	SM	GF	ADDENDUM 2

DESIGNED BY: A.KAJALE
DRAWN BY: S MANISANKAR
SHEET CHK'D BY: ASHWIN G
CROSS CHK'D BY: A.RHAMES
APPROVED BY: G.FURRIER
DATE: APRIL 2024

CDM Smith
8310-1 N Capital of Texas Hwy, Suite 250
Austin, TX 78731
Tel: (512) 346-1100
TBPELS Firm Registration No. F-3043

CITY OF GEORGETOWN, TEXAS
SOUTH LAKE TO SOUTH FORK WASTEWATER IMPROVEMENTS

CIVIL STANDARD DETAILS V

PROJECT NO. 2048-272644
FILE NAME: C005STDT

SHEET NO.
CD-5

XREFs: [CDMS_2234_South_lake_to_South_fork_Border_PP] Images: [Pipeline Marker Detail_2]
Last saved by: KAJALEAN Time: 5/29/2024 10:25:00 AM
pw:\\cdmsmith-az02-pw.bentley.com:pw_pn\12048\272644\04 Design Services NML_50%\02 Civil\10 BIM_CADD\02 Details\South Lake to South fork\C005STDT.dwg
© 2022 CDM SMITH ALL RIGHTS RESERVED.
REUSE OF DOCUMENTS: THESE DOCUMENTS AND DESIGNS PROVIDED BY PROFESSIONAL SERVICE, INCORPORATED HEREIN, ARE THE PROPERTY OF CDM SMITH. THEY ARE NOT TO BE USED, IN WHOLE OR PART, FOR ANY OTHER PROJECT WITHOUT THE WRITTEN AUTHORIZATION OF CDM SMITH.

Plotted: 6/14/2024 4:00:14 PM

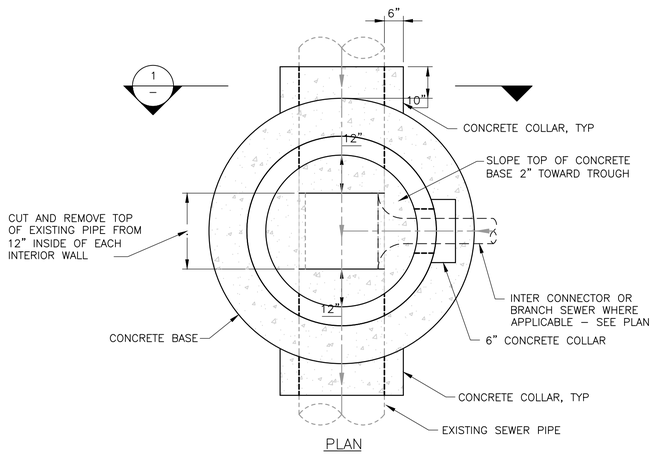

DOGHOUSE TYPE MANHOLE

DETAIL D VARIES

NTS

NOTES:

1. CORE HOLE SHALL NOT ENTER CONE SECTION.
2. THE INVERT ELEVATION OF ANY LATERAL SEWER, SERVICE CONNECTION, OR DROP MANHOLE PIPE SHALL BE ABOVE THE BENCH SURFACE ELEVATION NO. INVERT SHALL BE LOCATED DIRECTLY ON THE SURFACE OF THE BENCH.

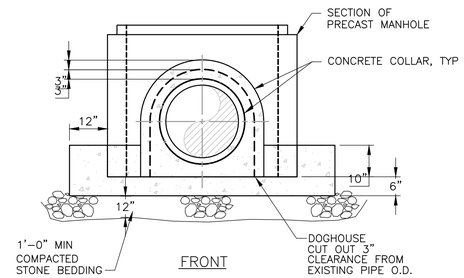

NOTES:

1. MANHOLE RISER SECTIONS AND TOP SHALL COMPLY WITH DETAIL A/CD-2.
2. CONSTRUCT NEW BASE FOR PROPOSED MANHOLES WITH DOGHOUSE TYPE UPPER RISER. SEAL DOGHOUSE OPENINGS AROUND PIPES WITH NON-SHRINK GROUT FOR THE FULL DEPTH OF THE MH WALL. PROVIDE 0.20' FALL ACROSS MH BASE. PRECAST CONCRETE BASES SHALL BE DESIGNED TO WITHSTAND UPLIFT AND FLOTATION FORCES. SUBMIT FLOTATION AND BUOYANCY CALCULATIONS WITH MH SHOP DRAWINGS.

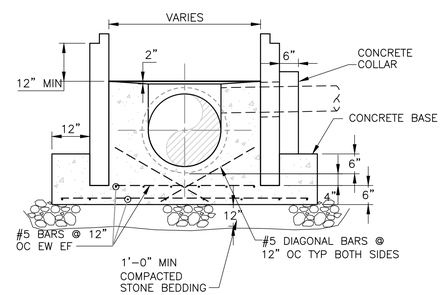

SECTION 1 –

NTS

STATE OF TEXAS
GERALD S. FURRIER
129811
LICENSED
PROFESSIONAL ENGINEER

04/30/2024

REV. NO.	DATE	DRWN	CHKD	REMARKS

DESIGNED BY: A.KAJALE
DRAWN BY: S MANISANKAR
SHEET CHK'D BY: ASHWIN G
CROSS CHK'D BY: A.RHAMES
APPROVED BY: G.FURRIER
DATE: APRIL 2024

CDM Smith
8310-1 N Capital of Texas Hwy, Suite 250
Austin, TX 78731
Tel: (512) 346-1100
TBPELS Firm Registration No. F-3043

CITY OF GEORGETOWN, TEXAS

SOUTH LAKE TO SOUTH FORK WASTEWATER IMPROVEMENTS

CIVIL STANDARD DETAILS VI

PROJECT NO. 2048-272644
FILE NAME: C006STDT
SHEET NO. CD-6

XREFs: [CDMS_2234_South_lake_to_South_fork_Border_PP] Images: [Pipeline Marker Detail_2]
Last saved by: SAMIDURAIM Time: 03-05-2024 18:48:06
pw:\\cdmsmith-az02-pw.bentley.com:pw_pl\120482\272644\04 Design Services NM_50%\02 Civil\10 BIM_CADD\02 Details\South Lake to South fork\C006STDT.dwg
© 2022 CDM SMITH ALL RIGHTS RESERVED.
REUSE OF DOCUMENTS: THESE DOCUMENTS AND DESIGNS PROVIDED BY PROFESSIONAL SERVICE, INCORPORATED HEREIN, ARE THE PROPERTY OF CDM SMITH AND ARE NOT TO BE USED, IN WHOLE OR PART, FOR ANY OTHER PROJECT WITHOUT THE WRITTEN AUTHORIZATION OF CDM SMITH.

Plotted: 5/3/2024 1:46:38 PM

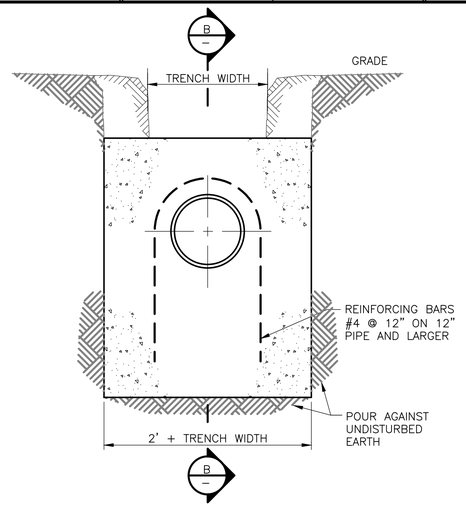

SECTION A–A

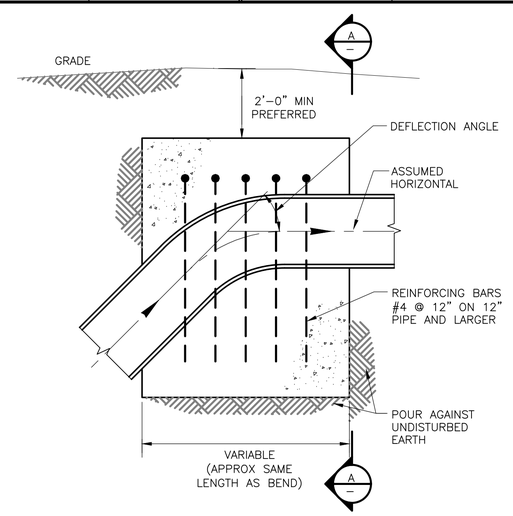

SECTION B–B

UPPER VERTICAL BENDS

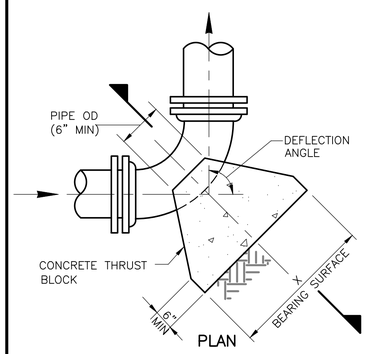

PLAN

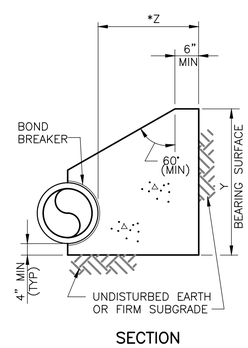

SECTION

HORIZONTAL BENDS

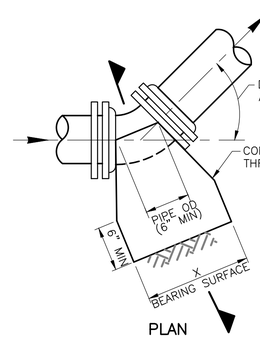

PLAN

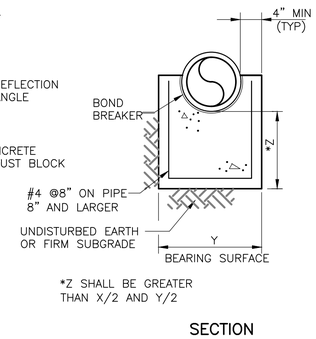

SECTION

LOWER VERTICAL BENDS

TEES

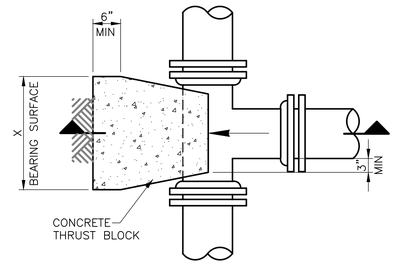

PLAN

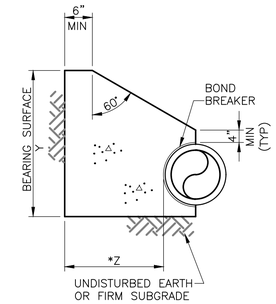

SECTION

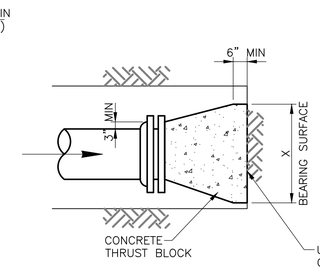

PLAN

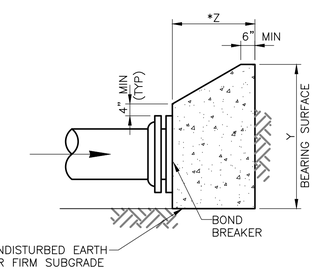

SECTION

CAPS OR PLUGS

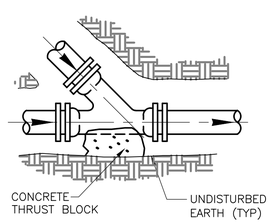

WYES

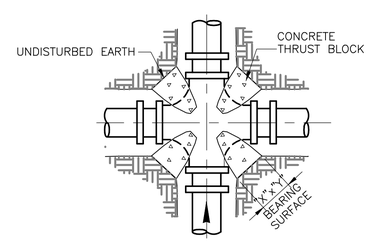

CROSSES

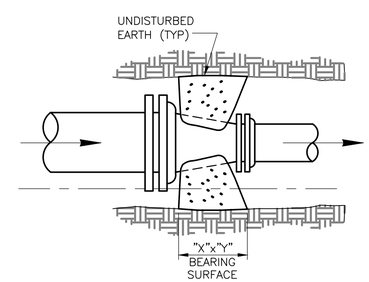

REDUCERS

NOTES FOR CONCRETE THRUST BLOCKING:

1. CONCRETE THRUST BLOCKS MAY BE USED ONLY FOR SPECIAL CONDITIONS WHEN APPROVED OR DIRECTED BY THE ENGINEER.
2. CONCRETE THRUST BLOCKING DETAILS ARE SHOWN TO GIVE THE CONTRACTOR A GENERAL KNOWLEDGE OF THE WORK HE MUST PERFORM IF CONCRETE THRUST BLOCKS ARE TO BE USED IN LIEU OF RESTRAINED JOINTS. CHANGES IN MATERIALS ENCOUNTERED IN THE TRENCH MAY CHANGE THE EXACT LOCATIONS AND SIZES OF THE BLOCKS SHOWN HEREIN.
3. CONCRETE BLOCKING MUST BE IN PLACE FIVE (5) DAYS PRIOR TO TESTING THE PIPELINE.
4. THRUST BLOCKING REQUIRING BEARING AREAS OF TWO (2) SQUARE FEET OR GREATER SHALL REQUIRE FORMED CONSTRUCTION.
5. EVERY VERTICAL BEND SHALL BE ANCHORED TO A CONCRETE THRUST BLOCK KEYED INTO UNDISTURBED SOIL. THE TRUST BLOCK SHALL BE OF SUFFICIENT SIZE AND WEIGHT TO RESIST THRUST WITHOUT MOVING.

THE MINIMUM VOLUME OF CONCRETE REQUIRED TO WITHSTAND UPWARD THRUST AT AN UPPER VERTICAL (DOWNWARD) BEND SHALL BE DETERMINED BY THE FOLLOWING EQUATION.

$$V = \frac{2\ PA\ \sin \Delta/2}{4050}$$

WHERE:
V= MINIMUM VOLUME OF CONCRETE IN CUBIC YARDS
P= PIPE TEST PRESSURE IN POUNDS PER SQUARE INCH
A= INTERIOR AREA OF PIPE IN SQUARE INCHES
Δ= ANGLE OF BEND IN DEGREES
4050= WEIGHT OF CUBIC YARD OF CONCRETE AT 150 LBS/CUFT

FOR EXAMPLE, A 45 DEGREE VERTICAL BEND FOR A 36 INCH DIAMETER PIPE AND 100 PSI TEST PRESSURE REQUIRES:

$$V = \frac{2(100)\ ((\pi/4)x36x36)\ (\sin 22.50\ \text{DEG})}{4050} = 19.2 \text{ CU YD OF CONCRETE}$$

6. WHEN ALLOWED BY ENGINEER (SEE NOTE 1 ABOVE) THRUST BLOCKING OF 3000 PSI CONCRETE SHALL BE PROVIDED AT ALL BENDS (VERTICAL AND HORIZONTAL), REDUCERS, TEES, PLUGS, WYES , AND CROSSES ON ALL BURIED PIPELINES WITH FLEXIBLE JOINTS. THRUST BLOCKING SHALL BE ADEQUATE FOR THE PARTICULAR CONDITIONS OF PIPE DIAMETER, PIPE TEST PRESSURE, AND ALLOWABLE SOIL BEARING PRESSURE ENCOUNTERED. THRUST BLOCKING SHALL EXTEND TO THE LIMITS OF TRENCH EXCAVATION AND SHALL BEAR AGAINST UNDISTURBED TRENCH WALLS.
7. ALL "DEAD–END" LINES WHICH WILL BE OR MIGHT BE EXTENDED IN THE FUTURE SHALL REQUIRE CONCRETE THRUST BLOCKING.
8. THE MINIMUM BEARING AREA REQUIRED FOR OFFSET PIPING MUST BE CALCULATED FOR EACH INDIVIDUAL CASE DEPENDING UPON ANGLE OF OFFSET SECTION AND ACTUAL SOIL BEARING MATERIAL. USE THE FOLLOWING ALLOWABLE SOIL BEARING PRESSURE IN CALCULATING REQUIRED BEARING AREA.

MATERIAL	BEARING PRESSURE
LIMESTONE	4000 LBS/SQFT
GOOD UNDISTURBED SOIL	2000 LBS/SQFT
CALICHE	2000 LBS/SQFT
LOOSE OR SPONGY SOIL	1500 LBS/SQFT

9. THE MINIMUM REQUIRED CONCRETE THRUST BLOCK BEARING AREA FOR HORIZONTAL BENDS SHALL BE COMPUTED FROM THE FORMULA:

$$B = \frac{2\ PA\ \sin \Delta/2}{S}$$

WHERE:
B= MINIMUM CONCRETE THRUST BEARING AREA IN SQUARE FEET= (X)x(Y)
A= AREA OF PIPE IN SQUARE INCHES
P= PIPE TEST PRESSURE IN POUNDS PER SQUARE INCH
Δ = ANGLE OF BEND IN DEGREES
S= ALLOWABLE SOIL BEARING PRESSURE. SEE NOTE 8

FOR EXAMPLE, A 45 DEGREE BEND FOR A 36 INCH DIAMETER PIPE AND 100 PSI TEST PRESSURE IN GOOD UNDISTURBED SOIL REQUIRES:

$$B = \frac{2(100)\ ((\pi/4)x36x36)\ (\sin 22.50\ \text{DEG})}{2000} = 39.0 \text{ SQUARE FEET OF BEARING AREA}$$

10. FOR REDUCERS ASSUME Δ=30° IN EQUATION 9 AND PLACE ONE–HALF OF REQUIRED BLOCKING ON EACH SIDE OF FITTING AS SHOWN.
11. FOR CROSSES ASSUME Δ=90° IN EQUATION 9 AND PLACE ONE–HALF OF REQUIRED BLOCKING AT EACH QUADRANT AS SHOWN.
12. FOR TEES, CAPS, AND PLUGS USE B=PA/S IN EQUATION 9.
13. FOR WYES USE Δ=45° IN EQUATION 9.
14. ALL THRUST BLOCK DIMENSIONS, SHAPES, LOCATIONS, ETC, SHALL BE APPROVED BY ENGINEER.

THRUST BLOCKING
DETAIL A
NTS

NOTE:
THESE ARE STANDARD CIVIL DETAILS. ALL DETAILS ON CZ DRAWINGS MAY NOT APPLY TO THIS PROJECT. IT IS THE CONTRACTOR'S RESPONSIBILITY TO DETERMINE WHICH DETAILS ARE NEEDED BASED UPON INFORMATION SHOWN ON THE DRAWINGS.

STATE OF TEXAS
GERALD S. FURRIER
129811
LICENSED
PROFESSIONAL ENGINEER
04/30/2024

REV. NO.	DATE	DRWN	CHKD	REMARKS

DESIGNED BY: A.KAJALE
DRAWN BY: S MANISANKAR
SHEET CHK'D BY: ASHWIN G
CROSS CHK'D BY: A.RHAMES
APPROVED BY: G.FURRIER
DATE: APRIL 2024

CDM Smith
8310-1 N Capital of Texas Hwy, Suite 250
Austin, TX 78731
Tel: (512) 346-1100
TBPELS Firm Registration No. F-3043

CITY OF GEORGETOWN, TEXAS
SOUTH LAKE TO SOUTH FORK
WASTEWATER IMPROVEMENTS

STANDARD CIVIL DETAILS VII

PROJECT NO. 2048–272644
FILE NAME: C007STDT.DWG
SHEET NO.
CD-7

XREFs: [CDMS_2234-SOUTHLAKE_FWL] Images: []
Last saved by: SAMIDURAIM, Time: 03-05-2024 1:8:49 21
pw:\\cdmsmith-a02-pw.bentley.com:pw_pf\120485\272644\04 Design Services NM_50%\02 Civil\10 BIM_CADD\02 Details\South Lake to South fork\C007STDT.dwg
© 2022 CDM SMITH ALL RIGHTS RESERVED.
REUSE OF DOCUMENTS: THESE DOCUMENTS AND DESIGNS PROVIDED BY PROFESSIONAL SERVICE, INCORPORATED HEREIN, ARE THE PROPERTY OF CDM SMITH AND ARE NOT TO BE USED, IN WHOLE OR PART, FOR ANY OTHER PROJECT WITHOUT THE WRITTEN AUTHORIZATION OF CDM SMITH.

Plotted: 5/3/2024 1:46:47 PM

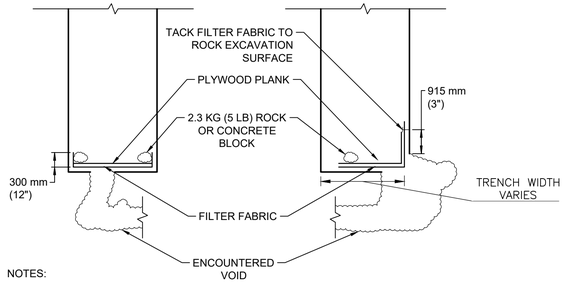

NOTES:

1. PLACE TEMPORARY PROTECTION WITHIN TRENCH TO COVER VOID AS INDICATED. FABRIC SHALL EXTEND A MINIMUM OF 915 mm (3') BEYOND EDGE OF VOID. PLACE A PLYWOOD PLANK (MINIMUM 0.75" (19 mm) THICK) OVER FABRIC. PLANK AND FABRIC SHALL BE WEIGHTED AS REQUIRED BY ROCK 2.3 KG (5 LB) OR HEAVIER AS NEEDED OR CONCRETE BLOCK TO SECURE FILTER FABRIC.
2. TEMPORARY PROTECTION SHALL BE IN PLACE AT ALL TIMES THAT CONSTRUCTION OPERATIONS ARE NOT IN PROGRESS.
3. CONSTRUCTION OPERATIONS WITHIN 7.6 m (25') SHALL NOT PROGRESS DURING OCCURRENCE OF RAIN TO ALLOW FOR PROTECTION OF VOID DURING A RAIN EVENT.
4. LOCALIZED EROSION MEASURES (SILT FENCE OR TRIANGULAR FILTER DIKES) SHALL BE INSTALLED ALONG THE TRENCH TO ENSURE THAT LOOSE SPOILS OR RUNOFF DO NOT ENTER THE TRENCH OR AFFECT PERFORMANCE OF TEMPORARY PROTECTION.
5. SPECIAL CARE SHALL BE TAKEN TO ENSURE THAT EROSION CONTROL MEASURES REQUIRED ALONG THE TRENCH ARE MAINTAINED, CLEANED AND FULLY FUNCTIONAL.
6. PROCEDURES AND MATERIAL REQUIREMENTS OUTLINED IN STANDARD SPEC. 025731 SHALL BE FOLLOWED.
7. FILTER FABRIC AND ROCK OR CONCRETE BLOCKS AND PLYWOOD PLANK SHALL BE REMOVED FROM THE TRENCH WHEN PERMANENT VOID MITIGATION MEASURES ARE INSTALLED.

CLASS I – TEMPORARY PROTECTION OF VOID AT BOTTOM OF TRENCH

DETAIL A
NTS –

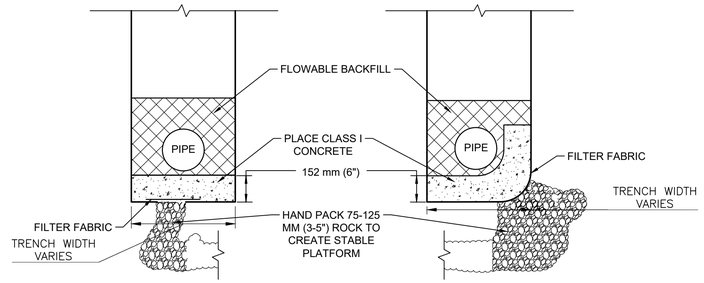

NOTES:

1. PROCEDURES AND MATERIAL REQUIREMENTS OUTLINED IN STANDARD SPEC. 025731 SHALL BE FOLLOWED.
2. VOID OPENING MAY REQUIRE REINFORCEMENT OR SUPPORT IF LARGER THAN 915 mm (3") IN WIDTH OR LENGTH. INSTALL AT DIRECTION OF THE ENGINEER OR DESIGNATED REPRESENTATIVE.
3. CLASS I CONCRETE SHALL CONFORM TO STANDARD SPEC. C-2. PLACE A FORM TO ENSURE MINIMUM THICKNESS OF 457 mm (18") EXTENDING A MINIMUM OF 150 mm (6") BEYOND THE EDGE OF THE VOID.

CLASS II – PERMANENT VOID MITIGATION MEASURES

DETAIL B
NTS –

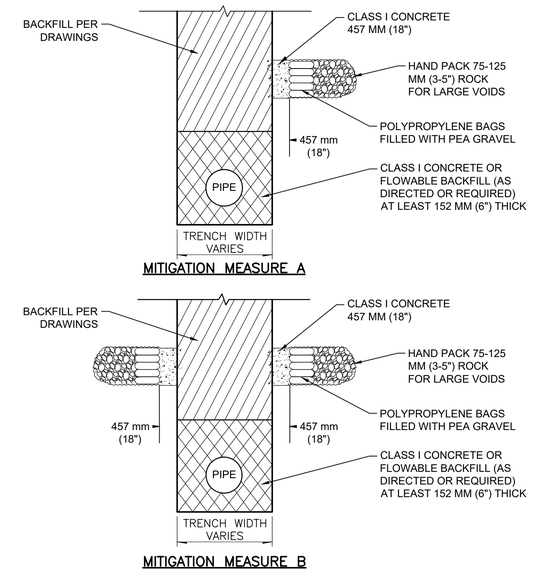

CLASS III – VOID MITIGATION MEASURES

DETAIL C
NTS –

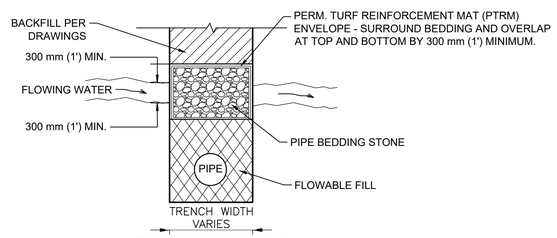

TRANSVERSE PROFILE

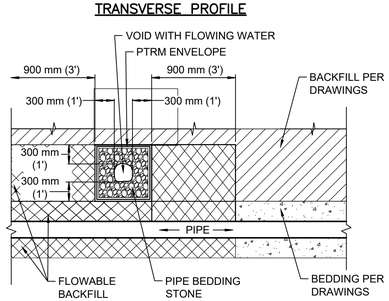

LONGITUDINAL PROFILE

CLASS V – WATER FLOW MITIGATION MEASURES GROUNDWATER ABOVE BEDDING MATERIAL DEPTH

DETAIL D
NTS –

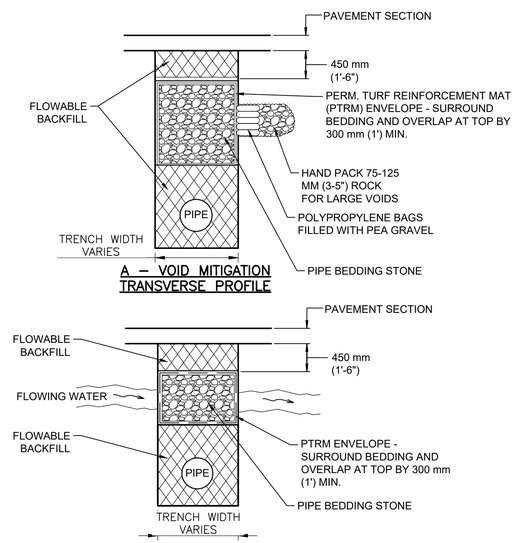

NOTE: PROCEDURES AND MATERIAL REQUIREMENTS OUTLINED IN STANDARD SPEC. 025731 TO BE FOLLOWED.

MODIFIED CLASS V – COMBINATION VOID AND POTENTIAL WATER FLOW MITIGATION MEASURES

DETAIL E
NTS –

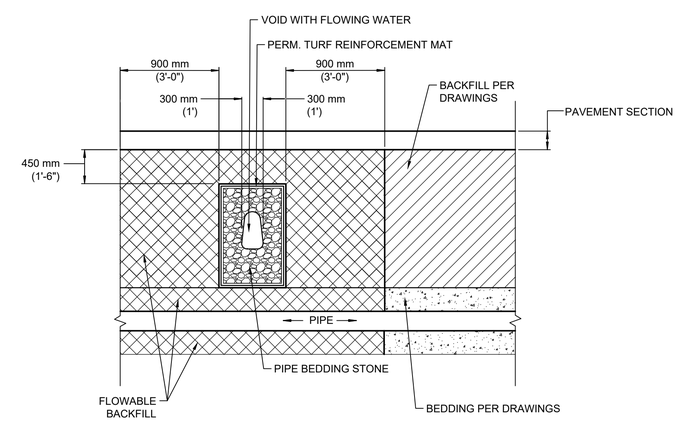

C – FLOWING WATER MITIGATION LONGITUDINAL PROFILE

NOTE: PROCEDURES AND MATERIAL REQUIREMENTS OUTLINED IN STANDARD SPEC. 025731 TO BE FOLLOWED.

MODIFIED CLASS V – COMBINATION VOID AND POTENTIAL WATER FLOW MITIGATION MEASURES

DETAIL F
NTS –

STATE OF TEXAS
GERALD S. FURRIER
129811
LICENSED
PROFESSIONAL ENGINEER
04/30/2024

REV. NO.	DATE	DRWN	CHKD	REMARKS
A	8/3/22	DWS	ALH	CONFORMED DRAWINGS

DESIGNED BY: A.KAJALE
DRAWN BY: S MANISANKAR
SHEET CHK'D BY: ASHWIN G
CROSS CHK'D BY: A.RHAMES
APPROVED BY: G.FURRIER
DATE: APRIL 2024

CDM Smith
8310-1 N Capital of Texas Hwy, Suite 250
Austin, TX 78731
Tel: (512) 346-1100
TBPELS Firm Registration No. F-3043

CITY OF GEORGETOWN, TEXAS
SOUTH LAKE TO SOUTH FORK WASTEWATER IMPROVEMENTS

VOID MITIGATION DETAILS

PROJECT NO. 2048–272644
FILE NAME: C008STDT.DWG
SHEET NO.
CD-8

XREFs: [CDMS_2234-SOUTHLAKE_PWL] Images: []
Last saved by: KAJALEAN Time: 5/5/2024 6:59:48 PM
pw:\\cdmsmith-az02-pw.bentley.com:pw_pw1\204862\2644\04 Design Services NM_50%\02 Civil\10 BIM_CAD\D\02 Details\South Lake to South fork\C008STDT.dwg
© 2022 CDM SMITH ALL RIGHTS RESERVED
REUSE OF DOCUMENTS: THESE DOCUMENTS AND DESIGNS PROVIDED BY PROFESSIONAL SERVICE, INCORPORATED HEREIN, ARE THE PROPERTY OF CDM SMITH AND ARE NOT TO BE USED, IN WHOLE OR PART, FOR ANY OTHER PROJECT WITHOUT THE WRITTEN AUTHORIZATION OF CDM SMITH.
Plotted: 5/5/2024 6:59:58 PM

Construction Specifications

South Lake to South Fork Wastewater Improvements – Gravity and Force Mains
Georgetown, TX

CITY OF GEORGETOWN, TEXAS

CONTRACT DOCUMENTS AND TECHNICAL SPECIFICATIONS
FOR THE CONSTRUCTION OF

South Lake to South Fork Wastewater Improvements

PROJECT NO. PRJ000101

April 2024

Bid No. 202434

Contract No. 24-0160-CIP

TBPE FIRM REGISTRATION NO. F-3043
8310-1 N Capital of Texas Hwy., Suite 250
Austin, Texas 78731
tel 512-346-1100

CDM Smith Project No. 2048-272644

THIS PAGE INTENTIONALLY LEFT BLANK.

CITY OF GEORGETOWN, TEXAS

GEORGETOWN
TEXAS
more than welcome

CONTRACT DOCUMENTS AND TECHNICAL SPECIFICATIONS
FOR THE CONSTRUCTION OF

South Lake to South Fork Wastewater Improvements

PROJECT NO. PRJ000101

April 2024

Bid No. 202434

STATE OF TEXAS
GERALD S. FURRIER
129811
LICENSED
PROFESSIONAL ENGINEER

04/30/2024

Contract No. 24-0160-CIP

CDM Smith
TBPE FIRM REGISTRATION NO. F-3043
8310-1 N Capital of Texas Hwy., Suite 250
Austin, Texas 78731
tel 512-346-1100

CDM Smith Project No. 2048-272644

THIS PAGE INTENTIONALLY LEFT BLANK.

©2024 CDM Smith
All Rights Reserved

CITY OF GEORGETOWN, TEXAS
South Lake to South Fork Wastewater Improvements

TABLE OF CONTENTS

Division	Section	Title
DIVISION 0 - BIDDING AND CONTRACT REQUIREMENTS		
	00020	Invitation to Bid
	00100	Instructions to Bidders
	00300	Bid Form
	00400	Statement of Bidders Experience
	00410	Bid Bond
	00500	Standard Form of Agreement
	00510	Notice of Award
	00550	Notice to Proceed
	00610	Texas Statutory Performance Bond
	00620	Texas Statutory Payment Bond
	00650	Certificate of Insurance
	00680	Form 1295
	00700	General Conditions
	00800	Supplementary Conditions
	00800hh	Wage Rates – Heavy Construction
	00941	Change Order Form and Instructions
CIP	**CAPITAL IMPROVEMENT PROJECT REQUIREMENTS**	
	CIP1	Definition of Terms
	CIP2	Abbreviations
	CIP3	Summary of Work
	CIP4	Site Conditions
	CIP4.1	Boring Logs
	CIP6	Control of Work
	CIP7	Control of Materials
	CIP8	Legal Relations and Responsibilities to the Public
	CIP9	Environmental Protection Procedures
	CIP11	Trench Safety Requirements
	CIP12	Testing of Pipelines
	CIP13	Summary of Testing (Miscellaneous)
	CIP14	Project Closeout
	CIP15	Project Identification Signage
	CIP16	Warranty
	CIP17	Inspection of Projects

©2024 CDM Smith
All Rights Reserved

CITY OF GEORGETOWN, TEXAS
South Lake to South Fork Wastewater Improvements

TABLE OF CONTENTS

Division	Section	Title
G	**GENERAL SPECIFICATIONS**	
	G1	Barricades, Signs and Traffic Handling
	G2	Site Preparation
	G3	Site Clearing
	G4	Pipe Excavation, Trenching, Embedment, Encasement and Backfilling
	G5	Granular Fill Materials
	G6	Sedimentation and Temporary Erosion Control
	G7	Loaming, Hydroseeding and Permanent Erosion Control
	G8	Miscellaneous Work and Cleanup
SD	**STREET AND DRAINAGE SPECIFICATIONS**	
	SD1	Hot Mix Asphaltic Concrete Pavement
	SD2	Roadway Excavation
	SD4	Flexible Base
	SD5	Striping
WW	**WASTEWATER SPECIFICATIONS**	
	WW1	Precast Manholes
	WW2	Polyvinyl Chloride (PVC) Pipe-Wastewater
	WW3	Connections to and Work on the Existing Wastewater System
W	**WATER SPECIFICATIONS**	
	W1	Ductile Iron Pipe and Fittings
	W2	Polyvinyl Chloride (PVC) Pipe - Water
	W3	Valves Hydrants and Appurtenances
	W4	Encasement Pipe
C	**CONCRETE SPECIFICATIONS**	
	C2	Concrete for Structures
	C5	Concrete Sidewalks, Driveways and Flatwork
	C7	Reinforcing Steel
	C9	Flowable Backfill

©2024 CDM Smith
All Rights Reserved

CITY OF GEORGETOWN, TEXAS
South Lake to South Fork Wastewater Improvements

TABLE OF CONTENTS

Division	Section	Title
DIVISION 1 - GENERAL REQUIREMENTS		
	011000	Summary of Work
	011716	Existing Utilities
	012200	Measurement and Payment
	012500	Substation Procedures
	012900	Payment Procedures
	013100	Project Management and Coordination
	013233	Photographic Documentation
	013300	Submittal Procedures
	014000	Quality Requirements
	014200	References
	015000	Temporary Facilities and Controls
	015639	Temporary Tree and Plant Protection
	016000	Product Requirements
	017300	Execution
	017700	Closeout Procedures
	017823	Operation and Maintenance Data
DIVISION 2 – SITE WORK		
	025731	Karst Void Mitigation
DIVISION 3 – CONCRETE		
	036000	Grouting
DIVISION 9 – FINISHES		
	099676.13	Wastewater Collection System Coatings

©2024 CDM Smith
All Rights Reserved

CITY OF GEORGETOWN, TEXAS
South Lake to South Fork Wastewater Improvements

TABLE OF CONTENTS

Division	Section	Title
DIVISION 31 – EARTHWORK		
	310515	Soils and Aggregate for Earthwork
	310900	Geotechnical Instrumentation and Monitoring
	312000	Earthwork
	312316	Rock Removal
	312319	Dewatering
	312323.33	Flowable Fill
	312500	Erosion and Sedimentation Controls
	315000	Excavation Support and Protection
DIVISION 32 – EXTERIOR IMPROVEMENTS		
	321313	Concrete Paving
	321373	Concrete Paving Joint Sealants
DIVISION 33 – UTILITIES		
	330507.25	Auger Boring
	330526	Utility Identification
	330537	Centrifugally Cast Fiberglass-Reinforced Polymer Mortar Utility Pipe
	333400	Sanitary Utility Sewerage Force Mains
DIVISION 40 – PROCESS INTERCONNECTIONS		
	400578.29	Combination Air Valves for Wastewater Service
ADDENDA		

SECTION #00020
INVITATION TO BID

Bids may be electronically submitted through the City E-bid system accessible via City's web site at https://gtowntx.ionwave.net/CurrentSourcingEvents.aspx

Sealed bids will be received by the **City of Georgetown** in the **Georgetown Municipal Court, Purchasing Department, at 510 W. 9th Street, Georgetown, Texas 78626** on **May 30, 2024 at 2:00 p.m.** and immediately thereafter publicly opened and read, for constructing the following project:

South Lake to South Fork Wastewater Improvements
Project No. PRJ000101
Bid No. 202409

The project consists of furnishing and installing and providing all labor and materials required for the construction of the South Lake to South Fork Wastewater Improvements and related force main and gravity sewer pipelines, manholes, and appurtenances as more fully described in the drawings and the summary of work contained in Section CIP3.

Bids must be submitted on the complete project. Bids submitted in hard copy must be enclosed in a sealed envelope, addressed to **City of Georgetown, ATTN: Buyer, 510 W. 9th Street, Georgetown, Texas 78626** and the outside of the envelope must be marked **South Lake to South Fork Wastewater Improvements**. The name and address of the bidder and addendum acknowledgement must be plainly marked on the outside of the envelope. All bids must be made on blank forms provided.

Plans, specifications and bidding documents may be secured beginning **May 5, 2024**.
Bidding Documents are on file and may be examined at the following locations:

- On-line at https://gtowntx.ionwave.net/CurrentSourcingEvents.aspx or www.CIVCASTUSA.com. Documents may be downloaded or viewed free of charge at these website. It is the bidder's responsibility to determine that a complete set of documents as defined in the Instructions to Bidders is received.
- At the office of CDM Smith, 8310-1 N. Capital of Texas Hwy, Suite 250, Austin, Texas 78731, telephone: (512) 346-1100 (Judy MacLeod). Bidding Documents may be obtained upon payment to the Engineer, accompanied with a check in the amount of $100.00 per set, which is not refundable.

Bids not accompanied by cashier's check or bid bond will not be considered. Bidders should register on the City of Georgetown's Ebid web site – https://gtowntx.ionwave.net/Login.aspx. The date, time and place for the pre-bid conference, if to be held, are specified below and in Section #00100, Instructions to Bidders.

Each bid must be accompanied by cash or a certified cashier's check, drawn on a bank or trust

company authorized to do business in the State of Texas, payable to the City of Georgetown in an amount at least equal to five percent (5%) of the total amount of the bid, as a guarantee that a contract will be entered into. In lieu of cash or a certified check, the Bidder may submit a bid bond in the form prescribed in the Instructions to Bidders.

Performance and Payment Bonds, when required, shall be executed on forms furnished by OWNER. Each bond shall be issued in an amount of one hundred percent (100%) of the Contract Amount by a solvent surety or insurance company licensed to do business in the State of Texas and as specifically prescribed in the General Conditions and Supplemental Conditions.

Minimum insurance requirements are specified in the General Conditions and Supplemental Conditions. The successful Bidder and its subcontractors shall pay to laborers, workmen, and mechanics the prevailing wage rates as required by the Supplemental Conditions.

The right is reserved to reject any or all bids, to waive minor technicalities, and to award a contract or contracts which, in the opinion of the Owner, appear to be in its best interest. A minor technicality is one that does not affect the competitiveness of the Bid. The Owner reserves the right to hold any or all proposals for the period of time from the opening of bids as specified in Section 00300, Bid Form.

Effective January 1, 2016, Texas Government Code Section 2252.908 requires persons who enter into contract with a government entity to submit a disclosure of interested parties (Form 1295) to the governmental entity or state agency at the time the business entity submits the signed contract to the governmental entity or state agency. The law applies only to a contract of a governmental entity or state agency that either (1) requires an action or vote by the governing body of the entity or agency before the contract may be signed or (2) has a value of at least $1 million.

Use the following link to access filing instructions:
https://www.ethics.state.tx.us/whatsnew/elf_info_form1295.htm

A **non-mandatory** pre-bid video conference for this project will be held on May 21, 2024, at 2:00 p.m. To attend pre -bid use the Microsoft Teams link provided below. The project site will be available for inspection by prospective bidders immediately following the pre-bid conference.

Microsoft Teams

Join the meeting now

Meeting ID: 274 259 631 51
Passcode: mwPNUs

Dial-in by phone

+1 512-672-8405,,340566186# United States, Austin
Phone conference ID: 340 566 186#

Publication Dates:

Williamson County Sun:

May 5, 2024

May 12, 2024

THIS PAGE INTENTIONALLY LEFT BLANK.

SECTION #00100

INSTRUCTIONS TO BIDDERS

ARTICLE 1: DEFINED TERMS

1.01 Terms used in these Instructions to Bidders will have the meanings indicated in the General Conditions and Supplementary Conditions. Additional terms used in these Instructions to Bidders have the meanings indicated below which are applicable to both the singular and plural thereof:

A. *Bidder*--The individual or entity who submits a Bid directly to OWNER.

B. *Issuing Office*--The office from which the Bidding Documents are to be issued.

C. *Successful Bidder*--The Bidder submitting a responsive Bid to whom OWNER (on the basis of OWNER's evaluation as hereinafter provided) makes an award.

ARTICLE 2: COPIES OF BIDDING DOCUMENTS

2.01 Complete sets of the Bidding Documents in the number and for the non-refundable deposit sum, if any, stated in the Advertisement or Invitation to Bid may be obtained from the Issuing Office.

2.02 Complete sets of Bidding Documents must be used in preparing Bids; neither OWNER nor ENGINEER assumes any responsibility for errors or misinterpretations resulting from the use of incomplete sets of Bidding Documents.

2.03 OWNER and ENGINEER in making copies of Bidding Documents available on the above terms do so only for the purpose of obtaining Bids for the Work and do not confer a license or grant for any other use.

ARTICLE 3: QUALIFICATIONS OF BIDDERS

3.01 To demonstrate Bidder's qualifications to perform the Work, Bidder shall submit written evidence such as financial data, previous experience, present commitments, and such other data as may be called for below.

A. <u>Section 00400 Statement of Bidder's Experience, including Attachments A – I.</u>

ARTICLE 4: EXAMINATION OF BIDDING DOCUMENTS, OTHER RELATED DATA, AND SITE

4.01 *Subsurface and Physical Conditions*

A. The Supplementary Conditions identify:

1. Those reports of explorations and tests of subsurface conditions at or contiguous to the Site that Engineer has used in preparing the Bidding Documents.

2. Those drawings of physical conditions in or relating to existing surface and subsurface structures at or contiguous to the Site (except Underground Facilities) that ENGINEER has used in preparing the Bidding Documents.

B. Copies of reports and drawings referenced in paragraph 4.01.A will be made available by ENGINEER to any Bidder on request. Those reports and drawings are not part of the Contract Documents, but the "technical data" contained therein upon which Bidder is entitled to rely as provided in paragraph 4.02 of the General Conditions and established in paragraph 4.02 of the Supplementary Conditions. Bidder is responsible for any interpretation or conclusion Bidder draws from any "technical data" or any other data, interpretations, opinions or information contained in such reports or shown or indicated in such drawings.

4.02 *Underground Facilities*

A. Information and data shown or indicated in the Bidding Documents with respect to existing Underground Facilities at or contiguous to the Site is based upon information and data furnished to OWNER and ENGINEER by owners of such Underground Facilities, including OWNER, or others.

4.03 *Hazardous Environmental Condition*

A. The Supplementary Conditions identify those reports and drawings relating to a Hazardous Environmental Condition identified at the Site, if any, that ENGINEER has used in preparing the Bidding Documents.

B. Copies of reports and drawings referenced in paragraph 4.03.A will be made available by OWNER to any Bidder on request. Those reports and drawings are not part of the Contract Documents, but the "technical data" contained therein

upon which Bidder is entitled to rely as provided in paragraph 4.06 of the General Conditions has been identified and established in paragraph 4.06 of the Supplementary Conditions. Bidder is responsible for any interpretation or conclusion Bidder draws from any "technical data" or any other data, interpretations, opinions, or information contained in such reports or shown or indicated in such drawings.

4.04 Provisions concerning responsibilities for the adequacy of data furnished to prospective Bidders with respect to subsurface conditions, other physical conditions and Underground Facilities, and possible changes in the Bidding Documents due to differing or unanticipated conditions appear in paragraphs 4.02, 4.03, and 4.04 of the General Conditions. Provisions concerning responsibilities for the adequacy of data furnished to prospective Bidders with respect to a Hazardous Environmental Condition at the Site, if any, and possible changes in the Contract Documents due to any Hazardous Environmental Condition uncovered or revealed at the Site which was not shown or indicated in the Drawings or Specifications or identified in the Contract Documents to be within the scope of the Work appear in paragraph 4.06 of the General Conditions.

4.05 On request, OWNER will provide Bidder access to the Site to conduct such examinations, investigations, explorations, tests, and studies as Bidder deems necessary for submission of a Bid. Bidder shall fill all holes and clean up and restore the Site to its former condition upon completion of such explorations, investigations, tests, and studies.

4.06 DELETED

4.07 In submitting this Bid, the Bidder represents that:

A. Bidder has examined and carefully studied the Bidding Documents, including any Addenda and the other related data identified in the Bidding Documents;

B. Bidder has visited the Site and become familiar with and is satisfied as to the general, local, and Site conditions that may affect cost, progress, and performance of the Work;

C. Bidder is familiar with and is satisfied as to all federal, state, and local laws and regulations that may affect cost, progress, or performance of the Work;

D. Bidder has carefully studied (1) all reports of explorations and tests of subsurface conditions at or contiguous to the Site and all drawings of physical conditions in or relating to existing surface or subsurface structures at or contiguous to the Site (except Underground Facilities) which have been identified in the Supplementary Conditions as provided in paragraph 4.02 of the General Conditions, and (2) all reports and drawings of a Hazardous Environmental Condition, if any, at the Site

which have been identified in the Supplementary Conditions as provided in paragraph 4.06 of the General Conditions;

E. Bidder has obtained and carefully studied (or accepts the consequences and responsibility for not doing so) all additional or supplementary examinations, investigations, explorations, tests, studies, and data concerning conditions (surface, subsurface, and Underground Facilities) at or contiguous to the Site which may affect cost, progress, or performance of the Work or which relate to any aspect of the means, methods, techniques, sequences, and procedures of construction to be employed by Bidder, including any specific means, methods, techniques, sequences, and procedures of construction expressly required by the Bidding Documents to be employed by Bidder, and safety precautions and programs incident thereto;

F. Bidder does not consider that any further examinations, investigations, explorations, tests, studies, or data are necessary for the determination of its Bid for performance of the Work at the price(s) bid and within the times and in accordance with the other terms and conditions of the Bidding Documents;

G. Bidder is aware of the general nature of the work to be performed by OWNER and others at the Site that relates to the Work as indicated in the Bidding Documents;

H. Bidder has correlated the information known to Bidder, information and observations obtained from visits to the Site, reports and drawings identified in the Bidding Documents, and all additional examinations, investigations, explorations, tests, studies, and data with the Bidding Documents;

I. Bidder has promptly given ENGINEER written notice of all conflicts, errors, ambiguities, or discrepancies that Bidder discovers in the Bidding Documents and confirmed that the written resolution thereof by ENGINEER is acceptable to Bidder; and

J. The Bidding Documents are generally sufficient to indicate and convey understanding of all terms and conditions for the performance of the Work for which this Bid is submitted.

4.08 The submission of a Bid will constitute an incontrovertible representation by Bidder that Bidder has complied with every requirement of this Article 4, that without exception the Bid is premised upon performing and furnishing the Work required by the Bidding Documents and applying any specific means, methods, techniques, sequences, and procedures of construction that may be shown or indicated or expressly required by the Bidding Documents, that Bidder has given ENGINEER written notice of all conflicts, errors, ambiguities, and discrepancies that Bidder has discovered in the Bidding

Documents and the written resolutions thereof by ENGINEER are acceptable to Bidder, and that the Bidding Documents are generally sufficient to indicate and convey understanding of all terms and conditions for performing and furnishing the Work.

ARTICLE 5: PRE-BID CONFERENCE

5.01 A non-mandatory pre-Bid conference will be held virtually at 2:00 p.m. on May 21, 2024 via Microsoft Teams. To attend pre-bid use the Microsoft Teams link provided below. The project site will be available for inspection by prospective bidders immediately following the pre-bid conference. Representatives of OWNER and ENGINEER will be present to discuss the Project. Bidders are encouraged to attend and participate in the conference. ENGINEER will transmit to all prospective Bidders of record such Addenda as ENGINEER considers necessary in response to questions arising at the conference. Oral statements may not be relied upon and will not be binding or legally effective.

Microsoft Teams

Join the meeting now

Meeting ID: 274 259 631 51
Passcode: mwPNUs

Dial-in by phone

+1 512-672-8405,,340566186# United States, Austin
Find a local number
Phone conference ID: 340 566 186#

ARTICLE 6: SITE AND OTHER AREAS

6.01 The Site is identified in the Bidding Documents. All additional lands and access thereto required for temporary construction facilities, construction equipment, or storage of materials and equipment to be incorporated in the Work are to be obtained and paid for by CONTRACTOR. Easements for permanent structures or permanent changes in existing facilities are to be obtained and paid for by OWNER unless otherwise provided in the Bidding Documents.

ARTICLE 7: INTERPRETATIONS AND ADDENDA

7.01 All questions about the meaning or intent of the Bidding Documents are to be submitted to ENGINEER in writing. Interpretations or clarifications considered necessary by ENGINEER in response to such questions will be issued by Addenda mailed or delivered

to all parties recorded by ENGINEER as having received the Bidding Documents. Questions received less than ten days prior to the date for opening of Bids may not be answered. Only questions answered by Addenda will be binding. Oral and other interpretations or clarifications will be without legal effect.

7.02 Addenda may be issued to clarify, correct, or change the Bidding Documents as deemed advisable by OWNER or ENGINEER.

ARTICLE 8: BID SECURITY

8.01 A Bid must be accompanied by Bid security made payable to OWNER in an amount of five percent (5%) of Bidder's maximum Bid price and in the form of a certified or bank check or a Bid Bond [on the form attached] issued by a surety meeting the requirements of paragraphs 5.01 and 5.02 of the General Conditions.

8.02 If the Successful Bidder fails to execute and deliver the Contract Documents and furnish the required contract security within 15 days after the Notice of Award, OWNER may annul the Notice of Award and the Bid security of that Bidder will be forfeited.

8.03 Bid security of Unsuccessful Bidders will be returned upon written request by the Bidder. The bid security will be returned within fourteen days of bid opening to a Bidder who submits a certified or bank check unless OWNER believes Bidder has a reasonable chance of receiving the award. The bid security may be retained by the OWNER until the award of the Agreement by City Council.

ARTICLE 9: CONTRACT TIMES

9.01 The number of days within which, or the dates by which, the Work is to be (a) Substantially Completed and (b) also completed and ready for final payment are set forth in Section 500, Standard Form of Agreement.

ARTICLE 10: LIQUIDATED DAMAGES

10.01 Provisions for liquidated damages, if any, are set forth in Section 500, Standard Form of Agreement, Article 4.03.

ARTICLE 11: SUBSTITUTE AND "OR-EQUAL" ITEMS

11.01 The Contract, if awarded, will be on the basis of materials and equipment specified or described in the Bidding Documents without consideration of possible substitute or "or-equal" items. Whenever it is specified or described in the Bidding Documents that a substitute or "or-equal" item of material or equipment may be furnished or used by CONTRACTOR if acceptable to ENGINEER, application for such acceptance will not be considered by ENGINEER until after the Effective Date of the Agreement. The procedure for submission of any such application by CONTRACTOR and consideration by ENGINEER is set forth in the General Conditions and may be supplemented in the General Requirements.

ARTICLE 12: SUBCONTRACTORS, SUPPLIERS, AND OTHERS

12.01 Bidder shall identify the major Subcontractors Bidder proposes for this Project in Section 00400 Statement of Bidder's Experience. Such list shall be accompanied by an experience statement with pertinent information regarding similar projects and other evidence of qualification for each such Subcontractor, Supplier, individual, or entity as provided on Attachment E of Statement of Bidder's Experience. If OWNER or ENGINEER, after due investigation, has reasonable objection to any proposed Subcontractor, Supplier, individual, or entity, OWNER may, before the Notice of Award is given, request apparent Successful Bidder to submit a substitute, in which case apparent Successful Bidder shall submit an acceptable substitute.

12.02 If apparent Successful Bidder declines to make any such substitution, OWNER may award the Contract to another Bidder that proposes to use acceptable Subcontractors, Suppliers, individuals, or entities. Declining to make requested substitutions will not constitute grounds for forfeiture of the Bid security of any Bidder. Any Subcontractor, Supplier, individual, or entity so listed and against which OWNER or ENGINEER makes no written objection prior to the giving of the Notice of Award will be deemed acceptable to OWNER and ENGINEER subject to revocation of such acceptance after the Effective Date of the Agreement as provided in paragraph 6.06 of the General Conditions.

12.03 CONTRACTOR shall not be required to employ any Subcontractor, Supplier, individual, or entity against whom CONTRACTOR has reasonable objection.

ARTICLE 13: PREPARATION OF BID

13.01 The Bid form is included with the Bidding Documents. Additional copies may be obtained from ENGINEER.

13.02 All blanks on the Bid form shall be completed by printing in ink or by typewriter and the Bid signed. A Bid price shall be indicated for each Bid item listed therein, or the words "No Bid," "No Change," or "Not Applicable" entered.

13.03 A Bid by a corporation shall be executed in the corporate name by the president or a vice-president or other corporate officer accompanied by evidence of authority to sign. The corporate seal shall be affixed and attested by the secretary or an assistant secretary. The corporate address and state of incorporation shall be shown below the signature.

13.04 A Bid by a partnership shall be executed in the partnership name and signed by a partner (whose title must appear under the signature), accompanied by evidence of authority to sign. The official address of the partnership shall be shown below the signature.

13.05 A Bid by a limited liability company shall be executed in the name of the firm by a member and accompanied by evidence of authority to sign. The state of formation of the firm and the official address of the firm must be shown below the signature.

13.06 A Bid by an individual shall show the Bidder's name and official address.

13.07 A Bid by a joint venture shall be executed by each joint venturer in the manner indicated on the Bid form. The official address of the joint venture must be shown below the signature.

13.08 All names shall be typed or printed in ink below the signatures.

13.09 The Bid shall contain an acknowledgment of receipt of all Addenda, the numbers of which shall be filled in on the Bid form.

13.10 The address, telephone number, and email address for communications regarding the Bid shall be shown.

13.11 The Bid shall contain evidence of Bidder's authority and qualification to do business in Texas or covenant to obtain such qualification prior to award of the Contract. Bidder's Texas state contractor license number for, if any, shall also be shown on the Bid form.

ARTICLE 14: BASIS OF BID; EVALUATION OF BIDS

14.01 *Unit Price*

A. Bidders shall submit a Bid on a unit price basis for each item of Work listed in the Bid schedule.

B. The total of all estimated prices will be determined as the sum of the products of the estimated quantity of each item and the unit price Bid for the item. The final quantities and Contract Price will be determined in accordance with paragraph 11.03 of the General Conditions.

C. Discrepancies between the multiplication of units of Work and unit prices will be resolved in favor of the unit prices. Discrepancies between the indicated sum of any column of figures and the correct sum thereof will be resolved in favor of the correct sum. Discrepancies between words and figures will be resolved in favor of the words.

14.02 The Bid price shall include such amounts as the Bidder deems proper for overhead and profit on account of cash allowances, if any, named in the Contract Documents as provided in paragraph 11.03 of the General Conditions.

14.03 As provided by Texas Local Government Code § 252.043(d), the Contract shall be awarded to the lowest responsible Bidder.

ARTICLE 15: SUBMITTAL OF BID

15.01 Each prospective Bidder is furnished one separate unbound copy each of the Bid form, and, if required, the Bid Bond form. The unbound copy of the Bid form shall be completed and **one original and one copy** shall be submitted with the Bid security and the following data:

A. Section 00400 Statement of Bidder's Experience, including Attachments A – I.

15.02 A Bid shall be submitted no later than the date and time prescribed and at the place indicated in the advertisement or Invitation to Bid and shall be enclosed in an opaque sealed envelope plainly marked with the Project title (and, if applicable, the designated portion of the Project for which the Bid is submitted), the Bid Number, the name and address of Bidder, and shall be accompanied by the Bid security and other required documents. If a Bid is sent by mail or other delivery system, the sealed envelope containing the Bid shall be enclosed in a separate envelope plainly marked on the outside with the notation "BID ENCLOSED." A mailed or hand delivered Bid shall be addressed to:

City of Georgetown
ATTN: Senior Buyer
510 W. 9th Street
Georgetown, Texas 78626

ARTICLE 16: MODIFICATION AND WITHDRAWAL OF BID

16.01 A Bid may be modified or withdrawn by an appropriate document duly executed in the manner that a Bid must be executed and delivered to the place where Bids are to be submitted prior to the date and time for the opening of Bids.

16.02 If within 24 hours after Bids are opened any Bidder files a duly signed written notice with OWNER and promptly thereafter demonstrates to the reasonable satisfaction of OWNER that there was a material and substantial mistake in the preparation of its Bid, that Bidder may withdraw its Bid, and the Bid security will be returned. Thereafter, if the Work is rebid, that Bidder will be disqualified from further bidding on the Work.

ARTICLE 17: OPENING OF BIDS

17.01 Bids will be opened at the time and place indicated in the advertisement or Invitation to Bid and, unless obviously non-responsive, read aloud publicly. An abstract of the amounts of the base Bids and major alternates, if any, will be made available to Bidders after the opening of Bids.

ARTICLE 18: BIDS TO REMAIN SUBJECT TO ACCEPTANCE

18.01 All Bids will remain subject to acceptance for the period of time stated in the Bid Form, but OWNER may, in its sole discretion, release any Bid and return the Bid security prior to the end of this period.

ARTICLE 19: AWARD OF CONTRACT

19.01 As permitted by the Texas Local Government Code § 252.043, OWNER reserves the right to reject any or all Bids, including without limitation, nonconforming, nonresponsive, unbalanced, or conditional Bids. OWNER further reserves the right to reject the Bid of any Bidder whom it finds, after reasonable inquiry and evaluation, to be non-responsible. OWNER may reject the Bid of any Bidder if OWNER believes that it would not be in the best interest of the Project to make an award to that Bidder. OWNER reserves the right to waive minor technicalities and make an award to best serve the interest of the OWNER.

19.02 More than one Bid for the same Work from an individual or entity under the same or different names will not be considered. Reasonable grounds for believing that any Bidder

has an interest in more than one Bid for the Work may be cause for disqualification of that Bidder and the rejection of all Bids in which that Bidder has an interest.

19.03 In evaluating Bids, OWNER will consider whether or not the Bids comply with the prescribed requirements, and such alternates, unit prices and other data, as may be requested in the Bid Form or prior to the Notice of Award.

19.04 In evaluating Bidders, OWNER will consider the qualifications of Bidders and may consider the qualifications and experience of Subcontractors, Suppliers, and other individuals or entities proposed for those portions of the Work for which the identity of Subcontractors, Suppliers, and other individuals or entities must be submitted as provided in Section 00400 Statement of Bidder's Experience.

19.05 OWNER may conduct such investigations as OWNER deems necessary to establish the responsibility, qualifications, and financial ability of Bidders, proposed Subcontractors, Suppliers, individuals, or entities to perform the Work in accordance with the Contract Documents.

19.06 If the Contract is to be awarded, OWNER will award the Contract to the lowest responsible Bidder.

19.07 No Contract will be awarded or binding upon OWNER until it has been signed by its Mayor (or by the Mayor Pro Tem or other Council members stated in the City Charter) after having been duly authorized to do so by the City Council of the City of Georgetown.

19.08. Chapter 176 of the Texas Local Government Code requires a person or agent of a person who contracts or seeks to contract for the sale or purchase of property, goods, or services with a local governmental entity to submit a **Conflict of Interest Questionnaire** to the appropriate records administrator of the City not later than the seventh business day after the date the person begins contract discussions or negotiations with the local governmental entity, or submits to the local governmental entity an application, response to a request for proposals or Bids, correspondence, or another writing related to a potential agreement with the local governmental entity. For purposes of this Bid, Bidder may submit the completed form with the Bid. Each Bidder is responsible for verifying it is using the most current form available from www.ethics.state.tx.us. This legislation is subject to change, and each vendor should consult their own attorney regarding the current law. This statement is provided for information purposes only, and submission of a completed Conflict of Interest Questionnaire is not a required element of the Bid.

19.09 Section 2252.908 of the Texas Government Code states that a governmental entity or state agency may not enter into certain contracts with a business entity unless the business entity submits a disclosure of interested parties to the governmental entity or state agency at the time the business entity submits the signed contract to the governmental entity or

state agency. The law applies only to a contract of a governmental entity or state agency that either (1) requires an action or vote by the governing body of the entity or agency before the contract may be signed or (2) has a value of at least $1 million.

All contractors entering into a contract that is approved by City Council must complete a Form 1295.

A business entity must enter the required information on Form 1295 online at https://www.ethics.state.tx.us/whatsnew/elf_info_form1295.htm and print a copy of the completed form, which will include a certification of filing that will contain a unique certification number. An authorized agent of the business entity must sign the printed copy of the form and have the form notarized. The completed Form 1295 with the certification of filing must be submitted to the City.

ARTICLE 20: CONTRACT SECURITY AND INSURANCE

20.01 Article 5 of the General Conditions, as may be modified by the Supplementary Conditions, sets forth OWNER'S requirements as to performance and payment Bonds and insurance. When the Successful Bidder delivers the executed Agreement to OWNER, it must be accompanied by such Bonds.

20.02 The CONTRACTOR shall not commence Work until he has furnished certification of all insurance required and such has been approved by the City of Georgetown, nor shall the CONTRACTOR allow any subcontractor to commence Work until proof of all similar insurance that is required of the Subcontractor has been furnished and approved. The OWNER must be an additional insured on the policies and the policies must provide coverage to OWNER for work under this Contract. A certificate of insurance that contains the following language, or similar language, **WILL NOT BE ACCEPTED** as evidence that OWNER is an additional insured and covered under the policies: "ISSUED AS A MATTER OF INFORMATION ONLY AND CONFERS NO RIGHTS UPON THE CERTIFICATE HOLDER. THIS CERTIFICATE DOES NOT AMEND, EXTEND, OR ALTER THE COVERAGE AFFORDED BY THE POLICIES BELOW." The Certificate of Liability Insurance form included in the Bid Documents must be used by the CONTRACTOR's Insurer, and CONTRACTOR's Insurer must furnish a full and complete copy of the underlying insurance policy to the OWNER upon OWNER's request to establish proof of insurance.

20.03 If the Bidder's insurance company is authorized, pursuant to its agreement with Bidder, to arrange for the replacement of a loss, rather than by making a cash payment directly to the City of Georgetown, the insurance company must furnish or have furnished by Bidder, a

performance bond in accordance with Chapter 2253.021(b), Texas Government Code, and a payment bond in accordance with Chapter 2253.021(c), Texas Government Code.

ARTICLE 21: SIGNING OF AGREEMENT

21.01 When OWNER gives a Notice of Award to the Successful Bidder, it shall be accompanied by the required number of unsigned counterparts of the Agreement with the other Contract Documents which are identified in the Agreement as attached thereto. Within 15 days thereafter, Successful Bidder shall sign and deliver the required number of counterparts of the Agreement and attached documents to OWNER. Within ten days thereafter, OWNER shall deliver one fully signed counterpart to Successful Bidder with a complete set of the Drawings with appropriate identification.

ARTICLE 22: SALES AND USE TAXES

22.01 OWNER is exempt from Texas state sales and use taxes on materials and equipment to be incorporated in the Work, pursuant to the provisions of Section 151.309(5) of the Texas Tax Code. Said taxes shall not be included in the Bid. Refer to paragraph 6.10 of the General Conditions for additional information.

ARTICLE 23: RETAINAGE

23.01 Under paragraph 14.02 of the General Conditions, retainage in the amount of five percent (5%) will be withheld pursuant to Texas Government Code § 2253, and such retainage will be withheld until thirty (30) days after Final Completion.

THIS PAGE INTENTIONALLY LEFT BLANK.

SECTION #00300

BID FORM

BIDDER'S NAME_____

PROJECT IDENTIFICATION:

City of Georgetown
South Lake to South Fork Wastewater Improvements

BID NUMBER: 202434

THIS BID IS SUBMITTED TO:

The City of Georgetown, Texas
Georgetown Municipal Court, Purchasing Department
510 W. 9th Street
Georgetown, Texas 78626

1.01 The undersigned Bidder proposes and agrees, if this Bid is accepted, to enter into an Agreement with OWNER in the form included in the Bidding Documents to perform all Work as specified or indicated in the Bidding Documents for the prices and within the times indicated in this Bid and in accordance with the other terms and conditions of the Bidding Documents.

1.02 BIDDER understands and agrees that the OWNER has the right to reject any or all Bids and to waive any minor technicalities.

2.01 Bidder accepts all of the terms and conditions of the Advertisement or Invitation to Bid and Instructions to Bidders, including without limitation those dealing with the disposition of Bid security. The Bid will remain subject to acceptance for 90 days after the Bid opening, or for such longer period of time that Bidder may agree to in writing upon request of OWNER.

3.01 In submitting this Bid, Bidder represents, as set forth in the Agreement, that:

A. Bidder has examined and carefully studied the Bidding Documents, the other related data identified in the Bidding Documents, and the following Addenda, receipt of all which is hereby acknowledged.

Addendum No.	Addendum Date
_____	_____
_____	_____
_____	_____

B. Bidder has visited the Site and become familiar with and is satisfied as to the general, local and Site conditions that may affect cost, progress, and performance of the Work.

C. Bidder is familiar with and is satisfied as to all federal, state and local laws and regulations that may affect cost, progress and performance of the Work.

D. Bidder has carefully studied all: (1) reports of explorations and tests of subsurface conditions at or contiguous to the Site and all drawings of physical conditions in or relating to existing surface or subsurface structures at or contiguous to the Site (except Underground Facilities) which have been identified in the Supplementary Conditions as provided in paragraph 4.02 of the General Conditions, and (2) reports and drawings of a Hazardous Environmental Condition, if any, which has been identified in the Supplementary Conditions as provided in paragraph 4.06 of the General Conditions.

E. Bidder has obtained and carefully studied (or assumes responsibility for having done so) all additional or supplementary examinations, investigations, explorations, tests, studies and data concerning conditions (surface, subsurface and Underground Facilities) at or contiguous to the Site which may affect cost, progress, or performance of the Work or which relate to any aspect of the means, methods, techniques, sequences, and procedures of construction to be employed by Bidder, including applying the specific means, methods, techniques, sequences, and procedures of construction expressly required by the Bidding Documents to be employed by Bidder, and safety precautions and programs incident thereto.

F. Bidder does not consider that any further examinations, investigations, explorations, tests, studies, or data are necessary for the determination of this Bid for performance of the Work at the price(s) bid and within the times and in accordance with the other terms and conditions of the Bidding Documents.

G. Bidder is aware of the general nature of work to be performed by OWNER and others at the Site that relates to the Work as indicated in the Bidding Documents.

H. Bidder has correlated the information known to Bidder, information and observations obtained from visits to the Site, reports and drawings identified in the Bidding Documents, and all additional examinations, investigations, explorations, tests, studies, and data with the Bidding Documents.

I. Bidder has given ENGINEER written notice of all conflicts, errors, ambiguities, or discrepancies that Bidder has discovered in the Bidding Documents, and the written resolution thereof by ENGINEER is acceptable to Bidder.

J. The Bidding Documents are generally sufficient to indicate and convey understanding of all terms and conditions for the performance of the Work for which this Bid is submitted.

4.01 Bidder further represents that this Bid is genuine and not made in the interest of or on behalf of any undisclosed individual or entity and is not submitted in conformity with any agreement or rules of any group, association, organization or corporation; Bidder has not directly or indirectly induced or solicited any other Bidder to submit a false or sham Bid; Bidder has not solicited or induced any individual or entity to refrain from bidding; and Bidder has not sought by collusion to obtain for itself any advantage over any other Bidder or over OWNER.

5.01 Bidder will complete the Work in accordance with the Contract Documents for the following price(s):

UNIT PRICE SCHEDULE FOR
CITY OF GEORGETOWN
SOUTH LAKE TO SOUTH FORK WASTEWATER IMPROVEMENTS

ITEM NO.	ESTIMATED QUANTITY	UNIT	ITEM DESCRIPTION & PRICE IN WORDS	UNIT PRICE IN FIGURES	TOTAL ESTIMATED PRICE
1	1	LS	Insurance, Bonds, and Move-In Related Expenses not to exceed 5% of Total Bid, the sum of _____ _____dollars and _____cents per unit	$_____	$_____
2	1	LS	Storm Water Pollution Prevention Plan (SWPPP) and SWPPP Implementation, including installing the erosion and sedimentation control devices shown on the Drawings including all silt fence, mulch socks, stabilized construction entrances, and all other required temporary sedimentation and erosion control best management practices as required by the SWPPP plan, complete in place as detailed and specified and in accordance with specifications, laws, rules and assumption of responsibility for plan and control, the sum of _____ _____dollars and _____cents per unit	$_____	$_____
3	300	LF	Additional Mulch Sock (above that shown on the drawings) installed at the direction of the Engineer and/or Inspector, complete in place as detailed and specified, including maintenance and removal, the sum of _____ _____dollars and _____cents per unit	$_____	$_____
4	300	LF	Additional Silt Fence (above that shown on the drawings) installed at the direction of the Engineer and/or	$_____	$_____

ITEM NO.	ESTIMATED QUANTITY	UNIT	ITEM DESCRIPTION & PRICE IN WORDS	UNIT PRICE IN FIGURES	TOTAL ESTIMATED PRICE
			Inspector, complete in place as detailed and specified, including maintenance and removal, the sum of _____ _____dollars and _____cents per unit		
5	1	LS	Construction staking and easement surveying, all work fully performed, the sum of _____ _____dollars and _____cents per unit	$_____	$_____
6	220,000	SY	Site and Right-of-Way Preparation, including clearing and grubbing, and all appurtenances, complete in place as detailed and specified, including maintenance and removal, the sum of _____ _____dollars and _____cents per unit	$_____	$_____
7	1	LS	Tree Removal (any trees removed shall be approved by Owner and recorded by size and type), the sum of _____ _____dollars and _____cents per unit	$_____	$_____
8	1	LS	Tree Protection Fencing, the sum of _____ _____dollars and _____cents per unit	$_____	$_____
9	1	LS	Traffic control plan (designed by licensed Engineer in the State of Texas) to be submitted to the City of Georgetown, TxDOT, and Williamson County and to be maintained, all work	$_____	$_____

ITEM NO.	ESTIMATED QUANTITY	UNIT	ITEM DESCRIPTION & PRICE IN WORDS	UNIT PRICE IN FIGURES	TOTAL ESTIMATED PRICE
			fully performed, the sum of _____ _____dollars and _____cents per unit		
10	25,000	LF	Trench Safety Plan and Implementation, as required for all excavation pipe trenches deeper than 5 feet, as required by the Occupational Safety and Health Administration and the assumption of responsibility for said system, the sum of _____ _____dollars and _____cents per unit	$_____	$_____
11	100	LF	Removal, Temporary Relocation, and Restoration of Existing Wire Fence, the sum of _____ _____dollars and _____cents per unit	$_____	$_____
12	35	WK	Weekly street cleaning of the roads and public roadways impacted by this project, the sum of _____ _____dollars and _____cents per unit	$_____	$_____
13	1,300	LF	Furnish and install 12-inch Diameter C900 DR 18 PVC Force Main (All Depths) by Open Cut, tracer wire and all related items, complete and in place, the sum of _____ _____dollars and _____cents per unit	$_____	$_____

ITEM NO.	ESTIMATED QUANTITY	UNIT	ITEM DESCRIPTION & PRICE IN WORDS	UNIT PRICE IN FIGURES	TOTAL ESTIMATED PRICE
14	5,550	LF	Furnish and install 18-inch Diameter C900 DR 18 Force Main (All Depths) by Open Cut, tracer wire and all related items, complete and in place, the sum of _____ _____dollars and _____cents per unit	$_____	$_____
15	12,500	LBS	Furnish and Install Ductile Iron Fittings complete and in place, for Dollars and Cents, the sum of _____ _____dollars and _____cents per unit	$_____	$_____
16	25	LF	Furnish and install 8-inch diameter PVC (SDR 26 ASTM D3034) Gravity Sewer Pipe by Open Cut, the sum of _____ _____dollars and _____cents per unit	$_____	$_____
17	0 (reserved for future use as needed)	LF	Furnish and install 12-inch diameter PVC (SDR 26 ASTM D3034) Gravity Sewer Pipe by Open Cut, the sum of _____ _____dollars and _____cents per unit	$_____	$_____
18	9,500	LF	Furnish and install 15-inch diameter PVC (SDR 26 ASTM D3034) Gravity Sewer Pipe by Open Cut, the sum of _____ _____dollars and _____cents per unit	$_____	$_____
19	590	LF	Furnish and install 24-inch diameter PVC (SDR 26/PS115 ASTM F679) Gravity Sewer Pipe by Open Cut, the	$_____	$_____

ITEM NO.	ESTIMATED QUANTITY	UNIT	ITEM DESCRIPTION & PRICE IN WORDS	UNIT PRICE IN FIGURES	TOTAL ESTIMATED PRICE
			sum of _____ _____dollars and _____cents per unit		
20	7,900	LF	Furnish and install 30-inch diameter PVC (SDR 26/PS115 ASTM F679) Gravity Sewer Pipe by Open Cut, the sum of _____ _____dollars and _____cents per unit	$_____	$_____
21	172	LF	Furnish and install 36-inch diameter FRP/HOBAS (ASTM D 3262) SN72 Gravity Sewer pipe, by Open Cut, complete and in place, the sum of _____ _____dollars and _____cents per unit	$_____	$_____
22	125	LF	Furnish and install 18-inch diameter C900 DR-18 PVC Force Main inside 36-inch steel casing, by Other Than Open Cut for crossing of unnamed creek near the Middle Fork of San Gabriel River Crossing No. 1, including access/receiving pits, tracer wire, and all related items, complete and in place, the sum of _____ _____dollars and _____cents per unit	$_____	$_____
23	80	LF	Furnish and install 18-inch diameter C900 DR 18 PVC Force Main inside 36-inch steel casing, by Other Than Open Cut for Middle Fork of San Gabriel River Crossing No. 2, including access/receiving pits, tracer wire, and all related items, complete and in	$_____	$_____

ITEM NO.	ESTIMATED QUANTITY	UNIT	ITEM DESCRIPTION & PRICE IN WORDS	UNIT PRICE IN FIGURES	TOTAL ESTIMATED PRICE
			place, the sum of _____ _____dollars and _____cents per unit		
24	104	LF	Furnish and install 36-inch diameter FRP/HOBAS (ASTM D 3262) SN72 Gravity Sewer pipe inside 54-inch steel casing, by Other Than Open Cut for crossing of unnamed creek near the Middle Fork of San Gabriel River, including access/receiving pits, tracer wire, and all related items, complete and in place, the sum of _____ _____dollars and _____cents per unit	$_____	$_____
25	185	LF	Furnish and install 24-inch diameter PVC (SDR 26/PS115 ASTM F679) Gravity Sewer Pipe inside 42-inch steel casing, by Other Than Open Cut for State Highway 29 crossing, including access/receiving pits, and all related items, complete and in place, the sum of _____ _____dollars and _____cents per unit	$_____	$_____
26	3	EA	Furnish and Install 18-inch Gate Valve, tracer wire, test station, and all related items, the sum of _____ _____dollars and _____cents per unit	$_____	$_____
27	32	EA	Furnish and Install Standard 4-ft Diameter Precast Concrete Watertight Manhole up to 10-feet, complete and in place, the sum of	$_____	$_____

ITEM NO.	ESTIMATED QUANTITY	UNIT	ITEM DESCRIPTION & PRICE IN WORDS	UNIT PRICE IN FIGURES	TOTAL ESTIMATED PRICE
			_____ _____dollars and _____cents per unit		
28	33	EA	Furnish and Install Standard 5-ft Diameter Precast Concrete Watertight Manhole up to 10-feet, complete and in place, the sum of _____ _____dollars and _____cents per unit	$_____	$_____
29	2	EA	Furnish and Install Standard 6-ft Diameter Precast Concrete Watertight Manhole up to 10-feet, complete and in place, the sum of _____ _____dollars and _____cents per unit	$_____	$_____
30	120	VF	Additional depth for Standard 4-ft Diameter Precast Concrete Watertight Manhole, complete and in place, the sum of _____ _____dollars and _____cents per unit	$_____	$_____
31	175	VF	Additional depth for Standard 5-ft Diameter Precast Concrete Watertight Manhole, complete and in place, the sum of _____ _____dollars and _____cents per unit	$_____	$_____
32	25	VF	Additional depth for Standard 6-ft Diameter Precast Concrete Watertight Manhole, complete and in place, the sum of	$_____	$_____

ITEM NO.	ESTIMATED QUANTITY	UNIT	ITEM DESCRIPTION & PRICE IN WORDS	UNIT PRICE IN FIGURES	TOTAL ESTIMATED PRICE
			_____ _____dollars and _____cents per unit		
33	1	LS	Furnish and Install New 6-foot Diameter Force Main Discharge Manhole at 18-in pipe discharge including manhole top slab, all buried and inside manhole ductile iron pipe, PVC to DI transition fitting, reinforced concrete thrust collar, pipe thrust restraint, valve, pipe, vents, and all appurtenances, the sum of _____ _____dollars and _____cents per unit	$_____	$_____
34	1	LS	Furnish and Install New Doghouse Manhole and 30-in Diameter External Drop Connection over Existing 36-inch Hobas/FRP South Fork Interceptor, the sum of _____ _____dollars and _____cents per unit	$_____	$_____
35	10	VF	Furnish and Install 12-in diameter PVC (SDR26 D3034) External Drop Connection, the sum of _____ _____dollars and _____cents per unit	$_____	$_____
36	55	VF	Furnish and Install 15-in diameter PVC (SDR26 D3034) External Drop Connection, the sum of _____ _____dollars and _____cents per unit	$_____	$_____

ITEM NO.	ESTIMATED QUANTITY	UNIT	ITEM DESCRIPTION & PRICE IN WORDS	UNIT PRICE IN FIGURES	TOTAL ESTIMATED PRICE
37	110	VF	Furnish and Install 30-in diameter PVC (SDR26 D3034) External Drop Connection, the sum of _____ _____dollars and _____cents per unit	$_____	$_____
38	67	EA	Furnish and Install manhole frame and cover, the sum of _____ _____dollars and _____cents per unit	$_____	$_____
39	8	EA	Furnish and Install watertight (bolted and gasketed) manhole frame and cover, the sum of _____ _____dollars and _____cents per unit	$_____	$_____
40	16	EA	Furnish and Install Manhole Vents at designated locations, complete and in place, the sum of _____ _____dollars and _____cents per unit	$_____	$_____
41	1	LS	New Epoxy Coating System of All Sewer Manholes including surface preparation, inspection, testing, and coating application, the sum of _____ _____dollars and _____cents per unit	$_____	$_____
42	1	LS	Dewatering, including both in advance of, and during, construction activities, complete and in place, the sum of _____	$_____	$_____

ITEM NO.	ESTIMATED QUANTITY	UNIT	ITEM DESCRIPTION & PRICE IN WORDS	UNIT PRICE IN FIGURES	TOTAL ESTIMATED PRICE
			_____dollars and _____cents per unit		
43	220,000	SY	Hydromulch seeding in open areas (seed mixture to match native grasses), complete and in place, the sum of _____ _____dollars and _____cents per unit	$_____	$_____
44	6	EA	Furnish and install 3" Combination Air Valve Assemblies, including fittings and vault, and all other appurtenant work, complete and in place as specified and indicated in the plans, the sum of _____ _____dollars and _____cents per unit	$_____	$_____
45	200	LF	Furnish and Install Class I Void Mitigation Measures, including excavation, materials, labor, documentation and reporting, complete in place as detailed and specified, per linear foot of trench, the sum of _____ _____dollars and _____cents per unit	$_____	$_____
46	200	LF	Furnish and Install Class II Void Mitigation Measures, including excavation, materials, labor, documentation and reporting, complete in place as detailed and specified, per linear foot of trench, the sum of _____ _____dollars	$_____	$_____

ITEM NO.	ESTIMATED QUANTITY	UNIT	ITEM DESCRIPTION & PRICE IN WORDS	UNIT PRICE IN FIGURES	TOTAL ESTIMATED PRICE
			and _____cents per unit		
47	200	LF	Furnish and Install Class III Void Mitigation Measures, including excavation, materials, labor, documentation and reporting, complete in place as detailed and specified, per linear foot of trench, the sum of _____ _____dollars and _____cents per unit	$_____	$_____
48	200	LF	Furnish and Install Class V Void Mitigation Measures, including excavation, materials, labor, documentation and reporting, complete in place as detailed and specified, per linear foot of trench, the sum of _____ _____dollars and _____cents per unit	$_____	$_____
49	65	SY	Asphalt Roadway Pavement Trench Repair (6" Min. thickness), complete and in place, the sum of _____ _____dollars and _____cents per unit	$_____	$_____
50	175	SY	Concrete Roadway Replacement (7" Min. thickness), complete and in place, the sum of _____ _____dollars and _____cents per unit	$_____	$_____
51	100	CY	3,000 psi concrete to be used at the Owner's discretion, the sum of _____	$_____	$_____

ITEM NO.	ESTIMATED QUANTITY	UNIT	ITEM DESCRIPTION & PRICE IN WORDS	UNIT PRICE IN FIGURES	TOTAL ESTIMATED PRICE
			_____dollars and _____cents per unit		
52	100	CY	Flowable fill to be used at the Owner's discretion, the sum of _____ _____dollars and _____cents per unit	$_____	$_____
53	100	CY	Concrete for pipe caps or encasement, complete and in place, the sum of _____ _____dollars and _____cents per unit	$_____	$_____
54	1	LS	Pressure Testing All Force Main Pipe, the sum of _____ _____dollars and _____cents per unit	$_____	$_____
55	1	LS	Low Pressure Air Testing All Gravity Sewer Pipe, the sum of _____ _____dollars and _____cents per unit	$_____	$_____
56	1	LS	Manhole Testing, the sum of _____ _____dollars and _____cents per unit	$_____	$_____
57	1	LS	Mandrel Testing All Gravity Sewer Pipe, the sum of _____ _____dollars and _____cents per unit	$_____	$_____
58	2	EA	Project Identification Signage (8-ft by	$_____	$_____

ITEM NO.	ESTIMATED QUANTITY	UNIT	ITEM DESCRIPTION & PRICE IN WORDS	UNIT PRICE IN FIGURES	TOTAL ESTIMATED PRICE
			4-ft) per Section CIP15, the sum of _____ _____dollars and _____cents per unit		
59	50	EA	Pipeline Marker Signs, the sum of _____ _____dollars and _____cents per unit	$_____	$_____
60	1	LS	Pre-Construction Video, all work fully performed, the sum of _____ _____dollars and _____cents per unit	$_____	$_____
61	1	LS	Post-Construction GPS Survey, all work fully performed, the sum of _____ _____dollars and _____cents per unit	$_____	$_____
62	1	LS	Owner-held Contingency, the sum of **FIVE HUNDRED THOUSAND** Dollars and **ZERO** Cents at Actual Cost.	$500,000	$500,000

TOTAL BID AMOUNT (BID ITEM Nos. 1 - 62)

$_____
(FIGURE)

$_____ dollars and

_____cents
(WRITTEN)

Unit Prices have been computed in accordance with paragraph 11.03.B of the General Conditions.

Bidder acknowledges that estimated quantities are not guaranteed, and are solely for the purpose of comparison of Bids, and final payment for all Unit Price Bid items will be based on actual quantities provided, determined as provided in the Contract Documents.

6.01 Bidder agrees that the Work will be substantially complete within 335 calendar days after the date of the written Notice-to-Proceed and to fully complete project and ready for final payment within 425 calendar days after the date of the written Notice to Proceed.

6.02 Bidder accepts the provisions of the Agreement as to liquidated damages in the event of failure to complete the Work within the times specified above, which shall be stated in the Agreement.

7.01 The following documents are attached to and made a condition of this Bid:

A. Required Bid security in the form of _____;

B. Section 00400, Statement of Bidder's Experience, including Attachments A – I.

8.01 The terms used in this Bid with initial capital letters have the meanings indicated in the Instructions to Bidders, the General Conditions, and the Supplementary Conditions.

SUBMITTED on _____, 20____.

If Bidder is:

An Individual

Name (typed or printed): _____

By: _____ (SEAL)
(Individual's signature)
Doing business as: _____
Business address: _____
_____
Phone No.: _____ FAX No.: _____

A Partnership

Partnership Name: _____ (SEAL)

By: _____
(Signature of general partner -- attach evidence of authority to sign)

Name (typed or printed): _____

Business address: _____

_____

Phone No.: _____ FAX No.: _____

A Corporation

Corporation Name: _____ (SEAL)
State of Incorporation: _____
Type (General Business, Professional, Service, Limited Liability):_____

By: _____
(Signature -- attach evidence of authority to sign)

Name (typed or printed): _____

Title: _____
(CORPORATE SEAL)
Attest _____
(Signature of Corporate Secretary)

Business address: _____

_____

Phone No.: _____ FAX No.: _____

Date of Qualification to do business is _____.

A Joint Venture

Joint Venturer Name: _____ (SEAL)

By: _____
(Signature of joint venture partner -- attach evidence of authority to sign)

Name (typed or printed): _____

Title: _____

Business address: _____

_____

Phone No.: _____ FAX No.: _____

Joint Venturer Name: _____ (SEAL)

By: _____

(Signature -- attach evidence of authority to sign)

Name (typed or printed): _____
Title: _____
Business address: _____

_____

Phone No.: _____ FAX No.: _____

Phone and FAX Number, and Address for receipt of official communications:

_____

_____

(Each joint venturer must sign. The manner of signing for each individual, partnership, and corporation that is a party to the joint venture should be in the manner indicated above.)

This page intentionally left blank.

SECTION #00400

STATEMENT OF BIDDERS EXPERIENCE

BIDDER'S NAME: _____

Project Name: South Lake to South Fork Wastewater Improvements

All questions on this form must be answered and data given must be clear and comprehensive. If necessary, questions may be continued on separately attached sheets.

PART 1, PART 2, and PART 3 below are to be submitted as part of the Bid.

PART 1 – GENERAL

1.1 Bidder must submit Attachments A through I contained in this Statement of Bidder's Experience form signed and notarized with its Bid. Failure to do so will constitute an incomplete Bid, which will be rejected. Information must be provided to the OWNER as part of the formal Bid. Submit the required forms in accordance with Article 10, Section 00100, Instructions to Bidder.

1.2 The Bidder and OWNER agree that, in determining the apparent low Bid, the responsibility of the Bidders will be considered in awarding a Contract for this Project. In connection therewith, all Bidders are required to submit a set of additional completed attachments to the Statement of Bidder's Experience Form for the OWNER's consideration. The Contract will be awarded by the OWNER to the lowest responsible Bidder. Submit the required forms in accordance with Article 10, Section 00100, Instructions to Bidder.

PART 2 – BIDDER'S INFORMATION

2.1 Bidder's Information

In order to make a responsive Bid, Bidder must answer all questions completely and all information must be clear, accurate and comprehensive. If necessary, questions may be answered on separate attached sheets. **The forms to complete this requirement are attached hereto as Attachment A.**

PART 3 – EXPERIENCE REQUIREMENTS

The Bidder must provide the following information with its Bid:

3.1 In order to make a responsive Bid, the Bidder must provide evidence of a minimum of three (3) successfully completed water main or wastewater collection system projects of comparable size, complexity and scope within the United States successfully completed by the Bidder within the past ten (10) years, meeting the criteria listed on this form in subsection 3.1.1, if applicable. This documentation shall be presented sufficiently and completely to demonstrate that water main or

wastewater collection system installations is or are a primary business focus and service provided by the Bidder, and that such services have been successfully provided by the Bidder for at least **ten (10)** continuous year(s). **The forms to complete this requirement are attached hereto as Attachment B.**

If the Bidder chooses to fulfill any of the specific experience requirements listed in this document with subcontracted resources, the Bidder must indicate so on Attachment B, to be submitted with its bid. Additionally, Attachments E and I must be submitted with its bid. In accordance with paragraph 1.1, above.

3.1.1 The Bidder shall demonstrate experience in the following area(s) on its successfully completed projects:

- At least one of the three water main or wastewater collection system pipeline installation projects identified by the Bidder in its experience statement must have been in the Edwards Aquifer Contributing Zone and/or the Edwards Aquifer Recharge Zone.

3.2 In order to make a responsive Bid, the Bidder shall provide information on the experience of its proposed Project Manager and Superintendent by completing Attachment C, located at the end of this Section. The submitted Attachment C should include information and resumes for both the Bidder's Project Manager and Superintendent, indicating a minimum of three (3) successfully completed projects of similar size, complexity, and scope within the past ten (10) years. **The forms to complete this requirement are attached hereto as Attachment C.**

The Bidder shall provide the following information at the time of bid.

3.3 **The same requirements shall apply to each major Subcontractor proposed for this project.** Major Subcontractors for this project: Pipeline Trenchless Technology Contractor. Should it be the intention of the Bidder to perform all or a portion of these services with its own forces, the Bidder shall provide previous project experience in the respective section demonstrating that the Bidder has previously successfully performed these services. Bidder must provide information on each major Subcontractor by completing Attachment D, located at the end of this Section. **The forms to complete this requirement are attached hereto as Attachment D.**

The OWNER seeks CONTRACTORS that can complete the Work within the Contract time given for completion. Anything that might negatively impact a Bidder's ability to timely complete the Work may result in the Bidder being determined to not be the most responsible Bidder.

3.4 **A completed Attachment E (located at the end of this section) providing a list of equipment** that is available to the CONTRACTOR / Subcontractor(s) and **specifically intended to be used on the Work under this Contract,** and notification whether the equipment is owned or to be leased by the CONTRACTOR and/or Subcontractor(s).

3.5 **A completed Attachment F (located at the end of this section) providing a list of the available workforce** for the various disciplines and crafts required for the Work on this project including the number of work crews, and number of employees anticipated to be assigned to the project.

3.6 **A completed Attachment G (located at the end of this section) providing a list of all current projects**, including ***all City of Georgetown projects***. Include the following: a brief statement regarding the job type, the estimated project duration, project contact, and project description of all jobs that Bidder is currently committed to or are currently underway.

3.7 **A completed Attachment H (located at the end of this section) providing a list of all completed projects**, including ***all City of Georgetown projects***. Include the following: a brief statement regarding the job type, the estimated project duration, project contact, and project description of the jobs that Bidder has completed in the past Ten (10) years by calendar year or life of company if less than Ten (10) years.

3.8 **Authentication**

The Bidder must authenticate and acknowledge the preceding information by providing witness in the presence of a notary public duly licensed and authorized to act in that capacity under the laws and statutes of the State of Texas, on the form provided on the following page. **The forms to complete this requirement are attached hereto as Attachment I.**

Attachment A

BIDDER'S INFORMATION

(To be returned with the Bid)

Bidder must answer all questions completely and all information must be clear, accurate and comprehensive. If necessary, questions may be answered on separate attached sheets.

A. Name of Bidder: _____

B. Bidder's Permanent Address: _____

C. Bidder's Phone No.: _____

D. Number of years in business under current company name: _____

(Note: A minimum of Ten (10) year's existence as a business is required under the current company name. Changes in company name during the experience period are acceptable if the continuity of the company structure can be demonstrated. Attach separate documentation, if applicable.)

If response is "YES" for questions E – H, attach brief description or explanation

E. Has the Bidder ever defaulted on a contract?

YES (____) NO (___)

F. Are there currently any judgments, claims, or lawsuits pending against the Bidder?

YES (____) NO (____)

G. Does Bidder currently have any claims, judgments or lawsuits pending against any prior client?

YES (____) NO (____)

H. Is the Bidder or principals of Bidder now, or has the Bidder or principals of Bidder ever been, involved in any bankruptcy or reorganization proceedings?

YES (____) NO (____)

Attachment B

STATEMENT OF EXPERIENCE

(To be returned with the Bid)

Using the summary format included below, list and describe Bidder's construction experience for a minimum of three (3) successfully completed projects of comparable size, scope and complexity to the Work described in the Contract Documents. The Bidder must have completed the projects within the past Ten (10) years. Part 3 of this section outlines the experience requirements which must be demonstrated with the three (3) successfully completed sample projects. (Use additional sheets as deemed necessary or appropriate.)

Are any of the experience requirements outlined in Part 3 to be fulfilled by subcontracted resources? (circle one) YES / NO

NOTE: If yes, Attachment E (Statement of Experience for Bidder's Listed Subcontractors) and Attachment J (Authentication of Post-Bid Submittal) as well as any other required Post-Bid forms must be submitted as a Post-Bid Submittal as outlined in Paragraph 1.2 of Section #00400.

Water or Wastewater Pipeline Project No. 1 - Experience

Name of Project: _____ Location: _____

OWNER's Name and Address: _____

OWNER's Contact Person (Print): _____ Phone/Fax No.:_____/_____

Payment Bond (circle one) YES / NO

Performance Bond (circle one) YES / NO

Initial Contract Price: _____ Final Contract Price: _____

Contract Start Date: _____ (Date of Notice To Proceed)

Contract Time: _____( ) Calendar Days ( ) Working Days

Contract Substantial Completion Date: _____

Actual Substantial Completion Date: _____

If contract completion time extensions were added to the contract as a result of Bidder's responsibilities, provide a short explanation of each.

_____

_____

_____

Project Description and Statement of Relevance to this Contract:

_____

_____

_____

_____

_____

_____

_____

_____

_____

Water or Wastewater Pipeline Project No. 2 - Experience

Name of Project: _____ Location: _____

OWNER's Name and Address: _____

OWNER's Contact Person (Print): _____ Phone/Fax No.:_____/_____

Payment Bond (circle one) YES / NO

Performance Bond (circle one) YES / NO

Initial Contract Price: _____ Final Contract Price: _____

Contract Start Date: _____ (Date of Notice To Proceed)

Contract Time: _____( ) Calendar Days ( ) Working Days

Contract Substantial Completion Date: _____

Actual Substantial Completion Date: _____

If contract completion time extensions were added to the contract as a result of Bidder's responsibilities, provide a short explanation of each.

_____

_____

_____

Project Description and Statement of Relevance to this Contract:

_____

_____

_____

_____

_____

_____

_____

_____

_____

_____

_____

_____

_____

_____

_____

_____

Water or Wastewater Pipeline Project No. 3 - Experience

Name of Project: _____ Location: _____

OWNER's Name and Address: _____

OWNER's Contact Person (Print): _____ Phone/Fax No.:_____/_____

Payment Bond (circle one) YES / NO

Performance Bond (circle one) YES / NO

Initial Contract Price: _____ Final Contract Price: _____

Contract Start Date: _____ (Date of Notice To Proceed)

Contract Time: _____( ) Calendar Days ( ) Working Days

Contract Substantial Completion Date: _____

Actual Substantial Completion Date: _____

If contract completion time extensions were added to the contract as a result of Bidder's responsibilities, provide a short explanation of each.

Project Description and Statement of Relevance to this Contract:

Attachment C

STATEMENT OF EXPERIENCE FOR BIDDER'S LISTED PROJECT MANAGER & SUPERINTENDENT

(To be returned with the Bid)

Attach resumes for the following personnel who will be assigned to this project. The resumes must demonstrate that these individuals have worked on at least three similar, successfully completed projects in the capacity of Project Manager or Superintendent, or other supervisory capacity, as applicable, during the last Ten (10) years.

Project Manager (name): _____

Superintendent (name): _____

Insert Resumes & Experience

Attachment D

STATEMENT OF EXPERIENCE FOR BIDDER'S LISTED SUBCONTRACTORS

(To be returned with the Bid)

Name of Bidder: _____

Bidder must supply the following project history information for each major Subcontractor included for the Work. OWNER may reject any Subcontractor whose project history information OWNER deems insufficient for the task. Bidder must answer all questions completely and all information must be clear, accurate and comprehensive. If necessary, questions may be answered on separate attached sheets. Use multiple copies of Attachment E to ensure a submittal for every Major Subcontractor.

Major Subcontractor's type of work: _____

Name of Major Subcontractor: _____

Subcontractor's Permanent Address: _____

Subcontractor's Phone No.: _____

Number of years in business under current company name: _____

Project No. 1 - Major Subcontractor's Experience Information

Name of Project: _____ Location: _____

OWNER's Name and Address: _____

OWNER's Contact Person (Print): _____ Phone No.:_____

Project Description and Statement of Relevance to this Contract: _____

_____

_____

_____

_____

_____ Subcontract Price: _____

Contract Start Date: _____ (Date of Notice To Proceed)

Contract Time: _____ ( ) Calendar Days ( ) Working Days

Contract Substantial Completion Date: _____

Actual Substantial Completion Date: _____

If contract completion time extensions were added to the contract as a result of subcontract responsibilities, provide a short explanation of each.

_____

_____

_____

_____

Project No. 2 - Major Subcontractor's Experience Information

Name of Project: _____ Location: _____

OWNER's Name and Address: _____

OWNER's Contact Person (Print): _____ Phone No.:_____

Project Description and Statement of Relevance to this Contract: _____

_____

_____

_____

_____

_____ Subcontract Price: _____

Contract Start Date: _____ (Date of Notice To Proceed)

Contract Time: _____ ( ) Calendar Days ( ) Working Days

Contract Substantial Completion Date: _____

Actual Substantial Completion Date: _____

If contract completion time extensions were added to the contract as a result of subcontract responsibilities, provide a short explanation of each.

_____

_____

_____

_____

_____

Project No. 3 - Major Subcontractor's Experience Information

Name of Project: _____ Location: _____

OWNER's Name and Address: _____

OWNER's Contact Person (Print): _____ Phone No.:_____

Project Description and Statement of Relevance to this Contract: _____

_____

_____

_____

_____

_____ Subcontract Price: _____

Contract Start Date: _____ (Date of Notice To Proceed)

Contract Time: _____ ( ) Calendar Days ( ) Working Days

Contract Substantial Completion Date: _____

_____

Actual Substantial Completion Date: _____

If contract completion time extensions were added to the contract as a result of subcontract responsibilities, provide a short explanation of each.

_____

_____

_____

_____

_____

Attachment E

AVAILABLE EQUIPMENT LIST

(To be returned with the Bid)

Provide a list of equipment that is available to the CONTRACTOR / Subcontractor(s) and specifically intended to be used on the Work under this Contract, and notification whether the equipment is owned or to be leased by the CONTRACTOR and/or Subcontractor(s).

EQUIPMENT	**OWNED OR LEASED**	**COMMITTED TO ANOTHER PROJECT?** (Yes / No)	**AVAILABLE / RELEASE DATE**

Use additional pages, as necessary

Attachment F

AVAILABLE WORKFORCE

(To be returned with the Bid)

Provide a list of the available workforce for the various disciplines and crafts required for the Work on this project including the number of work crews, and number and worker classification for each equipment operator, mechanic and laborer for that portion of the Work that Bidder will actually perform.

Number of Anticipated Work Crews: _____

DISCIPLINE OR CRAFT	NO. OF EMPLOYEES	COMMITTED TO ANOTHER PROJECT? (Yes / No)	AVAILABLE / RELEASE DATE
Professional (specify)			
Superintendent			
Technical (specify)			
Skilled Workers (specify)			
Semiskilled Workers (specify)			
Equipment Operators (list)			
Other			
Other			
Other			

Use additional pages, as necessary

Attachment G

CURRENT PROJECT LISTING (INCLUDING ALL CITY OF GEORGETOWN PROJECTS)

(To be returned with the Bid)

Provide a list of **all current projects**, including ***all City of Georgetown projects***. Include the following: a brief statement regarding the job type, the estimated project duration, project contact, and project description of all jobs that Bidder is currently committed to or are currently underway.

Name of Project: _____ Location: _____

Type of Job: _____ City of Georgetown Job? (circle one) Yes / No

Project Start Date: _____ Estimated Completion Date: _____

Project Contact: _____

Brief Description: _____

_____

Name of Project: _____ Location: _____

Type of Job: _____ City of Georgetown Job? (circle one) Yes / No

Project Start Date: _____ Estimated Completion Date: _____

Project Contact: _____

Brief Description: _____

_____

Name of Project: _____ Location: _____

Type of Job: _____ City of Georgetown Job? (circle one) Yes / No

Project Start Date: _____ Estimated Completion Date: _____

Project Contact: _____

Brief Description: _____

_____

Name of Project: _____ Location: _____

Type of Job: _____ City of Georgetown Job? (circle one) Yes / No

Project Start Date: _____ Estimated Completion Date: _____

Project Contact: _____

Brief Description: _____

_____

Use additional pages, as necessary

Attachment H

PROJECT HISTORY LISTING (INCLUDING ALL CITY OF Georgetown PROJECTS)

(To be returned with the Bid)

Provide a list of **all completed projects**, including ***all Public projects***. Include the following: a brief statement regarding the job type, the estimated project duration, project contact, and project description of the jobs that Bidder has completed in the past Ten (10) years by calendar year or life of company if less than Ten (10) years.

Calendar Year of _____

Name of Project: _____ Location: _____

Type of Job: _____ City of Georgetown Job? (circle one) Yes / No

Project Duration: _____ Project Contact: _____

Brief Description: _____

_____

Name of Project: _____ Location: _____

Type of Job: _____ City of Georgetown Job? (circle one) Yes / No

Project Duration: _____ Project Contact: _____

Brief Description: _____

_____

Name of Project: _____ Location: _____

Type of Job: _____ City of Georgetown Job? (circle one) Yes / No

Project Duration: _____ Project Contact: _____

Brief Description: _____

_____

Name of Project: _____ Location: _____

Type of Job: _____ City of Georgetown Job? (circle one) Yes / No

Project Duration: _____ Project Contact: _____

Brief Description: _____

_____

____Use additional pages as necessary to achieve a representative listing covering Ten (10) years

Attachment I

AUTHENTICATION OF BID SUBMITTAL

(To be returned with the Bid)

The Bidder must authenticate and acknowledge the preceding information by providing witness in the presence of a notary public duly licensed and authorized to act in that capacity under the laws and statutes of the State of Texas, on the form provided on the following page.

NOTARIZE ONLY THE LAST PAGE OF THIS FORM

Signed By: _____ Typed Name: _____
_____

Typed Title: _____
_____

Limited Partnership Acknowledgement

State of Texas

County of _____

Before me _____ (insert Notary's name), a Notary Public, on this day personally appeared _____ (insert name of person signing on behalf of general partner of limited partnership), _____, title of officer or manager and _____, name of corporation or LLC); the General Partner of _____ (insert name of limited partnership), known to me personally or on the basis of legally sufficient identification to be the person whose name is subscribed to the foregoing instrument and acknowledged to me that he or she executed the same for the purposes and consideration therein expressed.

[Seal] Given under my hand and seal of office this __day of _____, A.D., 20_____.

_____
Notary Public, State of Texas

Signed By: _____ Typed Name: _____
_____

Typed Title: _____
_____

Corporation or Limited Liability Company Acknowledgement

State of Texas

County of _____

Before me _____ (insert Notary's name), a Notary Public, on this day personally appeared _____ (insert name of person signing on behalf of corporation or LLC) as _____ (title of officer or manager and name of corporation or LLC); known to me personally or on the basis of legally sufficient identification to be the person whose name is subscribed to the foregoing instrument and acknowledged to me that he or she executed the same for the purposes and consideration therein expressed.

[Seal] Given under my hand and seal of office this __day of _____, A.D., 20_____.

_____

Notary Public, State of Texas

This page intentionally left blank.

SECTION #00410

BID BOND

BIDDER (Name and Address):

SURETY (Name and Address of Principal Place of Business):

OWNER (Name and Address):
City of Georgetown
808 Martin Luther King Jr. St.
Georgetown, Williamson County, Texas 78626

BID NO. 202434
BID DUE DATE: May 30, 2024
PROJECT: South Lake to South Fork Wastewater Improvements
PROJECT: PRJ000101

BOND
BOND NUMBER:
DATE (Not later than Bid due date):
PENAL SUM:
(Words) (Figures)

IN WITNESS WHEREOF, Surety and Bidder, intending to be legally bound hereby, subject to the terms printed on the reverse side hereof, do each cause this Bid Bond to be duly executed on its behalf by its authorized officer, agent, or representative.

BIDDER	SURETY
_____(Seal)	_____(Seal)
Bidder's Name and Corporate Seal	Surety's Name and Corporate Seal
By: _____	By: _____
Signature and Title	Signature and Title (Attach Power of Attorney)
Attest: _____	Attest: _____
Signature and Title	Signature and Title

Note: (1) Above addresses are to be used for giving required notice.

(2) Any singular reference to Bidder, Surety, OWNER or other party shall be considered plural where applicable.

1. Bidder and Surety, jointly and severally, bind themselves, their heirs, executors, administrators, successors and assigns to pay to OWNER upon default of Bidder the penal sum set forth on the face of this Bond.

2. Default of Bidder shall occur upon the failure of Bidder to deliver within the time required by the Bidding Documents (or any extension thereof agreed to in writing by OWNER) the executed Agreement required by the Bidding Documents and any Performance and Payment Bonds required by the Bidding Documents.

3. This obligation shall be null and void if:

3.1. OWNER accepts Bidder's Bid and Bidder delivers within the time required by the Bidding Documents (or any extension thereof agreed to in writing by OWNER) the executed Agreement required by the Bidding Documents and any Performance and Payment Bonds required by the Bidding Documents, or

3.2. All Bids are rejected by OWNER, or

3.3. OWNER fails to issue a Notice of Award to Bidder within the time specified in the Bidding Documents (or any extension thereof agreed to in writing by Bidder and, if applicable, consented to by Surety when required by paragraph 5 hereof).

4. Payment under this Bond will be due and payable upon default by Bidder and within 30 calendar days after receipt by Bidder and Surety of written notice of default from OWNER, which notice will be given with reasonable promptness, identifying this Bond and the Project and including a statement of the amount due.

5. Surety waives notice of and any and all defenses based on or arising out of any time extension to issue Notice of Award agreed to in writing by OWNER and Bidder, provided that the total time for issuing Notice of Award including extensions shall not in the aggregate exceed 90 days from Bid due date without Surety's written consent.

6. No suit or action shall be commenced under this Bond prior to 30 calendar days after the notice of default required in paragraph 4 above is received by Bidder and Surety and in no case later than one year after Bid due date.

7. Any suit or action under this Bond shall be commenced only in a court of competent jurisdiction located in the state in which the Project is located.

8. Notices required hereunder shall be in writing and sent to Bidder and Surety at their respective addresses shown on the face of this Bond. Such notices may be sent by personal delivery, commercial courier or by United States Registered or Certified Mail, return receipt requested, postage pre-paid, and shall be deemed to be effective upon receipt by the party concerned.

9. Surety shall cause to be attached to this Bond a current and effective Power or Attorney evidencing the authority of the officer, agent or representative who executed this Bond on behalf of Surety to execute, seal and deliver such Bond and bind the Surety thereby.

10. This Bond is intended to conform to all applicable statutory requirements. Any applicable requirement of any applicable statute that has been omitted from this Bond shall be deemed to be included herein as if set forth at length. If any provision of this Bond conflicts with any applicable statute, then the provision of said statute shall govern and the remainder of this Bond that is not in conflict therewith shall continue in full force and effect.

11. The term "Bid" as used herein includes a Bid, offer or proposal as applicable.

THIS PAGE INTENTIONALLY LEFT BLANK.

SECTION #00500
STANDARD FORM OF AGREEMENT BETWEEN OWNER AND CONTRACTOR FOR CONSTRUCTION CONTRACT

THIS AGREEMENT is by and between the City of Georgetown, Texas, a home-rule city and municipal corporation with principal offices located at 808 Martin Luther King, Jr. St., Georgetown, Williamson County, Texas 78626 (Owner) and _____ (Contractor).

Owner and Contractor hereby agree as follows:

ARTICLE 1 – WORK

1.01 Contractor shall complete all Work as specified or indicated in the Contract Documents. The Work is generally described as follows:

South Lake to South Fork Wastewater Improvements

ARTICLE 2 – THE PROJECT

2.01 The Project for which the Work under the Contract Documents may be the whole or only a part is generally described as follows:

A. The project consists of furnishing, installing and providing all labor and materials required for the construction of the South Lake to South Fork Wastewater Improvements project as more fully described in the drawings and the summary of work contained in Section CIP3.

ARTICLE 3 – ENGINEER

3.01 The Project has been designed by: CDM Smith Inc., 8310-1 N. Capital of Texas Hwy., Suite 250, Austin, Texas 78731 (Engineer), which is to act as Owner's representative, assume all duties and responsibilities, and have the rights and authority assigned to Engineer in the Contract Documents in connection with the completion of the Work in accordance with the Contract Documents.

ARTICLE 4 – CONTRACT TIMES

4.01 *Time of the Essence*

A. All time limits for Milestones, if any, Substantial Completion, and completion and readiness for final payment as stated in the Contract Documents are of the essence of the Contract.

Copyright © 2007 National Society of Professional Engineers for EJCDC. All rights reserved.

4.02 *Days to Achieve Substantial Completion and Final Payment*

A. The Work will be substantially completed within 335 days after the date when the Contract Times commence to run as provided in Paragraph 2.03 of the General Conditions, and completed and ready for final payment in accordance with Paragraph 14.07 of the General Conditions within 425 days after the date when the Contract Times commence to run.

4.03 *Liquidated Damages*

A. Contractor and Owner recognize that time is of the essence as stated in Paragraph 4.01 above and that Owner will suffer financial loss if the Work is not completed within the times specified in Paragraph 4.02 above, plus any extensions thereof allowed in accordance with Article 12 of the General Conditions. The parties also recognize the delays, expense, and difficulties involved in proving in a legal or arbitration proceeding the actual loss suffered by Owner if the Work is not completed on time. Accordingly, instead of requiring any such proof, Owner and Contractor agree that as liquidated damages for delay (but not as a penalty), Contractor shall pay Owner $3,000 for each day that expires after the time specified in Paragraph 4.02 above for Substantial Completion until the Work is substantially complete. After Substantial Completion, if Contractor shall neglect, refuse, or fail to complete the remaining Work within the Contract Time or any proper extension thereof granted by Owner, Contractor shall pay Owner $1,000 for each day that expires after the time specified in Paragraph 4.02 above for completion and readiness for final payment until the Work is completed and ready for final payment.

4.04 Contractor shall commence performance of the Work on the date when the Contract Times commence to run.

ARTICLE 5 – CONTRACT PRICE

5.01 Owner shall pay Contractor for completion of the Work in accordance with the Contract Documents an amount in current funds equal to the sum of the amounts determined pursuant to Paragraphs 5.01.A below:

A. For all Work, at the prices stated in Contractor's Bid, attached hereto as an exhibit or shown below:

$_____
(FIGURES)

_____
(WRITTEN)

5.02 Owner agrees to pay Contractor from available funds for satisfactory performance of this Agreement in accordance with Contract Documents, and Owner agrees to make payment on account thereof as provided in the Contract Documents. Lack of funds shall render this Agreement null and void to the extent funds are not available.

EJCDC C-520 Suggested Form of Agreement Between Owner and Contractor for Construction Contract (Stipulated Price)
Copyright © 2007 National Society of Professional Engineers for EJCDC. All rights reserved.

ARTICLE 6 – PAYMENT PROCEDURES

6.01 *Submittal and Processing of Payments*

A. Contractor shall submit Applications for Payment in accordance with Article 14 of the General Conditions. Applications for Payment will be processed by Engineer as provided in the General Conditions.

6.02 *Progress Payments; Retainage*

A. Owner shall make progress payments on account of the Contract Price on the basis of Contractor's Applications for Payment on or about the **Third Monday** day of each month during performance of the Work as provided in Paragraph 6.02.A.1 below. All such payments will be measured by the schedule of values established as provided in Paragraph 2.07.A of the General Conditions (and in the case of Unit Price Work based on the number of units completed) or, in the event there is no schedule of values, as provided in the General Requirements.

1. Prior to Substantial Completion, progress payments will be made in an amount equal to the percentage indicated below but, in each case, less the aggregate of payments previously made and less such amounts as Engineer may determine or Owner may withhold, including but not limited to liquidated damages, in accordance with Paragraph 14.02 of the General Conditions.

a. **95** percent of Work completed (with the balance being retainage). If the Work has been 50 percent completed as determined by Engineer, and if the character and progress of the Work have been satisfactory to Owner and Engineer, then as long as the character and progress of the Work remain satisfactory to Owner and Engineer, there will be no additional retainage; and

b. **95** percent of cost of materials and equipment not incorporated in the Work (with the balance being retainage).

B. Upon Substantial Completion, Owner shall pay an amount sufficient to increase total payments to Contractor to 100 percent of the Work completed, less such amounts as Engineer shall determine in accordance with Paragraph 14.02.B.5 of the General Conditions and less 200 percent of Engineer's estimate of the value of Work to be completed or corrected as shown on the tentative list of items to be completed or corrected attached to the certificate of Substantial Completion.

6.03 *Final Payment*

A. Upon final completion and acceptance of the Work in accordance with Paragraph 14.07 of the General Conditions, Owner shall pay the remainder of the Contract Price as recommended by Engineer as provided in said Paragraph 14.07.

Copyright © 2007 National Society of Professional Engineers for EJCDC. All rights reserved.

ARTICLE 7 – INTEREST

7.01 All moneys not paid when due as provided in Article 14 of the General Conditions shall bear interest as provided in Tex. Gov. Code Chapter 2251.

ARTICLE 8 – CONTRACTOR'S REPRESENTATIONS

8.01 In order to induce Owner to enter into this Agreement, Contractor makes the following representations:

A. Contractor has examined and carefully studied the Contract Documents and the other related data identified in the Bidding Documents.

B. Contractor has visited the Site and become familiar with and is satisfied as to the general, local, and Site conditions that may affect cost, progress, and performance of the Work.

C. Contractor is familiar with and is satisfied as to all federal, state, and local Laws and Regulations that may affect cost, progress, and performance of the Work.

D. Contractor has carefully studied all: (1) reports of explorations and tests of subsurface conditions at or contiguous to the Site and all drawings of physical conditions relating to existing surface or subsurface structures at the Site (except Underground Facilities), if any, that have been identified in Paragraph SC-4.02 of the Supplementary Conditions as containing reliable "technical data," and (2) reports and drawings of Hazardous Environmental Conditions, if any, at the Site that have been identified in Paragraph SC-4.06 of the Supplementary Conditions as containing reliable "technical data."

E. Contractor has considered the information known to Contractor; information commonly known to contractors doing business in the locality of the Site; information and observations obtained from visits to the Site; the Contract Documents; and the Site-related reports and drawings identified in the Contract Documents, with respect to the effect of such information, observations, and documents on (1) the cost, progress, and performance of the Work; (2) the means, methods, techniques, sequences, and procedures of construction to be employed by Contractor, including any specific means, methods, techniques, sequences, and procedures of construction expressly required by the Contract Documents; and (3) Contractor's safety precautions and programs.

F. Based on the information and observations referred to in Paragraph 8.01.E above, Contractor does not consider that further examinations, investigations, explorations, tests, studies, or data are necessary for the performance of the Work at the Contract Price, within the Contract Times, and in accordance with the other terms and conditions of the Contract Documents.

G. Contractor is aware of the general nature of work to be performed by Owner and others at the Site that relates to the Work as indicated in the Contract Documents.

Copyright © 2007 National Society of Professional Engineers for EJCDC. All rights reserved.

H. Contractor has given Engineer written notice of all conflicts, errors, ambiguities, or discrepancies that Contractor has discovered in the Contract Documents, and the written resolution thereof by Engineer is acceptable to Contractor.

I. The Contract Documents are generally sufficient to indicate and convey understanding of all terms and conditions for performance and furnishing of the Work.

ARTICLE 9 – CONTRACT DOCUMENTS

9.01 *Contents*

A. The Contract Documents consist of the following:

1. This Agreement (pages 1 to 8, inclusive).
2. Performance bond (pages 1 to 2, inclusive).
3. Payment bond (pages 1 to 2, inclusive).
4. Bid bonds (pages 1 to 2, inclusive).
5. Certificate of Insurance
6. Form 1295
7. General Conditions (pages 1 to 48, inclusive).
8. Supplementary Conditions (pages 1 to 13, inclusive).
9. Specifications as listed in the table of contents of the Project Manual.
10. Drawings consisting of 51 sheets with each sheet bearing the following general title: South Lake to South Fork Wastewater Improvements, April 2024.
11. Addenda (numbers _____ to _____, inclusive).
12. Exhibits to this Agreement (enumerated as follows):
    a. Contractor's Bid (pages 00300-1 to 00300-19, inclusive).
    b. Documentation submitted by Contractor prior to Notice of Award (pages _____ to _____, inclusive).
    c. Section 00100 Instructions to Bidders (pages 1 to 13 inclusive).
13. The following which may be delivered or issued on or after the Effective Date of the Agreement and are not attached hereto:

Copyright © 2007 National Society of Professional Engineers for EJCDC. All rights reserved.

a. Notice to Proceed (pages _____ to _____, inclusive).

b. Work Change Directives.

c. Change Orders.

B. The documents listed in Paragraph 9.01.A are attached to this Agreement (except as expressly noted otherwise above).

C. There are no Contract Documents other than those listed above in this Article 9.

D. The Contract Documents may only be amended, modified, or supplemented as provided in Paragraph 3.04 of the General Conditions.

E. To the extent of any direct conflict or inconsistency between any of the Contract Documents, the Contractor shall immediately seek clarification from the Engineer and notify the Owner that clarification has been requested. The Engineer shall clarify such discrepancy, within a reasonable time under the circumstances.

ARTICLE 10 – MISCELLANEOUS

10.01 *Terms*

A. Terms used in this Agreement will have the meanings stated in the General Conditions and the Supplementary Conditions.

10.02 *Assignment of Contract*

A. No assignment by a party hereto of any rights under or interests in the Contract will be binding on another party hereto without the written consent of the party sought to be bound; and, specifically but without limitation, moneys that may become due and moneys that are due may not be assigned without such consent (except to the extent that the effect of this restriction may be limited by law), and unless specifically stated to the contrary in any written consent to an assignment, no assignment will release or discharge the assignor from any duty or responsibility under the Contract Documents.

10.03 *Successors and Assigns*

A. Owner and Contractor each binds itself, its partners, successors, assigns, and legal representatives to the other party hereto, its partners, successors, assigns, and legal representatives in respect to all covenants, agreements, and obligations contained in the Contract Documents.

10.04 *Severability*

A. Any provision or part of the Contract Documents held to be void or unenforceable under any Law or Regulation shall be deemed stricken, and all remaining provisions shall continue to be

Copyright © 2007 National Society of Professional Engineers for EJCDC. All rights reserved.

valid and binding upon Owner and Contractor, who agree that the Contract Documents shall be reformed to replace such stricken provision or part thereof with a valid and enforceable provision that comes as close as possible to expressing the intention of the stricken provision.

10.05 *Contractor's Certifications*

A. Contractor certifies that it has not engaged in corrupt, fraudulent, collusive, or coercive practices in competing for or in executing the Contract. For the purposes of this Paragraph 10.05:

1. "corrupt practice" means the offering, giving, receiving, or soliciting of any thing of value likely to influence the action of a public official in the bidding process or in the Contract execution;

2. "fraudulent practice" means an intentional misrepresentation of facts made (a) to influence the bidding process or the execution of the Contract to the detriment of Owner, (b) to establish Bid or Contract prices at artificial non-competitive levels, or (c) to deprive Owner of the benefits of free and open competition;

3. "collusive practice" means a scheme or arrangement between two or more Bidders, with or without the knowledge of Owner, a purpose of which is to establish Bid prices at artificial, non-competitive levels; and

4. "coercive practice" means harming or threatening to harm, directly or indirectly, persons or their property to influence their participation in the bidding process or affect the execution of the Contract.

10.06 *Waiver of Breach*

A. Waiver of any breach of this Agreement shall not constitute waiver of any subsequent breach.

Copyright © 2007 National Society of Professional Engineers for EJCDC. All rights reserved.

IN WITNESS WHEREOF, Owner and Contractor have signed this Agreement. Counterparts have been delivered to Owner and Contractor. All portions of the Contract Documents have been signed or have been identified by Owner and Contractor or on their behalf.

This Agreement will be effective on _____ (which is the Effective Date of the Agreement).

OWNER:	CONTRACTOR
City of Georgetown	_____
By: _____	By: _____
Title: Josh Schroeder, Mayor	Title: _____
Attest: _____	
Title: City Secretary	
Address for giving notices:	Address for giving notices:
808 Martin Luther King, Jr. St.	_____
Georgetown, TX 78626	_____
_____	_____

APPROVED AS TO FORM:

_____
City Attorney

Copyright © 2007 National Society of Professional Engineers for EJCDC. All rights reserved.

Notice of Award

Date: _____

Project: South lake to South Fork Wastewater Improvements	
Owner: City of Georgetown	Owner's Contract No.: 24-0160-CIP
Contract: 202434	Engineer's Project No.: 272644
Bidder:	
Bidder's Address: *[send Notice of Award Certified Mail, Return Receipt Requested]*	

You are notified that your Bid dated _____ for the above Contract has been considered. You are the Successful Bidder and are awarded a Contract for South Lake to South Fork Wastewater Improvements.

[Indicate total Work, alternates, or sections of Work awarded.]

The Contract Price of your Contract is _____ Dollars ($_____).

[Insert appropriate data if unit prices are used. Change language for cost-plus contracts.]

Three (3) copies of the proposed Contract Documents (except Drawings) accompany this Notice of Award.

_____ sets of the Drawings will be delivered separately or otherwise made available to you immediately.

You must comply with the following conditions precedent within 15 days of the date you receive this Notice of Award.

1. Deliver to the Owner three (3) fully executed counterparts of the Contract Documents.
2. Deliver with the executed Contract Documents the Contract security [Bonds] as specified in the Instructions to Bidders (Article 20), General Conditions (Paragraph 5.01), and Supplementary Conditions (Paragraph SC-5.01).
3. Other conditions precedent:

   _____

Failure to comply with these conditions within the time specified will entitle Owner to consider you in default, annul this Notice of Award, and declare your Bid security forfeited.

Within ten days after you comply with the above conditions, Owner will return to you one fully executed counterpart of the Contract Documents.

_____
Owner

By:_____
Authorized Signature

_____
Title

Copy to Engineer

Notice to Proceed

Date: _____

Project: South Lake to South Fork Wastewater Improvements	
Owner: City of Georgetown	Owner's Contract No.: 202434
Contract: PRJ000101	Engineer's Project No.:
Contractor:	
Contractor's Address: *[send Certified Mail, Return Receipt Requested]*	

You are notified that the Contract Times under the above Contract will commence to run on _____. On or before that date, you are to start performing your obligations under the Contract Documents. In accordance with Article 4 of the Agreement, the number of days to achieve Substantial Completion is 335calendar days, and the date of readiness for final payment is 425 calendar days.

Before you may start any Work at the Site, Paragraph 2.01.B of the General Conditions provides that you and Owner must each deliver to the other (with copies to Engineer and other identified additional insureds and loss payees) certificates of insurance which each is required to purchase and maintain in accordance with the Contract Documents.

Also, before you may start any Work at the Site, you must:

1. Submit and receive approval on the construction sequence and schedule of values.
2. Hold the pre-construction meeting.

_____ _____
Owner
Given by:

_____ _____
Authorized Signature

_____ _____
Title

_____ _____
Date

Copy to Engineer

THIS PAGE INTENTIONALLY LEFT BLANK.

SECTION 00610

TEXAS STATUTORY PERFORMANCE BOND

Bond No.:

KNOW ALL MEN BY THESE PRESENTS:

THAT, _____(hereinafter called the Principal, and _____, a corporation organized and existing under the laws of the State of Texas, licensed to do business in the State of Texas and admitted to write bonds, as surety, (hereinafter called the Surety), are held and firmly bound unto the City of Georgetown, Texas (hereinafter called the Obligee), in the amount of _____Dollars ($_____.____) for the payment whereof, the said Principal and Surety bind themselves, and their heirs, administrators, executors, successors, and assigns, jointly and severally, firmly by these presents.

WHEREAS, the Principal has entered into a certain contract with the Obligee, dated the _____day of _____, 2024 for South Lake to South Fork Wastewater Improvements, which contract is hereinafter referred to as the "Contract."

NOW, THEREFORE, THE CONDITION OF THIS OBLIGATION IS SUCH, that if the said Principal shall faithfully perform the work required by the Contract and shall, in all respects, duly and faithfully observe and perform all and singular the covenants, conditions and agreements in and by said Contract, agreed and covenanted by the Principal to be observed and performed, including but not limited to, the repair of any and all defects in said work occasioned by and resulting from defects in materials furnished by or workmanship of, the Principal in performing the work covered by said Contract and occurring within a period of twelve (12) months from the date of Final Completion and all other covenants and conditions, according to the true intent and meaning of said Contract and the Plans and Specifications hereto annexed, then this obligation shall be void; otherwise to remain in full force and effect;

PROVIDED, HOWEVER, that this bond is executed pursuant to the provisions of Chapter 2253 of the Texas Government Code and all liabilities on this bond shall be determined in accordance with the provision, conditions and limitations of said Chapter to the same extent as if it were copied at length herein.

IN WITNESS WHEREOF, the said Principal and Surety have signed and sealed this instrument this _____day of _____, 2024.

_____	_____
Principal	Surety
_____	_____
Printed Name	Printed Name
By: _____	By: _____
Title: _____	Title: _____
Address: _____	Address: _____
_____	_____

Resident Agent of Surety:

_____
Signature

_____
Printed Name

_____	_____
Street Address	Email
_____	_____
City, State & Zip Code	Telephone Number

THIS PAGE INTENTIONALLY LEFT BLANK.

SECTION 00620

TEXAS STATUTORY PAYMENT BOND

Bond No.:

KNOW ALL MEN BY THESE PRESENTS:

THAT, _____(hereinafter called the Principal), as principal, and _____, a corporation organized and existing under the laws of the State of Texas, licensed to do business in the State of Texas and admitted to write bonds, as surety, (hereinafter called the Surety), are held and firmly bound unto the City of Georgetown, Texas (hereinafter called the Obligee), in the amount of _____ Dollars ($_____.00) for the payment whereof, the said Principal and Surety bind themselves, and their heirs, administrators, executors, successors, and assigns, jointly and severally, firmly by these presents.

WHEREAS, the Principal has entered into a certain contract with the Obligee, dated the _____ day of _____ , 2024 for South Lake to South Fork Wastewater Improvements , which contract is hereinafter referred to as the "Contract."

NOW, THEREFORE, THE CONDITION OF THIS OBLIGATION IS SUCH, that if the said Principal shall pay all claimants supplying labor and material to him or a subcontractor in the prosecution of the work provided for in said Contract, then, this obligation shall be null and void; otherwise to remain in full force and effect;

PROVIDED, HOWEVER, that this bond is executed pursuant to the provisions of Chapter 2253 of the Texas Government Code and all liabilities on this bond shall be determined in accordance with the provision, conditions and limitations of said Chapter to the same extent as if it were copied at length herein.

IN WITNESS WHEREOF, the said Principal and Surety have signed and sealed this instrument this _____ day of _____, 2024.

_____	_____
Principal	Surety
_____	_____
Printed Name	Printed Name
By: _____	By: _____
Title: _____	Title: _____
Address: _____	Address: _____
_____	_____

Resident Agent of Surety:

_____
Signature

_____
Printed Name

_____	_____
Street Address	Email
_____	_____
City, State & Zip Code	Telephone Number

THIS PAGE INTENTIONALLY LEFT BLANK.

SECTION 00650
Certificate of Insurance

THIS PAGE INTENTIONALLY LEFT BLANK

SECTION 00680

Form 1295

THIS PAGE INTENTIONALLY LEFT BLANK

This document has important legal consequences; consultation with an attorney is encouraged with respect to its use or modification. This document should be adapted to the particular circumstances of the contemplated Project and the Controlling Law.

STANDARD GENERAL CONDITIONS OF THE CONSTRUCTION CONTRACT

Prepared by

ENGINEERS JOINT CONTRACT DOCUMENTS COMMITTEE

and

Issued and Published Jointly By

PROFESSIONAL ENGINEERS IN PRIVATE PRACTICE
a practice division of the
NATIONAL SOCIETY OF PROFESSIONAL ENGINEERS

AMERICAN COUNCIL OF ENGINEERING COMPANIES

AMERICAN SOCIETY OF CIVIL ENGINEERS

This document has been approved and endorsed by

The Associated General Contractors of America

Construction Specifications Institute

Copyright © 2002 National Society of Professional Engineers for EJCDC. All rights reserved.

Copyright ©2002

National Society of Professional Engineers
1420 King Street, Alexandria, VA 22314

American Council of Engineering Companies
1015 15th Street, N.W., Washington, DC 20005

American Society of Civil Engineers
1801 Alexander Bell Drive, Reston, VA 20191-4400

These General Conditions have been prepared for use with the Suggested Forms of Agreement Between Owner and Contractor Nos. C-520 or C-525 (2002 Editions). Their provisions are interrelated and a change in one may necessitate a change in the other. Comments concerning their usage are contained in the EJCDC Construction Documents, General and Instructions (No. C-001) (2002 Edition). For guidance in the preparation of Supplementary Conditions, see Guide to the Preparation of Supplementary Conditions (No. C-800) (2002 Edition).

Copyright © 2002 National Society of Professional Engineers for EJCDC. All rights reserved.

TABLE OF CONTENTS

Page

ARTICLE 1 - DEFINITIONS AND TERMINOLOGY 6
1.01 *Defined Terms* 6
1.02 *Terminology* 8
ARTICLE 2 - PRELIMINARY MATTERS 9
2.01 *Delivery of Bonds and Evidence of Insurance* 9
2.02 *Copies of Documents* 9
2.03 *Commencement of Contract Times; Notice to Proceed* 9
2.04 *Starting the Work* 9
2.05 *Before Starting Construction* 9
2.06 *Preconstruction Conference* 9
2.07 *Initial Acceptance of Schedules* 9
ARTICLE 3 - CONTRACT DOCUMENTS: INTENT, AMENDING, REUSE 10
3.01 *Intent* 10
3.02 *Reference Standards* 10
3.03 *Reporting and Resolving Discrepancies* 10
3.04 *Amending and Supplementing Contract Documents* 11
3.05 *Reuse of Documents* 11
3.06 *Electronic Data* 11
ARTICLE 4 - AVAILABILITY OF LANDS; SUBSURFACE AND PHYSICAL CONDITIONS; HAZARDOUS ENVIRONMENTAL CONDITIONS; REFERENCE POINTS 11
4.01 *Availability of Lands* 11
4.02 *Subsurface and Physical Conditions* 12
4.03 *Differing Subsurface or Physical Conditions* 12
4.04 *Underground Facilities* 13
4.05 *Reference Points* 13
4.06 *Hazardous Environmental Condition at Site* 13
ARTICLE 5 - BONDS AND INSURANCE 14
5.01 *Performance, Payment, and Other Bonds* 14
5.02 *Licensed Sureties and Insurers* 15
5.03 *Certificates of Insurance* 15
5.04 *Contractor's Liability Insurance* 15
5.05 *Owner's Liability Insurance* 16
5.06 *Property Insurance* 16
5.07 *Waiver of Rights* 17
5.08 *Receipt and Application of Insurance Proceeds* 17
5.09 *Acceptance of Bonds and Insurance; Option to Replace* 17
5.10 *Partial Utilization, Acknowledgment of Property Insurer* 18
ARTICLE 6 - CONTRACTOR'S RESPONSIBILITIES 18
6.01 *Supervision and Superintendence* 18
6.02 *Labor; Working Hours* 18
6.03 *Services, Materials, and Equipment* 18
6.04 *Progress Schedule* 18
6.05 *Substitutes and "Or-Equals"* 19
6.06 *Concerning Subcontractors, Suppliers, and Others* 20
6.07 *Patent Fees and Royalties* 21
6.08 *Permits* 21
6.09 *Laws and Regulations* 21
6.10 *Taxes* 22
6.11 *Use of Site and Other Areas* 22
6.12 *Record Documents* 22
6.13 *Safety and Protection* 22
6.14 *Safety Representative* 23
6.15 *Hazard Communication Programs* 23

Copyright © 2002 National Society of Professional Engineers for EJCDC. All rights reserved.

6.16 *Emergencies* ... 23
6.17 *Shop Drawings and Samples* ... 23
6.18 *Continuing the Work* ... 24
6.19 *Contractor's General Warranty and Guarantee* ... 24
6.20 *Indemnification* ... 24
6.21 *Delegation of Professional Design Services* ... 25
ARTICLE 7 - OTHER WORK AT THE SITE ... 25
7.01 *Related Work at Site* ... 25
7.02 *Coordination* ... 26
7.03 *Legal Relationships* ... 26
ARTICLE 8 - OWNER'S RESPONSIBILITIES ... 26
8.01 *Communications to Contractor* ... 26
8.02 *Replacement of Engineer* ... 26
8.03 *Furnish Data* ... 26
8.04 *Pay When Due* ... 26
8.05 *Lands and Easements; Reports and Tests* ... 26
8.06 *Insurance* ... 26
8.07 *Change Orders* ... 26
8.08 *Inspections, Tests, and Approvals* ... 26
8.09 *Limitations on Owner's Responsibilities* ... 27
8.10 *Undisclosed Hazardous Environmental Condition* ... 27
8.11 *Evidence of Financial Arrangements* ... 27
ARTICLE 9 - ENGINEER'S STATUS DURING CONSTRUCTION ... 27
9.01 *Owner's Representative* ... 27
9.02 *Visits to Site* ... 27
9.03 *Project Representative* ... 27
9.04 *Authorized Variations in Work* ... 27
9.05 *Rejecting Defective Work* ... 27
9.06 *Shop Drawings, Change Orders and Payments* ... 28
9.07 *Determinations for Unit Price Work* ... 28
9.08 *Decisions on Requirements of Contract Documents and Acceptability of Work* ... 28
9.09 *Limitations on Engineer's Authority and Responsibilities* ... 28
ARTICLE 10 - CHANGES IN THE WORK; CLAIMS ... 28
10.01 *Authorized Changes in the Work* ... 28
10.02 *Unauthorized Changes in the Work* ... 29
10.03 *Execution of Change Orders* ... 29
10.04 *Notification to Surety* ... 29
10.05 *Claims* ... 29
ARTICLE 11 - COST OF THE WORK; ALLOWANCES; UNIT PRICE WORK ... 30
11.01 *Cost of the Work* ... 30
11.02 *Allowances* ... 31
11.03 *Unit Price Work* ... 31
ARTICLE 12 - CHANGE OF CONTRACT PRICE; CHANGE OF CONTRACT TIMES ... 32
12.01 *Change of Contract Price* ... 32
12.02 *Change of Contract Times* ... 33
12.03 *Delays* ... 33
ARTICLE 13 - TESTS AND INSPECTIONS; CORRECTION, REMOVAL OR ACCEPTANCE OF DEFECTIVE WORK ... 33
13.01 *Notice of Defects* ... 33
13.02 *Access to Work* ... 33
13.03 *Tests and Inspections* ... 33
13.04 *Uncovering Work* ... 34
13.05 *Owner May Stop the Work* ... 34
13.06 *Correction or Removal of Defective Work* ... 34
13.07 *Correction Period* ... 34
13.08 *Acceptance of Defective Work* ... 35
13.09 *Owner May Correct Defective Work* ... 35
ARTICLE 14 - PAYMENTS TO CONTRACTOR AND COMPLETION ... 36
14.01 *Schedule of Values* ... 36
14.02 *Progress Payments* ... 36
14.03 *Contractor's Warranty of Title* ... 37
14.04 *Substantial Completion* ... 37

Copyright © 2002 National Society of Professional Engineers for EJCDC. All rights reserved.

14.05 *Partial Utilization* 38
14.06 *Final Inspection* 38
14.07 *Final Payment* 38
14.08 *Final Completion Delayed* 39
14.09 *Waiver of Claims* 39
ARTICLE 15 - SUSPENSION OF WORK AND TERMINATION 39
15.01 *Owner May Suspend Work* 39
15.02 *Owner May Terminate for Cause* 39
15.03 *Owner May Terminate For Convenience* 40
15.04 *Contractor May Stop Work or Terminate* 40
ARTICLE 16 - DISPUTE RESOLUTION 41
16.01 *Methods and Procedures* 41
ARTICLE 17 - MISCELLANEOUS 41
17.01 *Giving Notice* 41
17.02 *Computation of Times* 41
17.03 *Cumulative Remedies* 41
17.04 *Survival of Obligations* 41
17.05 *Controlling Law* 41
17.06 *Headings* 41

Copyright © 2002 National Society of Professional Engineers for EJCDC. All rights reserved.

GENERAL CONDITIONS

ARTICLE 1 - DEFINITIONS AND TERMINOLOGY

1.01 *Defined Terms*

A. Wherever used in the Bidding Requirements or Contract Documents and printed with initial capital letters, the terms listed below will have the meanings indicated which are applicable to both the singular and plural thereof. In addition to terms specifically defined, terms with initial capital letters in the Contract Documents include references to identified articles and paragraphs, and the titles of other documents or forms.

1. *Addenda*--Written or graphic instruments issued prior to the opening of Bids which clarify, correct, or change the Bidding Requirements or the proposed Contract Documents. In case of inconsistency between the Contract Documents and any Addenda, the Addenda supersede other Contract Documents.

2. *Agreement*--The written instrument which is evidence of the agreement between Owner and Contractor covering the Work.

3. *Application for Payment*--The form acceptable to Engineer which is to be used by Contractor during the course of the Work in requesting progress or final payments and which is to be accompanied by such supporting documentation as is required by the Contract Documents.

4. *Asbestos*--Any material that contains more than one percent asbestos and is friable or is releasing asbestos fibers into the air above current action levels established by the United States Occupational Safety and Health Administration.

5. *Bid*--The offer or proposal of a Bidder submitted on the prescribed form setting forth the prices for the Work to be performed.

6. *Bidder*--The individual or entity who submits a Bid directly to Owner.

7. *Bidding Documents*--The Bidding Requirements and the proposed Contract Documents (including all Addenda).

8. *Bidding Requirements*--The Advertisement or Invitation to Bid, Instructions to Bidders, bid security of acceptable form, if any, and the Bid Form with any supplements.

9. *Change Order*--A document recommended by Engineer which is signed by Contractor and Owner and authorizes an addition, deletion, or revision in the Work or an adjustment in the Contract Price or the Contract Times, issued on or after the Effective Date of the Agreement. Extra Work will not be considered for a Change Order or for an adjustment in the Contract Price or the Contract Times unless the document is executed by both Owner and Contractor. Furthermore, the parties agree that under no circumstances will an act or failure to act on the part of the Owner or the Engineer constitute a waiver of the written Change Order requirement for extra work. A written Change Order is a strict condition precedent for payment of extra work.

10. *Claim*--A demand or assertion by Owner or Contractor seeking an adjustment of Contract Price or Contract Times, or both, or other relief with respect to the terms of the Contract. A demand for money or services by a third party is not a Claim.

11. *Contract*--The entire and integrated written agreement between the Owner and Contractor concerning the Work. The Contract supersedes prior negotiations, representations, or agreements, whether written or oral including, without limitation, all prior iterations of these General Conditions, the Supplementary Conditions, or any other document not specifically listed in the Agreement.

12. *Contract Documents*-- The Contract Documents consist of the Agreement between Owner and Contractor, Conditions of the Contract (General, Supplementary and other Conditions), Drawings, Specifications, Addenda issued prior to execution of the Contract, other documents listed in the Agreement and Modifications issued after execution of the Contract. A Modification is (1) a written amendment to the Contract signed by both parties, (2) a Change Order, (3) a Work Change Directive or (4) a Field Order. Unless specifically enumerated in the Agreement, the Contract Documents do not include other documents such as bidding requirements (advertisement or Invitation to Bid, Instructions to Bidders, sample forms, the Contractor's Bid, portions of Addenda relating to bidding requirements), Approved Shop Drawings, other Contractor submittals, and the reports and drawings of subsurface and physical conditions.

13. *Contract Price*--The moneys payable by Owner to Contractor for completion of the Work in accordance with the Contract Documents as stated in the Agreement (subject to the provisions of Paragraph 11.03 in the case of Unit Price Work).

14. *Contract Times*--The number of days or the dates stated in the Agreement to: (i) achieve Milestones, if any, (ii) achieve Substantial Completion; and (iii) complete the Work so that it is ready for final payment as evidenced by Engineer's written recommendation of final payment.

15. *Contractor*--The individual or entity with whom Owner has entered into the Agreement. For

Copyright © 2002 National Society of Professional Engineers for EJCDC. All rights reserved.

purposes of giving or receiving notice, directives, change orders, or any other information from the Engineer or Owner to the Contractor, the Contractor shall designate one person as Project Manager to receive such notice, directives, change orders, or other information. If the person so identified by the Contractor is not present on the job site during normal working hours for any consecutive 48-hour period, the Contractor shall in writing addressed to the Engineer and Owner identify the individual who is acting as Project Manager.

16. *Cost of the Work*--See Paragraph 11.01.A for definition.

17. *Drawings*--That part of the Contract Documents prepared or approved by Engineer which graphically shows the scope, extent, and character of the Work to be performed by Contractor. Shop Drawings and other Contractor submittals are not Drawings as so defined.

18. *Effective Date of the Agreement*--The date indicated in the Agreement on which it becomes effective, but if no such date is indicated, it means the date on which the Agreement is signed and delivered by the last of the two parties to sign and deliver. However, Contractor has no rights or remedies arising from execution of the Agreement prior to receiving a Notice to Proceed from Owner or Engineer.

19. *Engineer*--The individual or entity named as such in the Agreement. The Engineer shall identify a specific individual to serve as liaison between the Owner and Contractor and between Engineer and Contractor. The Engineer will notify the Owner and Contractor of the name of an acting replacement as Engineer representative whenever the person so designated is not available. Whenever the Contractor or Owner requires information, direction, or assistance, the Contractor or Owner shall notify the individual designated by the Engineer.

20. *Field Order*--A written order issued by Engineer which requires minor changes in the Work but which does not involve a change in the Contract Price or the Contract Times. The Engineer will promptly obtain the signature of the Contractor on all Field Orders. This signature confirms that the Contractor is not entitled to any change in the Contract Price or the Contract Times. The Engineer will endeavor to obtain the signature of the Contractor on all Field Orders on a weekly basis.

21. *General Requirements*--Sections of Division 1 of the Specifications. The General Requirements pertain to all sections of the Specifications.

22. *Hazardous Environmental Condition*--The presence at the Site of Asbestos, PCBs, Petroleum, Hazardous Waste, or Radioactive Material in such quantities or circumstances that may present a substantial danger to persons or property exposed thereto in connection with the Work.

23. *Hazardous Waste*--The term Hazardous Waste shall have the meaning provided in Section 1004 of the Solid Waste Disposal Act (42 USC Section 6903) as amended from time to time.

24. *Laws and Regulations; Laws or Regulations*--Any and all applicable laws, rules, regulations, ordinances, codes, and orders of any and all governmental bodies, agencies, authorities, and courts having jurisdiction.

25. *Liens*--Charges, security interests, or encumbrances upon Project funds, real property, or personal property.

26. *Milestone*--A principal event specified in the Contract Documents relating to an intermediate completion date or time prior to Substantial Completion of all the Work.

27. *Notice of Award*--The written notice by Owner to the Successful Bidder stating that upon timely compliance by the Successful Bidder with the conditions precedent listed therein, Owner, if the Owner decides to proceed with the Work, will sign and deliver the Agreement, to the apparent successful bidder. However, the Notice of Award shall not be construed as an agreement, meeting of the minds, contract, or any other legal obligation between Owner and Contractor. Until Contractor receives a Notice to Proceed from the Owner, the Contractor has no remedy against the Owner.

28. *Notice to Proceed*--A written notice given by Owner to Contractor fixing the date on which the Contract Times will commence to run and on which Contractor shall start to perform the Work under the Contract Documents.

29. *Owner*--The individual or entity with whom Contractor has entered into the Agreement and for whom the Work is to be performed. As a general matter, the Contractor should utilize the Engineer's designated representative as the liaison between the Contractor and the Owner. However, in an exceptional circumstance, the Contractor can notify Owner's designated representative.

30. *PCBs*--Polychlorinated biphenyls.

31. *Petroleum*--Petroleum, including crude oil or any fraction thereof which is liquid at standard conditions of temperature and pressure (60 degrees Fahrenheit and 14.7 pounds per square inch absolute), such as oil, petroleum, fuel oil, oil sludge, oil refuse, gasoline, kerosene, and oil mixed with other non-Hazardous Waste and crude oils.

32. *Progress Schedule*--A schedule, prepared and maintained by Contractor, describing the sequence and duration of the activities comprising the Contractor's plan to accomplish the Work within the Contract Times.

Copyright © 2002 National Society of Professional Engineers for EJCDC. All rights reserved.

33. *Project*--The total construction of which the Work to be performed under the Contract Documents may be the whole, or a part.

34. *Project Manual*--The bound documentary information prepared for bidding and constructing the Work. A listing of the contents of the Project Manual, which may be bound in one or more volumes, is contained in the table(s) of contents.

35. *Radioactive Material*--Source, special nuclear, or byproduct material as defined by the Atomic Energy Act of 1954 (42 USC Section 2011 et seq.) as amended from time to time.

36. *Related Entity* -- An officer, director, partner, employee, agent, consultant, or subcontractor.

37. *Resident Project Representative*--The authorized representative of Engineer who may be assigned to the Site or any part thereof.

38. *Samples*--Physical examples of materials, equipment, or workmanship that are representative of some portion of the Work and which establish the standards by which such portion of the Work will be judged.

39. *Schedule of Submittals*--A schedule, prepared and maintained by Contractor, of required submittals and the time requirements to support scheduled performance of related construction activities.

40. *Schedule of Values*--A schedule, prepared and maintained by Contractor, allocating portions of the Contract Price to various portions of the Work and used as the basis for reviewing Contractor's Applications for Payment.

41. *Shop Drawings*--All drawings, diagrams, illustrations, schedules, and other data or information which are specifically prepared or assembled by or for Contractor and submitted by Contractor to illustrate some portion of the Work.

42. *Site*--Lands or areas indicated in the Contract Documents as being furnished by Owner upon which the Work is to be performed, including rights-of-way and easements for access thereto, and such other lands furnished by Owner which are designated for the use of Contractor.

43. *Specifications*--That part of the Contract Documents consisting of written requirements for materials, equipment, systems, standards and workmanship as applied to the Work, and certain administrative requirements and procedural matters applicable thereto.

44. *Subcontractor*--An individual or entity having a direct contract with Contractor or with any other Subcontractor for the performance of a part of the Work at the Site.

45. *Substantial Completion*--The time at which the Work (or a specified part thereof) has progressed to the point where, in the opinion of Owner, the Work (or a specified part thereof) is sufficiently complete, in accordance with the Contract Documents, so that the Work (or a specified part thereof) can be utilized for the purposes for which it is intended. The terms "substantially complete" and "substantially completed" as applied to all or part of the Work refer to Substantial Completion thereof.

46. *Successful Bidder*--The Bidder submitting a responsive Bid to whom Owner makes an award.

47. *Supplementary Conditions*--That part of the Contract Documents which amends or supplements these General Conditions.

48. *Supplier*--A manufacturer, fabricator, supplier, distributor, materialman, or vendor having a direct contract with Contractor or with any Subcontractor to furnish materials or equipment to be incorporated in the Work by Contractor or any Subcontractor.

49. *Underground Facilities*--All underground pipelines, conduits, ducts, cables, wires, manholes, vaults, tanks, tunnels, or other such facilities or attachments, and any encasements containing such facilities, including those that convey electricity, gases, steam, liquid petroleum products, telephone or other communications, cable television, water, wastewater, storm water, other liquids or chemicals, or traffic or other control systems.

50. *Unit Price Work*--Work to be paid for on the basis of unit prices.

51. *Work*--The entire construction or the various separately identifiable parts thereof required to be provided under the Contract Documents. Work includes and is the result of performing or providing all labor, services, and documentation necessary to produce such construction, and furnishing, installing, and incorporating all materials and equipment into such construction, all as required by the Contract Documents.

Copyright © 2002 National Society of Professional Engineers for EJCDC. All rights reserved.

52. *Work Change Directive*--A written statement to Contractor issued on or after the Effective Date of the Agreement and signed by Owner and recommended by Engineer ordering an addition, deletion, or revision in the Work, or responding to differing or unforeseen subsurface or physical conditions under which the Work is to be performed or to emergencies. A Work Change Directive will not change the Contract Price or the Contract Times but is evidence that the parties expect that the change ordered or documented by a Work Change Directive will be incorporated in a subsequently issued Change Order following negotiations by the parties as to its effect, if any, on the Contract Price or Contract Times.

1.02 *Terminology*

A. The following words or terms are not defined but, when used in the Bidding Requirements or Contract Documents, have the following meaning.

B. *Intent of Certain Terms or Adjectives*

1. The Contract Documents include the terms "as allowed," "as approved," "as ordered", "as directed" or terms of like effect or import to authorize an exercise of professional judgment by Engineer. In addition, the adjectives "reasonable," "suitable," "acceptable," "proper," "satisfactory," or adjectives of like effect or import are used to describe an action or determination of Engineer as to the Work. It is intended that such exercise of professional judgment, action or determination will be solely to evaluate, in general, the Work for compliance with the requirements of and information in the Contract Documents and conformance with the design concept of the completed Project as a functioning whole as shown or indicated in the Contract Documents (unless there is a specific statement indicating otherwise). The use of any such term or adjective is not intended to and shall not be effective to assign to Engineer any duty or authority to supervise or direct the performance of the Work or any duty or authority to undertake responsibility contrary to the provisions of Paragraph 9.09 or any other provision of the Contract Documents.

C. *Day*

1. The word "day" means a calendar day of 24 hours measured from midnight to the next midnight.

D. *Defective*

1. The word "defective," when modifying the word "Work," refers to Work that is unsatisfactory, faulty, or deficient in that it:

a. does not conform to the Contract Documents, or

b. does not meet the requirements of any applicable inspection, reference standard, test, or approval referred to in the Contract Documents, or

c. has been damaged prior to Engineer's - recommendation of final payment (unless responsibility for the protection thereof has been assumed by Owner at Substantial Completion in accordance with Paragraph 14.04 or 14.05).

E. *Furnish, Install, Perform, Provide*

1. The word "furnish," when used in connection with services, materials, or equipment, shall mean to supply and deliver said services, materials, or equipment to the Site (or some other specified location) ready for use or installation and in usable or operable condition.

2. The word "install," when used in connection with services, materials, or equipment, shall mean to put into use or place in final position said services, materials, or equipment complete and ready for intended use.

3. The words "perform" or "provide," when used in connection with services, materials, or equipment, shall mean to furnish and install said services, materials, or equipment complete and ready for intended use.

4. When "furnish," "install," "perform," or "provide" is not used in connection with services, materials, or equipment in a context clearly requiring an obligation of Contractor, "provide" is implied.

F. Unless stated otherwise in the Contract Documents, words or phrases which have a well-known technical or construction industry or trade meaning are used in the Contract Documents in accordance with such recognized meaning.

ARTICLE 2 - PRELIMINARY MATTERS

2.01 *Delivery of Bonds and Evidence of Insurance*

A. When Contractor delivers the executed counterparts of the Agreement to Owner, Contractor shall also deliver to Owner such bonds as Contractor may be required to furnish.

B. *Evidence of Insurance:* Before any Work at the Site is started, Contractor shall each deliver to Owner, with copies to each additional insured identified in the Supplementary Conditions, certificates of insurance (and other evidence of insurance which Owner or any additional insured may reasonably request) which Contractor is required to purchase and maintain in accordance with Article 5.

2.02 *Copies of Documents*

A. Owner shall furnish to Contractor up to four (4) printed or hard copies of the Drawings and Project

Copyright © 2002 National Society of Professional Engineers for EJCDC. All rights reserved.

Manual. Additional copies will be furnished upon request at the cost of reproduction.

2.03 *Commencement of Contract Times; Notice to Proceed*

A. TIME IS OF THE ESSENCE OF THIS CONTRACT. This is a Calendar Day Contract. The Contract Times will commence to run on the day indicated in the Notice to Proceed. The Owner will provide a Notice to Proceed at a reasonable time after the effective date of the Agreement. In no event will the Owner have any obligations or duties to the Contractor under the Agreement until the Notice to Proceed is given to the Contractor.

2.04 *Starting the Work*

A. Contractor shall start to perform the Work on the date when the Contract Times commence to run as set forth in the Notice to Proceed. No Work shall be done at the Site prior to the date on which the Contract Times commence to run.

2.05 *Before Starting Construction*

A. *Preliminary Schedules:* Within 10 days after the Effective Date of the Agreement (unless otherwise specified in the General Requirements), Contractor shall submit to Owner and Engineer for timely review**:**

1. a preliminary Progress Schedule; indicating the times (numbers of days or dates) for starting and completing the various stages of the Work, including any Milestones specified in the Contract Documents;

2. a preliminary Schedule of Submittals; and

3. a preliminary Schedule of Values for all of the Work which includes quantities and prices of items which when added together equal the Contract Price and subdivides the Work into component parts in sufficient detail to serve as the basis for progress payments during performance of the Work. Such prices will include an appropriate amount of overhead and profit applicable to each item of Work.

2.06 *Preconstruction Conference*

A. Before any Work at the Site is started, a conference attended by Owner, Contractor, Engineer, and others as appropriate will be held to establish a working understanding among the parties as to the Work and to discuss the schedules referred to in Paragraph 2.05.A, procedures for handling Shop Drawings and other submittals, processing Applications for Payment, and maintaining required records.

2.07 *Initial Acceptance of Schedules*

A. At least 10 days before submission of the first Application for Payment a conference attended by Contractor, Engineer, and others as appropriate will be held to review for acceptability to Engineer as provided below the schedules submitted in accordance with Paragraph 2.05.A. Contractor shall have an additional 10 days to make corrections and adjustments and to complete and resubmit the schedules. No progress payment shall be made to Contractor until acceptable schedules are submitted to Engineer.

1. The Progress Schedule shall not exceed time limits current under the Contract Documents, shall be revised at appropriate intervals as required by the conditions of the Work and Project, shall be related to the entire Project to the extent required by the Contract Documents, and shall provide for expeditious, economical, and practicable execution of the Work. The Contractor shall perform all Work in accordance with the most recent Progress Schedule submitted to the Owner and Engineer. Nothing contained herein will impose on Owner or Engineer responsibility for the Progress Schedule, for sequencing, scheduling, or progress of the Work nor interfere with or relieve Contractor from Contractor's full responsibility therefor.

a. The Progress Schedule shall be in a detailed precedence-style critical path method ("CPM") or primavera-type format satisfactory to the Owner. The Progress Schedule shall also (i) provide a graphic representation of all activities and events that will occur during performance of the Work; (ii) identify each phase of construction and occupancy; and (iii) set forth dates that are critical in ensuring the timely and orderly completion of the Work in accordance with the requirements of the Contract Documents (hereinafter referred to as "Milestone Dates"). Upon review and acceptance by the Owner of the Milestone Dates, the Progress Schedule shall be deemed part of the Contract Documents. If not accepted, the Progress Schedule shall be promptly revised by Contractor in accordance with the recommendations of the Owner and resubmitted for acceptance. The Contractor shall monitor the progress of the Work for conformance with the requirements of the Progress Schedule and shall promptly advise the Owner of any delays or potential delays. The accepted Progress Schedule shall be updated to reflect the actual conditions as set forth in Paragraph 2.6.1 or if requested by either the Owner or the Engineer.

b. The parties acknowledge and agree that notwithstanding any theoretical delays or theoretical extensions of time for completion as may be shown on the Progress Schedule, the Interim Completion Dates, Milestone Dates, and the Scheduled Completion Date shall be governed by the Contract and shall be extended only in accordance with the procedures set forth in the Contract Documents.

Copyright © 2002 National Society of Professional Engineers for EJCDC. All rights reserved.

c. In the event that the Owner or Engineer determines that the Work has not progressed or reached the level of completion required by the Contract Documents, the Owner shall have the right to order the Contractor to take corrective measures necessary to expedite the progress of construction, including, without limitation, (i) working additional shifts or overtime, (ii) supplying additional manpower, equipment, and facilities, and (iii) other similar measures. Contractor agrees to take such corrective measures to expedite the progress of construction until the progress of the Work complies with the state of completion required by the Contract Documents.

d. In the event Owner or Engineer determines that Contractor is not timely performing any of its Work or that Contractor is not keeping up with the Progress Schedule, Owner may, in addition to Owner's rights stated herein, request Contractor to prepare a Recovery Schedule. In such event, Contractor will prepare a Recovery Schedule in such form and in such detail as Owner may request. Contractor further agrees that it will work as necessary to meet the requirements of the Recovery Schedule and bring its Work into compliance with the current Progress Schedule (all without any additional cost to Owner). No approval by Owner or Engineer of Contractor's Recovery Schedule pursuant to this Paragraph shall constitute a waiver by Owner of any damages or losses which Owner may suffer as a result of Contractor's failure to meet the Scheduled Completion Date.

2. Contractor's Schedule of Submittals will be acceptable to Owner and Engineer if it provides a workable arrangement for reviewing and processing the required submittals.

3. Contractor's Schedule of Values will be acceptable to Owner and Engineer as to form and substance if it provides a reasonable allocation of the Contract Price to component parts of the Work.

4. If required by Owner, Contractor shall also prepare and furnish project cash flow projections, manning charts for all key trades, and schedules for the purchase and delivery of all equipment and materials, together with the periodic updating thereof.

ARTICLE 3 - CONTRACT DOCUMENTS: INTENT, AMENDING, REUSE

3.01 *Intent*

A. The Contract Documents are complementary; what is required by one is as binding as if required by all.

B. It is the intent of the Contract Documents to describe a functionally complete Project (or part thereof) to be constructed in accordance with the Contract Documents. Any labor, documentation, services, materials, or equipment that may reasonably be inferred from the Contract Documents or from prevailing custom or trade usage as being required to produce the intended result will be provided whether or not specifically called for at no additional cost to Owner.

C. Clarifications and interpretations of the Contract Documents shall be issued by Engineer as provided in Article 9.

D. In the event of inconsistencies within or between the parts of the Contract Documents, or between the Contract Documents and applicable standards, codes, or ordinances, the Contractor shall (i) provide the better quality or greater quantity of Work or (ii) comply with the more stringent requirement; either or both in accordance with the Engineer's interpretation.

3.02 *Reference Standards*

A. Standards, Specifications, Codes, Laws, and Regulations

1. Reference to standards, specifications, manuals, or codes of any technical society, organization, or association, or to Laws or Regulations, whether such reference be specific or by implication, shall mean the standard, specification, manual, code, or Laws or Regulations in effect at the time of opening of Bids (or on the Effective Date of the Agreement if there were no Bids), except as may be otherwise specifically stated in the Contract Documents.

2. No provision of any such standard, specification, manual or code, or any instruction of a Supplier shall be effective to change the duties or responsibilities of Owner, Contractor, or Engineer, or any of their subcontractors, consultants, agents, or employees from those set forth in the Contract Documents. No such provision or instruction shall be effective to assign to Owner, or Engineer, or any of, their Related Entities, any duty or authority to supervise or direct the performance of the Work or any duty or authority to undertake responsibility inconsistent with the provisions of the Contract Documents.

3.03 *Reporting and Resolving Discrepancies*

A. Reporting Discrepancies

1. *Contractor's Review of Contract Documents Before Starting Work*: Before undertaking each part of the Work, Contractor shall carefully study and compare the Contract Documents and check and verify pertinent figures therein and all applicable field measurements. Contractor shall promptly report in writing to Owner and Engineer any conflict, error, ambiguity, or discrepancy which Contractor may discover in the Contract Documents, or any condition at the site affecting the Work, and shall obtain a written interpretation or clarification from Owner and Engineer before proceeding

Copyright © 2002 National Society of Professional Engineers for EJCDC. All rights reserved.

with any Work affected thereby. The Contractor shall be liable to the Owner for failure to report any conflict, error, ambiguity or discrepancy in the Contract Documents which the Contractor knew or reasonably should have known.

2. *Contractor's Review of Contract Documents During Performance of Work*: If, during the performance of the Work, Contractor discovers any conflict, error, ambiguity, or discrepancy within the Contract Documents or between the Contract Documents and any provision of any Law or Regulation applicable to the performance of the Work or of any standard, specification, manual or code, or of any instruction of any Supplier, Contractor shall promptly report it to Owner and Engineer in writing. Contractor shall not proceed with the Work affected thereby (except in an emergency as required by Paragraph 6.16.A) until an amendment or supplement to the Contract Documents has been issued by one of the methods indicated in Paragraph 3.04.

3. Contractor shall not be liable to Owner or Engineer for failure to report any conflict, error, ambiguity, or discrepancy in the Contract Documents unless Contractor knew or reasonably should have known thereof.

4. The terms "knowledge," "recognize," and "discover," their respective derivatives, and similar terms in the Contract Documents, as used in reference to the Contractor, shall be interpreted to mean that which the Contractor knows (or should know), recognizes (or should recognize), and discovers (or should discover) in exercising the care, skill, and diligence required by the Contract Documents. Analogously, the expression "reasonably inferable" and similar terms in the Contract Documents shall be interpreted to mean reasonably inferable by a contractor familiar with the Project and exercising the care, skill, and diligence required of the Contractor by the Contract Documents.

B. Resolving Discrepancies

1. Except as may be otherwise specifically stated in the Contract Documents, the provisions of the Contract Documents shall take precedence in resolving any conflict, error, ambiguity, or discrepancy between the provisions of the Contract Documents and:

a. the provisions of any standard, specification, manual, code, or instruction (whether or not specifically incorporated by reference in the Contract Documents); or

b. the provisions of any Laws or Regulations applicable to the performance of the Work (unless such an interpretation of the provisions of the Contract Documents would result in violation of such Law or Regulation).

3.04 *Amending and Supplementing Contract Documents*

A. The Contract Documents may be amended to provide for additions, deletions, and revisions in the Work or to modify the terms and conditions thereof by either a Change Order or a Work Change Directive.

B. The requirements of the Contract Documents may be supplemented, and minor variations and deviations in the Work can only be authorized, by one or more of the following ways:

1. A Field Order;

2. Engineer's approval of a Shop Drawing or Sample; (Subject to the provisions of Paragraph 6.17.D.3); or

3. Engineer's written interpretation or clarification.

Any variations and deviations in the Work arising from any of the methods set forth in Paragraph 3.04.B will not authorize any Amendments to the Contract Price or Contract Times. The sole method to amend the Contract Price or Contract Times is pursuant to Paragraph 3.04.A.

3.05 *Reuse of Documents*

A. Contractor and any Subcontractor or Supplier or other individual or entity performing or furnishing all of the Work under a direct or indirect contract with Contractor, shall not:

1. have or acquire any title to or ownership rights in any of the Drawings, Specifications, or other documents (or copies of any thereof) prepared by or bearing the seal of Engineer or Engineer's consultants, including electronic media editions; or

2. reuse any of such Drawings, Specifications, other documents, or copies thereof on extensions of the Project or any other project without written consent of Owner and Engineer and specific written verification or adaption by Engineer.

B. The prohibition of this Paragraph 3.05 will survive final payment, or termination of the Contract. Nothing herein shall preclude Contractor from retaining copies of the Contract Documents for record purposes.

3.06 *Electronic Data*

A. Copies of data furnished by Owner or Engineer to Contractor or Contractor to Owner or Engineer that may be relied upon are limited to the printed copies (also known as hard copies). Files in electronic media format of text, data, graphics, or other types are furnished only for the convenience of the receiving party. Any conclusion or information obtained or derived from such electronic files will be at the user's sole risk. If there is a discrepancy between the electronic files and the hard copies, the hard copies govern.

Copyright © 2002 National Society of Professional Engineers for EJCDC. All rights reserved.

B. Because data stored in electronic media format can deteriorate or be modified inadvertently or otherwise without authorization of the data's creator, the party receiving electronic files agrees that it will perform acceptance tests or procedures within 60 days, after which the receiving party shall be deemed to have accepted the data thus transferred. Any errors detected within the 60-day acceptance period will be corrected by the transferring party.

C. When transferring documents in electronic media format, the transferring party makes no representations as to long term compatibility, usability, or readability of documents resulting from the use of software application packages, operating systems, or computer hardware differing from those used by the data's creator.

ARTICLE 4 - AVAILABILITY OF LANDS; SUBSURFACE AND PHYSICAL CONDITIONS; HAZARDOUS ENVIRONMENTAL CONDITIONS; REFERENCE POINTS

4.01 *Availability of Lands*

A. Owner shall furnish the Site. Owner shall notify Contractor of any encumbrances or restrictions not of general application but specifically related to use of the Site with which Contractor must comply in performing the Work. Owner will obtain in a timely manner and pay for easements for permanent structures or permanent changes in existing facilities. If Contractor and Owner are unable to agree on entitlement to or on the amount or extent, if any, of any adjustment in the Contract Price or Contract Times, or both, as a result of any delay in Owner's furnishing the Site or a part thereof, Contractor may make a Claim therefor as provided in Paragraph 10.05.

B. Upon reasonable written request, Owner shall furnish Contractor with a current statement of record legal title and legal description of the lands upon which the Work is to be performed and Owner's interest therein as necessary for giving notice of or filing a mechanic's or construction lien against such lands in accordance with applicable Laws and Regulations.

C. Contractor shall provide for all additional lands and access thereto that may be required for temporary construction facilities or storage of materials and equipment.

4.02 *Subsurface and Physical Conditions*

A. *Reports and Drawings:* The Supplementary Conditions identify:

1. those reports of explorations and tests of subsurface conditions at or contiguous to the Site that Engineer has used in preparing the Contract Documents; and

2. those drawings of physical conditions in or relating to existing surface or subsurface structures at or contiguous to the Site (except Underground Facilities) that Engineer has used in preparing the Contract Documents.

B. *Limited Reliance by Contractor on Technical Data Authorized:* Contractor may rely upon the general accuracy of the "technical data" contained in such reports and drawings, but such reports and drawings are not Contract Documents. Such "technical data" is identified in the Supplementary Conditions. Except for such reliance on such "technical data," Contractor may not rely upon or make any claim against Owner or Engineer, or any of their Related Entities with respect to:

1. the completeness of such reports and drawings for Contractor's purposes, including, but not limited to, any aspects of the means, methods, techniques, sequences, and procedures of construction to be employed by Contractor, and safety precautions and programs incident thereto; or

2. other data, interpretations, opinions, and information contained in such reports or shown or indicated in such drawings; or

3. any Contractor interpretation of or conclusion drawn from any "technical data" or any such other data, interpretations, opinions, or information.

4.03 *Differing Subsurface or Physical Conditions*

A. The Contractor hereby covenants that it has examined the site of the proposed Work and is familiar with all of the conditions surrounding construction of the Project, having conducted all inquiries, tests and investigations for the Work.

1. The Contractor acknowledges that he has satisfied himself as to the nature and location of the Work; the general and local conditions, particularly those bearing upon availability of transportation, disposal, handling and storage of materials, availability of labor, water, electric power, roads, and uncertainties of weather, river/stream stages, or similar physical conditions at the site; the conformation and conditions of the ground; the character of equipment and facilities needed preliminary to and during the prosecution of the Work and all other matters which can in any way affect the work or the cost thereof under this Contract.

2. The Contractor further acknowledges that he has satisfied himself as to the character, quality, and quantity of surface and subsurface materials to be

Copyright © 2002 National Society of Professional Engineers for EJCDC. All rights reserved.

encountered from inspecting the Site and from evaluating information derived from exploratory work, if any, that has been presented in any geotechnical report, as well as from information presented in the Supplementary Conditions. Any failure by the Contractor to acquaint himself with all the available information will not relieve him from responsibility for properly estimating the difficulty or cost of successfully performing the Work. Neither the Owner nor the Engineer assume responsibility for any conclusion or interpretation made by the Contractor on the basis of the information made available by the Owner or the Engineer. All risks of differing site conditions shall be borne solely by the Contractor.

4.04 *Underground Facilities*

A. *Shown or Indicated:* The information and data shown or indicated in the Contract Documents with respect to existing Underground Facilities at or contiguous to the Site is based on information and data furnished to Owner or Engineer by the owners of such Underground Facilities, including Owner, or by others. Unless it is otherwise expressly provided in the Supplementary Conditions:

1. Owner and Engineer shall not be responsible for the accuracy or completeness of any such information or data; and

2. the cost of all of the following will be included in the Contract Price, and Contractor shall have full responsibility for:

a. reviewing and checking all such information and data,

b. locating all Underground Facilities shown or indicated in the Contract Documents and notifying Texas One Call Service,

c. coordination of the Work with the owners of such Underground Facilities, including Owner, during construction, and

d. the safety and protection of all such Underground Facilities and repairing any damage thereto resulting from the Work.

3. Notwithstanding any other provision to the contrary, the Contractor shall be solely responsible for the location and protection of any and all public lines and utility customer service lines in the Work area. For the purposes of this section, "public lines" means the utility distribution and supply system within public rights-of-way or easements, and "utility customer service lines" (service) means any utility line connecting a utility customer to the utility distribution system. Generally, existing service connections within right-of-way or easements are not shown on the Drawings. The Contractor shall notify the Owner and "Texas One Call Service" and exercise due care to locate and to mark, uncover or otherwise protect all such lines in the construction zone and any of the Contractor's work or storage areas. The Contractor's obligation hereunder shall be primary and non-delegable. **The Contractor shall indemnify or reimburse such expenses or costs (including fines that may be levied against the Owner) that may result from unauthorized or accidental damage to all public lines and utility customer service lines in the Work area.** The Owner reserves the right to repair such damage the Contractor may cause, at the Contractor's expense.

B. *Not Shown or Indicated*

1. If an Underground Facility is uncovered or revealed at or contiguous to the Site which was not shown or indicated, or not shown or indicated with reasonable accuracy in the Contract Documents, Contractor shall, within 24 hours after the Contractor discovers and before further disturbing conditions affected thereby or performing any Work in connection therewith (except in an emergency as required by Paragraph 6.16.A), identify the owner of such Underground Facility and give written notice to that owner and to Owner and Engineer.

C. The Contractor shall take reasonable precaution to avoid disturbing primitive records and antiquities of archaeological, paleontological or historical significance. No objects of this nature shall be disturbed without written permission of the Owner and the Texas Department of Antiquities Protection. When such objects are uncovered unexpectedly, the Contractor shall stop all Work in close proximity and notify Owner's Representative and the Texas Department of Antiquities Protection of their presence and shall not disturb them until written permission and permit to do so is granted. All primitive rights and antiquities uncovered on the Owner's property shall remain property of the State of Texas, the Texas Department of Antiquities Protection conforming to the Texas Natural Resources Code. If it is determined by the Owner, in consultation with the Texas Department of Antiquities Protection, that exploration or excavation of primitive records or antiquities on Project site is necessary to avoid loss, the Contractor shall cooperate in salvage work attendant to preservation. If the Work stoppage or salvage work causes an increase in the Contractor's cost of, or time required for, performance of the Work, the Contract Amount and/or Contract Time may be equitably adjusted.

4.05 *Reference Points*

A. Engineer shall provide engineering surveys to establish reference points for construction which in Engineer's judgment are necessary to enable Contractor to proceed with the Work. Contractor shall be responsible for laying out the Work, shall protect and preserve the established reference points and property monuments, and shall make no changes or relocations without the prior

Copyright © 2002 National Society of Professional Engineers for EJCDC. All rights reserved.

written approval of Owner. Contractor shall report to Engineer whenever any reference point or property monument is lost or destroyed or requires relocation because of necessary changes in grades or locations, and shall be responsible for the accurate replacement or relocation of such reference points or property monuments by a Registered Professional Land Surveyor at Contractor's expense.

4.06 *Hazardous Environmental Condition at Site*

A. *Reports and Drawings:* Reference is made to the Supplementary Conditions for the identification of those reports and drawings relating to a Hazardous Environmental Condition identified at the Site, if any, that have been utilized by the Engineer in the preparation of the Contract Documents.

B. *Limited Reliance by Contractor on Technical Data Authorized:* Contractor may rely upon the general accuracy of the "technical data" contained in such reports and drawings, but such reports and drawings are not Contract Documents. Such "technical data" is identified in the Supplementary Conditions. Except for such reliance on such "technical data," Contractor may not rely upon or make any claim against Owner or Engineer, or any of their Related Entities with respect to:

1. the completeness of such reports and drawings for Contractor's purposes, including, but not limited to, any aspects of the means, methods, techniques, sequences and procedures of construction to be employed by Contractor and safety precautions and programs incident thereto; or

2. other data, interpretations, opinions and information contained in such reports or shown or indicated in such drawings; or

3. any Contractor interpretation of or conclusion drawn from any "technical data" or any such other data, interpretations, opinions or information.

C. The Contractor must take all precautions to discovery and locate any Hazardous Environmental Condition(s) at the site that may present a substantial danger to persons or property exposed thereto in connection with the Work at the site. The Contractor is responsible for any damages caused by such Hazardous Environmental Condition(s) created on the site by a Contractor, Subcontractor, Supplier, or anyone else for whom the Contractor is responsible. Within 24 hours of the time when the Contractor discovers the Hazardous Environmental Condition(s), the Contractor will follow the procedures set forth in Paragraph 4.06.D.

D. If Contractor encounters a Hazardous Environmental Condition or if Contractor or anyone for whom Contractor is responsible creates a Hazardous Environmental Condition, Contractor shall immediately: (i) secure or otherwise isolate such condition; (ii) stop all Work in connection with such condition and in any area affected thereby (except in an emergency as required by Paragraph 6.16.A); and (iii) notify Owner and Engineer (and promptly thereafter confirm such notice in writing). Owner shall promptly consult with Engineer concerning the necessity for Owner to retain a qualified expert to evaluate such condition or take corrective action, if any.

E. Contractor shall not be required to resume Work in connection with such condition or in any affected area until after Owner has obtained any required permits related thereto and delivered to Contractor written notice: (i) specifying that such condition and any affected area is or has been rendered safe for the resumption of Work; or (ii) specifying any special conditions under which such Work may be resumed safely. If Owner and Contractor cannot agree as to entitlement to or on the amount or extent, if any, of any adjustment in Contract Price or Contract Times, or both, as a result of such Work stoppage or such special conditions under which Work is agreed to be resumed by Contractor, either party may make a Claim therefor as provided in Paragraph 10.05.

F. If after receipt of such written notice Contractor does not agree to resume such Work based on a reasonable belief it is unsafe, or does not agree to resume such Work under such special conditions, then Owner may order the portion of the Work that is in the area affected by such condition to be deleted from the Work. If Owner and Contractor cannot agree as to entitlement to or on the amount or extent, if any, of an adjustment in Contract Price or Contract Times as a result of deleting such portion of the Work, then either party may make a Claim therefor as provided in Paragraph 10.05. Owner may have such deleted portion of the Work performed by Owner's own forces or others in accordance with Article 7.

H. To the fullest extent permitted by Laws and Regulations, Contractor shall indemnify and hold harmless Owner and Engineer, and the officers, directors, partners, employees, agents, consultants, and subcontractors of each and any of them from and against all claims, costs, losses, and damages (including but not limited to all fees and charges of engineers, architects, attorneys, and other professionals and all court or arbitration or other dispute resolution costs) arising out of or relating to a Hazardous Environmental Condition created by Contractor or by anyone for whom Contractor is responsible. Nothing in this Paragraph 4.06.H shall obligate Contractor to indemnify any individual or entity from and against the consequences of that individual's or entity's own negligence.

I. The provisions of Paragraphs 4.02, 4.03, and 4.04 do not apply to a Hazardous Environmental Condition uncovered or revealed at the Site.

Copyright © 2002 National Society of Professional Engineers for EJCDC. All rights reserved.

ARTICLE 5 - BONDS AND INSURANCE

5.01 *Performance, Payment, and Other Bonds*

A. Contractor shall furnish performance and payment bonds, each in an amount at least equal to the Contract Price as security for the faithful performance and payment of all of Contractor's obligations under the Contract Documents. These bonds shall remain in effect until one year after the date when final payment becomes due or until completion of the correction period specified in Paragraph 13.07, whichever is later, except as provided otherwise by Laws or Regulations or by the Contract Documents. Contractor shall also furnish such other bonds as are required by the Contract Documents.

B. All bonds shall be in the form prescribed by the Contract Documents except as provided otherwise by Laws or Regulations, and shall be executed by such sureties as are named in the current list of "Companies Holding Certificates of Authority as Acceptable Sureties on Federal Bonds and as Acceptable Reinsuring Companies" as published in Circular 570 (amended) by the Financial Management Service, Surety Bond Branch, U.S. Department of the Treasury. All bonds signed by an agent must be accompanied by a certified copy of the agent's authority to act.

C. If the surety on any bond furnished by Contractor is declared bankrupt or becomes insolvent or its right to do business is terminated in any state where any part of the Project is located or it ceases to meet the requirements of Paragraph 5.01.B, Contractor shall promptly notify Owner and Engineer and shall, within 20 days after the event giving rise to such notification, provide another bond and surety, both of which shall comply with the requirements of Paragraphs 5.01.B and 5.02.

5.02 *Licensed Sureties and Insurers*

A. All bonds and insurance required by the Contract Documents shall be obtained from solvent surety or insurance companies that are duly licensed by the State of Texas and authorized to issue bonds or insurance policies for the limits and coverages required by the Contract Documents. The bonds shall be in a form acceptable to the Owner and shall be issued by a surety which complies with the requirements of Art. 7.19-1, Texas Insurance Code and which is otherwise acceptable to the Owner. Owner may require the surety to obtain reinsurance for any portion of the risk that exceeds 10% of the surety's capital and surplus. For bonds exceeding $100,000, the surety must also hold a certificate of authority from the U.S. Secretary of the Treasury or have obtained reinsurance from a reinsurer that is authorized as a reinsurer in Texas and holds a certificate of authority from the U.S. Secretary of the Treasury.
Such surety and insurance companies shall also meet such additional requirements and qualifications as may be provided in the Supplementary Conditions.

5.03 *Certificates of Insurance*

A. Contractor shall deliver to Owner, with copies to each additional insured identified in the Supplementary Conditions, certificates of insurance (and other evidence of insurance requested by Owner or any other additional insured) which Contractor is required to purchase and maintain.

B. Owner shall deliver to Contractor, with copies to each additional insured identified in the Supplementary Conditions, certificates of insurance (and other evidence of insurance requested by Contractor or any other additional insured) which Owner is required to purchase and maintain.

5.04 *Contractor's Liability Insurance*

A. Contractor shall purchase and maintain such liability and other insurance as is appropriate for the Work being performed and as will provide protection from claims set forth below which may arise out of or result from Contractor's performance of the Work and Contractor's other obligations under the Contract Documents, whether it is to be performed by Contractor, any Subcontractor or Supplier, or by anyone directly or indirectly employed by any of them to perform any of the Work, or by anyone for whose acts any of them may be liable:

1. claims under workers' compensation, disability benefits, and other similar employee benefit acts;

2. claims for damages because of bodily injury, occupational sickness or disease, or death of Contractor's employees;

Copyright © 2002 National Society of Professional Engineers for EJCDC. All rights reserved.

3. claims for damages because of bodily injury, sickness or disease, or death of any person other than Contractor's employees;

4. claims for damages insured by reasonably available personal injury liability coverage which are sustained:

a. by any person as a result of an offense directly or indirectly related to the employment of such person by Contractor, or

b. by any other person for any other reason;

5. claims for damages, other than to the Work itself, because of injury to or destruction of tangible property wherever located, including loss of use resulting therefrom; and

6. claims for damages because of bodily injury or death of any person or property damage arising out of the ownership, maintenance or use of any motor vehicle.

B. The policies of insurance required by this Paragraph 5.04 shall:

1. with respect to insurance required by Paragraphs 5.04.A.3 through 5.04.A.6 inclusive, include as additional insured (subject to any customary exclusion regarding professional liability) Owner and Engineer, and any other individuals or entities identified in the Supplementary Conditions, all of whom shall be listed as additional insureds, and include coverage for the respective officers, directors, partners, employees, agents, consultants and subcontractors of each and any of all such additional insureds, and the insurance afforded to these additional insureds shall provide primary coverage for all claims covered thereby;

2. include at least the specific coverages and be written for not less than the limits of liability provided in the Supplementary Conditions or required by Laws or Regulations, whichever is greater;

3. include completed operations insurance;

4. include contractual liability insurance covering Contractor's indemnity obligations under Paragraphs 6.11 and 6.20;

5. contain a provision or endorsement that the coverage afforded will not be canceled, materially changed or renewal refused until at least 30 days prior written notice has been given to Owner and Contractor and to each other additional insured identified in the Supplementary Conditions to whom a certificate of insurance has been issued (and the certificates of insurance furnished by the Contractor pursuant to Paragraph 5.03 will so provide);

6. remain in effect at least until final payment and at all times thereafter when Contractor may be correcting, removing, or replacing defective Work in accordance with Paragraph 13.07; and

7. with respect to completed operations insurance, and any insurance coverage written on a claims-made basis, remain in effect for at least two years after final payment.

a. Contractor shall furnish Owner and each other additional insured identified in the Supplementary Conditions, to whom a certificate of insurance has been issued, evidence satisfactory to Owner and any such additional insured of continuation of such insurance at final payment and one year thereafter.

5.05 *Workers' Compensation Insurance Coverage.*

A. Definitions:

Certificate of coverage ("certificate") - A copy of a certificate of insurance, a certificate of authority to self-insure issued by the commission, or a coverage agreement (TWCC-81, TWCC-82, TWCC-83, or TWCC-84), showing statutory workers' compensation insurance coverage for the person's or entity's employees providing services on a project, for the duration of the Project.

Duration of the Project - includes the time from the beginning of the work on the project until the contractor's/person's work on the project has been completed and accepted by the governmental entity.

Persons providing services on the project ("subcontractor" in §406.096) - includes all persons or entities performing all or part of the services the contractor has undertaken to perform on the project, regardless of whether that person contracted directly with the contractor and regardless of whether that person has employees. This includes, without limitation, independent contractors, subcontractors, leasing companies, motor carriers, owner-operators, employees of any such entity, or employees of any entity which furnishes persons to provide services on the project. "Services" include, without limitation, providing, hauling, or delivering equipment or materials, or providing labor, transportation, or other service related to a project. "Services" does not include activities unrelated to the project, such as food/beverage vendors, office supply deliveries, and delivery of portable toilets.

B. The Contractor shall provide coverage, based on proper reporting of classification codes and payroll amounts and filing of any coverage agreements, which meets the statutory requirements of Texas Labor Code, Section 401.011(44) for all employees of the Contractor providing services on the project, for the duration of the project.

Copyright © 2002 National Society of Professional Engineers for EJCDC. All rights reserved.

C. The Contractor must provide a certificate of coverage to the governmental entity prior to being awarded the Contract.

D. If the coverage period shown on the contractor's current certificate of coverage ends during the duration of the project, the contractor must, prior to the end of the coverage period, file a new certificate of coverage with the governmental entity showing that coverage has been extended.

E. The Contractor shall obtain from each person providing services on a project, and provide to the governmental entity:

(1) a certificate of coverage, prior to that person beginning work on the project, so the governmental entity will have on file certificates of coverage showing coverage for all persons providing services on the project; and

(2) no later than seven days after receipt by the contractor, a new certificate of coverage showing extension of coverage, if the coverage period shown on the current certificate of coverage ends during the duration of the project.

F. The Contractor shall retain all required certificates of coverage for the duration of the Project and for one year thereafter.

G. The Contractor shall notify the governmental entity in writing by certified mail or personal delivery, within 10 days after the Contractor knew or should have known, of any change that materially affects the provision of coverage of any person providing services on the project.

H. The Contractor shall post on each project site a notice, in the text, form and manner prescribed by the Texas Workers' Compensation Commission, informing all persons providing services on the project that they are required to be covered, and stating how a person may verify coverage and report lack of coverage. This notice does not satisfy other posting requirements imposed by the Act or other commission rules. This notice must be printed with a title in at least 30 point bold type and text in at least 19 point normal type, and shall be in both English and Spanish and any other language common to the worker population. The text for the notices shall be the following text provided by the commission on the sample notice, without any additional words or changes:

"REQUIRED WORKERS' COMPENSATION COVERAGE"

"The law requires that each person working on this site or providing services related to this construction project must be covered by workers' compensation insurance. This includes persons providing, hauling, or delivering equipment or materials, or providing labor or transportation or other service related to the project, regardless of the identity of their employer or status as an employee."

"Call the Texas Workers' Compensation Commission at 512-440-3789 to receive information on the legal requirement for coverage, to verify whether your employer has provided the required coverage, or to report an employer's failure to provide coverage."

I. The Contractor shall contractually require each person with whom it contracts to provide services on a project, to:

(1) provide coverage, based on proper reporting of classification codes and payroll amounts and filing of any coverage agreements, which meets the statutory requirements of Texas Labor Code, Section 401.011(44) for all of its employees providing services on the project, for the duration of the project;

(2) provide to the Contractor, prior to that person beginning work on the project, a certificate of coverage showing that coverage is being provided for all employees of the person providing services on the Project, for the duration of the Project;

(3) provide the Contractor, prior to the end of the coverage period, a new certificate of coverage showing extension of coverage, if the coverage period shown on the current certificate of coverage ends during the duration of the Project;

(4) obtain from each other person with whom it contracts, and provide to the Contractor:

(a) a certificate of coverage, prior to the other person beginning work on the Project; and

(b) a new certificate of coverage showing extension of coverage, prior to the end of the coverage period, if the coverage period shown on the current certificate of coverage ends during the duration of the Project;

(5) retain all required certificates of coverage on file for the duration of the Project and for one year thereafter;

(6) notify the governmental entity in writing by certified mail or personal delivery, within 10 days after the person knew or should have known, of any change that materially affects the provision of coverage of any person providing services on the Project; and

(7) contractually require each person with whom it contracts, to perform as required by Paragraphs (1) - (7), with the certificates of coverage to be provided to the person for whom they are providing services.

Copyright © 2002 National Society of Professional Engineers for EJCDC. All rights reserved.

J. By signing this Contract or providing or causing to be provided a certificate of coverage, the Contractor is representing to the Owner that all employees of the Contractor who will provide services on the Project will be covered by workers' compensation coverage for the duration of the Project, that the coverage will be based on proper reporting of classification codes and payroll amounts, and that all coverage agreements will be filed with the appropriate insurance carrier or, in the case of a self-insured, with the commission's Division of Self-Insurance Regulation. Providing false or misleading information may subject the Contractor to administrative penalties, criminal penalties, civil penalties, or other civil actions.

K. The Contractor's failure to comply with any of these provisions is a breach of contract by the Contractor which entitles the Owner to declare the Contract void if the Contractor does not remedy the breach within ten days after receipt of notice of breach from the Owner.

5.06 *Builder's Risk Insurance*

A. Unless otherwise provided in the Supplementary Conditions, Contractor shall purchase and maintain property insurance upon the Work at the Site in the amount of the full replacement cost thereof (subject to such deductible amounts as may be provided in the Supplementary Conditions or required by Laws and Regulations). This insurance shall:

1. include the interests of Owner, Contractor, Subcontractors, and Engineer, and any other individuals or entities identified in the Supplementary Conditions, and the officers, directors, partners, employees, agents, consultants and subcontractors of each and any of them, each of whom is deemed to have an insurable interest and shall be listed as an insured or additional insured;

2. be written on a Builder's Risk "all-risk" or open peril or special causes of loss policy form that shall at least include insurance for physical loss or damage to the Work, temporary buildings, false work, and materials and equipment in transit, and shall insure against at least the following perils or causes of loss: fire, lightning, extended coverage, theft, vandalism and malicious mischief, earthquake, collapse, debris removal, demolition occasioned by enforcement of Laws and Regulations, water damage, (other than caused by flood) and such other perils or causes of loss as may be specifically required by the Supplementary Conditions;

3. include expenses incurred in the repair or replacement of any insured property (including but not limited to fees and charges of engineers and architects);

4. cover materials and equipment stored at the Site or at another location that was agreed to in writing by Owner prior to being incorporated in the Work, provided that such materials and equipment have been included in an Application for Payment recommended by Engineer;

5. allow for partial utilization of the Work by Owner;

6. include testing and startup; and

7. be maintained in effect until final payment is made unless otherwise agreed to in writing by Owner, Contractor, and Engineer with 30 days written notice to each other additional insured to whom a certificate of insurance has been issued.

B. Contractor shall purchase and maintain such boiler and machinery insurance or additional property insurance as may be required by the Supplementary Conditions or Laws and Regulations which will include the interests of Owner, Contractor, Subcontractors, and Engineer, and any other individuals or entities identified in the Supplementary Conditions, and the officers, directors, partners, employees, agents, consultants and subcontractors of each and any of them, each of whom is deemed to have an insurable interest and shall be listed as an insured or additional insured.

C. All the policies of insurance (and the certificates or other evidence thereof) required to be purchased and maintained in accordance with Paragraph 5.06 will contain a provision or endorsement that the coverage afforded will not be canceled or materially changed or renewal refused until at least 30 days prior written notice has been given to Owner and Contractor and to each other additional insured to whom a certificate of insurance has been issued and will contain waiver provisions in accordance with Paragraph 5.07.

D. Owner shall not be responsible for purchasing and maintaining any property insurance specified in this Paragraph 5.06 to protect the interests of Contractor, Subcontractors, or others in the Work to the extent of any deductible amounts that are identified in the Supplementary Conditions. The risk of loss within such identified deductible amount will be borne by Contractor, Subcontractors, or others suffering any such loss, and if any of them wishes property insurance coverage within the limits of such amounts, each may purchase and maintain it at the purchaser's own expense.

5.07 *Waiver of Rights*

A. Owner and Contractor intend that all policies purchased in accordance with Paragraph 5.06 will protect Owner, Contractor, Subcontractors, and Engineer, and all other individuals or entities identified in the Supplementary Conditions to be listed as insureds or additional insureds (and the officers, directors, partners, employees, agents, consultants and subcontractors of each and any of them) in such policies and will provide primary coverage

Copyright © 2002 National Society of Professional Engineers for EJCDC. All rights reserved.

for all losses and damages caused by the perils or causes of loss covered thereby. All such policies shall contain provisions to the effect that in the event of payment of any loss or damage the insurers will have no rights of recovery against any of the insureds or additional insureds thereunder. Owner and Contractor waive all rights against each other and their respective officers, directors, partners, employees, agents, consultants and subcontractors of each and any of them for all losses and damages caused by, arising out of or resulting from any of the perils or causes of loss covered by such policies and any other property insurance applicable to the Work; and, in addition, waive all such rights against Subcontractors, and Engineer, and all other individuals or entities identified in the Supplementary Conditions to be listed as insured or additional insured (and the officers, directors, partners, employees, agents, consultants and subcontractors of each and any of them) under such policies for losses and damages so caused. None of the above waivers shall extend to the rights that any party making such waiver may have to the proceeds of insurance held by Owner as trustee or otherwise payable under any policy so issued.

B. Owner waives all rights against Contractor, Subcontractors, and Engineer, and the officers, directors, partners, employees, agents, consultants and subcontractors of each and any of them for:

2. loss or damage to the completed Project or part thereof caused by, arising out of, or resulting from fire or other insured peril or cause of loss covered by any property insurance maintained on the completed Project or part thereof by Owner during partial utilization pursuant to Paragraph 14.05, after Substantial Completion pursuant to Paragraph 14.04, or after final payment pursuant to Paragraph 14.07.

5.08 *Receipt and Application of Insurance Proceeds*

A. Any insured loss under the policies of insurance required by Paragraph 5.06 will be adjusted with Owner and made payable to Owner as fiduciary for the insureds, as their interests may appear, subject to the requirements of any applicable mortgage clause and of Paragraph 5.08.B. Owner shall deposit in a separate account any money so received and shall distribute it in accordance with such agreement as the parties in interest may reach. If no other special agreement is reached, the damaged Work shall be repaired or replaced, the moneys so received applied on account thereof, and the Work and the cost thereof covered by an appropriate Change Order .

B. Owner as fiduciary shall have power to adjust and settle any loss with the insurers unless one of the parties in interest shall object in writing within 15 days after the occurrence of loss to Owner's exercise of this power. If such objection be made, Owner as fiduciary shall make settlement with the insurers in accordance with such agreement as the parties in interest may reach. If no such agreement among the parties in interest is reached, Owner as fiduciary shall adjust and settle the loss with the insurers.

5.09 *Acceptance of Bonds and Insurance; Option to Replace*

A. If either Owner or Contractor has any objection to the coverage afforded by or other provisions of the bonds or insurance required to be purchased and maintained by the other party in accordance with Article 5 on the basis of non-conformance with the Contract Documents, the objecting party shall so notify the other party in writing within 10 days after receipt of the certificates (or other evidence requested) required by Paragraph 2.01.B. Owner and Contractor shall each provide to the other such additional information in respect of insurance provided as the other may reasonably request. If either party does not purchase or maintain all of the bonds and insurance required of such party by the Contract Documents, such party shall notify the other party in writing of such failure to purchase prior to the start of the Work, or of such failure to maintain prior to any change in the required coverage. Without prejudice to any other right or remedy, the other party may elect to obtain equivalent bonds or insurance to protect such other party's interests at the expense of the party who was required to provide such coverage, and a Change Order shall be issued to adjust the Contract Price accordingly.

5.10 *Partial Utilization, Acknowledgment of Property Insurer*

A. If Owner finds it necessary to occupy or use a portion or portions of the Work prior to Substantial Completion of all the Work as provided in Paragraph 14.05, no such use or occupancy shall commence before the insurers providing the property insurance pursuant to Paragraph 5.06 have acknowledged notice thereof and in writing effected any changes in coverage necessitated thereby. The insurers providing the property insurance shall consent by endorsement on the policy or policies, but the property insurance shall not be canceled or permitted to lapse on account of any such partial use or occupancy.

ARTICLE 6 - CONTRACTOR'S RESPONSIBILITIES

6.01 *Supervision and Superintendence*

A. Contractor shall supervise, inspect, and direct the Work competently and efficiently, devoting such attention thereto and applying such skills and expertise as may be necessary to perform the Work in accordance with the Contract Documents. Contractor shall be solely responsible for the means, methods, techniques, sequences, and procedures of construction. Contractor shall not be responsible for the negligence of Owner or Engineer in the design or specification of a specific means, method, technique, sequence, or procedure of

Copyright © 2002 National Society of Professional Engineers for EJCDC. All rights reserved.

construction which is shown or indicated in and expressly required by the Contract Documents.

B. The Contractor shall have an English-speaking, competent Superintendent on the Work at all times that Work is in progress. Upon request of Owner, the Contractor shall present the resume of the proposed Superintendent to Owner showing evidence of experience and successful superintendence and direction of work of a similar scale and complexity. If, in the opinion of Owner, the proposed Superintendent does not indicate sufficient experience in line with the Work, he/she will not be allowed to be the designated Superintendent for the Work. The Superintendent shall not be replaced without Written Notice to Owner. If the Contractor deems it necessary to replace the Superintendent, the Contractor shall provide the necessary information for approval, as stated above, on the proposed new Superintendent. A qualified substitute Superintendent may be designated in the event that the designated Superintendent is temporarily away from the Work, but not to exceed a time limit acceptable to Owner. The Contractor shall replace the Superintendent upon the Owner's request in the event the Superintendent is unable to perform to the Owner's satisfaction. The Superintendent will be the Contractor's representative on the Work and shall have the authority to act on behalf of the Contractor. All communications given to the Superintendent shall be as binding as if given to the Contractor. Either the Contractor or the Superintendent shall provide an emergency and home telephone number at which one or the other may be reached if necessary when work is not in progress.

C. The Contractor agrees to employ only orderly and competent workers, skillful in performance of the type of Work required under the Contract. The Contractor, Subcontractors, Sub-subcontractors, and their employees may not use or possess any firearms, alcoholic or other intoxicating beverages, illegal drugs or controlled substances while on the job or on the Owner's property, nor may such workers be intoxicated, or under the influence of alcohol or drugs, on the job. If the Owner or Owner's Representative notifies the Contractor that any worker is incompetent, disorderly or disobedient, has knowingly or repeatedly violated safety regulations, has possessed any firearms, or has possessed or was under the influence of alcohol or drugs on the job, the Contractor shall immediately remove such worker from performing Contract Work, and may not employ such worker again on Contract Work without the Owner's prior written consent. The Contractor shall at all times maintain good discipline and order on or off the site in all matters pertaining to the Project.

6.02 *Labor; Working Hours*

A. Contractor shall provide competent, suitably qualified personnel to survey and lay out the Work and perform construction as required by the Contract Documents. Contractor shall at all times maintain good discipline and order at the Site.

B. Except as otherwise required for the safety or protection of persons or the Work or property at the Site or adjacent thereto, and except as otherwise stated in the Contract Documents, all Work at the Site shall be performed during regular working hours. Contractor will not permit the performance of Work on a Saturday, Sunday, or any legal holiday without Owner's written consent (which will not be unreasonably withheld) given after prior written notice to Engineer.

6.03 *Services, Materials, and Equipment*

A. Unless otherwise specified in the Contract Documents, Contractor shall provide and assume full responsibility for all services, materials, equipment, labor, transportation, construction equipment and machinery, tools, appliances, fuel, power, light, heat, telephone, water, sanitary facilities, temporary facilities, and all other facilities and incidentals necessary for the performance, testing, start-up, and completion of the Work.

B. All materials and equipment incorporated into the Work shall be as specified or, if not specified, shall be of good quality and new, except as otherwise provided in the Contract Documents. All special warranties and guarantees required by the Specifications shall expressly run to the benefit of Owner. The Contractor agrees to assign to the Owner at the time of final completion of the Work any and all manufacturer's warranties relating to materials and labor used in the Work, and the Contractor further agrees to perform the Work in such manner to preserve any and all manufacture's warranties. If required by Engineer, Contractor shall furnish satisfactory evidence (including reports of required tests) as to the source, kind, and quality of materials and equipment.

1. The Contractor shall furnish twenty-four (24) hour callback maintenance service for the equipment provided by the Contractor for a period of three (3) months after completion and acceptance of the Work. This service shall include regular examination of the equipment by competent and trained employees of the Contractor and shall include all necessary adjustments, greasing, oiling, cleaning, supplies, and parts to keep the equipment in proper operation, except parts made necessary by misuse, accident, or negligence not caused by the Contractor or any Subcontractors of any tier.

C. All materials and equipment shall be stored, applied, installed, connected, erected, protected, used, cleaned, and conditioned in accordance with instructions of the applicable Supplier, except as otherwise may be provided in the Contract Documents.

6.04 *Progress Schedule*

A. Contractor shall adhere to the Progress Schedule established in accordance with Paragraph 2.07

Copyright © 2002 National Society of Professional Engineers for EJCDC. All rights reserved.

as it may be adjusted from time to time as provided below.

1. Contractor shall submit to Engineer for acceptance (to the extent indicated in Paragraph 2.07) proposed adjustments in the Progress Schedule that will not result in changing the Contract Times. Such adjustments will comply with any provisions of the General Requirements applicable thereto.

2. Proposed adjustments in the Progress Schedule that will change the Contract Times shall be submitted in accordance with the requirements of Article 12. Adjustments in Contract Times may only be made by a Change Order.

6.05 *Substitutes and "Or-Equals"*

A. Whenever an item of material or equipment is specified or described in the Contract Documents by using the name of a proprietary item or the name of a particular Supplier, the specification or description is intended to establish the type, function, appearance, and quality required. Unless the specification or description contains or is followed by words reading that no like, equivalent, or "or-equal" item or no substitution is permitted, other items of material or equipment or material or equipment of other Suppliers may be submitted to Engineer for review under the circumstances described below.

1. *"Or-Equal" Items:* If in Engineer's sole discretion an item of material or equipment proposed by Contractor is functionally equal to that named and sufficiently similar so that no change in related Work will be required, it may be considered by Engineer as an "or-equal" item, in which case review and approval of the proposed item may, in Engineer's sole discretion, be accomplished without compliance with some or all of the requirements for approval of proposed substitute items. For the purposes of this Paragraph 6.05.A.1, a proposed item of material or equipment will be considered functionally equal to an item so named if:

a. in the exercise of reasonable judgment Engineer determines that:

1) it is at least equal in materials of construction, quality, durability, appearance, strength, and design characteristics;

2) it will reliably perform at least equally well the function and achieve the results imposed by the design concept of the completed Project as a functioning whole,

3) it has a proven record of performance and availability of responsive service; and

b. Contractor certifies that, if approved and incorporated into the Work:

1) there will be no increase in cost to the Owner or increase in Contract Times, and

2) it will conform substantially to the detailed requirements of the item named in the Contract Documents.

2. Substitute Items

a. If in Engineer's sole discretion an item of material or equipment proposed by Contractor does not qualify as an "or-equal" item under Paragraph 6.05.A.1, it will be considered a proposed substitute item.

b. Contractor shall submit sufficient information as provided below to allow Engineer to determine that the item of material or equipment proposed is essentially equivalent to that named and an acceptable substitute therefor. Requests for review of proposed substitute items of material or equipment will not be accepted by Engineer from anyone other than Contractor.

c. The requirements for review by Engineer will be as set forth in Paragraph 6.05.A.2.d, as supplemented in the General Requirements and as Engineer may decide is appropriate under the circumstances.

d. Contractor shall make written application to Engineer for review of a proposed substitute item of material or equipment that Contractor seeks to furnish or use. The application:

1) shall certify that the proposed substitute item will:

a) perform adequately the functions and achieve the results called for by the general design,

b) be similar in substance to that specified, and

c) be suited to the same use as that specified;

2) will state:

a) the extent, if any, to which the use of the proposed substitute item will prejudice Contractor's achievement of Substantial Completion on time;

b) whether or not use of the proposed substitute item in the Work will require a change in any of the Contract Documents (or in the provisions of any other direct contract with Owner for other work on the Project) to adapt the design to the proposed substitute item; and

Copyright © 2002 National Society of Professional Engineers for EJCDC. All rights reserved.

c) whether or not incorporation or use of the proposed substitute item in connection with the Work is subject to payment of any license fee or royalty;

3) will identify:

a) all variations of the proposed substitute item from that specified , and

b) available engineering, sales, maintenance, repair, and replacement services;

4) and shall contain an itemized estimate of all costs or credits that will result directly or indirectly from use of such substitute item, including costs of redesign and claims of other contractors affected by any resulting change,

B. *Substitute Construction Methods or Procedures:* If a specific means, method, technique, sequence, or procedure of construction is expressly required by the Contract Documents, Contractor may furnish or utilize a substitute means, method, technique, sequence, or procedure of construction approved by Engineer. Contractor shall submit sufficient information to allow Engineer, in Engineer's sole discretion, to determine that the substitute proposed is equivalent to that expressly called for by the Contract Documents. The requirements for review by Engineer will be similar to those provided in Paragraph 6.05.A.2.

C. *Engineer's Evaluation:* Engineer will be allowed seven (7) days within which to evaluate each proposal or submittal made pursuant to Paragraphs 6.05.A and 6.05.B. Engineer may require Contractor to furnish additional data about the proposed substitute item. Engineer will be the sole judge of acceptability. No "or equal" or substitute will be ordered, installed or utilized until Engineer's review is complete, which will be evidenced by either a Change Order for a substitute or an approved Shop Drawing for an "or equal." Engineer will advise Contractor in writing of any negative determination.

D. *Special Guarantee:* Owner may require Contractor to furnish at Contractor's expense a special performance guarantee or other surety with respect to any substitute.

E. *Engineer's Cost Reimbursement*: Engineer will record Engineer's costs in evaluating a substitute proposed or submitted by Contractor pursuant to Paragraphs 6.05.A.2 and 6.05.B Whether or not Engineer approves a substitute item so proposed or submitted by Contractor, Contractor shall reimburse Owner for the charges of Engineer for evaluating each such proposed substitute. Contractor shall also reimburse Owner for the charges of Engineer for making changes in the Contract Documents (or in the provisions of any other direct contract with Owner) resulting from the acceptance of each proposed substitute.

F. *Contractor's Expense*: Contractor shall provide all data in support of any proposed substitute or "or-equal" at Contractor's expense.

6.06 *Concerning Subcontractors, Suppliers, and Others*

A. Not later than 14 days after the execution of the Agreement by the Contractor and Owner, the Contractor shall furnish the Owner and the Engineer, in writing, with (1) the name, trade, and subcontract amount for each Subcontractor and (2) the names of all persons or entities proposed as manufacturers of the products identified in the Specifications (including those who are to furnish materials or equipment fabricated to a special design) and, where applicable, the name of the installing Subcontractor. Contractor shall not employ any Subcontractor, Supplier, or other individual or entity (including those acceptable to Owner as indicated in Paragraph 6.06.B), whether initially or as a replacement, against whom Owner may have reasonable objection. Contractor shall not be required to employ any Subcontractor, Supplier, or other individual or entity to furnish or perform any of the Work against whom Contractor has reasonable objection.

B. If the Supplementary Conditions require the identity of certain Subcontractors, Suppliers, or other individuals or entities to be submitted to Owner in advance for acceptance by Owner by a specified date prior to the Effective Date of the Agreement, and if Contractor has submitted a list thereof in accordance with the Supplementary Conditions, Owner's acceptance (either in writing or by failing to make written objection thereto by the date indicated for acceptance or objection in the Bidding Documents or the Contract Documents) of any such Subcontractor, Supplier, or other individual or entity so identified may be revoked on the basis of reasonable objection after due investigation. Contractor shall submit an acceptable replacement for the rejected Subcontractor, Supplier, or other individual or entity, and the Contract Price will be adjusted by the difference in the cost occasioned by such replacement, and an appropriate Change Order will be issued. No acceptance by Owner of any such Subcontractor, Supplier, or other individual or entity, whether initially or as a replacement, shall constitute a waiver of any right of Owner or Engineer to reject defective Work.

C. Contractor shall be fully responsible to Owner and Engineer for all acts and omissions of the Subcontractors, Suppliers, and other individuals or entities performing or furnishing any of the Work just as Contractor is responsible for Contractor's own acts and omissions. Nothing in the Contract Documents:

1. shall create for the benefit of any such Subcontractor, Supplier, or other individual or entity any

Copyright © 2002 National Society of Professional Engineers for EJCDC. All rights reserved.

contractual relationship between Owner or Engineer and any such Subcontractor, Supplier or other individual or entity, nor

2. shall anything in the Contract Documents create any obligation on the part of Owner or Engineer to pay or to see to the payment of any moneys due any such Subcontractor, Supplier, or other individual or entity except as may otherwise be required by Laws and Regulations.

D. Contractor shall be solely responsible for scheduling and coordinating the Work of Subcontractors, Suppliers, and other individuals or entities performing or furnishing any of the Work under a direct or indirect contract with Contractor.

E. Contractor shall require all Subcontractors, Suppliers, and such other individuals or entities performing or furnishing any of the Work to communicate with Engineer through Contractor.

F. The divisions and sections of the Specifications and the identifications of any Drawings shall not control Contractor in dividing the Work among Subcontractors or Suppliers or delineating the Work to be performed by any specific trade.

G. All Work performed for Contractor by a Subcontractor or Supplier will be pursuant to an appropriate agreement between Contractor and the Subcontractor or Supplier which specifically binds the Subcontractor or Supplier to the applicable terms and conditions of the Contract Documents for the benefit of Owner and Engineer. Whenever any such agreement is with a Subcontractor or Supplier who is listed as an additional insured on the property insurance provided in Paragraph 5.06, the agreement between the Contractor and the Subcontractor or Supplier will contain provisions whereby the Subcontractor or Supplier waives all rights against Owner, Contractor, and Engineer,, and all other individuals or entities identified in the Supplementary Conditions to be listed as insureds or additional insureds (and the officers, directors, partners, employees, agents, consultants and subcontractors of each and any of them) for all losses and damages caused by, arising out of, relating to, or resulting from any of the perils or causes of loss covered by such policies and any other property insurance applicable to the Work. If the insurers on any such policies require separate waiver forms to be signed by any Subcontractor or Supplier, Contractor will obtain the same.

6.07 *Patent Fees and Royalties*

A. Contractor shall pay all license fees and royalties and assume all costs incident to the use in the performance of the Work or the incorporation in the Work of any invention, design, process, product, or device which is the subject of patent rights or copyrights held by others. If a particular invention, design, process, product, or device is specified in the Contract Documents for use in the performance of the Work and if to the actual knowledge of Owner or Engineer its use is subject to patent rights or copyrights calling for the payment of any license fee or royalty to others, the existence of such rights shall be disclosed by Owner in the Contract Documents.

B. To the fullest extent permitted by Laws and Regulations, Contractor shall indemnify and hold harmless Owner and Engineer, and the officers, directors, partners, employees, agents, consultants and subcontractors of each and any of them from and against all claims, costs, losses, and damages (including but not limited to all fees and charges of engineers, architects, attorneys, and other professionals and all court or arbitration or other dispute resolution costs) arising out of or relating to any infringement of patent rights or copyrights incident to the use in the performance of the Work or resulting from the incorporation in the Work of any invention, design, process, product, or device not specified in the Contract Documents.

6.08 *Permits*

A. Unless otherwise provided in the Supplementary Conditions, Contractor shall obtain and pay for all construction permits and licenses. Owner shall assist Contractor, when necessary, in obtaining such permits and licenses. Contractor shall pay all governmental charges and inspection fees necessary for the prosecution of the Work which are applicable at the time of opening of Bids, or, if there are no Bids, on the Effective Date of the Agreement. Owner shall pay all charges of utility owners for connections for providing permanent service to the Work.

6.09 *Laws and Regulations*

A. Contractor shall give all notices required by and shall comply with all Laws and Regulations applicable to the performance of the Work. Except where otherwise expressly required by applicable Laws and Regulations, neither Owner nor Engineer shall be responsible for monitoring Contractor's compliance with any Laws or Regulations. The Contractor shall plan and execute its operations in compliance with all applicable Federal, State and local laws and regulations, including those concerning control and abatement of water pollution and prevention and control of air pollution. The Contractor shall conduct activities in compliance with applicable laws and regulations and other requirements of the Contract relating to the environment, and its protection at all times. Unless otherwise specifically determined, the Contractor is responsible for obtaining and maintaining permits related to storm water run-off. The Contractor shall conduct operations consistent with storm water run-off permit conditions.

B. If Contractor performs any Work knowing or having reason to know that it is contrary to Laws or

Copyright © 2002 National Society of Professional Engineers for EJCDC. All rights reserved.

Regulations, Contractor shall bear all claims, costs, losses, and damages (including but not limited to all fees and charges of engineers, architects, attorneys, and other professionals and all court or arbitration or other dispute resolution costs) arising out of or relating to such Work.

C. Changes in Laws or Regulations not known at the time of opening of Bids (or, on the Effective Date of the Agreement if there were no Bids) having an effect on the cost or time of performance of the Work shall be the subject of an adjustment in Contract Price or Contract Times. If Owner and Contractor are unable to agree on entitlement to or on the amount or extent, if any, of any such adjustment, a Claim may be made therefor as provided in Paragraph 10.05.

6.10 *Taxes*

A. Contractor shall pay all sales, consumer, use, and other similar taxes required to be paid by Contractor in accordance with the Laws and Regulations of the place of the Project which are applicable during the performance of the Work.

B. The Owner is an exempt organization as defined by Chapter 11 of the Property Tax Code of Texas and is thereby exempt from payment of Sales Tax under Chapter 151, Limited Use Sales, Excise and Use Tax, Texas Tax Code, and Article 1066 (C), Local Sales and Use Tax Act, Revised Civil Statutes of Texas. The Owner may issue a "Texas Sales and Use Tax Exemption Certification" authorizing the Contractor to use same in the purchase of materials for the Project.

6.11 *Use of Site and Other Areas*

A. Limitation on Use of Site and Other Areas

1. Contractor shall confine construction equipment, the storage of materials and equipment, and the operations of workers to the Site and other areas permitted by Laws and Regulations, and shall not unreasonably encumber the Site and other areas with construction equipment or other materials or equipment. Contractor shall assume full responsibility for any damage to any such land or area, or to the owner or occupant thereof, or of any adjacent land or areas resulting from the performance of the Work.

2. Should any claim be made by any such owner or occupant because of the performance of the Work, Contractor shall promptly settle with such other party by negotiation or otherwise resolve the claim by arbitration or other dispute resolution proceeding or at law.

3. To the fullest extent permitted by Laws and Regulations, Contractor shall indemnify and hold harmless Owner and Engineer, and the officers, directors, partners, employees, agents, consultants and subcontractors of each and any of them from and against all claims, costs, losses, and damages (including but not limited to all fees and charges of engineers, architects, attorneys, and other professionals and all court or arbitration or other dispute resolution costs) arising out of or relating to any claim or action, legal or equitable, brought by any such owner or occupant against Owner, Engineer, or any other party indemnified hereunder to the extent caused by or based upon Contractor's performance of the Work.

B. *Removal of Debris During Performance of the Work:* During the progress of the Work Contractor shall keep the Site and other areas free from accumulations of waste materials, rubbish, and other debris. Removal and disposal of such waste materials, rubbish, and other debris shall conform to applicable Laws and Regulations.

C. *Cleaning:* Prior to Substantial Completion of the Work Contractor shall clean the Site and the Work and make it ready for utilization by Owner. At the completion of the Work Contractor shall remove from the Site all tools, appliances, construction equipment and machinery, and surplus materials and shall restore to original condition all property not designated for alteration by the Contract Documents.

D. *Loading Structures:* Contractor shall not load nor permit any part of any structure to be loaded in any manner that will endanger the structure, nor shall Contractor subject any part of the Work or adjacent property to stresses or pressures that will endanger it.

6.12 *Record Documents*

A. Contractor shall maintain in a safe place at the Site one record copy of all Drawings, Specifications, Addenda, Change Orders, Work Change Directives, Field Orders, and written interpretations and clarifications in good order and annotated to show changes made during construction. These record documents together with all approved Samples and a counterpart of all approved Shop Drawings will be available to Engineer for reference. Upon completion of the Work, these record documents, Samples, and Shop Drawings will be delivered to Engineer for Owner.

B. The Record Documents shall be updated to show the "As-Constructed" Drawings and Specifications monthly prior to submission of periodic Applications for Payment. Failure to update the "As-Constructed" Drawings and Specifications constitutes cause for denial of a progress payment otherwise due.

C. Upon Substantial Completion of the Work, these record documents, samples and Shop Drawings shall be promptly delivered to Owner. Prior to requesting a Substantial Completion inspection, Contractor shall furnish a complete set of the marked up "As-Constructed" Drawings and Specifications and one copy of same. Concurrently, Contractor shall submit a preliminary copy of each operating and maintenance manual required by

Copyright © 2002 National Society of Professional Engineers for EJCDC. All rights reserved.

the Contract Documents for review by the Owner and Engineer. Once determined acceptable, Contractor shall provide Mylar prints of professionally drafted "As Constructed" Drawings and Specifications in bound volumes along with electronic copies on CD in a format acceptable to Owner, two (2) sets of photocopies of the Mylar prints, two sets of operating and maintenance manuals, two sets of approved submittals, and any other record documents required by the Contract Documents.

6.13 *Safety and Protection*

A. Contractor shall be solely responsible for initiating, maintaining and supervising all safety precautions and programs in connection with the Work. Contractor shall take all necessary precautions for the safety of, and shall provide the necessary protection to prevent damage, injury or loss to:

1. all persons on the Site or who may be affected by the Work;

2. all the Work and materials and equipment to be incorporated therein, whether in storage on or off the Site; and

3. other property at the Site or adjacent thereto, including trees, shrubs, lawns, walks, pavements, roadways, structures, utilities, and Underground Facilities not designated for removal, relocation, or replacement in the course of construction.

B. Contractor shall comply with all applicable Laws and Regulations relating to the safety of persons or property, or to the protection of persons or property from damage, injury, or loss; and shall erect and maintain all necessary safeguards for such safety and protection. Contractor shall notify owners of adjacent property and of Underground Facilities and other utility owners when prosecution of the Work may affect them, and shall cooperate with them in the protection, removal, relocation, and replacement of their property.

C. All damage, injury, or loss to any property referred to in Paragraph 6.13.A.2 or 6.13.A.3 caused, directly or indirectly, in whole or in part, by Contractor, any Subcontractor, Supplier, or any other individual or entity directly or indirectly employed by any of them to perform any of the Work, or anyone for whose acts any of them may be liable, shall be remedied by Contractor (except damage or loss attributable to the fault of Drawings or Specifications or to the acts or omissions of Owner or Engineer or , or anyone employed by any of them, or anyone for whose acts any of them may be liable, and not attributable, directly or indirectly, in whole or in part, to the fault or negligence of Contractor or any Subcontractor, Supplier, or other individual or entity directly or indirectly employed by any of them).

D. Contractor's duties and responsibilities for safety and for protection of the Work shall continue until such time as all the Work is completed and Engineer has issued a notice to Owner and Contractor in accordance with Paragraph 14.07.B that the Work is acceptable (except as otherwise expressly provided in connection with Substantial Completion).

E. When the Work requires excavation which either exceed four (4) feet in depth or results in any worker's upper body being positioned below grade level, the Contractor is required to submit a trenching plan to the Owner prior to commencing trenching operations. The plan is required to be prepared and sealed by a professional engineer registered in the State of Texas, and employed by the Contractor. Said engineer cannot be anyone who is otherwise engaged directly or indirectly with this Project.

F. The Contractor shall erect and maintain, as required by existing conditions and performance of the Contractor, reasonable safeguards for safety and protection, including posting danger signs and other warnings against hazards, promulgating safety regulations and notifying owners and users of adjacent sites and utilities.

G. When use or storage of explosives or other hazardous materials or equipment or unusual methods are necessary for execution of the Work, the Contractor shall exercise utmost care and carry on such activities under supervision of properly qualified personnel.

6.14 *Safety Representative*

A. Contractor shall designate a qualified and experienced safety representative at the Site whose duties and responsibilities shall be the prevention of accidents and the maintaining and supervising of safety precautions and programs.

6.15 *Hazard Communication Programs*

A. Contractor shall be responsible for coordinating any exchange of material safety data sheets or other hazard communication information required to be made available to or exchanged between or among employers at the Site in accordance with Laws or Regulations.

6.16 *Emergencies*

A. In emergencies affecting the safety or protection of persons or the Work or property at the Site or adjacent thereto, Contractor is obligated to act to prevent threatened damage, injury, or loss. Contractor shall give Engineer written notice immediately, and in no instance more than 24 hours after the alleged emergency, if Contractor believes that any significant changes in the Work or variations from the Contract Documents have been caused thereby or are required as a result thereof. If Engineer determines that a change in the Contract Documents is required because of the action taken by

Copyright © 2002 National Society of Professional Engineers for EJCDC. All rights reserved.

Contractor in response to such an emergency, a Work Change Directive or Change Order will be issued.

6.17 *Shop Drawings and Samples*

A. Contractor shall submit Shop Drawings and Samples to Engineer for review and approval in accordance with the acceptable Schedule of Submittals (as required by Paragraph 2.07). Each submittal will be identified as Engineer may require.

1. Shop Drawings

a. Submit number of copies specified in the General Requirements.

b. Data shown on the Shop Drawings will be complete with respect to quantities, dimensions, specified performance and design criteria, materials, and similar data to show Engineer the services, materials, and equipment Contractor proposes to provide and to enable Engineer to review the information for the limited purposes required by Paragraph 6.17.D.

2. *Samples:* Contractor shall also submit Samples to Engineer for review and approval in accordance with the acceptable schedule of Shop Drawings and Sample submittals.

a. Submit number of Samples specified in the Specifications.

b. Clearly identify each Sample as to material, Supplier, pertinent data such as catalog numbers, the use for which intended and other data as Engineer may require to enable Engineer to review the submittal for the limited purposes required by Paragraph 6.17.D.

B. Where a Shop Drawing or Sample is required by the Contract Documents or the Schedule of Submittals , any related Work performed prior to Engineer's review and approval of the pertinent submittal will be at the sole expense and responsibility of Contractor.

C. Submittal Procedures

1. Before submitting each Shop Drawing or Sample, Contractor shall have determined and verified:

a. all field measurements, quantities, dimensions, specified performance and design criteria, installation requirements, materials, catalog numbers, and similar information with respect thereto;

b. the suitability of all materials with respect to intended use, fabrication, shipping, handling, storage, assembly, and installation pertaining to the performance of the Work;

c. all information relative to Contractor's responsibilities for means, methods, techniques, sequences, and procedures of construction, and safety precautions and programs incident thereto; and

d. shall also have reviewed and coordinated each Shop Drawing or Sample with other Shop Drawings and Samples and with the requirements of the Work and the Contract Documents.

2. Each submittal shall bear a stamp or specific written certification that Contractor has satisfied Contractor's obligations under the Contract Documents with respect to Contractor's review and approval of that submittal.

3. With each submittal, Contractor shall give Engineer specific written notice of any variations, that the Shop Drawing or Sample may have from the requirements of the Contract Documents. This notice shall be both a written communication separate from the Shop Drawing's or Sample Submittal; and, in addition, by a specific notation made on each Shop Drawing or Sample submitted to Engineer for review and approval of each such variation.

D. Engineer's Review

1. Engineer will provide timely review of Shop Drawings and Samples in accordance with the Schedule of Submittals acceptable to Engineer. Engineer's review and approval will be only to determine if the items covered by the submittals will, after installation or incorporation in the Work, conform to the information given in the Contract Documents and be compatible with the design concept of the completed Project as a functioning whole as indicated by the Contract Documents.

2. Engineer's review and approval will not extend to means, methods, techniques, sequences, or procedures of construction (except where a particular means, method, technique, sequence, or procedure of construction is specifically and expressly called for by the Contract Documents) or to safety precautions or programs incident thereto. The review and approval of a separate item as such will not indicate approval of the assembly in which the item functions.

3. Engineer's review and approval shall not relieve Contractor from responsibility for any variation from the requirements of the Contract Documents unless Contractor has complied with the requirements of Paragraph 6.17.C.3 and Engineer has given written approval of each such variation by specific written notation thereof incorporated in or accompanying the Shop Drawing or Sample. Engineer's review and approval shall not relieve Contractor from responsibility for complying with the requirements of Paragraph 6.17.C.1.

E. Resubmittal Procedures

Copyright © 2002 National Society of Professional Engineers for EJCDC. All rights reserved.

1. Contractor shall make corrections required by Engineer and shall return the required number of corrected copies of Shop Drawings and submit, as required, new Samples for review and approval. Contractor shall direct specific attention in writing to revisions other than the corrections called for by Engineer on previous submittals.

6.18 *Continuing the Work*

A. Contractor shall carry on the Work and adhere to the Progress Schedule during all disputes or disagreements with Owner. No Work shall be delayed or postponed pending resolution of any disputes or disagreements, except as permitted by Paragraph 15.04 or as Owner and Contractor may otherwise agree in writing.

6.19 *Contractor's General Warranty and Guarantee*

A. Contractor warrants and guarantees to Owner that all Work will be in accordance with the Contract Documents and will not be defective. Engineer and its Related Entities shall be entitled to rely on representation of Contractor's warranty and guarantee.

B. Contractor's warranty and guarantee hereunder excludes defects or damage caused by:

1. abuse, modification, or improper maintenance or operation by persons other than Contractor, Subcontractors, Suppliers, or any other individual or entity for whom Contractor is responsible; or

2. normal wear and tear under normal usage.

C. Contractor's obligation to perform and complete the Work in accordance with the Contract Documents shall be absolute. None of the following will constitute an acceptance of Work that is not in accordance with the Contract Documents or a release of Contractor's obligation to perform the Work in accordance with the Contract Documents:

1. observations by Engineer;

2. recommendation by Engineer or payment by Owner of any progress or final payment;

3. the issuance of a certificate of Substantial Completion by Engineer or any payment related thereto by Owner;

4. use or occupancy of the Work or any part thereof by Owner;

5. any review and approval of a Shop Drawing or Sample submittal or the issuance of a notice of acceptability by Engineer;

6. any inspection, test, or approval by others; or

7. any correction of defective Work by Owner.

6.20 *Indemnification*

A. CONTRACTOR SHALL INDEMNIFY AND HOLD OWNER HARMLESS AGAINST ANY LOSS OR DAMAGE TO PERSONS OR PROPERTY AS A RESULT OF OPERATIONS GROWING OUT OF THE PERFORMANCE OF THIS CONTRACT AND CAUSED BY THE NEGLIGENCE OR CARELESSNESS OF CONTRACTOR, CONTRACTOR'S EMPLOYEES, SUBCONTRACTORS, AND AGENTS OR LICENSEES. THE CONTRACTOR SHALL UNCONDITIONALLY DEFEND AT ITS OWN COST AND SHALL INDEMNIFY AND HOLD HARMLESS THE OWNER, ENGINEER, ENGINEER'S CONSULTANTS AND SUB-CONSULTANTS AND THEIR RESPECTIVE OFFICERS, DIRECTORS, PARTNERS, EMPLOYEES, AGENTS AND OTHER CONSULTANTS AND ANY OF THEM FROM AND AGAINST ALL CLAIMS, JUDGMENTS, COSTS, LIENS, LIABILITIES, LOSSES, DAMAGES, PENALTIES, INTEREST, FEES, FINES, COSTS AND EXPENSES (INCLUDING BUT NOT LIMITED TO ALL FEES AND CHARGES OF ENGINEERS, ARCHITECTS, ATTORNEYS AND OTHER PROFESSIONALS AND ALL COURT OR OTHER DISPUTE RESOLUTION COSTS) IN ANY MANNER ARISING DIRECTLY OR INDIRECTLY OUT OF, OR RESULTING FROM, THE WORK PERFORMED HEREUNDER OR THE MATERIALS TO BE FURNISHED UNDER THE CONTRACT DOCUMENTS, THAT IS:

1. ATTRIBUTABLE TO BODILY INJURY, SICKNESS, DISEASE OR DEATH (INCLUDING EMPLOYEES OF CONTRACTOR AND OWNER), OR TO INJURY TO OR DESTRUCTION OF TANGIBLE PROPERTY (INCLUDING PROPERTY OF CONTRACTOR AND OWNER AND THE WORK ITSELF), INCLUDING THE LOSS OF USE RESULTING THEREFROM, AND

2. CAUSED IN WHOLE OR IN PART BY ANY NEGLIGENT ACT, ERROR OR OMISSION; SOLE NEGLIGENCE; CONCURRENT NEGLIGENCE; JOINT NEGLIGENCE; ACTIVE OR PASSIVE NEGLIGENCE; GROSS NEGLIGENCE; NEGLIGENCE PER SE; STRICT LIABILITY; INVERSE CONDEMNATION, PATENT INFRINGEMENT; COPYRIGHT; CONDITION OF PROPERTY OR ITS PREMISES; LATENT DEFECTS; DEFECTS IN MATERIALS, WORKMANSHIP, OR DESIGN; WORKERS' COMPENSATION CLAIMS; DISABILITY ACT CLAIMS; EMPLOYEE BENEFIT CLAIMS; AND FAILURE TO COMPLY WITH ANY OF THE

Copyright © 2002 National Society of Professional Engineers for EJCDC. All rights reserved.

PROVISIONS OF THE CONTRACT DOCUMENTS; OR OTHER ACT OR OMISSION OF CONTRACTOR, OR CONTRACTOR'S EMPLOYEES, SUBCONTRACTORS, OR AGENTS OR LICENSEES.

B. In any and all claims against Owner or Engineer or any of their respective consultants, agents, officers, directors, partners, or employees by any employee (or the survivor or personal representative of such employee) of Contractor, any Subcontractor, any Supplier, or any individual or entity directly or indirectly employed by any of them to perform any of the Work, or anyone for whose acts any of them may be liable, the indemnification obligation under Paragraph 6.20.A shall not be limited in any way by any limitation on the amount or type of damages, compensation, or benefits payable by or for Contractor or any such Subcontractor, Supplier, or other individual or entity under workers' compensation acts, disability benefit acts, or other employee benefit acts.

C. The indemnification obligations of Contractor under Paragraph 6.20.A shall not extend to the liability of Engineer and Engineer's officers, directors, partners, employees, agents, consultants and subcontractors arising out of:

1. the preparation or approval of, or the failure to prepare or approve, maps, Drawings, opinions, reports, surveys, Change Orders, designs, or Specifications; or

2. giving directions or instructions, or failing to give them, if that is the primary cause of the injury or damage.

6.21 *Delegation of Professional Design Services*

A. Contractor will not be required to provide professional design services unless such services are specifically required by the Contract Documents for a portion of the Work or unless such services are required to carry out Contractor's responsibilities for construction means, methods, techniques, sequences and procedures. Contractor shall not be required to provide professional services in violation of applicable law.

B. If professional design services or certifications by a design professional related to systems, materials or equipment are specifically required of Contractor by the Contract Documents, Owner and Engineer will specify all performance and design criteria that such services must satisfy. Contractor shall cause such services or certifications to be provided by a properly licensed professional, whose signature and seal shall appear on all drawings, calculations, specifications, certifications, Shop Drawings and other submittals prepared by such professional. Shop Drawings and other submittals related to the Work designed or certified by such professional, if prepared by others, shall bear such professional's written approval when submitted to Engineer.

C. Owner and Engineer shall be entitled to rely upon the adequacy, accuracy and completeness of the services, certifications or approvals performed by such design professionals, provided Owner and Engineer have specified to Contractor all performance and design criteria that such services must satisfy.

D. Pursuant to this Paragraph 6.21, Engineer's review and approval of design calculations and design drawings will be only for the limited purpose of checking for conformance with performance and design criteria given and the design concept expressed in the Contract Documents. Engineer's review and approval of Shop Drawings and other submittals (except design calculations and design drawings) will be only for the purpose stated in Paragraph 6.17.D.1.

E. Contractor shall not be responsible for the adequacy of the performance or design criteria required by the Contract Documents.

ARTICLE 7 - OTHER WORK AT THE SITE

7.01 *Related Work at Site*

A. Owner may perform other work related to the Project at the Site with Owner's employees, or via other direct contracts therefor, or have other work performed by utility owners. If such other work is not noted in the Contract Documents, then:

1. written notice thereof will be given to Contractor prior to starting any such other work.

B. Contractor shall afford each other contractor who is a party to such a direct contract, each utility owner and Owner, if Owner is performing other work with Owner's employees, proper and safe access to the Site, a reasonable opportunity for the introduction and storage of materials and equipment and the execution of such other work, and shall properly coordinate the Work with theirs. Contractor shall do all cutting, fitting, and patching of the Work that may be required to properly connect or otherwise make its several parts come together and properly integrate with such other work. Contractor shall not endanger any work of others by cutting, excavating, or otherwise altering their work and will only cut or alter their work with the written consent of Engineer and the others whose work will be affected. The duties and responsibilities of Contractor under this Paragraph are for the benefit of such utility owners and other contractors to the extent that there are comparable provisions for the benefit of Contractor in said direct contracts between Owner and such utility owners and other contractors.

Copyright © 2002 National Society of Professional Engineers for EJCDC. All rights reserved.

C. If the proper execution or results of any part of Contractor's Work depends upon work performed by others under this Article 7, Contractor shall inspect such other work and promptly report to Engineer in writing any delays, defects, or deficiencies in such other work that render it unavailable or unsuitable for the proper execution and results of Contractor's Work. Contractor's failure to so report will constitute an acceptance of such other work as fit and proper for integration with Contractor's Work except for latent defects and deficiencies in such other work.

7.02 *Coordination*

A. If Owner intends to contract with others for the performance of other work on the Project at the Site, the following will be set forth in Supplementary Conditions:

1. the individual or entity who will have authority and responsibility for coordination of the activities among the various contractors will be identified;

2. the specific matters to be covered by such authority and responsibility will be itemized; and

3. the extent of such authority and responsibilities will be provided.

B. Unless otherwise provided in the Supplementary Conditions, Owner shall have sole authority and responsibility for such coordination.

7.03 *Legal Relationships*

A. Paragraphs 7.01.A and 7.02 are not applicable for utilities not under the control of Owner.

B. Each other direct contract of Owner under Paragraph 7.01.A shall provide that the other contractor is liable to Owner and Contractor for the reasonable direct delay and disruption costs incurred by Contractor as a result of the other contractor's actions or inactions.

C. Contractor shall be liable to Owner and any other contractor for the reasonable direct delay and disruption costs incurred by such other contractor as a result of Contractor's action or inactions.

ARTICLE 8 - OWNER'S RESPONSIBILITIES

8.01 *Communications to Contractor*

A. Except as otherwise provided in these General Conditions, Owner shall issue all communications to Contractor through Engineer.

8.02 *Replacement of Engineer*

A. In case of termination of the employment of Engineer, Owner shall appoint an engineer to whom Contractor makes no reasonable objection, whose status under the Contract Documents shall be that of the former Engineer.

8.03 *Furnish Data*

A. Owner shall furnish the data required of Owner under the Contract Documents.

8.04 *Pay When Due*

A. Owner shall make payments to Contractor when they are due as provided in Paragraphs 14.02.C and 14.07.C.

8.05 *Lands and Easements; Reports and Tests*

A. Owner's duties in respect of providing lands and easements and providing engineering surveys to establish reference points are set forth in Paragraphs 4.01 and 4.05. Paragraph 4.02 refers to Owner's identifying and making available to Contractor copies of reports of explorations and tests of subsurface conditions and drawings of physical conditions in or relating to existing surface or subsurface structures at or contiguous to the Site that have been utilized by Engineer in preparing the Contract Documents.

8.06 *Insurance*

A. Owner's responsibilities, if any, in respect to purchasing and maintaining liability and property insurance are set forth in Article 5.

8.07 *Change Orders*

A. Owner is obligated to execute Change Orders as indicated in Paragraph 10.03.

8.08 *Inspections, Tests, and Approvals*

A. Owner's responsibility in respect to certain inspections, tests, and approvals is set forth in Paragraph 13.03.B.

8.09 *Limitations on Owner's Responsibilities*

A. The Owner shall not supervise, direct, or have control or authority over, nor be responsible for, Contractor's means, methods, techniques, sequences, or procedures of construction, or the safety precautions and programs incident thereto, or for any failure of Contractor to comply with Laws and Regulations applicable to the performance of the Work. Owner will not be responsible for Contractor's failure to perform the Work in accordance with the Contract Documents.

Copyright © 2002 National Society of Professional Engineers for EJCDC. All rights reserved.

8.10 *Undisclosed Hazardous Environmental Condition*

A. Owner's responsibility in respect to an undisclosed Hazardous Environmental Condition is set forth in Paragraph 4.06.

ARTICLE 9 - ENGINEER'S STATUS DURING CONSTRUCTION

9.01 *Owner's Representative*

A. Engineer will be Owner's representative during the construction period. The duties and responsibilities and the limitations of authority of Engineer as Owner's representative during construction are set forth in the Contract Documents and will not be changed without written consent of Owner and Engineer.

9.02 *Visits to Site*

A. Engineer will make visits to the Site at intervals appropriate to the various stages of construction as Engineer deems necessary in order to observe as an experienced and qualified design professional the progress that has been made and the quality of the various aspects of Contractor's executed Work. Based on information obtained during such visits and observations, Engineer, for the benefit of Owner, will determine, in general, if the Work is proceeding in accordance with the Contract Documents. Engineer will not be required to make exhaustive or continuous inspections on the Site to check the quality or quantity of the Work. Engineer's efforts will be directed toward providing for Owner a greater degree of confidence that the completed Work will conform generally to the Contract Documents. On the basis of such visits and observations, Engineer will keep Owner informed of the progress of the Work and will endeavor to guard Owner against defective Work.

B. Engineer's visits and observations are subject to all the limitations on Engineer's authority and responsibility set forth in Paragraph 9.09. Particularly, but without limitation, during or as a result of Engineer's visits or observations of Contractor's Work Engineer will not supervise, direct, control, or have authority over or be responsible for Contractor's means, methods, techniques, sequences, or procedures of construction, or the safety precautions and programs incident thereto, or for any failure of Contractor to comply with Laws and Regulations applicable to the performance of the Work.

9.03 *Project Representative*

A. If Owner and Engineer agree, Engineer will furnish a Resident Project Representative to assist Engineer in providing more extensive observation of the Work. The authority and responsibilities of any such Resident Project Representative and assistants will be as provided in the Supplementary Conditions, and limitations on the responsibilities thereof will be as provided in Paragraph 9.09. If Owner designates another representative or agent to represent Owner at the Site who is not Engineer's consultant, agent or employee, the responsibilities and authority and limitations thereon of such other individual or entity will be as provided in the Supplementary Conditions.

9.04 *Authorized Variations in Work*

A. Engineer may authorize minor variations in the Work from the requirements of the Contract Documents which do not involve an adjustment in the Contract Price or the Contract Times and are compatible with the design concept of the completed Project as a functioning whole as indicated by the Contract Documents. These may be accomplished by a Field Order and will be binding on Owner and also on Contractor, who shall perform the Work involved promptly. If Owner or Contractor believes that a Field Order justifies an adjustment in the Contract Price or Contract Times, or both, and the parties are unable to agree on entitlement to or on the amount or extent, if any, of any such adjustment, a Claim may be made therefor as provided in Paragraph 10.05.

9.05 *Rejecting Defective Work*

A. Engineer will have authority to reject Work which Engineer believes to be defective, or that Engineer believes will not produce a completed Project that conforms to the Contract Documents or that will prejudice the integrity of the design concept of the completed Project as a functioning whole as indicated by the Contract Documents. The Engineer will obtain on a weekly basis the Contractor's signature on all Field Orders that will contain an acknowledgement by the Contractor that the Field Order does not involve an adjustment in the Contract Price or in the Contract Times.

9.06 *Shop Drawings, Change Orders and Payments*

A. In connection with Engineer's authority, and limitations thereof, as to Shop Drawings and Samples, see Paragraph 6.17.

B. In connection with Engineer's authority, and limitations thereof, as to design calculations and design drawings submitted in response to a delegation of professional design services, if any, see Paragraph 6.21.

C. In connection with Engineer's authority as to Change Orders, see Articles 10, 11, and 12.

D. In connection with Engineer's authority as to Applications for Payment, see Article 14.

9.07 *Determinations for Unit Price Work*

Copyright © 2002 National Society of Professional Engineers for EJCDC. All rights reserved.

A. Engineer will determine the actual quantities and classifications of Unit Price Work performed by Contractor. Engineer will review with Contractor the Engineer's preliminary determinations on such matters before rendering a written decision thereon (by recommendation of an Application for Payment or otherwise). Engineer's written decision thereon will be final and binding (except as modified by Engineer to reflect changed factual conditions or more accurate data) upon Owner and Contractor, subject to the provisions of Paragraph 10.05.

9.08 *Decisions on Requirements of Contract Documents and Acceptability of Work*

A. Engineer will be the initial interpreter of the requirements of the Contract Documents and judge of the acceptability of the Work thereunder. All matters in question and other matters between Owner and Contractor arising prior to the date final payment is due relating to the acceptability of the Work, and the interpretation of the requirements of the Contract Documents pertaining to the performance of the Work, will be referred initially to Engineer in writing within 30 days of the event giving rise to the question

B. Engineer will, with reasonable promptness, render a written decision on the issue referred. If Owner or Contractor believe that any such decision entitles them to an adjustment in the Contract Price or Contract Times or both, a Claim may be made under Paragraph 10.05. The date of Engineer's decision shall be the date of the event giving rise to the issues referenced for the purposes of Paragraph 10.05.B.

C. Engineer's written decision on the issue referred will be final and binding on Owner and Contractor, subject to the provisions of Paragraph 10.05.

D. When functioning as interpreter and judge under this Paragraph 9.08, Engineer will not show partiality to Owner or Contractor and will not be liable in connection with any interpretation or decision rendered in good faith in such capacity.

9.09 *Limitations on Engineer's Authority and Responsibilities*

A. Neither Engineer's authority or responsibility under this Article 9 or under any other provision of the Contract Documents nor any decision made by Engineer in good faith either to exercise or not exercise such authority or responsibility or the undertaking, exercise, or performance of any authority or responsibility by Engineer shall create, impose, or give rise to any duty in contract, tort, or otherwise owed by Engineer to Contractor, any Subcontractor, any Supplier, any other individual or entity, or to any surety for or employee or agent of any of them.

B. Engineer will not supervise, direct, control, or have authority over or be responsible for Contractor's means, methods, techniques, sequences, or procedures of construction, or the safety precautions and programs incident thereto, or for any failure of Contractor to comply with Laws and Regulations applicable to the performance of the Work. Engineer will not be responsible for Contractor's failure to perform the Work in accordance with the Contract Documents.

C. Engineer will not be responsible for the acts or omissions of Contractor or of any Subcontractor, any Supplier, or of any other individual or entity performing any of the Work.

D. Engineer's review of the final Application for Payment and accompanying documentation and all maintenance and operating instructions, schedules, guarantees, bonds, certificates of inspection, tests and approvals, and other documentation required to be delivered by Paragraph 14.07.A will only be to determine generally that their content complies with the requirements of, and in the case of certificates of inspections, tests, and approvals that the results certified indicate compliance with the Contract Documents.

E. The limitations upon authority and responsibility set forth in this Paragraph 9.09 shall also apply to, the Resident Project Representative, if any, and assistants, if any.

ARTICLE 10 - CHANGES IN THE WORK; CLAIMS

10.01 *Authorized Changes in the Work*

A. Without invalidating the Contract and without notice to any surety, Owner may, at any time or from time to time, order additions, deletions, or revisions in the Work by a Change Order, or a Work Change Directive. Upon receipt of any such document, Contractor shall promptly proceed with the Work involved which will be performed under the applicable conditions of the Contract Documents (except as otherwise specifically provided). A change in the Contract Price or the Contract Times shall be accomplished only be written Amendment, a written Change Order, or a written Work Change Directive. Accordingly, no course of conduct or dealings between the parties, no expressed or implied acceptance of alterations or additions to the Work, and no claim that the Owner has been unjustly enriched by any alterations or additions to the Work shall be the basis of any claim for an increase in any amount due under the Contract Documents or a change in any time period provided for in the Contract Documents.

B. If Owner and Contractor are unable to agree on entitlement to, or on the amount or extent, if any, of an adjustment in the Contract Price or Contract Times, or both, that should be allowed as a result of a Work Change

Copyright © 2002 National Society of Professional Engineers for EJCDC. All rights reserved.

Directive, a Claim may be made therefor as provided in Paragraph 10.05.

10.02 *Unauthorized Changes in the Work*

A. Contractor shall not be entitled to an increase in the Contract Price or an extension of the Contract Times with respect to any work performed that is not required by the Contract Documents as amended, modified, or supplemented as provided in Paragraph 3.04, except in the case of an emergency as provided in Paragraph 6.16 or in the case of uncovering Work as provided in Paragraph 13.04.B.

10.03 *Execution of Change Orders*

A. Owner and Contractor shall execute appropriate Change Orders recommended by Engineer covering:

1. changes in the Work which are: (i) ordered by Owner pursuant to Paragraph 10.01.A, (ii) required because of acceptance of defective Work under Paragraph 13.08.A or Owner's correction of defective Work under Paragraph 13.09, or (iii) agreed to by the parties;

2. changes in the Contract Price or Contract Times which are agreed to by the parties, including any undisputed sum or amount of time for Work actually performed in accordance with a Work Change Directive; and

3. changes in the Contract Price or Contract Times which embody the substance of any written decision rendered by Engineer pursuant to Paragraph 10.05; provided that, in lieu of executing any such Change Order, an appeal may be taken from any such decision in accordance with the provisions of the Contract Documents and applicable Laws and Regulations, but during any such appeal, Contractor shall carry on the Work and adhere to the Progress Schedule as provided in Paragraph 6.18.A.

Agreements on any Change Order shall constitute a final settlement of all matters relating to the change in the Work that is the subject of a Change Order, including, but not limited to, all direct and indirect costs associated with such change and any and all adjustments to the Contract Price and the Contract Times. In the event a Change Order increases the Contract Price, the Contractor shall include the Work covered by such Change Order in Applications for Payment as if such Work were originally part of the Contract Documents.

10.04 *Notification to Surety*

A. If notice of any change affecting the general scope of the Work or the provisions of the Contract Documents (including, but not limited to, Contract Price or Contract Times) is required by the provisions of any bond to be given to a surety, the giving of any such notice will be Contractor's responsibility. The amount of each applicable bond will be adjusted to reflect the effect of any such change.

10.05 *Claims*

A. *Engineer's Decision Required*: All Claims, except those waived pursuant to Paragraph 14.09, shall be referred to the Engineer for decision. A decision by Engineer shall be required as a condition precedent to any exercise by Owner or Contractor of any rights or remedies either may otherwise have under the Contract Documents or by Laws and Regulations in respect of such Claims.

B. *Notice:* Written notice stating the general nature of each Claim, shall be delivered by the claimant to Engineer and the other party to the Contract promptly (but in no event later than 30 days) after the start of the event giving rise thereto. The responsibility to substantiate a Claim shall rest with the party making the Claim. Notice of the amount or extent of the Claim, with supporting data shall be delivered to the Engineer and the other party to the Contract within 60 days after the start of such event (unless Engineer allows additional time for claimant to submit additional or more accurate data in support of such Claim). A Claim for an adjustment in Contract Price shall be prepared in accordance with the provisions of Paragraph 12.01.B. A Claim for an adjustment in Contract Time shall be prepared in accordance with the provisions of Paragraph 12.02.B. Each Claim shall be accompanied by claimant's written statement that the adjustment claimed is the entire adjustment to which the claimant believes it is entitled as a result of said event. The opposing party shall submit any response to Engineer and the claimant within 30 days after receipt of the claimant's last submittal (unless Engineer allows additional time).

C. *Engineer's Action*: Engineer will review each Claim and, within 30 days after receipt of the last submittal of the claimant or the last submittal of the opposing party, if any, take one of the following actions in writing:

1. deny the Claim in whole or in part,

2. approve the Claim, or

3. notify the parties that the Engineer is unable to resolve the Claim if, in the Engineer's sole discretion, it would be inappropriate for the Engineer to do so. For purposes of further resolution of the Claim, such notice shall be deemed a denial.

D. In the event that Engineer does not take action on a Claim within said 30 days, the Claim shall be deemed denied.

E. Engineer's written action under Paragraph 10.05.C or denial pursuant to Paragraphs 10.05.C.3 or 10.05.D will be final and binding upon Owner and Contractor, unless Owner or Contractor invoke the

Copyright © 2002 National Society of Professional Engineers for EJCDC. All rights reserved.

dispute resolution procedure set forth in Article 16 within 30 days of such action or denial.

F. No Claim for an adjustment in Contract Price or Contract Times will be valid if not submitted in accordance with this Paragraph 10.05.

G. In calculating the amount of any claim or measure of damages for breach of contract (such provision to survive any termination of following such breach), the following standards shall apply:

1. No indirect or consequential damages will be allowed;

2. No recovery shall be based on a comparison of planned expenditures to total actual expenditures, or on estimated losses of labor efficiency, or on a comparison pf planned manloading to actual manloading, or any other analysis that is used to show damages indirectly;

3. Damages are limited to extra costs specifically shown to have been directly caused by a proven wrong;

4. No damages shall be allowed for delay;

5. No damages will be allowed for home office overhead or other home office charges or any Eichleay formula calculation; and

6. No profit will be allowed on any damage claim.

ARTICLE 11 - COST OF THE WORK; ALLOWANCES; UNIT PRICE WORK

11.01 *Cost of the Work*

A. *Costs Included:* The term Cost of the Work means the sum of all costs, except those excluded in Paragraph 11.01.B, necessarily incurred and paid by Contractor in the proper performance of the Work. When the value of any Work covered by a Change Order or when a Claim for an adjustment in Contract Price is determined on the basis of Cost of the Work, the costs to be reimbursed to Contractor will be only those additional or incremental costs required because of the change in the Work or because of the event giving rise to the Claim. Except as otherwise may be agreed to in writing by Owner, such costs shall be in amounts no higher than those prevailing in the locality of the Project, shall include only the following items, and shall not include any of the costs itemized in Paragraph 11.01.B.

1. Payroll costs for employees in the direct employ of Contractor in the performance of the Work under schedules of job classifications agreed upon by Owner and Contractor. Such employees shall include, without limitation, superintendents, foremen, and other personnel employed full time at the Site. Payroll costs for employees not employed full time on the Work shall be apportioned on the basis of their time spent on the Work. Payroll costs shall include, but not be limited to, salaries and wages plus the cost of fringe benefits, which shall include social security contributions, unemployment, excise, and payroll taxes, workers' compensation, health and retirement benefits, bonuses, sick leave, vacation and holiday pay applicable thereto. The expenses of performing Work outside of regular working hours, on Saturday, Sunday, or legal holidays, shall be included in the above to the extent authorized in writing by Owner.

2. Cost of all materials and equipment furnished and incorporated in the Work, including costs of transportation and storage thereof, and Suppliers' field services required in connection therewith. All cash discounts shall accrue to Contractor unless Owner deposits funds with Contractor with which to make payments, in which case the cash discounts shall accrue to Owner. All trade discounts, rebates and refunds and returns from sale of surplus materials and equipment shall accrue to Owner, and Contractor shall make provisions so that they may be obtained.

3. Payments made by Contractor to Subcontractors for Work performed by Subcontractors. If required by Owner, Contractor shall obtain competitive bids from subcontractors acceptable to Owner and Contractor and shall deliver such bids to Owner, who will then determine, with the advice of Engineer, which bids, if any, will be acceptable. If any subcontract provides that the Subcontractor is to be paid on the basis of Cost of the Work plus a fee, the Subcontractor's Cost of the Work and fee shall be determined in the same manner as Contractor's Cost of the Work and fee as provided in this Paragraph 11.01.

4. Costs of special consultants (including but not limited to Engineers, architects, testing laboratories, surveyors, attorneys, and accountants) employed for services specifically related to the Work, but only to the extent authorized and approved in writing by Owner and Engineer.

5. Supplemental costs including the following:

a. The proportion of necessary transportation, travel, and subsistence expenses of Contractor's employees incurred in discharge of duties connected with the Work.

b. Cost, including transportation and maintenance, of all materials, supplies, equipment, machinery, appliances, office, and temporary facilities at the Site, and hand tools not owned by the workers, which are consumed in the performance of the Work, and cost, less market value, of such items used but not consumed which remain the property of Contractor.

c. Rentals of all construction equipment and machinery, and the parts thereof whether rented from

Copyright © 2002 National Society of Professional Engineers for EJCDC. All rights reserved.

Contractor or others in accordance with rental agreements approved by Owner with the advice of Engineer, and the costs of transportation, loading, unloading, assembly, dismantling, and removal thereof. All such costs shall be in accordance with the terms of said rental agreements. The rental of any such equipment, machinery, or parts shall cease when the use thereof is no longer necessary for the Work.

d. Sales, consumer, use, and other similar taxes related to the Work, and for which Contractor is liable, imposed by Laws and Regulations.

e. Deposits lost for causes other than negligence of Contractor, any Subcontractor, or anyone directly or indirectly employed by any of them or for whose acts any of them may be liable, and royalty payments and fees for permits and licenses.

f. Losses and damages (and related expenses) caused by damage to the Work, not compensated by insurance or otherwise, sustained by Contractor in connection with the performance of the Work (except losses and damages within the deductible amounts of property insurance established in accordance with Paragraph 5.06.D), provided such losses and damages have resulted from causes other than the negligence of Contractor, any Subcontractor, or anyone directly or indirectly employed by any of them or for whose acts any of them may be liable. Such losses shall include settlements made with the written consent and approval of Owner. No such losses, damages, and expenses shall be included in the Cost of the Work for the purpose of determining Contractor's fee.

g. The cost of utilities, fuel, and sanitary facilities at the Site.

h. Minor expenses such as telegrams, long distance telephone calls, telephone service at the Site, expresses, and similar petty cash items in connection with the Work.

i. The costs of premiums for all bonds and insurance Contractor is required by the Contract Documents to purchase and maintain.

B. *Costs Excluded:* The term Cost of the Work shall not include any of the following items:

1. Payroll costs and other compensation of Contractor's officers, executives, principals (of partnerships and sole proprietorships), general managers, safety managers, engineers, architects, estimators, attorneys, auditors, accountants, purchasing and contracting agents, expediters, timekeepers, clerks, and other personnel employed by Contractor, whether at the Site or in Contractor's principal or branch office for general administration of the Work and not specifically included in the agreed upon schedule of job classifications referred to in Paragraph 11.01.A.1 or specifically covered by Paragraph 11.01.A.4, all of which are to be considered administrative costs covered by the Contractor's fee.

2. Expenses of Contractor's principal and branch offices other than Contractor's office at the Site.

3. Any part of Contractor's capital expenses, including interest on Contractor's capital employed for the Work and charges against Contractor for delinquent payments.

4. Costs due to the negligence of Contractor, any Subcontractor, or anyone directly or indirectly employed by any of them or for whose acts any of them may be liable, including but not limited to, the correction of defective Work, disposal of materials or equipment wrongly supplied, and making good any damage to property.

5. Other overhead or general expense costs of any kind and the costs of any item not specifically and expressly included in Paragraphs 11.01.A and 11.01.B.

C. *Contractor's Fee:* When all the Work is performed on the basis of cost-plus, Contractor's fee shall be determined as set forth in the Agreement. When the value of any Work covered by a Change Order or when a Claim for an adjustment in Contract Price is determined on the basis of Cost of the Work, Contractor's fee shall be determined as set forth in Paragraph 12.01.C.

D. *Documentation:* Whenever the Cost of the Work for any purpose is to be determined pursuant to Paragraphs 11.01.A and 11.01.B, Contractor will establish and maintain records thereof in accordance with generally accepted accounting practices and submit in a form acceptable to Engineer an itemized cost breakdown together with supporting data.

E. *Pricing Information Requirements:* The Contractor agrees to provide and require all Subcontractors to provide a breakdown of allowable labor and labor burden cost information as outlined herein. This information will be used to evaluate the potential cost of labor and labor burden related to Change Order Work. It is intended that this information represent an accurate estimate of the Contractor's actual labor and labor burden cost components. This information is not intended to establish fixed billing or Change Order pricing labor rates. However, at the time Change Orders are priced the submitted cost data for labor rates may be used to price Change Order Work. The accuracy of any such agreed-upon labor cost components used to price Change Orders will be subject to later audit. Approved Change Order amounts may be adjusted later to correct the impact of inaccurate labor cost components if the agreed-upon labor cost components are determined to be inaccurate.

11.02 *Allowances*

Copyright © 2002 National Society of Professional Engineers for EJCDC. All rights reserved.

A. It is understood that Contractor has included in the Contract Price all allowances so named in the Contract Documents and shall cause the Work so covered to be performed for such sums and by such persons or entities as may be acceptable to Owner and Engineer.

B. Cash Allowances

1. Contractor agrees that:

a. the cash allowances include the cost to Contractor (less any applicable trade discounts) of materials and equipment required by the allowances to be delivered at the Site, and all applicable taxes; and

b. Contractor's costs for unloading and handling on the Site, labor, installation , overhead, profit, and other expenses contemplated for the cash allowances have been included in the Contract Price and not in the allowances, and no demand for additional payment on account of any of the foregoing will be valid.

C. Contingency Allowance

1. Contractor agrees that a contingency allowance, if any, is for the sole use of Owner to cover unanticipated costs.

D. Prior to final payment, an appropriate Change Order will be issued as recommended by Engineer to reflect actual amounts due Contractor on account of Work covered by allowances, and the Contract Price shall be correspondingly adjusted.

11.03 *Unit Price Work*

A. Where the Contract Documents provide that all or part of the Work is to be Unit Price Work, initially the Contract Price will be deemed to include for all Unit Price Work an amount equal to the sum of the unit price for each separately identified item of Unit Price Work times the estimated quantity of each item as indicated in the Agreement.

B. The estimated quantities of items of Unit Price Work are not guaranteed and are solely for the purpose of comparison of Bids and determining an initial Contract Price. Determinations of the actual quantities and classifications of Unit Price Work performed by Contractor will be made by Engineer subject to the provisions of Paragraph 9.07.

C. Each unit price will be deemed to include an amount considered by Contractor to be adequate to cover Contractor's overhead and profit for each separately identified item.

D. When "plan quantity" is indicated for a bid item, the Contractor shall be paid the amount specified in the Contract Documents without any measurements.

E. A Major Item is any individual bid item in the Bid that has a total cost equal to or greater than five percent (5%) of the original Contract Amount or $50,000, whichever is greater, computed on the basis of bid quantities and Contract unit prices.

F. The Owner or the Contractor may make a Claim for an adjustment in the Contract Amount if:

1. the actual quantity of any Major Item should become as much as twenty percent (20%) more than or twenty percent (20%) less than in the Bid; or

2. The Contractor presents proper documentation contesting the accuracy of "plan quantity," and Owner's Representative verifies quantity and determines original quantity is in error by five percent (5%) or more.

ARTICLE 12 - CHANGE OF CONTRACT PRICE; CHANGE OF CONTRACT TIMES

12.01 *Change of Contract Price*

A. The Contract Price may only be changed by a Change Order.

1. If the total of amount of all Change Orders, in the aggregate, involves a decrease or an increase of more than $25,000, no Change Order shall be valid unless it is approved by the City Council of the City of Georgetown. The original Contract Price may not be increased by more than twenty-five percent (25%) under any circumstances and it may not be decreased more than twenty-five percent (25%) without the consent of the Contractor to such decrease.

2. Any claim for an adjustment in the Contract Amount shall be made by Written Notice delivered by the party making the Claim to the other party promptly (but in no event later than thirty (30) calendar days) after the start of the occurrence or event giving rise to the Claim and stating the general nature of the Claim, but in any case before proceeding to execute the work considered to be additional costs (except for Emergencies as described in Article 6). Notice of the amount of the Claim with supporting data shall be delivered within thirty (30) calendar days after Written Notice of Claim is delivered by claimant, and shall represent that the adjustment claimed covers all known amounts to which claimant is entitled as a result of said occurrence or event.

B. The value of any Work covered by a Change Order or of any Claim for an adjustment in the Contract Price will be determined as follows:

Copyright © 2002 National Society of Professional Engineers for EJCDC. All rights reserved.

1. where the Work involved is covered by unit prices contained in the Contract Documents, by application of such unit prices to the quantities of the items involved (subject to the provisions of Paragraph 11.03); or

2. where the Work involved is not covered by unit prices contained in the Contract Documents, by a mutually agreed lump sum (which may include an allowance for overhead and profit not necessarily in accordance with Paragraph 12.01.C.2); or

3. where the Work involved is not covered by unit prices contained in the Contract Documents and agreement to a lump sum is not reached under Paragraph 12.01.B.2, on the basis of the Cost of the Work (determined as provided in Paragraph 11.01) plus a Contractor's fee for overhead and profit (determined as provided in Paragraph 12.01.C).

C. *Contractor's Fee:* The Contractor's fee for overhead and profit shall be determined as follows:

1. a mutually acceptable fixed fee; or

2. if a fixed fee is not agreed upon, then a fee based on the following percentages of the various portions of the Cost of the Work:

a. for costs incurred under Paragraphs 11.01.A.1 and 11.01.A.2, the Contractor's fee shall be 10 percent;

b. for costs incurred under Paragraph 11.01.A.3, the Contractor's fee shall be five percent;

c. where one or more tiers of subcontracts are on the basis of Cost of the Work plus a fee and no fixed fee is agreed upon, the intent of Paragraph 12.01.C.2.a is that the Subcontractor who actually performs the Work, at whatever tier, will be paid a fee of 10 percent of the costs incurred by such Subcontractor under Paragraphs 11.01.A.1 and 11.01.A.2 and that any higher tier Subcontractor and Contractor will each be paid a fee of five percent of the amount paid to the next lower tier Subcontractor;

d. no fee shall be payable on the basis of costs itemized under Paragraphs 11.01.A.4, 11.01.A.5, and 11.01.B;

e. the amount of credit to be allowed by Contractor to Owner for any change which results in a net decrease in cost will be the amount of the actual net decrease in cost plus a deduction in Contractor's fee by an amount equal to five percent of such net decrease; and

f. when both additions and credits are involved in any one change, the adjustment in Contractor's fee shall be computed on the basis of the net change in accordance with Paragraphs 12.01.C.2.a through 12.01.C.2.e, inclusive.

12.02 *Change of Contract Times*

A. The Contract Times may only be changed by a Change Order. Any Claim for an adjustment in the Contract Times shall be based on written notice submitted by the party making the Claim to the Engineer and the other party to the Contract in accordance with the provisions of Paragraph 10.05.

B. Any adjustment of the Contract Times covered by a Change Order or any Claim for an adjustment in the Contract Times will be determined in accordance with the provisions of this Article 12.

C. All time limits stated in the Contract Documents are of the essence of the Agreement. The Contractor acknowledges and understands that failure by the Contractor to complete the Work in accordance with the construction schedule will cause significant damages to the Owner, and subject Contractor to Liquidated Damages as stated in the Agreement.

12.03 *Delays*

A. Where Contractor is prevented from completing any part of the Work within the Contract Times due to delay beyond the control of Contractor, the Contract Times will be extended in an amount equal to the time lost due to such delay if a Claim is made therefor as provided in Paragraph 12.02.A. Delays beyond the control of Contractor shall include, but not be limited to, acts or neglect by Owner, acts or neglect of utility owners or other contractors performing other work as contemplated by Article 7, fires, floods, epidemics, abnormal weather conditions, or acts of God.

B. If Owner, Engineer, or other contractors or utility owners performing other work for Owner as contemplated by Article 7, or anyone for whom Owner is responsible, delays, disrupts, or interferes with the performance or progress of the Work, then Contractor shall be entitled to an equitable adjustment in the Contract Price or the Contract Times, or both. Contractor's entitlement to an adjustment of the Contract Times is conditioned on such adjustment being essential to Contractor's ability to complete the Work within the Contract Times.

C If Contractor is delayed in the performance or progress of the Work by fire, flood, epidemic, abnormal weather conditions, acts of God, acts or failures to act of utility owners not under the control of Owner, or other causes not the fault of and beyond control of Owner and Contractor, then Contractor shall be entitled to an equitable adjustment in Contract Times, if such adjustment is essential to Contractor's ability to complete the Work within the Contract Times. Such an adjustment shall be Contractor's sole and exclusive remedy for the delays described in this Paragraph 12.03.C.

Copyright © 2002 National Society of Professional Engineers for EJCDC. All rights reserved.

D. Owner, Engineer and the Related Entities of each of them shall not be liable to Contractor for any claims, costs, losses, or damages (including but not limited to all fees and charges of Engineers, architects, attorneys, and other professionals and all court or arbitration or other dispute resolution costs) sustained by Contractor on or in connection with any other project or anticipated project.

E. Contractor shall not be entitled to an adjustment in Contract Price or Contract Times for delays within the control of Contractor. Delays attributable to and within the control of a Subcontractor or Supplier shall be deemed to be delays within the control of Contractor.

F. Notwithstanding anything to the contrary in the Contract Documents, an extension in the Contract Times, to the extent permitted under Paragraphs 12.02 and 12.03, shall be the sole and exclusive remedy of the Contractor for any (1) delay in the commencement, prosecution, or completion of the Work; (2) hindrance or obstruction in the performance of the Work; (3) loss of productivity; or (4) other similar claims (collectively referred to in this paragraph as "Delays") whether or not such Delays are foreseeable. In no event shall the Contractor be entitled to any compensation or recovery of any damages, in connection with any Delay, including, without limitation, consequential damages, lost opportunity costs, impact damages, or other similar remuneration. The Owner's exercise of any of its rights or remedies under the Contract Documents (including, without limitation, ordering changes in the Work, directing suspension, rescheduling, or correction of the Work, or terminating this Agreement for its convenience), regardless of the extent or frequency of the Owner's exercise of such rights or remedies, shall not be construed as active interference with the Contractor's performance of the Work. If the Contractor submits a progress report indicating, or otherwise expressing an intention to achieve, completion of the Work prior to any completion date required by the Contract Documents or expiration of the Contract Time, no liability of the Owner to the Contractor for any failure of the Contractor to so complete the Work shall be created or implied.

G. Under a Calendar Day Contract, the Contractor may also be granted an extension of time because of unusual inclement weather that is beyond the normal weather expected for the Georgetown, Texas area. Normal weather which prevents the Contractor from performing Work is expected during a Calendar Day Contract, and is <u>not</u> a justification for an extension of time. The following delineates the number of days per month for which, for purposes of Calendar Day Contracts, expected normal weather will prevent performance of Work:

January.....	7 days
February.....	7 days
March.....	7 days
April.....	7 days
May.....	8 days
June.....	6 days
July.....	6 days
August.....	5 days
September.....	7 days
October.....	7 days
November.....	7 days
December.....	7 days

Days per month exceeding the number shown above may be credited as Rain Days if a Claim is made in accordance with this Article 12 and meets the following definition: a "Rain Day" is any day in which a weather event occurs at the site and is sufficient to prevent the Contractor from performing units of Work critical to maintaining the Progress Schedule.

ARTICLE 13 - TESTS AND INSPECTIONS; CORRECTION, REMOVAL OR ACCEPTANCE OF DEFECTIVE WORK

13.01 *Notice of Defects*

A. Prompt notice of all defective Work of which Owner or Engineer has actual knowledge will be given to Contractor. All defective Work may be rejected, corrected, or accepted as provided in this Article 13.

13.02 *Access to Work*

A. Owner, Engineer, their consultants and other representatives and personnel of Owner, independent testing laboratories, and governmental agencies with jurisdictional interests will have access to the Site and the Work at reasonable times for their observation, inspecting, and testing. Contractor shall provide them proper and safe conditions for such access and advise them of Contractor's Site safety procedures and programs so that they may comply therewith as applicable.

13.03 *Tests and Inspections*

A. Contractor shall give Engineer timely notice of readiness of the Work for all required inspections, tests, or approvals and shall cooperate with inspection and testing personnel to facilitate required inspections or tests.

B. Owner shall employ and pay for the services of an independent testing laboratory to perform all inspections, tests, or approvals required by the Contract Documents except:

1. for inspections, tests, or approvals covered by Paragraphs 13.03.C and 13.03.D below;

2. that costs incurred in connection with tests or inspections conducted pursuant to Paragraph 13.04.B shall be paid as provided in said Paragraph 13.04.C; and

Copyright © 2002 National Society of Professional Engineers for EJCDC. All rights reserved.

3. as otherwise specifically provided in the Contract Documents.

C. If Laws or Regulations of any public body having jurisdiction require any Work (or part thereof) specifically to be inspected, tested, or approved by an employee or other representative of such public body, Contractor shall assume full responsibility for arranging and obtaining such inspections, tests, or approvals, pay all costs in connection therewith, and furnish Engineer the required certificates of inspection or approval.

D. Contractor shall be responsible for arranging and obtaining and shall pay all costs in connection with any inspections, tests, or approvals required for Owner's and Engineer's acceptance of materials or equipment to be incorporated in the Work; or acceptance of materials, mix designs, or equipment submitted for approval prior to Contractor's purchase thereof for incorporation in the Work. Such inspections, tests, or approvals shall be performed by organizations acceptable to Owner and Engineer.

E. If any Work (or the work of others) that is to be inspected, tested, or approved is covered by Contractor without written concurrence of Engineer, it must, if requested by Engineer, be uncovered for observation.

F. Uncovering Work as provided in Paragraph 13.03.E shall be at Contractor's expense unless Contractor has given Engineer timely notice of Contractor's intention to cover the same and Engineer has not acted in the time set forth in the Contractor's notice.

13.04 *Uncovering Work*

A. If any Work is covered contrary to the written request of Engineer, it must, if requested by Engineer, be uncovered for Engineer's observation and replaced at Contractor's expense.

B. If Engineer considers it necessary or advisable that covered Work be observed by Engineer or inspected or tested by others, Contractor, at Engineer's request, shall uncover, expose, or otherwise make available for observation, inspection, or testing as Engineer may require, that portion of the Work in question, furnishing all necessary labor, material, and equipment.

C. If it is found that the uncovered Work is defective, Contractor shall pay all claims, costs, losses, and damages (including but not limited to all fees and charges of engineers, architects, attorneys, and other professionals and all court or arbitration or other dispute resolution costs) arising out of or relating to such uncovering, exposure, observation, inspection, and testing, and of satisfactory replacement or reconstruction (including but not limited to all costs of repair or replacement of work of others), unless the Contractor fails to provide written notice as required by Paragraph 13.03.F; and Owner shall be entitled to an appropriate decrease in the Contract Price. If the parties are unable to agree as to the amount thereof, Owner may make a Claim therefor as provided in Paragraph 10.05.

D. If, the uncovered Work is not found to be defective, Contractor shall be allowed an increase in the Contract Price or an extension of the Contract Times, or both, directly attributable to such uncovering, exposure, observation, inspection, testing, replacement, and reconstruction. If the parties are unable to agree as to the amount or extent thereof, Contractor may make a Claim therefor as provided in Paragraph 10.05.

13.05 *Owner May Stop the Work*

A. If the Work is defective, or Contractor fails to supply sufficient skilled workers or suitable materials or equipment, or fails to perform the Work in such a way that the completed Work will conform to the Contract Documents, Owner may order Contractor to stop the Work, or any portion thereof, until the cause for such order has been eliminated; however, this right of Owner to stop the Work shall not give rise to any duty on the part of Owner to exercise this right for the benefit of Contractor, any Subcontractor, any Supplier, any other individual or entity, or any surety for, or employee or agent of any of them.

13.06 *Correction or Removal of Defective Work*

A. Promptly after receipt of notice, Contractor shall correct all defective Work, whether or not fabricated, installed, or completed, or, if the Work has been rejected by Engineer, remove it from the Project and replace it with Work that is not defective. Contractor shall pay all claims, costs, losses, and damages (including but not limited to all fees and charges of engineers, architects, attorneys, and other professionals and all court or arbitration or other dispute resolution costs) arising out of or relating to such correction or removal (including but not limited to all costs of repair or replacement of work of others).

B. When correcting defective Work under the terms of this Paragraph 13.06 or Paragraph 13.07, Contractor shall take no action that would void or otherwise impair Owner's special warranty and guarantee, if any, on said Work.

13.07 *Correction Period*

A. If within one year after the date of Substantial Completion (or such longer period of time as may be prescribed by the terms of any applicable special guarantee required by the Contract Documents) or by any specific provision of the Contract Documents, any Work is found to be defective, or if the repair of any damages to the land or areas made available for Contractor's use by Owner or permitted by Laws and Regulations as contemplated in Paragraph 6.11.A is found to be defective, Contractor shall promptly, without cost to

Copyright © 2002 National Society of Professional Engineers for EJCDC. All rights reserved.

Owner and in accordance with Owner's written instructions:

1. repair such defective land or areas; or

2. correct such defective Work; or

3. if the defective Work has been rejected by Owner, remove it from the Project and replace it with Work that is not defective, and

4. satisfactorily correct or repair or remove and replace any damage to other Work, to the work of others or other land or areas resulting therefrom.

B. If Contractor does not promptly comply with the terms of Owner's written instructions, or in an emergency where delay would cause serious risk of loss or damage, Owner may have the defective Work corrected or repaired or may have the rejected Work removed and replaced. All claims, costs, losses, and damages (including but not limited to all fees and charges of engineers, architects, attorneys, and other professionals and all court or arbitration or other dispute resolution costs) arising out of or relating to such correction or repair or such removal and replacement (including but not limited to all costs of repair or replacement of work of others) will be paid by Contractor.

C. In special circumstances where a particular item of equipment is placed in continuous service for the benefit of the Owner before Substantial Completion of all the Work, the correction period for that item may start to run from an earlier date if so provided in the Specifications.

D. Where defective Work (and damage to other Work resulting therefrom) has been corrected or removed and replaced under this Paragraph 13.07, the correction period hereunder with respect to such Work will be extended for an additional period of one year after such correction or removal and replacement has been satisfactorily completed.

E. Contractor's obligations under this Paragraph 13.07 are in addition to any other obligation or warranty. The provisions of this Paragraph 13.07 shall not be construed as a substitute for or a waiver of the provisions of any applicable statute of limitation or repose.

13.08 *Acceptance of Defective Work*

A. If, instead of requiring correction or removal and replacement of defective Work, Owner (and, prior to Engineer's recommendation of final payment, Engineer) prefers to accept it, Owner may do so. Contractor shall pay all claims, costs, losses, and damages (including but not limited to all fees and charges of engineers, architects, attorneys, and other professionals and all court or arbitration or other dispute resolution costs) attributable to Owner's evaluation of and determination to accept such defective Work (such costs to be approved by Engineer as to reasonableness) and the diminished value of the Work to the extent not otherwise paid by Contractor pursuant to this sentence. If any such acceptance occurs prior to Engineer's recommendation of final payment, a Change Order will be issued incorporating the necessary revisions in the Contract Documents with respect to the Work, and Owner shall be entitled to an appropriate decrease in the Contract Price, reflecting the diminished value of Work so accepted. If the parties are unable to agree as to the amount thereof, Owner may make a Claim therefor as provided in Paragraph 10.05. If the acceptance occurs after such recommendation, an appropriate amount will be paid by Contractor to Owner.

13.09 *Owner May Correct Defective Work*

A. If Contractor fails within a reasonable time after written notice from Engineer to correct defective Work or to remove and replace rejected Work as required by Engineer in accordance with Paragraph 13.06.A, or if Contractor fails to perform the Work in accordance with the Contract Documents, or if Contractor fails to comply with any other provision of the Contract Documents, Owner may, after seven days written notice to Contractor, correct or remedy any such deficiency.

B. In exercising the rights and remedies under this Paragraph 13.09, Owner shall proceed expeditiously. In connection with such corrective or remedial action, Owner may exclude Contractor from all or part of the Site, take possession of all or part of the Work and suspend Contractor's services related thereto, take possession of Contractor's tools, appliances, construction equipment and machinery at the Site, and incorporate in the Work all materials and equipment stored at the Site or for which Owner has paid Contractor but which are stored elsewhere. Contractor shall allow Owner, Owner's representatives, agents and employees, Owner's other contractors, and Engineer and Engineer's consultants access to the Site to enable Owner to exercise the rights and remedies under this Paragraph.

C. All claims, costs, losses, and damages (including but not limited to all fees and charges of engineers, architects, attorneys, and other professionals and all court or arbitration or other dispute resolution costs) incurred or sustained by Owner in exercising the rights and remedies under this Paragraph 13.09 will be charged against Contractor, and a Change Order will be issued incorporating the necessary revisions in the Contract Documents with respect to the Work; and Owner shall be entitled to an appropriate decrease in the Contract Price. If the parties are unable to agree as to the amount of the adjustment, Owner may make a Claim therefor as provided in Paragraph 10.05. Such claims, costs, losses and damages will include but not be limited to all costs of repair, or replacement of work of others destroyed or damaged by correction, removal, or replacement of Contractor's defective Work.

Copyright © 2002 National Society of Professional Engineers for EJCDC. All rights reserved.

D. Contractor shall not be allowed an extension of the Contract Times because of any delay in the performance of the Work attributable to the exercise by Owner of Owner's rights and remedies under this Paragraph 13.09.

ARTICLE 14 - PAYMENTS TO CONTRACTOR AND COMPLETION

14.01 *Schedule of Values*

A. The Schedule of Values established as provided in Paragraph 2.07.A will serve as the basis for progress payments and will be incorporated into a form of Application for Payment acceptable to Engineer. Progress payments on account of Unit Price Work will be based on the number of units completed.

14.02 *Progress Payments*

A. Applications for Payments

1. At least 20 days before the date established in the Agreement for each progress payment (but not more often than once a month), Contractor shall submit to Engineer for review an Application for Payment filled out and signed by Contractor covering the Work completed as of the date of the Application and accompanied by such supporting documentation as is required by the Contract Documents. If payment is requested on the basis of materials and equipment not incorporated in the Work but delivered and suitably stored at the Site or at another location agreed to in writing, the Application for Payment shall also be accompanied by a bill of sale, invoice, or other documentation warranting that Owner has received the materials and equipment free and clear of all Liens and evidence that the materials and equipment are covered by appropriate property insurance or other arrangements to protect Owner's interest therein, all of which must be satisfactory to Owner.

2. Beginning with the second Application for Payment, each Application shall include an affidavit of Contractor stating that all previous progress payments received on account of the Work have been applied on account to discharge Contractor's legitimate obligations associated with prior Applications for Payment.

3. The OWNER will pay to the CONTRACTOR the total amount of approved Application for Payment, less five percent (5%) of the amount thereof, which five percent (5%) or the highest maximum amount of retainage as may be allowed under Government Code Chapter 2253 will be retained until thirty (30) days after Final Completion of the Work, less all previous payments and less all sums that may be retained by the OWNER under the terms of this Contract. The CONTRACTOR, at the OWNER'S option, may be relieved of the obligation to complete the Work and, thereupon, the CONTRACTOR shall receive payment of the balance due under the Contract subject to the conditions stated under paragraph 15.2.
.

4. Each application for payment shall be accompanied by the following, all in form and substance satisfactory to the Owner:

a. A current Contractor's lien waiver and duly executed and acknowledged sworn statement showing all Subcontractors and material suppliers with whom the Contractor has entered into Subcontracts, the amount of each such Subcontract, the amount requested for any Subcontractor and material supplier in the requested progress payment, and the amount to be paid to the Contractor from such progress payment, together with similar sworn statements from all such Subcontractors and material suppliers;

b. Duly executed waivers of mechanics' and material suppliers' liens from all Subcontractors and, when appropriate, from material suppliers and lower-tier Subcontractors establishing payment or satisfaction of payment of all amounts requested by the Contractor on behalf of such entities or persons in any previous application for payment;

c. updated Progress Schedule;

d. monthly subcontractor report;

e. Contractor's estimate of the amount of the Work performed, labor furnished, and materials included in the Work using the agreed schedule of values; and

f. any other documentation required under the Supplementary Conditions or elsewhere in the Contract Documents; and

g. All information and materials required to comply with the requirements of the Contract Documents or reasonably requested by the Owner or the Engineer.

5. The Contractor shall also comply with the following specific requirements:

a. With each application for payment, the Contractor shall submit to the Owner a written list identifying each location where materials are stored off the project site and the value of the materials at each location. The Contractor shall procure insurance satisfactory to the Owner for material stored off the project site in an amount not less than the total value thereof.

b. The consent of any surety shall be obtained to the extent required prior to payment for any materials stored off the project site.

Copyright © 2002 National Society of Professional Engineers for EJCDC. All rights reserved.

B. *Review of Applications*

1. Engineer will, within 10 days after receipt of each Application for Payment, either indicate in writing a recommendation of payment and present the Application to Owner or return the Application to Contractor indicating in writing Engineer's reasons for refusing to recommend payment. In the latter case, Contractor may make the necessary corrections and resubmit the Application.

2. Engineer's recommendation of any payment requested in an Application for Payment will constitute a representation by Engineer to Owner, based on Engineer's observations on the Site of the executed Work as an experienced and qualified design professional and on Engineer's review of the Application for Payment and the accompanying data and schedules, that to the best of Engineer's knowledge, information and belief:

a. the Work has progressed to the point indicated;

b. the quality of the Work is generally in accordance with the Contract Documents (subject to an evaluation of the Work as a functioning whole prior to or upon Substantial Completion, to the results of any subsequent tests called for in the Contract Documents, to a final determination of quantities and classifications for Unit Price Work under Paragraph 9.07, and to any other qualifications stated in the recommendation); and

c. the conditions precedent to Contractor's being entitled to such payment appear to have been fulfilled in so far as it is Engineer's responsibility to observe the Work.

3. By recommending any such payment Engineer will not thereby be deemed to have represented that:

a. inspections made to check the quality or the quantity of the Work as it has been performed have been exhaustive, extended to every aspect of the Work in progress, or involved detailed inspections of the Work beyond the responsibilities specifically assigned to Engineer in the Contract Documents; or

b. that there may not be other matters or issues between the parties that might entitle Contractor to be paid additionally by Owner or entitle Owner to withhold payment to Contractor.

4. Neither Engineer's review of Contractor's Work for the purposes of recommending payments nor Engineer's recommendation of any payment, including final payment, will impose responsibility on Engineer:

a. to supervise, direct, or control the Work, or

b. for the means, methods, techniques, sequences, or procedures of construction, or the safety precautions and programs incident thereto, or

c. for Contractor's failure to comply with Laws and Regulations applicable to Contractor's performance of the Work, or

d. to make any examination to ascertain how or for what purposes Contractor has used the moneys paid on account of the Contract Price, or

e. to determine that title to any of the Work, materials, or equipment has passed to Owner free and clear of any Liens.

5. Engineer may refuse to recommend the whole or any part of any payment if, in Engineer's opinion, it would be incorrect to make the representations to Owner stated in Paragraph 14.02.B.2. Engineer may also refuse to recommend any such payment or, because of subsequently discovered evidence or the results of subsequent inspections or tests, revise or revoke any such payment recommendation previously made, to such extent as may be necessary in Engineer's opinion to protect Owner from loss because:

a. the Work is defective, or completed Work has been damaged, requiring correction or replacement;

b. the Contract Price has been reduced by Change Orders;

c. Owner has been required to correct defective Work or complete Work in accordance with Paragraph 13.09; or

d. Engineer has actual knowledge of the occurrence of any of the events enumerated in Paragraph 15.02.A.

C. *Payment Becomes Due*

1. Ten days after presentation of the Application for Payment to Owner with Engineer's recommendation, the amount recommended will (subject to the provisions of Paragraph 14.02.D) become due, and when due will be paid by Owner to Contractor.

D. *Reduction in Payment*

1. Owner may refuse to make payment of the full amount recommended by Engineer because:

a. claims have been made against Owner on account of Contractor's performance or furnishing of the Work;

b. Liens have been filed in connection with the Work, except where Contractor has delivered a specific

Copyright © 2002 National Society of Professional Engineers for EJCDC. All rights reserved.

bond satisfactory to Owner to secure the satisfaction and discharge of such Liens;

c. there are other items entitling Owner to a set-off against the amount recommended;

d. Owner has actual knowledge of the occurrence of any of the events enumerated in Paragraphs 14.02.B.5.a through 14.02.B.5.c or Paragraph 15.02.A;

e. reasonable evidence that the Work cannot be completed for the unpaid balance of the Contract Amount;

f. damage to the Owner or another contractor;

g. reasonable evidence that the Work will not be completed within the Contract Time, and that the unpaid balance would not be adequate to cover actual or liquidated damages for the anticipated delay;

h. failure of the Contractor to submit a schedule of values in accordance with the Contract Documents;

i. failure of the Contractor to submit a submittal schedule in accordance with the Contract Documents;

j. failure of the Contractor to submit or update construction schedules, including Progress Schedule(s), in accordance with the Contract Documents;

k. failure of the Contractor to maintain a Record Documents;

l. failure of the Contractor to maintain weekly payroll reports;

m. failure of the Contractor to submit monthly Subcontractor reports;

n. the Contractor's neglect or unsatisfactory prosecution of the Work, including failure to clean up;

o. assessment of fines and/or penalties for violations of any federal or state law;

p. notice of potential claims by subcontractors or suppliers; or

q. failure of the Contractor to comply with any provision of the Contract Documents.

2. If Owner refuses to make payment of the full amount recommended by Engineer, Owner will give Contractor immediate written notice (with a copy to Engineer) stating the reasons for such action and promptly pay Contractor any amount remaining after deduction of the amount so withheld. Owner shall promptly pay Contractor the amount so withheld, or any adjustment thereto agreed to by Owner and Contractor, when Contractor corrects to Owner's satisfaction the reasons for such action.

3. If it is subsequently determined that Owner's refusal of payment was not justified, the amount wrongfully withheld shall be treated as an amount due as determined by Paragraph 14.02.C.1.

E. No money shall be paid by the Owner upon any claim, debt, demand or account whatsoever, to any person, firm or corporation who is in arrears to the City of Georgetown for taxes; and the City of Georgetown shall be entitled to counterclaim and offset against any such debt, claim, demand or account in the amount of taxes so in arrears and no assignment or transfer of such debt, claim, demand or account after said taxes are due, shall affect the right of the Owner to so offset said taxes, and associated penalties and interest if applicable, against the same.

14.03 *Contractor's Warranty of Title*

A. Contractor warrants and guarantees that title to all Work, materials, and equipment covered by any Application for Payment, whether incorporated in the Project or not, will pass to Owner no later than the time of payment free and clear of all Liens.

(1) The Contractor further expressly undertakes to defend the Owner and Engineer, at the Contractor's sole expense, against any actions, lawsuits, or proceedings brought against the Owner, Engineer, or any third party as a result of liens filed against the Work, the site of any of the Work, the project site and any improvements thereon, payments due the Contractor, or any portion of the property of the Owner, Engineer, or third party. The Contractor hereby agrees to indemnify and hold the Owner, Engineer, and third parties harmless against any such liens or claims of lien and agrees to pay any judgment or lien resulting from any such action, lawsuit, or proceeding.

(2) The Owner shall release any payments withheld due to a lien or claim of lien if the Contractor obtains security acceptable to the Owner or a lien bond that is (i) issued by a surety acceptable to the Owner; (ii) in a form and substance satisfactory to the Owner; and (iii) in an amount not less than two hundred percent (200%) of such lien claim. By posting a lien bond or other acceptable security, however, the Contractor shall not be relieved of any responsibilities or obligations under this paragraph, including, without limitation, the duty to defend and indemnify the Owner and Engineer. The cost of any premiums incurred in connection with such bonds and securities shall be the responsibility of the Contractor and shall not be part of, or cause any adjustment to, the Contract Price.

(3) The Contractor agrees to waive any right that it may have to assert a mechanic's or other lien against the project site and any improvements thereon, including without limitation, the Work itself. Furthermore, the Contractor will cause a similar provision, waiving all rights to a mechanic's or other lien against the property,

Copyright © 2002 National Society of Professional Engineers for EJCDC. All rights reserved.

to be included in all of its subcontracts, any sub-subcontracts, and all contracts with material suppliers.

(4) Notwithstanding the foregoing, the Owner reserves the right to settle any disputed mechanic's or material supplier's lien claim by payment to the lien claimant or by such other means as the Owner, in the Owner's sole discretion, determines is the most economical or advantageous method of settling the dispute. The Contractor shall promptly reimburse the Owner, upon demand, for any payment so made.

14.04 *Substantial Completion*

A. When Contractor considers the entire Work ready for its intended use Contractor shall notify Owner and Engineer in writing that the entire Work is substantially complete (except for items specifically listed by Contractor as incomplete) and request that Engineer issue a certificate of Substantial Completion.

B. Promptly after Contractor's notification, , Owner, Contractor, and Engineer shall make an inspection of the Work to determine the status of completion. If Engineer does not consider the Work substantially complete, Engineer will notify Contractor in writing giving the reasons therefor.

C. If Engineer considers the Work substantially complete, Engineer will deliver to Owner a tentative certificate of Substantial Completion which shall fix the date of Substantial Completion. There shall be attached to the certificate a tentative list of items to be completed or corrected before final payment. Owner shall have seven days after receipt of the tentative certificate during which to make written objection to Engineer as to any provisions of the certificate or attached list. If, after considering such objections, Engineer concludes that the Work is not substantially complete, Engineer will within 14 days after submission of the tentative certificate to Owner notify Contractor in writing, stating the reasons therefor. If, after consideration of Owner's objections, Engineer considers the Work substantially complete, Engineer will within said 14 days execute and deliver to Owner and Contractor a definitive certificate of Substantial Completion (with a revised tentative list of items to be completed or corrected) reflecting such changes from the tentative certificate as Engineer believes justified after consideration of any objections from Owner.

D. At the time of delivery of the tentative certificate of Substantial Completion, Engineer will deliver to Owner and Contractor a written recommendation as to division of responsibilities pending final payment between Owner and Contractor with respect to security, operation, safety, and protection of the Work, maintenance, heat, utilities, insurance, and warranties and guarantees. Unless Owner and Contractor agree otherwise in writing and so inform Engineer in writing prior to Engineer's issuing the definitive certificate of Substantial Completion, Engineer's aforesaid recommendation will be binding on Owner and Contractor until final payment.

E. Owner shall have the right to exclude Contractor from the Site after the date of Substantial Completion subject to allowing Contractor reasonable access to complete or correct items on the tentative list.

14.05 *Partial Utilization*

A. Prior to Substantial Completion of all the Work, Owner may use or occupy any substantially completed part of the Work which has specifically been identified in the Contract Documents, or which Owner, Engineer, and Contractor agree constitutes a separately functioning and usable part of the Work that can be used by Owner for its intended purpose without significant interference with Contractor's performance of the remainder of the Work, subject to the following conditions.

1. Owner at any time may request Contractor in writing to permit Owner to use or occupy any such part of the Work which Owner believes to be ready for its intended use and substantially complete. If and when Contractor agrees that such part of the Work is substantially complete, Contractor will certify to Owner and Engineer that such part of the Work is substantially complete and request Engineer to issue a certificate of Substantial Completion for that part of the Work.

2. Contractor at any time may notify Owner and Engineer in writing that Contractor considers any such part of the Work ready for its intended use and substantially complete and request Engineer to issue a certificate of Substantial Completion for that part of the Work.

3. Within a reasonable time after either such request, Owner, Contractor, and Engineer shall make an inspection of that part of the Work to determine its status of completion. If Engineer does not consider that part of the Work to be substantially complete, Engineer will notify Owner and Contractor in writing giving the reasons therefor. If Engineer considers that part of the Work to be substantially complete, the provisions of Paragraph 14.04 will apply with respect to certification of Substantial Completion of that part of the Work and the division of responsibility in respect thereof and access thereto.

4. No use or occupancy or separate operation of part of the Work may occur prior to compliance with the requirements of Paragraph 5.10 regarding property insurance.

14.06 *Final Inspection*

A. Upon written notice from Contractor that the entire Work or an agreed portion thereof is complete, Engineer will promptly make a final inspection with Owner and Contractor and will notify Contractor in writing of all particulars in which this inspection reveals

Copyright © 2002 National Society of Professional Engineers for EJCDC. All rights reserved.

that the Work is incomplete or defective. Contractor shall immediately take such measures as are necessary to complete such Work or remedy such deficiencies.

14.07 *Final Payment*

A. Application for Payment

1. After Contractor has, in the opinion of Engineer, satisfactorily completed all corrections identified during the final inspection and has delivered, in accordance with the Contract Documents, all maintenance and operating instructions, schedules, guarantees, bonds, certificates or other evidence of insurance certificates of inspection, marked-up record documents (as provided in Paragraph 6.12), and other documents, Contractor may make application for final payment following the procedure for progress payments.

2. The final Application for Payment shall be accompanied (except as previously delivered) by:

a. all documentation called for in the Contract Documents, including but not limited to the evidence of insurance required by Paragraph 5.04.B.7;

b. consent of the surety, if any, to final payment;

c. a list of all Claims against Owner that Contractor believes are unsettled; and

d. complete and legally effective releases or waivers (satisfactory to Owner) of all Lien rights arising out of or Liens filed in connection with the Work.

e. Non-Use of Asbestos Affidavit (After Construction);

f. Affidavit that all payrolls, bills for materials and equipment, subcontracted Work, and all indebtedness connected with the Work, except as specifically noted, are paid or will be paid, or will be otherwise satisfied within the period of time required by Chapter 2251 of the Texas Government Code. Contractor's affidavit shall include documentation establishing payment or satisfaction of all such obligations such as receipts, releases, and waivers of claims and liens arising out of the Contract. The Contractor may not subsequently submit a claim on behalf of a subcontractor or vendor unless the Contractor's affidavit notes that claim as an exception; and

g. Other data establishing payment or satisfaction of obligations, such as receipts, releases and waivers of liens, claims, security interests or encumbrances arising out of the Contract, to the extent and in such form as may be designated by the Owner.

3. In lieu of the releases or waivers of Liens specified in Paragraph 14.07.A.2 and as approved by Owner, Contractor may furnish receipts or releases in full and an affidavit of Contractor that: (i) the releases and receipts include all labor, services, material, and equipment for which a Lien could be filed; and (ii) all payrolls, material and equipment bills, and other indebtedness connected with the Work for which Owner or Owner's property might in any way be responsible have been paid or otherwise satisfied. If any Subcontractor or Supplier fails to furnish such a release or receipt in full, Contractor may furnish a bond or other collateral satisfactory to Owner to indemnify Owner against any Lien.

B. Engineer's Review of Application and Acceptance

1. If, on the basis of Owner's and Engineer's observation of the Work during construction and final inspection, and Owner's and Engineer's review of the final Application for Payment and accompanying documentation as required by the Contract Documents, Owner and Engineer are satisfied that the Work has been completed and Contractor's other obligations under the Contract Documents have been fulfilled, Engineer will, within ten days after receipt of the final Application for Payment, indicate in writing Engineer's recommendation of payment and present the Application for Payment to Owner for payment. At the same time Engineer will also give written notice to Owner and Contractor that the Work is acceptable subject to the provisions of Paragraph 14.09. Otherwise, Engineer will return the Application for Payment to Contractor, indicating in writing the reasons for refusing to recommend final payment, in which case Contractor shall make the necessary corrections and resubmit the Application for Payment.

C. Payment Becomes Due

1. Thirty days after the presentation to Owner of the Application for Payment and accompanying documentation, the amount recommended by Engineer, less any sum Owner is entitled to set off against Engineer's recommendation, including but not limited to liquidated damages, will become due and, will be paid by Owner to Contractor.

14.08 *Final Completion Delayed*

A. If, through no fault of Contractor, final completion of the Work is significantly delayed, and if Engineer so confirms, Owner shall, upon receipt of Contractor's final Application for Payment (for Work fully completed and accepted) and recommendation of Engineer, and without terminating the Contract, make payment of the balance due for that portion of the Work fully completed and accepted. If the remaining balance to be held by Owner for Work not fully completed or corrected is less than the retainage stipulated in the Agreement, and if bonds have been furnished as required in Paragraph 5.01, the written consent of the surety to the payment of the balance due for that portion of the Work fully completed and accepted shall be submitted by Contractor to Engineer with the Application for such

Copyright © 2002 National Society of Professional Engineers for EJCDC. All rights reserved.

payment. Such payment shall be made under the terms and conditions governing final payment, except that it shall not constitute a waiver of Claims.

14.09 *Waiver of Claims*

A. The making and acceptance of final payment will constitute:

1. a waiver of all Claims by Owner against Contractor, except Claims arising from unsettled Liens, from defective Work appearing after final inspection pursuant to Paragraph 14.06, from failure to comply with the Contract Documents or the terms of any special guarantees specified therein, or from Contractor's continuing obligations under the Contract Documents; and

2. a waiver of all Claims by Contractor against Owner other than those previously made in accordance with the requirements herein and expressly acknowledged by Owner in writing as still unsettled.

ARTICLE 15 - SUSPENSION OF WORK AND TERMINATION

15.01 *Owner May Suspend Work*

A. At any time and without cause, Owner may suspend the Work or any portion thereof for a period of not more than 90 consecutive days by notice in writing to Contractor and Engineer which will fix the date on which Work will be resumed. Contractor shall resume the Work on the date so fixed. Contractor shall be granted an adjustment in the Contract Price or an extension of the Contract Times, or both, directly attributable to any such suspension if Contractor makes a Claim therefor as provided in Paragraph 10.05.

15.02 *Owner May Terminate for Cause*

A. The occurrence of any one or more of the following events will justify termination for cause:

1. Contractor's persistent failure to perform the Work in accordance with the Contract Documents (including, but not limited to, failure to supply sufficient skilled workers or suitable materials or equipment or failure to adhere to the Progress Schedule established under Paragraph 2.07 as adjusted from time to time pursuant to Paragraph 6.04);

2. Contractor's disregard of Laws or Regulations of any public body having jurisdiction;

3. Contractor's disregard of the authority of Engineer; or

4. Persistent failure to prosecute the Work in accordance with the Contract, and to insure its completion within the time, or any approved extension thereof, specified in this Contract; and/or

5. Failure to remedy defective Work condemned by the Owner; and/or

6. Failure to pay subcontractors, laborers, and material suppliers pursuant to Tex. Gov't Code Chapter 2251; and/or

7. Persistent endangerment to the safety of labor or of the Work; and/or

8. Failure to supply or maintain statutory bonds or to maintain required insurance, pursuant to the contract; and/or

9. If the CONTRACTOR is adjudged a bankrupt, or makes a general assignment for the benefit of creditors, or if a receiver is appointed for the benefit of creditors, or if a receiver is appointed on account of CONTRACTOR's insolvency, or if CONTRACTOR has otherwise demonstrated financial inability to perform the Work; and/or

10. Contractor's violation in any substantial way of any provisions of the Contract Documents.

B. If one or more of the events identified in Paragraph 15.02.A occur, Owner may, after giving Contractor (and surety) seven days written notice of its intent to terminate the services of Contractor:

1. exclude Contractor from the Site, and take possession of the Work and of all Contractor's tools, appliances, construction equipment, and machinery at the Site, and use the same to the full extent they could be used by Contractor (without liability to Contractor for trespass or conversion),

2. incorporate in the Work all materials and equipment stored at the Site or for which Owner has paid Contractor but which are stored elsewhere, and

3. complete the Work as Owner may deem expedient.

C. If Owner proceeds as provided in Paragraph 15.02.B, Contractor shall not be entitled to receive any further payment until the Work is completed. If the unpaid balance of the Contract Price exceeds all claims, costs, losses, and damages (including but not limited to all fees and charges of engineers, architects, attorneys, and other professionals and all court or arbitration or other dispute resolution costs) sustained by Owner arising out of or relating to completing the Work, such excess will be

Copyright © 2002 National Society of Professional Engineers for EJCDC. All rights reserved.

paid to Contractor. If such claims, costs, losses, and damages exceed such unpaid balance, Contractor shall pay the difference to Owner. Such claims, costs, losses, and damages incurred by Owner will be reviewed by Engineer as to their reasonableness and, when so approved by Engineer, incorporated in a Change Order. When exercising any rights or remedies under this Paragraph Owner shall not be required to obtain the lowest price for the Work performed.

D. Notwithstanding Paragraphs 15.02.B and 15.02.C, Contractor's services will not be terminated if Contractor begins within seven days of receipt of notice of intent to terminate to correct its failure to perform and proceeds diligently to cure such failure within no more than 30 days of receipt of said notice.

E. Where Contractor's services have been so terminated by Owner, the termination will not affect any rights or remedies of Owner against Contractor then existing or which may thereafter accrue. Any retention or payment of moneys due Contractor by Owner will not release Contractor from liability.

F. If and to the extent that Contractor has provided a performance bond under the provisions of Paragraph 5.01.A, the termination procedures of that bond shall supersede the provisions of Paragraphs 15.02.B, and 15.02.C.

G. In the event that Owner's termination under Paragraph 15.02 is determined to be wrongful, the termination will automatically become a termination for convenience under Paragraph 15.03, and Contractor's remedy for wrongful termination shall be limited to recovery of payments permitted for termination for convenience under paragraph 15.03.

15.03 *Owner May Terminate For Convenience*

A. The Owner may, at any time, terminate the Contract in whole or in part for the Owner's convenience and without cause. Termination by the Owner under this paragraph shall be by a notice of termination delivered to the Contractor specifying the extent of termination and the effective date.

B. Upon receipt of a notice of termination for convenience, the Contractor shall immediately, in accordance with instructions from the Owner, proceed with performance of the following duties regardless of delay in determining or adjusting amounts due under this paragraph:

1. cease operations as specified in the notice;

2. place no further orders and enter into no further subcontracts for materials, labor, service, or facilities except as necessary to complete continued portions of the Contract;

3. terminate all subcontracts and orders to the extent they relate to the Work terminated;

4. proceed to complete the performance of the Work not terminated; and

5. take actions that may be necessary, or that the Owner may direct, for the protection and preservation of the terminated Work.

C. Upon such termination, the Contractor shall recover as its sole remedy payment of the percentage of the Contract Price equal to the percentage of the Work performed satisfactorily and not previously paid for as determined by the Engineer. The Contractor hereby waives and forfeits all other claims for payment and damages, including, without limitation, anticipated profits or revenue or other economic loss arising out of or resulting from such termination.

D. The Owner shall be credited for (1) payments previously made to the Contractor for the terminated portion of the Work; (2) claims that the Owner has against the Contractor under the Contract; and (3) the value of the materials, supplies, equipment, or other items that are to be disposed of by the Contractor that are part of the Contract Price.

ARTICLE 16 - DISPUTE RESOLUTION

16.01 *Methods and Procedures*

A. Claims shall be made by Written Notice delivered by the party making the Claim to the other party within thirty (30) calendar days after the start of the occurrence or event giving rise to the Claim and stating the general nature of the Claim. Notice of the amount of the Claim with supporting data shall be delivered within thirty (30) calendar days after Written Notice of Claim is delivered by claimant and shall represent that the adjustment claimed covers all known amounts to which claimant is entitled.

B. Within thirty (30) calendar days of receipt of notice of the amount of the Claim with supporting data, Owner and the Contractor shall meet to discuss the Claim, after which an offer of settlement or notification of no settlement offer will be made to claimant. If claimant is not satisfied with the proposal presented, claimant shall have thirty (30) calendar days in which to:

.1 submit additional supporting data requested by the other party;

.2 modify the initial Claim; or

.3 request Alternative Dispute Resolution.

16.02 *Alternative Dispute Resolution*

Copyright © 2002 National Society of Professional Engineers for EJCDC. All rights reserved.

A. If a dispute exists concerning a Claim, the parties agree to use the following procedure prior to pursuing any other available remedies. The Owner reserves the right to include Engineer as a party.

B. Either party may give the other party written notification of any dispute not resolved in the normal course of business. Within fifteen (15) days after delivery of the notice, the receiving party shall submit to the other party a written response. The notice and response shall include (a) a statement of that party's position and a summary of arguments supporting that position, and (b) the name and title of the executive who will represent that party and of any other person will accompany that executive.

C. Within thirty (30) days after delivery of the initial notice, the executives of both parties shall meet in Georgetown, Texas at a mutually acceptable time and location, and thereafter as often as they deem reasonably necessary to attempt to resolve the dispute.

D. All reasonable requests for information made by one party to the other will be honored.

E. All negotiations are confidential and shall be treated as compromise and settlement negotiations for purpose of applicable rules of evidence.

F. Each party is required to continue to perform its obligations under the Contract Documents pending final resolution of any dispute arising out of or relating to the Contract Documents.

16.03 *Mediation*

A. If the procedure described in Paragraph 16.02 proves unsuccessful or is waived pursuant to its terms, the parties shall initiate the mediation process, as follows:

B. Any Claim arising out of or related to the Contract, shall be subject to mediation as a condition precedent to the institution of legal or equitable proceedings by either party.

C. The parties shall endeavor to resolve their Claims by mediation. Request for mediation shall be filed in writing with the other party. The request may be made concurrently with the filing of a lawsuit but, in such event, mediation shall proceed in advance of legal or equitable proceedings, which shall be stayed pending mediation for a period of 60 days from the date of filing, unless stayed for a longer period by agreement of the parties or court order.

D. The parties shall share the mediator's fee and any filing fees equally. The mediation shall be held in Georgetown, Texas, unless another location is mutually agreed upon. Agreements reached in mediation shall be enforceable as settlement agreements in any court having jurisdiction thereof.

J. Claims not resolved by mediation shall be decided by litigation. Venue shall be proper only in Williamson County, Texas.

ARTICLE 17 - MISCELLANEOUS

17.01 *Giving Notice*

A. Whenever any provision of the Contract Documents requires the giving of written notice, it will be deemed to have been validly given if:

1. delivered in person to the individual or to a member of the firm or to an officer of the corporation for whom it is intended, or

2. delivered at or sent by registered or certified mail, postage prepaid, to the last business address known to the giver of the notice.

17.02 *Computation of Times*

A. When any period of time is referred to in the Contract Documents by days, it will be computed to exclude the first and include the last day of such period. If the last day of any such period falls on a Saturday or Sunday or on a day made a legal holiday by the law of the applicable jurisdiction, such day will be omitted from the computation.

B. The following legal holidays are observed by the Owner:

Holiday	*Date Observed*
New Year's Day	January 1
Martin Luther King, Jr.'s Birthday	Third Monday in January
Memorial Day	Last Monday in May
Independence Day	July 4
Labor Day	First Monday in September
Thanksgiving Day	Fourth Thursday in November
Friday after Thanksgiving	Friday after Thanksgiving
Christmas Eve	December 24
Christmas Day	December 25

Copyright © 2002 National Society of Professional Engineers for EJCDC. All rights reserved.

C. If a Legal Holiday falls on Saturday, it will be observed on the preceding Friday. If a Legal Holiday falls on Sunday, it will be observed on the following Monday. If Christmas Eve falls on a Saturday or a Sunday, the preceding Friday is observed as the Christmas Eve holiday. If Christmas Day falls on a Saturday or a Sunday, the following Monday is observed as the Christmas Day holiday.

17.03 *Cumulative Remedies*

A. The duties and obligations imposed by these General Conditions and the rights and remedies available hereunder to the parties hereto are in addition to, and are not to be construed in any way as a limitation of, any rights and remedies available to any or all of them which are otherwise imposed or available by Laws or Regulations, by special warranty or guarantee, or by other provisions of the Contract Documents. The provisions of this Paragraph will be as effective as if repeated specifically in the Contract Documents in connection with each particular duty, obligation, right, and remedy to which they apply.

B. The Contractor and Owner waive all Claims against each other for consequential damages arising out of or relating to this Contract; provided, however, that in no event shall this mutual waiver be deemed to preclude an award of liquidated damages recoverable under the Agreement. This mutual waiver is applicable, without limitation, to all consequential damages due to either party's termination in accordance with this Contract.

17.04 *Survival of Obligations*

A. All representations, indemnifications, warranties, and guarantees made in, required by, or given in accordance with the Contract Documents, as well as all continuing obligations indicated in the Contract Documents, will survive final payment, completion, and acceptance of the Work or termination or completion of the Contract or termination of the services of Contractor.

17.05 *Controlling Law*

A. This Contract is to be governed by the law of the State of Texas.

17.06 *Headings*

A. Article and paragraph headings are inserted for convenience only and do not constitute parts of these General Conditions.

Copyright © 2002 National Society of Professional Engineers for EJCDC. All rights reserved.

THIS PAGE INTENTIONALLY LEFT BLANK.

SECTION 00800

SUPPLEMENTARY CONDITIONS

GENERAL

These Supplementary Conditions amend or supplement the Standard General Conditions of the Construction Contract and other provisions of the Contract Documents as indicated below. All provisions which are not so amended or supplemented remain in full force and effect.

The terms used in these Supplementary Conditions will have the meanings indicated in the General Conditions. Additional terms used in these Supplementary Conditions have the meanings indicated below, which are applicable to both the singular and plural thereof.

SC-1.01 DEFINED TERMS

Add the following defined terms to Section 1.01:

53 *Calendar Day*: "Calendar Day" is any day of the week or month, no days being excepted.

54 *Working Day*: A "Working Day" is defined as any day not including Saturdays, Sundays or any legal holidays, in which weather or other conditions, not under the control of the CONTRACTOR, will permit construction of the principal units of the work for a period of not less than seven (7) hours between 7:00 a.m. and 6:00 p.m.

55 *Working Times*: Times of day(s) during which work may be performed. Unless authorized by the City of Georgetown, all Work shall be performed between 7:00am and 6:00pm on weekdays and, if previously authorized by as provided for in Section 6.02 herein, as applicable, between 9:00 am and 6:00 pm on Saturdays, Sundays, or Legal Holidays. When the CONTRACTOR has been authorized to perform Work during hours outside Working Times, such hours shall be considered time worked on Working days. Notwithstanding the preceding, emergency work may be done without prior permission only as provided in paragraph 6.16 herein.

56 *Proposal:* Proposal of Offeror, under Local Government Code section 271.113 providing for alternative project delivery methods, on prescribed forms setting forth prices for performing the Work described in the Contract Documents.

57 *Proposal Documents*: The advertisement or invitation for Proposals, Instruction to Offerors, the Proposal form, the Contract Documents and Addenda (NOTE: this definition only applies where proposals, rather than bids have been solicited and where allowed under the Local Government Code).

SC-4.01 AVAILABILITY OF LANDS

Add the following defined terms to Section 4.01:

D. The Site for this project shall include the temporary and permanent easements as indicated on the Drawings.

SC-4.02 SUBSURFACE AND PHYSICAL CONDITIONS

Add the following paragraph immediately after paragraph 4.02.B:

C. In the preparation of the Contract Documents ENGINEER relied upon the following reports of explorations and tests of subsurface conditions at the Site:

1. Geotechnical information including bore logs are presented in "City of Georgetown South Lake Water Treatment Plant to South Fork Interceptor Wastewater Improvements – Geotechnical Engineering Report" prepared by Terracon Consultants, Inc., Austin, Texas dated November 6, 2023.

2. Copies of the report listed in SC-4.02.C.1 that are not included with the Bidding Documents may be examined at the offices of ENGINEER during regular business hours, or may be obtained from the ENGINEER. This report is not part of the Contract Documents, but the "technical data" contained therein upon which CONTRACTOR may rely is attached to Section CIP4. CONTRACTOR is not entitled to rely upon other information and data utilized by ENGINEER in the preparation of Drawings and Specifications.

3. CONTRACTOR represents that he has satisfied himself as to the subsurface conditions at the Site of the Work. The Contract Documents, including subsurface conditions, but excluding the "technical data" referenced in SC-4.02.C.2 above, are for information purposes only and are not warranted or represented in any manner to accurately show the conditions at the Site of the Work. All risks of differing site conditions shall be borne solely by the CONTRACTOR.

SC-5.02 LICENSED SURETIES AND INSURERS

Add the following to Section 5.02 A:

Surety and insurance companies from which the bonds and insurance for this Project are purchased shall have a Best's rating of no less than A:VII, in addition to other requirements specified herein.

SC-5.04 CONTRACTOR'S LIABILITY INSURANCE

Add the following to Section 5.04.B.1:

Include the following parties or entities as additional insured:

CDM Smith Inc.
8310-1 N Capital of Texas Hwy., Suite 250
Austin, Texas 78731

SC-5.04 Contractor's Liability Insurance

Replace Paragraph 5.04 with the following SC-5.04

5.04 *Other Requirements: Bond and Insurance.*

A. General Requirements:

1. CONTRACTOR shall purchase and maintain insurance in the types and amounts indicated below for the duration of the Contract (unless a longer duration is specified), which shall include items owned by OWNER in the care, custody and control of CONTRACTOR prior to and during the term of the Contract and all warranty periods. Failure to purchase and maintain the required insurance shall be grounds for Termination of the Contract or Suspension of the Work by OWNER. Except for the Worker's Compensation policy, the other insurance policies required by the Contract to be obtained by CONTRACTOR must state that OWNER, its officials, directors, employees, representatives, and volunteers are added as additional insureds with regard to operations and activities by or on behalf of the named insureds performed under contract with OWNER. The additional insured status must cover completed operations as well, and the policy covering completed work must remain in effect until the expiration of the statue of repose.

2. CONTRACTOR must complete and forward the required Certificates of Insurance to OWNER before the Contract is executed as verification of coverage required below. CONTRACTOR shall not commence Work until the required insurance is obtained and until such insurance has been reviewed by OWNER. Approval of insurance by OWNER shall not relieve or decrease the liability of CONTRACTOR hereunder and shall not be construed to be a limitation of liability on the part of CONTRACTOR. CONTRACTOR must also complete and forward the required Certificates of Insurance to OWNER whenever a previously identified policy period has expired as verification of continuing coverage.

3. Contractor's insurance coverage is to be written by companies licensed to do business in the State of Texas at the time the policies are issued and shall be written by companies with A.M. Best ratings of B+VII or better, except for hazardous material insurance which shall be written by companies with A.M. Best ratings of A- or better.

4. All endorsements naming the OWNER as additional insured, waivers, and notices of cancellation endorsements as well as the Certificate of Insurance shall indicate: City of Georgetown, 808 Martin Luther King, Jr. Street, Georgetown, Texas 78626, ATTN: Contract Manager.

5. The "other" insurance clause shall not apply to the OWNER where the OWNER is an additional insured shown on any policy. It is agreed that the CONTRACTOR's insurance shall be considered primary with respect to any insurance or self insurance carried by OWNER. The CONTRACTOR'S insurance shall apply separately to each insured against whom a claim is made and/or lawsuits brought, except with respect to the limits of insurer's liability.

6. If insurance policies are not written for amounts specified below, CONTRACTOR shall carry Umbrella or Excess Liability Insurance for any differences in amounts specified. If Excess Liability Insurance is provided, it shall follow the form of the primary coverage.

7. OWNER shall be entitled, upon request and without expense, to receive certified copies of policies and endorsements thereto and may make any reasonable requests for deletion or revision or modification of particular policy terms, conditions, limitations, or exclusions except where policy provisions are established by law or regulations binding upon either of the parties hereto or the underwriter on any such policies.

8. OWNER reserves the right to review the insurance requirements set forth during the effective period of this Contract and to make reasonable adjustments to insurance coverage, limits, and exclusions when deemed necessary and prudent by OWNER based upon changes in statutory law, court decisions, the claims history of the industry or financial condition of the insurance company as well as CONTRACTOR.

9. CONTRACTOR shall not cause any insurance to be canceled nor permit any insurance to lapse during the term of the Contract or as required in the Contract.

10. CONTRACTOR shall be responsible for premiums, deductibles and self-insured retentions, if any, stated in policies. All deductibles or self-insured retentions shall be disclosed on the Certificate of Insurance.

11. The policies must contain the following language: "This policy shall not be cancelled, materially changed, or not renewed until after thirty (30) days prior written notice has been given to OWNER." In addition, CONTRACTOR shall provide OWNER thirty (30) days written notice of erosion of the aggregate limits below occurrence limits for all applicable coverages indicted within the Contract.

12. If OWNER-owned property is being transported or stored off-Site by CONTRACTOR, then the appropriate property policy will be endorsed for transit and storage in an amount sufficient to protect OWNER's property.

13. The insurance coverages required under this contract are required minimums and are not intended to limit the responsibility or liability of CONTRACTOR.

14. Without limiting any of the other obligations or liabilities of the CONTRACTOR, the CONTRACTOR shall require each Subcontractor performing work under the Contract, at the Subcontractor's own expense, to maintain during the term of the Contract, the same stipulated minimum insurance including the required provisions and additional policy conditions as shown above. As an alternative, the CONTRACTOR may include its Subcontractors as additional insureds on its own coverage as prescribed under these requirements. The CONTRACTOR's certificate of insurance shall note in such event that the Subcontractors are included as additional insureds and that CONTRACTOR agrees to provide Workers' Compensation for the Subcontractors and their employees. The CONTRACTOR shall obtain and monitor the certificates of insurance from each Subcontractor in order to assure compliance with the

insurance requirements. The CONTRACTOR must retain the certificates of insurance for the duration of the Contract plus 5 years and shall have the responsibility of enforcing these insurance requirements among its subcontractors. The OWNER shall be entitled, upon request and without expense, to receive copies of these certificates.

B. Business Automobile Liability Insurance. Provide coverage for all owned, non-owned and hired vehicles in an amount not less than $1,000,000 combined single limit per accident for bodily injury and property damage. The policy shall contain the following endorsements in favor of OWNER:

Waiver of Subrogation endorsement TE 2046A;

30 day Notice of Cancellation endorsement TE 0202A; and

Additional Insured endorsement TE 9901 B.

Provide coverage in the following types and amounts:

A minimum combined bodily injury and property damage limit of $1,000,000 per occurrence. No aggregate shall be permitted for this type of coverage.

Such insurance shall include coverage for loading and unloading hazards.

C. Workers' Compensation and Employers' Liability Insurance. Coverage shall be consistent with statutory benefits outlined in the Texas Workers' Compensation Act (Section 401). CONTRACTOR shall assure compliance with this Statute by submitting two (2) copies of a standard certificate of coverage (e.g. ACCORD form) to Owner's Representative for every person providing services on the Project as acceptable proof of coverage. The required Certificate of Insurance must be presented as evidence of coverage for CONTRACTOR. Workers' Compensation Insurance coverage written by the Texas Workers Compensation Fund is acceptable to OWNER. CONTRACTOR's policy shall apply to the State of Texas and include these endorsements in favor of OWNER:

Waiver of Subrogation, form WC 420304; and

30 day Notice of Cancellation, form WC 420601.

The minimum policy limits for Employers' Liability Insurance coverage shall be the minimum amounts required to meet the statutory requirements of Texas Labor Code, Section 401.011(44), or the following, whichever is greater:

$1,000,000 bodily injury per accident, and

$1,000,000 bodily injury by disease policy limit; and

$1,000,000 bodily injury by disease each employee; and

$1,000,000 Employer's Liability.

D. Commercial General Liability Insurance. The Policy shall contain the following provisions:

Blanket contractual liability coverage for liability and indemnifications assumed under the Contract and all contracts relative to this Project.

Completed Operations/Products Liability until the end the statute of repose period.

Explosion, Collapse and Underground (X, C & U) coverage.

Independent Contractor's coverage.

Aggregate limits of insurance per project, endorsement CG 2503.

OWNER listed as an additional insured, endorsement CG 2010.

30 day notice of cancellation in favor of OWNER, endorsement CG 0205.

Waiver of Transfer of Recovery Against Others in favor of OWNER, endorsement CG 2404

fully insuring CONTRACTOR'S or Subcontractor's liability for bodily injury and property damages with a combined bodily injury (including death) and property damage minimum limit of:

$1,000,000 per occurrence

$2,000,000 general aggregate

$2,000,000 products and completed operations aggregate

Coverage shall be on an "occurrence" basis.

E. Property Floater. Contractor shall obtain and maintain Property Floater in an amount sufficient to cover the replacement value of materials on site.

F. Umbrella Liability Insurance. The CONTRACTOR shall obtain, pay for, and maintain umbrella liability insurance during the contract term, insuring the CONTRACTOR (or subcontractor) for an amount not less than $2,000,000 that provides coverage at least as broad and applies in excess of and follows the form of the primary liability coverages required in Article 5. The policy shall provide "drop down" coverage where underlying primary insurance coverages limits are insufficient or exhausted.

G. Asbestos Abatement Liability Insurance. If the Work or the Project involves asbestos containing materials, the CONTRACTOR shall obtain Asbestos Abatement Liability Insurance for liability arising from the encapsulation, removal, handling, storage, transportation, and disposal of asbestos containing

materials. The combined single limit for bodily injury and property damage shall be a minimum of $1,000,000 per occurrence. If claims made, the claims-made, the claims made form shall provide that the period of coverage shall be: Continuous coverage for the term of the Contract plus the warranty period of at least one (1) year, and an extended discovery period for a minimum of five (5) years, which shall begin at the end of the warranty period.

H. Completed Work Insurance.

SC-5.045 Bonds.

A. *General.*

1. Bonds, when required by the Contract or by Chapter 2253 of the Texas Government Code, shall be executed on forms furnished by or acceptable to OWNER. All bonds signed by an agent must be accompanied by a certified copy of such agent's authority to act.

2. If the surety on any bond furnished by CONTRACTOR is declared bankrupt or becomes insolvent or its right to do business is terminated in the State of Texas or it ceases to meet the requirements of the preceding paragraph, CONTRACTOR shall within ten (10) days thereafter substitute another bond and surety, both of which must be acceptable to OWNER.

3. When Performance Bonds and/or Payment Bonds are required, each shall be issued in an amount of one hundred percent (100%) of the Contract Amount as security for the faithful performance and/or payment of all CONTRACTOR's obligations under the Contract Documents. Performance Bonds and Payment Bonds shall be issued by a solvent surety company authorized to do business in the State of Texas, and shall meet any other requirements established by law or by OWNER pursuant to applicable law. Any surety duly authorized to do business in Texas may write Performance and Payment Bonds on a project without reinsurance to the limit of 10 percent of its capital and surplus. Such a surety must reinsure any obligations over 10 percent.

B. *Performance Bond.*

1. If the Contract Amount exceeds $100,000, CONTRACTOR shall furnish OWNER with a Performance Bond in the form set out by OWNER. The Performance Bond shall be effective for the Contract Time and through all warranty period(s).

2. If the Contract Amount exceeds $50,000 but is less than or equal to $100,000, CONTRACTOR shall furnish OWNER with a Performance Bond in the form set out by OWNER, unless the original Contract Time is 60 Calendar Days or less, in which case CONTRACTOR can agree to the following terms and conditions for payment in lieu of providing a Performance Bond: no money will be paid to CONTRACTOR until completion and acceptance of the Work by OWNER; CONTRACTOR shall be entitled to receive 95% of the Contract Amount following Final Completion, and the remaining 5% of the Contract Amount following the one year warranty period.

3. If the Contract Amount is less than or equal to $50,000, CONTRACTOR will not be required to furnish a Performance Bond.

4. If a Performance Bond is required to be furnished, it shall extend for the one year warranty period, or longer if the warranty periods are longer.

C. Payment Bond.

1. If the Contract Amount exceeds $50,000, CONTRACTOR shall furnish OWNER with a Payment Bond in the form set out by OWNER.

2. If the Contract Amount is less than or equal to $50,000, CONTRACTOR will not be required to furnish a Payment Bond; provided that no money will be paid to CONTRACTOR until completion and acceptance of the Work by OWNER.

D. Power of Attorney. Each bond shall be accompanied by a valid Power of-Attorney (issued by the surety company and attached, signed and sealed with the corporate embossed seal, to the bond) authorizing the attorney in fact who signs the bond to commit the company to the terms of the bond, and stating any limit in the amount for which the attorney can issue a single bond.

E. Bond Indemnification. The process of requiring and accepting bonds and making claims thereunder shall be conducted in compliance with Tex. Gov't Code, Chapter 2253. IF FOR ANY REASON A STATUTORY PAYMENT OR PERFORMANCE BOND IS NOT HONORED BY THE SURETY, THE CONTRACTOR SHALL FULLY INDEMNIFY AND HOLD THE OWNER HARMLESS OF AND FROM ANY COSTS, LOSSES, OBLIGATIONS OR LIABILITIES IT INCURS AS A RESULT.

F. Furnishing Bond Information. OWNER shall furnish certified copies of the payment bond and the related Contract to any qualified person seeking copies who complies with Tex. Gov't Code, §2253.026.

G. Claims on Payment Bonds. Claims on payment bonds must be sent directly to the CONTRACTOR and his surety in accordance with Tex. Gov't Code § 2253.041. All Payment Bond claimants are cautioned that no lien exists on the funds unpaid to the CONTRACTOR on such Contract, and that reliance on notices sent to the OWNER may result in loss of their rights against the CONTRACTOR and/or his surety. The OWNER is not responsible in any manner to a claimant for collection of unpaid bills, and accepts no such responsibility because of any representation by any agent or employee.

H. Payment Claims when Payment Bond is not required. The rights of Subcontractors regarding payment are governed by Tex. Prop. Code, §§53.231 – 53.239 when the value of the Contract between the OWNER and the CONTRACTOR is less than $25,000.00. These provisions set out the requirements for filing a valid lien on funds unpaid to the CONTRACTOR as of the time of filing the claim, actions necessary to release the lien and satisfaction of such claim.

I. Minimum Standards for Sureties. Sureties shall be listed on the US Department of the Treasury's Listing Approved Sureties stating companies holding Certificates of Authority as acceptable sureties on Federal Bonds and acceptable reinsuring companies (Department Circular 570).

SC-6.02 LABOR; WORKING HOURS

Add the following defined terms to Paragraph 6.02:

C. Regular Working Hours shall be between 7 am and until 30 minutes prior to sunset or 6 pm whichever is earlier, and, if previously authorized in writing by the City of Georgetown, between 9:00 am and 6:00 pm on Saturdays, Sundays, or Legal Holidays.

D. The Contractor shall work Regular Working Hours on normal Working Days as defined in Section 1.01.

Add the following provision on prevailing wages to Paragraph 6.02:

E. PREVAILING WAGE RATES: This Contract is subject to Government Code Chapter 2258 concerning payment of Prevailing Wage Rates. The OWNER will determine the general prevailing rates in accordance with Government Code Chapter 2258. The applicable provisions include, but are not limited to the following:

§ 2258.021. Right to be Paid Prevailing Wage Rates

(a) A worker employed on a public work by or on behalf of the state or a political subdivision of the state shall be paid:

(1) not less than the general prevailing rate of per diem wages for work of a similar character in the locality in which the work is performed; and

(2) not less than the general prevailing rate of per diem wages for legal holiday and overtime work.

(b) Subsection (a) does not apply to maintenance work.

(c) A worker is employed on a public work for the purposes of this section if the worker is employed by a contractor or subcontractor in the execution of a contract for the public work with the state, a political subdivision of the state, or any officer or public body of the state or a political subdivision of the state.

§ 2258.023. Prevailing Wage Rates to be Paid by Contractor and Subcontractor; Penalty

(a) The contractor who is awarded a contract by a public body or a subcontractor of the contractor shall pay not less than the rates determined under Section 2258.022 to a worker employed by it in the execution of the contract.

(b) A contractor or subcontractor who violates this section shall pay to the state or a political subdivision of the state on whose behalf the contract is made, $60 for each worker employed for each calendar day or part of the day that the worker is paid less than the wage rates stipulated in the contract. A public body awarding a contract shall specify this penalty in the contract.

(c) A contractor or subcontractor does not violate this section if a public body awarding a contract does not determine the prevailing wage rates and specify the rates in the contract as provided by Section 2258.022.

(d) The public body shall use any money collected under this section to offset the costs incurred in the administration of this chapter.

(e) A municipality is entitled to collect a penalty under this section only if the municipality has a population of more than 10,000.

§ 2258.024. Records

(a) A contractor and subcontractor shall keep a record showing:

(1) the name and occupation of each worker employed by the contractor or subcontractor in the construction of the public work; and

(2) the actual per diem wages paid to each worker.

(b) The record shall be open at all reasonable hours to inspection by the officers and agents of the public body.

§ 2258.025. Payment Greater Than Prevailing Rate Not Prohibited

This chapter does not prohibit the payment to a worker employed on a public work an amount greater than the general prevailing rate of per diem wages.

SC-6.13.B Trench and Shoring Safety

Add the following Paragraph 6.13.B.1.

As required by the Texas Health & Safety Code, Title 9, Subtitle A, Chapter 756, Subchapter C, Contractor is required to comply with the trench safety standards of the Occupational Safety and Health Administration, 29 C.F.R. 1926, Subpart P, Excavations, in effect during the period of construction of the Project. Contractor agrees to comply with, and Owner agrees to include in the Bid Documents, a copy of any special shoring requirements, if any, required for the Project. Owner agrees to furnish to Contractor a copy of any geotechnical information that was obtained by the Owner for use by the Contractor in the design of the trench safety system, if any.

SC-14.02 Article 14 - Payments To Contractor And Completion

Change the 1st sentence in Paragraph 14.02.C.1 from "Ten days after presentation of the Application for Payment to OWNER…" to "Thirty (30) days after presentation of the Application for Payment to OWNER…"

SC-17.02 Delete the second sentence of Paragraph 17.02.

SC-17.07 Independent Contractor

Add the following Paragraph 17.07:

The Contract shall not be construed as creating an employer/employee relationship, a partnership, or a joint venture. The Contractor's services shall be those of an independent contractor. The Contractor agrees and understands that the Contract does not grant any rights or privileges established for employees of the Owner.

SC-17.08 Prohibition of Gratuities

Add the following Paragraph 17.08:

The Owner may, by Written Notice to the Contractor, terminate the Contract without liability if is determined by the Owner that gratuities were offered or given by the Contractor or any agent or representative of the Contractor to any officer or employee of the Owner with a view toward securing the Contract or securing favorable treatment with respect to the awarding or amending or the making of any determinations with respect to the performing of such Contract. In the event the Contract is terminated by the Owner pursuant to this provision, the Owner shall be entitled, in addition to any other rights and remedies, to recover or withhold the amount of the cost incurred by the Contractor in providing such gratuities.

SC-17.09 Prohibition Against Personal Interest in Contracts

Add the following Paragraph 17.09

No officer, employee, independent consultant, or elected official of the Owner who is involved in the development, evaluation, or decision-making process of the performance of any solicitation shall have a financial interest, direct or indirect, in the Contract resulting from that solicitation. Any violation of this provision, with the knowledge, expressed or implied, of the Contractor shall render the Contract voidable by the Owner.

SC-18. Article 18 – Right to Audit

Add the following Article 18.

18.01 Whenever the Owner enters into any type of contractual arrangement with the Contractor, then the Contractor's "records" shall upon reasonable notice be open to inspection and subject to audit and/or reproduction during normal business working hours. The Owner's representative, or an outside representative engaged by the Owner, may perform such audits. The Contractor shall maintain all records relating to this Contract for four (4) years from the date of final payment under this Contract, or until pending litigation has been completely and fully resolved, whichever occurs later.

18.02 The Owner shall have the exclusive right to examine the records of the Contractor. The term "records" as referred to herein shall include any and all information, materials and data of every kind and character, including without limitation records, books, papers, documents, contracts, schedules, commitments, arrangements, notes, daily diaries, reports, drawings, receipts, vouchers and memoranda, and any and all other agreements, sources of information and matters that may, in the Owner's judgment, have any bearing on or pertain to any matters, rights, duties or obligations under or covered by any contract document. Such records shall include (hard copy, as well as electronic data), written policies and procedures, time sheets, payroll registers, cancelled checks, personnel file data, correspondence, e-mail, general ledger entries, and any other record in the Contractor's possession which may have a bearing on matters of interest to the Owner in connection with the Contractor's dealings with the Owner (all of the foregoing are hereinafter referred to as "records"). In addition, the Contractor shall permit interviews of employees as well as agents, representatives, vendors, Subcontractors and other third parties paid by the Contractor to the extent necessary to adequately permit evaluation and verification of the following:

A. The Contractor's compliance with Contract Documents;

B. The Contractor's compliance with the Owner's business ethics policies; and

C. If necessary, the extent of the Work performed by the Contractor at the time of Contract termination.

18.03 The Contractor shall require all payees (examples of payees include Subcontractors, insurance agents, material suppliers, etc.) to comply with the provisions of this Article 17 by securing the requirements hereof in a written agreement between the Contractor and payee. Such requirements include a flow-down right of audit provision in contracts with payees that also apply to Subcontractors and Sub-subcontractors, material suppliers, etc. The Contractor shall cooperate fully and shall require Payees and all of the Contractor's Subcontractors to cooperate fully in furnishing or in making available to the Owner from time to time whenever requested, in an expeditious manner, any and all such information, materials, and data.

18.04 The Owner's authorized representative or designee shall have reasonable access to the Contractor's facilities, shall be allowed to interview all current or former employees to discuss matters pertinent to the performance of this Contract, and shall be provided adequate and appropriate work space in order to conduct audits in compliance with this Article 17.

18.05 If an audit inspection or examination in accordance with this Article 17 discloses overpricing or overcharges of any nature by the Contractor to the Owner in excess of one-half of one percent (0.5%) of the total contract billings, then the reasonable actual cost of the Owner's audit shall be reimbursed to the Owner by the Contractor. Any adjustments and/or payments, which must be made as a result of any such audit or inspection of the Contractor's invoices and/or records, shall be made within a reasonable amount of time (not to exceed 90 days) from presentation of the Owner's findings to the Contractor.

18.06 The Contractor shall take reasonable actions to prevent any actions or conditions which could result in a conflict with the Owner's best interests. These obligations shall apply to the activities of the Contractor's employees, agents, Subcontractors, etc. in their dealings and relations with the Owner's current and former employees and their relatives. For example, the Contractor's employees, agents or Subcontractors should not make or provide to be made any employment, gifts, extravagant entertainment, payments, loans or other considerations to the Owner's representatives, employees or their relatives.

18.07 It is also understood and agreed by the Contractor that any solicitation of gifts or any other item of value by anyone representing the Owner is to be reported within two (2) business working days to the Owner at the following telephone number: 512-930-3723. Failure to report any such solicitations or offers shall be deemed a material breach of contract entitling the Owner to pursue damages resulting from the failure to comply with this provision.

END OF SECTION

THIS PAGE INTENTIONALLY LEFT BLANK.

SECTION 00800 HH
CITY OF GEORGETOWN
ADOPTED PREVAILING WAGE RATES

THIS PAGE INTENTIONALLY LEFT BLANK.

CITY OF GEORGETOWN ADOPTED PREVAILING WAGE RATES

Position	Recommended hourly rate
Acoustic Ceiling Installer	Davis Bacon
Air Tool Operator	Davis Bacon
Asphalt Distributor Operator	Davis Bacon
Asphalt Paving Machine Operator	Davis Bacon
Asphalt Raker	Davis Bacon
Asphalt Shoveler	Davis Bacon
Boilermaker	Davis Bacon
Bricklayer/Stone Mason, Entry Level	9.00
Bricklayer/Stone Mason, Journeyman	14.00
Broom or Sweeper Operator	Davis Bacon
Bulldozer Operator, Over 150 HP	Davis Bacon
Bulldozer Operator, Under 150 HP	Davis Bacon
Carpenter Finisher, Journeyman	15.97
Carpenter, Entry Level	10.00
Carpenter, Intermediate Level	11.88
Caulker	Davis Bacon
Cement Finisher, Entry Level	Davis Bacon
Cement finisher, Journeyman	Davis Bacon
Cement Mason, Intermediate Level	Davis Bacon
Concrete Finisher-Paving	Davis Bacon
Concrete Finisher-Structures	Davis Bacon
Concrete Paving Curbing Machine Operator	Davis Bacon
Concrete Paving Finishing Machine Operator	Davis Bacon

Concrete Rubber	Davis Bacon
Construction and Building Inspectors	Davis Bacon
Crane, Clamshell, Backhoe, Derrick, Dragline, Shovel Operator	Davis Bacon
Drywall System Installer, Entry Level	10.00
Drywall System Installer, Journeyman	13.00
Earth Drillers, Except Oil and Gas	DB
Electrician, Apprentice	13.00
Electrician, Entry Level	9.00
Electrician, Journeyman (Certificate)	19.00
Electrician, Master/Certified	22.67
Elevator/Escalator Installer	Davis Bacon
Elevator/Escalator Mechanic	Davis Bacon
Equipment Operator, Crane	19.00
Equipment Operator, Heavy	11.75
Equipment Operator, Light	10.00
Explosive Workers, Ordnance Handling Experts and Blasters	Davis Bacon
Fireproofing Installer	Davis Bacon
First-line Supervisors/Managers of Construction Trades and Extraction Workers	Davis Bacon
Flagger	Davis Bacon
Floor Layer, Helper	Davis Bacon
Floor Layer, Resilient Floor Installer	Davis Bacon
Form Builder/Setter, Structures	Davis Bacon
Form Setter, Paving and Curb	Davis Bacon
Foundation Drill Operator, Crawler Mounted	Davis Bacon
Foundation Drill Operator, Truck Mounted	Davis Bacon

Front End Loader Operator	Davis Bacon
Gardener	Davis Bacon
Glazier	Davis Bacon
Ground Man	Davis Bacon
Hazardous Materials Removal Workers	Davis Bacon
Highway Maintenance Workers	Davis Bacon
HVAC Mechanic, Journeyman	16.25
HVAC Sheet Metal Worker, Intermediate Level	11.75
HVAC, Entry Level	9.00
Insulation Workers, Floor, Ceiling, Walls	Davis Bacon
Insulation Workers, Mechanical	Davis Bacon
Iron Worker, Entry Level	10.00
Iron Worker, Reinforcing, Intermediate Level	14.50
Iron Worker, Structural Journeyman	14.50
Irrigation Technician	Davis Bacon
Laborer, Common	8.50
Laborer, Utility	9.67
Landscape Foreman	Davis Bacon
Lather	Davis Bacon
Lineman	Davis Bacon
Mechanic	Davis Bacon
Mechanic Lead, Journeyman	15.67
Millwright	Davis Bacon
Mixer Operator	Davis Bacon
Mixer Operator, Concrete Paving	Davis Bacon

Motor Grader Operator, Fine Grade	Davis Bacon
Motor Grader Operator, Rough	Davis Bacon
Oiler	Davis Bacon
Painter, Sprayer	10.63
Painter, Structures	10.63
Painter, Wallcover	10.63
Pavement Marking Machine Operator	Davis Bacon
Pipefitter	Davis Bacon
Pipelayer	Davis Bacon
Piping/Duct Insulator	Davis Bacon
Planer Operator	Davis Bacon
Plumber (excluding HVAC), Intermediate Level	12.00
Plumber Lead, Journeyman	20.00
Powder Man	Davis Bacon
Reinforcing Steel Setter, Entry Level	10.00
Reinforcing Steel Setter, Journeyman	11.67
Reinforcing Steel Setter, Paving	Davis Bacon
Roller Operator, Pneumatic, Self-Propelled	Davis Bacon
Roller Operator, Steel Wheel, Plant Mix Pavement	Davis Bacon
Roofer, Metal	11.00
Roofing Foreman	Davis Bacon
Sandblaster	Davis Bacon
Scraper Operator	Davis Bacon
Servicer	Davis Bacon
Sheet Metal Mechanic, Journeyman	17.50

Sign Installer (PGM)	Davis Bacon
Slip Form Machine Operator	Davis Bacon
Spreader Box Operator	Davis Bacon
Structural Steel Worker	Davis Bacon
Tapers	Davis Bacon
Terrazzo Workers and Finishers	Davis Bacon
Tile and Marble Worker, Journeyman	Davis Bacon
Tile Setter, Intermediate Level	Davis Bacon
Tractor Operator, Crawler Type	Davis Bacon
Traveling Mixer Operator	Davis Bacon
Trenching Machine Operator, Heavy	Davis Bacon
Truck Driver Tandem Axle Semi-Trailer	13.00
Truck Driver, Lowboy-Float	Davis Bacon
Truck Driver, Single Axle, heavy	Davis Bacon
Truck Driver, Single Axle, Light	13.44
Wagon Drill, Boring Machine, Post hole Driller Operator	Davis Bacon
Waterproofer	Davis Bacon
Welder Apprentice	10.00
Welder Journeyman	18.00
Work Zone Barricade Servicer	Davis Bacon

THIS PAGE INTENTIONALLY LEFT BLANK.

Engineers Joint Documents Committee
Design and Construction Related Documents
Instructions and License Agreement

Instructions

Before you use any EJCDC document:

1. Read the License Agreement. You agree to it and are bound by its terms when you use the EJCDC document.

2. Make sure that you have the correct version for your word processing software.

How to Use:

1. While EJCDC has expended considerable effort to make the software translations exact, it can be that a few document controls (e.g., bold, underline) did not carry over.

2. Similarly, your software may change the font specification if the font is not available in your system. It will choose a font that is close in appearance. In this event, the pagination may not match the control set.

3. If you modify the document, you must follow the instructions in the License Agreement about notification.

4. Also note the instruction in the License Agreement about the EJCDC copyright.

License Agreement

You should carefully read the following terms and conditions before using this document. Commencement of use of this document indicates your acceptance of these terms and conditions. If you do not agree to them, you should promptly return the materials to the vendor, and your money will be refunded.

The Engineers Joint Contract Documents Committee ("EJCDC") provides **EJCDC Design and Construction Related Documents** and licenses their use worldwide. You assume sole responsibility for the selection of specific documents or portions thereof to achieve your intended results, and for the installation, use, and results obtained from **EJCDC Design and Construction Related Documents**.

You acknowledge that you understand that the text of the contract documents of **EJCDC Design and Construction Related Documents** has important legal consequences and that consultation with an attorney is recommended with respect to use or modification of the text. You further acknowledge that EJCDC documents are protected by the copyright laws of the United States.

License:

You have a limited nonexclusive license to:

1. Use **EJCDC Design and Construction Related Documents** on any number of machines owned, leased or rented by your company or organization.

2. Use **EJCDC Design and Construction Related Documents** in printed form for bona fide contract documents.

3. Copy **EJCDC Design and Construction Related Documents** into any machine readable or printed form for backup or modification purposes in support of your use of **EJCDC Design and Construction Related Documents**.

You agree that you will:

1. Reproduce and include EJCDC's copyright notice on any printed or machine-readable copy, modification, or portion merged into another document or program. All proprietary rights in **EJCDC Design and Construction Related Documents** are and shall remain the property of EJCDC.

2. Not represent that any of the contract documents you generate from **EJCDC Design and Construction Related Documents** are EJCDC documents unless (i) the document text is used without alteration or (ii) all additions and changes to, and deletions from, the text are clearly shown.

You may not use, copy, modify, or transfer EJCDC Design and Construction Related Documents, or any copy, modification or merged portion, in whole or in part, except as expressly provided for in this license. Reproduction of EJCDC Design and Construction Related Documents in printed or machine-readable format for resale or educational purposes is expressly prohibited.

If you transfer possession of any copy, modification or merged portion of EJCDC Design and Construction Related Documents to another party, your license is automatically terminated.

Term:

The license is effective until terminated. You may terminate it at any time by destroying **EJCDC Design and Construction Related Documents** altogether with all copies, modifications and merged portions in any form. It will also terminate upon conditions set forth elsewhere in this Agreement or if you fail to comply with any term or condition of this Agreement. You agree upon such termination to destroy **EJCDC Design and Construction Related Documents** along with all copies, modifications and merged portions in any form.

Limited Warranty:

EJCDC warrants the CDs and diskettes on which **EJCDC Design and Construction Related Documents** is furnished to be free from defects in materials and workmanship under normal use for a period of ninety (90) days from the date of delivery to you as evidenced by a copy of your receipt.

There is no other warranty of any kind, either expressed or implied, including, but not limited to the implied warranties of merchantability and fitness for a particular purpose. Some states do not allow the exclusion of implied warranties, so the above exclusion may not apply to you. This warranty gives you specific legal rights and you may also have other rights which vary from state to state.

EJCDC does not warrant that the functions contained in **EJCDC Design and Construction Related Documents** will meet your requirements or that the operation of **EJCDC Design and Construction Related Documents** will be uninterrupted or error free.

Limitations of Remedies:

EJCDC's entire liability and your exclusive remedy shall be:

1. the replacement of any document not meeting EJCDC's "Limited Warranty" which is returned to EJCDC's selling agent with a copy of your receipt, or

2. if EJCDC's selling agent is unable to deliver a replacement CD or diskette which is free of defects in materials and workmanship, you may terminate this Agreement by returning EJCDC Document and your money will be refunded.

In no event will EJCDC be liable to you for any damages, including any lost profits, lost savings or other incidental or consequential damages arising out of the use or inability to use **EJCDC Design and Construction Related Documents** even if EJCDC has been advised of the possibility of such damages, or for any claim by any other party.

Some states do not allow the limitation or exclusion of liability for incidental or consequential damages, so the above limitation or exclusion may not apply to you.

General:

You may not sublicense, assign, or transfer this license except as expressly provided in this Agreement. Any attempt otherwise to sublicense, assign, or transfer any of the rights, duties, or obligations hereunder is void.

This Agreement shall be governed by the laws of the State of Virginia. Should you have any questions concerning this Agreement, you may contact EJCDC by writing to:

Arthur Schwartz, Esq.
General Counsel
National Society of Professional Engineers
1420 King Street
Alexandria, VA 22314

Phone: (703) 684-2845
Fax: (703) 836-4875
e-mail: aschwartz@nspe.org

You acknowledge that you have read this agreement, understand it and agree to be bound by its terms and conditions. You further agree that it is the complete and exclusive statement of the agreement between us which supersedes any proposal or prior agreement, oral or written, and any other communications between us relating to the subject matter of this agreement.

Change Order

No. _____

Date of Issuance: _____ Effective Date: _____

Project:	Owner:	Owner's Contract No.:
Contract:		Date of Contract:
Contractor:		Engineer's Project No.:

The Contract Documents are modified as follows upon execution of this Change Order:

Description:

Attachments (list documents supporting change):

CHANGE IN CONTRACT PRICE:	CHANGE IN CONTRACT TIMES:
Original Contract Price: $_____	Original Contract Times: ☐ Working days ☐ Calendar days Substantial completion (days or date): _____ Ready for final payment (days or date): _____
[Increase] [Decrease] from previously approved Change Orders No. _____ to No. $_____	[Increase] [Decrease] from previously approved Change Orders No. _____ to No. _____: Substantial completion (days): _____ Ready for final payment (days): _____
Contract Price prior to this Change Order: $_____	Contract Times prior to this Change Order: Substantial completion (days or date): _____ Ready for final payment (days or date): _____
[Increase] [Decrease] of this Change Order: $_____	[Increase] [Decrease] of this Change Order: Substantial completion (days or date): _____ Ready for final payment (days or date): _____
Contract Price incorporating this Change Order: $_____	Contract Times with all approved Change Orders: Substantial completion (days or date): _____ Ready for final payment (days or date): _____

RECOMMENDED:	ACCEPTED:	ACCEPTED:
By: _____	By: _____	By: _____
Engineer (Authorized Signature)	Owner (Authorized Signature)	Contractor (Authorized Signature)
Date: _____	Date: _____	Date: _____

Approved by Funding Agency (if applicable):

_____ Date: _____

Change Order

Instructions

A. GENERAL INFORMATION

This document was developed to provide a uniform format for handling contract changes that affect Contract Price or Contract Times. Changes that have been initiated by a Work Change Directive must be incorporated into a subsequent Change Order if they affect Price or Times.

Changes that affect Contract Price or Contract Times should be promptly covered by a Change Order. The practice of accumulating Change Orders to reduce the administrative burden may lead to unnecessary disputes.

If Milestones have been listed in the Agreement, any effect of a Change Order thereon should be addressed.

For supplemental instructions and minor changes not involving a change in the Contract Price or Contract Times, a Field Order should be used.

B. COMPLETING THE CHANGE ORDER FORM

Engineer normally initiates the form, including a description of the changes involved and attachments based upon documents and proposals submitted by Contractor, or requests from Owner, or both.

Once Engineer has completed and signed the form, all copies should be sent to Owner or Contractor for approval, depending on whether the Change Order is a true order to the Contractor or the formalization of a negotiated agreement for a previously performed change. After approval by one contracting party, all copies should be sent to the other party for approval. Engineer should make distribution of executed copies after approval by both parties.

If a change only applies to price or to times, cross out the part of the tabulation that does not apply.

CAPITAL IMPROVEMENT PROJECT REQUIREMENTS

SECTION CIP

TECHNICAL SPECIFICATIONS

SECTION CIP00 – DEVELOPMENT PROJECTS

CIP00.01 TESTING

A. All testing for private development projects shall be coordinated and paid for by the developer. All tests that require witness by the City of Georgetown or its designated representative shall be scheduled a minimum of two (2) working days prior to the test. Working days shall be defined as Monday through Friday excluding all holidays observed by the City of Georgetown.

B. All tests shall be certified by the appropriate authority and documentation shall be provided to the City clearly stating the results of the tests.

CIP00.02 SPECIFICATIONS

A. All portions of the specifications found within shall apply to development projects excluding the PAYMENT sections. All testing as required by a specification shall be done in accordance with the appropriate section except that the developer shall bear all costs of testing and shall coordinate all testing.

B. SECTION CIP3 – SUMMARY OF WORK shall not apply to development projects.

END OF SECTION

TECHNICAL SPECIFICATIONS

SECTION CIP1 – DEFINITION OF TERMS

CIP1.01 DEFINITIONS

A. Wherever in these specifications or in other contract documents, the following terms or pronouns in place of them are used, the intent and meaning shall be interpreted as follows:

1. CITY - The City of Georgetown, party of the First Part.

2. COUNCIL - The Georgetown City Council.

3. COUNTY - A political Subdivision of the State.

4. ENGINEER - Representative of the City.
*ENGINEER - Representative of the Contractor or the Developer.

5. INSPECTOR - The authorized representative of the City assigned to inspect any or all parts of the work and the materials to be used therein.

6. CONTRACTOR - The individual, firm or corporation or any combination thereof, Party of the Second Part, with which the contract is made by the City, Developer or Public Cooperation.

7. SUPERINTENDENT - The representative of the Contractor authorized to receive and fulfill instructions from the Engineer or representative of the City, and who shall supervise and direct the construction.

8. PAVEMENT DESIGN MANUAL - Texas Department of Transportation manual outlining procedure to be followed in the design and control of asphaltic concrete and portland cement concrete mixes for structures and pavements.

9. MANUAL OF TESTING PROCEDURES - Texas Department of Transportation Materials and Tests Division manual outlining testing methods and procedures.

10. PLANS - The drawings approved by the City, or true reproductions thereof, which show the location, character, dimensions, and details of the work and which are a part of the contract. Plans and specifications to be prepared by a Professional Engineer registered in the State of Texas.

11. SPECIFICATIONS - The directions, provisions and requirements contained herein or in the Special Provisions, supplemented by such "Special Provisions or Standards" as may be issued or made pertaining to the method and manner or performing the work or qualities of materials to be furnished. Where the phrases "or directed by the City", "ordered by the City", or "to the satisfaction of the City" occur, it is to be understood that the directions, orders, or instructions of which they relate are within the limitations of, and authorized by the contract. "Special Provisions" will cover work pertaining to a particular project included in the proposal but not covered by the specifications. Where reference is made to specifications of ASTM, AWWA, AASHTO or Bulletins and Manuals of the Texas Department of Transportation it shall be construed to mean the latest standard or tentative standard in effect on the date of the proposal.

12. RIGHT OF WAY - The land provided for a highway or street, owned by the City of Georgetown or the municipality in which the highway or street is in.

13. ROADWAY - The portion of the highway or street within the limits of construction.

14. ROADBED - The graded portion of the roadway between the intersection of top and side slopes upon which the base course, surface course, shoulders and median are constructed.

15. SUBGRADE - That portion of the roadbed upon which the subbase, base, or pavement structure is to be placed.

16. BRIDGES - Structures of over 20-foot span measured from face to face of abutments, or in case of copings, from face to face of copings, and multiple span structures of over 20-foot length, measured between inside of end walls along the centerline of the roadbed.

17. CULVERTS - All drainage structures not defined as bridges.

18. TEMPORARY STRUCTURES - All temporary bridges and structures required to maintain traffic during the construction of the work.

19. SUBSTRUCTURE - That part of the structure below the bridge seats or below the springing lines of arches. Parapets, back walls and wing walls of abutments shall be considered as parts of the substructure.

20. SUPERSTRUCTURE - The part of the structure above the bridge seats or above the springing lines of arches.

21. THE WORK - The work shall include the furnishing of all labor, materials, equipment, and other incidentals necessary or convenient to the successful completion of the project and the carrying out of all the duties and obligations imposed by the contract.

22. PROJECT - The specific section or sections of the highway or street together with all appurtenances and construction to be performed thereon under the contract.

23. ASTM - American Society for Testing Materials.

24. AASHTO - American Association of State Highway and Transportation Officials.

25. ANSI - American National Standards Institute.

26. API - American Petroleum Institute.

27. UL - Underwriters Laboratory, Inc.

28. SCREENS AND SIEVES - As defined by the ASTM.

29. HIGHWAY, STREET OR ROAD - A general term denoting a public way for purposes of vehicular travel, including the entire area within the right of way. Recommended usage in urban areas-highway or road.

30. ARTERIAL HIGHWAY OR STREET - A general term denoting a highway or street primarily for through traffic, usually on a continuous route.

31. MAJOR STREET OR MAJOR HIGHWAY - An arterial highway or street with intersections at grade and direct access to abutting property, and on which geometric design and traffic control measures are used to expedite the safe movement of through traffic.

32. THROUGH STREET OR THROUGH HIGHWAY - Every highway, street, or portion thereof at the entrance to which vehicular traffic from intersecting highways or streets is required by law to stop before entering or crossing the same and when stop signs are erected.

33. LOCAL STREET OR LOCAL ROAD - A street or road primarily for access to residence, business, or other abutting property.

END OF SECTION

TECHNICAL SPECIFICATIONS

SECTION CIP2 - ABBREVIATIONS

CIP2.01 SCOPE

A. Whenever in these Contract Documents or Specifications the following abbreviations are used, the intent and meaning shall be interpreted as follows:

1.	AA	Aluminum Association
2.	AAMA	Architectural Aluminum Manufacturers' Association
3.	AASHTO	American Association of State Highway and Transportation Officials
4.	ACI	American Concrete Institute
5.	AFBMA	Anti-Friction Bearing Manufacturers' Association
6.	AGA	American Gas Association
7.	AGMA	American Gear Manufacturers' Association
8.	AISC	American Institute of Steel Construction
9.	AISI	American Iron and Steel Institute
10.	AITC	American Institute of Timber Construction
11.	AMCA	Air Moving and Conditioning Association
12.	ANSI	American National Standards Institute
13.	APA	American Plywood Association
14.	API	American Petroleum Institute
15.	AREA	American Railway Engineering Association
16.	ASAE	American Society of Agricultural Engineers
17.	ASCE	American Society of Civil Engineers
18.	ASHRAE	American Society of Heating, Refrigerating and Air-Conditioning Engineers, Inc.
19.	ASME	American Society of Mechanical Engineers
20.	ASTM	American Society of Testing and Materials
21.	AWI	Architectural Woodwork Institute
22.	AWPA	American Wood Preservers' Association
23.	AWPB	American Wood Preservers' Bureau
24.	AWS	American Welding Society
25.	AWWA	American Water Works Association
26.	BHMA	Builders' Hardware Manufacturers' Association
27.	CBMA	Certified Ballast Manufacturers' Association
28.	CDA	Copper Development Association
29.	CISPI	Cast Iron Soil Pipe Institute
30.	CMAA	Crane Manufacturers' Association of America
31.	CRSI	Concrete Reinforcing Steel Institute
32.	Fed. Spec.	Federal Specifications

33.	HI	Hydraulic Institute
34.	HMI	Hoist Manufacturers' Institute
35.	ICBO	International Conference of Building Officials
36.	IEEE	Institute of Electrical and Electronics Engineers, Inc.
37.	IPCEA	Insulated Power Cable Engineer's Association
38.	MMA	Monorail Manufacturers' Association
39.	NACE	National Association of Coatings Engineers
40.	NBMA	National Builders' Hardware Association
41.	NEC	National Electrical Code
42.	NEMA	National Electrical Manufacturers' Association
43.	NESC	National Electric Safety Code
44.	NFPA	National Fire Protection Association
45.	NLMA	National Lumber Manufacturers' Association
46.	NWMA	National Woodwork Manufacturers' Association
47.	OECI	Overhead Electrical Crane Institute
48.	OSHA	Occupational Safety and Health Act (both Federal & State)
49.	PS	Product Standards Sections - U.S. Department of Commerce
50.	RMA	Rubber Manufacturers' Association
51.	SAE	Society of Automotive Engineers
52.	SSPC	Steel Structures Painting Council
53.	TCA	Tile Council of America
54.	TxDOT	Texas Department of Transportation
55.	TEMA	Tubular Exchanger Manufacturers' Association
56.	UBC	Uniform Building Code
57.	UL	Underwriter's Laboratories, Inc.
58.	WWPA	Western Wood Products Association

END OF SECTION

TECHNICAL SPECIFICATIONS

SECTION CIP3 – SUMMARY OF WORK

CIP3.01 SCOPE OF WORK

A. This specification covers the requirements for constructing the South Lake to South Fork Wastewater Improvements project as shown on the Drawings and as specified herein.

B. The Work is located within the City of Georgetown beginning at the location of the South Lake Water Treatment Plant located at the intersection of Crockett Gardens Road and Cedar Breaks Road and proceeding cross-country and within existing rights-of-way approximately 4.7 miles to the southern endpoint at an existing sewer interceptor connection at the South Fork of the San Gabriel River, as shown on the Location Plan included in the Plans.

C. The Work (as shown on the Drawings) includes, but is not necessarily limited to, the following:

1. Mobilization and demobilization.

2. Storm Water Pollution Prevention Plan and Control in accordance with specifications, laws, rules and assumption of responsibility for plan and control.

3. Construction staking and surveying for easement and pipeline layouts, all work fully performed.

4. Clearing and Grubbing, including tree, debris and obstructions removal.

5. Traffic Control.

6. Furnishing and installing 15-inch, 24-inch, and 30-inch PVC gravity sewer pipe for Wastewater Service by Open Trench Construction including fittings, excavation, dewatering, bedding, backfill, and trench restoration.

7. Furnishing and installing 36-in PS72 FRP/HOBAS gravity sewer pipe for Wastewater Service by Open Trench Construction including fittings, excavation, dewatering, bedding, backfill, and trench restoration.

8. Furnishing and installing 12-inch PVC and ductile iron force main pipe for Wastewater Service by Open Trench Construction including fittings, excavation, dewatering, bedding, backfill, and trench restoration.

9. Furnishing and installing 18-inch PVC and ductile iron force main pipe for Wastewater Service by Open Trench Construction including fittings, excavation, dewatering, bedding, backfill, and trench restoration.

10. Furnish and installing four (4) trenchless pipelines inside steel casings by Other Than Open Cut for crossing of unnamed creek, rivers, and state highway including access/receiving pits, tracer wire, grouting, and all related items

11. Furnishing and installing precast concrete watertight manholes.

12. Development, design, and implementation of a trench safety system as required by the Occupational Safety and Health Administration.

13. Leak testing wastewater pipe.

14. Mandrel testing of wastewater pipeline.

15. Testing of new manholes.

16. Street cleaning of the roads and public roadways impacted by this project.

17. Dewatering, including both in advance of, and during, construction activities.

18. Site restoration including hydromulch seeding of open areas.

19. New epoxy coating system (corrosion resistant) for all sewer manholes.

20. Providing a pre-construction video and post-construction GPS as-built survey.

21. All other work as shown on the drawings and included in the Prejct Manual.

CIP3.02 WORK SEQUENCE

A. Perform work in sequence as agreed upon at the pre-construction conference.

B. Perform pipeline pressure testing and mandrel testing (after 30 days) as sections of pipelines are constructed and accepted. Do not wait until all pipe is installed to perform testing of pipe.

CIP3.03 PROGRESS OF THE WORK

A. The Work shall be started within 10 days following the effective date of the Notice to Proceed, and the Work shall be executed with such progress as may be required to prevent any delay to the general completion of the project. The Work shall be executed at such times and in or on such parts of the project, and with such personnel, materials, and equipment to assure completion of the Work in the time established by the Agreement.

B. If the Contractor, for his convenience and at his own expense, should desire to carry on his work at night or outside regular hours, he shall submit a written approval request to the City and he shall allow ample time for satisfactory arrangements to be made for inspecting the work in progress. The Contractor shall pay the expenses for extra inspection required for work outside regular hours. Normal working hours for this purpose are Monday through Friday, 7:00 a.m. to 6:00 p.m. The Contractor shall light the different parts of the Project as required to comply with all applicable Federal and State regulations and with all applicable requirements of the City of Georgetown.

CIP3.04 CONSTRUCTION SCHEDULE

A. The Contractor shall, within five (5) days after the effective date of the Notice to Proceed, provide and submit to the City for approval, the Schedule for the project. A complete updated schedule shall be submitted with monthly pay requests. The Schedule shall account for all the work of the Contractor and his Subcontractors and suppliers. In addition to all reasonably important construction activities, the Schedule shall provide for the proper sequence of construction considering the various crafts, purchasing time, submittal approval, material delivery, equipment fabrication, and similar time-consuming factors.

B. The Schedule shall include, as a minimum, the earliest starting and finish dates, and latest starting and finish dates, and the total float for each task or item. The Contractor shall update (monitor) the schedule as necessary and shall submit to the City a copy of the updated schedule (monthly) at the same time the pay estimate is prepared. The schedule shall contain all of the items of the Periodic Estimate and Pay Schedule.

C. While the Contractor bears full responsibility for scheduling all phases and stages of the Work to ensure its successful prosecution and completion within the time specified in accordance with all provisions of these Specifications, the Contractor is specifically required to complete fully or complete such stages of work to enable his Subcontractors and suppliers to complete their work within the respective times specified.

D. If the City determines that construction activities are falling behind schedule at any time during the construction period, the City may require the Contractor to add equipment and/or construction forces, including increases in working hours, in such quantities as are required to bring construction activities back on schedule. Upon receipt of written communication from the City requiring such addition, the Contractor shall furnish same at no additional cost to the City.

CIP3.05 PRECONSTRUCTION CONFERENCE

A. A Pre-Construction Conference shall be held as soon as possible after Award of Contract and before work is started. The conference will be held at a location selected by the City. The conference will be attended by:

1. Contractor's Office Representative.

2. Contractor's General Superintendent.

3. Any subcontractors' or suppliers' representatives whom the Contractor may desire to invite or the City may request.

4. Engineer's Representatives.

5. City’s Representatives.

6. Other individuals that the City may invite.

B. A suggested format would include but not be limited to the following subjects:

1. Check of required bonds and insurance certifications.
2. Liquidated damages.
3. Shop drawing submittal and approval procedure.
4. Chain of command, direction of correspondence, and coordinating responsibility between Contractors.
5. Schedule of periodic job meetings for all involved.
6. Introduction of the key project personnel.
7. Equal opportunity requirements.
8. Laboratory testing of material requirements.
9. Inventory of material stored on site provisions.
10. Progress estimate and payment procedure.

11. Discussion of Contractor's Safety program.

12. Scheduled plan for work requiring interruption of existing operations.

13. Review of the construction Plans and Specifications.

14. Discussion of Contractor's storage facilities for the Project.

15. Construction Schedule

C. The City's Representative will preside at the conference, prepare the minutes of the meeting and distribute copies of same to all participants who so request by fully completing the attendance form to be circulated at the beginning of the conference.

CIP3.06 CONSTRUCTION MEETINGS

A. Periodic Construction meetings shall be held at intervals designated by the City, generally weekly to review the progress at the project, submittals, upcoming activities, pay requests, etc. The Contractor is expected to have at least the project Superintendent present for all meetings. Attendance at the meetings shall not be directly paid for but shall be considered subsidiary to the items of the Contract.

B. In the event the Contractor is 30 minutes late or more or fails to attend a Construction meeting without 48 hours prior notice, the Contractor shall be billed the time for the Engineer(s) to represent the City at $200.00 per hour up to one (1) hour.

CIP3.07 COORDINATION WITH CITY'S OPERATIONS AND EXISTING FACILITIES

A. Several parts of the proposed Work under this Contract may connect with or into existing facilities. The Contractor shall carefully plan the schedule of that portion of the Work which will affect the existing facilities. Such plans and schedules shall be subject to the approval of the City of Georgetown.

B. Work which requires shutdown or in any way impedes the operations of existing facilities shall be closely coordinated with the City of Georgetown. A minimum of 48 hours written notice shall be given to the City of Georgetown.

C. Immediately after the award of a Contract for this Project, the Contractor shall outline and submit a scheduled plan for installation of the work, which requires interruption of operations.

CIP3.08 CONTRACTOR'S USE OF PREMISES

A. Contractor shall limit use of premises for his/her work to coordinate use of premises with the City to all for:

1. Work by other Contractors.

2. Public Use

B. Contractor shall assume full responsibility for security of all materials and equipment stored on the site.

C. If directed by the City, move any stored items, which interfere with operations of the City, other contractors, or the public.

D. Obtain and pay for use of additional storage or work areas at no additional cost to the City if needed to perform the Work.

E. Contractor shall submit to the City for approval a plan of operations, designating proposed areas of the property to be used for his operations, material storage, equipment storage, employee's parking, offices and shops. The area shall affect minimal interference with the present operations.

F. Any damage to existing facilities, including contamination, which may be caused by Contractor's personnel, callers, visitors, materials or equipment, shall be repaired or corrected at the sole expense of the Contractor.

G. Any fence that is damaged or removed by the Contractor will be replaced at the Contractor's expense in like kind, and to the satisfaction of the City.

H. Contractor shall be responsible for ingress and egress at the site, shall coordinate traffic flow on roads leading to the work site, and shall submit and obtain approval for traffic control plans from the entity having jurisdiction.

END OF SECTION

THIS PAGE INTENTIONALLY LEFT BLANK.

SECTION CIP4 – SITE CONDITIONS

CIP4.01 SCOPE OF WORK

A. This specification covers the requirements for investigation and verification of site conditions for the Project.

CIP4.02 SUBSURFACE INFORMATION

A. No subsurface investigations have been made by the City. The Bidder / Contractor shall be responsible for any subsurface explorations and tests deemed necessary.

B. No test borings have been made by the City to indicate subsurface materials.

CIP4.03 SITE INVESTIGATION AND REPRESENTATION

A. The Bidder / Contractor acknowledges that he has satisfied himself as to the nature and location of the work; the general and local conditions, particularly those bearing upon availability of transportation, disposal, handling and storage of materials, availability of labor, water, electric power, roads, and uncertainties of weather, river/stream stages, or similar physical conditions at the site; the conformation and conditions of the ground; the character of equipment and facilities needed preliminary to and during the prosecution of the work and all other matters which can in any way affect the work or the cost thereof under this Contract.

B. The Contractor further acknowledges that he has satisfied himself as to the character, quality, and quantity of surface and subsurface materials to be encountered from inspecting the site and from evaluating information derived from exploratory work, if any, that has been done by the City as presented in the geotechnical report, as well as from information presented herein as a part of these Contract Documents. Any failure by the Contractor to acquaint himself with all the available information will not relieve him from responsibility for properly estimating the difficulty or cost of successfully performing the work. Neither the City nor the Engineer assume responsibility for any conclusion or interpretation made by the Contractor on the basis of the information made available by the City or the Engineer.

C. Existing ground profiles shown on the Plans were plotted from field surveys.

CIP4.04 RESPONSIBILITY FOR UTILITY PROPERTIES AND SERVICE

A. Known utilities and structures adjacent to or encountered in the work are shown on the Plans. The locations shown are taken from existing records and the best information available from existing plans; however, it is expected that there may be some discrepancies and omissions in the locations and quantities of utilities and structures shown. Those shown are for the convenience of the Contractor only, and no responsibility is assumed by either the City or the Engineer for their accuracy or completeness.

B. Neither the City nor its officers or agents shall be responsible to the Contractor for damages as a result of the Contractor's failure to protect utilities encountered in the work.

C. The Contractor shall at all times provide unobstructed access to fire hydrants and structures as per Fire Code, underground conduit, manholes, and water or gas valve boxes.

D. Where the Contractor's operations could cause damage which might result in considerable expense, loss, or inconvenience when his operations are adjacent to or near railway, telegraph, telephone, television, power, oil, gas, water, sewer, irrigation, or other systems, no operations shall be commenced until the Contractor has made all arrangements necessary for the protection of these utilities and services.

E. The Contractor shall notify all utility offices that are affected by the construction operation at least 15 days in advance of commencing construction operations. The Contractor shall not expose any utility without first obtaining permission from the affected agency. Once permission has been granted, locate and, if necessary, expose and provide temporary support for all existing underground utilities in advance

of operations.

F. The Contractor shall be solely and directly responsible to the City and operators of such utility properties for any damage, injury, expense, loss, inconvenience, delay, suits, actions, or claims of any character brought because of any injuries or damage that may result from the construction operations under this Contract.

G. In the event of interruption to domestic water, sewer, storm drain, or other utility services as a result of accidental breakage due to construction operations, the Contractor shall promptly notify the proper authority and cooperate with said authority in restoration of service as promptly as possible and bear all costs of repair.

H. The Contractor shall replace, at his own expense, any and all other existing utilities or structures removed or damaged during construction, unless otherwise provided for in these Contract Documents.

I. Where existing utility lines or structures are so located as to physically conflict with permanent structures to be constructed under this Contract, the conflicting utility line or structure shall be permanently relocated.

J. The Contractor shall give immediate notice to the Engineer, the City and the owner of the utility (where applicable) when a physical conflict is determined to exist.

1. Contractor will not be charged contract time for delays caused by unanticipated conflicts.

2. Contractor shall not charge the City of Georgetown for lost time or down time for unanticipated conflicts.

K. Where existing utility lines or structures are so located as to interfere with the Contractor's prosecution of the work, but do not physically conflict with completed manholes or other permanent structures to be constructed under this Contract, any modification, alteration, or relocation of interfering utility, either permanent or temporary, shall be accomplished at the expense of the Contractor.

CIP4.05 INTERFERING STRUCTURES

A. Take necessary precautions to prevent damage to existing structures whether on the surface, aboveground, or underground. An attempt has been made to show major structures on the Plans. While the information has been compiled from the best available sources, it's completeness and accuracy cannot be guaranteed, and it is presented as a guide to avoid known possible difficulties.

B. Protect existing structures from damage, whether or not they lie within the right-of-way or the limits of the easements obtained by the City. Where existing structures must be removed to properly carry out the work, or are damaged during the work, they shall be restored at the Contractor's own expense to at least their original condition and to the satisfaction of the Engineer.

C. The Contractor may, with the approval of the Engineer and without additional compensation, remove and replace in a condition as good as or better than original, any small interfering structures such as fences and signposts that interfere with the Contractor's operations.

CIP4.06 FIELD RELOCATION

A. During the progress of the work, minor relocations of the work may be necessary. Such relocations shall be made only by direction of the Engineer or the City. If existing structures are encountered that will prevent construction as shown, notify the Engineer before continuing with the work in order that the Engineer may make such field revisions as necessary to avoid conflict with the existing structures. If the Contractor fails to notify the Engineer when an existing structure is encountered and proceeds with the work despite this interference, he shall be responsible for any damage that may occur.

CIP4.07 LAND MONUMENTS

A. The Contractor shall preserve or replace any existing Federal, State, County, City, and private land monuments encountered.

B. Any damaged or destroyed monuments shall be replaced at the sole expense of the Contractor as designated by the controlling authority of the Entity.

CIP4.08 PAYMENT

A. No separate payment will be made for work performed in accordance with this section of the specifications, and the cost thereof shall be included in the appropriate items of the Proposal and Bid Schedule.

END OF SECTION

Site Location and Exploration Plans

Contents:

Site Location Plan
Exploration Plan (4 Pages)

Note: All attachments are one page unless noted above.

Site Location

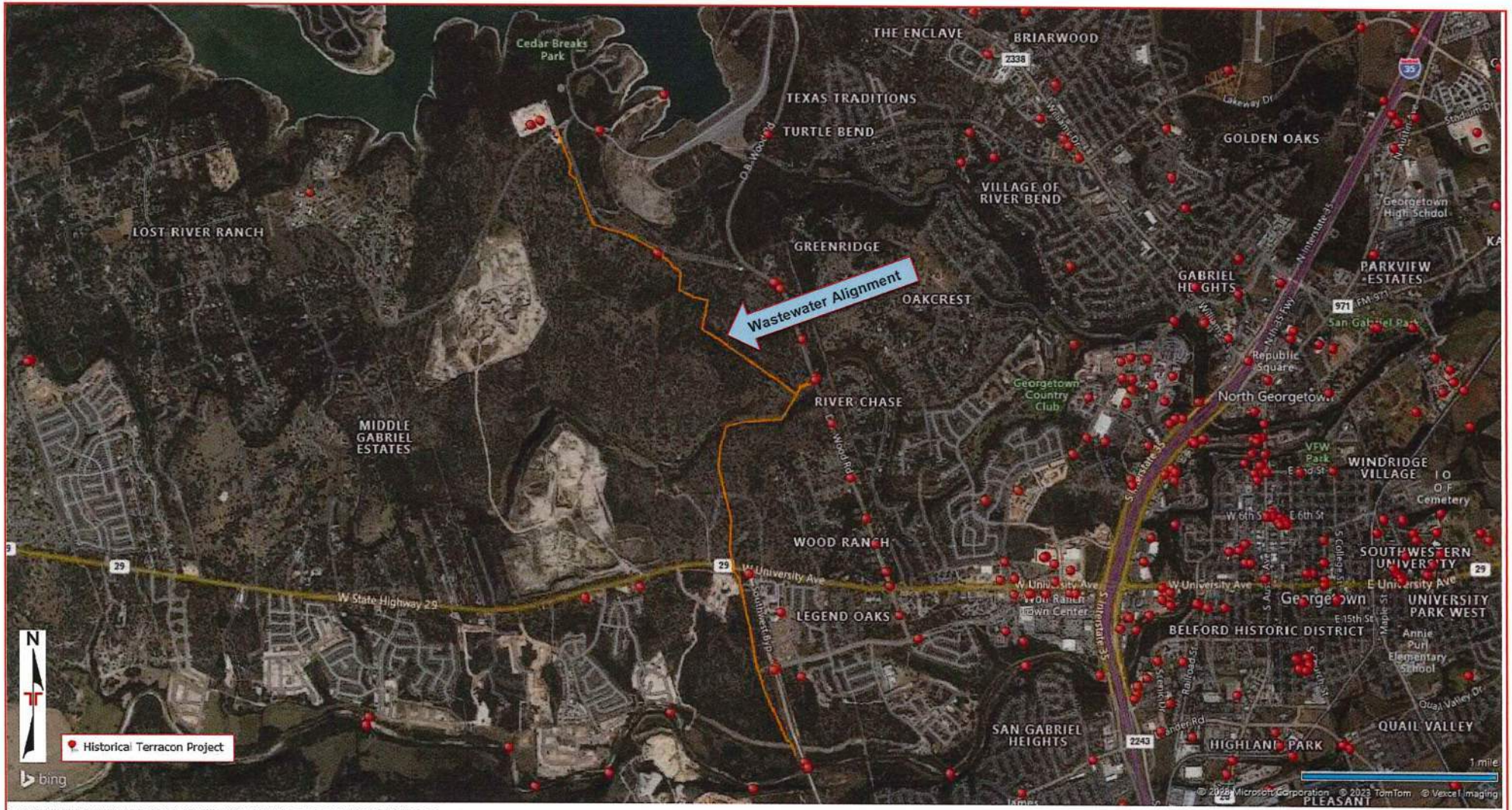

DIAGRAM IS FOR GENERAL LOCATION ONLY, AND IS NOT INTENDED FOR CONSTRUCTION PURPOSES

MAP PROVIDED BY MICROSOFT BING MAPS

Exploration Plan

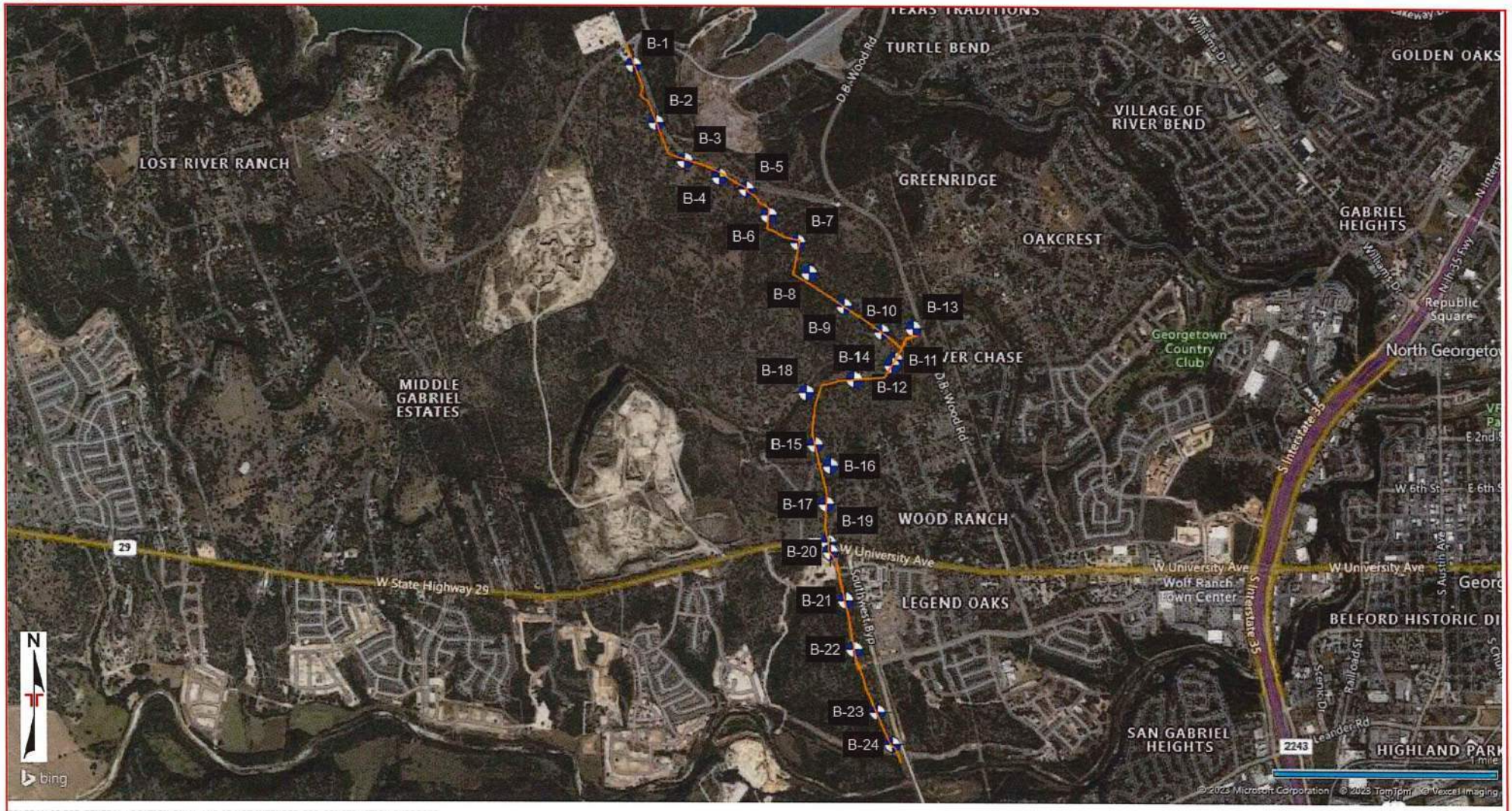

DIAGRAM IS FOR GENERAL LOCATION ONLY, AND IS NOT INTENDED FOR CONSTRUCTION PURPOSES

MAP PROVIDED BY MICROSOFT BING MAPS

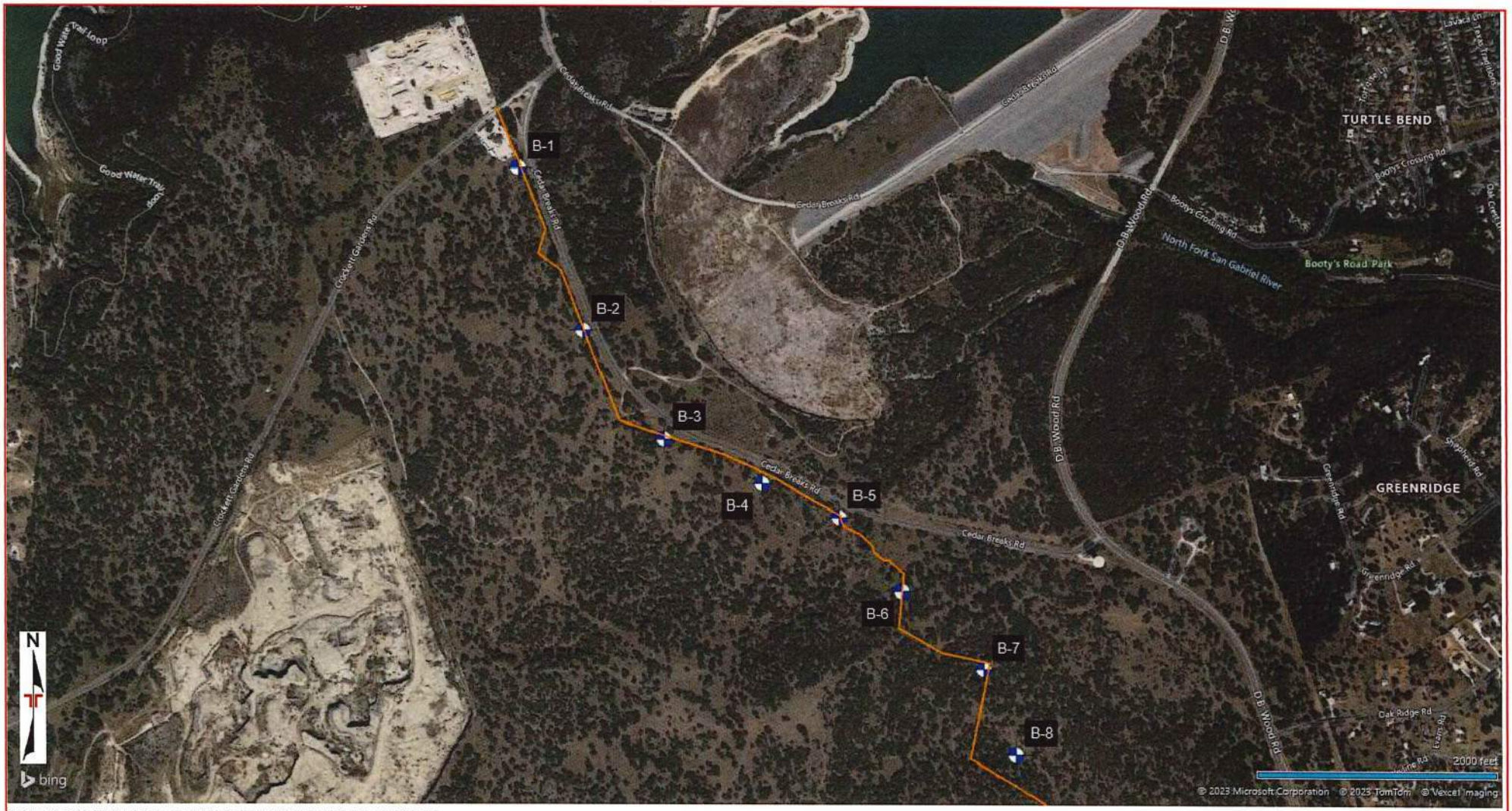

DIAGRAM IS FOR GENERAL LOCATION ONLY, AND IS NOT INTENDED FOR CONSTRUCTION PURPOSES

MAP PROVIDED BY MICROSOFT BING MAPS

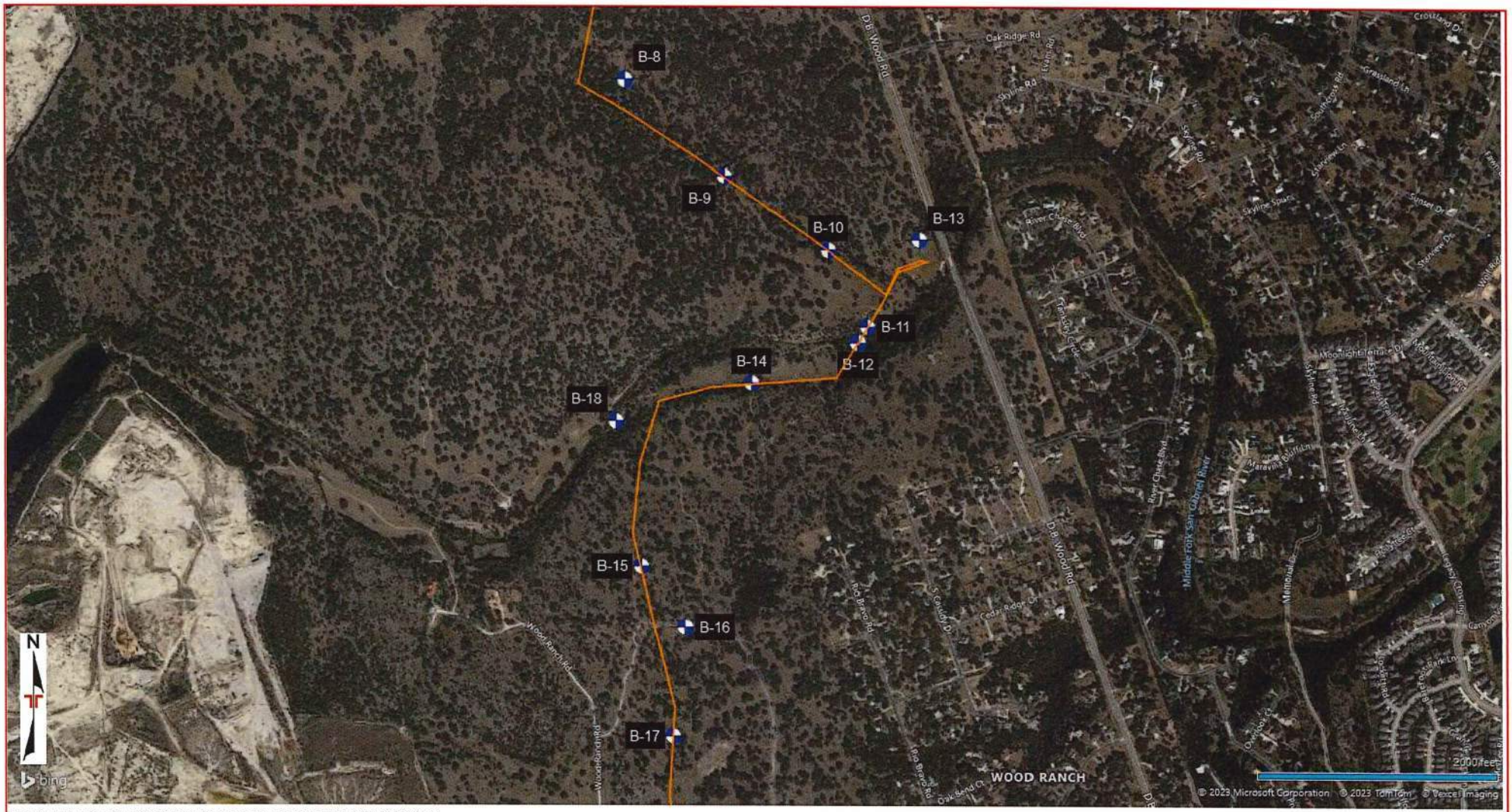

DIAGRAM IS FOR GENERAL LOCATION ONLY, AND IS NOT INTENDED FOR CONSTRUCTION PURPOSES

MAP PROVIDED BY MICROSOFT BING MAPS

DIAGRAM IS FOR GENERAL LOCATION ONLY, AND IS NOT INTENDED FOR CONSTRUCTION PURPOSES

MAP PROVIDED BY MICROSOFT BING MAPS

Exploration and Laboratory Results

Contents:

Boring Logs B-1 through B-24 (26 Pages)
Grain Size Distribution (2 Pages)
Atterberg Limits

Note: All attachments are one page unless noted above.

City of Georgetown - SLWTP to SFI
Crockett Gardens Rd. to Southwest Byp. | Georgetown, TX
Terracon Project No. 96215381

Terracon
5307 Industrial Oaks Blvd Ste 160
Austin, TX

Boring Log No. B-1

Location: See Exploration Plan

Latitude: 30.6656° Longitude: -97.7386°

Model Layer	Graphic Log	Depth (Ft.)	Elevation: 906.0 (Ft.) +/-	Depth (Ft.)	Water Level Observations	Sample Type	Field Test Results	RECOVERY (%) / RQD (%)	Strength Test: Test Type	Strength Test: Compressive Strength (tsf)	Strength Test: Strain (%)	Water Content (%)	Dry Unit Weight (pcf)	Atterberg Limits: LL-PL-PI	Percent Fines
1		1.0	**CLAYEY GRAVEL WITH SAND (GC)**, pale brown, very dense, with limestone fragments — 905				50/4"								
2			**LIMESTONE (EDWARDS GROUP)**, pale brown, moderately fractured					86/67	UC	630.38		0.2	173		
				5				83/60							
			- highly fractured, with vugs and dolomitic seams below ~9½ feet	10				82/38	UC	303.09		1.3	154		
				15				82/42							
		20.0	886	20											
			Boring Terminated at 20 Feet												

See Exploration and Testing Procedures for a description of field and laboratory procedures used and additional data (If any).

See Supporting Information for explanation of symbols and abbreviations.

Notes

Elevation Reference: Elevations were interpolated from a topographic site plan.

Water Level Observations
No free water observed during augering

Advancement Method
Dry Augered to 2 feet; Mud Rotary thereafter

Abandonment Method
Boring backfilled with Auger Cuttings and/or Bentonite

Drill Rig
Mobile B-57

Hammer Type
Automatic

Driller
Texas Geo Bore

Logged by
Rick / Cobey

Boring Started
09-02-2023

Boring Completed
09-02-2023

City of Georgetown - SLWTP to SFI
Crockett Gardens Rd. to Southwest Byp. | Georgetown, TX
Terracon Project No. 96215381

Terracon
5307 Industrial Oaks Blvd Ste 160
Austin, TX

Boring Log No. B-2

Location: See Exploration Plan
Latitude: 30.6619° Longitude: -97.7369°
Depth (Ft.) Elevation: 905.0 (Ft.) +/-

Model Layer	Graphic Log	Description	Depth (Ft.)	Elevation	Water Level Observations	Sample Type	Field Test Results	RECOVERY (%) / RQD (%)	Strength Test: Test Type	Strength Test: Compressive Strength (tsf)	Strength Test: Strain (%)	Water Content (%)	Dry Unit Weight (pcf)	Atterberg Limits: LL-PL-PI	Percent Fines
1		**GRAVELLY LEAN CLAY (CL)**, brown, very stiff	2.0	903			6-6-13 N=19					17.3			
1		**CLAYEY GRAVEL WITH SAND (GC)**, pale brown to light gray, very dense, with limestone fragments	4.0	901			17-26-40 N=66					4.0			
2		**LIMESTONE (EDWARDS GROUP)**, pale brown to light gray, moderately to highly fractured, with vugs and chert seams	5					100/0							
2								90/48	UC	332.39		0.3	167		
2			10					58/50							
2			15					93/70	UC	514.91		1.1	158		
2		**LIMESTONE (EDWARDS GROUP)**, brown, moderately fractured, with sandy/silty seams	18.0	887											
			20.0	885											
		Boring Terminated at 20 Feet	20												

See Exploration and Testing Procedures for a description of field and laboratory procedures used and additional data (If any).

See Supporting Information for explanation of symbols and abbreviations.

Notes

Elevation Reference: Elevations were interpolated from a topographic site plan.

Water Level Observations
No free water observed during augering

Advancement Method
Dry Augered to 4 feet; Mud Rotary thereafter

Abandonment Method
Boring backfilled with Auger Cuttings and/or Bentonite

Drill Rig
Mobile B-57

Hammer Type
Automatic

Driller
Texas Geo Bore

Logged by
Rick / Cobey

Boring Started
09-02-2023

Boring Completed
09-02-2023

City of Georgetown - SLWTP to SFI
Crockett Gardens Rd. to Southwest Byp. | Georgetown, TX
Terracon Project No. 96215381

Terracon
5307 Industrial Oaks Blvd Ste 160
Austin, TX

Boring Log No. B-3

Location: See Exploration Plan
Latitude: 30.6594° Longitude: -97.7347°

Depth (Ft.)	Elevation: 894.0 (Ft.) +/-	Model Layer	Field Test Results	RECOVERY (%) / RQD (%)	Test Type	Compressive Strength (tsf)	Strain (%)	Water Content (%)	Dry Unit Weight (pcf)	Atterberg Limits LL-PL-PI	Percent Fines
2.0	**FAT CLAY WITH GRAVEL (CH)**, brown, very stiff	1	9-11-10 N=21					10.2		60-18-42	81
892	**LIMESTONE (EDWARDS GROUND)**, pale brown, moderately to highly fractured, with vugs and reddish brown clayey seams	2	15-50/1"	100/88	UC	185.60		2.5	135		
5				67/35							
10	- dolomitic seams from ~10 to 11 feet			93/58	UC	236.59		0.8	141		
14.0 / 880	**LIMESTONE (EDWARDS GROUP)**, brown to light brown, moderately to highly fractured, with sandy/silty seams and shell fragments										
15				97/73							
20				95/53	UC	194.79		1.5	141		
25	- dolomitic seam at ~28 feet			90/23							
30.0 / 864	***Boring Terminated at 30 Feet***										

See Exploration and Testing Procedures for a description of field and laboratory procedures used and additional data (If any).

See Supporting Information for explanation of symbols and abbreviations.

Notes

Elevation Reference: Elevations were interpolated from a topographic site plan.

Water Level Observations
No free water observed during augering

Advancement Method
Dry Augered to 3 feet; Mud Rotary thereafter

Abandonment Method
Boring backfilled with Auger Cuttings and/or Bentonite

Drill Rig
Mobile B-57

Hammer Type
Automatic

Driller
Texas Geo Bore

Logged by
Rick / Cobey

Boring Started
09-03-2023

Boring Completed
09-03-2023

City of Georgetown - SLWTP to SFI
Crockett Gardens Rd. to Southwest Byp. | Georgetown, TX
Terracon Project No. 96215381

Terracon
5307 Industrial Oaks Blvd Ste 160
Austin, TX

Boring Log No. B-4

Location: See Exploration Plan

Latitude: 30.6584° Longitude: -97.7321°

Depth (Ft.) Elevation: 845.0 (Ft.) +/-

Model Layer	Graphic Log	Depth (Ft.)	Water Level Observations	Sample Type	Field Test Results	RECOVERY (%) / RQD (%)	Strength Test: Test Type	Strength Test: Compressive Strength (tsf)	Strength Test: Strain (%)	Water Content (%)	Dry Unit Weight (pcf)	Atterberg Limits: LL-PL-PI	Percent Fines
1		1.0 (844) **CLAYEY GRAVEL WITH SAND (GC)**, light gray to pale brown, very dense, with limestone fragments			13-50/3"								
2		**LIMESTONE (EDWARDS GROUP)**, pale brown, highly fractured, with vugs and reddish brown clayey seams				85/46	UC	127.53		1.9	128		
		5				75/47							
		10				77/37	UC	159.70		1.9	133		
		15 - slightly to moderately fractured below ~15 feet				98/87							
		20				85/57	UC	319.30		3.4	148		
		25				98/90							
		30.0 (815)											
		Boring Terminated at 30 Feet											

See Exploration and Testing Procedures for a description of field and laboratory procedures used and additional data (If any).

See Supporting Information for explanation of symbols and abbreviations.

Notes

Elevation Reference: Elevations were interpolated from a topographic site plan.

Water Level Observations
No free water observed during augering

Advancement Method
Dry Augered to 1 foot; Mud Rotary thereafter

Abandonment Method
Boring backfilled with Auger Cuttings and/or Bentonite

Drill Rig
Mobile B-57

Hammer Type
Automatic

Driller
Texas Geo Bore

Logged by
Rick / Cobey

Boring Started
09-05-2023

Boring Completed
09-05-2023

City of Georgetown - SLWTP to SFI
Crockett Gardens Rd. to Southwest Byp. | Georgetown, TX
Terracon Project No. 96215381

Terracon
5307 Industrial Oaks Blvd Ste 160
Austin, TX

Boring Log No. B-5

Location: See Exploration Plan
Latitude: 30.6576° Longitude: -97.7301°
Depth (Ft.) Elevation: 812.0 (Ft.) +/-

Model Layer	Graphic Log	Depth (Ft.)	Water Level Observations	Sample Type	Field Test Results	RECOVERY (%) / RQD (%)	Strength Test: Test Type	Strength Test: Compressive Strength (tsf)	Strength Test: Strain (%)	Water Content (%)	Dry Unit Weight (pcf)	Atterberg Limits: LL-PL-PI	Percent Fines
1	**CLAYEY GRAVEL WITH SAND (GC)**, light gray to pale brown, medium dense, with limestone fragments (2.0, 810)				10-10-10 N=20					6.5			
2	**LIMESTONE (EDWARDS GROUP)**, pale brown to light gray, highly fractured, with vugs				50/2"								
		5				75/23	UC	167.64		1.8	137		
	- frequent clayey seams/layers from ~10 to 15 feet	10				35/35							
		15				73/18	UC	109.53		0.5	149		
		20				58/45							
	- void from ~28 to 29 feet	25				83/62	UC	163.50		3.4	130		
	- frequent clayey seams/layers from ~30 to 35 feet	30											

See Exploration and Testing Procedures for a description of field and laboratory procedures used and additional data (If any).

See Supporting Information for explanation of symbols and abbreviations.

Notes

Elevation Reference: Elevations were interpolated from a topographic site plan.

Water was observed at ~27 feet upon restart of boring the next day. Water was then observed at ~31 feet upon completion of drilling.

Water Level Observations
No free water observed during augering

Advancement Method
Dry Augered to 5 feet; Mud Rotary thereafter

Abandonment Method
Boring backfilled with Auger Cuttings and/or Bentonite

Drill Rig
Mobile B-57

Hammer Type
Automatic

Driller
Texas Geo Bore

Logged by
Rick / Cobey

Boring Started
09-07-2023

Boring Completed
09-08-2023

Terracon
5307 Industrial Oaks Blvd Ste 160
Austin, TX

Boring Log No. B-5

Location: See Exploration Plan

Latitude: 30.6576° Longitude: -97.7301°

Depth (Ft.) Elevation: 812.0 (Ft.) +/-

Model Layer	Graphic Log	Description	Depth (Ft.)	Water Level Observations	Sample Type	Field Test Results	RECOVERY (%) / RQD (%)	Strength Test: Test Type	Strength Test: Compressive Strength (tsf)	Strength Test: Strain (%)	Water Content (%)	Dry Unit Weight (pcf)	Atterberg Limits: LL-PL-PI	Percent Fines
2		**LIMESTONE (EDWARDS GROUP)**, pale brown to light gray, highly fractured, with vugs *(continued)*					45/15							
		35.0 777	35											
		LIMESTONE (EDWARDS GROUP), brown to light brown, highly fractured, with sandy/silty seams					97/42	UC	239.86		0.8	155		
			40				100/33	UC	252.40		1.1	153		
		45.0 767	45											
		Boring Terminated at 45 Feet												

See Exploration and Testing Procedures for a description of field and laboratory procedures used and additional data (If any).

See Supporting Information for explanation of symbols and abbreviations.

Notes

Elevation Reference: Elevations were interpolated from a topographic site plan.

Water was observed at ~27 feet upon restart of boring the next day. Water was then observed at ~31 feet upon completion of drilling.

Water Level Observations
No free water observed during augering

Advancement Method
Dry Augered to 5 feet; Mud Rotary thereafter

Abandonment Method
Boring backfilled with Auger Cuttings and/or Bentonite

Drill Rig
Mobile B-57

Hammer Type
Automatic

Driller
Texas Geo Bore

Logged by
Rick / Cobey

Boring Started
09-07-2023

Boring Completed
09-08-2023

City of Georgetown - SLWTP to SFI
Crockett Gardens Rd. to Southwest Byp. | Georgetown, TX
Terracon Project No. 96215381

Terracon
5307 Industrial Oaks Blvd Ste 160
Austin, TX

Boring Log No. B-6

Location: See Exploration Plan

Latitude: 30.6559° Longitude: -97.7284°

Depth (Ft.) Elevation: 839.0 (Ft.) +/-

Model Layer	Graphic Log	Description	Depth (Ft.)	Water Level Observations	Sample Type	Field Test Results	RECOVERY (%) / RQD (%)	Strength Test: Test Type	Strength Test: Compressive Strength (tsf)	Strength Test: Strain (%)	Water Content (%)	Dry Unit Weight (pcf)	Atterberg Limits: LL-PL-PI	Percent Fines
1		**GRAVELLY LEAN CLAY (CL)**, brown, hard, with limestone fragments				13-50/4"					5.2		41-18-23	63
		2.0 837												
2		**LIMESTONE (EDWARDS GROUP)**, pale brown to light gray, moderately to highly fractured, with vugs and reddish brown clayey seams				50/1"								
			5				77/32	UC	36.18		1.2	147		
			10				83/65							
		15.0 824	15											
		Boring Terminated at 15 Feet												

See Exploration and Testing Procedures for a description of field and laboratory procedures used and additional data (If any).

See Supporting Information for explanation of symbols and abbreviations.

Notes

Elevation Reference: Elevations were interpolated from a topographic site plan.

Water Level Observations
No free water observed during augering

Advancement Method
Dry Augered to 5 feet; Mud Rotary thereafter

Abandonment Method
Boring backfilled with Auger Cuttings and/or Bentonite

Drill Rig
Mobile B-57

Hammer Type
Automatic

Driller
Texas Geo Bore

Logged by
Rick / Cobey

Boring Started
09-06-2023

Boring Completed
09-06-2023

City of Georgetown - SLWTP to SFI
Crockett Gardens Rd. to Southwest Byp. | Georgetown, TX
Terracon Project No. 96215381

Terracon
5307 Industrial Oaks Blvd Ste 160
Austin, TX

Boring Log No. B-7

Location: See Exploration Plan

Latitude: 30.6541° Longitude: -97.7263°

Depth (Ft.) Elevation: 840.0 (Ft.) +/-

Model Layer	Graphic Log	Description	Depth (Ft.)	Water Level Observations	Sample Type	Field Test Results	RECOVERY (%) / RQD (%)	Strength Test: Test Type	Strength Test: Compressive Strength (tsf)	Strength Test: Strain (%)	Water Content (%)	Dry Unit Weight (pcf)	Atterberg Limits: LL-PL-PI	Percent Fines
1		**LEAN CLAY WITH SAND (CL)**, brown, hard, with limestone fragments				13-50/5"					12.5			
		2.0 838												
2		**LIMESTONE (EDWARDS GROUP)**, pale brown to light gray, highly fractured, with vugs and reddish brown clayey seams				50/1"								
			5				60/37							
			10				35/0	UC						
			15				47/35							
		20.0 820	20											
		Boring Terminated at 20 Feet												

See Exploration and Testing Procedures for a description of field and laboratory procedures used and additional data (If any).

See Supporting Information for explanation of symbols and abbreviations.

Notes

Elevation Reference: Elevations were interpolated from a topographic site plan.

Water Level Observations
No free water observed during augering

Advancement Method
Dry Augered to 5 feet; Mud Rotary thereafter

Abandonment Method
Boring backfilled with Auger Cuttings and/or Bentonite

Drill Rig
Mobile B-57

Hammer Type
Automatic

Driller
Texas Geo Bore

Logged by
Rick / Cobey

Boring Started
09-05-2023

Boring Completed
09-05-2023

City of Georgetown - SLWTP to SFI
Crockett Gardens Rd. to Southwest Byp. | Georgetown, TX
Terracon Project No. 96215381

Terracon
5307 Industrial Oaks Blvd Ste 160
Austin, TX

Boring Log No. B-8

Location: See Exploration Plan
Latitude: 30.6522° Longitude: -97.7254°

Depth (Ft.)	Elevation: 829.0 (Ft.) +/-
1.5	827.5
25.0	804

Model Layer	Graphic Log	Description	Depth (Ft.)	Water Level Observations	Sample Type	Field Test Results	RECOVERY (%) / RQD (%)	Strength Test: Test Type	Strength Test: Compressive Strength (tsf)	Strength Test: Strain (%)	Water Content (%)	Dry Unit Weight (pcf)	Atterberg Limits: LL-PL-PI	Percent Fines
1		**GRAVELLY LEAN CLAY (CL)**, brown, hard, with limestone fragments				11-16-50/4"					14.9			
2		**LIMESTONE (EDWARDS GROUP)**, pale brown to light gray, moderately to highly fractured, with vugs				50/1"								
		- void from ~5½ to 6 feet	5				40/20	UC	527.45		0.6	155		
		- void from ~8 to 9 feet	10				78/62							
		- extremely fractured, with frequent clayey seams/layers from ~15 to 20 feet	15				38/10	UC	216.13		0.7	148		
			20				93/53							
		Boring Terminated at 25 Feet	25											

See Exploration and Testing Procedures for a description of field and laboratory procedures used and additional data (If any).

See Supporting Information for explanation of symbols and abbreviations.

Notes
Elevation Reference: Elevations were interpolated from a topographic site plan.

Water Level Observations
No free water observed during augering

Advancement Method
Dry Augered to 5 feet; Mud Rotary thereafter

Abandonment Method
Boring backfilled with Auger Cuttings and/or Bentonite

Drill Rig
Mobile B-57

Hammer Type
Automatic

Driller
Texas Geo Bore

Logged by
Rick / Cobey

Boring Started
09-05-2023

Boring Completed
09-05-2023

City of Georgetown - SLWTP to SFI
Crockett Gardens Rd. to Southwest Byp. | Georgetown, TX
Terracon Project No. 96215381

Terracon
5307 Industrial Oaks Blvd Ste 160
Austin, TX

Boring Log No. B-9

Location: See Exploration Plan
Latitude: 30.6500° Longitude: -97.7228°

Depth (Ft.)	Elevation: 814.0 (Ft.) +/-	Model Layer	Field Test Results	RECOVERY (%) / RQD (%)	Test Type	Compressive Strength (tsf)	Strain (%)	Water Content (%)	Dry Unit Weight (pcf)	Atterberg Limits LL-PL-PI	Percent Fines
2.5	**SANDY LEAN CLAY WITH GRAVEL (CL)**, brown, very stiff	1	11-17-12 N=29					10.4			
2.5	**LIMESTONE (EDWARDS GROUP)**, pale brown to light gray, highly fractured, with vugs	2	50/3"								
5				82 / 43	UC	590.27		1.0	159		
10				95 / 28							
15				77 / 45	UC	266.80		0.5	148		
20	- moderately fractured below ~20 feet			97 / 62							
25.0	***Boring Terminated at 25 Feet***										

See Exploration and Testing Procedures for a description of field and laboratory procedures used and additional data (If any).

See Supporting Information for explanation of symbols and abbreviations.

Notes

Elevation Reference: Elevations were interpolated from a topographic site plan.

Water Level Observations
No free water observed during augering

Advancement Method
Dry Augered to 5 feet; Mud Rotary thereafter

Abandonment Method
Boring backfilled with Auger Cuttings and/or Bentonite

Drill Rig
Mobile B-57

Hammer Type
Automatic

Driller
Texas Geo Bore

Logged by
Rick / Cobey

Boring Started
09-05-2023

Boring Completed
09-05-2023

City of Georgetown - SLWTP to SFI
Crockett Gardens Rd. to Southwest Byp. | Georgetown, TX
Terracon Project No. 96215381

Terracon
5307 Industrial Oaks Blvd Ste 160
Austin, TX

Boring Log No. B-10

Location: See Exploration Plan
Latitude: 30.6483° Longitude: -97.7200°
Depth (Ft.) Elevation: 792.0 (Ft.) +/-

Model Layer	Graphic Log	Description	Depth (Ft.)	Elevation	Field Test Results	RECOVERY (%) / RQD (%)	Strength Test: Test Type	Strength Test: Compressive Strength (tsf)	Strength Test: Strain (%)	Water Content (%)	Dry Unit Weight (pcf)	Atterberg Limits LL-PL-PI	Percent Fines
1		**CLAYEY GRAVEL WITH SAND (GC)**, brown, very dense, with limestone fragments			34-50/4"					10.0			
					18-26-50/2"					15.8		69-22-47	48
		4.0		788									
2		**LIMESTONE (EDWARDS GROUP)**, pale brown to light gray, highly fractured, with vugs			50/3"								
			5			60 / 27							
			10										
		12.0		780									
		LIMESTONE (EDWARDS GROUP), brown to light brown, highly fractured, with vugs and sandy/silty seams				85 / 33	UC	527.33		1.0	155		
			15			97 / 72							
		19.0		773									
		LIMESTONE (EDWARDS GROUP), light gray, slightly to moderately fractured	20			100 / 100	UC	304.47		0.7	167		
			25			72 / 55							
		30.0	30	762									
		Boring Terminated at 30 Feet											

See Exploration and Testing Procedures for a description of field and laboratory procedures used and additional data (If any).

See Supporting Information for explanation of symbols and abbreviations.

Notes

Elevation Reference: Elevations were interpolated from a topographic site plan.

Water Level Observations
No free water observed during augering

Advancement Method
Dry Augered to 5 feet; Mud Rotary thereafter

Abandonment Method
Boring backfilled with Auger Cuttings and/or Bentonite

Drill Rig
Mobile B-57

Hammer Type
Automatic

Driller
Texas Geo Bore

Logged by
Rick / Cobey

Boring Started
09-03-2023

Boring Completed
09-03-2023

City of Georgetown - SLWTP to SFI
Crockett Gardens Rd. to Southwest Byp. | Georgetown, TX
Terracon Project No. 96215381

Terracon
5307 Industrial Oaks Blvd Ste 160
Austin, TX

Boring Log No. B-11

Location: See Exploration Plan
Latitude: 30.6465° Longitude: -97.7190°

Model Layer	Graphic Log	Depth (Ft.)	Elevation: 762.0 (Ft.) +/-	Depth (Ft.)	Water Level Observations	Sample Type	Field Test Results	RECOVERY (%) / RQD (%)	Strength Test: Test Type	Strength Test: Compressive Strength (tsf)	Strength Test: Strain (%)	Water Content (%)	Dry Unit Weight (pcf)	Atterberg Limits: LL-PL-PI	Percent Fines
1			**FAT CLAY WITH SAND (CH)**, brown, very stiff				3-9-9 N=18					12.5			
		3.0	759				16-50/4"								
2			**LIMESTONE (EDWARDS GROUP)**, pale brown, extremely fractured, with frequent clayey seams/layers	5				33 / 10							
		9.0	753												
			LIMESTONE (EDWARDS GROUP), light gray, moderately fractured	10				100 / 55	UC	181.05		1.0	161		
				15				100 / 77							
				20				100 / 52	UC	102.80		1.5	161		
		25.0	737	25											
			Boring Terminated at 25 Feet												

See Exploration and Testing Procedures for a description of field and laboratory procedures used and additional data (If any).

See Supporting Information for explanation of symbols and abbreviations.

Notes

Elevation Reference: Elevations were interpolated from a topographic site plan.

Water Level Observations
No free water observed during augering

Advancement Method
Dry Augered to 5 feet; Mud Rotary thereafter

Abandonment Method
Boring backfilled with Auger Cuttings and/or Bentonite

Drill Rig
Mobile B-57

Hammer Type
Automatic

Driller
Texas Geo Bore

Logged by
Rick / Cobey

Boring Started
08-28-2023

Boring Completed
08-28-2023

City of Georgetown - SLWTP to SFI
Crockett Gardens Rd. to Southwest Byp. | Georgetown, TX
Terracon Project No. 96215381

Terracon
5307 Industrial Oaks Blvd Ste 160
Austin, TX

Boring Log No. B-12

Location: See Exploration Plan
Latitude: 30.6462° Longitude: -97.7193°
Depth (Ft.) Elevation: 761.0 (Ft.) +/-

Model Layer	Graphic Log	Description	Depth (Ft.)	Elevation	Water Level Observations	Sample Type	Field Test Results	RECOVERY (%) / RQD (%)	Strength Test: Test Type	Strength Test: Compressive Strength (tsf)	Strength Test: Strain (%)	Water Content (%)	Dry Unit Weight (pcf)	Atterberg Limits: LL-PL-PI	Percent Fines
1		**FAT CLAY WITH SAND (CH)**, dark brown to brown, very stiff	2.0	759			4-6-9 N=15					7.5		63-24-39	75
1		**CLAYEY SAND WITH GRAVEL (SC)**, light brown to pale brown, medium dense to dense					12-11-14 N=25					1.9			
1			5				12-12-18 N=30					3.5			
1							15-16-17 N=33					4.5			
1		- with limestone fragments below ~8 feet					17-19-22 N=41								
2		**LIMESTONE (EDWARDS GROUP)**, light gray, highly fractured, with marly and clayey seams	10.0	751				93/23	UC	48.30		1.3	165		
2			15					90/13							
2			20					93/13	UC	54.40		2.0	144		
		Boring Terminated at 25 Feet	25.0	736											

See Exploration and Testing Procedures for a description of field and laboratory procedures used and additional data (If any).

See Supporting Information for explanation of symbols and abbreviations.

Notes

Elevation Reference: Elevations were interpolated from a topographic site plan.

Water Level Observations
No free water observed during augering

Advancement Method
Dry Augered to 10 feet; Mud Rotary thereafter

Abandonment Method
Boring backfilled with Auger Cuttings and/or Bentonite

Drill Rig
Mobile B-57

Hammer Type
Automatic

Driller
Texas Geo Bore

Logged by
Rick / Cobey

Boring Started
09-02-2023

Boring Completed
09-02-2023

City of Georgetown - SLWTP to SFI
Crockett Gardens Rd. to Southwest Byp. | Georgetown, TX
Terracon Project No. 96215381

Terracon
5307 Industrial Oaks Blvd Ste 160
Austin, TX

Boring Log No. B-13

Location: See Exploration Plan
Latitude: 30.6485° Longitude: -97.7176°

Depth (Ft.) Elevation: 767.0 (Ft.) +/-

Model Layer	Graphic Log	Description	Depth (Ft.)	Elevation	Water Level Observations	Sample Type	Field Test Results	RECOVERY (%) / RQD (%)	Strength Test: Test Type	Strength Test: Compressive Strength (tsf)	Strength Test: Strain (%)	Water Content (%)	Dry Unit Weight (pcf)	Atterberg Limits LL-PL-PI	Percent Fines
1		**LEAN CLAY WITH SAND (CL)**, dark brown to brown, hard	2.0	765			2-16-22 N=38								
1		**CLAYEY GRAVEL WITH SAND (GC)**, pale brown, dense, with limestone fragments	5.0	762			18-21-17 N=38					6.7			
2		**LIMESTONE (EDWARDS GROUP)**, pale brown to light gray, moderately fractured	5					88/77	UC	201.31		1.1	161		
2			10					95/45							
2			15					100/73	UC	478.46		1.3	166		
2		- marly seam from ~23 to 25½ feet	20					100/67							
2			25					97/78	UC	256.87		1.7	164		
2			30												

See Exploration and Testing Procedures for a description of field and laboratory procedures used and additional data (If any).

See Supporting Information for explanation of symbols and abbreviations.

Water Level Observations
No free water observed during augering

Drill Rig
Mobile B-57

Hammer Type
Automatic

Driller
Texas Geo Bore

Logged by
Rick / Cobey

Boring Started
08-28-2023

Boring Completed
08-29-2023

Notes

Elevation Reference: Elevations were interpolated from a topographic site plan.

Water was observed at ~16 feet upon restart of boring the next day. Water was then observed at ~36 feet upon completion of drilling.

Advancement Method
Dry Augered to 6 feet; Mud Rotary thereafter

Abandonment Method
Boring converted to Piezometer upon completion

Terracon
5307 Industrial Oaks Blvd Ste 160
Austin, TX

Boring Log No. B-13

Location: See Exploration Plan

Latitude: 30.6485° Longitude: -97.7176°

Depth (Ft.) Elevation: 767.0 (Ft.) +/-

Model Layer	Graphic Log	Description	Depth (Ft.)	Water Level Observations	Sample Type	Field Test Results	RECOVERY (%) / RQD (%)	Strength Test: Test Type	Strength Test: Compressive Strength (tsf)	Strength Test: Strain (%)	Water Content (%)	Dry Unit Weight (pcf)	Atterberg Limits: LL-PL-PI	Percent Fines
2		**LIMESTONE (EDWARDS GROUP)**, pale brown to light gray, moderately fractured *(continued)*					97/67							
		- highly to extremely fractured, with marly seams below ~35 feet	35				90/0	UC	110.92		1.6	164		
			40				93/0	UC	366.25		2.2	164		
			45				83/30	UC	147.41		2.3	163		
		50.0 717	50											
		Boring Terminated at 50 Feet												

See Exploration and Testing Procedures for a description of field and laboratory procedures used and additional data (If any).

See Supporting Information for explanation of symbols and abbreviations.

Notes

Elevation Reference: Elevations were interpolated from a topographic site plan.

Water was observed at ~16 feet upon restart of boring the next day. Water was then observed at ~36 feet upon completion of drilling.

Water Level Observations
No free water observed during augering

Advancement Method
Dry Augered to 6 feet; Mud Rotary thereafter

Abandonment Method
Boring converted to Piezometer upon completion

Drill Rig
Mobile B-57

Hammer Type
Automatic

Driller
Texas Geo Bore

Logged by
Rick / Cobey

Boring Started
08-28-2023

Boring Completed
08-29-2023

City of Georgetown - SLWTP to SFI
Crockett Gardens Rd. to Southwest Byp. | Georgetown, TX
Terracon Project No. 96215381

Terracon
5307 Industrial Oaks Blvd Ste 160
Austin, TX

Boring Log No. B-14

Location: See Exploration Plan
Latitude: 30.6452° Longitude: -97.7221°

Model Layer	Graphic Log	Depth (Ft.)	Elevation: 774.0 (Ft.) +/-	Depth (Ft.)	Water Level Observations	Sample Type	Field Test Results	RECOVERY (%) RQD (%)	Strength Test: Test Type	Strength Test: Compressive Strength (tsf)	Strength Test: Strain (%)	Water Content (%)	Dry Unit Weight (pcf)	Atterberg Limits: LL-PL-PI	Percent Fines
1			**CLAYEY GRAVEL WITH SAND (GC)**, brown to gray, medium dense to dense				10-19-23 N=42					6.2			
							9-11-13 N=24					13.4		60-22-38	46
				5			14-19-21 N=40					16.6			
		6.0	768												
			CLAYEY GRAVEL WITH SAND (GC), brown to light brown, medium dense to dense, with limestone fragments				10-12-16 N=28					10.7		39-16-23	20
							13-16-19 N=35					7.8			
				10											
		11.0	763												
2			**LIMESTONE (EDWARDS GROUP)**, pale brown to light gray, highly fractured					75/22							
		15.0	759	15											
			Boring Terminated at 15 Feet												

See Exploration and Testing Procedures for a description of field and laboratory procedures used and additional data (If any).

See Supporting Information for explanation of symbols and abbreviations.

Notes

Elevation Reference: Elevations were interpolated from a topographic site plan.

Water Level Observations
No free water observed during augering

Advancement Method
Dry Augered to 12 feet; Mud Rotary thereafter

Abandonment Method
Boring backfilled with Auger Cuttings and/or Bentonite

Drill Rig
Mobile B-57

Hammer Type
Automatic

Driller
Texas Geo Bore

Logged by
Rick / Cobey

Boring Started
09-02-2023

Boring Completed
09-02-2023

City of Georgetown - SLWTP to SFI
Crockett Gardens Rd. to Southwest Byp. | Georgetown, TX
Terracon Project No. 96215381

Terracon
5307 Industrial Oaks Blvd Ste 160
Austin, TX

Boring Log No. B-15

Location: See Exploration Plan

Latitude: 30.6410° Longitude: -97.7250°

Depth (Ft.) Elevation: 875.0 (Ft.) +/-

Model Layer	Graphic Log	Description	Elevation	Depth (Ft.)	Water Level Observations	Sample Type	Field Test Results	RECOVERY (%) / RQD (%)	Strength Test: Test Type	Strength Test: Compressive Strength (tsf)	Strength Test: Strain (%)	Water Content (%)	Dry Unit Weight (pcf)	Atterberg Limits: LL-PL-PI	Percent Fines
1		1.0 **CLAYEY GRAVEL WITH SAND (GC)**, pale brown, very dense, with limestone fragments	874				50/6"					1.7			
2		**LIMESTONE (EDWARDS GROUP)**, pale brown to light gray, moderately fractured, with vugs, reddish brown clayey seams, and possible voids					50/1"					19.1			
				5				57/32	UC	416.14		1.0	164		
				10				62/48							
		15.0	860	15											
		Boring Terminated at 15 Feet													

See Exploration and Testing Procedures for a description of field and laboratory procedures used and additional data (If any).

See Supporting Information for explanation of symbols and abbreviations.

Notes

Elevation Reference: Elevations were interpolated from a topographic site plan.

Water Level Observations
No free water observed during augering

Advancement Method
Dry Augered to 5 feet; Mud Rotary thereafter

Abandonment Method
Boring backfilled with Auger Cuttings and/or Bentonite

Drill Rig
Mobile B-57

Hammer Type
Automatic

Driller
Texas Geo Bore

Logged by
Rick / Cobey

Boring Started
09-03-2023

Boring Completed
09-03-2023

City of Georgetown - SLWTP to SFI
Crockett Gardens Rd. to Southwest Byp. | Georgetown, TX
Terracon Project No. 96215381

Terracon
5307 Industrial Oaks Blvd Ste 160
Austin, TX

Boring Log No. B-16

Location: See Exploration Plan

Latitude: 30.6396° Longitude: -97.7238°

Depth (Ft.) Elevation: 887.0 (Ft.) +/-

Model Layer	Graphic Log	Description	Depth (Ft.)	Water Level Observations	Sample Type	Field Test Results	RECOVERY (%) / RQD (%)	Strength Test: Test Type	Strength Test: Compressive Strength (tsf)	Strength Test: Strain (%)	Water Content (%)	Dry Unit Weight (pcf)	Atterberg Limits: LL-PL-PI	Percent Fines
1		**CLAYEY GRAVEL WITH SAND (GC)**, pale brown, very dense, with limestone fragments				14-50/1"					5.2			
		2.0 885												
2		**LIMESTONE (EDWARDS GROUP)**, pale brown to light gray, highly fractured, with vugs and possible voids				50/4"								
			5				73/7							
			10				73/42	UC	174.93		0.9	154		
		- moderately fractured below ~15 feet	15				87/68							
		19.0 868												
		LIMESTONE (EDWARDS GROUP), brown to light brown, highly fractured, with vugs and sandy/silty seams	20				88/18	UC	279.88		1.6	149		
		25.0 862	25											
		Boring Terminated at 25 Feet												

See Exploration and Testing Procedures for a description of field and laboratory procedures used and additional data (If any).

See Supporting Information for explanation of symbols and abbreviations.

Notes

Elevation Reference: Elevations were interpolated from a topographic site plan.

Water Level Observations
No free water observed during augering

Advancement Method
Dry Augered to 5 feet; Mud Rotary thereafter

Abandonment Method
Boring backfilled with Auger Cuttings and/or Bentonite

Drill Rig
Mobile B-57

Hammer Type
Automatic

Driller
Texas Geo Bore

Logged by
Rick / Cobey

Boring Started
09-02-2023

Boring Completed
09-02-2023

City of Georgetown - SLWTP to SFI
Crockett Gardens Rd. to Southwest Byp. | Georgetown, TX
Terracon Project No. 96215381

Terracon
5307 Industrial Oaks Blvd Ste 160
Austin, TX

Boring Log No. B-17

Location: See Exploration Plan
Latitude: 30.6371° Longitude: -97.7242°
Depth (Ft.) Elevation: 901.0 (Ft.) +/-

Model Layer	Graphic Log	Description	Depth (Ft.)	Water Level Observations	Sample Type	Field Test Results	RECOVERY (%) / RQD (%)	Strength Test: Test Type	Strength Test: Compressive Strength (tsf)	Strength Test: Strain (%)	Water Content (%)	Dry Unit Weight (pcf)	Atterberg Limits: LL-PL-PI	Percent Fines
1		**FAT CLAY (CH)**, brown, hard				4.5 tsf (HP)					9.2		59-22-37	97
		2.0 899												
2		**LIMESTONE (EDWARDS GROUP)**, pale brown to light gray, highly fractured, with frequent clayey seams/layers				50/5"					3.1			
			5											
		- void from ~6 to 8 feet					33/33	UC	613.85		0.5	171		
			10											
		- chert seams from ~10 to 13 feet												
		- void from ~13 to 15 feet					20/12							
			15											
							60/27	UC	276.79		1.4	164		
		20.0 881	20											
		Boring Terminated at 20 Feet												

See Exploration and Testing Procedures for a description of field and laboratory procedures used and additional data (If any).

See Supporting Information for explanation of symbols and abbreviations.

Notes

Elevation Reference: Elevations were interpolated from a topographic site plan.

Water Level Observations
No free water observed during augering

Advancement Method
Dry Augered to 5 feet; Mud Rotary thereafter

Abandonment Method
Boring backfilled with Auger Cuttings and/or Bentonite

Drill Rig
Mobile B-57

Hammer Type
Automatic

Driller
Texas Geo Bore

Logged by
Rick / Cobey

Boring Started
09-02-2023

Boring Completed
09-02-2023

City of Georgetown - SLWTP to SFI
Crockett Gardens Rd. to Southwest Byp. | Georgetown, TX
Terracon Project No. 96215381

Terracon
5307 Industrial Oaks Blvd Ste 160
Austin, TX

Boring Log No. B-18

Location: See Exploration Plan
Latitude: 30.6444° Longitude: -97.7257°
Depth (Ft.) Elevation: 775.0 (Ft.) +/-

Model Layer	Graphic Log	Description	Depth (Ft.)	Water Level Observations	Sample Type	Field Test Results	RECOVERY (%) RQD (%)	Strength Test: Test Type	Strength Test: Compressive Strength (tsf)	Strength Test: Strain (%)	Water Content (%)	Dry Unit Weight (pcf)	Atterberg Limits: LL-PL-PI	Percent Fines
		CLAYEY GRAVEL WITH SAND (GC), dark brown to brown, dense to very dense			X	8-17-23 N=40					7.8			
					X	50/6"					12.0		51-22-29	20
		4.0 771												
1		**POORLY GRADED GRAVEL WITH CLAY AND SAND (GP-GC)**, brown, very dense	5		X	30-38-50/1"					6.1			
					X	35-40-50/1"					7.4			
					X	40-50/3"					11.2			
		10.0 765	10											
		Boring Terminated at 10 Feet												

See Exploration and Testing Procedures for a description of field and laboratory procedures used and additional data (If any).

See Supporting Information for explanation of symbols and abbreviations.

Notes

Elevation Reference: Elevations were interpolated from a topographic site plan.

Water Level Observations
No free water observed during augering

Advancement Method
Dry Augered to completion

Abandonment Method
Boring backfilled with Auger Cuttings and/or Bentonite

Drill Rig
Mobile B-57

Hammer Type
Automatic

Driller
Texas Geo Bore

Logged by
Rick / Cobey

Boring Started
09-03-2023

Boring Completed
09-03-2023

City of Georgetown - SLWTP to SFI
Crockett Gardens Rd. to Southwest Byp. | Georgetown, TX
Terracon Project No. 96215381

Terracon
5307 Industrial Oaks Blvd Ste 160
Austin, TX

Boring Log No. B-19

Location: See Exploration Plan

Latitude: 30.6347° Longitude: -97.7240°

Depth (Ft.) Elevation: 901.0 (Ft.) +/-

Model Layer	Graphic Log	Description	Depth (Ft.)	Elevation	Water Level Observations	Sample Type	Field Test Results	RECOVERY (%) / RQD (%)	Strength Test: Test Type	Strength Test: Compressive Strength (tsf)	Strength Test: Strain (%)	Water Content (%)	Dry Unit Weight (pcf)	Atterberg Limits LL-PL-PI	Percent Fines
1		**CLAYEY GRAVEL WITH SAND (GC)**, dark brown to brown, very dense, with limestone fragments					50/2"					7.3			
			3.0	898			50/1"					14.8			
2		**LIMESTONE (EDWARDS GROUP)**, pale brown to light gray, moderately to highly fractured, with vugs	5					75/57	UC	302.79		0.5	160		
			10					98/78							
			15					82/42	UC	424.00		0.5	176		
			20					100/95							
			25.0	876											
		Boring Terminated at 25 Feet	25												

See Exploration and Testing Procedures for a description of field and laboratory procedures used and additional data (If any).

See Supporting Information for explanation of symbols and abbreviations.

Notes

Elevation Reference: Elevations were interpolated from a topographic site plan.

Water Level Observations

No free water observed during augering

Advancement Method

Dry Augered to 5 feet; Mud Rotary thereafter

Abandonment Method

Boring backfilled with Auger Cuttings and/or Bentonite

Drill Rig
Mobile B-57

Hammer Type
Automatic

Driller
Texas Geo Bore

Logged by
Rick / Cobey

Boring Started
09-09-2023

Boring Completed
09-09-2023

City of Georgetown - SLWTP to SFI
Crockett Gardens Rd. to Southwest Byp. | Georgetown, TX
Terracon Project No. 96215381

Terracon
5307 Industrial Oaks Blvd Ste 160
Austin, TX

Boring Log No. B-20

Location: See Exploration Plan
Latitude: 30.6340° Longitude: -97.7239°
Depth (Ft.) Elevation: 895.0 (Ft.) +/-

Model Layer	Graphic Log	Description	Depth (Ft.)	Water Level Observations	Sample Type	Field Test Results	RECOVERY (%) / RQD (%)	Strength Test: Test Type	Strength Test: Compressive Strength (tsf)	Strength Test: Strain (%)	Water Content (%)	Dry Unit Weight (pcf)	Atterberg Limits: LL-PL-PI	Percent Fines
1		**LEAN CLAY WITH GRAVEL (CL)**, brown, very stiff				13-13-14 N=27					7.6			
		2.0 893												
2		**LIMESTONE (EDWARDS GROUP)**, pale brown to light gray, moderately fractured				50/1"								
			5				85/55	UC	39.65		6.7	130		
		- marly seam from ~9½ to 11½ feet	10											
		- highly to extremely fractured, with marly seams below ~35 feet					77/57							
		- extremely fractured, with frequent clayey seams/layers below ~15 feet	15				18/15	UC	179.01		0.8	155		
		- chert seam at ~20½ feet	20				38/27							
		25.0 870	25											
		Boring Terminated at 25 Feet												

See Exploration and Testing Procedures for a description of field and laboratory procedures used and additional data (If any).

See Supporting Information for explanation of symbols and abbreviations.

Notes

Elevation Reference: Elevations were interpolated from a topographic site plan.

Water Level Observations
No free water observed during augering

Advancement Method
Dry Augered to 5 feet; Mud Rotary thereafter

Abandonment Method
Boring backfilled with Auger Cuttings and/or Bentonite

Drill Rig
Mobile B-57

Hammer Type
Automatic

Driller
Texas Geo Bore

Logged by
Rick / Cobey

Boring Started
09-06-2023

Boring Completed
09-06-2023

City of Georgetown - SLWTP to SFI
Crockett Gardens Rd. to Southwest Byp. | Georgetown, TX
Terracon Project No. 96215381

Terracon
5307 Industrial Oaks Blvd Ste 160
Austin, TX

Boring Log No. B-21

Location: See Exploration Plan

Latitude: 30.6309° Longitude: -97.7227°

Depth (Ft.) Elevation: 887.0 (Ft.) +/-

Model Layer	Graphic Log	Description	Depth (Ft.)	Water Level Observations	Sample Type	Field Test Results	RECOVERY (%) / RQD (%)	Strength Test: Test Type	Strength Test: Compressive Strength (tsf)	Strength Test: Strain (%)	Water Content (%)	Dry Unit Weight (pcf)	Atterberg Limits: LL-PL-PI	Percent Fines
1		**CLAYEY SAND WITH GRAVEL (SC)**, light brown to pale brown, very dense, with limestone fragments 2.0 885				6-7-50/6"					4.5			
2		**LIMESTONE (EDWARDS GROUP)**, pale brown to light gray, highly fractured, with vugs and clayey seams/layers				50/1"								
			5				53/28	UC	166.14		1.4	128		
			10				55/33							
		- moderately fractured from ~15 to 20 feet	15				92/62	UC	284.94		1.2	157		
			20				15/0							
		25.0 862	25											
		Boring Terminated at 25 Feet												

See Exploration and Testing Procedures for a description of field and laboratory procedures used and additional data (If any).

See Supporting Information for explanation of symbols and abbreviations.

Notes

Elevation Reference: Elevations were interpolated from a topographic site plan.

Water Level Observations
No free water observed during augering

Advancement Method
Dry Augered to 5 feet; Mud Rotary thereafter

Abandonment Method
Boring backfilled with Auger Cuttings and/or Bentonite

Drill Rig
Mobile B-57

Hammer Type
Automatic

Driller
Texas Geo Bore

Logged by
Rick / Cobey

Boring Started
09-07-2023

Boring Completed
09-07-2023

Terracon
5307 Industrial Oaks Blvd Ste 160
Austin, TX

Boring Log No. B-22

Location: See Exploration Plan

Latitude: 30.6277° Longitude: -97.7221°

Depth (Ft.) Elevation: 882.0 (Ft.) +/-

Model Layer	Graphic Log	Description	Depth (Ft.)	Water Level Observations	Sample Type	Field Test Results	RECOVERY (%) / RQD (%)	Strength Test: Test Type	Strength Test: Compressive Strength (tsf)	Strength Test: Strain (%)	Water Content (%)	Dry Unit Weight (pcf)	Atterberg Limits: LL-PL-PI	Percent Fines
1		**SANDY LEAN CLAY (CL)**, brown, hard, with limestone fragments (1.0 / 881)				50/5"					4.5			
2		**LIMESTONE (EDWARDS GROUP)**, pale brown to light gray, highly fractured, with vugs and clayey seams/layers				50/2"								
			5				52/15	UC	265.74		1.1	169		
		- void from ~ 11½ to 12 feet	10				85/45							
			15				43/17	UC	198.02		1.4	153		
			20				45/15							
		25.0 / 857	25											
		Boring Terminated at 25 Feet												

See Exploration and Testing Procedures for a description of field and laboratory procedures used and additional data (If any).

See Supporting Information for explanation of symbols and abbreviations.

Notes

Elevation Reference: Elevations were interpolated from a topographic site plan.

Water Level Observations
No free water observed during augering

Advancement Method
Dry Augered to 5 feet; Mud Rotary thereafter

Abandonment Method
Boring backfilled with Auger Cuttings and/or Bentonite

Drill Rig
Mobile B-57

Hammer Type
Automatic

Driller
Texas Geo Bore

Logged by
Rick / Cobey

Boring Started
09-07-2023

Boring Completed
09-07-2023

City of Georgetown - SLWTP to SFI
Crockett Gardens Rd. to Southwest Byp. | Georgetown, TX
Terracon Project No. 96215381

Terracon
5307 Industrial Oaks Blvd Ste 160
Austin, TX

Boring Log No. B-23

Location: See Exploration Plan

Latitude: 30.6236° Longitude: -97.7204°

Depth (Ft.) Elevation: 810.0 (Ft.) +/-

Model Layer	Graphic Log	Description	Depth (Ft.)	Elevation	Water Level Observations	Sample Type	Field Test Results	RECOVERY (%) / RQD (%)	Strength Test: Test Type	Strength Test: Compressive Strength (tsf)	Strength Test: Strain (%)	Water Content (%)	Dry Unit Weight (pcf)	Atterberg Limits LL-PL-PI	Percent Fines
1		**CLAYEY GRAVEL WITH SAND (GC)**, brown to light brown, dense, with limestone fragments	2.0	808			17-20-50/1"								
2		**LIMESTONE (EDWARDS GROUP)**, pale brown to light gray, highly fractured, with vugs					50/1"								
			5					72/43	UC	233.33		0.4	167		
		- slightly fractured below ~10 feet	10					85/85							
			15					98/98	UC	265.45		0.8	164		
			20					90/90		120.78		0.9	161		
			25.0	785											
		Boring Terminated at 25 Feet	25												

See Exploration and Testing Procedures for a description of field and laboratory procedures used and additional data (If any).

See Supporting Information for explanation of symbols and abbreviations.

Notes

Elevation Reference: Elevations were interpolated from a topographic site plan.

Water Level Observations

No free water observed during augering

Advancement Method

Dry Augered to 5 feet; Mud Rotary thereafter

Abandonment Method

Boring backfilled with Auger Cuttings and/or Bentonite

Drill Rig
Mobile B-57

Hammer Type
Automatic

Driller
Texas Geo Bore

Logged by
Rick / Cobey

Boring Started
09-07-2023

Boring Completed
09-07-2023

City of Georgetown - SLWTP to SFI
Crockett Gardens Rd. to Southwest Byp. | Georgetown, TX
Terracon Project No. 96215381

Terracon
5307 Industrial Oaks Blvd Ste 160
Austin, TX

Boring Log No. B-24

Location: See Exploration Plan

Latitude: 30.6215° Longitude: -97.7193°

Depth (Ft.) Elevation: 788.0 (Ft.) +/-

Model Layer	Graphic Log	Description	Depth (Ft.)	Water Level Observations	Sample Type	Field Test Results	RECOVERY (%) / RQD (%)	Strength Test: Test Type	Strength Test: Compressive Strength (tsf)	Strength Test: Strain (%)	Water Content (%)	Dry Unit Weight (pcf)	Atterberg Limits: LL-PL-PI	Percent Fines
1		**CLAYEY SAND WITH GRAVEL (SC)**, light brown to pale brown, very dense, with limestone fragments 2.0 786				32-18-50/5"								
2		**LIMESTONE (EDWARDS GROUP)**, pale brown to light gray, extremely fractured, with frequent clayey seams/layers to ~15 feet				50/1"								
			5				58/0							
			10				42/0							
		- moderately to highly fractured, with marly seams below ~15 feet	15				87/63	UC	130.82		1.0	162		
			20				87/27	UC	156.08		0.7	164		
		25.0 763	25											
		Boring Terminated at 25 Feet												

See Exploration and Testing Procedures for a description of field and laboratory procedures used and additional data (If any).

See Supporting Information for explanation of symbols and abbreviations.

Notes

Elevation Reference: Elevations were interpolated from a topographic site plan.

Water Level Observations
No free water observed during augering

Advancement Method
Dry Augered to 5 feet; Mud Rotary thereafter

Abandonment Method
Boring backfilled with Auger Cuttings and/or Bentonite

Drill Rig
Mobile B-57

Hammer Type
Automatic

Driller
Texas Geo Bore

Logged by
Rick / Cobey

Boring Started
09-08-2023

Boring Completed
09-08-2023

City of Georgetown - SLWTP to SFI
Crockett Gardens Rd. to Southwest Byp. | Georgetown, TX
Terracon Project No. 96215381

Terracon
5307 Industrial Oaks Blvd Ste 160
Austin, TX

Grain Size Distribution

ASTM D422 / ASTM C136

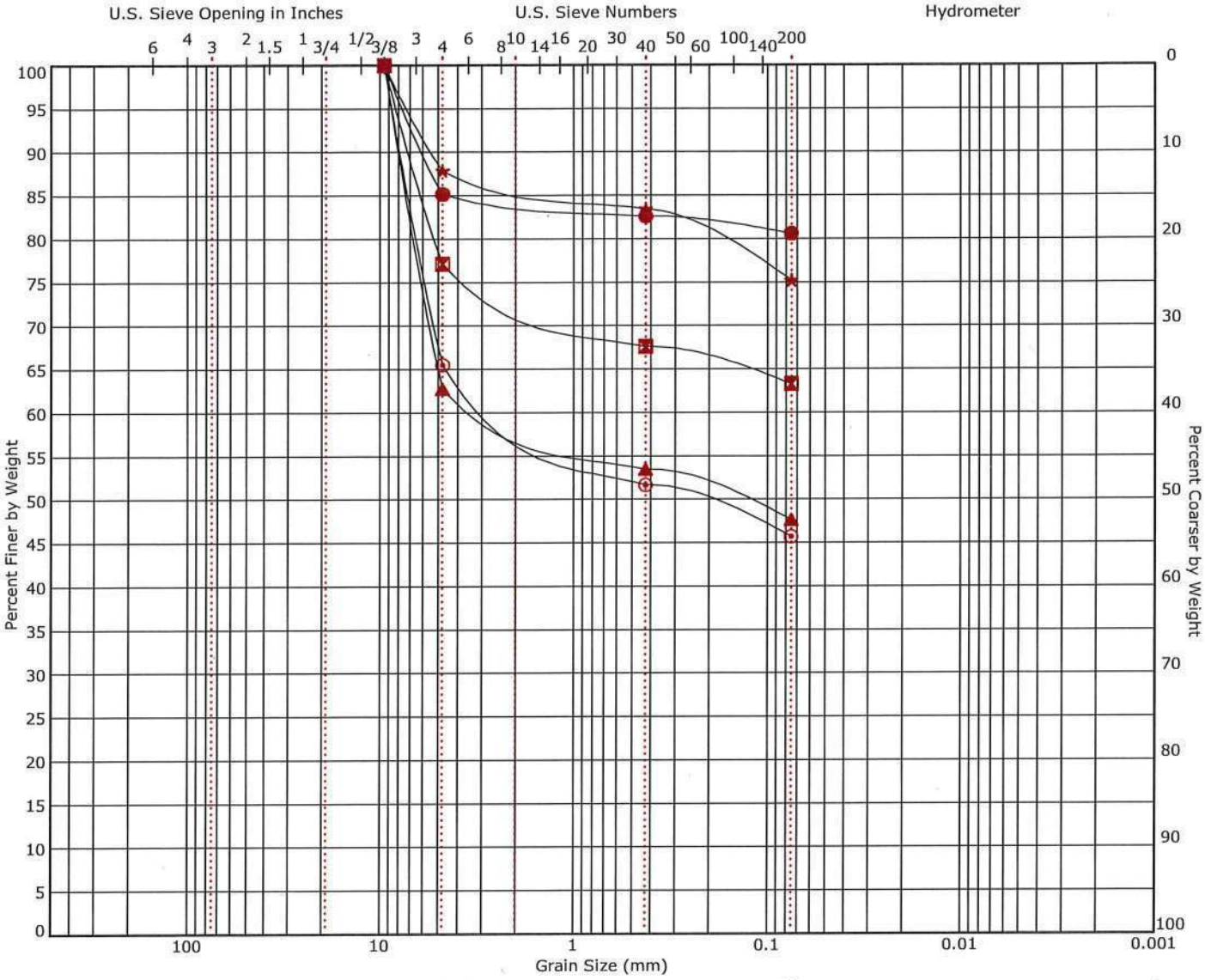

Cobbles	Gravel		Sand			Silt or Clay
	coarse	fine	coarse	medium	fine	

	Boring ID	Depth (Ft)	Description	USCS	LL	PL	PI	Cc	Cu
●	B-3	0 - 1.5	FAT CLAY with GRAVEL	CH	60	18	42		
⊠	B-6	0.5 - 1.3	GRAVELLY LEAN CLAY	CL	41	18	23		
▲	B-10	2.5 - 3.7	CLAYEY GRAVEL with SAND	GC	69	22	47		
★	B-12	0.5 - 2	FAT CLAY with SAND	CH	63	24	39		
⊙	B-14	2.5 - 4	CLAYEY GRAVEL with SAND	GC	60	22	38		

	Boring ID	Depth (Ft)	D_{100}	D_{60}	D_{30}	D_{10}	%Cobbles	%Gravel	%Sand	%Fines	%Silt	%Clay
●	B-3	0 - 1.5	9.5				0.0	14.8	4.6	80.6		
⊠	B-6	0.5 - 1.3	9.5				0.0	22.9	13.9	63.3		
▲	B-10	2.5 - 3.7	9.5	2.317			0.0	37.2	15.1	47.7		
★	B-12	0.5 - 2	9.5				0.0	12.1	12.7	75.2		
⊙	B-14	2.5 - 4	9.5	1.816			0.0	34.5	19.8	45.7		

City of Georgetown - SLWTP to SFI
Crockett Gardens Rd. to Southwest Byp. | Georgetown, TX
Terracon Project No. 96215381

Terracon
5307 Industrial Oaks Blvd Ste 160
Austin, TX

Grain Size Distribution

ASTM D422 / ASTM C136

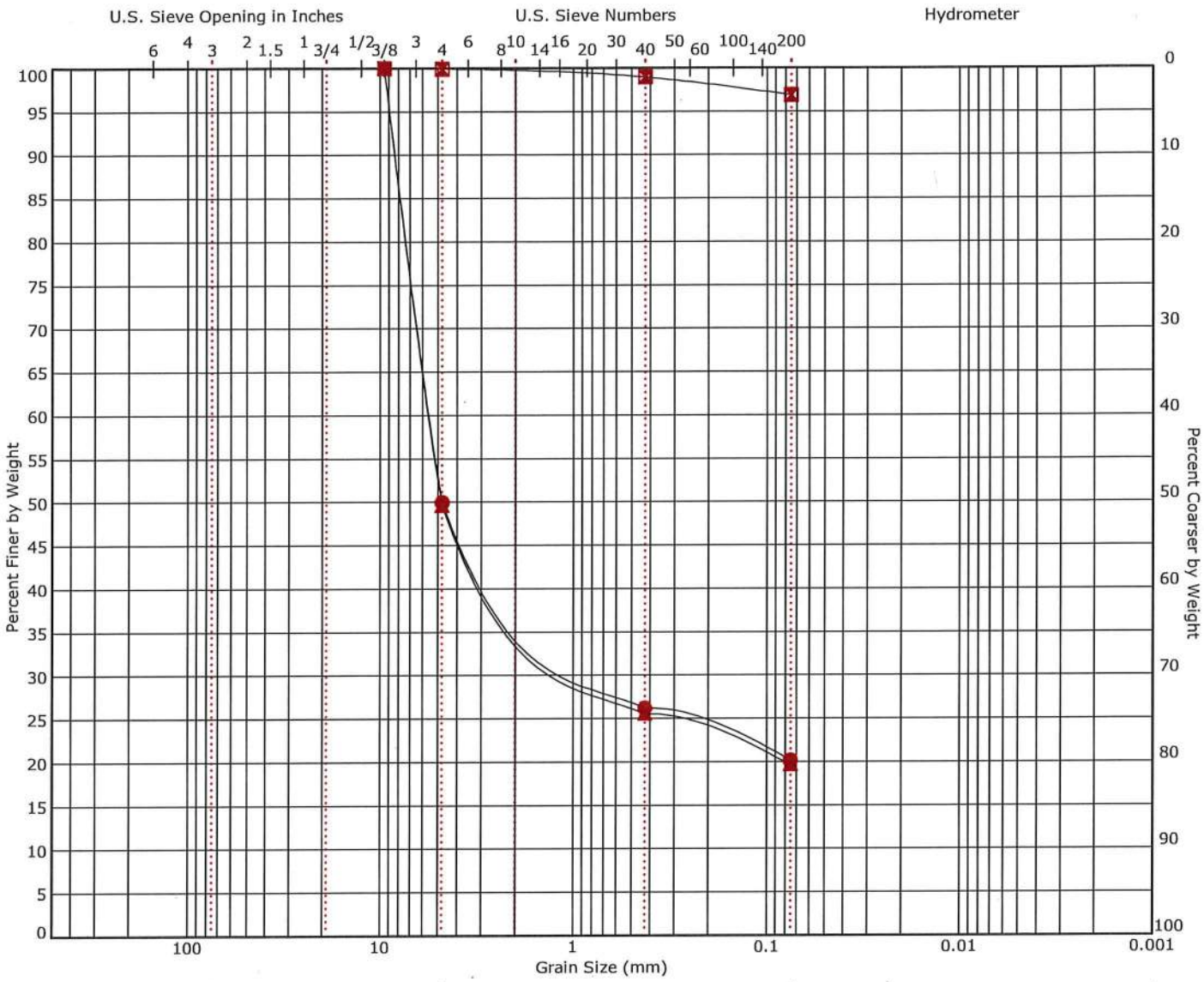

Cobbles	Gravel		Sand			Silt or Clay
	coarse	fine	coarse	medium	fine	

	Boring ID	Depth (Ft)	Description	USCS	LL	PL	PI	Cc	Cu
●	B-14	6.5 - 8	CLAYEY GRAVEL with SAND	GC	39	16	23		
⊠	B-17	0 - 2	FAT CLAY	CH	59	22	37		
▲	B-18	2.5 - 3	CLAYEY GRAVEL with SAND	GC	51	22	29		

	Boring ID	Depth (Ft)	D_{100}	D_{60}	D_{30}	D_{10}	%Cobbles	%Gravel	%Sand	%Fines	%Silt	%Clay
●	B-14	6.5 - 8	9.5	5.457	0.623		0.0	50.0	29.8	20.2		
⊠	B-17	0 - 2	9.5				0.0	0.1	3.1	96.9		
▲	B-18	2.5 - 3	9.5	5.483	0.665		0.0	50.4	29.9	19.6		

City of Georgetown - SLWTP to SFI
Crockett Gardens Rd. to Southwest Byp. | Georgetown, TX
Terracon Project No. 96215381

Terracon
5307 Industrial Oaks Blvd Ste 160
Austin, TX

Atterberg Limit Results

ASTM D4318

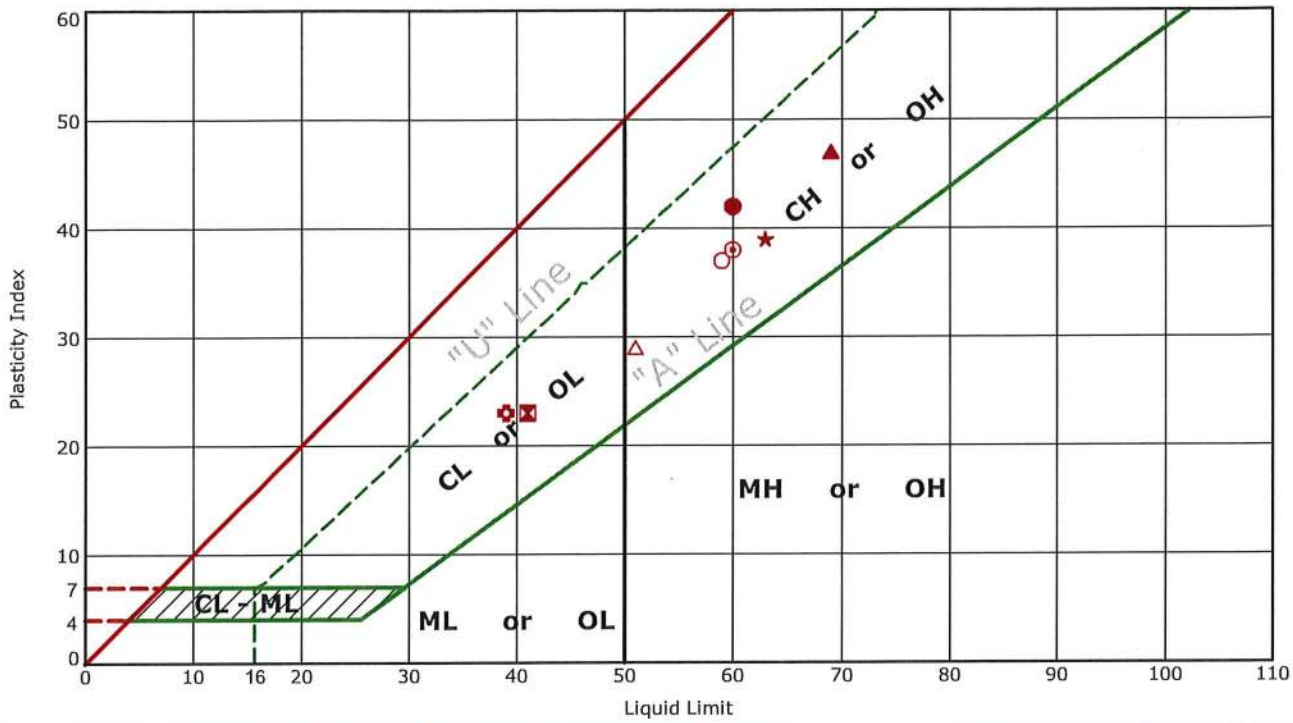

	Boring ID	Depth (Ft)	LL	PL	PI	Fines	USCS	Description
●	B-3	0 - 1.5	60	18	42	80.6	CH	FAT CLAY with GRAVEL
⊠	B-6	0.5 - 1.3	41	18	23	63.3	CL	GRAVELLY LEAN CLAY
▲	B-10	2.5 - 3.7	69	22	47	47.7	GC	CLAYEY GRAVEL with SAND
★	B-12	0.5 - 2	63	24	39	75.2	CH	FAT CLAY with SAND
⊙	B-14	2.5 - 4	60	22	38	45.7	GC	CLAYEY GRAVEL with SAND
✿	B-14	6.5 - 8	39	16	23	20.2	GC	CLAYEY GRAVEL with SAND
○	B-17	0 - 2	59	22	37	96.9	CH	FAT CLAY
△	B-18	2.5 - 3	51	22	29	19.6	GC	CLAYEY GRAVEL with SAND

Supporting Information

Contents:

General Notes
Unified Soil Classification System
Description of Rock Properties

Note: All attachments are one page unless noted above.

Terracon
5307 Industrial Oaks Blvd Ste 160
Austin, TX

General Notes

Sampling

Rock Core

Shelby Tube

Standard Penetration Test

Water Level

Water Initially Encountered

Water Level After a Specified Period of Time

Water Level After a Specified Period of Time

Cave In Encountered

Water levels indicated on the soil boring logs are the levels measured in the borehole at the times indicated. Groundwater level variations will occur over time. In low permeability soils, accurate determination of groundwater levels is not possible with short term water level observations.

Field Tests

N	Standard Penetration Test Resistance (Blows/Ft.)
(HP)	Hand Penetrometer
(T)	Torvane
(DCP)	Dynamic Cone Penetrometer
UC	Unconfined Compressive Strength
(PID)	Photo-Ionization Detector
(OVA)	Organic Vapor Analyzer

Descriptive Soil Classification

Soil classification as noted on the soil boring logs is based Unified Soil Classification System. Where sufficient laboratory data exist to classify the soils consistent with ASTM D2487 "Classification of Soils for Engineering Purposes" this procedure is used. ASTM D2488 "Description and Identification of Soils (Visual-Manual Procedure)" is also used to classify the soils, particularly where insufficient laboratory data exist to classify the soils in accordance with ASTM D2487. In addition to USCS classification, coarse grained soils are classified on the basis of their in-place relative density, and fine-grained soils are classified on the basis of their consistency. See "Strength Terms" table below for details. The ASTM standards noted above are for reference to methodology in general. In some cases, variations to methods are applied as a result of local practice or professional judgment.

Location And Elevation Notes

Exploration point locations as shown on the Exploration Plan and as noted on the soil boring logs in the form of Latitude and Longitude are approximate. See Exploration and Testing Procedures in the report for the methods used to locate the exploration points for this project. Surface elevation data annotated with +/- indicates that no actual topographical survey was conducted to confirm the surface elevation. Instead, the surface elevation was approximately determined from topographic maps of the area.

Strength Terms

Relative Density of Coarse-Grained Soils (More than 50% retained on No. 200 sieve.) Density determined by Standard Penetration Resistance		Consistency of Fine-Grained Soils (50% or more passing the No. 200 sieve.) Consistency determined by laboratory shear strength testing, field visual-manual procedures or standard penetration resistance			Bedrock	
Relative Density	**Standard Penetration or N-Value (Blows/Ft.)**	**Consistency**	**Unconfined Compressive Strength Qu (tsf)**	**Standard Penetration or N-Value (Blows/Ft.)**	**Standard Penetration or N-Value (Blows/Ft.)**	**Consistency**
Very Loose	0 - 3	Very Soft	less than 0.25	0 - 1	< 20	Weathered
Loose	4 - 9	Soft	0.25 to 0.50	2 - 4	20 - 29	Firm
Medium Dense	10 - 29	Medium Stiff	0.50 to 1.00	4 - 8	30 - 49	Medium Hard
Dense	30 - 50	Stiff	1.00 to 2.00	8 - 15	50 - 79	Hard
Very Dense	> 50	Very Stiff	2.00 to 4.00	15 - 30	>79	Very Hard
		Hard	> 4.00	> 30		

Relevance of Exploration and Laboratory Test Results

Exploration/field results and/or laboratory test data contained within this document are intended for application to the project as described in this document. Use of such exploration/field results and/or laboratory test data should not be used independently of this document.

Unified Soil Classification System

Criteria for Assigning Group Symbols and Group Names Using Laboratory Tests [A]				Soil Classification	
				Group Symbol	Group Name [B]
Coarse-Grained Soils: More than 50% retained on No. 200 sieve	**Gravels:** More than 50% of coarse fraction retained on No. 4 sieve	**Clean Gravels:** Less than 5% fines [C]	Cu≥4 and 1≤Cc≤3 [E]	GW	Well-graded gravel [F]
			Cu<4 and/or [Cc<1 or Cc>3.0] [E]	GP	Poorly graded gravel [F]
		Gravels with Fines: More than 12% fines [C]	Fines classify as ML or MH	GM	Silty gravel [F, G, H]
			Fines classify as CL or CH	GC	Clayey gravel [F, G, H]
	Sands: 50% or more of coarse fraction passes No. 4 sieve	**Clean Sands:** Less than 5% fines [D]	Cu≥6 and 1≤Cc≤3 [E]	SW	Well-graded sand [I]
			Cu<6 and/or [Cc<1 or Cc>3.0] [E]	SP	Poorly graded sand [I]
		Sands with Fines: More than 12% fines [D]	Fines classify as ML or MH	SM	Silty sand [G, H, I]
			Fines classify as CL or CH	SC	Clayey sand [G, H, I]
Fine-Grained Soils: 50% or more passes the No. 200 sieve	**Silts and Clays:** Liquid limit less than 50	**Inorganic:**	PI > 7 and plots above "A" line [J]	CL	Lean clay [K, L, M]
			PI < 4 or plots below "A" line [J]	ML	Silt [K, L, M]
		Organic:	$\frac{LL\ oven\ dried}{LL\ not\ dried} < 0.75$	OL	Organic clay [K, L, M, N]
					Organic silt [K, L, M, O]
	Silts and Clays: Liquid limit 50 or more	**Inorganic:**	PI plots on or above "A" line	CH	Fat clay [K, L, M]
			PI plots below "A" line	MH	Elastic silt [K, L, M]
		Organic:	$\frac{LL\ oven\ dried}{LL\ not\ dried} < 0.75$	OH	Organic clay [K, L, M, P]
					Organic silt [K, L, M, Q]
Highly organic soils:	Primarily organic matter, dark in color, and organic odor			PT	Peat

[A] Based on the material passing the 3-inch (75-mm) sieve.
[B] If field sample contained cobbles or boulders, or both, add "with cobbles or boulders, or both" to group name.
[C] Gravels with 5 to 12% fines require dual symbols: GW-GM well-graded gravel with silt, GW-GC well-graded gravel with clay, GP-GM poorly graded gravel with silt, GP-GC poorly graded gravel with clay.
[D] Sands with 5 to 12% fines require dual symbols: SW-SM well-graded sand with silt, SW-SC well-graded sand with clay, SP-SM poorly graded sand with silt, SP-SC poorly graded sand with clay.
[E] $Cu = D_{60}/D_{10}$ $\quad Cc = \frac{(D_{30})^2}{D_{10} \times D_{60}}$
[F] If soil contains ≥ 15% sand, add "with sand" to group name.
[G] If fines classify as CL-ML, use dual symbol GC-GM, or SC-SM.
[H] If fines are organic, add "with organic fines" to group name.
[I] If soil contains ≥ 15% gravel, add "with gravel" to group name.
[J] If Atterberg limits plot in shaded area, soil is a CL-ML, silty clay.
[K] If soil contains 15 to 29% plus No. 200, add "with sand" or "with gravel," whichever is predominant.
[L] If soil contains ≥ 30% plus No. 200 predominantly sand, add "sandy" to group name.
[M] If soil contains ≥ 30% plus No. 200, predominantly gravel, add "gravelly" to group name.
[N] PI ≥ 4 and plots on or above "A" line.
[O] PI < 4 or plots below "A" line.
[P] PI plots on or above "A" line.
[Q] PI plots below "A" line.

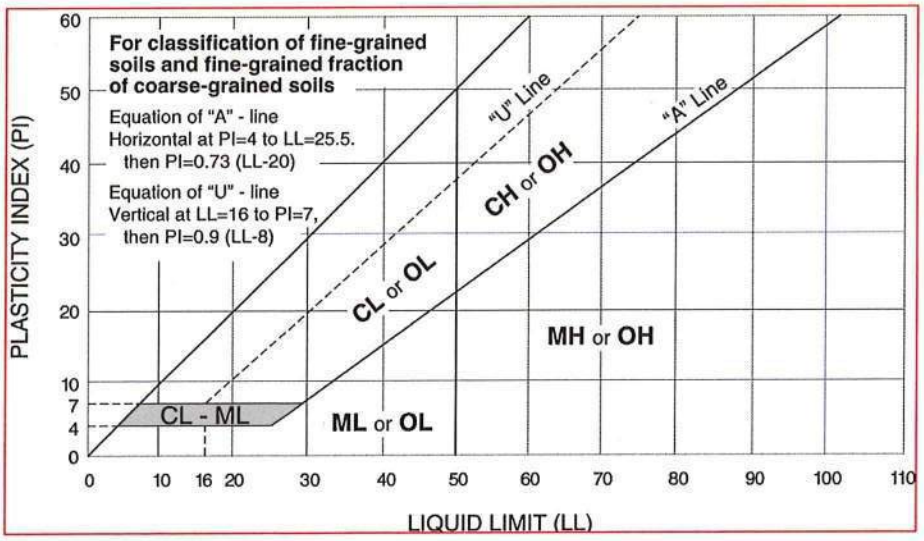

Rock Classification Notes

WEATHERING	
Term	**Description**
Fresh	Mineral crystals appear bright; show no discoloration. Features show little or no staining on surfaces. Discoloration does not extend into intact rock.
Slightly weathered	Rock generally fresh except along fractures. Some fractures stained and discoloration may extend <0.5 inches into rock.
Moderately weathered	Significant portions of rock are dull and discolored. Rock may be significantly weaker than in fresh state near fractures. Soil zones of limited extent may occur along some fractures.
Highly weathered	Rock dull and discolored throughout. Majority of rock mass is significantly weaker and has decomposed and/or disintegrated; isolated zones of stronger rock and/or soil may occur throughout.
Completely weathered	All rock material is decomposed and/or disintegrated to soil. The rock mass or fabric is still evident and largely intact. Isolated zones of stronger rock may occur locally.

STRENGTH OR HARDNESS		
Description	**Field Identification**	**Uniaxial Compressive Strength, psi**
Extremely strong	Can only be chipped with geological hammer. Rock rings on hammer blows. Cannot be scratched with a sharp pick. Hand specimens require several hard hammer blows to break.	>36,000
Very strong	Several blows of a geological hammer to fracture. Cannot be scratched with a 20d common steel nail. Can be scratched with a geologist's pick only with difficulty.	15,000-36,000
Strong	More than one blow of a geological hammer needed to fracture. Can be scratched with a 20d nail or geologist's pick. Gouges or grooves to ¼ inch deep can be excavated by a hard blow of a geologist's pick. Hand specimens can be detached by a moderate blow.	7,500-15,000
Medium strong	One blow of geological hammer needed to fracture. Can be distinctly scratched with 20d nail. Can be grooved or gouged 1/16 in. deep by firm pressure with a geologist's pick point. Can be fractured with single firm blow of geological hammer. Can be excavated in small chips (about 1-in. maximum size) by hard blows of the point of a geologist's pick;	3,500-7,500
Weak	Shallow indent by firm blow with geological hammer point. Can be gouged or grooved readily with geologist's pick point. Can be excavated in pieces several inches in size by moderate blows of a pick point. Small thin pieces can be broken by finger pressure.	700-3,500
Very weak	Crumbles under firm blow with geological hammer point. Can be excavated readily with the point of a geologist's pick. Pieces 1-in. or more in thickness can be broken with finger pressure. Can be scratched readily by fingernail.	150-700

DISCONTINUITY DESCRIPTION			
Fracture Spacing (Joints, Faults, Other Fractures)		**Bedding Spacing (May Include Foliation or Banding)**	
Description	**Spacing**	**Description**	**Spacing**
Intensely fractured	< 2.5 inches	**Laminated**	< ½-inch
Highly fractured	2.5 – 8 inches	**Very thin**	½ – 2 inches
Moderately fractured	8 inches to 2 feet	**Thin**	2 inches – 1 foot
Slightly fractured	2 to 6.5 feet	**Medium**	1 – 3 feet
Very slightly fractured	> 6.5 feet	**Thick**	3 – 10 feet
		Massive	> 10 feet

ROCK QUALITY DESIGNATION (RQD) [1]	
Description	**RQD Value (%)**
Very Poor	0 - 25
Poor	25 – 50
Fair	50 – 75
Good	75 – 90
Excellent	90 - 100

1. The combined length of all sound and intact core segments equal to or greater than 4 inches in length, expressed as a percentage of the total core run length.

Photography Log

Photo B-1.1: Boring B-1 Samples from 0 to 10 feet

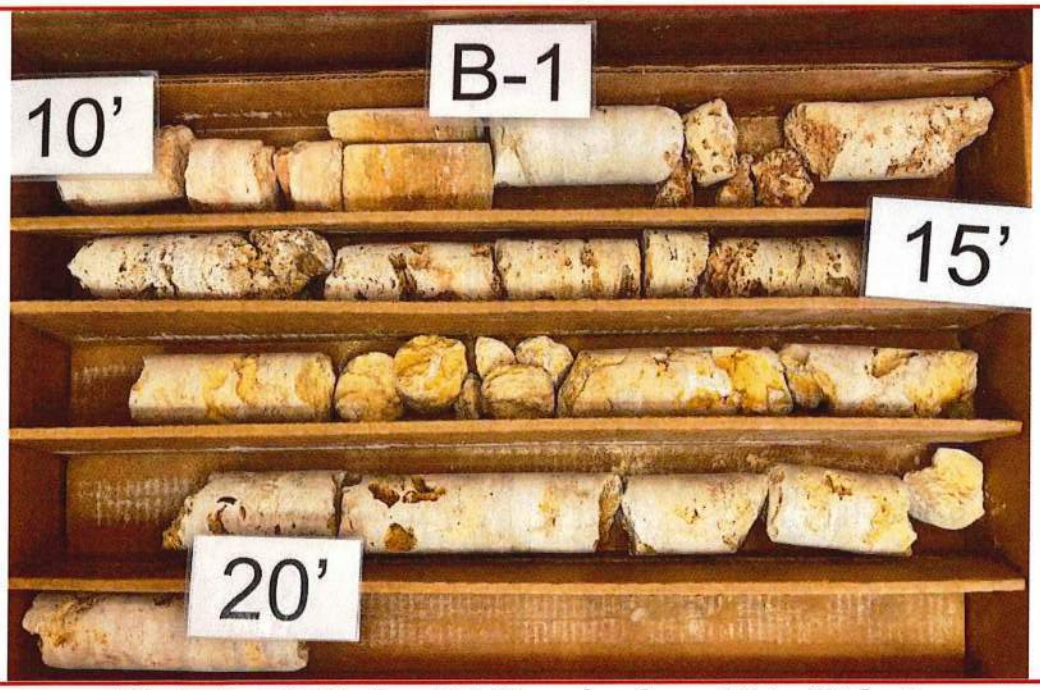

Photo B-1.2: Boring B-1 Samples from 10 to 20 feet

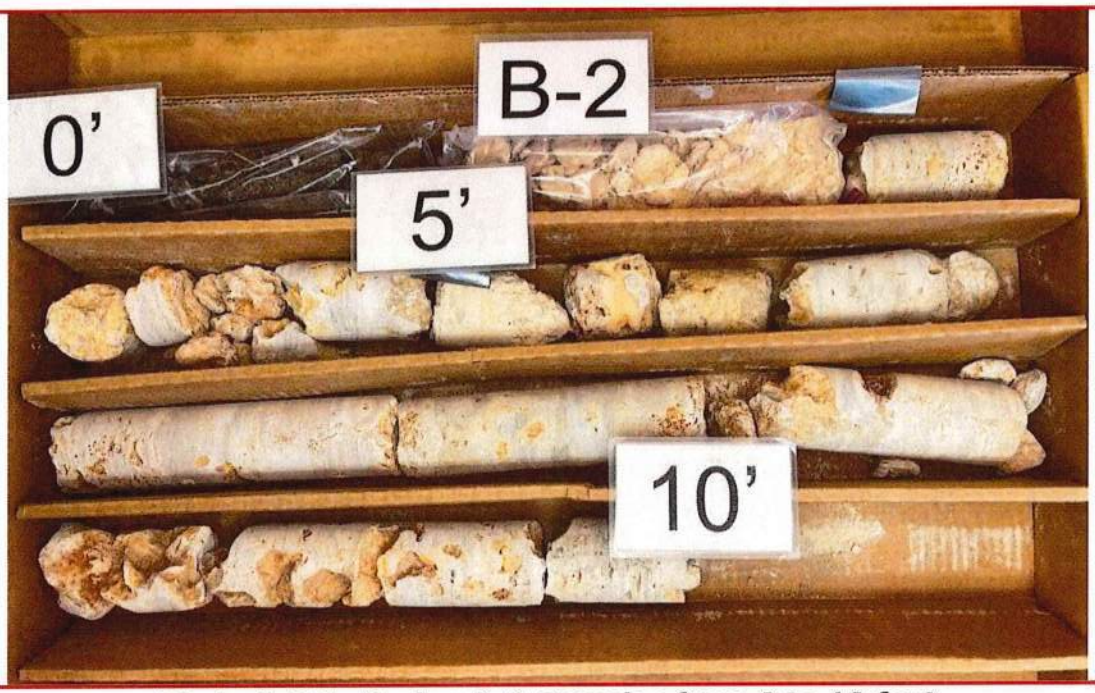

Photo B-2.1: Boring B-2 Samples from 0 to 10 feet

Photo B-2.2: Boring B-2 Samples from 10 to 20 feet

Photo B-3.1: Boring B-3 Samples from 0 to 10 feet

Photo B-3.2: Boring B-3 Samples from 10 to 20 feet

Photo B-3.3: Boring B-3 Samples from 20 to 30 feet

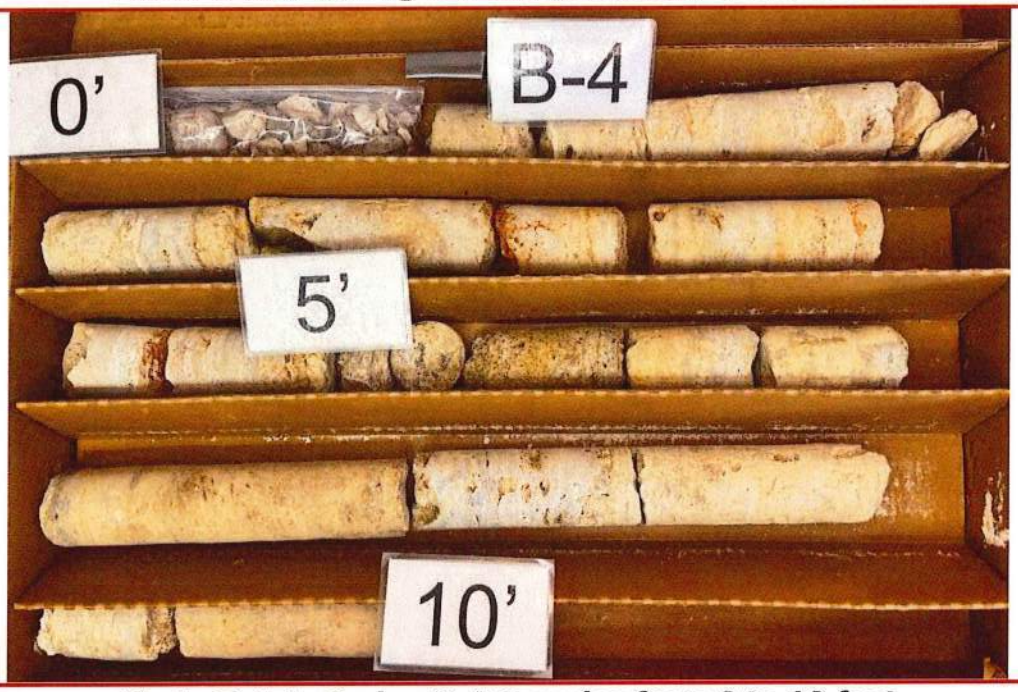

Photo B-4.1: Boring B-4 Samples from 0 to 10 feet

Photo B-4.2: Boring B-4 Core Samples from 10 to 20 feet

Photo B-4.3: Boring B-4 Core Samples from 20 to 30 feet

Photo B-5.1: Boring B-5 Samples from 0 to 15 feet

Photo B-5.2: Boring B-5 Core Samples from 15 to 25

Photo B-5.3: Boring B-5 Samples from 25 to 35 feet

Photo B-5.4: Boring B-5 Samples from 35 to 40 feet

Photo B-5.5: Boring B-5 Samples from 40 to 45 feet

Photo B-6.1: Boring B-6 Samples from 0 to 15 feet

Photo B-7.1: Boring B-7 Samples from 0 to 10 feet

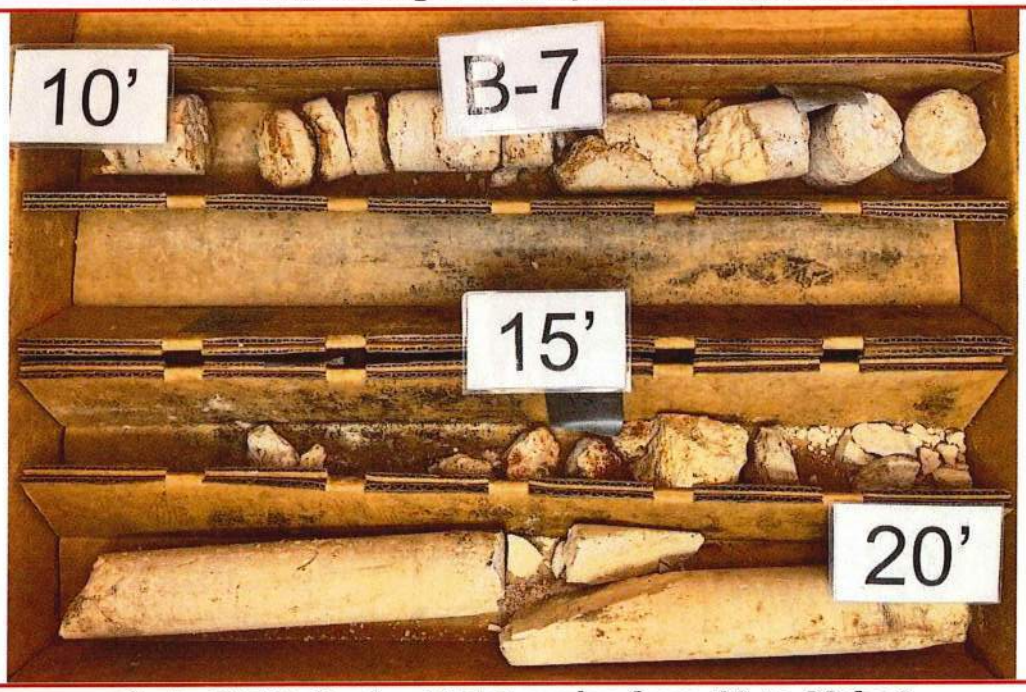

Photo B-7.2: Boring B-7 Samples from 10 to 20 feet

Photo B-8.1: Boring B-8 Samples from 0 to 15 feet

Photo B-8.2: Boring B-8 Samples from 15 to 25 feet

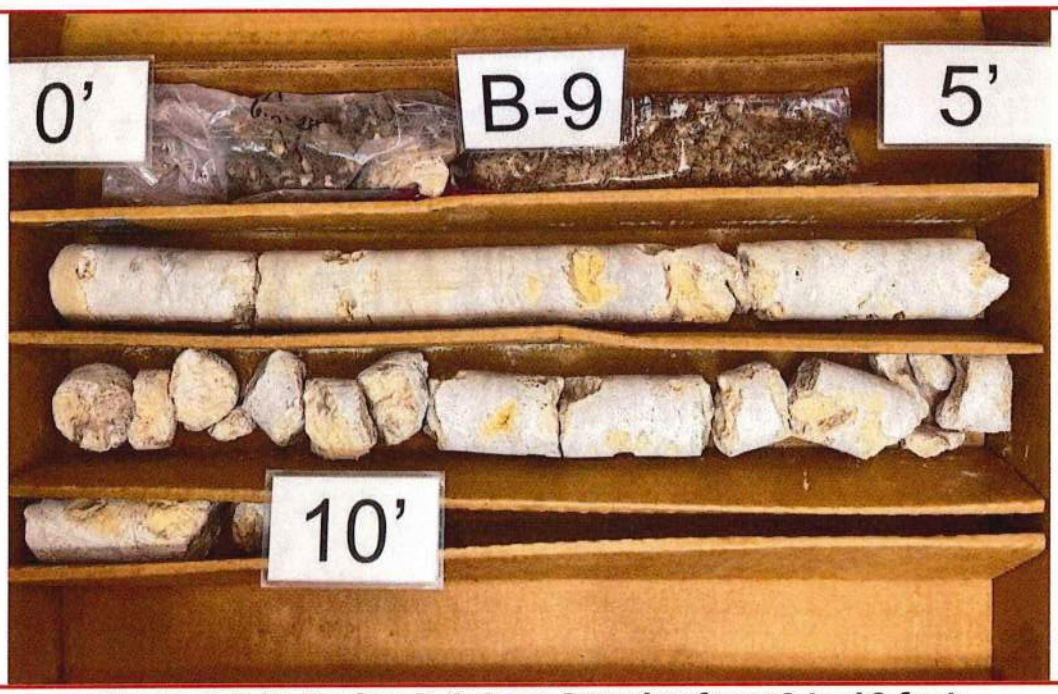

Photo B-9.1: Boring B-9 Core Samples from 0 to 10 feet

Photo B-9.2: Boring B-9 Samples from 10 to 20 feet

Photo B-9.3: Boring B-9 Samples from 20 to 25 feet

Photo B-10.1: Boring B-10 Samples from 0 to 15 feet

Photo B-10.2: Boring B-10 Samples from 15 to 25 feet

Photo B-10.3: Boring B-10 Core Samples from 25 to 30 feet

Photo B-11.1: Boring B-11 Samples from 0 to 15 feet

Photo B-11.2: Boring B-11 Samples from 15 to 25 feet

Photo B-12.1: Boring B-12 Samples from 0 to 10 feet

Photo B-12.2: Boring B-12 Samples from 10 to 20 feet

Photo B-12.3: Boring B-12 Samples from 20 to 25 feet

Photo B-13.1: Boring B-13 Samples from 0 to 15 feet

Photo B-13.2: Boring B-13 Samples from 15 to 25 feet

Photo B-13.3: Boring B-13 Samples from 25 to 35 feet

Photo B-13.4: Boring B-13 Samples from 35 to 45 feet

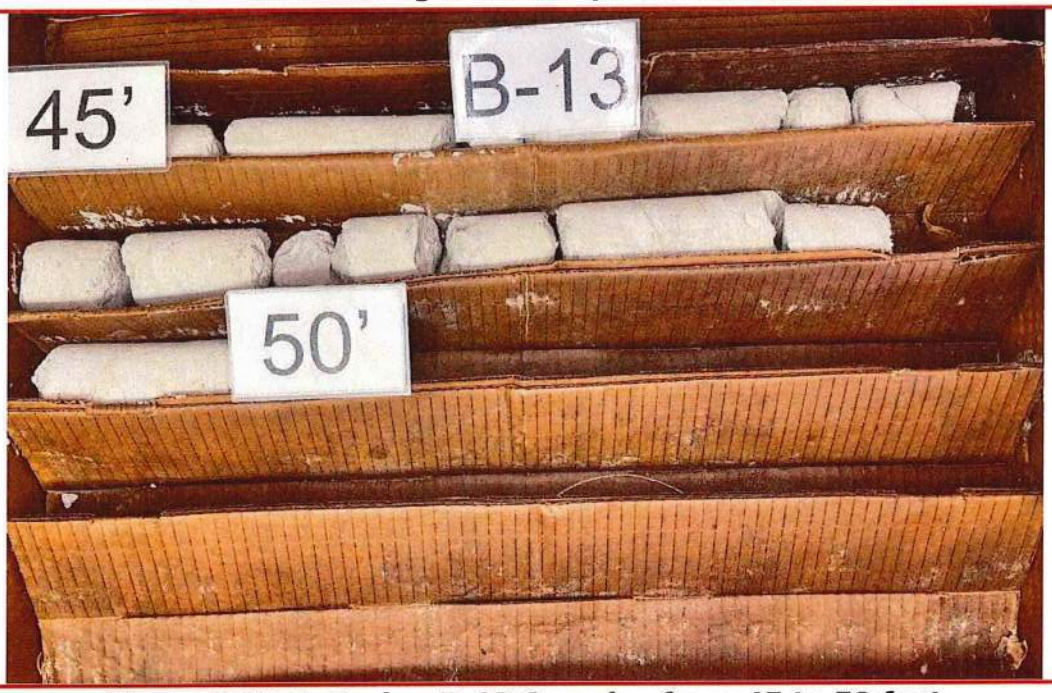

Photo B-13.5: Boring B-13 Samples from 45 to 50 feet

Photo B-14.1: Boring B-14 Samples from 0 to 15 feet

Photo B-15.1: Boring B-15 Samples from 0 to 15 feet

Photo B-16.1: Boring B-16 Samples from 0 to 15 feet

Photo B-16.2: Boring B-16 Samples from 15 to 25 feet

Photo B-17.1: Boring B-17 Samples from 0 to 10 feet

Photo B-17.2: Boring B-17 Samples from 10 to 20 feet

Photo B-18.1: Boring B-18 Samples from 0 to 10 feet

Photo B-19.1: Boring B-19 Samples from 0 to 10 feet

Photo B-19.2: Boring B-19 Samples from 10 to 20 feet

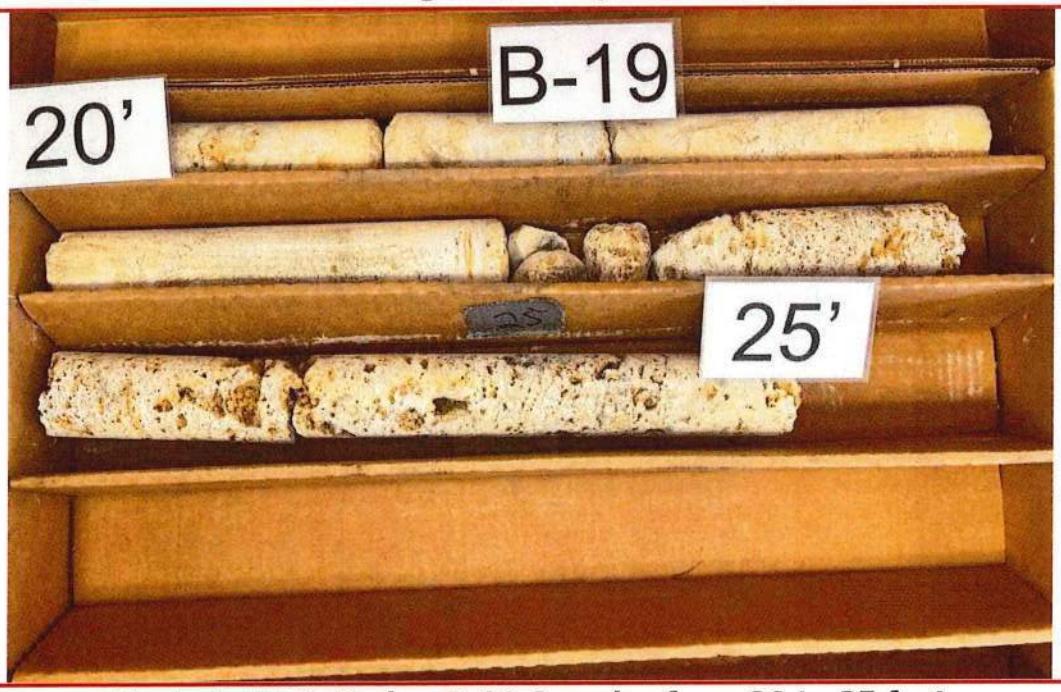

Photo B-19.3: Boring B-19 Samples from 20 to 25 feet

Photo B-20.1: Boring B-20 Samples from 0 to 15 feet

Photo B-20.2: Boring B-20 Samples from 15 to 25 feet

Photo B-21.1: Boring B-21 Samples from 0 to 15 feet

Photo B-21.2: Boring B-21 Samples from 15 to 25 feet

Photo B-22.1: Boring B-22 Samples from 0 to 15 feet

Photo B-22.2: Boring B-22 Samples from 15 to 25 feet

Photo B-23.1: Boring B-23 Samples from 0 to 15 feet

Photo B-23.2: Boring B-23 Samples from 15 to 25 feet

Photo B-24.1: Boring B-24 Samples from 0 to 15 feet

Photo B-24.2: Boring B-24 Samples from 15 to 25 feet

NOT USED

TECHNICAL SPECIFICATIONS

SECTION CIP6 – CONTROL OF WORK

CIP6.01 SCOPE OF WORK

A. This specification covers the requirements for exercising control of work performed on the Project.

CIP6.02 AUTHORITY OF ENGINEER OR INSPECTOR

A. The work will be done in accordance with the Contract, Plans and Specifications. The Engineer or Inspector will decide all questions which may arise as to the quality or acceptability of materials furnished and work performed and the interpretations of the Plans and Specifications. His decisions will be final, and he will have executive authority to enforce and make effective such decisions and orders.

CIP6.03 CONFORMITY WITH PLANS, SPECIFICATIONS AND SPECIAL PROVISIONS

A. All work performed and all materials furnished shall be in reasonable close conformity with the lines, grades, cross sections, dimensions, details, gradations, physical and chemical characteristics of materials in accordance with tolerances shown on the Plans or indicated in the Specifications and Special Provisions. The limits establishing reasonable close conformity will be as defined in these items of the contract.

B. In the event the City finds that the work performed or the materials used are not within reasonable close conformity with the Plans, Specifications and Special Provisions, the affected material or product shall be removed and replaced or otherwise satisfactorily corrected by and at the expense of the Contractor.

C. Deviations from the Plans and approved working drawings as may be required will in all cases be determined by the City and authorized in writing. Before final acceptance of the project is issued by the City, the Contractor shall provide the City with a set of record drawings for the project certified by the Engineer of record.

CIP6.04 COORDINATION OF PLANS, SPECIFICATIONS AND SPECIAL PROVISIONS

A. The Specifications, the accompanying Plans, Special Provisions, and Supplemental Agreements, are essential parts of the Contract, and a requirement occurring in one is as binding as though occurring in all. They are intended to be co-operative and to describe and provide for a complete work. In cases of disagreement, figured dimensions shall govern over scaled dimensions, the Plans shall govern over Specifications, and Special Provisions shall govern over both Specifications and Plans.

CIP6.05 AUTHORITY AND DUTIES OF INSPECTORS

A. Inspectors will be authorized to inspect all work done and all materials furnished. Such inspection may extend to all or to any part of the work and to the preparation or Manufacturer of the materials to be used. Such inspection will not relieve the Contractor from any obligation to perform the work in accordance with the requirements of the Specifications. In case of any dispute arising between the Contractor and the Inspector as to materials furnished or the manner of performing the work, the Inspector will have authority to reject materials or suspend work until the question at issue can be referred to and decided by the City. The Inspector will not be authorized to revoke, alter, enlarge, or release any requirement of these Specifications, nor to approve or accept any portion of work, nor to issue instruction contrary to the Plans and Specifications. He will in no case act as foreman or perform other duties for the Contractor nor interfere with the management of the work.

CIP6.06 PLANT

A. The Contractor shall furnish plant and equipment which will be efficient, appropriate and large enough to secure a satisfactory quality of work and a rate of progress which will insure the completion of the work within the time stipulated in the Proposal. If at any time such plant appears to the Engineer to be inefficient, inappropriate or insufficient for securing the quality of work required or for producing the rate of progress aforesaid, he may order the Contractor to increase the efficiency, change the character or increase the plant and equipment, and the Contractor shall conform to such order. Failure of the Engineer to give such order shall in no way relieve the Contractor of his obligations to secure the quality of work and rate of progress required.

CIP6.07 PRIVATE LAND

A. The Contractor shall not enter or occupy private land outside of easements, except by written permission of the respective landowner.

CIP6.08 PIPE LOCATIONS

A. Pipelines shall be located substantially as indicated on the Plans, but the Engineer and the City reserve the right to make such modifications in locations as may be found desirable to avoid interference with existing structures or for other reasons. Where fittings are noted on the Plans, such notation is for the Contractor's convenience and does not relieve him from laying and jointing different or additional items where required.

CIP6.09 OPEN EXCAVATIONS

A. All open excavations shall be adequately safeguarded by providing temporary barricades, caution signs, lights and other means to prevent accidents to persons, and damage to property. The Contractor shall, at his own expense, provide suitable and safe bridges and other crossings for accommodating travel by pedestrians and workmen. Bridges provided for access during construction shall be removed when no longer required. The length or size of excavation will be controlled by the particular surrounding conditions, but shall always be confined to the limits prescribed by the Engineer. If the excavation becomes a hazard, or if it excessively restricts traffic at any point, the Engineer may require special construction procedures such as limiting the length of the open trench, prohibiting stacking excavated material in the street, and requiring that the trench shall not remain open overnight. The Contractor shall take precautions, such as fences and barricades, to prevent injury to the public due to open trenches. All trenches, excavated material, equipment, or other obstacles, which could be dangerous to the public, shall be well lighted at night. All trenches shall conform to the requirements of OSHA.

CIP6.10 TEST PITS

A. Test pits for the purpose of locating underground pipelines or structures in advance of the construction shall be excavated and backfilled by the Contractor at the direction of the Engineer or the City. Test pits shall be backfilled immediately after their purpose has been satisfied and the surface restored and maintained in a manner satisfactory to the Engineer and the City.

CIP6.11 MAINTENANCE OF TRAFFIC

A. Unless permission to close a street is received in writing from the proper authority, all excavated material shall be placed so that vehicular and pedestrian traffic may be maintained at all times. If the Contractor's operations cause traffic hazards, he shall repair the road surface, provide temporary ways, erect wheel guards or fences, or take other measures for safety satisfactory to the Engineer and the City.

B. Detours around construction will be subject to the approval of the City and the Engineer. Where detours are permitted, the Contractor shall provide all necessary barricades and signs as required to divert the flow of traffic. While traffic is detoured, the Contractor shall expedite construction operations and periods when traffic is being detoured will be strictly controlled by the City.

C. The Contractor shall take precautions to prevent injury to the public due to open trenches. Night watchmen may be required where special hazards exist, or police protection provided for traffic while work is in

progress. The Contractor shall be fully responsible for damage or injuries whether or not police protection has been provided.

CIP6.12 BLASTING

A. No blasting shall be allowed unless approved in writing by the City of Georgetown.

CIP6.13 CARE AND PROTECTION OF PROPERTY

A. The Contractor shall be responsible for the preservation of all public and private property, and shall use every precaution necessary to prevent damage thereto. If any direct or indirect damage is done to public or private property by or on account of any act, omission, neglect, or misconduct in the execution of the work on the part of the Contractor, such property shall be restored by the Contractor, at his expense, to a condition equal or better than existing before the damage was done, or he shall make good the damage in some other manner acceptable to the Engineer and the City.

CIP6.14 MAINTENANCE OF FLOW

A. The Contractor shall, at his own cost, provide for the flow of sewers, drains and water courses interrupted during the progress of the work, and shall immediately cart away and remove all offensive matter. The entire procedure of maintaining existing flow shall be fully discussed with the Engineer and the City well in advance of the interruption of any flow.

CIP6.15 COOPERATION WITHIN THIS CONTRACT

A. The Contractor shall cooperate with Subcontractors or trades, and shall assist in incorporating the work of other trades where necessary or required.

B. Cutting and patching, drilling and fitting shall be carried out where required by the Contractor and his Subcontractor having jurisdiction, unless otherwise indicated herein or directed by the Engineer or the City.

CIP6.16 CLEANUP

A. During the course of the work, the Contractor shall keep the site of his operations in as clean and neat a condition as is possible. The Contractor shall dispose of all rubbish resulting from the construction work and, at the conclusion of the work, he shall remove and haul away any surplus excavation, broken pavement, lumber, equipment, temporary structures, and any other refuse remaining from the construction operations, and shall leave the entire site of the work in a neat and orderly condition.

CIP6.17 FINAL INSPECTION

A. Whenever the work provided for in, and contemplated under, the contract has been satisfactorily completed, the City will make the "Final Inspection". If the work is found to be satisfactory, the Contractor will be notified in writing of the acceptance of the same. The City will require a Certificate of Completion and Final Acceptance from the Inspector before any building, electric or plumbing permits will be issued or any City utilities provided. No such Certificate will be issued until all monuments have been set and record drawing reviewed by the Engineer of Record are provided to the City. If items are found in need of repair or completion, a final punch list will be generated and the items shall be completed by the Contractor. The City will inspect the punch list items one time following their completion. Any subsequent inspections due to inadequate repair or completion of the punch list items shall be paid for by the Contractor or Developer at $200.00 per inspection.

B. Final acceptance of the Project or Development does not relieve the Contractor or Developer of the responsibility of insuring all work shown on the Plans has been completed. If any portion of the work is found at a later date to be inferior or incomplete, the Contractor or Developer shall replace or complete the work at no expense to the City.

CIP6.18 PAYMENT

A. No separate payment will be made for work performed in accordance with this section of the specifications, and the cost thereof shall be included in the appropriate items of the Proposal and Bid Schedule.

END OF SECTION

TECHNICAL SPECIFICATIONS

SECTION CIP7 – CONTROL OF MATERIALS

CIP7.01 SCOPE OF WORK

A. This specification covers the requirements for exercising control of materials used on the Project.

CIP7.02 SOURCES OF SUPPLY AND QUALITY OF MATERIALS

A. The source of supply of each of the materials shall be approved by the City before any deliveries and at the option of the City, may be sampled and tested for determining compliance with the governing Specifications by the City before delivery begins. If it is found after trial that sources of supply previously approved do not produce uniform and satisfactory products, or if the product from any source proves unacceptable at any time, the Contractor shall furnish materials from other approved sources. Only materials conforming to the requirements of these Specifications and approved by the City shall be used in the work. All materials being used are subject to inspection or test at any time during their preparation or use. Any materials which have been tested and accepted at the source of supply may be subjected to a check test after delivery and all materials which, when retested, do not meet approval or have in any way become unfit for use shall not be used in the work.

B. Throughout these Specifications where reference is made to ASTM, AASHTO or bulletins of the Texas Department of Transportation for the quality of materials or sampling and testing, the most current standard, tentative standard or bulletin issued prior to the date of the proposal shall govern.

CIP7.03 SAMPLES AND TEST

A. All materials, before being incorporated in the work, shall be inspected, tested and approved by the City and any work in which materials are used without prior test and approval or written permission of the City may be ordered removed and replaced at the Contractor's expense. The Contractor shall be responsible for and pay for all charges of testing laboratories for services in conjunction with initial tests made on all imported materials to the project site including but not limited to embedment materials, fill materials, backfill materials, select material, crushed limestone base,sub-base, concrete, steel, wood forms, liquid asphalt, aggregate, water, cement, guard rail etc. Sampling and testing of all materials, on the project site will be coordinated by the Contractor and paid for by the City. The selection of the method of test shall be designated by the City. Where tests are required, other than those made in the laboratory, for the purpose of control in the manufacture of a construction item, the Contractor will be required to furnish such facilities and equipment as may be necessary to perform the tests and inspection and shall be responsible for calibration of all test equipment required. When requested, the Contractor shall furnish a complete written statement of the origin, composition, and/or manufacture of any or all materials that are to be used in the work. Testing of all materials and work shall conform to the Texas Department of Transportation "Manual of Testing Procedures" which outlines testing methods and procedures. Other Texas Department of Transportation Bulletins shall apply.

CIP7.04 PAYMENT

A. No separate payment will be made for work performed under this section of the specifications, and the cost thereof shall be included in the appropriate items of the Proposal and Bid Schedule.

END OF SECTION

TECHNICAL SPECIFICATIONS

SECTION CIP8 – LEGAL RELATIONS AND RESPONSIBILITIES TO THE PUBLIC

CIP8.01 SCOPE OF WORK

A. This specification covers the requirements for complying with all Federal, State, and local laws, ordinances, and regulations, which in any manner affect the conduct of the work on the Project.

CIP8.02 LAWS TO BE OBSERVED

A. The Contractor shall make himself familiar with and at all times shall observe and comply with all Federal, State, and local laws, ordinances, and regulations which in any manner affect the conduct of the work and shall indemnify and save harmless the City and its representatives against any claim arising from the violation of any such law, ordinance, or regulation, whether by himself or by his employees.

CIP8.03 PERMITS, LICENSES AND TAXES

A. The Contractor shall procure all permits and licenses, pay all charges, fee and taxes, and give all notices necessary and incident to the due and lawful prosecution of the work.

CIP8.04 RESTORATION OF SURFACES OPENED BY PERMIT

A. The Contractor shall not allow any party to make an opening in the highway or street unless a duly authorized permit signed by the owner of the facility is presented. Until the acceptance of the work, the Contractor shall make all necessary repairs in the roadway where openings have been made by due authority.

CIP8.05 PUBLIC SAFETY AND CONVENIENCE

A. The safety of the public and the convenience of traffic shall be regarded as of prime importance. Unless otherwise shown on the Plans or except as herein provided, all portions of the highway and street shall be kept open to traffic. It shall be the entire responsibility of the Contractor to provide for traffic along and across the highway and streets as well as for ingress and egress to private property all as specified herein, as shown on the Plans or as directed by the City.

B. The Contractor shall plan and execute his operations in a manner that will cause the minimum interference with traffic. The Contractor shall secure the City's approval of his proposed plan of operation, sequence of work and methods of providing for the safe passage of traffic before it is placed into operation. If at any time during construction, the approved plan does not accomplish the intended purpose, due to weather or other conditions affecting the safe handling of traffic, the Contractor shall immediately make necessary changes in accordance with the latest version of the TMUTCD to correct the unsatisfactory conditions.

C. If due to rains or other reasons, the shoulders, slopes and ditches become unsatisfactory for handling traffic, construction operations shall be suspended and the base course or surface area shall be opened to traffic. Where the Specifications require that traffic be carried over or along the proposed work, construction operations shall be so prosecuted and new material so kept that placement and spreading will allow the passage of traffic in comfort and safety.

D. Where an Asphalt Surface Treatment is placed for the full width in an operation, traffic shall be carried on the shoulder slopes and ditches where appropriate. During the operation of placing asphalt and aggregate, the surface or pavement shall not be closed to traffic for a period of more than 45 minutes.

E. During construction of proposed structures, unless otherwise shown on the Plans, the Contractor shall provide and maintain detours including temporary structures or crossovers of adequate structural design as may be required for the safety and convenience of the traffic.

F. At night or otherwise, all equipment not in use shall be stored in such manner and such locations as not to interfere with the safe passage of traffic. The Contractor shall provide and maintain flagmen at such points and for such periods of time as may be required to provide for the safety and convenience of public travel and Contractor's personnel, and as directed by the City. Flagmen shall have a sense of responsibility for the safety of the public and the workers, adequate training in safe temporary traffic control practices, average intelligence, good physical condition, including sight, mobility, and hearing, mental alertness and the ability to react in an emergency, courteous but firm manner, and a neat appearance. When directing traffic, flagmen shall use the standard attire, flags and signals and follow the flagging procedure set forth in "Instructions to Flagmen" published by the Texas Department of Transportation.

CIP8.06 BARRICADES AND DANGER, WARNING AND DETOUR SIGNS

A. The Contractor shall place and maintain in good condition, standard barricades and warning signs at each end of the project and at other locations therein as called for on the Plans or as called for in the Contractor's approved plan of operation. The signs shall be of standard design as shown on the Plans and in accordance with Texas Department of Transportation Standards.

B. All barricades and signs remaining in place at night and all points of hazard to traffic shall be either retro-reflective with a material that has a smooth, sealed outer surface or illuminated by lights to show the same shape and similar color both day and night. Signs which refer to construction operations which do not apply after work has ended for the day, shall be moved to points out of the clear zone that are not visible to traffic until construction is resumed.

C. The Contractor may provide special signs not covered by the Plans to protect the traveling public against special conditions or hazards, provided however, that such signs are first approved by the City.

D. Upon completion of the work, all signs and evidences thereof shall be removed by the Contractor.

CIP8.07 PROJECT IDENTIFICATION SIGNAGE

A. Project identification signage shall be in accordance with Section CIP14- PROJECT IDENTIFICATION SIGNAGE. This does not apply to private development Projects.

CIP8.08 USE OF EXPLOSIVES

A. When the use of explosives is necessary for the prosecution of the work, the Contractor shall use the utmost care not to endanger life or property. All explosives shall be stored in a secure manner, and all storage places shall be marked clearly, "DANGEROUS - EXPLOSIVES". The method of storing and handling explosives and highly flammable materials shall conform with Federal and State laws and regulations. **The use of explosives must be approved in writing by the City prior to any use.**

B. In advance of doing any blasting work, involving the use of electric blasting caps within 200 feet of any railroad track, the Contractor shall give at least 24 hours advance notice to the nearest Roadmaster, Section Foreman, Agent, Signal Maintainer or Telegraph Operator with the request that his Superintendent be advised immediately of the pending use of explosives.

CIP8.09 PROTECTION OF ADJOINING PROPERTY

A. The Contractor shall take proper measures to protect the adjacent or adjoining property which might be damaged by any process of construction, and in case of any injury or damage resulting from any act or omission on the part of or on behalf of the Contractor, he shall restore at his own expense the damaged property to a condition equal or better than that existing before such injury or damage was done, or he shall make good such injury or damage in an acceptable manner.

CIP8.10 RESPONSIBILITY FOR DAMAGE CLAIMS

A. The Contractor shall save harmless the City from all suits, actions or claims brought on account of any injuries or damages sustained by any person or property in consequence of any neglect in safeguarding the work by the Contractor, or from any claims or amounts arising or recovered under the "Workmen's Compensation Laws" or any other laws. He shall be responsible for all damage or injury to property of any character occurring during the prosecution of the work resulting from any act, omission, neglect, or misconduct on his part in the manner or method of executing the work; or from his failure to properly execute the work; or from defective work or materials. He shall not be released from such responsibility until all claims have been settled and suitable evidence to that effect furnished the Council.

B. The Contractor's attention is directed to the fact that pipelines and other underground installations as may be shown on the Plans have been taken from the best available information. There may be other pipelines or installations. The Contractor shall save harmless the City from any and all suits or claims resulting from damage by his operations to any pipeline or underground installation.

CIP8.11 CONTRACTOR'S RESPONSIBILITY FOR WORK

A. Until the final acceptance of the work by the City as evidenced in writing, it shall be under the charge and care of the Contractor. The Contractor shall rebuild and make good at his own expense all injuries and damages to the work occurring before its completion and acceptance. In case of suspension of work for any cause, the Contractor shall be responsible for the preservation of all materials. He shall provide suitable drainage of the roadway and shall erect temporary structures where required. The Contractor shall maintain the roadway in good and passable condition until final acceptance.

B. Wherever, in the opinion of the City, any roadway or portion thereof is in suitable condition for travel, it shall be opened to traffic, as may be directed, and such opening shall not be held to be in any way the final acceptance of the roadway or any part of it or as a waiver of any of the provisions of the Contract. Where it is considered by the City to be in the public interest, any substantially completed roadway or portion thereof may be opened to traffic.

CIP8.12 PERSONAL LIABILITY OF PUBLIC OFFICIALS

A. In carrying out the provisions of the contract or in exercising any power or authority granted thereunder, there shall be no liability upon the City or its authorized assistant, either personally or otherwise, as they are agents and representatives of the City.

CIP8.13 PROSECUTION OF WORK

A. Prior to beginning construction operations, the Contractor shall submit to the City a chart or brief outlining the manner of prosecution of the work that he intends to follow in order to complete the Contract. Before any work is started on the project or development, a "Pre-Construction Conference", shall be held between the City, Contractor, Developer and any other interested parties.

CIP8.14 PAYMENT

A. No separate payment shall be made for work performed in accordance with this section of the specifications, and the cost thereof shall be included in the appropriate items of the Proposal and Bid Schedule.

END OF SECTION

SECTION CIP9 – ENVIRONMENTAL PROTECTION PROCEDURES

CIP9.01 SCOPE OF WORK

A. This specification covers the requirements for the prevention of environmental pollution in conformance with applicable laws and regulations, during and as the result of construction operations under this Contract. For the purpose of this specification, environmental pollution is defined as the presence of chemical, physical, or biological elements or agents which adversely affect human health or welfare; unfavorably alter ecological balances of importance to human life; affect other species of importance to man; or degrade the utility of the environment for aesthetic and/or recreational purposes.

B. The control of environmental pollution requires consideration of air, water and land, and involves management of noise and solid waste, as well as other pollutants.

C. Schedule and conduct all work in a manner that will minimize the erosion of soils in the area of the work. Provide erosion control measures such as diversion channels, sedimentation or filtration systems, berms, seeding, mulching or other special surface treatments as are required to prevent silting and muddying of streams, rivers, impoundments, lakes, etc. All erosion control measures shall be in place in an area prior to any construction activity in that area. Specific requirements are specified in Section G6-SEDIMENTATION AND TEMPORARY EROSION CONTROL.

D. These Specifications are intended to ensure that construction is achieved with a minimum of disturbance to the existing ecological balance between a water resource and its surroundings. These are general guidelines. It is the Contractor's responsibility to determine the specific construction techniques to meet these guidelines.

E. All phases of sedimentation and erosion control shall comply with and be subject to the approval of the Texas Commission on Environmental Quality, and U.S. EPA.

CIP9.02 SUBMITTALS

A. Within 30 days after the Notice to Proceed, the Contractor shall submit to the Engineer or the City for approval, technical product literature including descriptions of any special operations required, temporary roads and embankments, and all other pertinent data to illustrate conformance to the specification found within.

CIP9.03 APPLICABLE REGULATIONS

A. Comply with all applicable Federal, State and local laws and regulations concerning environmental pollution control and abatement.

CIP9.04 NOTIFICATIONS

A. The Engineer and/or City will notify the Contractor in writing of any non-compliance with the foregoing provisions or of any environmentally objectionable acts and corrective action to be taken. State or local agencies responsible for verification of certain aspects of the environmental protection requirements shall notify the Contractor in writing, through the Engineer, of any non-compliance with State or local requirements. The Contractor shall, after receipt of such notice from the Engineer or from the regulatory agency through the Engineer, immediately take corrective action. Such notice, when delivered to the Contractor or his/her authorized representative at the site of the work, shall be deemed sufficient for the purpose. If the Contractor fails or refuses to comply promptly, the City may issue an order stopping all or part of the work until satisfactory corrective action has been taken. No part of the time lost due to any such stop orders shall be made the subject of a claim for extension of time or for excess costs or damages by the Contractor unless it is later determined that the Contractor was in compliance.

CIP9.05 IMPLEMENTATION

A. Prior to commencement of the work, the Contractor shall meet with the City to develop mutual understandings relative to compliance with this provision and administration of the environmental pollution control program. All environmental and pollution control features shall be in place prior to any construction.

B. Remove temporary environmental control features, when approved by the Engineer, and incorporate permanent control features into the Project at the earliest practical time.

CIP9.06 PROTECTION OF WATERWAYS

A. The Contractor shall observe the rules and regulations of the State of Texas and agencies of the U.S. Government prohibiting the pollution of any lake, stream, river, or wetland by the dumping of any refuse, rubbish, dredge material, or debris therein.

B. Contractors are specifically cautioned that disposal of materials into any waters of the State must conform with the requirements of the Texas Commission on Environmental Quality, and an applicable permit from the U.S. Army Corps of Engineers.

C. The Contractor shall be responsible for providing holding ponds or an approved method which will handle, carry through, or divert around his work all flows, including storm flows and flows created by construction activity, so as to prevent silting of waterways or flooding damage to the property or adjacent properties.

D. The Contractor is responsible for researching the need for a U.S. EPA NPDES permit for the construction site. If one is required, the Contractor is responsible for obtaining the permit and for monitoring the site per the permit requirements until final completion.

CIP9.07 DISPOSAL OF EXCESS EXCAVATION AND OTHER WASTE MATERIALS

A. Excess excavated material not required or suitable for backfill and other waste material must be disposed of at sites approved by the City and Engineer.

B. Unacceptable disposal sites, include, but are not limited to, sites within a wetland or critical habitat and sites where disposal will have a detrimental effect on surface water or groundwater quality.

C. The Contractor may make his own arrangements for disposal subject to submission of proof to the Engineer that the Owner(s) of the proposed site(s) has a valid fill permit issued by the appropriate governmental agency and submission of a haul route plan including a map of the proposed route(s).

D. The Contractor shall provide watertight conveyance of any liquid, semi-liquid, or saturated solids which tend to bleed or leak during transport. No liquid loss from transported materials will be permitted whether being delivered to the construction site or being hauled away for disposal. Fluid materials hauled for disposal must be specifically acceptable at the selected disposal site.

CIP9.08 USE OF CHEMICALS

A. All chemicals used during project construction or furnished for project operation, whether herbicide, pesticide, disinfectant, polymer, reactant or of other classification, must show approval of either the U.S. Environmental Protection Agency or the U.S. Department of Agriculture or any other applicable regulatory agency. Use of all such chemicals and disposal of residues shall be in conformance with the Manufacturer's instructions.

B. Any oil or other hydrocarbon spilled or dumped during construction must be excavated and completely removed from the site prior to final acceptance. Soil contaminated by the Contractor's operations shall become the property of the Contractor, who will bear all costs of testing and disposal.

C. Before a Contractor commences work, the following steps shall be completed.

1. The City will inform the Contractor of his rights under the Texas Hazards Communication Act.

2. The City will provide a copy of the Chemical List giving the hazardous chemicals to which the Contractor, his employees and agents may be exposed to on the Project site.

3. The City will provide copies of all Material Safety Data Sheets (MSDS) to the Contractor for the hazardous chemicals, which he may be exposed to on the Project site.

4. The City will inform the Contractor of his obligation to inform his employees and agents of each of the above requirements.

5. The Contractor shall provide MSDS for all hazardous chemicals he may bring onto the project site that the City's employees may be exposed to.

6. The Contractor shall sign a Contractor Acknowledgement certifying that he/she has received the information provided by the City on hazardous chemicals and maintain the Acknowledgement with the original Contract.

CIP9.09 EROSION CONTROL

A. Provide positive means of erosion control such as shallow ditches around construction to carry off surface water. Erosion control measures, such as siltation basins, silt fences, rock berms, hay check dams, mulching, jute netting and other equivalent techniques, shall be used as appropriate. Flow of surface water into excavated areas shall be prevented. Ditches around the construction area shall also be used to carry away water resulting from dewatering of excavated areas. At the completion of the work, ditches shall be backfilled and the ground surface restored to original condition.

CIP9.10 PROTECTION OF STREAMS

A. Care shall be taken to prevent, or reduce to a minimum, any damage to any stream from pollution by debris, sediment or other material, or from the manipulation of equipment and/or materials in or near such streams. Water that has been used for washing or processing, or that contains oils or sediments that will reduce the quality of the water in the stream, shall not be directly returned to the stream. Such waters will be diverted through a settling basin or filter before being directed into the streams.

B. The Contractor shall not discharge water from dewatering operations directly into any live or intermittent stream, channel, wetlands, surface water or any storm sewer. Water from dewatering operations shall be treated by filtration, settling basins, or other approved method to reduce the amount of sediment contained in the water to allowable levels.

C. All preventative measures shall be taken to avoid spillage of petroleum products and other pollutants. In the event of any spillage, prompt remedial action shall be taken in accordance with a Contingency Action Plan approved by the Texas Commission on Environmental Quality. Contractor shall submit two (2) copies of approved contingency plans to the Engineer.

D. Water being flushed from structures or pipelines after disinfection, with a Cl_2 residue of 2 mg/l or greater, shall be treated with a dechlorination solution, in a method approved by the Engineer, prior to discharge.

CIP9.11 PROTECTION OF LAND RESOURCES

A. Land resources within the project boundaries and outside the limits of permanent work shall be restored to a condition, after completion of construction, that will appear to be natural and not detract from the appearance of the Project. Confine all construction activities to the appropriate areas shown on the Plans.

B. Outside of areas requiring earthwork for the construction of the new facilities, the Contractor shall not deface, injure, or destroy trees or shrubs, nor remove or cut them without prior approval. No ropes, cables, or guys shall be fastened or attached to any existing nearby trees for anchorage unless specifically authorized by the Engineer. Where such special emergency use is permitted, first wrap the trunk with a sufficient thickness of burlap or rags over which softwood cleats shall be tied before any rope, cable, or wire is placed. The Contractor shall in any event be responsible for any damage resulting from such use.

C. Where trees may possibly be defaced, bruised, injured, or otherwise damaged by the Contractor's equipment, dumping or other operations, protect such trees by placing boards, planks, or poles around them in accordance with Section S6- SEDIMENTATION AND TEMPORARY EROSION CONTROL. Monuments and markers shall be protected similarly before beginning operations near them.

D. Any trees or other landscape feature scarred or damaged by the Contractor's equipment or operations shall be restored as nearly as possible to its original condition. The Engineer or the City will decide what method of restoration shall be used and whether damaged trees shall be treated and healed or removed and disposed of.

All scars made on trees by equipment, construction operations, or by the removal of limbs larger than one (1) inch in diameter shall be coated as soon as possible with an approved tree wound dressing. All trimming or pruning shall be performed in an approved manner by experienced workmen with saws or pruning shears. Tree trimming with axes will not be permitted.

Climbing ropes shall be used where necessary for safety. Trees that are to remain, either within or outside established clearing limits, that are subsequently damaged by the Contractor and are beyond saving in the opinion of the Engineer or the City, shall be immediately removed and replaced.

E. The locations of the Contractor's storage, and other construction buildings, required temporarily in the performance of the work, shall be cleared portions of the job site or areas to be cleared as shown on the Plans and shall require written approval of the Engineer and shall not be within wetlands or floodplains. The preservation of the landscape shall be an imperative consideration in the selection of all sites and in the construction of buildings. Plans showing storage facilities shall be submitted for approval of the Engineer or the City.

F. If the Contractor proposes to construct temporary roads or embankments and excavations for plant and/or work areas, he/she shall submit the following for approval at least 10 days prior to scheduled start of such temporary work.

1. A layout of all temporary roads, excavations and embankments to be constructed within the work area.

2. Details of temporary road construction.

3. Plans and cross sections of proposed embankments and their foundations, including a description of proposed materials.

4. A landscaping drawing showing the proposed restoration of the area. Removal of any trees and shrubs outside the limits of existing clearing area shall be indicated. The drawing shall also indicate location of required guard posts or barriers required to control vehicular traffic passing close to trees and shrubs to be maintained undamaged. The drawing shall provide for the obliteration of construction scars as such and shall provide for a natural appearing final condition of the area. Modification of the Contractor's approved drawings shall be made only with the written approval of the Engineer. No unauthorized road construction, excavation or embankment construction including disposal areas will be permitted.

G. Remove all signs of temporary construction facilities such as haul roads, work areas, structures, foundations of temporary structures, stockpiles of excess waste materials, or any other vestiges of construction as directed by the Engineer or the City. It is anticipated that excavation, filling and plowing of roadways will be required to restore the area to near natural conditions which will permit the growth of vegetation thereon. The disturbed areas shall be prepared and seeded as described in Section G7-LOAMING, HYDROSEEDING AND PERMANENT EROSION CONTROL, or as approved by the Engineer or the City.

H. All debris and excess material will be disposed of outside wetland or floodplain areas in an environmentally sound manner.

CIP9.12 PROTECTION OF AIR QUALITY

A. Burning. The use of burning at the project site for the disposal of refuse and debris will not be permitted.

B. Dust Control. The Contractor will be required to maintain all excavations, embankment, subgrade, road bed, base course stockpiles, access roads, plant sites, waste areas, borrow areas, and all other work areas within or outside the project boundaries free from dust which could cause the standards for air pollution to be exceeded, and which would cause a hazard or nuisance to others.

C. An approved method of stabilization consisting of sprinkling or other similar methods will be permitted to control dust. The use of petroleum products is prohibited. The use of chlorides may be permitted with approval from the Engineer or the City.

D. Sprinkling, to be approved, must be repeated at such intervals as to keep all parts of the disturbed area at least damp at all times, and the Contractor must have sufficient competent equipment on the job to accomplish this if sprinkling is used. Dust control shall be performed as the work proceeds and whenever a dust nuisance or hazard occurs, as determined by the Engineer or the City.

CIP9.13 MAINTENANCE OF POLLUTION CONTROL FACILITIES DURING CONSTRUCTION

A. During the life of this Contract, the Contractor shall maintain all facilities constructed for pollution control as long as the operations creating the particular pollutant are being carried out or until the material concerned has become stabilized to the extent that pollution is no longer being created.

CIP9.14 NOISE CONTROL

A. The Contractor shall make every effort to minimize noises caused by his/her operations. Equipment shall be equipped with silencers or mufflers designed to operate with the least possible noise in compliance with State and Federal regulations.

CIP9.15 PAYMENT

A. No separate payment will be made for work performed in accordance with this section of the specifications, and the cost thereof shall be included in the appropriate items of the Proposal and Bid Schedule.

END OF SECTION

SECTION CIP10 - SUBMITTALS

CIP10.01 SCOPE OF WORK

A. This specification covers the requirements for submissions applicable to the following work-related submittals: Shop Drawings, Product Data, Samples, Mock Ups, Construction Photographs, and Construction or Submittal Schedules. Detailed submittal requirements will be specified in the technical specification sections.

B. All submittals shall be clearly identified by reference to Specification Section, Paragraph, Drawing No. or Detail as applicable. Submittals shall be clear and legible and of sufficient size for sufficient presentation of data.

CIP10.02 SHOP DRAWINGS, PRODUCT DATA, SAMPLES

A. Shop Drawings

1. Shop drawings as specified in individual work Sections include, but are not necessarily limited to, custom-prepared data such as fabrication and erection/installation (working) drawings, scheduled information, setting diagrams, actual shopwork manufacturing instructions, custom templates, special wiring diagrams, coordination drawings, individual system or equipment inspection and test reports including performance curves and certifications, as applicable to the Work.

2. All shop drawings submitted by subcontractors for approval shall be sent directly to the Contractor for checking. The Contractor shall be responsible for their submission at the proper time so as to prevent delays in delivery of materials.

3. The Contractor shall check all subcontractor's shop drawings regarding measurements, size of members, materials, and details to satisfy himself that they conform to the intent of the Plans and Specifications. Shop drawings found to be inaccurate or otherwise in error shall be returned to the subcontractors for correction before submission thereof.

4. All details on shop drawings submitted for approval shall show clearly the relation of the various parts to the main members and lines of the structure, and where correct fabrication of the work depends upon field measurements, such measurements shall be made and noted on the Plans before being submitted for approval.

B. Product Data

1. Product data as specified in individual Sections, include, but are not necessarily limited to, standard prepared data for manufactured products (sometimes referred to as catalog data), such as the Manufacturer's product specification and installation instructions, availability of colors and patterns, Manufacturer's printed statements of compliance’s and applicability, roughing-in diagrams and templates, catalog cuts, product photographs, standard wiring diagrams, printed performance curves and operational-range diagrams, production or quality control inspection and test reports and certifications, mill reports, product operating and maintenance instructions and recommended spare-parts listing and printed product warranties, as applicable to the work.

C. Samples

1. Samples specified in individual Sections, include, but are not necessarily limited to, physical examples of the work such as sections of manufactured or fabricated work, small cuts or containers of materials, complete units of repetitively-used products, color/texture/pattern swatches and range sets, specimens for coordination of visual effect, graphic symbols and units of work to be used by the Engineer or the City for independent inspection and testing, as applicable to the work.

CIP10.03 CONTRACTOR'S RESPONSIBILITIES

A. The Contractor shall review shop drawings, product data and samples, including those by subcontractors, prior to submission to determine and verify the following:

1. Field measurements

2. Field construction criteria

3. Catalog numbers and similar data

4. Conformance with the Specifications

B. Each shop drawing, sample and product data submitted by the Contractor shall have affixed to it the following Certification Statement including the Contractor's Company name and signed by the Contractor: "Certification Statement: by this submittal, I hereby represent that I have determined and verified all field measurements, field construction criteria, materials, dimensions, catalog numbers and similar data and I have checked and coordinated each item with other applicable approved shop drawings and all Contract requirements." Shop drawings and product data sheets eleven by seventeen (11” x 17”) and smaller shall be bound together in an orderly fashion and bear the above Certification Statement on the cover sheet. The cover sheet shall fully describe the packaged data and include a listing of all items within the package. Provide to the Resident Project Representative a copy of each submittal transmittal sheet for shop drawings, product data and samples at the time of submittal of said drawings, product data and samples to the Engineer or the City.

C. The Contractor shall utilize a 10 character submittal identification numbering system in the following manner:

1. The first character shall be a D, S, P, M, or R, which represents Shop/Working Drawing and other Product Data (D), Sample (S), Preliminary Submittal (P), Operating/Maintenance Manual (M), or Request for Information (R).

2. The next sequence shall be the applicable Specification Section Number.

3. The next three (3) digits shall be the numbers 001 - 999 to sequentially number each initial separate item or drawing submitted under each specific Section number.

4. The last character shall be a letter, A-Z, indicating the submission, or resubmission of the same Drawing (i.e. A=1st submission, B=2nd submission, C=3d submission, etc.). A typical submittal number would be as follows:

D-C2-008-B

D = Shop Drawing

C2 = Specification Section for Concrete for Structures C2

008 = The eighth initial submittal under this specification section

B = The second submission (first resubmission) of that particular shop drawing

D. Notify the Engineer or the City in writing, at the time of submittal, of any deviations in the submittals from the requirements of the Contract Documents.

E. The review and approval of shop drawings, samples or product data by the Engineer or the City shall not relieve the Contractor from his/her responsibility with regard to the fulfillment of the terms of the Contract. All risks of error and omission are assumed by the Contractor and the Engineer or the City will have no responsibility therefore.

F. No portion of the work requiring a shop drawing, sample, or product data shall be started nor shall any materials be fabricated or installed prior to the approval or qualified approval of such item. Fabrication performed, materials purchased or on-site construction accomplished which does not conform to

approved shop drawings and data shall be at the Contractor's risk. The City will not be liable for any expense or delay due to corrections or remedies required to accomplish conformity.

G. Project work, materials, fabrication, and installation shall conform with approved shop drawings, applicable samples, and product data.

CIP10.04 SUBMISSION REQUIREMENTS

A. Make submittals promptly in accordance with approved schedule, and in such sequence as to cause no delay in the Work or in the work of any other Contractor.

B. Each submittal, appropriately coded, will be returned within 30 working days following receipt of submittal by the Engineer or the City.

C. Number of submittals required:

1. Shop Drawings as defined in Paragraph G10.02 A: Six (6) copies.

2. Product Data as defined in Paragraph G10.02 B: Six (6) copies.

3. Samples: Submit the number stated in the respective Specification Sections.

D. Submittals shall contain:

1. The date of submission and the dates of any previous submissions.

2. The Project title and number.

3. Contractor identification.

4. The names of:

a. Contractor
b. Supplier
c. Manufacturer

5. Identification of the product, with the specification section number, page and paragraph(s).

6. Field dimensions, clearly identified as such.

7. Relation to adjacent or critical features of the Work or materials.

8. Applicable standards, such as ASTM or Federal Specification numbers.

9. Identification of deviations from Contract Documents.

10. Identification of revisions on re-submittals.

11. Two (2) five-inch by three-inch (5”x3”) blank space for Contractor and Engineer stamps.

CIP10.05 REVIEW OF SHOP DRAWINGS, PRODUCT DATA, WORKING DRAWINGS AND SAMPLES

A. The review of shop drawings, data, and samples will be for general conformance with the design concept and Contract Documents. They shall not be construed as:

1. Permitting any departure from the Contract requirements;

2. Relieving the Contractor of responsibility for any errors, including details, dimensions, and materials; and/or

3. Approving departures from details furnished by the Engineer or the City, except as otherwise

provided herein.

B. The Contractor remains responsible for details and accuracy, for coordinating the work with all other associated work and trades, for selecting fabrication processes, for techniques of assembly, and for performing work in a safe manner.

C. If the shop drawings, data or samples as submitted describe variations and show a departure from the Contract requirements which the Engineer finds to be in the interest of the City and to be so minor as not to involve a change in Contract Price or time for performance, the Engineer may return the reviewed drawings without noting an exception.

D. Submittals will be returned to the Contractor under one of the following codes.

Code 1 "REVIEWED" is assigned when there are no notations or comments on the submittal. When returned under this code the Contractor may release the equipment and/or material for manufacture.

Code 2 "PROVIDE AS NOTED". This code is assigned when a confirmation of the notations and comments IS NOT required by the Contractor. The Contractor may release the equipment or material for manufacture; however, all notations and comments must be incorporated into the final product.

Code 3 "PROVIDE AS NOTED/CONFIRM". This combination of codes is assigned when a confirmation of the notations and comments IS required by the Contractor. The Contractor may release the equipment or material for manufacture; however, all notations and comments must be incorporated into the final product. This confirmation shall specifically address each omission and nonconforming item that was noted. Confirmation is to be received by the Engineer within 15 calendar days of the date of the Engineer's transmittal requiring the confirmation.

Code 4 "PROVIDE AS NOTED/RESUBMIT". This combination of codes is assigned when notations and comments are extensive enough to require a re-submittal of the package. The Contractor may release the equipment or material for manufacture; however, all notations and comments must be incorporated into the final product. This re-submittal is to address all comments, omissions and non-conforming items that were noted. Re-submittal is to be received by the Engineer within 15 calendar days of the date of the Engineer's transmittal requiring the re-submittal.

Code 5 "NOT APPROVED" is assigned when the submittal does not meet the intent of the Contract Documents. The Contractor must resubmit the entire package revised to bring the submittal into conformance. It may be necessary to resubmit using a different manufacturer/vendor to meet the Contract Documents.

Code 6 "COMMENTS ATTACHED" is assigned where there are comments attached to the returned submittal which provide additional data to aid the Contractor.

Codes 1 through 5 designate the status of the reviewed submittal with Code 6 showing there has been an attachment of additional data.

E. Re-submittals will be handled in the same manner as first submittals. On re-submittals the Contractor shall direct specific attention, in writing on the letter of transmittal and on resubmitted shop drawings by use of revision triangles or other similar methods, to revisions other than the corrections requested by the Engineer, on previous submissions. Any such revisions which are not clearly identified shall be made at the risk of the Contractor. The Contractor shall make corrections to any work done because of this type revision that is not in accordance to the Contract Documents as may be required by the Engineer.

F. Partial submittals may not be reviewed. The Engineer will be the only judge as to the completeness of a submittal. Submittals not complete will be returned to the Contractor, and will be considered "Not Approved" until resubmitted. The Engineer may at his/her option provide a list or mark the submittal directing the Contractor to the areas that are incomplete.

G. If the Contractor considers any correction indicated on the shop drawings to constitute a change to the Contract Documents, the Contractor shall give written notice thereof to the Engineer at least seven (7) working days prior to release for manufacture.

H. When the shop drawings have been completed to the satisfaction of the Engineer, the Contractor shall

carry out the construction in accordance therewith and shall make no further changes therein except upon written instructions from the Engineer.

CIP10.06 DISTRIBUTION

A. Distribute reproductions of approved shop drawings and copies of approved product data and samples, where required, to the job site file and elsewhere as directed by the Engineer. Number of copies shall be as directed by the Engineer but shall not exceed six (6).

CIP10.07 MOCK UPS

A. Mock Up units as specified in individual Sections include, but are not necessarily limited to, complete units of the standard of acceptance for that type of work to be used on the Project. Remove at the completion of the Work or when directed.

CIP10.08 GENERAL PROCEDURES FOR SUBMITTALS

A. Coordination of Submittal Times: Prepare and transmit each submittal sufficiently in advance of performing the related work or other applicable activities, or within the time specified in the individual work sections, of the Specifications, so that the installation will not be delayed by processing times including disapproval and re-submittal (if required), coordination with other submittals, testing, purchasing, fabrication, delivery and similar sequenced activities. No extension of time will be authorized because of the Contractor's failure to transmit submittals sufficiently in advance of the Work.

END OF SECTION

TECHNICAL SPECIFICATIONS

SECTION CIP11 – TRENCH SAFETY REQUIREMENTS

CIP11.01 SCOPE OF WORK

A. This specification covers the requirements to plan, design, construct, install, maintain, monitor, modify as necessary, and remove upon completion, a Trench Safety System as specified herein.

B. The requirements of this Section apply to all trenches which equal or exceed a depth of five (5) feet, measured from the ground surface at the highest side of the trench to the trench bottom.

C. All applicable and non-conflicting portions of Section G4- TRENCHING, BACKFILLING AND COMPACTION apply as appropriate.

CIP11.02 SUBMITTALS

A. Within 30 days after the Notice to Proceed, but not less than 10 calendar days prior to execution of any trench excavation operations, the Contractor shall submit a site specific Trench Safety System Conformance Affidavit stating that operations will be conducted in full conformance with the OSHA Standards.

1. The Conformance Letter shall also describe the Trench Safety System techniques proposed to be used on the Project.

2. Specific references to the applicable OSHA Standards sections shall be included for each technique to be used.

B. The Trench Safety System Plan shall be in writing, site specific and sufficiently detailed and clear to be understandable and usable by all personnel who will be executing, supervising and witnessing the trenching operations. A copy of the Trench Safety System Plan shall be available at the site of trenching operations at all times.

C. If borings and/or detailed geotechnical analyses are required to develop the Trench Safety System Plan, they shall be executed by the Contractor at his cost.

D. For trenches having depths greater than the various limits given in the OSHA Standards (8, 12 or 20 feet, depending on the techniques used), a site specific protective system shall be designed by a Registered Professional Engineer, registered in the State of Texas experienced in soil mechanics and structural design. The design shall be signed, sealed and dated by the Professional Engineer, and it shall identify those specific locations where the design is applicable.

CIP11.03 GENERAL

A. All materials and products incorporated into the Trench Safety System shall be suitable for their intended uses; shall meet all design criteria and parameters used by the Trench Safety System designer; and shall meet all applicable requirements of OSHA Standards.

CIP11.04 METHODS OF PROVIDING FOR TRENCH SAFETY

A. Protective systems referenced in this Section shall be as defined and described in 29 CFR 1962.652, "Requirements for Protective Systems."

B. It is the duty, responsibility and prerogative of the Contractor to determine the specific applicability of a proposed Trench Safety System for each field condition encountered on the Project. Contractor specifically holds the City, Engineer, and any of their designated representatives harmless in any actions resulting from the failure or inadequacy of the Trench Safety System used to complete the Project.

C. Unless otherwise noted on the drawings or excluded below, Sloping/Benching, Trench Shielding with trench boxes, and/or Sheeting/Shoring/Bracing protective systems may be used on this Project.

D. Restrictions on the use of the various protective systems for this Project are as follows:

1. Sloping or Benching. Allowed with prior approval from the City.

2. Trench Shields/Boxes. No restrictions.

3. Sheeting/Shoring/Bracing. No restrictions.

CIP11.05 INSPECTION DUTIES OF CONTRACTOR

A. Provide a Competent Person, as defined in the OSHA Standards, to make frequent inspections of the trenching operations and the Trench Safety System in full conformance with the OSHA Standards.

B. If evidence of a possible cave-in or landslide is apparent, all work in the trench shall immediately cease and not be resumed until all necessary precautions have been taken to safeguard personnel entering the trench.

C. In an emergency situation, which may threaten or affect the safety or welfare of any persons or properties, the Contractor shall act at his discretion to prevent possible damage, injury or loss. Any additional compensation or time extension claimed for such actions shall be considered in view of the cause of the emergency and in accordance with the General Conditions.

CIP11.06 MEASUREMENT AND PAYMENT

A. Payment for the Trench Safety Plan shall be on a Lump Sum price basis, the Lump Sum price being as given in the Bid Proposal.

B. Payment for the Trench Safety Plan Implementation shall be on a unit price basis, the unit price being as given in the Bid Proposal, and the unit of measure being linear feet of trench and/or square foot of bore pit or structure, without regard to whether specific trench safety precautions are required or used for the trench reach being measured.

END OF SECTION

SECTION CIP12 – TESTING OF PIPELINES AND MANHOLES

CIP12.01 SCOPE OF WORK

A. This specification covers the requirements to perform ex-filtration testing and deflection testing of gravity pipelines and to perform pressure and leakage testing of pressure pipelines.

CIP12.02 SUBMITTALS

A. Within 30 days after the Notice to Proceed, the Contractor shall submit to the Engineer or the City for approval, technical product literature including a description of the deflection test procedure for flexible pipe greater than 27-inches in diameter, video inspection of gravity wastewater lines, and all other pertinent data to illustrate conformance to the specification found within.

CIP12.03 GENERAL

A. The entire length of the installed gravity line and the force main shall be field tested for water tightness. Gravity wastewater lines shall be video taped by camera.

B. Hydrostatic pressure and leakage tests shall be made on all pressure pipelines carrying wastewater or water.

C. All labor and equipment, including, but not limited to test pump with regulated by-pass meters and gauges required for conducting pipeline tests, shall be furnished by the Contractor. The Contractor shall furnish equipment and necessary piping as required to transport water used in testing from source to test location.

D. Time and sequence of testing shall be scheduled by the Contractor, subject to observation and approval by the City. The Contractor shall provide adequate labor, tools and equipment to operate valves and to locate and repair any leaks discovered during the initial filling of the pipeline prior to actual testing or during the course of the tests.

CIP12.04 CLEANING

A. At the conclusion of the work, thoroughly clean all pipelines by flushing with water or other means to remove all dirt, stones, pieces of wood, or other material which may have entered the pipes during the construction period. Debris cleaned from the lines shall be removed from the low end of the pipeline. If after this cleaning, obstructions remain, they shall be removed. After the pipelines are cleaned and if the groundwater level is above the pipe or following a heavy rain, the Engineer will examine the pipes for leaks. If any defective pipes or joints are discovered, they shall be repaired, and/or replaced by the Contractor at his expense.

CIP12.05 TEST PROCEDURES FOR GRAVITY PIPELINES, FORCE MAINS AND MANHOLES

A. Scope: After sewers and manholes have been installed and backfilled, subject newly laid gravity lines and manholes to a leakage test. Contractor to furnish all labor, materials, tools and equipment to test lines. Take such precautions as required to prevent damage to lines and appurtenances being tested. Repair any damage resulting from test at Contractor's expense. Conduct test in presence of Engineer or designated City Representative.

B. Test Procedures for Leakage Test of Gravity Sewer: Contractor, at his option, may test lines by hydrostatic or low pressure air test as specified below. However, the Engineer may direct a specific test be performed in specified areas of the Project.

C. Infiltration or Exfiltration Test (for Gravity Sewer)

1. Preparation: Seal ends of line section being tested with water tight plugs, equipped with pipe riser inserted and braced in the inlet of the manholes. Fill section with water 24-hours prior to start of test. Fill slowly from downstream manhole in test section so that no air is trapped in the line. Leave outlets of stacks and service lines exposed and unplugged until after exfiltration test has been made. Outlets terminating below level of test water surface to be temporarily extended upward by installing additional lengths of pipe. After completion of satisfactory test, remove lengths of pipe added for test.

2. Duration of Test: Test for 24-hours. Minimum head of either two (2) feet measured above the crown, inside pipe at upper end of section or four (4) feet measured above trench water table, whichever is higher, so that a net positive of two (2) feet TCEQ is used for testing.

3. Allowable Leakage: Allowable leakage or exfiltration in any individual section under construction shall not exceed 10 gallons per inch of inside diameter per mile of pipe per 24 hours.

D. Low Pressure Air Test

1. Preparation: Clean pipe to be tested by propelling snug fitting inflated rubber ball through the pipe with water or by use of water jet cleaning equipment. After manhole to manhole reach of pipe has been backfilled and cleaned, pneumatic plugs shall be placed in the line at each manhole and inflated to 25 psig. Add air slowly to the section under test until the internal pressure of 4.0 psig is obtained. Allow at least two (2) minutes for air temperature to stabilize, adding only the amount of air required to maintain pressure.

2. Duration of Test and Allowable Leakage

Decrease pressure to 3.5 psig and start stopwatch. Determine the time in seconds that is required for the internal air pressure to reach 2.5 psig. Minimum permissible pressure holding times are indicated in seconds and shall be computed by the following equation:

$T = (0.085 x D x K)/Q$

T = time for pressure to drop 1.0 pound per square inch gauge in seconds
K = 0.000419xDxL, but not less than 1.0
D = average inside diameter in inches
L = length of line of same pipe size being tested, in feet
Q = rate of loss assume 0.0015 cubic feet per minute per square foot internal surface shall be used

Since K value of less than 1.0 shall not be used, there are minimum times for each pipe diameter as outlined below:

Pipe Diameter	Minimum Time	Length for Minimum Time	Time for Longer Length
(inches)	(seconds)	(feet)	(seconds)
6	340	398	0.855(L)
8	454	298	1.520(L)
10	567	239	2.374(L)
12	680	199	3.419(L)
15	850	159	5.342(L)
18	1020	133	7.693(L)
21	1190	114	10.471(L)
24	1360	100	13.676(L)

Pipe Diameter	Minimum Time	Length for Minimum Time	Time for Longer Length
27	1530	88	17.309(L)
30	1700	80	21.369(L)
33	1870	72	25.856(L)
36	2040	66	30.771(L)

The test may be stopped if no pressure loss has occurred during the first 25% of the calculated testing time. If any pressure loss or leakage has occurred during the first 25% of the testing period, then the test shall continue for the entire test duration as outlined above or until failure. Lines with a 27-inch average inside diameter and larger may be air tested at each joint. If the joint test is used, a visual inspection of the joint shall be performed immediately after testing. The pipe is to be pressurized to 3.5 psi greater than the pressure exerted by groundwater above the pipe. Once the pressure has stabilized, the minimum time allowable for the pressure to drop from 3.5 psi gauge to 2.5 psi gauge shall be 10 seconds.

E. Test Procedures for Hydrostatic Test for Manholes

1. Manholes shall be tested for leakage separately and independently of the wastewater lines by hydrostatic exfiltration testing, or other methods acceptable to the City. If a manhole fails a leakage test, the manhole must be made water tight and retested. The maximum leakage for hydrostatic testing shall be 0.025 gallon per vertical foot per hour. Alternative test methods must ensure compliance with the above allowable leakage. Hydrostatic exfiltration testing shall be performed as follows: all wastewater lines coming into the manhole shall be sealed with an internal pipe plug, then the manhole shall be filled with water and maintained full for at least one (1) hour. For concrete manholes a wetting period of 24-hours may be used prior to testing in order to allow saturation of the concrete.

F. Test Procedures for Vacuum Testing Manholes

1 In lieu of the hydrostatic exfiltration test, manholes may be tested by vacuum. Manholes tested by vacuum shall be performed by the Contractor in compliance with these specifications.

2. Manholes shall be tested after installation of all connections (existing and/or proposed) in place. All lift holes shall be plugged with an approved non-shrink grout and all drop connections and gas sealing connections shall be installed prior to testing. The lines entering the manhole shall be temporarily plugged with the plugs braced to prevent them from being drawn into the manhole. The plugs shall be installed in the lines beyond the drop-connections, gas sealing connections, etc. The test head shall be placed inside the frame at the top of the manhole and inflated in accordance with the manufacturer's recommendations. A vacuum of 10-inches of mercury shall be drawn, and the vacuum pump shall be turned off. With the valve closed, the level of vacuum shall be read after the required test time as shown in the following table. If the drop in the level is less than one (1) inch of mercury (final vacuum of nine (9) inches of mercury), the manhole will have passed the vacuum test. The required test time shall be 120-seconds.

3. Manholes which have a final vacuum of nine (9) inches of mercury after the time indicated will be accepted. Any manhole which fails the vacuum test as described above shall be repaired with an approved non-shrink grout or other material acceptable to the Engineer and the City based on the material from which the manhole is constructed. The manhole shall be retested as described above until a successful test is made.

G. Exfiltration Test

1. Preparation: Seal ends of manhole being tested with watertight plugs. Fill manhole 24-hours prior to start of test. Manholes to be filled to top of manhole cone section.

2. Duration of Test: The test shall be performed for a 24-hour duration.

3. Allowable Leakage: No leakage is allowed. The water elevation shall be the same at beginning and end of test period.

H. Deflection Testing

1. Deflection tests shall be performed on all flexible pipes. For pipes with inside diameters less than 27-inches, a rigid mandrel shall be used to measure deflection. For pipelines with an inside diameter of 27-inches and greater, the Contractor shall submit to the Engineer the proposed method, with which shall provide a precision of ± two tenths of one percent (0.2%) deflection, for review and approval by the Texas Commission on Environmental Quality. The test shall be conducted after final backfill has been in place at least 30 days in the presence of a representative of the City's Utilities Department. No pipe shall exceed a deflection of five percent (5%). If a pipe should fail to pass the deflection test, the problem shall be corrected and a second test shall be conducted after the final backfill has been in place an additional 30 days. Test shall be performed without mechanical pulling devices.

2. Mandrel Sizing: The rigid mandrel shall have an outside diameter (O.D.) equal to 95% of the inside diameter (I.D.) of the pipe. The inside diameter of the pipe, for the purpose of determining the outside diameter of the mandrel, shall be the average outside diameter of the pipe minus two minimum wall thickness for O.D. controlled pipe and the average inside diameter for the I.D. Controlled pipe, all dimensions shall be per appropriate standard. Statistical or other "tolerance packages" shall not be considered in mandrel sizing.

3. Mandrel Design: The rigid mandrel shall be constructed of a metal or rigid plastic material that can withstand 200 psi without being deformed. The mandrel shall have nine or more "runners" or "legs" as long as the total number of legs is an odd number. The barrel section of the mandrel shall have a length of at least 75% of the inside diameter of the pipe. A proving ring shall be provided and used for each size mandrel in use.

4. Method Options: Adjustable or flexible mandrels are prohibited. A television inspection is not a substitute for the deflection test. A deflectometer may be approved provided the Contractor notifies the Engineer in a timely manner and submits adequate information for the Engineer to submit to the Texas Commission on Environmental Quality for review and approval. Mandrels with removable legs or runners may also be approved provided the Contractor notifies the Engineer in a timely manner and submits adequate information for the Engineer to submit to the Texas Commission on Environmental Quality for review and approval.

I. Repairs of Lines: Remove and replace or make approved corrective repairs to any section of line or manhole which has leakage that exceeds above amounts. Repair any individual leaks that may appear whether or not overall section meets leakage requirements. Individual leaks will ordinarily be revealed by looking through sewer with a light while groundwater level is over sewer, during water tamping operations or immediately after water leakage is emptied from sewer.

J. Retest: Sewers and/or manholes failing to meet requirements of leakage test will, after repair by Contractor, be tested again for leakage. No sewer or manhole will be accepted until leakage is less than allowable amount.

K. Video Inspection

1. The use of a television camera for inspection prior to placing the sewer in service will be required. Video inspection is at the cost of the Contractor, and copies of the DVD will be presented to the City prior to final acceptance. One (1) copy of the DVD shall be submitted to the City.

2. Post construction video of the gravity wastewater lines will be evaluated on a case-by-case basis for acceptance. Preparation for video taping of wastewater line shall be as follows:

   a. Flush and clean the gravity wastewater line prior to video taping.

   b. The videotape shall display the station, in accordance with the Plans and Standards, and counter on the screen. Manhole numbers and stations shall correspond to the contract documents.

   c. If debris is evident in the line during the video, the line will be flushed and cleaned to allow a clean video.

   d. All manholes will be identified at the beginning and end of the video corresponding to contract documents with upstream and downstream ends identified.

   e. Additional video inspections shall be performed prior to completion of one-year warranty period and submitted on DVD.

L. Force Main

1. Force Main shall be pressure tested one and one-half (1 1/2) times the maximum output of the pumps. The allowable hydrostaic leakage rate shall be based on CIP 12.06 Table 6A.

CIP12.06 TEST PROCEDURES FOR PRESSURE PIPELINES

A. General

1. After the pipe has been laid and backfilled and the backfill has been otherwise consolidated, all newly laid pipe, or any valved section thereof, shall be subjected to the hydrostatic pressure specified below for that particular type of pipe. The duration of the hydrostatic test shall be at least two (2) hours. Unless otherwise specified or noted on the Plans. All meters, fixtures, devices or appliances which are connected to the pipeline system and which might be damaged if subjected to the specified test pressure shall be disconnected and the ends of the branch lines plugged or capped during the testing procedures.

2. Each valved (capped or plugged) section of pipe shall be filled slowly with water and all air shall be expelled. If permanent air vents are not located at all high points, the Contractor shall install, at his own expense, corporation or blow-off cocks at such points so that air can be expelled as filling takes place. After verification that all air has been expelled, the cocks shall be closed and the pipe kept filled until tested. All exposed pipe, fittings, valves, hydrants and joints shall be examined while under test pressure and all visible leaks shall be stopped. Any cracked or defective pipe, fittings, valves or hydrants discovered during testing shall be removed and replaced by the Contractor. Replacement shall be with sound material and the test shall be repeated until satisfactory to the City.

B. Special Requirements: Where any section of pipeline is provided with concrete reaction blocking, the hydrostatic pressure shall not be made until at least five (5) days have elapsed after installation of the blocking. However, if high-early-strength cement is used in the concrete, two (2) days shall have elapsed prior to testing.

C. Leakage Test: A Leakage Test will be conducted on each valved section over the entire Project. The leakage test shall be at 150 psi for at least four (4) hours. Fire lines shall be tested at 200 psi for two (2)

hours with 0 loss.

D. Allowable Leakage

1. The allowable hydrostatic leakage rate shall be based on the following formula:

Fire lines 0 loss
L= SD √P133,200
L = testing allowance in gallons per hour
S = length of pipe tested in feet
D = nominal diameter of the pipe in inches
P = average test pressure during the hydrostatic test in pounds per square inch (gauge)

Table 6A
Hydrostatic testing allowance per 1,000 ft of pipeline* - *gph*†

Avg. Test Pressure *psi*	Nominal Pipe Diameter – in.																	
	3	4	6	8	10	12	14	16	18	20	24	30	36	42	48	54	60	64
450	.48	.64	.95	1.27	1.59	1.91	2.23	2.55	2.87	3.18	3.82	4.78	5.73	6.69	7.64	8.60	9.56	10.19
400	.45	.60	.90	1.20	1.50	1.80	2.10	2.40	2.70	3.00	3.60	4.50	5.41	6.31	7.21	8.11	9.01	9.61
350	.42	.56	.84	1.12	1.40	1.69	1.97	2.25	2.53	2.81	3.37	4.21	5.06	5.90	6.74	7.58	8.43	8.99
300	.39	.52	.78	1.04	1.30	1.56	1.82	2.08	2.34	2.60	3.12	3.90	4.68	5.46	6.24	7.02	7.80	8.32
275	.37	.50	.75	1.00	1.24	1.49	1.74	1.99	2.24	2.49	2.99	3.73	4.48	5.23	5.98	6.72	7.47	7.97
250	.36	.47	.71	.95	1.19	1.42	1.66	1.90	2.14	2.37	2.85	3.56	4.27	4.99	5.70	6.41	7.12	7.60
225	.34	.45	.68	.90	1.13	1.35	1.58	1.80	2.03	2.25	2.70	3.38	4.05	4.73	5.41	6.03	6.76	7.21
200	.32	.43	.64	.85	1.06	1.28	1.48	1.70	1.91	2.12	2.55	3.19	3.82	4.46	5.09	5.73	6.37	6.80
175	.30	.40	.59	.80	.99	1.19	1.39	1.59	1.79	1.98	2.38	2.98	3.58	4.17	4.77	5.36	5.96	6.36
150	.28	.37	.55	.74	.92	1.10	1.29	1.47	1.66	1.84	2.21	2.76	3.31	3.86	4.41	4.97	5.52	5.88
125	.25	.34	.50	.67	.84	1.01	1.18	1.34	1.51	1.68	2.01	2.52	3.02	3.53	4.03	4.53	5.04	5.37
100	.23	.30	.45	.60	.75	.90	1.05	1.20	1.35	1.50	1.80	2.25	2.70	3.15	3.60	4.05	4.50	4.80

* If the pipeline under test contains sections of various diameters, the testing allowance will be the sum of the testing allowance for each size.
† Calculated on the basis of Eq. 1.

a. These formulas are based on a testing allowance of 11.65 gpd/mi/in. (1.079 L/d/km/mm) of nominal diameter at a pressure of 150 psi (1,034 kPa).

b. 5.2.1.6.1 Testing allowance at various pressures is shown in Tables 6A and 6B.

c. 5.2.1.6.2 When testing against closed metal-seated valves, an additional testing allowance per closed valve of 0.0078 gal/h/in. (1.2 mL/h/mm) of nominal valve size shall be allowed.

d. 5.2.1.6.3 When hydrants are in the test section, the test shall be made against the main valve in the hydrant.

e. 5.2.1.7 Acceptance of installation. Acceptance shall be determined on the basis of testing allowance. If any test of laid pipe discloses a testing allowance grater than that specified in Sec. 5.2.1.6, repairs or replacements shall be accomplished inaccordance with the specifications.

f. 5.2.1.7.1 All visible leaks are to be repaired regardless of the allowance used for

testing.

2. If such testing discloses leakage in excess of this specified allowable, the Contractor, at his expense, shall locate and correct all defects in the pipeline until the leakage is within the specified allowance. All known leaks, irregardless of this test, shall be repaired.

E. Pressure Test: After satisfactorily completing the leakage test, each valved section over the entire project, shall be tested at 200 psi for a sufficient period (approximately 10 min) to discover all leaking or defective materials and/or workmanship.

F. Disinfecting Water Mains: The Contractor shall disinfect all water mains before the new facilities are placed into service. Disinfection must be performed in accordance with AWWA C651, latest revision and water samples must be submitted to a laboratory approved by the Texas Department of Health. Sample must be collected by the Contractor or his representative in the presence of the City or his representative. The Contractor shall be responsible for delivering the samples to an approved laboratory for testing. Sample results must indicate the facility is free of microbiological contamination before it is placed into service. It shall be the Contractor's responsibility to obtain a current copy of AWWA C651 to determine the correct forms of chlorine for disinfection, the basic disinfection procedure, preventive and corrective measures during construction, methods of chlorination, final flushing procedures, procedures for bacteriological tests, procedures for redisinfection and disinfection procedures when cutting into existing mains. The Contractor, at its expense, will supply the concentrated chlorine disinfecting material, the City's personnel will supervise and direct the overall sterilization procedure. The Contractor, at his own expense, shall provide all other equipment, supplies and necessary labor to perform the sterilization under general supervision by the City.

G. General

1. All valves shall be arranged to prevent the strong disinfecting dosage from flowing back into the existing water supply piping. The new pipeline shall then be completely filled with disinfecting solution by feeding the concentrated chlorine and approved water from the existing system uniformly into the new piping in such proportions that every part of the line has a minimum concentration of chlorine as prescribed in AWWA C651.

2. Unless otherwise identified, all quantities called for herein refer to measurements by the testing procedures in the current edition of "Standard Methods of Examination of Water and Wastewater". The chlorine concentration of each step in the sterilization procedure shall be verified by chlorine residual determinations. This disinfecting solution shall be retained in the piping for at least twenty-four (24) hours, and all valves, hydrants, etc., shall be operated to disinfect all their parts. After this retention period, the water shall contain no less than the chlorine residual prescribed in AWWA C651 throughout the treated section of the pipeline.

3. This heavily chlorinated water shall then be carefully flushed from the line until the chlorine concentration is not higher than the residual generally prevailing in the existing distribution system, or approximately 1.0 parts per million. Proper planning and appropriate preparations to handle, dilute and dispose of this strong chlorine solution without causing injury or damage to the public, the water system, the environment must be approved by the City before flushing of the line may begin, and the flushing shall be witnessed by an authorized representative of the City.

H. Bacteriological Testing

1. After final flushing of the strong disinfecting solution, water samples from the line shall be tested for bacteriological quality, at the Contractor's expense, and must be found free of coliform organisms before the pipeline may be placed in service. One (1) test sample shall be drawn from the end of the main and additional samples collected at intervals of not more than one-thousand (1,000) feet along the pipeline. A minimum of three (3) samples must be collected.

2. The Contractor, at his own expense, shall install sufficient sampling taps at proper locations along the pipeline. Each sampling tap shall consist of a standard corporation cock installed in

the line and extended with a copper tubing gooseneck assembly. After samples have been collected, the gooseneck assembly shall be removed and retained for future use.

3. Samples for bacteriological analysis shall be collected only from suitable taps, in sterile bottles. Collection of the test samples shall be made in the presence of City personnel. If the initial disinfection fails to produce acceptable sample tests, the disinfection procedure shall be repeated (without extra compensation) until satisfactory test results have been obtained, before the piping may be placed in service.

CIP12.07 FINAL ACCEPTANCE

A. No pipe installation will be accepted until all known leaks have been repaired whether or not leakage is within allowable limits. Locating and repairing of leaks shall be performed by the Contractor at no additional cost to the City.

B. The City will certify that all required pressure and leakage tests have been successfully completed before the pipeline is accepted.

CIP12.08 PAYMENT

A. No separate payment will be made for work completed in accordance with this specification, and the cost thereof will be included in the appropriate items of the Proposal and Bid Schedule.

END OF SECTION

TECHNICAL SPECIFICATIONS

SECTION CIP13 – SUMMARY OF TESTING (MISCELLANEOUS)

CIP13.01 SCOPE OF WORK

A. This specification covers the requirements to perform testing of various work items for this Project.

CIP13.02 SUBMITTALS

A. Within 30 days after the Notice to Proceed, the Contractor shall submit to the Engineer or the City for approval, technical product literature and all other pertinent data to illustrate conformance to the specification found within.

CIP13.03 TESTING FOR ROADS

Testing for roads shall be in accordance with Table 13-1.

Table 13-1

Item	Test Method	Passing Criteria	Comments
Hot Mix Asphaltic Concrete (HMAC)	Tex-200-F	See SD1.06 A	Sieve Analysis of Fine and Coarse Aggregate
	Tex-207-F	94.5%-97.5%Lab Density; 91.0%-96.0%In-PlaceField Density	Determining Density of Compacted Bituminous Mixtures
	Tex-210-F	See SD 1.06 B	Determining Asphalt Content of Bituminous Mixtures by Extraction
	Tex-227-F		Max. Specific Gravity of Bituminous Mixtures
	Tex-208-F	Max 35	Stability
Trench Backfill	Applicable Tex Testing Method	See Section G4.05	Minimum of one test every 250 linear feet of trench length for each lift.
Embankment	Tex-114-E		Test every 2,000 SY of roadbed surface
Flexible Base	Tex-107-E, Part II Tex-411-A Tex-110-E	2% shrinkage	Bar Linear Shrinkage
			Magnesium Soundness
			Sieve Analysis
	Tex-113-E	100% Density	Moisture Density
	Tex-115-E		Roadway Density
	Tex-116-E	40 Max.	Wet Ball Mill
	Tex-117-E	45 psi @ 0 psi lateral & 175 psi @ 15 psi lateral Max. increase ≤ 20	Triaxial Test (Part I or II)
	Tex-460-A	Plasticity Index ≤ 10	Particle Count (Part I)
	Tex-106-E	Liquid Limit ≤35	Plasticity Index
	Tex-104-E	±2% Optimum	Liquid Limit
	Tex-103-E		Moisture Content

Table 13-1, cont.

Item	Test Method	Passing Criteria	Comments
Striping	Tex-828-B Tex-854-B	10 or more stripes visible (day) 6 or more stripes visible (night) 0.060-inches minimum thickness for edgeline markings 0.090-inches minimum thickness for stop bars, legends, symbols, gore and centerline/no passing barrier line markings 0.180-inches maximum thickness for all markings	Glass Beads: If criteria is not met, check Tex-828-B for scheduling replacement of striping. The average of the readings across each sample must be equal to or above the specified minimum thickness. No reading should be more than 10-mils below the specified minimum thickness.

CIP13.04 TESTING FOR WATER/WASTEWATER

Testing for water/wastewater shall be in accordance with Table 13-2.

Table 13-2

Item	Test Method	Passing Criteria	Comments
Valves, Hydrants and Appurtenances	Manufacturer's Recommendations	Manufacturer's Recommendations	Functional field test of each valve, including actuators and valve control equipment.
Water and Wastewater Lines			As described in Section CIP 12: Testing of Pipelines

CIP13.05 TESTING FOR CONCRETE

Testing for concrete shall be in accordance with Table 13-3.

Table 13-3

Item	Test Method	Passing Criteria	Comments
Asphalt Board	Tex-524-C	Deflection from horizontal <1:3$^{1}/_{,}$	
Concrete Slump			See Table 13-4 for Slump
Coarse Aggregate	Tex-413-A Tex-410-A Tex-411-A	0.25% by weight clay lumps 1.00% by weight shale 5.00% by weight laminated and/or friable particles 40% wear 12% loss Sodium Sulfate 18% loss Magnesium Sulfate	See Table 13-5 for Gradation Soundness Test

Table 13-3, cont.

Fine Aggregate	Tex-612-J Tex-408-A	60% by weight acid insoluble residue subject to direct traffic. Color shall not be darker than Organic Color No. 3 (Gardner No. 11)	 Color Test

	Tex-401-F Tex-203-F Tex-402-A	Not less than 80 Between 2.3 & 3.1 for Non-Class K Between 2.6 & 2.8 for Class K	See Table 13-6 for Gradation Sand Equivalent Fineness Modulus
Membrane Curing	Tex-219-F	2% loss for 24-hour test 4% loss for 72-hour test	Water Retention Test

Table 13-4

Concrete Designation	**Slump**	**Maximum Slump**
1. All drill shaft	6	7
2. Uncased drill shafts, thin walled sections (<9") and pre-stressed concrete members	4	5
3. Slabs, caps, columns, piers, wall sections over 9", etc.	3	4
4. Underwater or seal concrete	6	7
5. Riprap, curb, gutter and other miscellaneous concrete.	As specified by City.	

Table 13-5

Aggregate Grade No.	**Nominal Size (in)**	**Amount Retained (%)**								
		$2^1/_2$ in	**2 in**	**$1^1/_2$ in**	**1 in**	**¾ in**	**½ in**	**$^3/_8$ in**	**No 4**	**No 8**
1	2	0	0-20	15-50		60-80			95-100	
2 (467)*	$1^1/_2$			0-5		30-65		70-90	95-100	
3	$1^1/_2$			0-5		10-40	40-75		95-100	
4 (57)*	1				0-5		40-75		90-100	95-100
5 (67)*	¼					0-10		45-80	90-100	95-100
6 (7)*	½							30-60	85-100	95-100
7	$^3/_8$							5-30	75-100	
8	$^3/_8$							0-5	35-80	90-100

Table 13-6

Aggregate Grade No.	**Amount Retained (%)**							
	$^3/_8$ in	**No 4**	**No 8**	**No 16**	**No 30**	**No 50**	**No 100**	**No 200**
1	0	0-5	0-20	15-50	35-75	65-90	90-100	97-100

CIP13.06 PAYMENT

A. No separate payment will be made for work completed in accordance with this specification, and the cost thereof will be included in the appropriate items of the Proposal and Bid Schedule.

END OF SECTION

TECHNICAL SPECIFICATIONS

SECTION CIP14 – PROJECT CLOSEOUT

CIP14.01 SCOPE OF WORK

A. This specification covers the administrative and procedural requirements for Project closeout, including but not limited to:

1. Closeout procedures.
2. Final cleaning.
3. Adjusting.
4. Project record documents.
5. Spare parts and maintenance materials.

CIP14.02 RECORD DOCUMENTS

A. Maintain on site, one (1) set of the following documents; actual revisions to the Work shall be recorded in these documents:

1. Contract Drawings.
2. Specifications.
3. Addenda.
4. Change Orders and other Modifications to the Contract.
5. Reviewed shop drawings, product data, and samples.

B. Store Record Documents separate from documents used for construction.

C. Record information concurrent with construction progress.

D. Specifications: Legibly mark and record at each Product section description of actual Products installed, including the following:

1. Manufacturer's name and product model and number.
2. Product substitutions or alternates utilized.
3. Changes made by Addenda and Modifications.

E. Contract Drawings and Shop Drawings: Legibly mark each item to record actual construction including:

1. Measured depths of foundations in relation to finish floor datum.
2. Measured horizontal and vertical locations of underground utilities and appurtenances, referenced to permanent surface improvements.
3. Measured locations of internal utilities and appurtenances concealed in construction, referenced to visible and accessible features of the Work.
4. Field changes of dimension and detail.
5. Details not on original Contract Drawings.

F. Submit documents to City with claim for final Application or Payment. Retention monies will not be released until complete record documents have been submitted.

CIP14.03 CLOSEOUT PROCEDURES

A. Submit written certification that Contract Documents have been reviewed, Work has been inspected, and that Work is complete in accordance with Contract Documents and ready for Engineer's and/or City's inspection.

B. Provide submittals to the City that are required by governing or other authorities.

C. Submit final Application for Payment identifying total adjusted Contract Sum, previous payments, and sum remaining due.

CIP14.04 FINAL CLEANING

A. At the completion of work and immediately prior to final inspection, cleaning of the entire project shall be accomplished according to the following provisions:

1. The Contractor shall thoroughly clean, sweep, wash, and polish all work and equipment provided under the Contract, including finishes. The cleaning shall leave the structures and site in a complete and finished condition to the satisfaction of the City.

2. All Subcontractors shall similarly perform, at the same time, an equivalent thorough cleaning of all work and equipment provided under their contracts.

3. The Contractor shall remove all temporary structures and all debris, including all dirt, sand, gravel, rubbish and waste material.

4. Should the Contractor not remove rubbish or debris, or not clean the buildings and site as specified above, the City reserves the right to have the cleaning done at the expense of the Contractor.

B. Use only cleaning materials recommended by manufacturer of surface to be cleaned.

C. Use cleaning materials only on surfaces recommended by cleaning material manufacturers.

D. In preparation for substantial completion or occupancy, conduct final inspection of sight-exposed interior and exterior surfaces, and of concealed spaces.

E. Remove grease, dust, dirt, stains, labels, fingerprints, and other foreign materials from sight-exposed interior and exterior finished surfaces. Polish surfaces so designated to shine finish.

F. Repair, patch, and touch up marred surfaces to specified finish, to match adjacent surfaces.

G. Replace air-handling filters if units were operated during construction.

H. Vacuum clean all interior spaces, including inside cabinets. Broom clean paved surfaces, mow any areas planted with grass which are in excess of two (2) inches high, and rake clean other surfaces of grounds.

I. Handle materials in a controlled manner with as few handlings as possible. Do not drop or throw materials from heights.

J. Schedule cleaning operations so that dust and other contaminants resulting from cleaning process will not fall on wet, newly-painted surfaces.

CIP14.05 ADJUSTING

A. Adjust operating products and equipment to ensure smooth and unhindered operation.

CIP14.06 FINAL INSPECTION

A. After final cleaning and restoration and upon written notice from the Contractor that the work is completed, the Engineer and/or City will make a preliminary inspection, with the Contractor present. Upon completion of this preliminary inspection, the Engineer and/or City will notify the Contractor, in writing, of any particulars in which this inspection reveals that the work is defective or incomplete.

B. Upon receiving written notice from the Engineer and/or City, the Contractor shall immediately undertake the work required to remedy deficiencies and complete the work to the satisfaction of the City.

C. When the Contractor has corrected or completed the items as listed in the Engineer's/ City's written notice, he/she shall inform the City in writing, that the required work has been completed. Upon receipt of this notice, the Engineer and/or City and the Contractor, will make the final inspection of the Project.

D. Should the Engineer and/or City find all work satisfactory at the time of his inspection, the Contractor will be allowed to make application for final payment in accordance with the provisions of the Standard Form of Agreement. Should the Engineer and/or City still find deficiencies in the work, the Engineer and/or City will inform the Contractor of the deficiencies and will deny the Contractor's request for final payment until such time as the Contractor has satisfactorily completed the required work. Additional inspections of deficiencies shall be paid for by the Contractor at $200.00 per inspection.

CIP14.07 ACCESSORY ITEMS

A. The Contractor shall provide to the City, upon acceptance of the equipment, all special accessories required to place each item of equipment in full operation. These special accessory items include, but are not limited to, the specified spare parts, adequate oil and grease as required for the first lubrication of the equipment, initial fill-up of all chemical tanks and fuel tanks, light bulbs, fuses, hydrant wrenches, valve wrenches, valve keys, handwheels, and other expendable items as required for initial start-up and operation of all equipment.

CIP14.08 GUARANTEES, BONDS, AND AFFIDAVITS

A. No application for final payment will be accepted until all guarantees, bonds, certificates, licenses, and affidavits required for work or equipment as specified are satisfactorily filed with the Engineer.

CIP14.09 RELEASE OF LIENS OR CLAIMS

A. No application for final payment will be accepted until satisfactory evidence of release of liens has been submitted to the City as required by the Standard Form of Agreement.

CIP14.10 FINAL PAYMENT

A. Final payment will be made to the Contractor in accordance with Item 47- “Payment Procedures”, Standard Form of Agreement. Final payment and release of retention monies will not be made until the Contractor has submitted one (1) set of as-built plans to the City for the Project.

END OF SECTION

TECHNICAL SPECIFICATIONS

SECTION CIP15 – PROJECT IDENTIFICATION SIGNAGE

CIP15.01 SCOPE OF WORK

A. This specification covers the requirements for furnishing, fabricating and erecting Project Signs on Capital Improvement Projects (C.I.P.) and for project identification at other construction sites, when required on the Plans or by the City.

CIP15.02 MATERIALS

A. Sign Face: The sign face shall be manufactured on standard exterior waterproof plywood sheets or other suitable material approved by the Engineer or the City. Unless indicated otherwise on the Plans, the thickness of the plywood sheet shall be a minimum of $^{3}/_{4}$-inches.

B. Posts: Plastic post, of the size indicated on the Plans, shall be pressure treated with pentachlorophenol.

C. Paint: Exterior oil base paint shall be used and colors shall be as indicated on the Plans.

D. Signs for Capital Improvements Projects: City seals shall be provided by the City.

CIP15.03 INSTALLATION

A. The signs shall be erected at each major entrance to the project for maximum public identification and exposure. At locations where construction is confined to an adequate area defined by the City, the installed sign size shall be four-feet by eight-feet (4'x8'). At locations where roadway construction is in progress, such as a street paving or construction of a sidewalk, the sign shall be two-feet by three-feet (2'x3'). The signs shall be posted on portable wood frames or stanchions and will be located in the proximity of the work area as construction progresses. All lumber shall be painted with two (2) coats of paint as indicated on the Plans.

B. In special cases, the size of the sign may be changed to meet special requirements, but general proportions shall be maintained.

C. It shall be the responsibility of the Contractor to maintain and relocate signs, if necessary, during the progression of the project. Care shall be exercised to assure that placement of the signs does not interfere with or cause sight obstruction to vehicular and pedestrian traffic.

D. The Contractor may install, at his own expense, company signs to identify the Contractor, Developer, etc. Signs are to be securely attached to the posts at locations indicated on the Plans and shall not be larger than 18-inches by 36-inches.

CIP15.04 PAYMENT

A. No separate payment will be made for work performed in accordance with this section of the specifications, and the cost thereof shall be included in the proper items of the Proposal and Bid Schedule.

END OF SECTION

TECHNICAL SPECIFICATIONS

SECTION CIP16 – WARRANTY

CIP16.01 SCOPE OF WORK

A. This specification covers the requirements of the Contractor's or Developer's one (1) year warranty period for all work performed on the Project.

CIP16.01 WARRANTY

A. Upon final acceptance by the City of Georgetown, the Contractor warrants for a period of one (1) year, the construction of the Project according to Plans and Specifications as they may be modified in accordance with the Contract Documents, and further warrants the proper operation of mechanical, electrical, and other devices or other equipment, if any, included in the project for a period of one (1) year. The Contractor or Developer warrants to the City that all materials and equipment furnished under this Contract shall be new unless otherwise approved by the City's Representative and that all work will be of good quality, free from faults and defects, and in conformance to these requirements, including substitutions not properly approved and authorized, may be considered defective.

B. This warranty is in addition to any rights or warranties expressed or implied by law and consumer protection claims arising from misrepresentations by the Contractor or Developer. This warranty obligation shall be covered by any performance or payment bonds tendered in compliance with the Contract Provisions.

C. If within one (1) year after the date of substantial completion of the work or designated portion thereof, or within one (1) year after acceptance by the City of the designated Project, or within such longer period of time as may be prescribed by law or by the terms of any applicable special warranty required by the Contract Documents, any of the work is found or determined to be defective, including obvious defects, or otherwise not in accordance with the Contract Documents, the Contractor or Developer shall correct it promptly.

D. If within 10 days after the City has notified the Contractor or Developer of a defect, failure, or abnormality in the work, the Contractor or Developer has not started to make the necessary repairs or adjustments, the City is hereby authorized to make the repairs or adjustments, or to order the work to be done by a third party. The cost of the work shall be paid by the Contractor or Developer. The cost of all materials, parts labor, transportation, supervision, special tools, and supplies required for the replacement or repair of parts and for correction of defects, shall be paid by the Contractor, Developer or by the surety. This guarantee shall be extended to cover all repairs and replacements furnished under the guarantee, and the period of the guarantee for each repair or replacement shall be one (1) year after the installation or completion. The one (1) year warranty shall cover all work equipment, and materials that are part of this project, whether or not a warranty is specified in the individual section prescribing that particular aspect of the work. Where more than a one (1) year warranty is specified in the individual section, that warranty shall govern.

E. After receipt of written notice from the City to begin corrective work, the Contractor or Developer shall promptly begin the corrective work, unless the City's Representative has previously given the Contractor a written acceptance of such condition. This obligation shall survive the termination of the Contract. This guarantee shall not constitute the exclusive remedy of the City, nor shall other remedies be limited to either the warranty or guarantee period.

CIP16.03 PAYMENT

A. No separate payment will be made for work performed in accordance with this section of the specifications, and the cost thereof shall be included in the proper items of the Proposal and Bid Schedule.

END OF SECTION

TECHNICAL SPECIFICATIONS

SECTION CIP17 – INSPECTION OF PROJECTS

CIP17.01 INSPECTION

A. All Projects, whether by a private development or the City of Georgetown shall be inspected by the City or a designated representative of the City.

B. The time that the City of Georgetown or its designated representative will be available for inspection is from 8:00 AM to Noon and 1:00 PM to 5:00 PM on working days. Working days shall be defined as Monday through Friday excluding all holidays observed by the City of Georgetown. All inspections shall be scheduled with the City a minimum of two (2) working days prior to the inspection.

C. If the Contractor, for his convenience and at his own expense, should desire to carry on his work at night or outside regular hours, he shall submit a written approval request to the City and he shall allow ample time for satisfactory arrangements to be made for inspecting the Work in progress. The Contractor shall pay the expenses for extra inspection required for work outside regular hours at a rate of $50.00/hour. Normal working hours for this purpose are Monday through Friday, 7:00 a.m. to 6:00 p.m. The Contractor shall light the different parts of the Project as required to comply with all applicable Federal and State regulations and with all applicable requirements of the City of Georgetown.

CIP17.02 AUTHORITY AND DUTIES OF INSPECTORS

A. Inspectors will be authorized to inspect all work done and all materials furnished. Such inspection may extend to all or to any part of the Work and to the preparation or Manufacturer of the materials to be used. Such inspection will not relieve the Contractor from any obligation to perform the Work in accordance with the requirements of the Specifications. In case of any dispute arising between the Contractor and the Inspector as to materials furnished or the manner of performing the Work, the Inspector will have authority to reject materials or suspend work until the question at issue can be referred to and decided by the City. The Inspector will not be authorized to revoke, alter, enlarge, or release any requirement of these Specifications, nor to approve or accept any portion of the Work, nor to issue instruction contrary to the Plans and Specifications. He will in no case act as foreman or perform other duties for the Contractor nor interfere with the management of the Work.

END OF SECTION

GENERAL SPECIFICATIONS

SECTION G

TECHNICAL SPECIFICATIONS

SECTION G1 – BARRICADES, SIGNS AND TRAFFIC HANDLING

G1.01 SCOPE OF WORK

A. This specification covers the requirements to provide, install, move, replace, maintain, clean and remove temporary or permanent street closure barricades, signs or other devices required to handle the traffic in conformance with the current edition of the Texas Manual of Uniform Traffic Control Devices for Streets and Highways (TMUTCD)and as indicated by the Engineer or the City.

G1.02 SUBMITTALS

A. Within 10 days after the Notice to Proceed, the Contractor shall submit to the Engineer a site-specific Traffic Control Plan. The Traffic Control Plan shall be sealed by a Professional Engineer Registered in the State of Texas as required by the Project Specifications, City, or Engineer.

G1.03 CONSTRUCTION METHODS

A. Prior to commencing the construction, suitable "Barricades, Signs and Traffic Handling" devices shall be installed to protect the workers and the public. A traffic control plan specific to the Project shall be designed and submitted to the City prior to the start of construction. If indicated by the Plans or requested by the City the plan shall be designed by a qualified traffic engineer who is a Registered Professional Engineer in the State of Texas.

B. The Contractor shall be responsible for installing all markers, signs and barricades conforming to the Texas Manual on Uniform Traffic Control Devices and/or as indicated. If, in the opinion of the Engineer, additional markers, signs or barricades are needed in the interest of safety, the Contractor will install such as are required or as directed by the Engineer.

G1.04 MAINTENANCE

A. It shall be the Contractor's responsibility to maintain, clean, move and replace if necessary, barricades, signs and traffic handling devices during the time required for construction of the Project. When no longer needed all temporary barricades, signs and traffic handling devices shall be removed and the area restored to its original condition or as directed by the Engineer.

G1.05 PAYMENT

A. Payment shall be made for the work performed in accordance with this specification and the appropriate bid items of the Proposal and Bid Schedule.

END OF SECTION

TECHNICAL SPECIFICATIONS

SECTION G2 – SITE PREPARATION

G2.01 SCOPE OF WORK

A. This specification covers the requirements for performing all clearing, grubbing and stripping of topsoil complete as shown on the Plans and as specified herein.

G2.02 SUBMITTALS

A. None required unless specifically called for in the Plans, Standards or requested by the City or the Engineer.

G2.03 CLEARING AND GRUBBING

A. Except as otherwise directed, cut, grub, remove and dispose of all trees, stumps, brush, shrubs, roots and any other objectionable material within the limits defined on the Plans.

B. All trees, stumps, brush, shrubs, roots and other objectionable material shall be cut, grubbed, removed and disposed of from areas to be occupied by buildings, structures, roads, pipelines and any other areas to be stripped. Trees and brush shall be removed to a depth at least three (3) feet below the finished grade.

C. In addition, heavy growths of weeds or other plants shall be stripped from the surface in order to provide clear access to the work site and to prevent their inclusion in stockpiled soil which is to be reused later. Trees, stumps, surface plants and all debris removed from the site shall be disposed of off-site by the Contractor at his own expense.

D. Before the start of construction, protect trees or groups of trees, designated by the Engineer to remain, from damage by all construction operations by erecting suitable barriers, or by other approved means. Clearing operations shall be conducted in a manner to prevent falling trees from damaging trees designated to remain.

E. Areas outside the limits of clearing shall be protected from damage and no equipment or materials shall be stored in these areas.

F. No stumps, trees, limbs, or brush shall be buried in any fills or embankments.

G2.04 STRIPPING

A. Strip topsoil from all areas to be occupied by buildings, structures, roadways and all areas to be excavated or filled. Avoid mixing topsoil with subsoil and stockpile topsoil in areas on the site as approved by the Engineer. Topsoil shall be free from brush, trash, large stones and other extraneous material and protected until it is placed as specified under Section G7- LOAMING, HYDROSEEDING AND PERMANENT EROSION CONTROL. Dispose of any remaining topsoil as directed by the City. All excess topsoil shall remain property of the City at its option, and Contractor shall place extra materials at a site designated by the City.

G2.05 DISPOSAL OF MATERIALS

A. All tree trunks, limbs, roots, stumps, brush, foliage, other vegetation and objectionable material shall be removed from the site and disposed of in a permitted disposal site in a manner satisfactory to the Engineer.

B. Burning of cleared and grubbed materials will not be permitted.

C. Disposal of Excavated Materials

1. Suitable excavated materials may be stockpiled to be used for backfilling. Excess excavated

materials and unsuitable backfill materials shall be disposed of by the Contractor in the following manner:

a. Clays, sands and gravel in excess of project requirements shall be disposed of by the Contractor at such locations and under consideration arranged by the Contractor at his expense.

b. Limestone and other rock excavation shall be disposed of by the Contractor at such locations and under consideration arranged by the Contractor at his expense.

2. The classification of clays, sands, gravel, limestone and rock shall be made in accordance with the Unified Soil Classification System, U.S. Army Corps of Engineers, T.M. 3-357.

3. Desirable topsoil, sod, or area fill shall be carefully removed and piled separately adjacent to the work when required. Excavated materials shall be handled at all times in such a manner as to cause a minimum of inconvenience to the City's operations, and to permit safe and convenient access to private and public property adjacent to the work

G2.06 UNAUTHORIZED EXCAVATION

A. Whenever the excavation is carried beyond or below the lines and grades as shown on the plans, except as specified above, all such excavated space shall be refilled with such material and in such a manner, as may be directed by the City, so as to insure the stability of the affected structure. Beneath all structures, space excavated without authority shall be refilled by the Contractor, at his own expense, with Class "C" concrete, crushed stone or selected fill materials, as directed by the City.

G2.07 PAYMENT

A. Payment will be made for work performed in accordance with this specification by the unit quantity for the item for right-of-way preparation in the Proposal and Bid Schedule.

END OF SECTION

TECHNICAL SPECIFICATIONS

SECTION G3 – SITE CLEARING

G3.01 SCOPE OF WORK

A. This specification covers the requirements for site clearing operations for this Project.

G3.02 SUBMITTALS

A. None required unless specifically called for in the Plans, Standards, or requested by the City or the Engineer.

G3.03 TRAFFIC

A. Conduct site-clearing operations to ensure minimum interference with roads, streets, walks and other adjacent occupied or used facilities. Do not close or obstruct streets, walks, or other occupied or used facilities without permission from authorities having jurisdiction.

G3.04 PROTECTION

A. Provide temporary fences, barricades, coverings, or other protection to preserve existing items indicated to remain and to prevent injury or damage to persons or property. Provide protection for adjacent properties as required.

B. Restore damaged work to condition existing prior to start of work.

C. Protect existing trees and vegetation that are indicated to remain from physical damage. Do not store materials or equipment within tree drip line. Replace damaged trees that cannot be restored to full growth, as determined by arborist, unless otherwise acceptable to the Engineer or the City.

D. Protect existing property and easement corners and pins. In the event that property or easement corners or pins are moved disturbed or destroyed the Contractor shall replace them at his own expense. They shall be replaced by a Registered Professional Land Surveyor registered in the State of Texas.

G3.05 EXISTING SERVICES

A. Locations indicated are approximate; determine exact location before commencing work. Coordinate with local utility service requirements and comply with their instructions.

G3.06 SITE CLEARING

A. Remove trees, shrubs, grass and other vegetation, improvements, or obstructions as indicated or that interfere with new construction. Removal includes digging out stumps and roots, together with subsequent off-site disposal.

B. Strip and stockpile topsoil that will be reused in the Work.

C. Remove existing improvements, both above-grade and below-grade, to extent indicated or as otherwise required to permit new construction.

G3.07 SALVAGEABLE ITEMS

A. Carefully remove items indicated to be salvaged and store on the City's premises where indicated or directed.

G3.08 AIR POLLUTION

A. Control air pollution caused by dust and dirt; comply with governing regulations.

G3.09 REGRADING

A. Fill depressions and voids resulting from site-clearing operations. Using satisfactory soil materials, place in maximum six (6) inch deep horizontal layers and compact each layer to density of surrounding original ground.

B. Grade ground surface to conform to required contours and to provide surface drainage.

G3.10 DISPOSAL OF MATERIAL

A. Dispose of waste materials including trash, debris and excess topsoil. No waste material shall remain on the City's property.

B. Burning waste materials on site is not permitted.

G3.11 PAYMENT

A. No separate payment will be made for work performed in accordance with this specification, and the cost thereof shall be included in the proper items of the Proposal and Bid Schedule.

END OF SECTION

SECTION G4 - PIPE EXCAVATION, TRENCHING, EMBEDMENT, ENCASEMENT AND BACKFILLING

G4.01 SCOPE OF WORK

A. This specification covers the requirements for furnishing all labor, equipment and material and performing all work necessary, in connection with excavation, trenching, embedment, encasement, and backfilling, for the installation of water lines, storm sewer lines, wastewater lines, etc. in this Project.

G4.02 SUBMITTALS

A. Within 30 days after the Notice to Proceed, the Contractor shall submit to the Engineer or the City for approval, technical product literature including a Trench Safety Plan (which shall be sealed by a Professional Engineer registered in the State of Texas, if required) embedment material (source, gradation and type), backfill material (source, gradation and type), encasement material (if required), equipment and all other pertinent data to illustrate conformance to the specification found within.

G4.03 EXCAVATION

A. General

1. Excavation shall include the removal of any trees, stumps, brush, debris, or other obstacles that may obstruct the line of work, and the excavation and removal of all earth, rock or other materials to the extent necessary to install the pipe and appurtenances in conformance with the line and grades shown in the Plans, or as specified.

B. Maximum and Minimum Width of Trenches

1. The sides of all trenches shall be cut as nearly vertical as possible. Unless otherwise specified on the Plans, the minimum width of trench in which the pipe may be installed shall not be less than 12-inches plus the outside diameter of the pipe, and the maximum width shall not be more than 24-inches plus the outside diameter of the pipe, measured at an elevation in the trench which is 12-inches above the top of the pipe when it is laid to grade.

2. Wherever the prescribed maximum trench width is exceeded, the Contractor shall use the class embedment or encasement required by the Engineer to provide the load carrying capacity for the trench width as actually cut, and the additional cost incurred will be borne by the Contractor.

C. Sheeting and Shoring

1. Where required in the Contractor's Trench Safety System, or where required for other reasons in caving ground, or in wet, saturated or flowing materials, the sides of all trenches and excavations shall be adequately sheeted and braced so as to maintain the excavation free from slides or cave-ins.

2. Sheeting and shoring shall not be left in place unless its removal is impractical.

D. Dewatering Excavations

1. There shall be sufficient pumping equipment, in good working order, available at all times to remove any water that accumulates in excavations. Where the pipeline crosses natural drainage channels, the work shall be conducted in such a manner that unnecessary damage or delays in the prosecution of the work will be prevented. Provisions shall be made for the

satisfactory disposal of surface water pumped so as to prevent damage to public or private property. The Contractor shall be responsible for maintaining safe working conditions and suitable construction techniques.

E. Disposal of Excavated Materials

1. Suitable excavated materials may be piled adjacent to the work to be used for backfilling. Excavated materials unsuitable for backfilling, or in excess of that required for backfilling, shall be disposed of by the Contractor. Desirable topsoil, sod, etc. shall be carefully removed and piled separately adjacent to the work when required. Excavated materials shall be handled at all times in such a manner as to cause a minimum of inconvenience to public travel. Suitable selected bedding or backfill material shall be provided at no additional cost to the City.

F. Trench Depth

1. Excavation for the pipeline shall be removed to a depth below the pipe barrel and pipe bell as shown in the Plans for the type of embedment specified, and the bottom of the trench brought to true subgrade with the embedment or encasement shown in the Plans.

G. Soft Subgrade

1. Where soft or spongy material is encountered in the excavation at subgrade level, it shall be removed to such a depth that a stable foundation is achieved by replacing the unsuitable material with tamped gravel, brought to the level of the bottom of bedding.

2. Gravel used shall be washed gravel or crushed stone and may fit any gradation of size up to three (3) inches. The particular gradation shall take into consideration the actual field conditions.

H. Excavated Materials

1. Excavated materials shall be piled adjacent to the work to be used for backfilling as required. After the trench has been refilled, topsoil shall be replaced to the extent that rock excavated from the trench will be completely covered and the area is returned to its original condition.

2. Where required on the Plans or when otherwise specified, desirable topsoil shall be piled separately in a careful manner and replaced in its original position.

3. Where a trench is required to cross a paved area, the asphalt or concrete shall be saw cut and removed for a total width that is two (2) feet greater than the trench width. The Contractor shall dispose of all excavated concrete, asphalt and subgrade material that is unsuitable for backfilling or in excess of that required for backfilling.

I. Damage to Existing Utilities

1. Where existing utilities are damaged, they shall be replaced immediately with material equal to or better than the existing material. Such work shall be at the entire expense of the Contractor.

G4.04 EMBEDMENT AND ENCASEMENT

A. General

1. Embedment shall be as required in the Plans or Standards. All embedment materials shall be free of grass, roots, vegetation, and other deleterious materials. Embedment Standards are shown on the Plans or Standards.

2. When the pipe has been checked for line and grade, the trench shall be backfilled with enough granular material or concrete on both sides to hold the pipe firmly in position. When placing granular material or concrete around the pipe, care shall be taken to fill all voids around the pipe. The pipe shall not be floated. The embedment or encasement material shall be carefully tamped to assure uniform pipe support and density.

B. Embedment Materials

1. Material for embedment shall conform to the following sieve analysis:

Sieve Size	$^{3}/_{8}$" F % Retained	½" D % Retained
½"	0	0
$^{3}/_{8}$"	0-2	5-25
4m	40-85	80-100
10m	95-100	96-100

C. Concrete Embedment and Encasement

1. Concrete embedment and encasement and cap shall have a minimum compressive strength of 2,000 pounds per square inch at 28 days.

2. Dry mix will not be permitted. The concrete cushion portion of the embedment or encasement will be mixed moist or damp to give a slump of not more than one (1) inch. Concrete for the sides and top, if specified, shall be mixed to obtain a slump of not less than one (1) inch or more than three (3) inches.

3. After pipe joints are completed, the voids at the joints in the embedment section shall be filled with concrete, and the embedment shall be brought up to proper grade. Where concrete is placed over or along the pipe, it shall be placed in such a manner as not to damage or injure the joints or displace the pipe. Care shall be taken in the placement of concrete to assure that a uniform pad, free of voids and of specified thickness, is constructed under the entire pipe section.

4. A cleavage line between the base concrete and the side embedment concrete will not be allowed. Backfilling shall be done in a careful manner and at such time, after concrete embedment or encasement has been placed, as not to damage the concrete in any way.

G4.05 BACKFILLING

A. General

1. Backfilling shall include the refilling and consolidating of the fill in trenches and excavations up to the surrounding ground surface or road grade at crossings. No backfill shall be placed until the Engineer, the City or his authorized Inspector has inspected the trench and pipe in place and has authorized the placing of backfill.

2. Backfilling shall be done with select material or concrete backfill as described hereafter and shown on the Plans. No material of a perishable, spongy or otherwise unsuitable nature shall be used in backfilling.

B. Select Backfill Material

1. Unless otherwise shown on the Plans, or approved by the Engineer, the select material backfill shall be Specification Section SD4 Flexible Base, Type A Grade 1.

2. If approved by the Engineer, good, sound earth may be used as select material for backfill over the pipe. Good, sound earth as defined as gravel, sandy loam or loam, free from excessive clay. Select material shall not have rocks with an average dimension larger than one (1) inch, and no dimension greater than two (2) inches.

3. An alternative to the flexible base as select backfill will be on-site or imported select material so long as it is properly moisture-conditioned, placed and compacted.

4. It shall be the full responsibility of the Contractor to explore the project and subsurface materials to determine if the trench excavation will be suitable for use as select materials and to follow as closely as possible this Specification to insure a good, sound pipeline when completed.

C. Concrete Trench Cap

1. Where 36-inch minimum cover cannot be obtained or due to potential surface loading, the City may require a cap to be installed.

D. Concrete Backfill

1. Where shown on the Plans, concrete backfill shall consist of selected rock material or granular sand material mixed with a minimum of three sacks of cement per cubic yard. All material shall be mixed in a concrete mixer or transit mixed unless otherwise approved by the City.

E. Backfilling Operation

1. Backfilling operation outside of pavement shall be compacted to the required density without damaging the pipe or bedding. Backfill under non paved areas, two feet outside of any structure or utilities and excluding lines within a floodplain, streams and watercourses shall be compacted to 90% of the maximum dry density in accordance Tex-114-E. Areas within two feet of structures or existing utilities and areas within a floodplain, streams and water courses shall be compacted to 95% in accordance with Tex-114-E. Prior to any compaction, moisture shall be within ±3% of the optimum moisture content.

2. All trenches under proposed or existing concrete roadways, driveways and sidewalks, paved waterways, brick roadways, asphaltic roadways with concrete base, gravel roadways, and roadways with gravel base and asphalt surface, shall be backfilled to the required density in six (6) inch maximum lifts without damaging the pipe or bedding except the first lift over the pipe bedding will be twelve (12) inches in depth. Swelling soils (soils with a plasticity index of 20 or more) shall be sprinkled as required to provide not less than optimum moisture nor more than 3% over the optimum moisture content to the extent necessary to provide not less than 95% nor more than 102% of the maximum dry density as determined in accordance with Tex-114-E. Non-swelling soils (soils with a plasticity index less than 20) shall be sprinkled as required and compacted to the extent necessary to provide not less than 95% of the optimum dry density with the moisture within ±3% of the optimum moisture content in accordance with Tex-114-E. Jetting with water will not be permitted. Flexible base used as select backfill shall be compacted to 95% of Tex-113E at ±3% of the optimum moisture content.

3. After the trench has been refilled, topsoil shall be replaced to the extent that rock excavated from the trench will be completely covered or removed and the area is returned to its original condition, except that in cultivated areas a minimum of six (6) inches of topsoil shall be replaced.

G4.06 PAYMENT

A. No separate payment will be made for work performed under this Specification for excavating, trenching, embedment, and backfilling. All costs incurred shall be included in the contract price for the appropriate items in the Proposal and Bid Schedule.

B. No separate payment will be made for the bedding used in embedment. All costs incurred shall be included in the contract price for the appropriate bid item.

C. Separate payment, if authorized by the City, will be made for crushed stone or washed gravel as described in these specifications under Section G4.02(G), SOFT SUBGRADE, at the contract unit price per cubic yard as provided in the Proposal and Bid Schedule under "Extra Gravel for Embedment."

D. Separate payment will be made for 2,000 psi Concrete Encasement or Backfill at the contract unit price per cubic yard or linear foot as provided in the Proposal and Bid Schedule under 2,000 psi Concrete Encasement. Concrete and three (3) sack granular sand or rock material mix backfill will be measured in cubic yards or linear feet actually placed based on actual trench width not to exceed the specified maximum trench width and will be paid for at the contract price per cubic yard or linear foot as provided in the Proposal and Bid Schedule.

E. Where authorized by the Engineer, gravel used to replace unsuitable material will be paid for at the unit bid price for Extra Gravel for embedment.

END OF SECTION

SECTION G5 – GRANULAR FILL MATERIALS

G5.01 SCOPE OF WORK

A. This specification covers the requirements for the use of granular fill materials for this Project.

G5.02 SUBMITTALS

A. Within 30 days after the Notice to Proceed, the Contractor shall submit to Engineer or the City for approval, technical product literature including the source of the material, gradation, type of material, and all other pertinent data to illustrate conformance to the specification found within.

G5.03 GENERAL

A. Granular fill materials are specified in this Section, but their use for bedding pipe, pavement base, are specified in detail in sections G4 TRENCHING, BACKFILLING AND COMPACTION and SD4 FLEXIBLE BASE. The Engineer may respectively order the use of fill materials for purposes other than those specified in other Sections if, in his/her opinion, such use is advisable.

G5.04 MATERIALS

A. Common fill shall consist of mineral soil, substantially free of clay, organic material, loam, wood, trash, and other objectionable material which may be compressible, or which cannot be compacted properly. Common fill shall not contain stones larger than six (6) inches in any dimension, broken concrete, masonry, rubble, asphalt pavement, or other similar materials. It shall have physical properties, as approved by the Engineer, such that it can be readily spread and compacted.

B. Select common fill shall be as specified above for common fill except that the material shall contain no stones larger than two (2) inches in its largest dimension.

C. Crushed Stone Backfill shall consist of hard, durable, particles of proper size and gradation, free from sand, loam, clay, excess fines and deleterious materials. The size of the particles shall be uniformly graded such that the following bedding specifications are met:

Sieve Size	$^{3}/_{8}$" F % Retained	½" D % Retained	Washed Gravel % Retained
½"	0	0	0
$^{3}/_{8}$"	0-2	5-25	---
4m	40-85	80-100	---
10m	95-100	96-100	---
¾"	---	---	100

D. Crushed Stone Base shall consist of sound, durable stone, free of any foreign material, angular in shape, free from structural defects and comparatively free of chemical decay. This material shall comply with Texas Department of Transportation Item 248, Type "A", Grade 1 unless otherwise shown on the Plans or Standards. The stone shall have a maximum size of $^{7}/_{8}$-inch.

E. Cement Stabilization Sand Backfill shall consist of a mixture of ASTM C33 fine aggregate and Type I cement. The mix shall be proportioned of two (2) sacks of cement per cubic yard.

G5.05 PAYMENT

A. No separate payment will be made for work performed in accordance with this specification, and the cost thereof shall be included in the proper items of the Proposal and Bid Schedule.

END OF SECTION

TECHNICAL SPECIFICATIONS

SECTION G6 – SEDIMENTATION AND TEMPORARY EROSION CONTROL

G6.01 SCOPE OF WORK

A. This specification covers the requirements necessary to perform all installation, maintenance, removal and area cleanup related to sedimentation control work as shown on the Plans and as specified herein.

G6.02 SUBMITTALS

A. Within 10 days after Notice to Proceed, the Contractor shall submit to the Engineer for approval, technical product literature for all commercial products to be used for sedimentation and erosion control.

G6.03 GENERAL

A. The work shall include, but not necessarily be limited to: triangular filter dike, rock berm, silt fence, curb inlet protection, stabilized construction entrance, tree protection, excelsior matting, and temporary mulching, sediment removal and disposal, device maintenance, removal of temporary devices, temporary mulching, excelsior matting installation and final cleanup. All sedimentation and erosion control shall be installed prior to the start of any construction activities.

G6.04 QUALITY ASSURANCE

A. The Contractor shall be responsible for the timely installation and maintenance of all sedimentation control devices necessary to prevent the movement of sediment from the construction site to off site areas or into the stream system via surface runoff or underground drainage systems. Measures in addition to those shown on the Plans necessary to prevent the movement of sediment off site shall be installed, maintained, removed, and cleaned up at the expense of the Contractor. No additional charges to the City will be considered.

B. Sedimentation and erosion control measures shall conform to the requirements outlined in the Texas Natural Resources Conservation Commission, Chapter 213.

G6.05 MATERIALS

A. Triangular Filter Dike

1. Triangular filter dike sections shall be either 10-feet or 20-feet in length.

2. Geotextile fabric shall extend to 12-inches upstream of triangular filter dike structure.

3. Triangular filter dike structure shall be 18-inches in length on all three (3) faces.

4. Three (3) inch to five (5) inch open graded rock shall be placed over skirt to anchor it on the upstream side.

5. Structure shall be formed by six (6) gauge six inch by six inch (6”x6”) welded wire mesh.

6. Geotextile fabric shall be non-woven, 4.5 oz. minimum and 36-inches wide.

B. Rock Berm

1. Woven wire sheathing shall be 20-gauge with one (1) inch openings.

2. Rock shall be three inches to five inches (3”-5”) open graded.

C. Silt Fence

1. Steel posts shall be a minimum of four (4) feet in length, heavy weight T-Post.

2. Welded wire fabric shall be two-inch by four-inch (2”x4”) mesh of 12-gauge by 12-gauge galvanized wire mesh.

3. Silt fence fabric shall be a 4.5 oz minimum non-woven geotextile filter fabric 36-inches wide.

4. Tie wires for securing silt fence fabric to wire mesh shall be light gauge metal clips (hog rings), or $^{1}/_{32}$-inch diameter soft aluminum wire.

5. Prefabricated commercial silt fence may be substituted for built-in-field fence. Prefabricated silt fence shall be "Envirofence" as manufactured by Mirafi Inc., Charlotte, NC or equal.

D. Curb Inlet Protection

1. 4.5 oz. minimum non-woven geotextile filter fabric shall be used.

2. Sand bags shall be used to hold the filter fabric in place.

E. Stabilized Construction Entrance

1. Stabilized construction entrance shall have a minimum width of 12-feet and a minimum length of 50-feet.

2. An eight (8) inch high diversion ridge shall be constructed 15-feet from the edge of the existing roadway.

3. Stabilized construction entrance shall be graded to drain towards the existing roadway at a two-percent (2%) slope.

4. Rock shall be four-inches to eight-inches (4”-8”) coarse aggregate.

5. Rock shall be placed to a depth of at least eight (8) inches.

F. Tree Protection – Chain Link Fence

1. Chain link fence shall be five (5) feet in height.

2. Fence shall be installed around the driplines of the trees to be protected.

G. Tree Protection – Wood Slats

1. Where any exceptions result in a fence being closer than four (4) feet to a tree trunk, protect the trunk with strapped-on-planking two inches by four inches (2”x4”) wood slats to a height of eight (8) feet, or to the limits of lower branching in addition to the reduced fencing provided.

2. Trees most heavily impacted by construction activities should be watered deeply once a week during periods of hot, dry weather. Tree crowns should be sprayed with water periodically to reduce dust accumulation on the leaves.

3. Any trenching required for the installation of landscape irrigation shall be placed as far from existing tree trunks as possible.

4. No landscape topsoil dressing greater than four (4) inches shall be permitted within the dripline of a tree. No soil is permitted on the root flare of any tree.

5. No vehicles or equipment shall be allowed to park within the dripline of an existing tree.

H. Soil Retention Blankets

1. Soil retention blankets shall be installed in all seeded drainage swales and ditches as shown on the Plans or as directed by the Engineer. Only soil retention blankets included on TxDOT's Approved Products List will be considered acceptable for use on this Project.

I. Temporary Mulch

1. Temporary mulch shall be applied to areas where rough grading has been completed but final grading is not anticipated to begin within 30 days of the completion of rough grading.

G6.06 INSTALLATION

A. Triangular Filter Dike

1. Layout the filter dike following as closely as possible to the contour.

2. Clear the ground of debris, rocks, and plants that will interfere with installation.

3. Place the filter dike sections one (1) at a time, with the skirt on the uphill side towards the direction of flow anchoring each section to the ground before the next section is placed.

4. Anchors should be placed on two (2) foot centers alternating from front to back so that there is actually only one (1) foot in between anchors.

5. Securely fasten the skirt from one (1) section of filter dike to the next.

6. Filter dikes must maintain continuous contact with the ground.

7. After the site is completely stabilized, the dikes and any remaining silt should be removed. Silt should be disposed of in a manner that will not contribute to additional siltation.

B. Rock Berm Installation

1. Layout the rock berm following as closely as possible to the contour.

2. Clear the ground of debris, rocks or plants that will interfere with installation.

3. Place woven wire fabric on the ground along the proposed installation with enough overlap to completely encircle the finished size of the berm.

4. Place the rock along the center of the wire to the designated height.

5. Wrap the structure with the previously placed wire mesh secure enough so that when walked across, the structure retains its shape.

6. Secure with tie wire.

7. The ends of the berm should be tied into existing upslope grade and the berm should be buried in a trench approximately four (4) inches deep to prevent failure of the control.

8. The rock berm should be left in place until all upstream areas are stabilized and accumulated silt removed.

C. Silt Fence Installation

1. Layout the silt fence following as closely as possible to the contour.

2. Clear the ground of debris, rocks, and plants (including grasses taller than two (2) inches) to provide a smooth flow approach surface. Excavate four-inches deep by four-inches wide (4"x4") trench on upstream side of face per Plans.

3. Drive the heavy duty T-post at least 12-inches into the ground and at a slight angle towards the flow.

4. Attach the two-inches by four-inches (2”x4”) 12-gauge welded wire mesh to the T-post with $11^1/_2$-gauge galvanized T-post clips. The top of the wire to be 24-inches above ground level. The welded wire mesh to be overlapped six (6) inches and tied at least six (6) times with hog rings.

5. The silt fence to be installed with a skirt a minimum of 11-inches wide placed on the uphill side of the fence inside excavated trench. The fabric to overlap the top of the wire by one (1) inch.

6. Anchor the silt fence by backfilling with excavated dirt and rocks.

7. Geotextile splices should be a minimum of 18-inches wide attached in at least six (6) places.

D. Curb Inlet Protection Installation

1. Clear the pavement of debris, rocks, etc. to provide a smooth surface for installation.

2. Place the filter fabric over the inlet and extend to five (5) feet beyond inlet opening, upstream of inlet. Terminate fabric in street gutter with sand bags placed in gutter flowline.

3. Place sandbags on top of filter fabric around the perimeter of the protected area to secure the filter fabric.

4. Care shall be taken insure that the inlet protection will remain in place during periods of heavy runoff and that severe ponding will not occur in the street.

E. Stabilized Construction Entrance Installation

1. Clear the area of debris, rocks or plants that will interfere with installation.

2. Grade the area for the entrance to flow back on to the construction site. Runoff from the stabilized construction entrance onto a public street will not be allowed except for the first 15 feet connecting to the public street.

3. Place geotextile fabric if required.

4. Place rock as required.

F. Tree Protection – Chain Link Fence

1. Tree protection fences shall be installed prior to the commencement of any site preparation work (clearing, grubbing or grading).

2. Fences shall completely surround the tree, or clusters of trees; will be located at the outermost limit of the tree branches (dripline), and will be maintained throughout the construction project in order to prevent the following:

   a. Soil compaction in the root zone area resulting from vehicular traffic, or storage of equipment or materials.

   b. Root zone disturbances due to grade changes greater than six (6) inches cut or fill or trenching not reviewed and authorized by the City.

   c. Wounds to exposed roots, trunks or limbs by mechanical equipment.

   d. Other activities detrimental to trees, such as chemical storage, cement truck cleaning and fire.

3. Exceptions to installing fences at tree driplines may be permitted in the following cases:

a. Where permeable paving is to be installed, erect the fence at the outer limits of the permeable paving area.

b. Where trees are close to a proposed building, erect the fence no closer than six (6) feet to building.

G. Tree Protection – Wood Slats

1. Any roots exposed by construction activity shall be pruned flush with the soil. Backfill root areas with good quality top soil as soon as possible. If exposed root areas are not backfilled within two (2) days, cover them with organic material in a manner which reduces soil temperature, and minimizes water loss due to evaporation.

2. Prior to excavation or grade cutting within tree dripline, make a clean cut between the disturbed and undisturbed root zones with a rock saw or similar equipment, to minimize damage to remaining roots.

3. Pruning to provide clearance for structures, vehicular traffic and equipment shall take place before construction starts.

H. Excelsior Matting

1. The area to be covered shall be properly prepared, fertilized and seeded with permanent vegetation before the blanket is applied.

2. When the blanket is unrolled, the netting shall be on top and the fibers in contact with the soil over the entire area.

3. The blankets shall be applied in the direction of water flow, and stapled. Blankets shall be placed a minimum of three (3) rows, of four (4) foot wide (total approx. 12-foot width) within the drainage swale/ditch and stapled together in accordance with Manufacturer's instructions.

4. Side overlaps shall be four (4) inch minimum. The staples shall be made of wire, 0.091-inch in diameter or greater, "U" shaped with legs 10-inches in length and a $1^1/_2$-inch crown. The staples shall be driven vertically into the ground, spaced approximately two (2) linear feet apart, on each side, and one (1) row in the center alternately spaced between each size.

5. Upper and lower ends of the matting shall be buried to a depth of four (4) inches in a trench.

6. Erosion stops shall be created every 25-feet by making a fold in the fabric and carrying the fold into a silt trench across the full width of the blanket. The bottom of the fold shall be four (4) inches below the ground surface. Staple on both sides of fold.

7. Where the matting must be cut or more than one (1) roll length is required in the swale, turn down upper end of downstream roll into a slit trench to a depth of four (4) inches. Overlap lower end of upstream roll four (4) inches past edge of downstream roll and staple.

8. To ensure full contact with soil surface, roll matting with a roller weighing 100-pounds per foot of width perpendicular to flow direction after seeding, placing matting and stapling.

9. Thoroughly inspect channel after completion. Correct any areas where matting does not present a smooth surface in full contact with the soil below.

I. Temporary Mulching

1. Straw mulch shall be applied at rate of 100 lbs/1,000 ft^2 and tackified with latex acrylic copolymer at a rate of 1 gal/1,000 ft^2 diluted in a ratio of 30 parts water to one (1) part latex acrylic copolymer mix.

G6.07 MAINTENANCE AND INSPECTIONS

A. Inspections

1. Contractor shall make a visual inspection of all sedimentation control devices once per week and promptly after every rain event exceeding ¼-inch. If such inspection reveals that additional measures are needed to prevent movement of sediment to offsite areas or into the vent trench, Contractor shall promptly install additional devices as needed. Sediment controls in need of maintenance shall be repaired promptly.

B. Device Maintenance

1. Triangular Filter Dikes

a. Realign berms as needed to prevent gaps between the sections.

b. Accumulated silt should be removed after each rainfall event, and disposed of in a manner which shall not cause additional siltation.

2. Rock Berm

a. Remove sediment and other debris when buildup reaches six (6) inches and dispose of the accumulated silt in an approved manner.

b. Repair any loose wire sheathing.

c. Reshape as needed.

d. Replace berm when the structure ceases to function as intended due to silt accumulation among the rocks, washout, construction traffic damage, etc.

3. Silt Fences

a. Remove accumulated sediment when buildup reaches six (6) inches.

b. Replace damaged fabric, or patch with a two (2) foot minimum overlap.

c. Replace or repair any sections crushed or collapsed in the course of construction activity.

d. Make other repairs as necessary to ensure that the fence is filtering all runoff directed to the fence.

4. Curb Inlet Protection

a. Repair any damaged fabric, or patch with a two (2) foot minimum overlap.

b. Replace any damaged sandbags.

c. Remove accumulated sediment.

5. Stabilized Construction Entrance

a. Periodic top dressing with additional stone may be required as conditions demand to prevent tracking or flowing of sediment onto public rights-of-way.

c. Cleanout any measures used to trap sediment as needed.

d. All sediment spilled, dropped, washed or tracked on to public rights-of-way should be removed immediately by the Contractor.

e. When necessary, wheels should be cleaned to remove sediment prior to entrance onto public rights-of-way.

f. When washing is required, it should be done on an area stabilized with crushed stone that drains into an approved sediment trap or sediment basin.

g. All sediment should be prevented from entering any storm drain, ditch or water course by using approved methods.

6. Tree Protection – Chain Link Fence

a. Repair or replace any chain link fence damaged by construction activities.

7. Tree Protection – Wood Slats

a. Repair or replace any wood slats damaged by construction activities.

8. Excelsior Matting

a. Replace matting as needed to prevent erosion from occurring.

9. Temporary Mulch

a. Replace mulch as needed to prevent erosion from occurring.

G6.08 REMOVAL AND FINAL CLEANUP

A. Once the site has been fully stabilized against erosion, remove sediment control devices and all accumulated silt. Dispose of silt and waste materials in proper manner. Re-grade all areas disturbed during this process and stabilize against erosion with surfacing materials as indicated on the Plans.

G6.09 PAYMENT

A. Silt fence and rock berm will be paid per linear foot installed as listed in the Proposal and Bid Schedule.

B. Stabilized Construction Entrance will be paid per each installed as listed in the Proposal and Bid Schedule.

C. Tree protection will be paid per each installed as listed in the Proposal and Bid Schedule.

D. Erosion Control Blankets will be paid per square yard as listed in the Proposal and Bid Schedule.

E. Triangular Filter Dikes will be paid per linear foot as listed in the Proposal and Bid Schedule.

F. No separate payment will be made for all other work performed in accordance with this specification, and the cost thereof shall be included in the proper items of the Proposal and Bid Schedule.

END OF SECTION

TECHNICAL SPECIFICATIONS

SECTION G7 – LOAMING, HYDROSEEDING AND PERMANENT EROSION CONTROL

G7.01 SCOPE OF WORK

A. This specification covers the requirements to provide erosion control and place topsoil, finish grade, apply fertilizer, hydraulically apply seed and mulch and maintain all seeded areas as shown on the Plans and as specified herein, including all areas disturbed by the Contractor.

G7.02 SUBMITTALS

A. Within 30 days after the Notice to Proceed, the Contractor shall submit to the Engineer or the City for approval, samples of all materials to be used and all other pertinent data to illustrate conformance to the specification found within.

G7.03 TOPSOIL

A. Topsoil shall be fertile, friable, natural topsoil typical of topsoil of the locality and shall be obtained from a well drained site that is free of flooding. It shall be without admixture of subsoil or slag and free of stones, lumps, plants or their roots, sticks, clay, peat and other extraneous matter and shall not be delivered to the site or used while in a frozen or muddy condition. Topsoil as delivered to the site or stockpiled shall have pH between 6.0 and 7.0 and shall contain not less than three (3) percent organic matter as determined by loss of ignition of moisture-free samples dried at 100 degrees Celsius. The topsoil shall meet the following mechanical analysis:

	Percentage Passing
1-inch screen opening	100
No. 10 mesh	95 - 100
No. 270 mesh	35 - 75
0.002 mm*	5 - 25

* Clay size fraction determined by pipette or hydrometer analysis.

B. At least 10 days prior to anticipated start of topsoiling operations, a one (1) pint sample of topsoil material shall be delivered by the Contractor to a laboratory for testing and approval. All testing shall be at the sole expense of the Contractor. Based on tests performed by the laboratory, the topsoil shall be identified as acceptable, acceptable with certain fertilizer and limestone applications or unacceptable. If the topsoil is found acceptable the fertilizer and lime requirements will be as specified or as recommended by the laboratory. If the topsoil is found unacceptable, the Contractor shall be responsible for identifying another source of topsoil and shall incur all expenses associated with testing additional samples. All topsoil incorporated into the site work shall match the sample provided to the laboratory for testing. Topsoil stockpiled under other Sections of these Specifications may be used subject to the testing and approval outlined above. Contractor will be responsible for screening stockpiled topsoil and providing additional topsoil as required at his/her own expense.

C. Lime shall be ground limestone containing not less than 85-percent calcium and magnesium carbonates and be ground to such fineness that at least 50-percent shall pass a 100-mesh sieve and at least 90-percent shall pass a 20-mesh sieve.

D. All planting shall be done between May 1 and September 15 except as specifically authorized in writing. If planting is authorized to be done outside the dates specified, the seed shall be planted with the addition of winter fescue (Kentucky 31) at a rate of 100 lbs. per acre.

E. The seed shall be furnished and delivered premixed in the proportions specified within. A Manufacturer's Certificate of Compliance to the specified mixes shall be submitted by the Manufacturers for each seed type. These certificates shall include the guaranteed percentages of purity, weed content and germination of the seed and also the net weight and date of shipment. No seed may be sown until the Contractor has submitted the certificates.

F. Seed shall be delivered in sealed containers bearing the dealer's guaranteed analysis.

G. Mulch shall be a specially processed cellulose fiber containing no growth or germination-inhibiting factors. It shall be manufactured in such a manner that after addition and agitation in slurry tanks with water, the fibers in the material become uniformly suspended to form a homogeneous slurry. When sprayed on the ground, the material shall allow absorption and percolation of moisture. Each package of the cellulose fiber shall be marked by the manufacturer to show the air-dry weight content and not contain in excess of 10-percent moisture.

H. Excelsior matting blanket installed in all drainage swales and ditches shall be in accordance with Section G6- SEDIMENTATION AND TEMPORARY EROSION CONTROL.

G7.04 APPLICATION OF TOPSOIL

A. Unless otherwise shown on the plans, topsoil shall be placed to a minimum compacted depth of six (6) inches on all parts of the site not covered with structures, pavement, or existing woodland.

B. For all areas to be seeded:

1. Fertilizer (10-20-10) shall be applied at the rate of 30-lbs. per 1,000-sq. ft. or as determined by the soil test.

2. Seed shall be applied at the rate of five (5) lbs. per 1,000-sq. ft.

3. Fiber mulch shall be applied at the rate of 40-lbs. per 1,000-sq. ft.

C. After the topsoil is placed and before it is raked to true lines and rolled, limestone shall be spread evenly over the loam surface and thoroughly incorporated by heavy raking to at least one half the depth of topsoil.

D. The application of fertilizer may be performed hydraulically in one (1) operation with hydroseeding and fiber mulching. The Contractor is responsible for cleaning all structures and paved areas of unwanted deposits of the hydroseeded mixture.

G7.05 INSTALLATION OF TOPSOIL

A. Previously established grades, as shown on plans shall be maintained in a true and even condition.

B. Subgrade shall be prepared by tilling prior to placement of topsoil to obtain a more satisfactory bond between the two layers. Tillage operations shall be across the slope. Tillage shall not take place on slopes steeper than two (2) horizontal to one (1) vertical or where tillage equipment cannot be operated. Tillage shall be accomplished by disking or harrowing to a depth of nine (9) inches parallel to contours. Tillage shall not be performed when the subgrade is frozen, excessively wet, extremely dry or in other conditions which would not permit tillage. The subgrade shall be raked and all rubbish, sticks, roots and stones larger than two (2) inches shall be removed. Subgrade surfaces shall be raked or otherwise loosened immediately prior to being covered with loam.

C. Topsoil shall be placed over approved areas to a depth sufficiently greater than required so that after natural settlement and light rolling, the complete work will conform to the lines, grades and elevations indicated. No loam shall be spread in water or while frozen or muddy.

D. After topsoil has been spread, it shall be carefully prepared by scarifying or harrowing and hand raking. All stiff clods, lumps, roots, litter and other foreign material shall be removed from the loamed area and disposed of by the Contractor. The areas shall also be free of smaller stones, in excessive quantities, as

determined by the Engineer or the City. The whole surface shall then be rolled with a hand roller weighing not more than 100-lbs per foot of width. During the rolling, all depressions caused by settlement of rolling shall be filled with additional loam and the surface shall be regraded and rolled until a smooth and even finished grade is created.

E. Seeding shall be done within 10 days following soil preparation. Seed shall be applied hydraulically at the rates and percentages indicated. The spraying equipment and mixture shall be so designed that when the mixture is sprayed over an area, the grass seed and mulch shall be equal in quantity to the specified rates. Prior to the start of work, the Contractor shall furnish the Engineer with a certified statement as to the number of pounds of materials to be used per 100-gallons of water. This statement shall also specify the number of square feet of seeding that can be covered with the quantity of solution in the Contractor's hydroseeder. Upon completion of seeding operations, the Contractor shall furnish the Engineer and the City with a certified statement on the actual quantity of solution applied.

F. In order to prevent unnecessary erosion of newly topsoiled and graded slopes and unnecessary siltation of drainageways, the Contractor shall carry out seeding and mulching as soon as he/she has satisfactorily completed a unit or portion of the project. A unit or portion of the project shall be determined by the City or Engineer. When protection of newly loamed and graded areas is necessary at a time which is outside of the normal seeding season, the Contractor shall protect those areas by what ever means necessary as approved by the Engineer and the City and shall be responsible for prevention of siltation in the areas beyond the limit of work.

G. When newly graded subgrade areas cannot be topsoiled and seeded because of season or weather conditions and will remain exposed for more than 30 days, the Contractor shall protect those areas against erosion and washouts in accordance with Section G6- SEDIMENTATION AND TEMPORARY EROSION CONTROL, or by other measures as approved by the Engineer and the City. Prior to application of topsoil, any such materials applied for erosion control shall be removed or thoroughly incorporated into the subgrade by disking. Fertilizer shall be applied prior to spreading of topsoil.

H. On slopes, the Contractor shall provide against washouts by a method approved by the Engineer and the City. Any washout which occurs shall be regraded and reseeded at the Contractor's expense until a good sod is established.

G7.06 HYDROMULCHING

A. Fertilizer: 18-18-5, (Nitrogen, Phosphoric Acid, Potash) show release granular at a rate of 25-lbs per 1,000-sq. ft.

B. Water: The Contractor shall provide water necessary for grass planting and maintenance until acceptance by the City.

C. Planting Seasons: Grass planting by sodding, sprigging, or hydromulching shall normally be done between May 1 and September 15.

D. Hydromulching General

1. Submit Manufacturer’s product specifications and guaranteed purity analysis for fertilizer.

2. Product Delivery, Storage and Handling

a. Deliver fertilizer to site in original unopened containers bearing Manufacturer’s guaranteed chemical analysis, name, trademark and conformance to State Law.

b. Store fertilizer in a dry location and protect from weather.

3. Guaranty and Replacement

a. Provide guaranty for a period of one (1) year after final completion and acceptance of project, that the installed grass areas be at least the quality and condition as during acceptance.

b. Rehydromulch unacceptable areas during the guaranty period. Guaranty shall not include damage or loss of lawn due to acts of God, acts of vandalism or negligence on the part of the City.

E. Native Grass Hydromulching-Products

1. Grass Seed: Common Bermuda grass, hulled, minimum 82% pure live seed. All grass seed shall be free from noxious weed, grade "A" recent crop, recleaned and treated with appropriate fungicide at time of mixing. Seed shall be furnished in sealed, standard containers with dealer's guaranteed analysis.

2. Mulch: Conwed regular wood fiber mulch or approved equal.

3. Fertilizer: 18-18-5, water-soluble or an approved equal.

4. Topsoil: Supply high quality imported topsoil of loamy character to the limits shown on the Plans, high in humus and organic content from local agriculture source. Topsoil to be free from clay, lumps, coarse sands, stones, roots and other foreign matter. There shall be no toxic amounts of acid or alkaline elements. Soil to be used for on-site mixing of backfill.

F. Native Grass Hydromulching-Execution

1. Preparation: Fine grade to final elevation removing any debris and insuring the seedbed is smooth.

2. Installation: Use a hydromulcher (sprayer) and apply the mixture at the following rate. (Mix in accordance with Manufacturer's recommendations.)

a. Hydromulch mixture shall contain 2.5-lbs. of common Bermuda grass seed per 1,000-sq. ft. hydromulch applied.

b. Mulch – 60-lbs. per 1,000-sq. ft.

c. Fertilizer – 25-lbs (18-18-5) per 1,000-sq. ft.

3. General Maintenance

a Water the completed installation as necessary to insure germination of grass.

b. Maintain grass areas until complete germination and establishment of all areas.

c. Correct defective work as soon as apparent. Maintenance shall include, but not be limited to, weeding and fertilizing.

d. Clean up: Remove trash and debris from the site.

e. Acceptance: Substantial completion inspection to determine acceptance of grass areas will be made by the City after complete germination and coverage has been attained.

G7.07 MAINTENANCE OF DEVELOPING GRASS

A. The Contractor shall water and maintain all grassed areas until final acceptance. He shall also re-fertilize at the rate of one (1) pound of nitrogen and one (1) pound of phosphorous per 1,000-sq. ft. every 60 days until the grass is accepted.

B. Areas which, due to settling or improper leveling, do not have positive drainage shall be re-leveled with topsoil and replanted with grass.

C. Areas damaged by erosion, vehicle ruts and similar damage shall be re-leveled with topsoil and replanted. Finished ground surface shall be sufficiently smooth and level to facilitate mowing.

G7.08 ACCEPTANCE

A. Work under this section shall be considered acceptable when finish graded surfaces are level and well-drained, when there are no bare spots larger than three (3) square feet, when no more than 10 percent of the total area has bare spots larger than one (1) square foot, when not more than 15 bare spots larger than six (6) inches square and the grass is at least two (2) inches high, and when other requirements listed herein are met.

B. Acceptance of work normally coincides with final acceptance of the entire project. However, seasonal factors may be cause for delay in grass planting, development, and acceptance.

C. The City will accept responsibility for normal maintenance when grass is accepted. However, the Contractor shall remain responsible for any subsequent grass damage that he causes and for warranty of materials and workmanship for a period of not less than one (1) year from the time of acceptance.

D. The Contractor shall furnish full and complete written instruction for maintenance of the seeded areas to the City at the time of acceptance.

G7.09 PAYMENT

A. No separate payment will be made for finish grading, placement of topsoil or grass planting and fertilizing. All related costs shall be included in the proper item of the Proposal and Bid Schedule.

END OF SECTION

SECTION G8 – MISCELLANEOUS WORK AND CLEANUP

G8.01 SCOPE OF WORK

A. This specification covers the requirements to do the miscellaneous work not specified in other sections but obviously necessary for the proper completion of the work as shown on the Plans.

G8.02 SUBMITTALS

A. Within 10 days after the Notice to Proceed, the Contractor shall submit to the Engineer, in triplicate, a breakdown of any lump sum included in the Proposal and Bid Form. This breakdown shall be subject to approval by the Engineer and when so approved shall become the basis for determining progress payments and for negotiation of change orders, if required. In some contracts a lump sum item shall not be provided in the Proposal and Bid Form and shall be subsidiary to the other work items.

G8.03 GENERAL

A. When applicable, the Contractor will perform the work in accordance with other sections of this Specification. When no applicable specification exists the Contractor shall perform the work in accordance with the best modern practice and/or as directed by the Engineer.

B. The work of this Section includes, but is not limited to, the following:

1. Crossing and Relocating Existing Utilities
2. Restoring Driveways, Fences and Curbing
3. Cleaning Up
4. Incidental Work
5. Restoring Easements and Rights-of-Way

G8.04 CROSSING AND RELOCATING EXISTING UTILITIES

A. This item includes any extra work required in crossing culverts, water courses including streams and drainage ditches, drains, gas mains, water mains and water services and other utilities. This work shall include but is not limited to the following: bracing, hand excavation and backfill (except screened gravel) and any other work required for crossing the utility or obstruction not included for payment in other items of this specification. Notification of Utility Companies shall be the Contractor's responsibility.

B. In locations where existing utilities cannot be crossed without interfering with the construction of the work as shown on the Plans, the Contractor shall remove and relocate the utility as directed by the Engineer or Representative of the City or cooperate with the Utility Companies concerned if they relocate their own utility.

C. At pipe crossings and where designated by the Plans, the Contractor shall furnish and place crushed stone bedding so that the existing utility or pipe is firmly supported for its entire exposed length. The bedding shall extend to the mid-diameter of the pipe crossed.

G8.05 RESTORING OF DRIVEWAYS AND FENCES

A. Existing public and private driveways disturbed by the construction shall be replaced. Paved drives shall be repaved to the limits and thicknesses existing prior to construction. Gravel dirt roads and drives shall be replaced and regraded.

B. Fences in the vicinity of the work shall be protected from damage. If damaged, fences shall be replaced in condition equal to that prior to being damaged and the work shall be satisfactory to the City.

G8.06 CLEANING UP

A. The Contractor shall remove all construction material, excess excavation, buildings, equipment and other debris remaining on the job as a result of construction operations and shall restore the site of the work to a neat and orderly condition. All stored materials shall be kept in a neat manner, secured and protected from the public.

G8.07 INCIDENTAL WORK

A. Do all incidental work not otherwise specified, but obviously necessary to the proper completion of the Contract as specified and as shown on the Plans.

G8.08 RESTORING THE EASEMENTS AND RIGHTS-OF-WAY

A. Portions of the work may be within easements through private property. The Contractor shall be responsible for all damage to private property due to his/her operations. The Contractor shall protect from injury all walls, fences, cultivated shrubbery and vegetables, fruit trees, pavement, underground facilities, such as water pipes, or other utilities which may be encountered along the easement. If removal and replacement are required, it shall be done in a workmanlike manner so that replacement is equivalent to that which existed prior to construction.

B. Existing lawn and sod surfaces damaged by construction in easements shall be replaced. The Contractor may cut and replace the lawn and sod, or may restore the areas with an equivalent depth and quality of loam, seeded and fertilized as specified in Section G7- LOAMING, HYDROSEEDING AND PERMANENT EROSION CONTROL if acceptable to the owner of the private property and the City. These areas shall be maintained and re-seeded or re-sodded at the option of the owner of the private property and the City, if necessary, until all work under this Contract has been completed and accepted. Any additional work required to restore easements to their original condition shall be performed by the Contractor.

G8.09 PAYMENT

A. No separate payment shall be made for work performed in accordance with this section of the specifications, and the cost thereof shall be included in the proper items of the Proposal and Bid Schedule.

END OF SECTION

STREETS AND DRAINAGE

SECTION SD

TECHNICAL SPECIFICATIONS

SECTION SD1 - HOT MIX ASPHALTIC CONCRETE PAVEMENT

SD1.01 SCOPE OF WORK

A. This specification covers the requirements for furnishing and installing hot mix asphaltic concrete as shown in the Plans and specified within. Construction shall include a base course, a level-up course, a surface course or any combination of these courses as shown on the Plans, each course being composed of a compacted mixture of aggregate and asphalt mixed hot in a mixing plant, in accordance with the details shown on the Plans and the requirements herein.

SD1.02 SUBMITTALS

A. Within 30 days after the Notice to Proceed, the Contractor shall submit to the Engineer for approval, technical product literature including mix design, aggregate source, aggregate gradation, aggregate type, and all other pertinent data to illustrate conformance to the specification found within.

SD1.03 MATERIALS

A. The mineral aggregate shall be composed of a course aggregate, a fine aggregate, and if required, a mineral filler. Coarse aggregate shall be that part of the aggregate retained on the No. 10 sieve and shall be stone, crushed slag, crushed gravel, or gravel. Fine aggregate shall be that part passing the No. 10 sieve and shall consist of sand or screenings. Mineral filler shall consist of dry stone dust, Portland cement, or fly ash. Mineral aggregate shall meet the requirements of Item 340, Texas Department of Transportation, Standard Specifications for Construction of Highways, Streets and Bridges. The plasticity index of fine aggregate portion passing the No. 40 sieve shall not be more than six (6).

SD1.04 ASPHALTIC MATERIAL

A. Asphalt for the paving mixture shall meet the requirements of Texas Department of Transportation, Item 300 of the Standard Specifications for Construction of Highways, Streets and Bridges. The grade of asphalt used shall be designated by the Engineer or the City after design tests have been made using the mineral aggregate to be used in the job.

SD1.05 TACK COAT

A. Tack coat shall be in accordance with Texas Department of Transportation, Item 300 of the Standard Specifications for Construction of Highways, Streets and Bridges. Asphaltic material shall be approved by the Engineer or the City.

SD1.06 TYPES OF ASPHALTIC CONCRETE

A. The mixture shall be designed and tested in accordance with the current Texas Department of Transportation, Standard Specifications for Construction of Highways, Streets and Bridges, Item 340, Type D, and will have a laboratory density of not less than 94.5% nor more than 97.5%, and a stability of not less than 35.

B. The asphaltic material shall form from four to eight (4–8) percent of the mixture by weight or from nine to nineteen (9-19) percent of the mixture by volume.

SD1.07 EQUIPMENT

A Spreading and Finishing Machine

1. The spreading and finishing machine shall be a type approved by the Engineer, shall be capable of producing a surface that will meet the requirements of the typical cross section and the surface test, when required, and when the mixture is dumped directly into the finishing machine, shall have adequate power to propel the delivery vehicles in a satisfactory manner. The finishing machine shall be equipped with a flexible spring and/or hydraulic-type hitch sufficient in design and capacity to maintain contact between the rear wheels of the hauling equipment and the pusher rollers of the finishing machine while the mixture is being unloaded.

2. The use of any vehicle which requires dumping directly into the finishing machine and which the finishing machine cannot push or propel in such a manner as to obtain the desired lines and grades without resorting to hand-finishing will not be allowed. Unless otherwise permitted by the Plans, vehicles of the semi-trailer type are specifically prohibited from dumping directly into the finishing machine while in contact with the finishing machine. Vehicles dumping directly or indirectly into the finishing machine shall be so designed and equipped that unloading into the finishing machine can be mechanically and/or automatically operated in such a manner that overloading the finishing machine being used cannot occur and the required lines and grades will be obtained without resorting to hand-finishing.

3. Dumping of the asphaltic mixture in a windrow and then placing the mixture in the finishing machine with loading equipment will be permitted, provided that the loading equipment is constructed and operated in such manner that substantially all of the mixture deposited on the roadbed is picked up and loaded in the finishing machine without contamination of foreign material of the mixture, and excessive temperature loss is not encountered. The loading equipment will be so designed and operated that the finishing machine being loaded will obtain the required line, grade, and surface without resorting to hand-finishing. Any operation of the loading equipment resulting in the accumulation and subsequent shedding of this accumulated material into the asphaltic mixture will not be permitted.

B. Rolling Equipment

1. Rolling equipment shall consist of pneumatic tire rollers, two-axle tandem roller weighing not less than eight (8) tons, three-wheel roller weighing not less than 10-tons, three-axle tandem roller weighing not less than 10-tons, and trench rollers having a 20-inch wheeldrive and producing 325 pounds per linear inch of roller width at a speed of 1.8 miles per hour in low gear.

C. Straight Edges and Templates

1. The Contractor shall provide an acceptable 10-foot straight edge for surface testing.

SD1.08 CONSTRUCTION METHODS

A. The prime coat, tack coat or the asphaltic mixture, when placed with a spreading and finishing machine, shall not be placed when the air temperature is below 50 degrees F and is falling, but it may be placed when the air temperature is above 40 degrees F and is rising. The air temperature shall be taken in the shade away from artificial heat. It is further provided that the prime coat, tack coat or asphaltic mixture shall be placed only when the humidity, general weather conditions and temperature and moisture condition of the base, in the opinion of the Engineer or the City, are suitable.

B. Prime Coat

1. A prime coat is required, and shall be applied at the rate determined by the Engineer but not less than 0.2-gallons per square yard of MC-1 asphalt. The asphaltic concrete shall not be applied on a previously primed flexible base until the primed base has completely cured to the satisfaction of the Engineer and the City.

C. Transporting Asphaltic Concrete

1. The asphaltic mixture, prepared as directed above, shall be hauled to the work site in tight vehicles previously cleaned of all foreign material. The dispatching of the vehicles shall be arranged so that all material delivered may be placed, and all rolling shall be completed during daylight hours. In cool weather, or for long hauls, canvas covers and insulating of the truck bodies may be required. The inside of the truck body may be given a light coating of oil, lime slurry or other material satisfactory to the Engineer and the City, if necessary, to prevent mixture from adhering to the body.

D. Placing

1. Generally, the asphaltic mixture shall be dumped and spread on the approved prepared surface with the specified spreading and finishing machine, in such manner that when properly compacted, the finished pavement will be smooth, of uniform density, and will meet the requirements of the typical cross-sections and the surface tests. During the application of asphaltic material, care shall be taken to prevent splattering of adjacent pavement, curb and gutter, and structures. When the asphaltic mixture is placed in a narrow strip along the edge of an existing pavement, or used to level up small areas of an existing pavement, or placed in small irregular areas where the use of a finishing machine is not practical, the finishing machine may be eliminated when authorized by the Engineer or the City, provided a satisfactory surface can be obtained by other approved methods.

E. Compacting

1. Rolling: The pavement shall be compressed thoroughly and uniformly with the specified roller and/or other approved rollers. Rolling with the three-wheel and tandem rollers shall start longitudinally at the sides and proceed toward the center of the pavement, overlapping on successive trips by at least half the width of the rear wheel. Alternate trips of the roller shall be slightly different in length. Rolling with pneumatic-tire roller shall be done as directed by the Engineer. Rolling shall be continued until no further compression can be obtained and all roller marks are eliminated. One (1) tandem roller, one (1) pneumatic-tire roller, and at least one (1) three-wheel roller, as specified above, shall be provided for each job. If the Contractor elects, he may substitute the three-axle tandem roller for the two-axle tandem roller and/or the three-wheel roller; but in no case shall less than three rollers be in use on each job. Additional rollers shall be provided if needed. The motion of the roller shall be slow enough at all times to avoid displacement of the mixture. If any displacement occurs, it shall be corrected at once by the use of rakes and of fresh mixtures where required. The roller shall not be allowed to stand on pavement which has not been fully compacted. To prevent adhesion of the surface mixture to the roller, the wheels shall be kept thoroughly moistened with water, but an excess of water will not be permitted. All rollers must be in good mechanical condition. Necessary precautions shall be taken to prevent the dropping of gasoline, oil, grease, or other foreign matter on the pavement, either when the rollers are in operation or when standing. Regardless of the method used for compaction, all rolling to achieve specified density shall cease when the Hot Mix Asphaltic Mixture drops below 175°F (80°C).

2. In-Place Density: The Hot Mix Asphaltic mixture shall be tested daily at the project site for conformance to specification requirements. Unless directed otherwise by the Engineer or designated representative, a bag sample and a core or section will be obtained for each 2000 square yards or portion of paving each day, with a minimum of three bag samples and three cores for each day's paving.

   Bag samples shall be taken during lay-down operations. The primary sampling point for the bag samples shall be from the windrow if a windrow elevator is used. If a windrow elevator is not used, the sample shall be taken from the middle of the paving machine hopper. Gradation, asphalt content and stability value of the hot mix asphaltic mixture shall be reported for each of the bag samples. The stability value reported for each of the bag samples shall be the average of three (3) tests per bag.

Pavement thickness and in-place density shall be determined from the field cores or sections. The average of all hot mix asphaltic concrete pavement core or section thicknesses shall meet the minimum thickness of 2.0". No individual core or section thickness deficiency may be greater than 0.2 inches. Pavement that does not meet the thickness specification shall be removed and replaced as outlined below. The in-place density tests are intended for compaction-control tests and will be tested according to Test Method Tex-207-F. The core or section densities shall average from 91.0% to 96.0% of the maximum theoretical density except that the minimum acceptable density of an individual sample is 89.0% or the maximum acceptable density of an individual sample is 97.0%. There will be no two consecutive core or section densities below 91.0% or above 96.0%. Asphalt pavement represented by a density less than 89.0%, more than 97.0% or two consecutive densities less than 91.0% shall be removed and replaced.

Any pavement to be removed and replaced will be removed and replaced from curb to curb or edge of asphalt to edge of asphalt at the contractor's expense. Additional density tests shall be used to delineate the limits of the in-place hot mix asphaltic pavement that does not meet the density specification and the results of the tests shall not be used in the calculation of the overall average density. Protocol to assess the area of asphalt pavement removal and replacement shall start between the failing density or two consecutive densities that are less than 91.0% and the next passing density to either side of the failing pavement. Additional cores or sections will be required to quantify the area of replacement back to an in-place density of 91.0%. Backscattering (nuclear densities) shall not be used to determine the actual density of asphaltic pavement.

Pavements with low-density results may be retested; but the pavement shall not receive any additional compactive effort.

Final acceptance of the pavements shall be the responsibility of the Engineer.

3. Hand-Tamping: The edges of the pavement along curbs, headers and similar structures, and all places not accessible to the roller or in such position as will not allow thorough compaction with the rollers, shall be thoroughly compacted with lightly oiled tamps.

F. Surface Tests

1. The surface of the pavement, after compaction, shall be smooth and true to the established line, grade, and cross-section, and when tested with a 10-foot straightedge placed parallel to the centerline of the roadway or tested by other equivalent and acceptable means, except as provided herein, the maximum deviation shall not exceed 1/4-inch in 10-feet, and any point in the surface not meeting this requirement shall be corrected.

SD1.09 ROADS DAMAGED BY CONSTRUCTION

A. The Contractor shall reconstruct existing asphalt paved roads which are damaged as a result of construction of this project at no additional cost to the City. Reconstruction shall consist of reconstructing the road to an "as new condition" to the existing pavement cross section. The Contractor may use existing base material, adding new base material as needed. Contractor shall compact and reshape road subgrade to existing grade. The subbase and base shall be compacted in accordance with these specifications. The Contractor shall install at least two (2) inches of hot-mix asphalt pavement in accordance with these specifications.

SD1.10 MEASUREMENT AND PAYMENT

A. Payment for furnished and installed hot mix asphaltic concrete pavement shall be paid according to the unit price per square yard in the proper item of the Proposal and Bid Schedule.

B. All work and materials to complete the hot mix asphaltic concrete shall be subsidiary to this item.

END OF SECTION

TECHNICAL SPECIFICATIONS

SECTION SD2 – ROADWAY EXCAVATION

SD2.01 SCOPE OF WORK

A. This specification covers the requirements for shaping and finishing of all earthwork on the entire length of roadway, and approaches to same, in conformity with the required lines, grades and typical cross sections and in accordance with specification requirements herein outlined. Compaction shall conform to the method of "Density Control" and/or "Ordinary Compaction" as shown on the Plans and Specifications.

SD2.02 SUBMITTALS

A. None required unless specifically called for in the Plans, Standards, or requested by the City or Engineer.

SD2.03 CONSTRUCTION METHODS

A. All roadway excavation and corresponding embankment construction shall be performed as specified herein and in Section S3- EMBANKMENT, and the completed roadway shall conform to the established alignment, grades and cross sections.

B. All suitable excavated materials shall be utilized, insofar as practicable, in constructing the required roadway sections. Unsuitable roadway excavation and roadway excavation in excess of that needed for the construction of the roadway shall be disposed of outside the limits of the right-of-way. Unsuitable material encountered below subgrade elevation in roadway cuts, shall be removed and replaced, as directed by the Representative of the City with material from the roadway excavation or with other suitable material.

C. During construction, the roadbed and ditches shall be maintained in such condition as to insure proper drainage at all times and ditches and channels shall be so constructed and maintained as to avoid damage to the roadway section. Soils with plasticity index (PI) of 20 or more shall be stabilized with an amount of lime adequate to reduce the PI to less than 20. Type A Grade 1 base material may be used with a minimum ratio of 1 to 1, in lieu of lime. If using lime treatment refer to Item 260 in the Texas Department of Transportation's "Standard Specifications for Construction of Highways, Streets and Bridges".

NOTE: **ALL UNDERGROUND UTILITIES SHALL BE INSTALLED PRIOR TO ANY LIME TREATMENT OR FLEXIBLE BASE PLACEMENT.**

NOTE: Blue-tops will be set on the center and crown of the streets or roads at every 50-foot station. These grade stakes will be to finished grade and visible for inspection before flexible base is applied.

SD2.04 PAYMENT

A. No separate payment will be made for work performed in accordance with this specification. Select back fill shall be paid for according to the unit price per cubic yard according to the appropriate item, and the cost thereof shall be included in the proper items of the Proposal and Bid Schedule.

END OF SECTION

TECHNICAL SPECIFICATIONS

SECTION SD4 – FLEXIBLE BASE
(Crushed Stone)

SD4.01 SCOPE OF WORK

A. This specification covers the requirements for the use of "Flexible Base (Crushed Stone)" for this project.

SD4.02 SUBMITTALS

A. Within 30 days after the Notice to Proceed, the Contractor shall submit to the Engineer for approval, technical product literature including binding material, additives, aggregate source, aggregate type, aggregate gradation and all other pertinent data to illustrate conformance to the specification found within.

SD4.03 GENERAL

A. "Flexible Base (Crushed Stone)"shall consist of a foundation course for surface course or for other base courses; shall be composed of crusher-run broken stone; and shall be constructed as herein specified in one or more courses in conformity with the typical sections shown on Plans and to the lines and grades as established by the Plans.

SD4.04 MATERIAL

A. The material shall be crushed and shall consist of durable particles of stone mixed with approved binding material. The material source shall be approved by the Representative of the City, and conform to the requirements as follows:

B. When properly slaked and tested by standard Texas Department of Transportation laboratory methods, the flexible base material shall meet the following requirements:

C. Physical requirements

a. General. All types shall meet the physical requirements for the specified grade(s) as set forth in Table 1.

Additives, such as, but not limited to, lime, cement or fly ash, shall not be used to alter the soil constants or strengths shown in Table 1, unless otherwise shown on the Plans.

Unless otherwise shown on the Plans, the base material shall have a minimum Bar Linear Shrinkage of two (2) percent as determined by Test Method Tex-107-E, Part II.

b. The flexible base shall be:

1. Type A. Type A material shall be crushed stone produced from oversized quarried aggregate, sized by crushing and produced from a naturally occurring single source. Crushed gravel or uncrushed gravel shall not be acceptable for Type A material. No blending of sources and/or additive materials will be allowed in Type A material.

TABLE 1
PHYSICAL REQUIREMENTS

Grade 1	
Triaxial Class 1: Min. compressive strength, psi: 45 at 0 psi lateral pressure and 175 at 15 psi lateral pressure	
Master Grading	
1-$^{3}/_{4}$"	0
$^{7}/_{8}$"	10-35
$^{3}/_{8}$"	30-50
No. 4	45-65
No. 40	70-85

Grade 1
Max LL..... 35
Max PI..... 10
Wet Ball Mill
Max 40
Max increase in passing
No. 40 20

1. Gradation requirements are percent retained on square sieves.

2. When a magnesium soundness value is shown on the Plans the material will be tested in accordance with Test Method Tex-411-A.

Sieve Analysis	Tex-110-E
Moisture-Density Determination	Tex-113-E
Roadway Density	Tex-115-E
Wet Ball Mill	Tex-116-E
Triaxial Tests (Part I or II as selected by the Engineer)	Tex-117-E
Particle Count	Tex-460-A, Part I

Samples for testing the base material for triaxial class, soil constants, gradation and wet ball mill will be taken prior to the compaction operations.

SD4.05 TOLERANCES

A. The limits establishing reasonably close conformity with the specified gradation and plasticity index are defined by the following:

B. The City may accept the material, providing not more than two (2) out of 10 consecutive gradation tests performed are outside the specified limit on any individual or combination of sieves by no more than five (5) percent and where no two (2) consecutive tests are outside the specified limit.

C. The City may accept the material providing not more than 2 out of 10 consecutive plasticity index samples tested are outside the specified limit by no more than two (2) points and where no two (2) consecutive tests are outside the specified limit.

SD4.06 CONSTRUCTION METHODS

A. Preparation of Subgrade

1. The roadbed shall be excavated and shaped in conformity with the typical sections, lines and grades as shown on the Plans. All unstable or otherwise objectionable material shall be removed from the subgrade and replaced with approved material. All holes, ruts and depressions shall be filled with approved material, and if required, the subgrade shall be thoroughly wetted with water and reshaped and rolled to the extent directed in order to place the subgrade in an acceptable condition to receive the base material. The surface of the subgrade

shall be finished to line and grade as established and in conformity with the typical section shown on the Plans, and any deviation in excess of ½-inch in cross section and in a length of 16-feet measured longitudinally shall be corrected by loosening, adding or removing material, reshaping and recompacting by sprinkling and rolling. Sufficient subgrade shall be prepared in advance to insure satisfactory prosecution of work.

B. First Course

1. Immediately before placing the base material, the subgrade shall be checked as to conformity with grade and section.

2. The material shall be delivered in approved vehicles of a uniform capacity and it shall be the charge of the Contractor that the required amount of specified material shall be delivered in each 100-foot station. Material deposited upon the subgrade shall be spread and shaped the same day unless otherwise directed by the City in writing. In the event inclement weather or other unforeseen circumstances render impractical the spreading of the material during the first 24-hour period, the material shall be scarified and spread as directed by the City. The material shall be sprinkled, if directed, and shall then be bladed, dragged and shaped to conform to typical sections as shown on the Plans. The base layer shall be constructed in lifts not exceeding six (6) inches compacted thickness with each course being of equal thickness. All areas and "nests" of segregated coarse or fine material shall be corrected or removed and replaced with well graded material, as directed by the City.

3. The course shall be compacted by the method of compaction hereinafter specified as the "Density Control" method of compaction.

   a. The course shall be sprinkled as required and compacted to the extent necessary to provide not less than the percent density as hereinafter specified under "Density". In addition to the requirements specified for density, the full depth of flexible base shown on the Plans shall be compacted to the extent necessary to remain firm and stable under construction equipment. After each section of flexible base is completed, density tests shall be taken every 750 square yards of roadbed surface or every 250 linear feet, whichever is the least. If the material fails to meet the density requirements, it shall be reworked as necessary to meet these requirements. Throughout this entire operation the shape of the course shall be maintained by blading, and the surface upon completion shall be smooth and in conformity with the typical section shown on the Plans and to the established lines and grades. In that area on which pavement is to be placed, any deviation in excess of ¼-inch in cross section and in a length of 16-feet measured longitudinally shall be corrected by loosening, adding or removing material, reshaping and recompacting by sprinkling and rolling. All irregularities, depressions or weak spots which develop shall be corrected immediately by scarifying the areas affected, adding suitable material as required, reshaping and recompacting by sprinkling and rolling. Should the base course, due to any reason or cause, lose the required stability, density and finish before the surfacing is complete, it shall be recompacted and refinished at the sole expense of the Contractor. The base material shall be placed at the optimum moisture contents to ± 3%.

C. Succeeding Courses

1. Construction methods shall be the same as prescribed for the first course.

D. Density

1. When the "Density Control" method of compaction is used, each course of flexible base shall be compacted to the percent density indicated below. The testing will be as outlined in TEX 113E. It is the intent of this specification to provide in that part of the base included in the flexbase section as shown on the Plans immediately below the finished surface of the roadway, not less that 100 percent of the density as determined by the compaction ratio method. Field density determination shall be made in accordance with approved methods.

SD4.07 NOTES

A. Invoices showing total amount of flexible base delivered to each street or road shall be furnished to the City before asphalt is applied.

B. Bluetops will be set on the center, crown and back of curb of the streets or roads every 50-foot station or sufficient to maintain line and grade. These grade stakes will be to finished grade and visible for inspection before asphalt is applied.

SD4.08 PAYMENT

A. Payment for furnished and installed flexible base shall be paid according to the unit price per square yard in the proper item of the Proposal and Bid Schedule.

B. All work and materials to complete the installation of flexible base shall be subsidiary to this item.

END OF SECTION

THIS PAGE INTENTIONALLY LEFT BLANK.

TECHNICAL SPECIFICATIONS

SECTION SD5 - STRIPING

SD5.01 SCOPE OF WORK

A. This specification covers the requirements for furnishing and installing pavement markings as shown on the Plans and specified within.

SD5.02 SUBMITTALS

A. Within 30 days after the Notice to Proceed, the Contractor shall submit to the Engineer or the City for approval, technical product literature including material type, test data, and all other pertinent data to illustrate conformance to the specification found within.

SD5.03 MATERIALS

A. All pavement markings shall be thermoplastic type materials that require heating to elevated temperatures for application. They shall conform to Texas Department of Transportation Materials Specification D-9-8220. Each container of thermoplastic material shall be clearly marked to indicate the color, weight, type of material, Manufacturer's name and the lot/batch number.

SD5.04 STREET SIGNS

A. All signage sheeting shall be high intensity or better. All signage posts shall be 2.375" OD x .095" thin wall steel tubing. All signs shall have breakaway foundations. All signage shall meet the current edition of TMUTCD.

SD5.05 EQUIPMENT

A. All equipment used to place pavement markings shall be maintained in a satisfactory condition. The equipment shall be able to place markings at a rate that will produce a uniform product meeting all the requirements set within item 666 of the standard specifications for Construction of Highways, Streets and Bridges. It shall be capable of placing linear markings up to eight (8) inches in width in a single pass and able to place a center line and no passing barrier line configuration of one (1) broken line with two (2) solid lines at the same time to the alignment and spacing shown on the Plans. Equipment shall be capable of placing lines with clean edges of a uniform cross section within a tolerance of $^{1}/_{8}$ of an inch per four (4) inches width of marking. It shall have an automatic cut-off device with manual operating capabilities to provide clean, reasonably square marking ends to the satisfaction of the Engineer or the City and provide a method of applying broken line in an approximate stripe-to-gap ratio of 10 to 30. The length of the stripe shall not be less than 10-feet or more than 10.5-feet. The total length of any stripe-gap cycle shall not be less than 39.5-feet or more than 40.5-feet. It shall provide a continuous mixing and agitation of the pavement marking material. The use of pans, aprons or similar appliances will not be permitted for longitudinal striping applications. Beads shall be applied by an automatic bead dispenser that is attached to the pavement marking equipment in such a manner that the beads are dispensed uniformly and almost instantly as the marking is placed on the pavement surface. The bead dispenser shall have an automatic cut-off control, synchronized with the cut-off of the pavement marking equipment. A hand held thermometer shall be kept on the project during the placement of pavement markings capable of measuring the temperature of the pavement marking material.

SD5.06 CONSTRUCTION METHODS

A. Pavement marking shall be applied with an approximate stripe-to-gap ratio of 10 to 30 when the application is broken line striping. The length of the broken stripe shall not be less than 10-feet nor more than 10.50-feet. The total length of any stripe-gap cycle shall not be less than 39.50-feet nor more than 40.50-feet.

B. With prior approval from the City of Georgetown, pavement markings may be placed on roadways open to traffic. When markings are to be placed under traffic, a minimum of interference to the operation of the traffic flow shall be maintained. Traffic control shall be maintained as shown on the

approved Traffic Control Plan. All markings placed under open-traffic conditions shall be protected from traffic damage and disfigurement.

C. The deviation rate in pavement marking alignment shall not exceed one (1) inch per 200-feet of roadway and the maximum deviation shall not exceed two (2) inches nor shall any abrupt deviations be acceptable.

D. Markings shall have a uniform cross section. The density and quality of the markings shall be uniform throughout their thickness. The applied markings shall have no more than five (5) percent, by area, of holes or voids and shall be free of blisters.

E. Markings shall be reflectorized both internally and externally. Glass beads shall be applied to the materials at a uniform rate sufficient to achieve uniform and distinctive retroflective characteristics when observed in accordance with Test Method Tex-828-B.

F. Pavement markings that are not in alignment or sequence, as shown on the Plans or Standards, shall be removed and replaced at the sole expense of the Contractor.

SD5.07 SURFACE PREPARATION

A. New Portland cement concrete surfaces shall be cleaned to remove curing membrane, dirt, grease, loose and/or flaking existing construction markings and other forms of contamination.

B. Older Portland cement concrete surfaces and asphalt surfaces that exhibit loose and/or flaking existing markings shall be cleaned to remove all loose and flaking markings.

C. All pavement on which pavement markings are to be placed shall be completely dry.

SD5.08 APPLICATION

A. Unless otherwise shown on the Plans, Portland cement concrete surfaces and asphaltic surfaces that are three (3) years old or older shall be sealed by the use of paint type striping. The paint type markings shall be placed a minimum of two (2) and a maximum of 30 calendar days in advance of placing the thermoplastic type pavement markings. If the paint type markings become dirty for any reason prior to placing the thermoplastic type markings, they shall be cleaned by washing, brushing, compressed air or other means approved. The pavement and paint type marking shall both be thoroughly dry before any thermoplastic type markings are placed. The color of the paint type markings shall be the same as the thermoplastic type markings.

B. Pavement markings shall not be applied when the temperature and moisture limitations are beyond the Manufacturer's recommendation. The minimum thickness for thermoplastic markings shall be 0.060-inches (60-mil) for edgeline markings and 0.090-inches (90-mil) for stop bars, legends, symbols, gore and centerline/no passing barrier line markings, when measured in accordance with Test Method Tex-854-B. The maximum thickness of all thermoplastic type markings shall be 0.180-inches (180 mil).

C. All markings which do not meet the specifications found within or are not satisfactory to the striping plan, installation of the markings, or do not meet the requirements of the project, shall be removed and replaced at the sole expense of the Contractor. In the event that damage is done to the pavement surface in the replacement operation, the damage shall be corrected to the satisfaction of the City at the sole expense of the Contractor.

SD5.09 MEASUREMENT AND PAYMENT

A. Payment for furnished and installed pavement markings shall be paid according to the unit price per linear foot in the proper item of the Proposal and Bid Schedule.

B. All work and materials to complete the pavement markings shall be subsidiary to this item.

END OF SECTION

WASTEWATER SPECIFICATIONS

SECTION WW

TECHNICAL SPECIFICATIONS

SECTION WW1 – CONCRETE MANHOLES (WASTEWATER)

WW1.01 SCOPE OF WORK

A. This specification covers the requirements to install precast concrete manholes, frames and covers, and appurtenances as shown on the Plans and as specified herein.

WW1.02 SUBMITTALS

A. Within 30 days after the Notice to Proceed, the Contractor shall submit to the Engineer or the City for approval, shop drawings, product data, materials of construction, and details of installation shall be submitted in accordance with Section CIP10- SUBMITTALS. Submittals shall include the following: base sections, riser sections, eccentric conical top sections, flat slab tops, grade rings with notarized certificate indicating compliance with ASTM C478, pipe connection to manhole, manhole frame and cover with notarized certificate indicating compliance with ASTM A48, Class 30, method of repair for minor damage to precast concrete sections, manhole lining system.

B. Design Data

1. Precast concrete structures:

a. Six (6) copies of sectional plan(s) and elevations showing dimensions and reinforcing steel placement.

b. Six (6) copies of concrete design mix.

C. Test Reports

1. Precast concrete structures:

a. Six (6) copies of concrete test cylinder reports from an approved testing laboratory certifying conformance with specifications.

WW1.03 REFERENCE STANDARDS

A. American Society for Testing and Materials (ASTM)

1. ASTM A48 - Specification for Gray Iron Castings.

2. ASTM A615 - Standard Specification for Deformed and Plain Billet-Steel Bars for Concrete Reinforcement.

3. ASTM C33 - Specification for Concrete Aggregates.

4. ASTM C150 - Standard Specification for Portland Cement.

5. ASTM C478 - Standard Specification for Precast Reinforced Concrete Manhole Sections.

6. ASTM D4101 - Specification for Propylene Plastic Injection and Extrusion Materials.

B. American Concrete Institute (ACI)

1. ACI 318 - Building Code Requirements for Reinforced Concrete.

2. ACI 350R - Concrete Sanitary Engineering Structures.

C. American Association of State Highway and Transportation Officials (AASHTO)

1. Standard Specifications for Highway, Streets and Bridges.

D. Occupational Safety and Health Administration (OSHA)

E. Where reference is made to one of the above standards, the revision in effect at the time of bid opening shall apply.

WW1.04 QUALITY ASSURANCE

A. All material shall be new and unused.

B. Materials' quality, manufacturing process and finished sections are subject to inspection and approval by Engineer or other City representative. Inspection may be made at place of Manufacture, at work site following delivery, or both.

C. Materials will be examined for compliance with ASTM specifications, these Specifications and approved Manufacturer's drawings. Additional inspection criteria shall include: appearance, dimensions(s), blisters, cracks and soundness.

D. Materials shall be rejected for failure to meet any Specification requirement. Rejection may occur at place of manufacture, at work site, or following installation. Mark for identification rejected materials and remove from work site immediately. Rejected materials shall be replaced at no cost to City.

E. Repair minor damage to precast concrete sections by approved method, if repair is authorized by Engineer or the City.

WW1.05 PRODUCTS

A. Reference to a Manufacturer's name and model or catalog number is for the purpose of establishing the standard of quality and general configuration desired.

B. Like items of materials/equipment shall be the end products of one Manufacturer in order to provide standardization for appearance, operation, maintenance, spare parts and Manufacturer's service.

C. Provide lifting lugs or holes in each precast section for proper handling.

WW1.06 PRECAST CONCRETE MANHOLE SECTIONS

A. Precast concrete base sections, riser sections, transition top sections, flat slab tops and grade rings shall conform to ASTM C478 and meet the following requirements:

1. Bottom slab thickness shall be 12-inches.

2. Top section shall be flat slab with a minimum clear opening of $32\ ^{7}/_{8}$-inches diameter.

3. Base, riser and transition top sections shall have tongue and groove joints.

4. Sections shall be cured by an approved method.

5. Precast concrete sections shall be shipped after concrete has attained 3,000 psi compressive strength.

6. Design precast concrete base, riser, transition top, flat slab top and grade ring for a minimum HS-20 loading plus earth load. Calculate earth load with a unit weight of 130 pounds per cubic foot.

7. Mark date of manufacture, name and trademark of Manufacturer on the inside of each precast section.

8. Construct and install precast concrete base as shown on the Plans.

9. Provide integrally cast knock-out panels in precast concrete manhole sections at locations, and with sizes shown on Plans. Knock-out panels shall have no steel reinforcing.

B. Manhole diameter shall be as shown on the Plans, but not less than the diameter of the largest connecting pipe plus two (2) feet.

C. Pipe Sections

Pipe sections shall conform to current specifications for Precast Reinforced Manhole Sections, ASTM Designation C478, with the following additions:

1. Pipe shall be machine made by a process which will provide for uniform placement of zero slump concrete in the form and compaction by mechanical devices which will assure a dense concrete in the finished product.

2. Aggregates for the concrete shall consist of limestone aggregates in the proportion of at least 75% by weight of the total aggregates.

3. Minimum wall thickness for the manhole risers shall be as listed under Wall "B" in the "Class Tables" of ASTM C76 for Class III pipe.

D. Joints

1. Joints shall conform to the joint specifications in ASTM C478, C76, and ASTM C443. All manhole sections, including the bottom section, shall be furnished with "O-ring" type rubber gasket joints. The joints shall be furnished and installed with the bell down to resist groundwater infiltration. All joints shall be sealed with mortar or an approved non-shrink grout on the inside and the outside of the manhole. Grade rings shall be mortared to each other and on the inside and outside to provide a waterproof seal.

E. Manhole Steps

1. Unless specifically approved by the City, manhole steps shall not be provided.

WW1.07 MANHOLE FRAME AND COVER

A. Manhole frames and covers shall be of good quality, strong, tough, even grained cast iron, smooth, free from scale, lumps, blisters, sand holes and defects of any kind which render them unfit for the service for which they are intended. Manhole covers and frame seats shall be machined to a true surface. Castings shall be thoroughly cleaned and subject to hammer inspection. Cast iron shall conform to ASTM A48, Class 30.

B. Manhole covers shall have a diamond pattern, pickholes and the word SEWER as appropriate cast in three (3) inch letters. Manhole frame and covers shall be Neenah Foundry, Western Iron Works, Vulcan Foundry, or equal. Model numbers refer to Western Iron works products:

1. Manhole Frame and cover - WRM-36.

WW1.08 JOINTING PRECAST MANHOLE SECTIONS

A. Seal tongue and groove joints of precast manhole sections with rubber "O"-ring gasket. O-ring gasket shall conform to ASTM C443.

B. Completed joint shall withstand 15 psi internal water pressure without leakage or displacement of gasket or sealant.

WW1.09 PIPE CONNECTIONS TO MANHOLE

A. Connect pipe to manhole in the following ways:

1. Flexible sleeve - Integrally cast sleeve in precast manhole section or install sleeve in a formed or cored opening. Fasten pipe in sleeve with stainless steel clamp(s). Coat stainless steel clamp(s) with bituminous material to protect from corrosion. Flexible sleeve shall be Lock Joint Flexible Manhole Sleeve; Kor-N-Seal connector; PSX Press-Seal Gasket or equal.

2. Compression gasket - Integrally cast compression gasket in precast manhole section. Insert pipe into compression gasket. Compression gasket shall be A-Lok, or equal.

WW1.10 INSTALLATION

A. Manhole Installation

1. Manholes shall be constructed to the dimensions shown on the Plans and as specified herein. Protect all work against flooding and flotation.

2. Place manhole base on a bed of screened gravel eight (8) inches in depth as shown on the Plans. Set manhole base so that a maximum grade adjustment of eight (8) inches is required to bring the manhole frame and cover to final grade.

Use precast concrete grade rings to adjust manhole frame and cover to final grade.

3. Set precast concrete barrel sections plumb with a $^{1}/_{4}$-inch maximum out of plumb tolerance allowed. Seal joints of precast barrel sections with either a rubber "O" ring set in a recess or preformed flexible joint sealant in sufficient quantity to fill 75 percent of the joint cavity. Fill the outside and inside joint with non-shrink mortar and finished flush with the adjoining surfaces. Caulk the inside of any leaking barrel section joint with non-shrink grout to the satisfaction of the Engineer and the City.

4. Allow joints to set for 14 hours before backfilling unless a shorter period is specifically approved by the Engineer or the City.

5. Plug holes in the concrete barrel sections required for handling with a non-shrinking grout or non-shrinking grout in combination with concrete plugs. Finish flush on the inside.

6. Core holes in precast sections to accommodate pipes prior to setting manhole sections in place to prevent jarring which may loosen the mortar joints.

7. Backfill carefully and evenly around manhole sections.

B. Manhole Pipe Connections

1. Construct manhole pipe connections, including pipe stubs, as specified above. Close or seal pipe stubs for future connections with a gasketed watertight plug.

C. Setting Manhole Frame and Cover

1. Set manhole covers and frames in a full mortar bed. Utilize precast concrete grade rings, for a maximum adjustment of twelve (12) inches, to assure frame and cover are set to the finished grade. Set manhole frame and cover to final grade prior to placement of permanent paving.

WW1.11 TESTS

A. Test each manhole in accordance with Section CIP12- TESTING OF PIPELINES AND MANHOLES. Engineer or the City's representative shall observe each test.

WW1.12 CLEANING

A. Thoroughly clean all new manholes of all silt, debris and foreign matter of any kind, prior to final inspections.

WW1.13 PAYMENT

A. Payment for furnished and installed manholes shall be paid according to the unit price per each in the proper item of the Proposal and Bid Schedule.

B. All work and materials to complete the reinforced concrete pipe including but not limited to excavation, bedding, backfill, connection to pipe, etc. shall be subsidiary to this item.

END OF SECTION

TECHNICAL SPECIFICATIONS

SECTION WW2 – POLYVINYL CHLORIDE (PVC) PIPE-WASTEWATER

WW2.01 SCOPE OF WORK

A. This specification covers the requirements to install and test polyvinyl chloride (PVC) pipe and fittings, including excavation, sheeting, storing, dewatering, pipe laying, jointing, testing, backfilling, and any other work that is required or necessary to complete the installation as shown in the Plans as specified herein, complete as shown on the Plans and as specified herein.

WW2.02 SUBMITTALS

A. Within 30 days of the Notice to Proceed, the Contractor shall submit to the Engineer or the City for approval, technical product literature including the names of the pipe and fittings suppliers, a list of materials to be furnished, shop drawings on required pipes and fittings, certified test reports that the pipe for this Contract was manufactured and tested in accordance with the ASTM Standards specified herein, and all other pertinent data to illustrate conformance to the specification found within.

WW2.03 QUALITY ASSURANCE

A. All PVC pipe and fittings shall be from a single Manufacturer. The Supplier shall be responsible for the provisions of all test requirements specified in ASTM D3034 or ASTM F789 as applicable. In addition, all PVC pipe to be installed under this Contract may be inspected at the plant for compliance with these specifications by an independent testing laboratory provided by the City. The Contractor shall require the Manufacturer's cooperation in these inspections. The cost of plant inspection of all pipe approved for this Contract, plus the cost of inspection of disapproved pipe, will be borne by the Contractor.

B. Inspections of the pipe may also be made by the Engineer or other representatives of the City after delivery. The pipe shall be subject to rejection at any time on account of failure to meet any of the Specification requirements, even though sample pipes may have been accepted as satisfactory at the place of manufacture. Pipe rejected after delivery shall be marked for identification and shall be removed from the job at once.

WW2.04 POLYVINYL CHLORIDE (PVC) WASTEWATER PIPE AND FITTINGS

A. Pipe and fittings shall be Type PSM, PVC SDR 26 with full diameter dimensions and shall conform to ASTM D3034, or Type PS-46 PVC conforming to ASTM F789, for sizes 4 through 15-inch and shall conform to ASTM F679 for sizes 18 through 27-inch. Straight pipe shall be furnished in lengths of not more than 13-feet and wyes shall be furnished in lengths of not more than three (3) feet. Saddle wyes will not be allowed.

B. PVC pipe and fittings shall have bell and spigot push-on joints. The bell shall consist of an integral wall section with a solid cross-section elastomeric gasket securely locked in place to prevent displacement during assembly. Elastomeric gaskets shall conform to ASTM F477.

C. All fittings and accessories shall have bell and/or spigot configurations compatible with the pipe.

D. For Force Main, all pipe shall be C-900, DR-18 pipe or epoxy coated ductile iron encased with brown 8 mil. polyethylene film.

WW2.05 HANDLING AND CUTTING PIPE

A. Pipe and fittings are slightly brittle. Care shall be taken in shipping, handling and laying to avoid damaging the pipe and fittings. Extra care will be necessary during cold weather construction.

B. Any pipe or fitting showing a crack or which has received a blow that may have caused an incipient fracture, even though no such fracture can be seen, shall be marked as rejected and removed at once from the work.

C. All pipe ends shall be square after cutting.

D. While stored, pipe shall be adequately supported from below at not more than three (3) foot intervals to prevent deformation. Pipe shall not be stacked higher than six (6) feet. Pipe and fittings shall be stored in a manner which will keep them at ambient outdoor temperatures and out of direct sunlight. Temporary shading as required to meet this requirement shall be provided. Simple covering of the pipe and fittings which allows temperature buildup when exposed to direct sunlight will not be permitted.

WW2.06 JOINTING POLYVINYL CHLORIDE (PVC) WASTEWATER PIPE AND FITTINGS

A. PVC wastewater pipe and fittings shall be jointed in accordance with the recommendations of the latest ASTM Standards and detailed instructions of the Manufacturer.

B. All manhole connections shall be as shown on the Plans.

WW2.07 INSTALLING POLYVINYL CHLORIDE (PVC) PIPE AND FITTINGS

A. No single piece of pipe shall be laid unless it is generally straight. The centerline of the pipe shall not deviate from a straight line drawn between the centers of the openings at the ends of the pipe by more than $^{1}/_{16}$-inch per foot of length. If a piece of pipe fails to meet this requirement check for straightness, it shall be rejected and removed from the site. Laying instructions of the Manufacturer shall be explicitly followed.

B. Any pipe or fittings discovered to be defective after laying shall be removed and replaced with a sound piece.

C. The Engineer or the City may examine each bell and spigot end to determine whether any preformed joint has been damaged prior to installation. Any pipe having defective joint surfaces shall be rejected, marked as such, and immediately removed from the job site.

D. All pipe shall be sound and clean before laying. When laying is not in progress, including lunch time, the open ends of the pipe shall be closed by watertight plugs or other approved means.

E. Pipe and fittings shall be installed in accordance with the instructions of the Manufacturer, ASTM D2321 and as specified herein. As soon as the excavation is complete to normal grade of the bottom of the trench, bedding shall be placed, compacted and graded to provide firm, uniform and continuous support for the pipe. Bell holes shall be excavated so that only the barrel of the pipe bears upon the bedding. The pipe shall be laid accurately to the lines and grades indicated on the Plans. The specified embedment shall be accurately shaped and trimmed to receive the pipe barrel and each pipe section, when in place, shall have a uniform bearing on the subgrade for the full length of the pipe barrel. Pipe shall not be laid unless the subgrade is free of water and in a satisfactory condition. Adjustments of the pipe to line and grade shall be made by scraping away or filling in with granular material, and not by wedging or blocking up the bell. Blocking under the pipe will not be permitted. The bedding as shown in the details of the Plans, shall be placed evenly on each side of the pipe to mid-diameter and hand tools shall be used to force the bedding under the haunches of the pipe and into the bell holes to give firm continuous support for the pipe. The bedding shall then be placed to 12-inches above the top of the pipe. The initial three (3) feet of backfill above the bedding backfill shall be placed in eight (8) inch layers and carefully compacted. Generally, the compaction shall be done evenly on each side of the pipe and compaction equipment shall not be operated directly over the pipe until sufficient backfill has been placed to ensure that such compaction equipment will not have a damaging effect on the pipe. Equipment used in compacting the initial three (3) feet of backfill shall be approved by the pipe Manufacturer's representative prior to use.

F. Joints shall not be "pulled" or "cramped". Each joint of pipe shall be completed in compliance with Manufacturer’s recommendations.

G. Before any joint is made, the pipe shall be checked to assure that a close joint with the next adjoining pipe has been maintained and that the inverts are matched and conform to the required grade. The pipe shall not be driven down to grade by striking it.

H. Precautions shall be taken to prevent flotation of the pipe in the trench.

I. When moveable trench bracing such as trench boxes, moveable sheeting, shoring or plates are used to support the sides of the trench, care shall be taken in placing and moving the boxes or supporting bracing to prevent movement of the pipe, or disturbance of the pipe bedding and the backfill. Trench boxes, moveable sheeting, shoring or plates shall not be allowed to extend below mid-diameter of the pipe. As trench boxes, moveable sheeting, shoring or plates are moved, screened material shall be placed to fill any voids created and the screened material and backfill shall be re-compacted to provide uniform side support for the pipe.

J. Pipe stubs for manhole connections shall not exceed 3.25-feet in length unless directed otherwise by the Engineer or the City. Install caps where required. When connecting to an existing manhole, the opening for the connection of the wastewater pipe and the manhole shall be cored using an approved coring machine to the dimensions and size required to install the flexible "SEAL BOOT" resilient connector that meets the requirements of ASTM C-923. The connection shall be watertight when complete and meet the requirements of Section WW1- CONCRETE MANHOLES.

K. Wastewater mains shall be installed in straight trenches from manhole to manhole or manhole to cleanout. There will be no curvilinear installations of wastewater mains.

WW2.08 TESTING

A. Testing and cleaning of pipe shall be as specified in Specification Section CIP12- TESTING OF PIPELINES AND MANHOLES.

WW2.09 PAYMENT

A. The wastewater line, complete in place, will be measured for payment in linear feet along the centerline of the pipe actually installed. Measurement shall be through all manholes and no deduction in length will be made for such appurtenances. Installation of the wastewater line will be paid for at the unit contract price per linear foot as provided in the Proposal and Bid Schedule.

B. Payment of the unit contract price for the items of work performed shall be the total compensation for furnishing all labor, materials, tools, testing equipment and incidentals and performing all work that is necessary for the installation of the pipe, fittings, embedment or encasement, and all other appurtenances in accordance with the Plans and the provisions of these specifications.

END OF SECTION

TECHNICAL SPECIFICATIONS

SECTION WW3 – CONNECTIONS TO AND WORK ON THE EXISTING WASTEWATER SYSTEM

WW3.01 SCOPE OF WORK

A. This specification covers the requirements to maintain flow in existing sewers, handle existing wastewater flow, construct and maintain all temporary connections and diversions and construct the permanent connections to the new system as shown on the Plans and as directed by the Engineer.

WW3.02 SUBMITTALS

A. None required unless specifically called for in the Plans, details, or requested by the Engineer.

WW3.03 GENERAL

A. The Contractor shall supply all materials, equipment and labor required for plugging existing wastewater lines, all work on existing manholes (including all work and materials required to reshape existing manhole inverts with concrete and connecting new wastewater lines to existing manholes) and all additional work required.

B. Should damage of any kind occur to the existing wastewater line, the Contractor shall at his/her own expense, as part of the work under this Section, make repairs to the satisfaction of the Engineer.

C. The Contractor shall notify the Engineer immediately of any discrepancies in elevations of existing wastewater lines and manholes between those shown on the Plans and those established during construction in order that the Engineer can make the necessary modifications.

D. All new wastewater pipe for connection shall conform to the pipe specifications in Section WW2-POLYVINYL CHLORIDE (PVC) PIPE - WASTEWATER.

WW3.04 HANDLING WASTEWATER FLOWS

A. The Contractor shall provide all labor, equipment and materials necessary to maintain existing flows, including temporary diversions and all pumping of sewage that may be required to prevent backing up of wastewater lines and shall immediately remove all offensive matter at his/her own expense.

B. The Contractor shall not be permitted to overflow, bypass, pump or by any other means convey sewage to any stream, or other water course.

C. All procedures for maintaining flows must meet the approval of the Engineer and the Contractor shall be required to submit to the Engineer, for approval, a detailed written plan of all methods of flow maintenance 10 days in advance of flow interruption.

WW3.05 PAYMENT

A. No separate payment shall be made for work performed in accordance with this section of the specifications, and the cost thereof shall be included in the proper items of the Proposal and Bid Schedule.

END OF SECTION

WATER SPECIFICATIONS

SECTION W

TECHNICAL SPECIFICATIONS

SECTION W1 – DUCTILE IRON PIPE AND FITTINGS

W1.01 SCOPE OF WORK

A. This specification covers the requirements to furnish and install ductile iron pipe and ductile iron pipe fittings including bracing, pipe laying, jointing, testing, blocking, and any other work that is required or necessary to complete the installation as shown on the Plans and as specified herein.

W1.02 SUBMITTALS

A. Within 30 days of the Notice to Proceed, the Contractor shall submit to the Engineer for approval, technical product literature including the name of the pipe and fitting suppliers and a list of materials to be furnished, completely detailed working drawings and schedules of all ductile-iron pipe and fittings required, prior to each shipment of pipe, submit certified test reports that the pipe for this Contract was manufactured and tested in accordance with the ASTM and ANSI/AWWA Standards specified herein.

W1.03 REFERENCE STANDARDS

A. American Society for Testing and Materials (ASTM)

1. ASTM A307 - Standard Specification for Carbon Steel Bolts and Studs 60,000 PSI Tensile Strength.

B. American Water Works Association (AWWA)

1. AWWA C104 - Cement-Mortar Lining for Ductile-Iron Pressure Pipe and Fittings.

2. AWWA C105 - Polyethylene Encasement for Ductile-Iron Piping for Water and Other Liquids.

3. AWWA C110 - Ductile-Iron and Gray-Iron Fittings, 3-inch Through 48-in for Water and Other Liquids.

4. AWWA C111 - Rubber-Gasket Joints for Ductile-Iron Pressure Pipe and Fittings.

5. AWWA C115 - Standard for Flanged Ductile-Iron Pipe with Threaded Flanges.

6. AWWA C151 - Ductile-Iron Pipe, Centrifugally Cast in Metal Molds or Sand-Lined Molds for Water or Other Liquids.

7. AWWA C153 - Ductile-Iron Compact Fittings, 3-inch Through 16-inch for Water and Other Liquids.

8. AWWA C600 - Standard for Installation of Ductile-Iron Water Mains and Their Appurtenances.

9. AWWA C651 - Disinfection Water Mains

C. American National Standards Institute (ANSI)

1. ANSI B16.1 - Cast Iron Pipe Flanges and Flanged Fittings.

D. Where reference is made to one of the above standards, the revision in effect at the time of bid opening shall apply.

W1.04 QUALITY ASSURANCE

A. All ductile-iron pipe and fittings shall be from a single Manufacturer. All ductile-iron pipe to be installed under this Contract may be inspected at the foundry for compliance with these Specifications by an independent testing laboratory provided by the City. The Contractor shall require the Manufacturer's cooperation in these inspections. The cost of foundry inspection of all pipe approved for this Contract, plus the cost of inspection of disapproved pipe will be borne by the Contractor.

B. Inspection of the pipe will be made by the Engineer or other representatives of the City after delivery. The pipe shall be subject to rejection at any time on account of failure to meet any of the Specification requirements, even though pipes may have been accepted as satisfactory at the place of manufacture. Pipe rejected after delivery shall be marked for identification and shall immediately be removed from the job.

W1.05 MATERIALS

A. Ductile iron pipe shall conform to AWWA C151, be manufactured from metal having a minimum tensile strength of 60,000 psi, a minimum yield strength of 42,000 psi, and a minimum elongation of 10 percent (60–42–10), and be provided in the following minimum pressure classes:

1. 12-inch and smaller, Class 350.
2. 14-inch through 20-inch, Class 250.
3. 24-inch, Class 200.
4. 30-inch and larger, Class 150.

B. Ductile iron fittings shall conform to AWWA C110 or C153.

C. All pipe and fittings shall have a bituminous outside coating in accordance with AWWA C151 and C110, respectively. All pipe and fittings shall be cement-mortar lined and seal coated in accordance with AWWA C104. Cement mortar lining shall be double thickness.

D. Ductile iron pipe with push-on or mechanical joints shall be centrifugally cast pipe in accordance with AWWA C150 and C151.

E. Restrained joints shall be restrained push-on joints, TR Flex by U.S. Pipe and Foundry; Lok-Fast by American Cast Iron Pipe Company, or equal. Joints shall be suitable for 250 psi working pressure and be fabricated of heavy section ductile iron casting. Bolts and nuts shall be low carbon steel conforming to ASTM A307, Grade B.

F. Sleeve type couplings shall be of steel and shall be Style 38 by Dresser Manufacturing Division, Smith-Blair or equal. Couplings shall be furnished with black steel bolts and nuts and with pipe stop removed. Gaskets shall be of a material suitable for exposure to liquid within the pipe.

W1.06 POLYETHYLENE ENCASEMENT

A. All buried ductile iron pipe and metallic fittings shall be encased with 8 mil, Type I, Grade E-1, polyethylene film conforming to AWWA C105. Class usage shall be:

1. Class A - Natural Color where exposure to weather (including sunlight) is less than 48 hours total before burial.
2. Class C - Black where exposure to weather (including sunlight) may be more than 48 hours.

B. Exposure to weather shall be kept to a minimum, and in no case shall it exceed 10 days. The Class of polyethylene used shall be approved by the Engineer.

C. Polyethylene encasement shall not be paid for separately, but the cost there of shall be included in he appropriate item of the Proposal and Bid Schedule.

W1.07 LAYING DUCTILE IRON PIPE AND FITTINGS

A. Care shall be taken in loading, transporting and unloading to prevent injury to the pipe, lining or coatings. Pipe or fittings shall not be dropped. All pipe or fittings shall be examined before laying and no piece shall be installed which is found to be defective. Any damage to the pipe linings or coatings shall be repaired as directed by the Engineer. Handling and laying of pipe and fittings shall be in accordance with the Manufacturer's instruction and as specified herein.

B. All pipe and fittings shall be thoroughly cleaned before laying, shall be kept clean until they are used in the work, and when laid, shall conform to the lines and grades required. Pipe shall not be laid unless the subgrade is free of water and in a satisfactory condition. Ductile iron pipe and fittings shall be installed in accordance with the requirements of AWWA C600 except as otherwise provided herein. All piping on this project regardless of size or class shall be placed in the embedment as shown on the detail sheets in the Plans. If any defective pipe is discovered after it has been laid, it shall be removed and replaced with a sound pipe in a satisfactory manner by the Contractor, at his own expense.

C. All pipe shall be sound and clean before laying. When laying is not in progress, including lunchtime, the open ends of the pipe shall be closed by watertight plugs or other approved means. Good alignment shall be preserved in laying. The deflection at joints shall not exceed that recommended by the Manufacturer. Fittings, in addition to those shown on the Plans, shall be provided, if required, for crossing utilities which may be encountered upon opening the trench. Solid sleeves shall be used only where approved by the Engineer and the City.

D. When cutting pipe is required, the cutting shall be done by machine, leaving a smooth cut at right angles to the axis of the pipe. Cut ends of pipe to be joined with a bell shall be beveled to conform to the manufactured spigot end. Cement lining shall be undamaged.

E. Joints shall be protected by eight (8) mil. Polyethylene film prior to placing concrete. Concrete shall be placed against undisturbed material, and shall not cover joints, bolts or nuts, or interfere with the removal of any joint.

W1.08 PUSH-ON JOINTS

A. Push-on joints shall be made in accordance with AWWA C111 and the Manufacturer’s instructions. Pipe shall be laid with bell ends in the direction of trenching. A rubber gasket shall be inserted in the groove of the bell end of the pipe, and the joint surfaces cleaned and lubricated. The plain end of the pipe to be laid shall then be aligned and inserted in the bell of the pipe to which it is to be joined and pushed home with a jack or by other means. After joining the pipe, a metal feeler shall be used to make certain that the rubber gasket is correctly located.

W1.09 MECHANICAL JOINTS

A. Mechanical joints shall be made in accordance with Appendix “A” of AWWA C111 and the Manufacturer's instructions. Thoroughly clean and lubricate the joint surfaces and rubber gasket with soapy water before assembly. Bolts shall be tightened to the specified torque. Under no conditions shall extension wrenches or pipe over the handle of ordinary ratchet wrench be used to secure greater leverage.

W1.10 RESTRAINED JOINTS

A. Restrained joints shall be installed where shown on the Plans. The joint assemblies shall be made in accordance with the Manufacturer's recommendations.

W1.11 SLEEVE TYPE COUPLINGS

A. Couplings shall be installed where shown on the Plans. Couplings shall not be assembled until adjoining push-on joints have been assembled. After installation, apply a heavy bitumastic coating to bolts and nuts.

W1.12 POLYETHYLENE ENCASEMENT

A. The polyethylene encasement shall be installed in accordance with either method specified in AWWA C105.

W1.13 CONCRETE AND BLOCKING

A. 2,500 psi concrete shall be placed for blocking at each change in direction in the pipeline, in such manner as will substantially brace the pipe against undisturbed trench walls. Concrete blocking, made from Type I cement, shall have been in place four (4) days prior to testing the pipeline as hereinafter specified. Test may be made in two (2) days after completion of blocking if Type III cement is used.

B. At all points where wet connections are made to existing lines, the existing lines shall be adequately blocked and the tapping connection fittings shall be supported by blocking up to the spring line with 2,500 psi concrete.

C. Concrete blocking will not be measured or paid for as a separate item but the cost thereof shall be included in the proper items listed in the Proposal and Bid Schedule.

W1.14 CLEANING

A. At the conclusion of the work thoroughly clean all of the new pipelines by flushing with water or other means to remove all dirt, stones, pieces of wood or other material which may have entered during the construction period. If obstructions remain after this cleaning, the obstructions shall be removed.

W1.15 CONNECTIONS AND APPURTENANCES

A. The Contractor shall make the alterations and the necessary connections to existing water mains as shown on the Plans. Such connection shall be made at such time and in a manner approved by the City; in each case, when the work is started, it shall be prosecuted expeditiously and continuously until completed.

B. Fittings, bends, plugs and valves and shall be of standard manufacture and mechanical joint type to fit AWWA pipe specifications in Classes A, B, C and D, unless otherwise shown on the Plans.

C. Payment for fittings and gate valves shall be restrained and shall be made separately under the appropriate bid items listed in the Proposal and Bid Schedule.

W1.16 LEAKAGE TESTING AND STERILIZATION

A. All Ductile Iron Pipe shall be leak tested and sterilized according to Section CIP12 – TESTING OF PIPELINES.

W1.17 PAYMENT

A. The pipeline, complete in place, including cleanup, will be measured for payment in linear feet along the centerline of the pipe actually installed. Measurement shall be through all fittings, specials, valves, etc., and no deduction in length shall be made for such appurtenances. Installation of the pipeline will be paid for at the unit contract price per linear foot as provided in the Proposal and Bid Schedule.

B. Payment of the unit contract price for the items of work performed shall be the total compensation for furnishing all labor, materials, tools, equipment and incidentals and performing all work that is necessary for the installation, testing, and sterilization of the pipe, fittings, connections, blocking, embedment or placing in encasement pipe and all other appurtenances in accordance with the Plans and the provisions of the Specifications.

END OF SECTION

SECTION W2 – POLYVINYL CHLORIDE (PVC) PIPE-WATER

W2.01 SCOPE OF WORK

A. This specification covers the requirements to install polyvinyl chloride (PVC) water pipe and ductile iron fittings for the water line, including excavation, sheeting, shoring, dewatering, pipe laying, jointing, testing, backfilling and any other work that is required or necessary to complete the installation as shown on the Plans and as specified herein.

W2.02 SUBMITTALS

A. Within 30 days of the Notice to Proceed, the Contractor shall submit to the Engineer or the City for approval, technical product literature including the name of the pipe and fittings suppliers, a list of materials to be furnished, shop drawings and schedules of all PVC pipe and fittings required, prior to each shipment of pipe, submit certified test reports that the pipe for this Contract was Manufactured and tested in accordance with the ASTM Standards specified herein.

W2.03 QUALITY ASSURANCE

A. All PVC pipe and fittings shall be from a single Manufacturer. The supplier shall be responsible for the provisions of all test requirements specified in ASTM D3034 or ASTM F789 and/or ASTM F758 as applicable. In addition, all PVC pipe to be installed under this Contract may be inspected at the plant for compliance with these specifications by an independent testing laboratory provided by the City. The Contractor shall require the Manufacturer's cooperation in these inspections. The cost of plant inspection of all pipe approved for this Contract, plus the cost of inspection of disapproved pipe, will be borne by the Contractor.

B. Inspections of the pipe may also be made by the Engineer or other representatives of the City after delivery. The pipe shall be subject to rejection at any time on account of failure to meet any of the Specification requirements, even though sample pipes may have been accepted as satisfactory at the place of manufacture. Pipe rejected after delivery shall be marked for identification and shall be removed from the job at once.

W2.04 POLYVINYL CHLORIDE (PVC) PIPE AND FITTINGS

A. Polyvinyl chloride pipe for water lines, unless otherwise specifically shown on the Plans, or approved in writing, shall be AWWA C900, C905, or C909 Class 150 psi with a dimension ratio of 18 (DR-18), for water lines and shall be extruded, be of rubber gasket type, and be furnished in 20-foot nominal laying lengths. All such pipe shall bear a mark denoting approval by the Underwriters' Laboratories of Chicago, Illinois, so that it will be acceptable to the Texas State Fire Insurance Commission for use in fire protection lines without penalty. All joints shall be of the type which provides a recession in the bell for the employment of a single rubber gasket to be placed before the insertion of the succeeding spigot. Each size of polyvinyl chloride pipe shall have the same outside diameter as the corresponding size of cast iron pipe.

B. Fittings shall be ductile iron, mechanical joint or flanged type and shall be Class 250 in accordance with AWWA Specifications C110-77, C-111-80, and C115-75. Flanges shall be faced and drilled in accordance with ASA Standard B16.1, Class 125 unless otherwise shown on the Plans or in the Special Conditions. All fittings shall be tar coated on the outside surface and shall have an interior cement lining with seal coat per AWWA Specifications C104-80 unless otherwise shown or specified.

C. The Contractor shall obtain installation instructions, including support spacing and solvent welding, from the supplying Manufacturer, shall comply with the instructions, and shall meet the requirements of ASTM D-2855, Standard Recommended Practice for making Solvent Cemented Joints with PVC Pipe and Fittings. The PVC solvent cement shall comply with ASTM D-2564 and shall be furnished by the pipe and fitting Manufacturer for the class and type of pipe supplied to the project.

W2.05 HANDLING AND CUTTING PIPE

A. Pipe and fittings are slightly brittle. Care shall be taken in shipping, handling and laying to avoid damaging the pipe and fittings. Extra care will be necessary during cold weather construction.

B. Any pipe or fitting showing a crack or which has received a blow that may have caused an incipient fracture, even though no such fracture can be seen, shall be marked as rejected and removed at once from the work.

C. All pipe ends shall be square after cutting.

D. While stored, pipe shall be adequately supported from below at not more than three (3) foot intervals to prevent deformation. Pipe shall not be stacked higher than six (6) feet. Pipe and fittings shall be stored in a manner which will keep them at ambient outdoor temperatures and out of direct sunlight. Temporary shading as required to meet this requirement shall be provided. Simple covering of the pipe and fittings which allows temperature buildup when exposed to direct sunlight will not be permitted.

W2.06 JOINTING POLYVINYL CHLORIDE (PVC) PIPE AND FITTINGS

A. PVC pipe and fittings shall be jointed in accordance with the recommendations of the latest ASTM Standards and detailed instructions of the Manufacturer.

W2.07 INSTALLING POLYVINYL CHLORIDE (PVC) PIPE AND FITTINGS

A. Unless otherwise specified on the Plans, polyvinyl chloride pipe shall be installed to clear all utility lines and shall have three (3) feet minimum cover. For water lines to be constructed under a future roadway, the cover may be increased to allow for future paving grades. The depth of cover, where shown on the Plans, is that distance from the top of the pipe to the approximate proposed grade line.

B. No single piece of pipe shall be laid unless it is generally straight. The centerline of the pipe shall not deviate from a straight line drawn between the centers of the openings at the ends of the pipe by more than $^{1}/_{16}$-inch per foot of length. If a piece of pipe fails to meet this requirement check for straightness, it shall be rejected and removed from the site. Laying instructions of the Manufacturer shall be explicitly followed.

C. Any pipe or fittings discovered to be defective after laying shall be removed and replaced with a sound piece.

D. The Engineer or the City may examine each bell and spigot end to determine whether any preformed joint has been damaged prior to installation. Any pipe having defective joint surfaces shall be rejected, marked as such, and immediately removed from the job site.

E. All pipe shall be sound and clean before laying. When laying is not in progress, including lunch time, the open ends of the pipe shall be closed by watertight plugs or other approved means. Good alignment shall be preserved in laying.

F. Pipe and fittings shall be installed in accordance with the instructions of the Manufacturer, ASTM D2321 and as specified herein. As soon as the excavation is complete to normal grade of the bottom of the trench, embedment material shall be placed, compacted and graded to provide firm, uniform and continuous support for the pipe. Bell holes shall be excavated so that only the barrel of the pipe bears upon the bedding. The pipe shall be laid accurately to the lines and grades indicated on the Plans. The specified embedment shall be accurately shaped and trimmed to receive the pipe barrel and each pipe section, when in place, shall have a uniform bearing on the subgrade for the full length of the pipe barrel. Pipe shall not be laid unless the subgrade is free of water and in a satisfactory condition. Embedment material shall be placed evenly on each side of the pipe to mid-diameter and hand tools shall be used to force the embedment material under the haunches of the pipe and into the bell holes to give firm continuous support for the pipe. Embedment material shall then be placed to 12-inches above the top of the pipe. Next, the varying depths of select material backfill above the embedment material backfill shall be placed according to the Plan Details and carefully compacted. Generally, the compaction shall be done evenly on each side of the pipe and compaction equipment shall not be operated directly over the

pipe until sufficient select material backfill has been placed to ensure that such compaction equipment will not have a damaging effect on the pipe. Equipment used in compacting the varying depths of select material backfill shall be approved by the pipe Manufacturer's representative prior to use. Adjustments of the pipe to line and grade shall be made by scraping away or filling in with granular material, and not by wedging or blocking up the bell.

G. Perforated PVC Pipe and fittings shall be installed in accordance with the instructions of the Manufacturer, ASTM F758 and as specified herein. As soon as the excavation for the trench is complete to normal grade of the bottom of the trench, geotextile fabric shall be laid and then the pea gravel bedding shall be carefully placed (so not to damage the geotextile fabric) and graded to provide uniform and continuous support for the pipe. Bell holes shall be excavated so that only the barrel of the pipe bears upon the bedding. Before the perforated pipe is laid on the trench, the perforated pipe shall be wrapped around and closed according to the Manufacturer's closure recommendations with the geotextile fabric. The pipe shall be laid accurately to the lines and grades indicated on the Plans. Blocking under the perforated PVC pipe will not be permitted. Pea gravel shall be placed evenly on each side of the pipe to mid-diameter and hand tools shall be used to gently place the pea gravel under the haunches of the pipe and into the bell holes to give firm continuous support for the pipe. Making sure not to damage the geotextile fabric, pea gravel shall then be carefully placed above the top of the perforated pipe varying from two to three (2-3) feet depending on the Plans. Once the remaining pea gravel has been placed, overlap or close the geotextile fabric according to the Manufacturer's recommendations or six (6) inches minimum overlap. Then one (1) foot of topsoil shall be placed over the pea gravel to the ground level with proper grass sodding on top.

H. Joints shall not be "pulled" or "cramped". Each joint of pipe shall be completed in compliance with Manufacturer's recommendations.

I. Before any joint is made, the pipe shall be checked to assure that a close joint with the next adjoining pipe has been maintained and that the inverts are matched and conform to the required grade. The pipe shall not be driven down to grade by striking it.

J. Precautions shall be taken to prevent flotation of the pipe in the trench.

K. When moveable trench bracing such as trench boxes, moveable sheeting, shoring or plates are used to support the sides of the trench, care shall be taken in placing and moving the boxes or supporting bracing to prevent movement of the pipe, or disturbance of the pipe bedding and backfill or embedment material. Trench boxes, moveable sheeting, shoring or plates shall not be allowed to extend below mid-diameter of the pipe. As trench boxes, moveable sheeting, shoring or plates are moved, embedment material shall be placed to fill any voids created and the embedment material and backfill shall be recompacted to provide uniform side support for the pipe.

W2.08 CONCRETE AND BLOCKING

A. 2,500 psi concrete shall be placed for blocking at each change in direction in the pipeline, as shown in the Standard Details and in such manner as will substantially brace the pipe against undisturbed trench walls. In no event shall this quantity of concrete blocking be less than those shown in the Plans. Concrete blocking, made from Type I cement, shall have been in place four (4) days prior to testing the pipeline as hereinafter specified. Tests may be made in two (2) days after completion of blocking if Type III cement is used.

B. At all points where wet connections are made to existing lines, the existing lines shall be adequately blocked and the tapping connection fittings shall be supported by blocking up to the spring line with 2,500 psi concrete.

C. Concrete blocking will not be measured or paid for as a separate item but the cost thereof shall be included in the various items listed in the Proposal and Bid Schedule.

W2.09 TESTING AND ALLOWABLE LEAKAGE

A. All PVC pipe and fittings shall be leak tested and sterilized according to Section CIP12.05- TEST PROCEDURES FOR PRESSURE PIPELINES.

W2.10 PAYMENT

A. The pipeline, complete in place, including cleanup, will be measured for payment in linear feet along the centerline of the pipe actually installed. Measurement shall be through all fittings, specials, valves, etc., and no deduction in length shall be made for such appurtenances. Installation of the pipeline will be paid for at the unit contract price per linear foot as provided in the Proposal and Bid Schedule.

B. Payment of the unit contract price for the items of work performed shall be the total compensation for furnishing all labor, materials, tools, equipment and incidentals and performing all work that is necessary for the installation, testing, and sterilization of the pipe, fittings, connections, blocking, embedment or placing in encasement pipe and all other appurtenances in accordance with the Plans and the provisions of the Specifications.

END OF SECTION

TECHNICAL SPECIFICATIONS

SECTION W3 – VALVES, HYDRANTS AND APPURTENANCES

W3.01 SCOPE OF WORK

A. This specification covers the requirements to provide all buried valves, valves in manholes and underground vaults, hydrants and appurtenances complete with actuators and all accessories as shown on the Plans and as specified herein.

W3.02 SUBMITTALS

A. Within 30 days of the Notice to Proceed, the Contractor shall submit to the Engineer or the City for approval, technical product literature including Manufacturer's literature, illustrations, specifications and engineering data which includes dimensions, size, materials of construction, weight, protection coating, and all other pertinent data to illustrate conformance to the specification found within. The Contractor shall also submit four (4) copies of all certified shop test results specified herein, complete operation and maintenance manuals including all copies of all approved shop drawings, and certificates of compliance where required by referenced standards: For each valve specified to be manufactured and/or installed in accordance with AWWA and other standards, submit an affidavit of compliance with the appropriate standards, including certified results of required tests, and certification of proper installation.

W3.03 REFERENCE STANDARDS

A. Comply with applicable provisions and recommendations of the following, except as otherwise shown or specified.

B. American Water Works Association (AWWA)

1. AWWA C515 - Gate Valves, three (3)-inch through 48-inch NPS, for Water and Sewage Systems.

2. AWWA C502 - Dry-Barrel Fire Hydrants.

3. AWWA C509 - Resilient-Seated Gate Valves, three (3) inch through 12-inch NPS, for Water and Sewage Systems.

C. American National Standards Institute (ANSI)

1. ANSI B16.1 - Cast-Iron Pipe Flanges and Flanged Fittings.

2. ANSI C111 - Rubber-Gasket Joints for Ductile-Iron and Gray-Iron Pressure Pipe and Fittings.

D. American Society for Testing and Materials (ASTM)

1. ASTM A48 - Gray Iron Castings.

2. ASTM A126 - Gray Iron Castings for Valves, Flanges and Pipe Fittings

3. ASTM A153 - Zinc Coating (Hot-Dip) on Iron and Steel Hardware

4. ASTM A276 - Standard Specification for Stainless and Heat Resisting Steel Bars and Shapes.

5. ASTM A536 - Ductile Iron Castings.

E. Steel Structures Painting Council (SSPC)

1. SSPC SP-6 - Commercial Blast Cleaning

F. Where reference is made to one (1) of the above standards, the revision in effect at the time of bid opening shall apply.

W3.04 DELIVERY, STORAGE AND HANDLING

A. Deliver materials to the site to ensure uninterrupted progress of the work.

B. Protect threads and seats from corrosion and damage. Rising stems and exposed stem valves shall be coated with a protective oil film which shall be maintained until time of use.

C. Provide covers for all openings.

1. All valves three (3) inches and larger shall be shipped and stored on site until time of use with wood or plywood covers on each valve end.

2. All valves smaller than three (3) inches shall be shipped and stored as above except that heavy card board covers may be furnished instead of wood.

D. Store equipment to permit easy access for inspection and identification. Any corrosion in evidence at the time of City acceptance shall be removed, or the valve shall be removed from the job.

E. Store all equipment in covered storage off the ground.

W3.05 COORDINATION

A. Review installation procedures under other Sections and coordinate with the work which is related to this Section including buried piping installation and site utilities.

B. Contractor shall coordinate the location and placement of concrete thrust blocks when required.

W3.06 GENERAL

A. All valves shall open counter-clockwise.

B. The use of a Manufacturer's name and/or model or catalog number is for the purpose of establishing the standard of quality and general configuration desired.

C. Valves shall be of the size shown on the Plans or as noted, and as far as possible equipment of the same type shall be identical and from one Manufacturer.

D. Valves shall have the name of the maker, nominal size, flow directional arrows, working pressure for which they are designed and standard to which they are manufactured cast in raised letters on some appropriate part of the body.

E. Unless otherwise noted, valves shall have a minimum working pressure of 200 psi or be of the same working pressure as the pipe they connect to, whichever is higher, and suitable for the pressures noted where they are installed.

F. Valves shall be of the same nominal diameter as the pipe or fittings they are connected to. Except as otherwise noted, joints shall be mechanical joints, with joint restraint where the adjacent piping is required to be restrained.

G. Valves shall be constructed for buried service.

W3.07 VALVE BOXES

A. All gate valves shall be provided with extension shafts (where the operating nut is greater than five (5) feet below grade), operating nuts and valve boxes as follows:

1. Extension shafts shall be steel and the operating nut shall be two (2) inches square. Shafts shall be designed to provide a factor of safety of not less than four (4). Operating nuts shall be pinned to the shafts.

2. Valve boxes shall be a heavy-pattern cast iron, three (3) piece, telescoping type box with dome base suitable for installation on the buried valves. Inside diameter shall be at least 5¼-inches. Barrel length shall be adapted to the depth of cover, with a lap of at least six (6) inches when in the most extended position. Covers shall be cast iron with integrally-cast direction-to-open arrow and "WATER" shall be cast in the cover when used on a water line or "SEWER" when used on a wastewater force main. Aluminum or plastic are not acceptable. A means of lateral support for the valve extension shafts shall be provided in the top portion of the valve box. The valve box lid shall be furnished with a pentagon-head bolt for locking.

3. The upper section of each box shall have a bottom flange of sufficient bearing area to prevent settling. The bottom of the lower section shall enclose the stuffing box and operating nut of the valve and shall be oval.

4. An approved operating key or wrench shall be provided.

5. All fasteners shall be Type 304 stainless steel.

W3.08 RESILIENT SEATED GATE VALVES

A. Valves shall be manufactured in accordance with AWWA C509.

Acceptable Gate Valves are:

1. American Flow Control – Series 2500
2. Mueller – 2360 Series
3. Clow

B. Valves shall be provided with a minimum of two (2) O-ring stem seals.

C. Bonnet and gland bolts and nuts shall be either fabricated from a low alloy-steel for corrosion resistance or electroplated with zinc or cadmium. The hot-dip process in accordance with ASTM A153 is not acceptable.

D. Wedges shall be totally encapsulated with rubber.

E. Units shall be, in addition, UL and FM approved.

F. Resilient wedge gate valves shall be furnished and installed in sizes and shall be manufactured in accordance with the latest AWWA C-509 and cast iron shall conform to the latest ASTM A-126 standards. Gate valves furnished under these specifications shall be of the solid wedge, resilient seat type with cast iron/ductile iron body and bronze stem designed for 250 pounds per square inch working pressure. All gate valves shall be tested hydrostatically to 400 pounds per square inch. Gate valves shall meet the latest AWWA standard specifications (C-509).

G. The seat shall be made of Styrene Butadiene rubber and provide a positive water tight seal. The seat shall be permanently bonded or mechanically attached to the wedge with stainless steel screws. If bonded, ASTM P-429 requirements shall be followed. Non-rising stem gate valves shall be equipped with "O" ring type packing gland consisting of at least two (2) "O" rings. The thrust collar shall work in an "O" ring seal lubricant reservoir or against bearings or washers, above and below constructed of Delrin or approved equal material. Gate valve stems, shall be fabricated from solid bronze rod having a tensile strength of not less than 60,000 pounds per square inch, and a minimum yield strength of 30,000 pounds per square inch.

H. Cast iron body shall be of iron with an even grain and shall possess a tensile strength of not less than 32,000 pounds per square inch. All bronze castings, except the stem, shall have a tensile strength of not less than 30,000 pounds per square inch. The entire internal valve body surfaces shall be coated with a factory applied two (2) component epoxy system or approved equal. The seating surface shall be machined or otherwise constructed to provide a smooth, even surface for the resilient seat. All valves shall open left (counter clockwise) and have a two (2) inch square wrench nut unless specified otherwise.

W3.09 TAPPING SLEEVES AND TAPPING VALVES

A. Tapping sleeves shall be of cast iron epoxy coated, designated for working pressure not less than 200 psi. Armored end gaskets shall be provided for the full area of the sleeve flanges. Sleeves shall be as manufactured by A.P. Smith Division of U.S. Pipe, Mueller, Clow, or equal. Nuts and bolts shall be Type 304 stainless steel.

B. Size-on-Size tapping sleeve shall be ductile iron or cast iron.

C. Tapping valves shall conform to the requirements specified above for gate valves except that one (1) end shall be flanged and one (1) mechanical. Tapping valves shall be provided with an oversized opening to permit the use of full size cutters. Tapping valves shall be Ford B81-777 or equal.

W3.10 CHECK VALVES

A. Controlled Closing Swing Check Valves (lever & weight)

1. Check valves shall be of the controlled closing swing type. The controlled closing swing check valves shall be guaranteed to operate under severe conditions as check valves. The valve shall be designed to open smoothly, provide full pipe line flow, permit minimum head loss and close at a controlled rate of speed for the final predetermined portion of its stroke. All bolts and nuts used in the assembly shall be steel, commercial.

2. The valve body shall be Cast Iron ASTM A126-B/ductile iron ASTM A536. The disc arm and chamber level shall be of heavy steel construction and keyed to the hinge shaft. The hinge shaft shall be of 18-8 stainless steel and of adequate diameter to withstand a complete hydraulic unbalance pressure of 125 psi on the valve disc. A single cushioning device mounted on the external side of the valve shall control the valve closure by way of the interchange of oil to and from an oil reservoir. The use of air or gas pressurized oil reservoir shall not be permitted. The oil plunger assembly shall be rigidly attached to the valve body by shoulder bolts or dowel pins to prevent fretting.

3. The Manufacturer, if required by the Engineer or the City, shall submit design calculations of principle component stresses to substantiate the integrity of the valve for the working pressure involved.

4. The valve when closed shall be tight seating by way of a resilient replaceable seat against a bronze seat ring in the body.

5. Valves shall be as manufactured by GA Industries or Series 6000 as manufactured by APCO. The City reserves the right to inspect all valves before shipment is made. Any failure of valves to operate satisfactorily during the first year of installation due to faulty workmanship or defective material shall be replaced and made good by the Manufacturer. Under these specifications, any valve stuffing box that leaks for any reason or because of excessive wear or deterioration of packing, shall be reason for classification as defective material.

B. Slanted / Tilted Check Valves

1. Slanted or tilted check valves shall be furnished and installed where shown on the Plans.

2. The body of the valve shall be ductile iron or cast iron with access ports to the disc. The disc shall be cast iron. The seat and disc rings shall be bronze. Pivot pins and bushings shall be bronze or stainless steel. The valve shall include a localized indicator of the position of the valve.

3. The valves shall include a top mounted oil dash pot to prevent slamming of the disc. The dash pot shall control the last 10% of closure of the disc. The speed of closure within this 10% shall be adjustable.

4. Valves shall be APCO Slanting Disc, Valmatic or Golden Anderson Tilted Disc or approved equal.

W3.11 FLANGES

A. Flanges shall be cast solid and faced accurately at right angles to the axis of the casting. Dimensions and drilling of flanges shall be in accordance with the American Standard Association for a working pressure of 125 pounds per square inch. Special drilling shall be provided where necessary.

W3.12 FIRE HYDRANTS

A. Fire hydrants shall be dry-barrel type conforming to the requirements of the latest revision of AWWA C502. Hydrants shall be designed such that the hydrant valve closes with line pressure preventing loss of water and consequent flooding in the event of traffic damage.

B. Hydrants shall have six (6)-inch mechanical joint inlet connections, two 2½-inch hose connections and one $4^1/_2$-inch pumper connection. Threads for the hose and pumper connections shall be in accordance with National Standard Thread. Hydrants shall be according to Manufacturer's standard pattern. Hydrants shall be equipped with "O" ring packing. Each nozzle cap shall be provided with a Buna-N rubber washer.

C. Hydrants shall be so arranged that the direction of outlets may be turned 90 degrees without interference with the drip mechanism or obstructing the discharge from any outlet. The body of the hydrant shall be equipped with a breakable flange, or breakable cast iron flange bolts, just above the grade line.

D. A bronze or rustproof steel nut and check nut shall be provided to hold the main hydrant valve on its stem.

E. Hydrant valve opening shall have an area at least equal to that area of a $4^1/_2$-inch minimum diameter circle and be obstructed only by the valve rod. Each hydrant shall be able to deliver 500 gallons minimum through its two 2½-inch hose nozzles when opened together with a loss of not more than two (2) psi in the hydrant.

F. Hydrants shall be designed for installation in a trench that will provide minimum cover as noted on Plans and for the flange to be $3\ ^1/_2$-inches above ground surface. Hydrant extensions shall be as manufactured by the company furnishing the hydrants and of a style appropriate for the hydrants as furnished.

G. Hydrants shall be provided with an automatic and positively operating, non-corrodible drain or drip valve so as to drain the hydrant completely when the main valve is shut. A drain valve operating by

springs or gravity is not acceptable.

H. Operating stems whose threads are located in the barrel or waterway shall be of manganese bronze, everdur, or other high-quality non-corrodible metal, and all working parts in the waterway shall be bronze to bronze.

I. Hydrants shall open by turning operating nut to left (counter-clockwise) and shall be marked with a raised arrow and the word "open" to indicate the direction to turn stem to open hydrant.

J. Hydrants shall be furnished with caps, double galvanized steel hose cap chain, galvanized steel pumper hose cap chain, a galvanized steel chain holder and any other hooks and/or appurtenances required for proper use.

K. Hydrant operating nut shall be AWWA Standard pentagonal type measuring 1½-inch point to flat.

L. Hydrants shall be hydrostatically tested as specified in AWWA C502.

M. Hydrants shall be of the following:

1. Kennedy – K81

3. American Darling – B84B

2. Clow Medallion

N. All iron work to be set below ground, after being thoroughly cleaned, shall be painted with two (2) coats of asphalt varnish specified in AWWA C502. Iron work to be left above ground shall be factory primed and painted silver using a high grade enamel paint of quality and color to correspond to the present standard of the City.

O. Fire hydrants shall be installed on the same side of the street or roadway as the water main and shall be installed plumb and true.

P. Heel and thrust blocks shall be placed in undisturbed soil as shown in the details of the Plans.

Q. Double blue reflector "HYE – LITES" brand as manufactured by pavement markers ink shall be installed at the centerline of the street or roadway perpendicular to the hydrant.

W3.13 CORPORATION STOPS

A. Corporation stops shall be brass, not less than 1-inch in diameter and shall be installed where shown, specified or required.

B. Provide corporation stops as manufactured by the following:

1. Ford Company

W3.14 COMBINATION AIR-VACUUM RELIEF VALVES

A. The air-vacuum release valves shall be installed as shown on the Plans. The valve body shall be of cast iron ASTM A126-B; the floats, float guide, and stem shall be of Type 316 stainless steel. The resilient seat shall be of Buna N. The valve shall be suitable for 150 psig working pressure. Valve shall have standard NPT inlets and outlet ports with diameters as indicated on the Plans. Valve shall be Model 200A Series by APCO Valve and Primer Corporation, Schaumburg, IL, or approved equal.

W3.15 SURFACE PREPARATION AND SHOP COATINGS

A. The interior ferrous metal surfaces, except finished or bearing surfaces, shall be blast cleaned in accordance with SSPC SP-6 and painted with two (2) coats of an approved two (2) component coal tar

epoxy coating specifically formulated for potable water use. The coating used must appear on the current edition of the United States Environmental Protection Agency's list entitled "Accepted Categories and Subcategories of Coatings, Liners and Paints for Potable Water Usage."

B. Exterior ferrous metal surfaces of all buried valves and hydrants shall be blast cleaned in accordance with SSPC SP-6 and given two (2) shop coats of a heavy coat tar enamel or an approved two (2) component coat tar epoxy paint.

W3.16 INSPECTION AND PREPARATION

A. During installation of all valves and appurtenances, the Contractor shall verify that all items are clean, free of defects in material and workmanship and function properly.

B. All valves shall be closed and kept closed until otherwise directed by the Engineer or the City.

W3.17 INSTALLATION OF BURIED VALVES AND VALVE BOXES

A. Buried valves shall be cleaned and manually operated before installation. Buried valves and valve boxes shall be set with the stem vertically aligned in the center of the valve box. Valves shall be set on a firm foundation and supported by tamping pipe bedding material under the sides of the valve. The valve box shall be supported during backfilling and maintained in vertical alignment with the top flush with finish grade. The valve box shall be set so as not to transmit traffic loads to the valve.

B. Before backfilling, all exposed portions of any bolts shall be coated with two (2) coats of bituminous paint.

W3.18 INSTALLATION OF TAPPING SLEEVES AND VALVES

A. The City of Georgetown shall be contacted and their permission granted prior to tapping a line. The required procedures and time table shall be followed exactly.

B. Installation shall be made under pressure and flow shall be maintained. The diameters of the tap shall be a minimum of $^{1}/_{4}$-inch less than the inside diameter of the branch line.

C. The entire operation shall be conducted by workers experienced in the installation of tapping sleeves and valves. The tapping machine shall be furnished by the Contractor.

D. Determine the location of the line to be tapped to confirm that the proposed location will be satisfactory and that no interference will be encountered such as joints or fittings. No tap or sleeve will be made closer than three (3) feet from a pipe joint.

E. A tapping sleeve and valve with boxes shall be set squarely centered on the line to be tapped. Adequate support shall be provided under the sleeve and valve during the tapping operation. Thrust blocks or other permanent restraint acceptable to the Engineer and the City shall be provided behind all tapping sleeves. Proper tamping of supporting pipe bedding material around and under the valve and sleeve is mandatory for buried installations.

F. After completing the tap, the valve shall be flushed to ensure that the valve seat is clean. All proper regulatory procedures (including disinfection) shall be followed exactly.

W3.19 INSTALLATION OF FIRE HYDRANTS

A. Fire hydrants shall be set at the locations as shown on the Plans and bedded on a firm foundation. Hydrants and connecting pipe shall have at least the same depth of cover as the distributing pipe. A drainage pit as detailed on the Plans shall be filled with ¾-inch washed rock gravel and compacted. The hydrants shall be set upon a slab of concrete not less than four (4)-inches thick and 15-inches square. During backfilling, additional screened gravel shall be brought up around and six (6) inches over the drain port. Each hydrant shall be set in true vertical alignment and properly braced.

B. 2,500 psi concrete thrust blocks shall be placed between the back of the hydrant inlet and undisturbed soil at the end of the trench. Minimum bearing area shall be as shown on the Plans. Eight (8) mil. Poyethlene film shall be placed around the hydrant elbow before placing concrete. CARE SHALL BE TAKEN TO ENSURE THAT CONCRETE DOES NOT PLUG THE DRAIN PORTS.

C. All connections from the main to the fire hydrants shall be anchoring mechanical joints designed to prevent movement due to thrust or pressure.

D. The hydrant shall be tied to the pipe with suitable rods or clamps, and shall be coated with Koppers 300 or approved equal at a minimum of 8 mil. thick. Bolts shall have a zinc bolt cover per AWWA. Hydrant paint shall be touched up as required after installation.

E. Fire hydrants shall be factory primed and painted silver using a high grade enamel.

F. Fire sprinkler lines shall be protected by a reduced pressure zone (RPZ). All fire lines shall be ductile iron pipe. All private fire lines shall be separated by double detecta check.

W3.20 FIELD TESTS AND ADJUSTMENTS

A. Conduct a functional field test of each valve, including actuators and valve control equipment, in presence of Engineer or the Representative of the City to demonstrate that each part and all components together function correctly. All testing equipment required shall be provided by the Contractor at his/her sole expense.

W3.21 PAYMENT

A. Gate valves, tapping sleeves and tapping valves, fire hydrants, and air and vacuum relief valves complete in place as shown on the Plans and as specified, will be paid for at the unit contract price per each as provided in the Proposal and Bid Schedule.

B. The unit price per each installation shall be the total compensation for furnishing all labor, materials, tools, equipment and incidentals necessary to complete the work including excavation, base blocking, disposal of surplus materials and backfill in conformance with the Plans and these specifications. The six (6) inch connection pipe, six (6) inch gate valve, test station, concrete collar, thrust block, drain pit, concrete pad, rods, bolts, paint, protective coatings, and fittings for fire hydrants shall not be paid for separately.

C. Fire hydrants shall be furnished with the proper length of barrel to comply with these specifications. Barrel extensions will not be measured and paid for separately.

D. No separate payment shall be made for work performed in accordance with this specification, other than that listed in Parts A-C of this subsection, and the cost thereof shall be included in the proper items of the Proposal and Bid Schedule.

END OF SECTION

TECHNICAL SPECIFICATIONS

SECTION W4 – ENCASEMENT PIPE

W4.01 SCOPE OF WORK

A. This specification covers the requirements for furnishing and installing encasement pipe complete in place including any required spacers and end plugs as shown on the plans and specified herein.

W4.02 SUBMITTALS

A. Within 30 days after the Notice to Proceed, the Contractor shall submit to the Engineer for approval, technical product literature including type and Manufacturer of pipe, spacers, and end plugs, and all other pertinent data to illustrate conformance to the specification found within.

W4.03 GENERAL

A. Where pipe is required to be installed under highways, streets, or other facilities, construction shall be made in such a manner that will not interfere with the operation of the street, highway, or other facility, and shall not weaken or damage any embankment or structure.

B. All carrier pipe shall be laid to the required line and grade within the specified limits through the encasement pipe. Carrier pipe shall be handled and placed in the encasement pipe by use of proper skids, wedges, guide fails or other approved means. Care shall be taken that once the pipe is in place to line and grade, it shall not be disturbed or become displaced. All carrier pipe shall have restrained joints.

W4.04 MATERIALS

A. Encasement pipe shall be smooth steel 35,000 psi yield strength with thickness according to the following table:

Carrier Size	Minimum Encasement Steel Casing Size	Minimum Casing Thickness
(Inner Diameter)	(Inner Diameter)	(Inches)
4"	14"	0.2500
6"	16"	0.2500
8"	18"	0.2500
10"	20"	0.3125
12"	24"	0.3175
14"	24"	0.375
16"	30"	0.4375
18"	30"	0.4375
20"	36"	0.500
24"	42"	0.500
27"	42"	0.500
30"	48"	0.500
33"	48"	0.500
36"	54"	0.500
39"	60"	0.500
42"	60"	0.500

B. Casing spacers shall be bolt-on style with a shell made in two (2) sections of Heavy T-304 stainless steel. Connecting flanges shall be ribbed for extra strength Casing spacers shall have runners made of ultra high molecular weight polymer, with a minimum height of two (2) inches. Wedges shall not be used between the top of the carrier pipe and the inside of the easement pipe. Casings spacers shall have a minimum of one (1) inch clear distance between the runners on top of the casing spacers and the inside of the encasement pipe. Prior to inserting the carrier pipe, all water shall be pumped out of the encasement pipe to at least a point where no more than two (2) inches of water remains. Spacers shall be required within at least three (3) feet from both openings of the encasement pipe and spaced no greater than six (6) feet through out the encasement pipe. Casing spacers will not be paid for directly but shall be considered subsidiary to the bid item of encasement pipe. . Casing spacers shall be made by Cascade Waterworks MFG Company or approve equal.

C. End Plugs shall be provided as required and as specified by the pipe manufacturer.

W4.05 PAYMENT

A. Separate payment will be made for Steel Encasement Pipe per linear foot as called for on the Plans and set forth in the Proposal and Bid Schedule.

B. All costs incurred for furnishing and installing encasement pipe shall include all labor, materials, tools, equipment and incidentals necessary to perform all work or whatever nature required to complete the specific operation.

END OF SECTION

CONCRETE SPECIFICATIONS

SECTION C

SECTION C2 – CONCRETE FOR STRUCTURES

C2.01 SCOPE OF WORK

A. This specification covers the requirements for concrete related materials used for the storing and handling of concrete related materials; and for the proportioning and mixing of concrete for bridges, culverts, pre-stressed concrete, and incidental concrete construction.

C2.02 SUBMITTALS

A. Within 30 days after the Notice to Proceed, the Contractor shall submit to the Engineer or the City for approval, technical product literature including the type of concrete, concrete mix design, concrete type and Manufacturer of precast structures, a description of curing methods used, and all other pertinent data to illustrate conformance to the specification found within.

C2.03 GENERAL

A. The concrete shall be composed of Portland cement, aggregates (fine and coarse), admixtures if desired or required, and water, proportioned and mixed as hereinafter provided.

1. Cement - The cement shall be either Type, I, II, or III Portland Cement conforming to ASTM Designation : C150

2. Mortar (Grout) - Mortar for repair of concrete, shall consist of 1 part cement, two (2) parts finely graded sand, and enough water to make the mixture plastic. When required to prevent color difference, white cement shall be added to produce the color required. When required by the City, latex adhesive shall be added to the mortar.

3. Admixtures - Calcium Chloride will not be permitted. Unless otherwise noted, Air-entraining, retarding and water reducing admixtures may be used in all concrete and shall conform to the requirements of the Standard Specification for Construction of Highways, Streets, and Bridges of the Texas Department of Transportation, latest edition.

C2.04 CLASSIFICATION AND MIX DESIGN

A. It shall be the responsibility of the Contractor to furnish the mix design, using a Coarse Aggregate Factor acceptable to the City, for the class (es) of concrete specified. The mix shall be designed by a qualified concrete technician to conform with the requirements contained herein and in accordance with current Texas Department of Transportation standards. The Contractor shall perform, at his own expense, the work required to substantiate the design. Complete concrete design data shall be submitted to the City for approval.

B. It shall also be the responsibility of the Contractor to determine and measure the batch quantity of each ingredient, including all water, so that the mix conforms to these specifications and any other requirements shown on the Plans.

C. In lieu of the above mix design responsibility, the Contractor may accept a design furnished by the City, however, this will not relieve him of providing concrete meeting the requirements of these specifications.

C2.05 QUALITY OF CONCRETE, GENERAL

A. The concrete shall be uniform and workable. The cement content, maximum allowable water cement ratio, the desired and maximum slump and the strength requirements of the various classes of concrete shall conform to the requirements of Tables 1 - 4 and as required herein.

Table 1

Concrete Designation	Desired Slump	Max. Slump
Structural Concrete		
(1) All Drill Shaft	6	7
(2) Uncased Drilled Shafts, Thin-Walled Sections (9" or less), and Prestressed Concrete Members	4	5
(3) Slabs, Caps, Columns, Piers, Wall Sections Over 9", etc.	3	4
Underwater or Seal Concrete	6	7
Riprap, Curb, Gutter and Other Miscellaneous Concrete	As specified by City	

NOTE: NO CONCRETE WILL BE PERMITTED WITH SLUMP IN EXCESS OF THE MAXIMUMS SHOWN.

B. Coarse Aggregate

Coarse aggregate shall be washed and shall consist of durable particles of gravel, crushed blast furnace slag, crushed stone, or combinations thereof and shall be free from frozen material or injurious amounts of salt, alkali, vegetable matter, or other objectionable material either free or as an adherent coating. When white portland cement is specified, the coarse aggregates used in the concrete shall be light colored. Quality shall be reasonably uniform throughout. Coarse aggregate shall not contain more than 0.25 percent by weight of clay lumps, or more than one (1) percent by weight of shale, or more than five (5) percent by weight of laminated and/or friable particles when tested in accordance with Test Method Tex-413-A. Coarse aggregate from each source shall have a wear of not more than 40 percent when tested in accordance with Test Method Tex-410-A.

Unless otherwise shown on the Plans, coarse aggregate from each source will be subjected to five (5) cycles of both the sodium sulfate and the magnesium sulfate soundness test in accordance with Test Method
Tex-411-A. When the loss is greater than 12-percent with sodium sulfate and/or 18 percent with magnesium sulfate, further testing will be required prior to acceptance or rejection of the material. A satisfactory record under similar conditions of service and exposure will be considered in the evaluation of material failing to meet these requirements.

When tested in accordance with Test Method Tex-401-A, the coarse aggregate, including combinations of aggregates when used, shall conform to the gradation requirements shown in Table 2.

Table 2
COARSE AGGREGATE GRADATION CHART

Percent Retained on Each Sieve										
Aggregate Grade No.	Nominal Size in.	2-$^1/_2$ in.	2 in.	1-$^1/_2$ in.	1 in.	$^3/_4$ in.	$^1/_2$ in.	$^3/_8$ in.	No. 4	No. 8
1	2	0	0-20	15-50		60-80			95-100	
2 (467)*	1-$^1/_2$		0	0-5		30-65		70-90	95-100	
3	1-$^1/_2$		0	0-5		10-40	40-75		95-100	
4 (57)*	1			0	0-5		40-75		90-100	95-100
5 (67)*	$^1/_4$				0	0-10		45-80	90-100	95-100
6 (7)*	$^1/_2$					0	0-10	30-60	85-100	95-100
7	$^3/_8$						0	5-30	75-100	
8	$^3/_8$						0	0-5	35-80	90-100

* Numbers in parenthesis indicate that these gradations conform to corresponding ASTM gradation in ASTM C33.

C. Fine Aggregate

Fine Aggregate shall be washed and consist of clean, hard, durable and uncoated particles of natural or Manufactured sand or a combination thereof, with or without a mineral filler. When white Portland cement is specified the fine aggregate used in the concrete shall be light colored. It shall be free from frozen material or injurious amounts of salt, alkali, vegetable matter or other objectionable material and it shall not contain more than 0.5-percent by weight of clay lumps. When the aggregate is subjected to the color test for organic impurities in accordance with Test Method Tex-408-A, the test result shall not show a color darker than standard.

Unless otherwise shown on the Plans, the acid insoluble residue of fine aggregate used in concrete subject to direct traffic shall be not less than 60 percent by weight when tested in accordance with Test Method Tex-612-J.

When tested in accordance with Test Method Tex-401-A, the fine aggregate or combinations of aggregates, including mineral filler shall conform to the gradation requirements shown in Table 3.

Table 3
FINE AGGREGATE GRADATION CHART

Percent Retained on Each Sieve								
Aggregate Grade No.	$^3/_8$ in.	No. 4	No. 8	No. 16	No. 30	No.50	No. 100	No. 200
1	0	0-5	0-20	15-50	35-75	65-90	90-100	97-100

1. Where manufactured sand is used in lieu of natural sand, the percent retained on the No. 200 sieve shall be 94 to 100.

2. Where the sand equivalent value is greater than 85, the retainage on the No. 50 sieve may be 65 to 94 percent.

3. Fine aggregate will be subjected to the Sand Equivalent Test (Test Method Tex-203-F). The sand equivalent shall not be less than 80 unless otherwise shown on the Plans.

4. For all classes of concrete, except class K, the fineness modulus shall be between 2.30 and 3.10 as determined by Test Method Tex-402-A. The fineness modulus for class K shall be 2.6 to 2.8 unless otherwise shown on the Plans.

Table 4

SLUMP REQUIREMENTS

Class of Conc.	Sacks of Cement per C.Y.	Min. Comp Strength 28 (f'c) 28 Day psi	Min Beam Strength 7 Day	Max. Water Cement Ratio gal/sack	Coarse Aggr. No.
A	5.0	3000	425 390 (3)	6.5	1-2-3-4-8 (1) (4)
B	4.5	2500	300	8.0	2-3-4-5-6-7
C	6.0	3600	510	6.0	1-2-3-4-5-
D	3.0	1500	215	11.0	2-3-4-5-6-7
E	6.0	3000	425	6.0	2-3-4-5
S	6.5	4000	570 525 (3)	5.0	2-3-4-5
P	5.0	NA	555 (2)	6.25	2-3
DC	8.75	5500	720	3.6	6
CO	7.0	4600	640	4.5	6
SS	7.0	3600	510	5.5	3-4-5

1. Grade 8 aggregate for use in extended course, unless a larger size is approved by the Engineer or City.

2. Minimum running average of concrete pavement.

3. When Type II or Type I / II is cement is used.

4. Unless otherwise permitted by the Engineer, Grade I coarse aggregate may only be used in massive foundations with four (4) inch minimum clear spacing between reinforcing steel bars. Grade I aggregate may not be used in Drill Shafts.

CLASS OF CONCRETE	TYPICAL USAGE
A	Drill Shafts, Culverts, (except top of slab of Direct Traffic Culverts), Inlets, Manholes, Headwalls, Approach Slabs, Curb, Gutter, Curb and Gutter, Concrete Retards, Sidewalks, Driveways, Concrete Pavement, Back-up Walls and Anchors.
B	Rip Rap, Small Roadside Signs, and Anchors
C	Drilled Shafts, Bridge Substructures, Bridge Railing, Culverts (except top of slab of Direct Traffic Culverts), Wing Walls, Approach Slabs, Concrete Traffic Barriers
D	Rip Rap
E	Seal Concrete
S	Bridge Slab, Top Slab of Direct Traffic Culvert, Bridge Sub-structure
P	Concrete Pavement
DC	Dense Concrete Overlay
CO	Concrete Overlay
SS	Slurry Displacement Shafts, Underwater Drill Shafts

C2.06 <u>MIXING CONDITIONS</u>

A. The concrete shall be mixed in quantities required for immediate use. Retempering of concrete will not be permitted.

B. In threatening weather, which may result in conditions that will adversely affect quality of the concrete to be placed, the City may order postponement of the work. Where work has been started and changes in weather conditions require protective measures, the Contractor shall furnish adequate shelter to protect the concrete against damage from rainfall, or freezing temperatures. If necessary to continue operations during rainfall, the Contractor shall also provide protective coverings for the material stock piles. Aggregate stock piles need to be covered only to the extent necessary to control the moisture conditions in the aggregates to adequately control the consistency of the concrete.

C2.07 PLACING, CURING AND FINISHING

A. The placing of concrete, including construction of forms and falsework, curing and finishing, shall be in accordance with Section C1- CONCRETE STRUCTURES, and Section C1.14- FINISHING EXPOSED SURFACES.

C2.08 PAYMENT

A. No separate payment shall be made for work performed in accordance with this section of the specifications, and the cost thereof shall be included in the proper items of the Proposal and Bid Schedule.

END OF SECTION

TECHNICAL SPECIFICATIONS

SECTION C5 – CONCRETE SIDEWALKS, DRIVEWAYS AND FLATWORK

C5.01 SCOPE OF WORK

A. This specification covers the requirements for the construction of sidewalks and driveways on an approved subgrade with or without reinforcing steel, composed of Portland cement concrete, in conformity with the lines and grades established by the Engineer, and the details shown on the Plans.

C5.02 SUBMITTALS

A. Within 30 days after the Notice to Proceed, the Contractor shall submit to the Engineer for approval, technical product literature including concrete mix design, expansion joint material, curing method, and all other pertinent data to illustrate conformance to the specification found within. TDLR approvals shall be submitted by the Engineer of Record.

C5.03 MATERIALS

A. Materials and proportions used in construction under this item shall conform to the requirements as specified for Class "A" Concrete under Section C2- CONCRETE FOR STRUCTURES unless otherwise shown on the Plans. Reinforcing steel, if required, shall conform to the requirements as specified in Section C7- REINFORCING STEEL. Expansion joint filler shall be pre-molded material meeting the requirements specified in Section C1- CONCRETE STRUCTURES.

C5.04 CONSTRUCTION METHODS

A. The subgrade shall be excavated and shaped to line, grade and cross section and if considered necessary in the opinion of the City hand tamped and sprinkled. The subgrade shall be moist at the time the concrete is placed.

B. Forms shall be of wood or metal, of a section satisfactory to the City, straight, free from warp, and of a depth equal to the thickness of the finished work. They shall be securely staked to line and grade and maintained in a true position during the depositing of concrete.

C. The reinforcing steel, if required, shall be placed in position as shown on the Plans. Care shall be exercised to keep all steel in its proper locations. Reinforcing steel shall be adequately supported and approved by the City of Georgetown to assure proper placement when poured.

D. Sidewalks shall be constructed in sections of the lengths shown on the Plans. The different sections shall be separated by a pre-molded or board joint of the thickness shown on the Plans, placed vertically and at right angles to the longitudinal axis of the sidewalk. Where the sidewalk or driveways abut a curb or retaining wall, approved expansion material shall be placed along their entire length. Similar expansion material shall be placed around all blockouts and obstructions protruding through sidewalks or driveways.

E. Concrete shall be mixed in a manner satisfactory to the City, placed in the forms to the depth specified and shaped and tamped until thoroughly compacted and mortar entirely covers the surface. The top surface shall be finished with a wooden float to a rough texture. The outer edges and joints shall then be finished with approved tools to the radii shown on the Plans.

F. Sidewalks shall be marked into separate sections, each five (5) feet in length, by the use of approved jointing tools.

G. Sidewalks may be placed with Fibrous Concrete in lieu of reinforced concrete. All concrete for Fibrous Concrete shall conform to the requirements of Specification Section C2- CONCRETE FOR STRUCTURES. Unless otherwise shown on the Plans the concrete shall be Class "A" as shown in Table 3 in Specification Section C2- CONCRETE FOR STRUCTURES. Reinforcing shall be 100% virgin

polypropylene fibrillated fibers specially manufactured for use as concrete reinforcement and meeting the requirements of ASTM C-1116. The fibrous material shall not contain reprocessed olefia. Each container of fibrous material shall bear the Manufacturer's name and its trademark and the net weight of fibrous material in the package. The specific gravity of the fibrous material shall be 0.91 plus or minus 0.05. The lengths of fibrous material shall be ½, ¼, 1 ½, and 2 inches in length. Each cubic yard of concrete shall contain no less than 1.5 pounds of fibrous material unless otherwise shown on the Plans. The fibrous material shall be added to the concrete mix at the time the mix is batched.

C5.05 PAYMENT

A. Payment for work performed in accordance with this section of the specifications shall be made at the unit bid price per square yard under the proper items of the Bid Schedule.

END OF SECTION

TECHNICAL SPECIFICATIONS

SECTION C7 – REINFORCING STEEL

C7.01 SCOPE OF WORK

A. This specification covers the requirements for the furnishing and placing of reinforcing steel, deformed and smooth, of the size and quantity designated on the Plans and in accordance with these specifications.

C7.02 SUBMITTALS

A. Within 30 days after the Notice to Proceed, the Contractor shall submit to the Engineer or the City for approval, technical product literature including the type of steel, mill test results, cut list as required by Contract, Plans or Details, type and Manufacturer of spacers and/or chairs, and all other pertinent data to illustrate conformance to the specification found within.

C7.03 MATERIALS

A. Unless otherwise designated on the Plans, all bar reinforcement shall be deformed, and shall conform to one of the following:

1. ASTM A 615, Grades 40 or 60 open hearth, basic oxygen, or electric furnace new billet steel.

2. ASTM A617, Grades 40 or 60, axle steel.

3. ASTM A616, Grade 60, rail steel will be permitted in concrete pavement only. ASTM A616 bars shall be furnished as straight bars only and bending is prohibited. Bend tests will not be required.

4. ASTM A706, Grade 60, weldable reinforcing steel.

5. Smooth Bars for concrete pavement shall have a minimum yield strength of 60 ksi.

   All other smooth bars, larger than No. 4, may be steel conforming to the above or may be furnished in any steel that meets the physical requirements of ASTM A36.

6. Spiral reinforcement shall be in accordance with TxDOT Item 440 of the Standards Specifications for Construction of Highways, Streets and Bridges and be either smooth or deformed bars, or wire, of the minimum size or gage shown on the plans, or as specified herein.

   Bars for spiral reinforcement shall comply with ASTM A675, Grade 80 (reference to ASTM A29 is voided) A615 or A617, Grade 40, unless otherwise shown on the plans. Smooth wire shall comply with ASTM A82 and deformed wire shall comply with ASTM A496.

7. Wire for fabric reinforcement shall be in accordance with TxDOT Item 440 of the Standard Specifications for Construction of Highways, Streets and Bridges and conform to ASTM A82 or A496. Wire fabric shall conform to ASTM A185 or A497.

8. Epoxy coating material and the material used for the repair of the coating shall be in accordance with TxDOT Item 440 of the Standard Specifications for Construction of Highways, Streets and Bridges.

C7.04 BENDING

A. The reinforcement shall be bent cold, true to the shapes shown on the plans. Fabrication shall preferably be done in the shop. Field fabrication, if permitted, shall be done with equipment approved by the Engineer. Misfabricated, damaged or broken bars shall be rejected and replaced at the Contractor's expense. Damaged or broken bars imbedded in a previous concrete placement may be repaired with the approval of the Engineer. The inside diameter, unless otherwise shown on the plans, shall be in accordance with TxDOT Item 440 of the Standard Specifications for Construction of Highways, Streets and Bridges.

C7.05 TOLERANCES

A. Fabricating tolerances for bars, from plan dimensions, shall not be greater than shown in Figure 1 of TxDOT Item 440 of the Standard Specifications for Construction of Highways, Streets and Bridges.

C7.06 STORING

A. Steel reinforcement shall be stored above the surface of the ground upon platforms, skids, or other supports and shall be protected as far as practical from mechanical injury and surface deterioration caused by exposure to conditions producing rust. When placed in the work, reinforcement shall be free from dirt, paint, grease, oil, or other foreign materials. Reinforcement shall be free from injurious defects such as cracks and laminations. Rust, surface seams, surface irregularities or mill scale will not be cause for rejection, provided the minimum dimensions, cross-sectional area and tensile properties of a hand wire brushed specimen meets the physical requirements for the size and grade of steel specified.

C7.07 SPLICES

A. The splicing of bars, except when provided on the Plans, or specified herein, will not be permitted without written approval of the City.

B. Splices not provided for on the plans will be permitted in slabs 15 inches or less in thickness, columns, walls and parapets, but will not be included for measurement, and subject to the following:

C. Unless otherwise approved by the City, splices will not be permitted in bars 30 feet or less in plan length. For bars exceeding 30 feet in plans length, the distance center to center of splices shall not be less than 30 feet minus one splice length, with no more than one individual bar length less than 10 feet. Lap splices no shown on the plans, but permitted herein, shall be made in accordance with TABLE C7-1. The specified concrete cover and proper spacing shall be maintained at such splices and the lap spliced bars placed in contact and securely tied together.

TABLE C7-1 – Minimum Lap Requirements for Bar Sizes Through No. 11

	LAP LENGTH	
SIZE	UNCOATED	COATED
No. 3	1'-0''	1'-6''
No. 4	1'-6''	2'-3''
No. 5	1'-10''	2'-9''
No. 6	2'-3''	3'-4''
No. 7	3'-0''	4'-6''
No. 8	3'-9''	5'-7''
No. 9	4'-8''	7'-0''
No. 10	5'-7''	8'-4''
No. 11	6'-7''	9'-10''

Spiral steel shall be lapped a minimum of one turn. Bar sizes No. 14 and No. 18 may not be lapped.

D. Welded splices shall conform to the requirements of the plans and TxDOT Item 448, "Structural Field Welding", of the Standard Specifications for Construction of Highways, Streets and Bridges. End preparation for butt welding reinforcing bars shall be done in the field. Delivered bars shall be of

sufficient length to permit weld preparation.

E. Welded wire fabric shall be spliced using a lap length that will include the overlap of a minimum of two (2) cross wires plus two (2) inches on each sheet or roll. Splices using bars which develop equivalent strength and lapped in accordance with TABLE 7-1 will be permitted.

F. For box culvert extensions with less than one (1) foot of fill, the existing longitudinal bars shall have a lap with the new bars as shown in Table 1. For extensions with more than one (1) foot of fill, a minimum of six (6) inch lap will be required.

C7.08 MECHANICAL COUPLERS

A. When shown on the plans, or approved by the City, mechanical splices may be made in the reinforcing steel bars in accordance with TxDOT Item 440 of the Standard Specifications for Construction of Highways, Streets and Bridges.

C7.09 PLACING

A. Reinforcement shall be placed as near as possible in the position shown on the Plans. Unless otherwise shown on the Plans, dimensions shown for reinforcement are to the centers of the bars. In the plane of the steel parallel to the nearest surface of concrete, bars shall not vary from plan placement by more than one-twelfth ($^1/_{12}$) of the spacing between bars. In the plane of the steel perpendicular to the nearest surface of concrete, bars shall not vary from plan placement by more than one-quarter inch. Cover of concrete to the nearest surface of steel shall meet the above requirements but shall never be less than one and a half (1½) inches.

B. Vertical stirrups shall always pass around the main tension members and be attached securely thereto. The reinforcing steel shall be spaced its required distance from the form surface by means of approved galvanized metal spacers, metal spacers with plastic coated tips, stainless steel spacers, plastic spacers, or approved pre-cast mortar or concrete blocks. For approval of plastic spacers on a project, representative samples of the plastic shall show no visible indications of deterioration after immersion in a five (5) percent solution of sodium hydroxide for 120 hours.

C. All reinforcing steel shall be tied at all intersections, except that where spacing is less than one (1) foot in each direction in which case reinforcing site shall be tied at alternate intersections. For reinforcing steel cages for other structural members, the steel shall be tied at a sufficient number of intersections to provide a rigid cage of steel.

D. Before any concrete is placed, all mortar, mud, dirt, etc. shall be cleaned from the reinforcement. Precast mortar or concrete blocks to be used for holding steel in position adjacent to formed surfaces shall be cast in molds meeting the approval of the City and shall be cured by covering with wet burlap or cotton mats for a period of 72 hours. Mortar for blocks shall contain approximately one (1) part portland cement to three (3) parts sand. Concrete for blocks shall contain nine (9) sacks of portland cement per cubic yard of concrete.

E. The blocks shall be cast in the form of a frustum of a cone or pyramid with the smaller face placed against the forms.

F. A suitable tie wire shall be provided in each block, to be used for anchoring to the steel. Except in unusual cases, and when specifically otherwise authorized by the City, the size of the surface to be placed adjacent to the forms shall not exceed two and one-half (2½) inches square or the equivalent thereof in cases where circular or rectangular areas are provided. Blocks shall be cast accurately to the thickness required, and the surface to be placed adjacent to the forms shall be a true plane free of surface imperfections.

G. Reinforcement shall be supported and tied in such manner that a sufficiently rigid cage of steel is provided. If the cage is not adequately supported to resist settlement or floating upward of the steel, overturning of truss bars, or movement in any direction during concrete placement, permission to continue concrete placement will be withheld until corrective measures are taken. Sufficient measurements shall be made during concrete placement to insure compliance with the first paragraph of the Article.

H. Mats of wire fabric shall overlap each other sufficiently to maintain a uniform strength and shall be fastened securely at the ends and edges.

I. No concrete shall be deposited until the City has inspected the placement of the reinforcing steel and given permission to proceed. If the reinforcement is not adequately supported or tied to resist settlement, floating upward, overturning of truss bars, or movement in any direction during concrete placement, concrete placement will be halted until corrective measures are taken.

C7.10 EPOXY COATING OF REINFORCING STEEL

A. When shown on the plans, coating with epoxy of reinforcing bars, plain wire, deformed wire or welded wire fabric to be used as reinforcement of concrete shall conform to the requirements of TxDOT Item 440 of the Standard Specifications for Construction of Highways, Streets and Bridges.

C7.11 PAYMENT

A. No separate payment shall be made for work performed in accordance with this section of the specifications, and the cost thereof shall be included in the proper items of the Proposal and Bid Schedule.

END OF SECTION

TECHNICAL SPECIFICATIONS

SECTION C9 – FLOWABLE BACKFILL

C9.01 SCOPE OF WORK

A. This specification covers the requirements for the furnishing and placing of flowable backfill as indicated on the Plans.

C9.02 SUBMITTALS

A. Within 30 days after the Notice to Proceed, the Contractor shall submit to the Engineer or the City for approval, technical product literature including flowable backfill mix design, curing method, and all other pertinent data to illustrate conformance to the specification found within.

C9.03 CONSTRUCTION METHODS

A. All trenches to be backfilled shall be properly prepared according to the Plans and Specifications prior to placement of flowable backfill.

C9.04 FLOWABLE BACKFILL

A. Flowable backfill shall be placed in accordance with the details and to the dimensions shown on the Plans or as established by the City.

B. The mixture shall consist of 188 pounds of Type III Portland cement, 94 pounds of fly ash and 3,000 pounds of sand per cubic yard of flowable backfill.

C. The minimum allowable slump for flowable backfill is 6-inches.

D. Immediately following the placement of flowable backfill, it shall be cured in accordance with Section C1- CONCRETE STRUCTURES.

C9.05 PAYMENT

A. Payment for flowable backfill shall be subsidiary to the appropriate bid items of the Proposal and Bid Schedule.

END OF SECTION

THIS PAGE INTENTIONALLY LEFT BLANK.

©2024 CDM Smith
All Rights Reserved

SECTION 011000 - SUMMARY

PART 1 - GENERAL

1.1 RELATED DOCUMENTS

A. Drawings and general provisions of the Contract, including General and Supplementary Conditions and other Division 01 Specification Sections, apply to this Section.

1.2 SUMMARY

A. Section Includes:

1. Project information.
2. Specification and Drawing conventions.

B. Related Requirements:

1. Section 015000 "Temporary Facilities and Controls" for limitations and procedures governing temporary use of Owner's facilities.
2. Section 017300 “Execution” for coordination of Owner-installed products.

1.3 DEFINITIONS

A. Work Package: A group of specifications, drawings, and schedules prepared by the design team to describe a portion of the Project Work for pricing, permitting, and construction.

1.4 PROJECT INFORMATION

A. Project Identification: South Lake to South Fork Wastewater Improvements, Engineer Project No. 2048-272644.

1. Project Location: The Work is located within the City of Georgetown beginning at the location of the South Lake Water Treatment Plant located at the intersection of Crockett Gardens Road and Cedar Breaks Road and proceeding cross-country and within existing rights-of-way approximately 4.9 miles to the southern endpoint at an existing sewer interceptor connection at the South Fork of the San Gabriel River, as shown on the Location Plan included in the Plans.
2. City of Georgetown, Georgetown Municipal Court, Purchasing Department, at 510 W. 9th Street, Georgetown, Texas 78626.

B. Owner: City of Georgetown

C. Engineer: CDM Smith, Inc., Prominent Pointe I, 8310-1 N. Capital of Texas Hwy., Suite 250, Austin, TX 78731 .

D. Engineer's Consultants: Engineer has retained the following design professionals who have prepared designated portions of the Contract Documents:

1. Geotechnical Engineer: Terracon Consultant, Inc.

E. Web-Based Project Software: Project software will be used for purposes of managing communication and documents during the construction stage.

1. See Section 013100 "Project Management and Coordination." for requirements for using web-based Project software.

1.5 WORK COVERED BY CONTRACT DOCUMENTS

A. The Work of Project is defined by the Contract Documents and includes, but is not limited to, the following:

1. The project consists of furnishing, installing, and providing all labor and materials required for construction of the South Lake to South Fork Wastewater Improvements and other Work indicated in the Contract Documents.

B. Type of Contract:

1. Project will be constructed under a single prime contract.

1.6 PHASED CONSTRUCTION

A. Construct the Work phases, with each phase substantially complete as indicated on Drawings.

B. Before commencing Work of each phase, submit an updated copy of Contractor's construction schedule, showing the sequence, commencement, and completion dates**,** and move-out and -in dates of Owner's personnel for all phases of the Work.

1.7 WORK PERFORMED BY OWNER

A. Cooperate fully with Owner, so work may be carried out smoothly, without interfering with or delaying Work under this Contract or work by Owner. Coordinate the Work of this Contract with work performed by Owner.

B. Concurrent Work: Owner will perform the following construction operations at Project site. Those operations will be conducted simultaneously with Work under this Contract.

1. Owner is constructing the Cedar Breaks and D B Wood Lift Stations and sections of pipeline withing the lift statins limits of work. Pipelines to be constructed in this contract will connect to pipeline stubs set by the lift station construction contractor (by others).
2. The construction of Cedar Breaks and D B Wood Lift Stations that are outside the limit of work of this contract and connect to the pipeline work in this contract may be performed simultaneously by others.

1.8 WORK UNDER OWNER'S SEPARATE CONTRACTS

A. Work with Separate Contractors: Cooperate fully with Owner's separate contractors, so work on those contracts may be carried out smoothly, without interfering with or delaying Work under this Contract or other contracts. Coordinate the Work of this Contract with work performed under Owner's separate contracts.

B. Preceding Work: Owner will award separate contract(s) for the following construction operations at Project site. Those operations may be substantially complete or may be partially conducted simultaneously with Work under this Contract.

1.9 CONTRACTOR'S USE OF SITE AND PREMISES

A. Unrestricted Use of Site: Contractor shall have full use of Project site for construction operations during construction period. Contractor's use of Project site is limited only by Owner's right to perform work or to retain other contractors on portions of Project.

B. Limits on Use of Site: Limit use of Project site to areas within the Contract limits indicated. Do not disturb portions of Project site beyond areas in which the Work is indicated.

1.10 WORK RESTRICTIONS

A. Comply with restrictions on construction operations.

1. Comply with limitations on use of public streets, work on public streets, rights of way, and other requirements of authorities having jurisdiction.

1.11 SPECIFICATION AND DRAWING CONVENTIONS

A. Specification Content: The Specifications use certain conventions for the style of language and the intended meaning of certain terms, words, and phrases when used in particular situations. These conventions are as follows:

1. Imperative mood and streamlined language are generally used in the Specifications. The words "shall," "shall be," or "shall comply with," depending on the context, are implied where a colon (:) is used within a sentence or phrase.
2. Text Color: Text used in the Specifications, including units of measure, manufacturer and product names, and other text may appear in multiple colors or underlined as part of a hyperlink; no emphasis is implied by text with these characteristics.
3. Hypertext: Text used in the Specifications may contain hyperlinks. Hyperlinks may allow for access to linked information that is not residing in the Specifications. Unless otherwise indicated, linked information is not part of the Contract Documents.
4. Specification requirements are to be performed by Contractor unless specifically stated otherwise.

B. Division 00 Contracting Requirements: General provisions of the Contract, including General and Supplementary Conditions, apply to all Sections of the Specifications.

C. City of Georgetown General Requirements and Technical Specifications are included in Sections Capital Improvement Project Requirements (CIP), General Specifications (G), Street and Drainage (SD), Wastewater Specifications (WW), Water Specifications (W), and Concrete Specifications (C).

D. Division 01 General Requirements: Requirements of Sections in Division 01 apply to the Work of all Sections in the Specifications.

E. Drawing Coordination: Requirements for materials and products identified on Drawings are described in detail in the Specifications. One or more of the following are used on Drawings to identify materials and products:

1. Terminology: Materials and products are identified by the typical generic terms used in the individual Specifications Sections.
2. Abbreviations: Materials and products are identified by abbreviations scheduled on Drawings and published as part of the U.S. National CAD Standard.

PART 2 - PRODUCTS (NOT USED)

PART 3 - EXECUTION (NOT USED)

END OF SECTION 011000

© 2024 CDM Smith
All Rights Reserved

SECTION 011716 - EXISTING UTILITIES

PART 1 - GENERAL

1.1 RELATED DOCUMENTS

A. Drawings and general provisions of the Contract, including General and Supplementary Conditions and other Division 01 Specification Sections, apply to this Section.

1.2 SUMMARY

A. Section includes responsibilities for utility properties and service.
   1. Subsurface investigations performed by Terracon Consulting indicating:
      a. Subsurface conditions at various locations at the site.
      b. Presented in Boring Logs.
   2. Existing ground profiles shown on the Plans: plotted from field surveys and existing Drawings.

1.3 CONTRACTOR ACKNOWLEDGEMENTS:

A. Contractor is satisfied as to nature and location of the Work; general and local conditions, particularly those bearing upon availability of transportation, disposal, handling and storage of materials, availability of labor, water, electric power, roads, and uncertainties of weather, river/stream stages, or similar physical conditions at the site; conformation and conditions of the ground; character of equipment and facilities needed preliminary to and during the prosecution of the Work; and all other matters which can in any way affect the Work or the cost thereof under this Contract.

B. Contractor is further satisfied as to character, quality, and quantity of surface and subsurface materials to be encountered from inspecting the site, as well as from information presented herein as a part of these Contract Documents. Any failure to acquaint themself with available information will not relieve Contractor from responsibility for properly estimating the difficulty or cost of successfully performing the Work. Neither Owner nor Engineer assumes responsibility for any conclusion or interpretation made by Contractor on the basis of the information made available by Owner or Engineer.

1.4 RESPONSIBILITY FOR UTILITY PROPERTIES AND SERVICE

A. Known utilities and structures adjacent to or encountered in the Work are shown on Drawings. Locations shown are taken from existing records and the best information available from existing plans; however, it is expected that there may be some discrepancies and omissions in the locations and quantities of utilities and structures shown. Those shown are for the

convenience of Contractor only, and no responsibility is assumed by either Owner or Engineer for their accuracy or completeness.

B. Neither Owner nor his officers or agents shall be responsible to Contractor for damages as a result of Contractor's failure to protect utilities encountered in the Work.

C. Provide unobstructed access to fire hydrants, underground conduit, manholes, and water or gas valve boxes at all times.

D. Where Contractor's operations could cause damage which might result in considerable expense, loss, and inconvenience when operations are adjacent to or near railway, telegraph, telephone, television, power, oil, gas, water, sewer, irrigation, or other systems, do not commence operations until making all arrangements necessary for protection of these utilities and services.

E. Notify utility offices that are affected by construction operation at least five days in advance of commencing construction operations. Do not expose any utility without first obtaining permission from the affected agency. Once permission has been granted, locate and, if necessary, expose and provide temporary support for existing underground utilities in advance of operations.

F. Be solely and directly responsible to owners and operators of such utility properties for any damage, injury, expense, loss, inconvenience, delay, suits, actions, or claims of any character brought because of any injuries or damage that may result from construction operations under this Contract.

G. In the event of interruption to domestic water, sewer, storm drain, or other utility services as a result of accidental breakage due to construction operations, promptly notify proper authority and cooperate with said authority in restoration of service as promptly as possible and bear all costs of repair. In no event shall interruption of any water or utility service be allowed unless prior approval is granted by utility owner.

H. Replace other existing utilities or structures removed or damaged during construction, unless otherwise provided for in these Contract Documents.

I. Where existing utility lines or structures are so located as to physically conflict with permanent structures to be constructed under this Contract, the conflicting utility line or structure shall be permanently relocated. Such relocations shall be considered as required by this Contract.

J. Give immediate notice to Engineer, Owner and owner of the utility (where applicable) when a physical conflict is determined to exist. Any delays resulting from required relocations of utilities are the responsibility of Contractor.

K. Where existing utility lines or structures are so located as to interfere with Contractor's prosecution of the Work, but do not physically conflict with completed manholes or other permanent structures to be constructed under this Contract, any modification, alteration, or relocation of interfering utility, either permanent or temporary, shall be accomplished at expense of Contractor.

L. Give immediate notice to Engineer and Owner of the utility when an interference is determined to exist and obtain approval to relocate such utility or to discontinue service from Engineer and utility owner. Utility owner shall have the right to do all work required to discontinue, relocate, and replace interfering utilities and charge Contractor for related costs. When approved by Engineer and utility owner, work required to discontinue, relocate, and replace interfering utilities may be done by, or arranged for, by Contractor. All such discontinuance, relocation, and replacement shall be accomplished in accordance with all requirements of utility owner.

M. When notified by Contractor that an interference or conflict has been determined to exist, Engineer will determine whether such interference shall be considered as required by construction or as incidental to construction.

1.5 INTERFERING STRUCTURES

A. Take necessary precautions to prevent damage to existing structures whether on surface, aboveground, or underground. An attempt has been made to show major structures on Drawings. While information has been compiled from best available sources, its completeness and accuracy cannot be guaranteed, and it is presented as a guide to avoid known possible difficulties.

B. Protect existing structures from damage, whether or not they lie within the right of way or the limits of the easements obtained by Owner. Where existing structures must be removed to properly conduct the Work, or are damaged during the Work, they shall be restored by Contractor's to at least their original condition and to satisfaction of Engineer.

C. Contractor may, with approval of Engineer and without additional compensation, remove and replace in a condition as good as or better than original, any small interfering structures such as fences and signposts that interfere with Contractor's operations.

1.6 FIELD RELOCATION

A. During the progress of the Work, minor relocations of the work may be necessary. Such relocations shall be made only by direction of Owner or Engineer. If existing structures are encountered that will prevent construction as shown, notify Owner or Engineer before continuing with the Work in order that Engineer may make such field revisions as necessary to avoid conflict with the existing structures. If Contractor fails to notify Owner or Engineer when an existing structure is encountered and proceeds with the Work despite this interference, Contractor shall be responsible for any damage that may occur.

1.7 LAND MONUMENTS

A. Preserve or replace any existing Federal, State, County, City, and private land monuments encountered. All monument replacement by Contractor shall be performed by a land surveyor licensed in the State of Texas.

1.8 PAYMENT

A. The Work specified in this Section shall be considered incidental and payment will be included as part of the appropriate lump sum or unit prices specified in the Section 00300 Bid Form.

PART 2 - PRODUCTS (NOT USED)

PART 3 - EXECUTION (NOT USED)

END OF SECTION 011716

©2024 CDM Smith
All Rights Reserved

SECTION 012200 - MEASUREMENT AND PAYMENT

PART 1 - GENERAL

1.1 RELATED DOCUMENTS

A. Drawings and general provisions of the Contract, including General and Supplementary Conditions and other Division 01 Specification Sections, apply to this Section.

1.2 SUMMARY

A. Section includes administrative and procedural requirements for the measurement and payment of the various elements of the Work; with provisions applicable to lump sum prices, unit prices, and Owner-Directed Improvements, if applicable.

B. The Total Amount Proposed in the Bid Form shall cover all Work required by the Contract Documents. The lump sum and unit prices proposed shall include all costs in connection with the proper and successful completion of the Work, including but not limited to: furnishing all materials, equipment, supplies, and appurtenances; providing all construction equipment and tools; and performing all necessary labor and supervision to fully complete the Work. All Work not specifically set forth as to the pay item or items in the Bid shall be considered subsidiary obligations of Contractor and all costs in connection therewith shall be included in the prices or included in Bid.

C. Related Requirements:

1. Section 00300 – Bid Form

2. Section 00700 – General Conditions

3. Section 013300 – Submittal Procedures

4. 014000 "Quality Requirements" for field testing by an independent testing agency.

1.3 DEFINITIONS

A. Unit price is an amount incorporated into the Agreement, applicable during the duration of the Work as a price per unit of measurement for materials, equipment, or services, or a portion of the Work, added to or deducted from the Contract Sum by appropriate modification, if the scope of Work or estimated quantities of Work required by the Contract Documents are increased or decreased.

1.4 BID FORM

A. The Bid Form is a part of these Contract Documents and lists each item of work for which payment will be made. No payment will be made for items other than those listed in the Bid Form.

Lump Sum measurement will be for the entire item, unit of work, structure, or combination thereof, as specified and as indicated in the Bid Form.

B. Required items of work and incidentals necessary for the satisfactory completion of the Project which are not specifically listed in the Bid Form, and which are not specified in this Section to be measured or to be included in one of the items listed in the Bid Form shall be considered as incidental to the work required under this contract, and all costs thereof, including Contractor's overhead costs and profit, shall be considered as included in the prices Bid for the various Bid Items. The Contractor shall prepare his Bid accordingly.

C. Work includes furnishing all plant, labor, equipment, tools and materials, and performing all operations required to complete the work satisfactorily, in place, as specified and as indicated on the Drawings.

1.5 UNIT PRICE ITEMS

A. Unit prices include all necessary material, plus cost for delivery, installation, insurance, applicable taxes, overhead, and profit.

B. Measurement and Payment: See individual Specification Sections or Bid Form for work that requires establishment of unit prices. Methods of measurement and payment for unit prices are specified in those Sections or the Bid Form.

C. Owner reserves the right to reject Contractor's measurement of work-in-place that involves use of established unit prices and to have this work measured, at Owner's expense, by an independent surveyor acceptable to Contractor.

1.6 LUMP SUM ITEMS

A. Lump Sum measurement will be for the entire item, unit of work, structure, or combination thereof, as specified and as indicated in the Bid Form. Measurement and payment for all Bid items indicated as Lump Sums shall include the cost of all labor, materials and equipment necessary to furnish, install, clean, test, and place each Bid item into operation; including permitting, general conditions, overhead and profit.

B. Progress payments will be based on schedule of values prepared by the Contractor and approved by the Engineer and Owner before acceptance of the first Application for Payment.

C. In order for the Contractor to request progress payments against Lump Sum items, Contractor shall provide a disaggregation or breakdown in sufficient measurable detail that is acceptable to Engineer.

D. Measurement

1. Measurement shall be based on the estimated percent complete of each item of the Schedule of Values, as determined by the Engineer.

E. Payment

1. Payment will be made at the lump sum price proportional to the completion percentages approved by the Engineer.

1.7 OWNER-DIRECTED IMPROVEMENT

A. Owner-Directed Improvements, if any, specified in the Contract Documents and indicated in the Bid Form are considered provisional amounts to be used only if directed. Owner-Directed Improvements are exclusive of work indicated in the Contract Documents for which payment is included under other items in the Bid Form. No work may be performed under an Owner-Directed Improvement without prior written approval of the Owner.

B. Any unused balance of the Owner-Directed Improvements shall revert to the Owner upon completion of the project. Prior to final payment, the original amount provided for Owner-Directed Improvements shall be adjusted to actual costs by deductive Change Order, adjusting the contract price, accordingly.

C. The Contractor shall make no claim, nor receive any compensation, for anticipated profits, loss of profit, damages, or any extra payment due to any unexpended portion of the Owner-Directed Improvements.

D. The Contractor is to include time for Owner-Directed Improvement work in the construction schedule. No adjustment of Contract Time shall be allowed for any work performed under Owner-Directed Improvement items.

E. Owner-Directed Improvement items shall be included in the Schedule of Values.

F. Unless otherwise indicated in the specific measurement and payment provisions under Owner-Directed Improvement items, the measurable and allowable costs for work performed under an Owner-Directed Improvement item shall be limited to the actual, demonstrable, and direct costs associated with that Owner-Directed Improvement item. Shipping and sales taxes are allowable costs.

1. No mark-up for overhead or profit shall be included for payment under an Owner-Directed Improvement account item. Overhead and profit shall be included in the contract base Bid or allocated across other Bid items.

2. Work authorized by the Owner under an Owner-Directed Improvement may be performed as a lump sum (negotiated before the fact), unit prices (when applicable), or time and material. For work performed under time and material, Contractor shall submit detailed verification (break-down) of all costs, subject to the approval of the Engineer or Owner.

PART 2 - PRODUCTS (NOT USED)

PART 3 - EXECUTION

3.1 PROGRESS PAYMENTS FOR INSURANCE, BONDS, AND MOVE-IN RELATED COSTS (MOBILIZATION AND DEMOBILIZATION) (Item 1)

1. Payment for Insurance and Bonds

a. Contractor's Insurance and Bonds shall include costs for insurance plus Performance and Payment Bonds.
b. Payment for Insurance and Bonds will be made on the first approved monthly pay request with suitable evidence of the cost thereof. The amount should agree with the suitable evidence provided and the Schedule of Values.
c. The amount of the Insurance and Bonds on the Schedule of Values shall not exceed 2.5 percent of the total contract amount. The amount of the Insurance, Bonds, and Mobilization/Demobilization shall not exceed 5 percent of the total contract amount.

2. Payment for Mobilization and Demobilization
   a. Mobilization and Demobilization includes costs of personnel, equipment and supplies, construction offices and the utility costs associated therewith, etc.
   b. Payments for Mobilization and Demobilization will be made as follows based upon the "adjusted contract amount" for construction items. The "adjusted contract amount" is defined as the total contract amount less the amount for Insurance and Bonds and less the amount for Mobilization and Demobilization.
   c. When 1 percent of the adjusted contract amount for construction items is earned, 25 percent of the mobilization and demobilization amount shown in the Schedule of Values will be paid.
   d. When 10 percent of the adjusted contract amount for construction items is earned, 50 percent of the mobilization and demobilization amount shown in the Schedule of Values will be paid.
   e. When 25 percent of the adjusted contract amount for construction items is earned, 75 percent of the mobilization and demobilization amount shown in the Schedule of Values will be paid.
   f. Upon Final Completion of all Work items, payment for the remainder of the mobilization and demobilization amount shown in the Schedule of Values will be made.
   g. The amount for Insurance, Bonds, and Mobilization/Demobilization shall not exceed 5 percent of the total contract amount.

3.2 STORM WATER POLLUTION PREVENTION PLAN (SWPPP) (Item 2)

A. Measurement
   1. Measurement for payment of this item shall be on a lump sum basis paid on a percentage of completion of the contract over the duration of the construction schedule.

B. Payment
   1. Payment of the lump sum price for this item shall be full compensation for all costs associated with implementation and maintenance of erosion and sedimentation controls in accordance with Specifications 312500 and G6. Payment shall include, but is not limited to stabilized construction entrances, sediment fencing, mulch socks, rock berms, temporary mulching, and erosion control blankets, including installation, maintenance, removal and final cleanup.

3.3 SITE, RIGHT-OF-WAY, AND EASEMENT PREPARATION (Item 6)

A. Measurement and Payment

1. Payment for site, right-of-way, and easement preparation will be made at the unit price bid in the Bid Form. This price shall include costs incurred by the Contractor for surveying and layout of all easements and proposed pipelines, clearing, grubbing, stripping, disposal, and protection as specified, and shall be full compensation for all labor, materials, equipment and incidentals required to do all the work as specified and shown including work not specifically included under other items but which are obviously necessary for the proper installation of the Contract.

3.4 SEWER AND FORCE MAIN PIPE AND APPURTENANCES (Items 13 thru 25 and 35 thru 37)

A. Measurement
1. Sewer and force main pipe of the type, size, and depth specified on the Bid Form (Items 13, 14, 16, 17, 18, 19, 20, and 21) will be measured in place on a linear foot basis. Measurement for payment does not signify that the pipe is accepted.
2. Measurement of pipe for length will be along the horizontal centerline of the pipe with no deduction for fittings and will be to the center of manholes. Measurement will be to the nearest tenth of a foot.
3. Ductile iron fittings (bends, etc.) installed in the completed project (Items 15) shall be measured by the pound, excluding cement lining, based on tabular weights obtained from the current ANSI Standards. The weight of the fittings shall not include the weight of glands, bolts, nuts, gaskets or accessories.
4. Trenchless gravity sewer and force main pipe in steel casings installed by other than open cut (Items 22 thru 25), complete and in place, shall be measured in place on a linear foot basis.
5. External drop manhole connections (Items 35, 36, and 37) will be measured in vertical feet from the upper invert of the drop to the lower invert of the drop, as shown on the Drawings, but will not be less than 3 feet for each drop connection.

B. Payment
1. Payment for furnishing and installing sewer and force main pipe will be made for the respective quantities as determined above at the unit price bid under Items 13, 14, 16, 17, 18, 19, 20, and 21 in the Bid Form. This price and payment shall be full compensation for cutting and removing existing pavement, trench excavation (including rock and boulder excavation), backfilling and compaction, installing impervious dams, restoring the trench surface to grade, all restoration required within the trench limits, protection or temporary removal and replacement of existing utilities, furnishing screened gravel bedding for pipe, furnishing, laying, jointing, cleaning, and testing the pipe, restrained joints, mechanical joints where required, fittings; cement lining for DI pipe as specified; Protecto 401 lining for DI pipe as specified and where indicated on the Drawings; and all incidental work, including driving and removing sheeting and bracing, temporary trench support, environmental protection, and all else incidental thereto, for which separate payment is not provided under other items in the Bid Form.
2. Payment will be made for pipe only when it is installed in the ground, and no so-called proportional payment shall be made for pipe on the site but not yet installed.
3. Payment for furnishing and installing ductile iron fittings based on weights as herein specified will be made for the quantity determined above at the unit price bid under Item 15 in the Bid Form. Payment shall not include weight of glands, bolts, nuts, gaskets or accessories. Price and payment shall be full compensation for furnishing and installing the fitting with cement lining, glands, bolts, nuts, gaskets, jointing and all work required

for, or incidental to the satisfactory completion of the Item for which payment is not provided under other items in the Bid Form.

4. Payment for furnish and installing trenchless gravity sewer and force main pipe in steel casings by other than open cut (Items 22 thru 25), complete and in place, shall be paid for at the contract unit price in the Bid Form. Payment shall include the carrier (gravity sewer or force main) pipe installed inside the casing including heavy wall or additional strength pipe. Payment for tunnels shall include all costs of bulkheads, guardrails, casing, spacers, tunneling, access pits, exterior grouting, interior grouting, sealing ends of casing, pipe rails, and all other items for crossing as shown on the plans and required for installation.
5. Payment for furnishing and installing external drop manhole connections will be made for the quantity in vertical feet as determined above at the price per vertical foot bid for Items 35, 36, and 37 in the Bid Form. This price and payment shall be full compensation for furnishing and installing the PVC drop pipe, tees, all necessary fittings and braces, concrete encasement, cutting into manhole wall (if required), grout, and all else incidental thereto for which separate payment is not provided under other items in the Bid Form.

3.5 GATE VALVES (Item 26)

A. Measurement
1. Gate valves (Item 26) shall be counted as the number of items of each size and type installed.

B. Payment
1. Payment for resilient wedge gate valves shall include furnishing and installing the valves, with valve boxes and covers, and valve identification markers. Price and payment will be full compensation for utility locates, excavation (including rock and boulder excavation), installation, furnishing and installing restrained joints, reinforced concrete pads and valve supports, valve box and cover, stem extension, backfilling, cleaning, testing, as specified, and all work required for or incidental to the satisfactory completion of the items for which separate payment is not provided under other items in the Bid Form.

3.6 PRECAST CONCRETE SEWER MANHOLES, STRUCTURES AND APPURTENANCES (Items 27 thru 34, 36, 37, 39, and 42)

A. Measurement
1. Measurement for payment of precast concrete sewer manholes and appurtenances (Items 27, 28, and 29) shall be for the first 10-feet of manhole depth measured in vertical feet from the invert of the lowest pipe in the manhole to the top of the manhole frame.
2. Measurement for payment of additional depth of precast concrete sewer manholes (Items 30, 31, and 32) shall be measured per additional vertical foot beyond the first 10-feet of depth paid for separately to the invert of the lowest pipe in the manhole.
3. Measurement for all work required to furnish and install the 6-Foot Diameter Force Main Discharge Manhole at 18-in pipe discharge (Item 33) and New Doghouse Manhole and 30-in External Drop over the existing 36-in FRP interceptor (Item 34), shall be on a lump sum basis.
4. Measurement for manhole frames and covers (Items 38 and 39) and manhole vents (Item 40) will be measured as the number actually installed and accepted in the locations shown on the Drawings or as designated by the Engineer.

5. Measurement for all work required to install an epoxy coating system to all internal sewer manhole surfaces (Item 41), shall be on a lump sum basis.
6. Automatic air release valve manholes (Item 44) will be measured as the number actually installed and accepted in the locations shown on the Drawings or as designated by the Engineer.

B. Payment

1. Payment for furnishing and installing concrete sewer manholes will be made for the quantity as above determined at the unit price bid for Items 27 thru 32 in the Bid Form. This price and payment shall be full compensation for all excavation (including rock and boulder); furnishing, installing and removing sheeting and bracing; temporary excavation support; backfilling and compaction; furnishing and installing precast concrete manhole sections and bases; furnishing and installing cast in-place bases where shown on the Drawings or as directed by the Engineer; furnishing and installing cushions/gaskets for manhole covers; screened gravel subbase; all forms, reinforcing, concrete and masonry materials; bricks, concrete grade rings, brick channels and shelves where shown on the Drawing or specified; flexible pipe repair couplings; and all else incidental thereto, for which separate payment is not provided under other items in the Bid Form.
2. Payment for furnishing and installing 6-Foot Diameter Force Main Discharge Manhole at 18-in pipe discharge (Item 31) will be made at the lump sum price bid for Item 33 in the Bid Form. This price and payment shall be full compensation for all excavation (including rock and boulder); furnishing, installing and removing sheeting and bracing; temporary excavation support; backfilling and compaction; furnishing and installing precast concrete manhole sections and bases; furnishing and installing cast in-place bases where shown on the Drawings or as directed by the Engineer; furnishing and installing Protecto 401 lined ductile iron pipe and fittings, valve, force main vent piping in the manhole, pipe support, PVC to DI transition coupling (if needed), pipe restraints, reinforced concrete thrust collar installed to undisturbed rock, screened gravel subbase; all forms, reinforcing, concrete and masonry materials; bricks, concrete grade rings, brick channels and shelves where shown on the Drawing or specified; flexible pipe repair couplings; and all else incidental thereto, for which separate payment is not provided under other items in the Bid Form. This item shall include the force main discharge manhole and all pipe up to and including the reinforced concrete thrust collar/wall at the PVC to DI transition.
3. Payment for furnishing and installing New Doghouse Manhole and 30-in External Drop over the existing 36-in FRP interceptor (Item 34), concrete sewer manholes will be made at the lump sum price bid for Item 34 in the Bid Form. This price and payment shall be full compensation for all excavation (including rock and boulder); furnishing, installing and removing sheeting and bracing; temporary excavation support; backfilling and compaction; furnishing and installing the cast-in-place reinforced concrete doghouse manhole base section around the existing 36-in FRP interceptor, precast concrete manhole sections and bases; 30-in external drop connection; grout; concrete encasement of the external drop; screened gravel subbase; all forms, reinforcing, concrete and masonry materials; bricks, concrete grade rings, brick channels and shelves where shown on the Drawing or specified; flexible pipe repair couplings; maintenance of existing 36-in FRP sewer flows; and all else incidental thereto, for which separate payment is not provided under other items in the Bid Form.
4. Payment for furnishing and installing manhole frames and covers (Items 38 and 39) and manhole vents (Item 40) complete and in place and shall be at the contract unit price in the Bid Form. The work shall include all labor, materials and equipment to provide a new City of Georgetown approved manhole frames and covers, watertight manhole frames

and covers as indicated on the drawings, and manhole vents and all other incidentals necessary to complete the manholes as indicated and all else incidental thereto, for which separate payment is not provided under other items in the Bid Form.

5. Payment for furnishing and installing an epoxy coating system to the inside surface of all precast concrete sewer manholes (Item 41), will be made at the lump sum price bid for Item 41 in the Bid Form. This price shall be the full compensation for all materials, tools, labor, equipment, scaffolding, surface preparation, and incidentals necessary to perform the work. This price and payment shall be full compensation for all work to perform surface preparation (hydro- or sand-blasting), cleaning, creating a surface profile, allowing surfaces to dry, application of the epoxy coating as specified, curing, testing, allowing time for Owner to perform inspections and testing (if requested), and all else incidental thereto, for which separate payment is not provided under other items in the Bid Form.
6. Payment for the automatic air release/vacuum valve manholes at the locations shown on the Drawings will be made for the quantity as determined above at the unit price bid for each under Item 44 in the Bid Form, which price and payment shall be full compensation for furnishing all labor, equipment and materials required to install the valve manholes along the force mains complete in place as shown on the Drawings and specified herein. Payment shall include furnishing and installing the air release/vacuum valve and all required piping, fittings and appurtenances, PVC force main piping and fittings, mechanical joint adapters and stainless steel stiffeners, precast concrete manhole including all excavation (including rock and boulder), temporary excavation support, backfilling, precast sections and bases, screened gravel subbase, all forms, reinforcing, concrete and masonry materials, extra costs associated with installing the force main through the precast concrete manhole, vent pipe, and all else incidental thereto for which separate payment is not provided under other items in the Bid Form.

3.7 DEWATERING (Items 42)

A. Measurement

1. Measurement for payment for dewatering (Item 42) shall be on a lump sum basis.

B. Payment

1. Payment of the lump sum price bid for Items 42 in the Bid Form shall be full compensation for all labor, equipment, materials and incidentals necessary to handle groundwater and surface water to preserve the bearing capacity of the subgrade soils and allow construction to proceed "in-the-dry" as specified in Section 312319 “Dewatering” including but not limited to preparing and submitting a dewatering plan to the Engineer, obtaining all required permits, sinking well points, furnishing, installing and maintaining pumping systems including all pumps, piping, casing and other appurtenances, filter sand required for underdrains or pumping systems, erosion and sediment control, furnishing, installing and maintaining observation wells, and all else incidental thereto for which separate payment is not provided under other items in the Bid Form.

END OF SECTION 012200

©2024 CDM Smith
All Rights Reserved

SECTION 012500 - SUBSTITUTION PROCEDURES

PART 1 - GENERAL

1.1 RELATED DOCUMENTS

A. Drawings and general provisions of the Contract, including General and Supplementary Conditions and other Division 01 Specification Sections, apply to this Section.

1.2 SUMMARY

A. Section includes administrative and procedural requirements for substitutions.

B. Related Requirements:

1. Section 012100 "Allowances" for products selected under an allowance.
2. Section 016000 "Product Requirements" for requirements for submitting comparable product submittals for products by listed manufacturers.

1.3 DEFINITIONS

A. Substitutions: Changes in products, materials, equipment, and methods of construction from those required by the Contract Documents.

1. Substitutions for Cause: Changes proposed by Contractor that are required due to changed Project conditions, such as unavailability of product, regulatory changes, or unavailability of required warranty terms.
2. Substitutions for Convenience: Changes proposed by Contractor or Owner that are not required to meet other Project requirements but may offer advantage to Contractor or Owner.

1.4 ACTION SUBMITTALS

A. Substitution Requests: Submit documentation identifying product or fabrication or installation method to be replaced. Include Specification Section number and title and Drawing numbers and titles.

1. Substitution Request Form: Use form that is part of web-based Project management software.
2. Documentation: Show compliance with requirements for substitutions and the following, as applicable:

a. Statement indicating why specified product or fabrication or installation method cannot be provided, if applicable.

b. Coordination of information, including a list of changes or revisions needed to other parts of the Work and to construction performed by Owner and separate contractors that will be necessary to accommodate proposed substitution.
c. Detailed comparison of significant qualities of proposed substitutions with those of the Work specified. Include annotated copy of applicable Specification Section. Significant qualities may include attributes, such as performance, weight, size, durability, visual effect, sustainable design characteristics, warranties, and specific features and requirements indicated. Indicate deviations, if any, from the Work specified.
d. Product Data, including drawings and descriptions of products and fabrication and installation procedures.
e. Samples, where applicable or requested.
f. Certificates and qualification data, where applicable or requested.
g. List of similar installations for completed projects, with project names and addresses as well as names and addresses of Engineers and owners.
h. Material test reports from a qualified testing agency, indicating and interpreting test results for compliance with requirements indicated.
i. Research reports evidencing compliance with building code in effect for Project, from ICC-ES.
j. Detailed comparison of Contractor's construction schedule using proposed substitutions with products specified for the Work, including effect on the overall Contract Time. If specified product or method of construction cannot be provided within the Contract Time, include letter from manufacturer, on manufacturer's letterhead, stating date of receipt of purchase order, lack of availability, or delays in delivery.
k. Cost information, including a proposal of change, if any, in the Contract Sum.
l. Contractor's certification that proposed substitution complies with requirements in the Contract Documents, except as indicated in substitution request, is compatible with related materials and is appropriate for applications indicated.
m. Contractor's waiver of rights to additional payment or time that may subsequently become necessary because of failure of proposed substitution to produce indicated results.

3. Engineer's Action: If necessary, Engineer will request additional information or documentation for evaluation within seven days of receipt of a request for substitution. Engineer will notify Contractor of acceptance or rejection of proposed substitution within seven days of receipt of request, or seven days of receipt of additional information or documentation, whichever is later.

a. Forms of Acceptance: Change Order, Construction Change Directive, or Engineer's Supplemental Instructions for minor changes in the Work.
b. Use product specified if Engineer does not issue a decision on use of a proposed substitution within time allocated.

1.5 QUALITY ASSURANCE

A. Compatibility of Substitutions: Investigate and document compatibility of proposed substitution with related products and materials. Engage a qualified testing agency to perform compatibility tests recommended by manufacturers.

1.6 PROCEDURES

A. Coordination: Revise or adjust affected work as necessary to integrate work of the approved substitutions.

1.7 SUBSTITUTIONS

A. Substitutions for Cause: Submit requests for substitution immediately on discovery of need for change, but not later than 15 days prior to time required for preparation and review of related submittals.

1. Conditions: Engineer will consider Contractor's request for substitution when the following conditions are satisfied. If the following conditions are not satisfied, Engineer will return requests without action, except to record noncompliance with these requirements:

   a. Requested substitution is consistent with the Contract Documents and will produce indicated results.
   b. Substitution request is fully documented and properly submitted.
   c. Requested substitution will not adversely affect Contractor's construction schedule.
   d. Requested substitution has received necessary approvals of authorities having jurisdiction.
   e. Requested substitution is compatible with other portions of the Work.
   f. Requested substitution has been coordinated with other portions of the Work.
   g. Requested substitution provides specified warranty.
   h. If requested substitution involves more than one contractor, requested substitution has been coordinated with other portions of the Work, is uniform and consistent, is compatible with other products, and is acceptable to all contractors involved.

B. Substitutions for Convenience: Not allowed unless otherwise indicated.

C. Substitutions for Convenience: Engineer will consider requests for substitution if received within 60 days after commencement of the Work. Requests received after that time may be considered or rejected at discretion of Engineer.

1. Conditions: Engineer will consider Contractor's request for substitution when the following conditions are satisfied. If the following conditions are not satisfied, Engineer will return requests without action, except to record noncompliance with these requirements:

   a. Requested substitution offers Owner a substantial advantage in cost, time, energy conservation, or other considerations, after deducting additional responsibilities Owner must assume. Owner's additional responsibilities may include compensation to Engineer for redesign and evaluation services, increased cost of other construction by Owner, and similar considerations.
   b. Requested substitution does not require extensive revisions to the Contract Documents.
   c. Requested substitution is consistent with the Contract Documents and will produce indicated results.
   d. Substitution request is fully documented and properly submitted.

e. Requested substitution will not adversely affect Contractor's construction schedule.
f. Requested substitution has received necessary approvals of authorities having jurisdiction.
g. Requested substitution is compatible with other portions of the Work.
h. Requested substitution has been coordinated with other portions of the Work.
i. Requested substitution provides specified warranty.
j. If requested substitution involves more than one contractor, requested substitution has been coordinated with other portions of the Work, is uniform and consistent, is compatible with other products, and is acceptable to all contractors involved.

PART 2 - PRODUCTS (NOT USED)

PART 3 - EXECUTION (NOT USED)

END OF SECTION 012500

©2024 CDM Smith
All Rights Reserved

SECTION 012900 - PAYMENT PROCEDURES

PART 1 - GENERAL

1.1 RELATED DOCUMENTS

A. Drawings and general provisions of the Contract, including General and Supplementary Conditions and other Division 01 Specification Sections, apply to this Section.

1.2 SUMMARY

A. Section includes administrative and procedural requirements necessary to prepare and process Applications for Payment.

B. Related Requirements:

1. Section 012100 "Allowances" for procedural requirements governing the handling and processing of allowances.

1.3 DEFINITIONS

A. Schedule of Values: A statement furnished by Contractor allocating portions of the Contract Sum to various portions of the Work and used as the basis for reviewing Contractor's Applications for Payment.

1.4 SCHEDULE OF VALUES

A. Coordination: Coordinate preparation of the schedule of values with preparation of Contractor's construction schedule.

1. Coordinate line items in the schedule of values with items required to be indicated as separate activities in Contractor's construction schedule.
2. Submit the schedule of values to Engineer at earliest possible date, but no later than ten days before the date scheduled for submittal of initial Applications for Payment.
3. Subschedules for Phased Work: Where the Work is separated into phases requiring separately phased payments, provide subschedules showing values coordinated with each phase of payment.
4. Subschedules for Separate Elements of Work: Where the Contractor's construction schedule defines separate elements of the Work, provide subschedules showing values coordinated with each element.
5. Subschedules for Separate Design Contracts: Where the Owner has retained design professionals under separate contracts who will each provide certification of payment requests, provide subschedules showing values coordinated with the scope of each design services contract, as described in Section 011000 "Summary."

B. Format and Content: Use Project Manual table of contents as a guide to establish line items for the schedule of values. Provide at least one line item for each Specification Section.

1. Identification: Include the following Project identification on the schedule of values:

   a. Project name and location.
   b. Owner's name.
   c. Owner's Project number.
   d. Name of Engineer.
   e. Engineer's Project number.
   f. Contractor's name and address.
   g. Date of submittal.

2. Arrange schedule of values consistent with format of AIA Document G703.
3. Arrange the schedule of values in tabular form, with separate columns to indicate the following for each item listed:

   a. Related Specification Section or division.
   b. Description of the Work.
   c. Name of subcontractor.
   d. Name of manufacturer or fabricator.
   e. Name of supplier.
   f. Change Orders (numbers) that affect value.
   g. Dollar value of the following, as a percentage of the Contract Sum to nearest one-hundredth percent, adjusted to total 100 percent. Round dollar amounts to whole dollars, with total equal to Contract Sum.

      1) Labor.
      2) Materials.
      3) Equipment.

4. Provide a breakdown of the Contract Sum in enough detail to facilitate continued evaluation of Applications for Payment and progress reports. Provide multiple line items for principal subcontract amounts in excess of five percent of the Contract Sum.
5. Provide a separate line item in the schedule of values for each part of the Work where Applications for Payment may include materials or equipment purchased or fabricated and stored, but not yet installed.
6. Allowances: Provide a separate line item in the schedule of values for each allowance. Show line-item value of unit-cost allowances, as a product of the unit cost, multiplied by measured quantity. Use information indicated in the Contract Documents to determine quantities.
7. Purchase Contracts: Provide a separate line item in the schedule of values for each Purchase contract. Show line-item value of Purchase contract. Indicate Owner payments or deposits, if any, and balance to be paid by Contractor.
8. Overhead Costs, Proportional Distribution: Include total cost and proportionate share of general overhead and profit for each line item.
9. Overhead Costs, Separate Line Items: Show cost of temporary facilities and other major cost items that are not direct coat of actual work-in-place as separate line items.
10. Temporary Facilities: Show cost of temporary facilities and other major cost items that are not direct cost of actual work-in-place as separate line items.

11. Closeout Costs. Include separate line items under Contractor and principal subcontracts for Project closeout requirements in an amount totaling five percent of the Contract Sum and subcontract amount.
12. Schedule of Values Revisions: Revise the schedule of values when Change Orders or Construction Change Directives result in a change in the Contract Sum. Include at least one separate line item for each Change Order and Construction Change Directive.

1.5 APPLICATIONS FOR PAYMENT

A. Each Application for Payment following the initial Application for Payment shall be consistent with previous applications and payments as certified by Engineer and Inspector and paid for by Owner.

B. Payment Application Times: The date for each progress payment is indicated in the Owner/Contractor Agreement. The period of construction work covered by each Application for Payment is the period indicated in the Agreement.

C. Payment Application Times: Submit Application for Payment to Engineer by the 5th day of the month. The period covered by each Application for Payment is one month, ending on the [last day of the month.

1. Submit draft copy of Application for Payment twenty days prior to due date for review by Engineer.

D. Application for Payment Forms: Use AIA Document G703 as form for Applications for Payment. The contractor must use Owner's one page Pay Estimate and Signature and Certification Form for the first page of every application for payment.

1. Other Application for Payment forms proposed by the Contractor may be acceptable to Engineer, Inspector, and Owner. Submit forms for approval with initial submittal of schedule of values.

E. Application Preparation: Complete every entry on form. Notarize and execute by a person authorized to sign legal documents on behalf of Contractor. Engineer will return incomplete applications without action.

1. Entries shall match data on the schedule of values and Contractor's construction schedule. Use updated schedules if revisions were made.
2. Include amounts for work completed following previous Application for Payment, whether or not payment has been received. Include only amounts for work completed at time of Application for Payment.
3. Include amounts of Change Orders and Construction Change Directives issued before last day of construction period covered by application.
4. Indicate separate amounts for work being carried out under Owner-requested project acceleration.

F. Stored Materials: Include in Application for Payment amounts applied for materials or equipment purchased or fabricated and stored, but not yet installed.

1. Provide certificate of insurance, evidence of transfer of title to Owner, and consent of surety to payment.
2. Provide supporting documentation that verifies amount requested, such as paid invoices. Match amount requested with amounts indicated on documentation; do not include overhead and profit on stored materials.
3. Provide summary documentation for stored materials indicating the following:

    a. Value of materials previously stored and remaining stored as of date of previous Applications for Payment.
    b. Value of previously stored materials put in place after date of previous Application for Payment and on or before date of current Application for Payment.
    c. Value of materials stored since date of previous Application for Payment and remaining stored as of date of current Application for Payment.

G. Transmittal: Submit One (electronic) signed and notarized original copies of each Application for Payment to Engineer and Owner by a method ensuring receipt within 24 hours. One copy shall include waivers of lien and similar attachments if required.

1. Transmit each copy with a transmittal form listing attachments and recording appropriate information about application.

H. Waivers of Mechanic's Lien: With each Application for Payment, submit waivers of mechanic's lien from entities lawfully entitled to file a mechanic's lien arising out of the Contract and related to the Work covered by the payment.

1. Submit partial waivers on each item for amount requested in previous application, after deduction for retainage, on each item.
2. When an application shows completion of an item, submit conditional final or full waivers.
3. Owner reserves the right to designate which entities involved in the Work must submit waivers.
4. Submit final Application for Payment with or preceded by conditional final waivers from every entity involved with performance of the Work covered by the application who is lawfully entitled to a lien.
5. Waiver Forms: Submit executed waivers of lien on forms acceptable to Owner.

I. Maintain an updated set of drawings to be used as record drawings in accordance with Section 017839 “Project Record Documents.” As a prerequisite for monthly progress payments, exhibit the updated record drawings for review by Owner and Engineer for completeness and accuracy.

J. Initial Application for Payment: Administrative actions and submittals that must precede or coincide with submittal of first Application for Payment include the following:

1. List of subcontractors.
2. Schedule of values.
3. Contractor's construction schedule.
4. Combined Contractor's construction schedule incorporating Work of multiple contracts, with indication of acceptance of schedule by each Contractor.

K. Application for Payment at Substantial Completion: After Engineer issues the Certificate of Substantial Completion, submit an Application for Payment showing 100 percent completion for portion of the Work claimed as substantially complete.

1. Include documentation supporting claim that the Work is substantially complete and a statement showing an accounting of changes to the Contract Sum.

   a. Complete administrative actions, submittals, and Work proceeding this application, as described in Section 017700 "Closeout Procedures."

2. Include initial submittal of closeout record drawings in accordance with Section 017839 "Project Record Documents."
3. This application shall reflect Certificate(s) of Substantial Completion issued previously for Owner occupancy of designated portions of the Work.

L. Final Payment Application: After completing Project closeout requirements, submit final Application for Payment with releases and supporting documentation not previously submitted and accepted, including, but not limited, to the following:

1. Evidence of completion of Project closeout requirements.
2. Certification of completion of final punch list items.
3. Insurance certificates for products and completed operations where required and proof that taxes, fees, and similar obligations were paid.
4. Final submittal of closeout record drawings in accordance with Section 017839 "Project Record Documents."
5. Updated final statement, accounting for final changes to the Contract Sum.
6. AIA Document G706.
7. AIA Document G706A.
8. AIA Document G707.
9. Evidence that claims have been settled.
10. Final meter readings for utilities, a measured record of stored fuel, and similar data as of date of Substantial Completion or when Owner took possession of and assumed responsibility for corresponding elements of the Work.
11. Final liquidated damages settlement statement.
12. Proof that taxes, fees, and similar obligations are paid.
13. Waivers and releases.

PART 2 - PRODUCTS (NOT USED)

PART 3 - EXECUTION (NOT USED)

END OF SECTION 012900

This page intentionally left blank.

©2024 CDM Smith
All Rights Reserved

SECTION 013100 - PROJECT MANAGEMENT AND COORDINATION

PART 1 - GENERAL

1.1 RELATED DOCUMENTS

A. Drawings and general provisions of the Contract, including General and Supplementary Conditions and other Division 01 Specification Sections, apply to this Section.

1.2 SUMMARY

A. Section includes administrative provisions for coordinating construction operations on Project, including, but not limited to, the following:

1. General coordination procedures.
2. Coordination drawings.
3. RFIs.
4. Digital project management procedures.
5. Project meetings.

B. Each contractor shall participate in coordination requirements. Certain areas of responsibility are assigned to a specific contractor.

C. Related Requirements:

1. Section 017300 "Execution" for procedures for coordinating general installation and field-engineering services, including establishment of benchmarks and control points.
2. Section 017700 "Closeout Procedures" for coordinating closeout of the Contract.
3. Section 019113 "General Commissioning Requirements" for coordinating the Work with Owner's Commissioning Authority.

1.3 DEFINITIONS

A. RFI: Request for Information. Request from Owner, Engineer, or Contractor seeking information required by or clarifications of the Contract Documents.

1.4 INFORMATIONAL SUBMITTALS

A. Subcontract List: Prepare a written summary identifying individuals or firms proposed for each portion of the Work, including those who are to furnish products or equipment fabricated to a special design. Include the following information in tabular form:

1. Name, address, telephone number, and email address of entity performing subcontract or supplying products.
2. Number and title of related Specification Section(s) covered by subcontract.
3. Drawing number and detail references, as appropriate, covered by subcontract.

B. Key Personnel Names: Within 15 days of starting construction operations, submit a list of key personnel assignments, including superintendent and other personnel in attendance at Project site. Identify individuals and their duties and responsibilities; list addresses, cellular telephone numbers, and e-mail addresses. Provide names, addresses, and telephone numbers of individuals assigned as alternates in the absence of individuals assigned to Project.

1. Post copies of list in Project meeting room, in temporary field office, and in prominent location inbuilt facility. Keep list current at all times.

1.5 GENERAL COORDINATION PROCEDURES

A. Coordination: Coordinate construction operations included in different Sections of the Specifications to ensure efficient and orderly installation of each part of the Work. Coordinate construction operations included in different Sections that depend on each other for proper installation, connection, and operation.

1. Schedule construction operations in sequence required to obtain the best results, where installation of one part of the Work depends on installation of other components, before or after its own installation.
2. Coordinate installation of different components to ensure maximum performance and accessibility for required maintenance, service, and repair.
3. Make adequate provisions to accommodate items scheduled for later installation.

B. Prepare memoranda for distribution to each party involved, outlining special procedures required for coordination. Include such items as required notices, reports, and list of attendees at meetings.

1. Prepare similar memoranda for Owner and separate contractors if coordination of their Work is required.

C. Administrative Procedures: Coordinate scheduling and timing of required administrative procedures with other construction activities to avoid conflicts and to ensure orderly progress of the Work. Such administrative activities include, but are not limited to, the following:

1. Preparation of Contractor's construction schedule.
2. Preparation of the schedule of values.
3. Installation and removal of temporary facilities and controls.
4. Delivery and processing of submittals.
5. Progress meetings.
6. Preinstallation conferences.
7. Project closeout activities.
8. Startup and adjustment of systems.

1.6 REQUEST FOR INFORMATION (RFI)

A. General: Immediately on discovery of the need for additional information, clarification, or interpretation of the Contract Documents, Contractor shall prepare and submit an RFI in the form specified.

1. Engineer will return without response those RFIs submitted to Engineer by other entities controlled by Contractor.
2. Coordinate and submit RFIs in a prompt manner to avoid delays in Contractor's work or work of subcontractors.

B. Content of the RFI: Include a detailed, legible description of item needing information or interpretation and the following:

1. Project name.
2. Owner name.
3. Owner's Project number.
4. Name of Engineer.
5. Engineer's Project number.
6. Date.
7. Name of Contractor.
8. RFI number, numbered sequentially.
9. RFI subject.
10. Specification Section number and title and related paragraphs, as appropriate.
11. Drawing number and detail references, as appropriate.
12. Field dimensions and conditions, as appropriate.
13. Contractor's suggested resolution. If Contractor's suggested resolution impacts the Contract Time or the Contract Sum, Contractor shall state impact in the RFI.
14. Contractor's signature.
15. Attachments: Include sketches, descriptions, measurements, photos, Product Data, Shop Drawings, coordination drawings, and other information necessary to fully describe items needing interpretation.

    a. Include dimensions, thicknesses, structural grid references, and details of affected materials, assemblies, and attachments on attached sketches.

C. Engineer's Action: Engineer will review each RFI, determine action required, and respond. Allow seven days for Engineer's response for each RFI. RFIs received by Engineer after 1:00 p.m. will be considered as received the following working day.

1. The following Contractor-generated RFIs will be returned without action:

    a. Requests for approval of submittals.
    b. Requests for approval of substitutions.
    c. Requests for approval of Contractor's means and methods.
    d. Requests for coordination information already indicated in the Contract Documents.
    e. Requests for adjustments in the Contract Time or the Contract Sum.
    f. Requests for interpretation of Engineer's actions on submittals.
    g. Incomplete RFIs or inaccurately prepared RFIs.

2. Engineer's action may include a request for additional information, in which case Engineer's time for response will date from time of receipt by Engineer of additional information.
3. Engineer's action on RFIs that may result in a change to the Contract Time or the Contract Sum may be eligible for Contractor to submit Change Proposal.

a. If Contractor believes the RFI response warrants change in the Contract Time or the Contract Sum, notify Engineer in writing within 5 days of receipt of the RFI response.

D. RFI Log: Prepare, maintain, and submit a tabular log of RFIs organized by the RFI number.

1.7 PROJECT MEETINGS

A. General: Schedule and conduct meetings and conferences at Project site unless otherwise indicated.

1. Attendees: Inform participants and others involved, and individuals whose presence is required, of date and time of each meeting. Notify Owner and Engineer of scheduled meeting dates and times a minimum of 10 working days prior to meeting.
2. Agenda: Prepare the meeting agenda. Distribute the agenda to all invited attendees.
3. Minutes: Entity responsible for conducting meeting will record significant discussions and agreements achieved. Distribute the meeting minutes to everyone concerned, including Owner and Engineer, within three days of the meeting.

B. Preconstruction Conference: Engineer will schedule and conduct a preconstruction conference before starting construction, at a time convenient to Owner and Engineer, but no later than 15 days after execution of the Agreement.

C. Project Closeout Conference: Schedule and conduct a project closeout conference, at a time convenient to Owner and Engineer, but no later than 90 days prior to the scheduled date of Substantial Completion.

1. Conduct the conference to review requirements and responsibilities related to Project closeout.
2. Attendees: Authorized representatives of Owner, Engineer, and their consultants; Contractor and its superintendent; major subcontractors; suppliers; and other concerned parties shall attend the meeting. Participants at the meeting shall be familiar with Project and authorized to conclude matters relating to the Work.
3. Agenda: Discuss items of significance that could affect or delay Project closeout, including the following:

a. Preparation of Record Documents.
b. Procedures required prior to inspection for Substantial Completion and for final inspection for acceptance.
c. Submittal of written warranties.
d. Requirements for completing sustainable design documentation.
e. Requirements for preparing operations and maintenance data.
f. Requirements for delivery of material samples, attic stock, and spare parts.
g. Requirements for demonstration and training.
h. Preparation of Contractor's punch list.
i. Procedures for processing Applications for Payment at Substantial Completion and for final payment including final change order.
j. Submittal procedures.
k. Coordination of separate contracts.

l. Owner's partial occupancy requirements including certificate of occupancy and closeout of permits.
m. Installation of Owner's furniture, fixtures, and equipment.
n. Responsibility for removing temporary facilities and controls.
o. Final cleaning.

4. Minutes: Entity conducting meeting will record and distribute meeting minutes.

D. Progress Meetings: Conduct progress meetings at monthly intervals.

1. Coordinate dates of meetings with preparation of payment requests.
2. Attendees: In addition to representatives of Owner and Engineer, each contractor, subcontractor, supplier, and other entity concerned with current progress or involved in planning, coordination, or performance of future activities shall be represented at these meetings. All participants at the meeting shall be familiar with Project and authorized to conclude matters relating to the Work.
3. Agenda: Review and correct or approve minutes of previous progress meeting. Review other items of significance that could affect progress. Include topics for discussion as appropriate to status of Project.

a. Contractor's Construction Schedule: Review progress since the last meeting. Determine whether each activity is on time, ahead of schedule, or behind schedule, in relation to Contractor's construction schedule. Determine how construction behind schedule will be expedited; secure commitments from parties involved to do so. Discuss whether schedule revisions are required to ensure that current and subsequent activities will be completed within the Contract Time.

1) Review schedule for next period.

b. Review present and future needs of each entity present, including the following:

1) Interface requirements.
2) Sequence of operations.
3) Status of submittals.
4) Deliveries.
5) Off-site fabrication.
6) Access.
7) Site use.
8) Temporary facilities and controls.
9) Progress cleaning.
10) Quality and work standards.
11) Status of correction of deficient items.
12) Field observations.
13) Status of RFIs.
14) Status of Proposal Requests.
15) Pending changes.
16) Status of Change Orders.
17) Pending claims and disputes.
18) Documentation of information for payment requests.

4. Minutes: Entity responsible for conducting the meeting will record and distribute the meeting minutes to each party present and to parties requiring information.

    a. Schedule Updating: Revise Contractor's construction schedule after each progress meeting, where revisions to the schedule have been made or recognized. Issue revised schedule concurrently with the report of each meeting.

PART 2 - Coordination Meetings: Conduct Project coordination meetings at regular intervals. Project coordination meetings are in addition to specific meetings held for other purposes, such as progress meetings.PRODUCTS (NOT USED)

PART 3 - EXECUTION (NOT USED)

END OF SECTION 013100

©2024 CDM Smith
All Rights Reserved

SECTION 013233 - PHOTOGRAPHIC DOCUMENTATION

PART 1 - GENERAL

1.1 RELATED DOCUMENTS

A. Drawings and general provisions of the Contract, including General and Supplementary Conditions and other Division 01 Specification Sections, apply to this Section.

1.2 SUMMARY

A. Section includes administrative and procedural requirements for the following:

1. Aerial and preconstruction photographs.
2. Concealed Work photographs.
3. Periodic construction photographs.
4. Final Completion construction photographs.
5. Preconstruction video recordings.
6. Periodic construction video recordings.

B. Related Requirements:

1. Section 017700 "Closeout Procedures" for submitting photographic documentation as Project Record Documents at Project closeout.
2. Section 017900 "Demonstration and Training" for submitting video recordings of demonstration of equipment and training of Owner's personnel.
3. Section G3 "Site Clearing" for related information.

1.3 INFORMATIONAL SUBMITTALS

A. Key Plan: Submit key plan of Project site and building with notation of vantage points marked for location and direction of each photograph and video recording. Indicate elevation or story of construction. Include same information as corresponding photographic documentation.

B. Digital Photographs: Submit image files within three days of taking photographs.

1. Submit photos by uploading to web-based Project management software site. Include copy of key plan indicating each photograph's location and direction.
2. Identification: Provide the following information with each image description in web-based Project management software site:

a. Name of Project.
b. Name and contact information for photographer.
c. Name of Engineer.
d. Name of Contractor.
e. Date photograph was taken.
f. Description of location, vantage point, and direction.

g. Unique sequential identifier keyed to accompanying key plan.

1.4 QUALITY ASSURANCE

A. Photographer Qualifications: An individual who has been regularly engaged as a professional photographer of construction projects for not less than three years.

B. Construction Webcam Service Provider: A firm specializing in providing photographic equipment, web-based software, and related services for construction projects, with a record of providing satisfactory services similar to those required for Project.

1.5 FORMATS AND MEDIA

A. Digital Photographs: Provide color images in JPG format, produced by a digital camera with minimum sensor size of 12 megapixels, and at an image resolution of not less than 3200 by 2400 pixels, and with vibration-reduction technology. Use flash in low light levels or backlit conditions.

B. Digital Video Recordings: Provide high-resolution, digital video in MPEG format, produced by a digital camera with minimum sensor resolution of 12 megapixels and capable of recording in full high-definition mode with vibration-reduction technology. Provide supplemental lighting in low light levels or backlit conditions.

C. Digital Images: Submit digital media as originally recorded in the digital camera, without alteration, manipulation, editing, or modifications using image-editing software.

D. Metadata: Record accurate date and time from camera.

E. File Names: Name media files with date, Project area and sequential numbering suffix.

F. Usage Rights

1. Obtain and transfer copyright usage rights from photographer and videographer to Owner for unlimited reproduction of photographic and videographic documentation.

1.6 CONSTRUCTION PHOTOGRAPHS

A. Photographer: Engage a qualified photographer to take construction photographs.

B. General: Take photographs with maximum depth of field and in focus.

1. Maintain key plan with each set of construction photographs that identifies each photographic location.

C. Preconstruction Photographs: Before commencement of the Work take photographs of Project site and surrounding properties, including existing items to remain during construction, from different vantage points, as directed by Engineer.

1. Flag excavation areas and construction limits before taking construction photographs.

2. Take 20 photographs to show existing conditions adjacent to property before starting the Work.
3. Take additional photographs as required to record settlement or cracking of adjacent structures, pavements, and improvements.

D. Concealed Work Photographs: Before proceeding with installing work that will conceal other work, take photographs sufficient in number, with annotated descriptions, to record nature and location of concealed Work, including, but not limited to, the following:
1. Underground utilities.
2. Underslab services.
3. Piping.
4. Electrical conduit.
5. Waterproofing and weather-resistant barriers.
6. Filters during installation before and after the underdrains are installed. Inside the Disinfection basin prior to filling the tank with water.

E. Periodic Construction Photographs: Take 50 photographs monthly coinciding with the cutoff date associated with each Application for Payment. Select vantage points to show status of construction and progress since last photographs were taken.

F. Final Completion Construction Photographs: Take at least 100 photographs after date of Substantial Completion (for each Substantial Completion milestone) for submission as Project Record Documents. Engineer will inform photographer of desired vantage points.

G. Additional Photographs: Engineer may request photographs in addition to periodic photographs specified. Additional photographs will be paid for by Change Order and are not included in the Contract Sum.

1. Three days' notice will be given, where feasible.
2. In emergency situations, take additional photographs within 24 hours of request.
3. Circumstances that could require additional photographs include, but are not limited to, the following:

a. Special events planned at Project site.
b. Immediate follow-up when on-site events result in construction damage or losses.
c. Photographs shall be taken at fabrication locations away from Project site. These photographs are not subject to unit prices or unit-cost allowances.
d. Substantial Completion of a major phase or component of the Work.
e. Extra record photographs at time of final acceptance.
f. Owner's request for special publicity photographs.

PART 2 - PRODUCTS (NOT USED)

PART 3 - EXECUTION (NOT USED)

END OF SECTION 013233

This page intentionally left blank.

©2024 CDM Smith
All Rights Reserved

SECTION 013300 - SUBMITTAL PROCEDURES

PART 1 - GENERAL

1.1 RELATED DOCUMENTS

A. Drawings and general provisions of the Contract, including General and Supplementary Conditions and other Division 01 Specification Sections, apply to this Section.

1.2 SUMMARY

A. Section Includes:

1. Submittal schedule requirements.
2. Administrative and procedural requirements for submittals.

B. Related Requirements:

1. Section 013100 "Project Management and Coordination" for submitting coordination drawings and subcontract list and for requirements for web-based Project software.
2. Section 013233 "Photographic Documentation" for submitting preconstruction photographs, periodic construction photographs, and Final Completion construction photographs.
3. Section 014000 "Quality Requirements" for submitting test and inspection reports, and schedule of tests and inspections.
4. Section 017700 "Closeout Procedures" for submitting closeout submittals and maintenance material submittals.
5. Section 017823 "Operation and Maintenance Data" for submitting operation and maintenance manuals.
6. Section 017900 "Demonstration and Training" for submitting video recordings of demonstration of equipment and training of Owner's personnel.

1.3 DEFINITIONS

A. Action Submittals: Written and graphic information and physical samples that require Engineer's responsive action. Action submittals are those submittals indicated in individual Specification Sections as "action submittals."

B. Informational Submittals: Written and graphic information and physical samples that do not require Engineer's responsive action. Submittals may be rejected for not complying with requirements. Informational submittals are those submittals indicated in individual Specification Sections as "informational submittals."

C. Mass Submittals: Six or more submittals or items in one day or 15 or more submittals or items in one week.

1.4 SUBMITTAL SCHEDULE

A. Submittal Schedule: Submit, as an action submittal, a list of submittals, arranged in chronological order by dates required by construction schedule. Include time required for review, ordering, manufacturing, fabrication, and delivery when establishing dates. Include additional time required for making corrections or revisions to submittals noted by Engineer and additional time for handling and reviewing submittals required by those corrections.

1. Coordinate submittal schedule with list of subcontracts, the schedule of values, and Contractor's construction schedule.
2. Initial Submittal Schedule: Submit concurrently with startup construction schedule. Include submittals required during the first 60 days of construction. List those submittals required to maintain orderly progress of the Work and those required early because of long lead time for manufacture or fabrication.
3. Final Submittal Schedule: Submit concurrently with the first complete submittal of Contractor's construction schedule.

    a. Submit revised submittal schedule as required to reflect changes in current status and timing for submittals.

4. Format: Arrange the following information in a tabular format:

    a. Scheduled date for first submittal.
    b. Specification Section number and title.
    c. Submittal Category: Action; informational.
    d. Name of subcontractor.
    e. Description of the Work covered.
    f. Scheduled date for Engineer's final release or approval.
    g. Scheduled dates for purchasing.
    h. Scheduled date of fabrication.
    i. Scheduled dates for installation.
    j. Activity or event number.

1.5 SUBMITTAL FORMATS

A. Numbering System: Utilize the following example submittal identification numbering system to identify submittals and as file names for PDF submissions:

1. First Identifier - Alphabet Character: D, S, M or I which represents Shop Drawing (including working drawings and product data), Sample, Manual (Operating & Maintenance) or Informational, respectively.
2. Second Identifier - Next 6 or 8 Digits: Applicable Specification Section Number. Do not mix submittals from different specification sections into a single submittal.
3. Third Identifier - Next Three Digits: Sequential number of each separate item or drawing submitted under each Specification Section, in chronological order submitted, starting at 001.
4. Fourth Identifier - Last Alphabet Character: A to Z, indicating the submission (or resubmission) of the same submittal, i.e., "A" = 1st submission, "B" = 2nd submission, "C" = 3rd submission, etc.
5. EXAMPLE: D-033000.13-008-B.

a. D = Shop Drawing.
b. 03 30 00.13 = Section; use only 6 digits for sections that do not include 8 digits.
c. 008 = the eighth different submittal under this Section.
d. B = the second submission (first resubmission) of that particular shop drawing.

B. Submittal Information: Include the following information in each submittal:

1. Project name.
2. Date.
3. Name of Engineer.
4. Name of Contractor.
5. Name of firm or entity that prepared submittal.
6. Names of subcontractor, manufacturer, and supplier.
7. Unique submittal number, including revision identifier. Include Specification Section number with sequential alphanumeric identifier and alphanumeric suffix for resubmittals.
8. Category and type of submittal.
9. Submittal purpose and description.
10. Number and title of Specification Section, with paragraph number and generic name for each of multiple items.
11. Drawing number and detail references, as appropriate.
12. Indication of full or partial submittal.
13. Location(s) where product is to be installed, as appropriate.
14. Other necessary identification.
15. Remarks.
16. Signature of transmitter.

C. Options: Identify options requiring selection by Engineer.

D. Deviations and Additional Information: On each submittal, clearly indicate deviations from requirements in the Contract Documents, including minor variations and limitations; include relevant additional information and revisions, other than those requested by Engineer on previous submittals. Indicate by highlighting on each submittal or noting on attached separate sheet.

E. Paper Submittals: For Operation and Maintenance Manuals only.

1. Place a permanent label or title block on each submittal item for identification; include name of firm or entity that prepared submittal.
2. Provide a space approximately 6 by 8 inches on label or beside title block to record Contractor's review and approval markings and action taken by Engineer.

F. Submittals Utilizing Web-Based Project Software: Prepare submittals as PDF files or other format indicated by Project management software.

1.6 SUBMITTAL PROCEDURES

A. Prepare and submit submittals required by individual Specification Sections. Types of submittals are indicated in individual Specification Sections.

1. Web-Based Project Management Software: Project Mates. ***Contractor is responsible for the cost of using this software for construction documentation tracking for the project including up to three users with the City and three additional users with CDM Smith.***
2. Prepare submittals in PDF form, and upload to web-based Project management software website. Enter required data in web-based software site to fully identify submittal.

B. Coordination: Coordinate preparation and processing of submittals with performance of construction activities.

1. Coordinate each submittal with fabrication, purchasing, testing, delivery, other submittals, and related activities that require sequential activity.
2. Submit all submittal items required for each Specification Section concurrently unless partial submittals for portions of the Work are indicated on approved submittal schedule.
3. Submit action submittals and informational submittals required by the same Specification Section as separate packages under separate transmittals.
4. Coordinate transmittal of submittals for related parts of the Work specified in different Sections, so processing will not be delayed because of need to review submittals concurrently for coordination.

    a. Engineer reserves the right to withhold action on a submittal requiring coordination with other submittals until related submittals are received.

C. Processing Time: Allow time for submittal review, including time for resubmittals, as follows. Time for review shall commence on Engineer's receipt of submittal. No extension of the Contract Time will be authorized because of failure to transmit submittals enough in advance of the Work to permit processing, including resubmittals.

1. Initial Review: Allow 30 days for initial review of each submittal. Allow additional time if coordination with subsequent submittals is required. Engineer will advise Contractor when a submittal being processed must be delayed for coordination.
2. Intermediate Review: If intermediate submittal is necessary, process it in same manner as initial submittal.
3. Resubmittal Review: Allow 30 working days for review of each resubmittal.

D. Resubmittals: Make resubmittals in same form and number of copies as initial submittal.

1. Note date and content of previous submittal.
2. Note date and content of revision in label or title block and clearly indicate extent of revision.
3. Resubmit submittals until they are marked with approval notation from Engineer's action stamp.
4. Repetitive Reviews: Shop drawings, O&M manuals, and other submittals will be reviewed no more than twice at the Owner's expense. All subsequent reviews will be performed at the Contractor's expense. Reimburse the Owner for all costs invoiced by Engineer for the third and subsequent reviews.

E. Distribution: Furnish copies of final submittals to manufacturers, subcontractors, suppliers, fabricators, installers, authorities having jurisdiction, and others as necessary for performance of construction activities. Show distribution on transmittal forms.

F. Use for Construction: Retain complete copies of submittals on Project site. Use only final action submittals that are marked with approval notation from Engineer's action stamp.

1.7 SUBMITTAL REQUIREMENTS

A. Product Data: Collect information into a single submittal for each element of construction and type of product or equipment.

1. If information must be specially prepared for submittal because standard published data are unsuitable for use, submit as Shop Drawings, not as Product Data.
2. Mark each copy of each submittal to show which products and options are applicable.
3. Include the following information, as applicable:

   a. Manufacturer's catalog cuts.
   b. Manufacturer's product specifications.
   c. Standard color charts.
   d. Statement of compliance with specified referenced standards.
   e. Testing by recognized testing agency.
   f. Application of testing agency labels and seals.
   g. Notation of coordination requirements.
   h. Availability and delivery time information.

4. For equipment, include the following in addition to the above, as applicable:

   a. Wiring diagrams that show factory-installed wiring.
   b. Printed performance curves.
   c. Operational range diagrams.
   d. Clearances required to other construction, if not indicated on accompanying Shop Drawings.

5. Submit Product Data before Shop Drawings, and before or concurrently with Samples.

B. Shop Drawings: Prepare Project-specific information, drawn accurately to scale. Do not base Shop Drawings on reproductions of the Contract Documents or standard printed data unless submittal based on Engineer's digital data drawing files is otherwise permitted.

1. Preparation: Fully illustrate requirements in the Contract Documents. Include the following information, as applicable:

   a. Identification of products.
   b. Schedules.
   c. Compliance with specified standards.
   d. Notation of coordination requirements.
   e. Notation of dimensions established by field measurement.
   f. Relationship and attachment to adjoining construction clearly indicated.
   g. Seal and signature of professional engineer if specified.

C. Samples: Submit Samples for review of type, color, pattern, and texture for a check of these characteristics with other materials.

1. Transmit Samples that contain multiple, related components such as accessories together in one submittal package.
2. Identification: Permanently attach label on unexposed side of Samples that includes the following:

a. Project name and submittal number.
b. Generic description of Sample.
c. Product name and name of manufacturer.
d. Sample source.
e. Number and title of applicable Specification Section.
f. Specification paragraph number and generic name of each item.

3. Web-Based Project Management Software: Prepare submittals in PDF form, and upload to web-based Project software website. Enter required data in web-based software site to fully identify submittal.
4. Disposition: Maintain sets of approved Samples at Project site, available for quality-control comparisons throughout the course of construction activity. Sample sets may be used to determine final acceptance of construction associated with each set.

   a. Samples that may be incorporated into the Work are indicated in individual Specification Sections. Such Samples must be in an undamaged condition at time of use.
   b. Samples not incorporated into the Work, or otherwise designated as Owner's property, are the property of Contractor.
5. Samples for Initial Selection: Submit manufacturer's color charts consisting of units or sections of units, showing the full range of colors, textures, and patterns available.

   a. Number of Samples: Submit two full set(s) of available choices where color, pattern, texture, or similar characteristics are required to be selected from manufacturer's product line. Engineer will return submittal with options selected.
6. Samples for Verification: Submit full-size units or Samples of size indicated, prepared from same material to be used for the Work, cured and finished in manner specified, and physically identical with material or product proposed for use, and that show full range of color and texture variations expected. Samples include, but are not limited to, the following: partial sections of manufactured or fabricated components; small cuts or containers of materials; complete units of repetitively used materials; swatches showing color, texture, and pattern; color range sets; and components used for independent testing and inspection.

   a. Number of Samples: Submit two sets of Samples. Engineer will retain one Sample set; remainder will be returned.

      1) Submit a single Sample where assembly details, workmanship, fabrication techniques, connections, operation, and other similar characteristics are to be demonstrated.
      2) If variation in color, pattern, texture, or other characteristic is inherent in material or product represented by a Sample, submit at least three sets of paired units that show approximate limits of variations.

D. Product Schedule: As required in individual Specification Sections, prepare a written summary indicating types of products required for the Work and their intended location. Include the following information in tabular form:

1. Type of product. Include unique identifier for each product indicated in the Contract Documents or assigned by Contractor if none is indicated.
2. Manufacturer and product name, and model number if applicable.
3. Number and name of room or space.

4. Location within room or space.

E. Qualification Data: Prepare written information that demonstrates capabilities and experience of firm or person. Include lists of completed projects with project names and addresses, contact information of architects and owners, and other information specified.

F. Design Data: Prepare and submit written and graphic information indicating compliance with indicated performance and design criteria in individual Specification Sections. Include list of assumptions and summary of loads. Include load diagrams if applicable. Provide name and version of software, if any, used for calculations. Number each page of submittal.

G. Certificates:

1. Certificates and Certifications Submittals: Submit a statement that includes signature of entity responsible for preparing certification. Certificates and certifications shall be signed by an officer or other individual authorized to sign documents on behalf of that entity. Provide a notarized signature where indicated.
2. Contractor's Certification: Each shop drawing, working drawing, product data, and sample shall have affixed to it the following Certification Statement:

   a. "Certification Statement: by this submittal, I hereby represent that I have determined and verified all field measurements, field construction criteria, materials, dimensions, catalog numbers and similar data and I have checked and coordinated each item with other applicable approved shop drawings and all Contract requirements. "

3. Installer Certificates: Submit written statements on manufacturer's letterhead, certifying that Installer complies with requirements in the Contract Documents and, where required, is authorized by manufacturer for this specific Project.
4. Manufacturer Certificates: Submit written statements on manufacturer's letterhead, certifying that manufacturer complies with requirements in the Contract Documents. Include evidence of manufacturing experience where required.
5. Material Certificates: Submit written statements on manufacturer's letterhead certifying that material complies with requirements in the Contract Documents.
6. Product Certificates: Submit written statements on manufacturer's letterhead certifying that product complies with requirements in the Contract Documents.
7. Welding Certificates: Prepare written certification that welding procedures and personnel comply with requirements in the Contract Documents. Submit record of AWS B2.1/B2.1M on AWS forms. Include names of firms and personnel certified.

H. Test and Research Reports:

1. Compatibility Test Reports: Submit reports written by a qualified testing agency, on testing agency's standard form, indicating and interpreting results of compatibility tests performed before installation of product. Include written recommendations for substrate preparation and primers required.
2. Field Test Reports: Submit written reports indicating and interpreting results of field tests performed either during installation of product or after product is installed in its final location, for compliance with requirements in the Contract Documents.

3. Material Test Reports: Submit reports written by a qualified testing agency, on testing agency's standard form, indicating and interpreting test results of material for compliance with requirements in the Contract Documents.
4. Preconstruction Test Reports: Submit reports written by a qualified testing agency, on testing agency's standard form, indicating and interpreting results of tests performed before installation of product, for compliance with performance requirements in the Contract Documents.
5. Product Test Reports: Submit written reports indicating that current product produced by manufacturer complies with requirements in the Contract Documents. Base reports on evaluation of tests performed by manufacturer and witnessed by a qualified testing agency, or on comprehensive tests performed by a qualified testing agency.
6. Research Reports: Submit written evidence, from a model code organization acceptable to authorities having jurisdiction, that product complies with building code in effect for Project. Include the following information:

    a. Name of evaluation organization.
    b. Date of evaluation.
    c. Time period when report is in effect.
    d. Product and manufacturers' names.
    e. Description of product.
    f. Test procedures and results.
    g. Limitations of use.

1.8 DELEGATED-DESIGN SERVICES

A. Performance and Design Criteria: Where professional design services or certifications by a design professional are specifically required of Contractor by the Contract Documents, provide products and systems complying with specific performance and design criteria indicated.

    1. If criteria indicated are insufficient to perform services or certification required, submit a written request for additional information to Engineer.

B. Delegated-Design Services Certification: In addition to Shop Drawings, Product Data, and other required submittals, submit digitally signed PDF file paper copies of certificate, signed and sealed by the responsible design professional, for each product and system specifically assigned to Contractor to be designed or certified by a design professional.

    1. Indicate that products and systems comply with performance and design criteria in the Contract Documents. Include list of codes, loads, and other factors used in performing these services.

1.9 PROPOSED PRODUCT LIST

A. Within 15 days after date of Notice to Proceed, submit list of major products proposed for use, with name of manufacturer, trade name, and model number of each product.

B. For products specified only by reference standards, indicate manufacturer, trade name, model or catalog designation, and reference standards.

1.10 CONTRACTOR'S REVIEW

A. Action Submittals and Informational Submittals: Review each submittal and check for coordination with other Work of the Contract and for compliance with the Contract Documents. Note corrections and field dimensions. Mark with approval stamp before submitting to Engineer.

B. Contractor Responsible for:

1. Determination and verification of materials including manufacturer’s catalog numbers.
2. Determination and verification of field measurements and field construction criteria.
3. Checking and coordinating information in submittal with requirements of Work and of Contract Documents.
4. Determination of accuracy and completeness of dimensions and quantities.
5. Confirmation and coordination of dimensions and field conditions at Site.
6. Construction means, techniques, sequences, and procedures.
7. Safety precautions.
8. Coordination and performance of Work of all trades.
9. Other requirements enumerated in Contract Documents.

C. Contractor's Approval: Indicate Contractor's approval for each submittal with indication in web-based Project management software. Include name of reviewer, date of Contractor's approval, and statement certifying that submittal has been reviewed, checked, and approved for compliance with the Contract Documents.

1. Engineer will not review submittals received from Contractor that do not have Contractor's review and approval.

1.11 ENGINEER'S REVIEW

A. Do not make mass submittals to Engineer. If mass submittals are received, Engineer's review time stated above will be extended as necessary to perform proper review. Engineer will review mass submittals based on priority determined by Engineer after consultation with Owner and Contractor.

B. Action Submittals: Engineer will review each submittal, indicate corrections or revisions required, and return.

1. Submittals by Web-Based Project Management Software: Engineer will indicate, on Project management software website, the appropriate action.

C. Informational Submittals: Engineer will review each submittal and will not return it, or will return it if it does not comply with requirements. Engineer will forward each submittal to appropriate party.

D. Partial submittals prepared for a portion of the Work will be reviewed when use of partial submittals has received prior approval from Engineer.

E. Incomplete submittals are unacceptable, will be considered nonresponsive, and will be returned for resubmittal without review.

F. Engineer will return without review submittals received from sources other than Contractor.

G. Submittals not required by the Contract Documents will be returned by Engineer without action.

H. Shop drawings will be returned to the Contractor with one of the following codes.

1. "APPROVED" - This code is assigned when there are no notations or comments on the submittal. When returned under this code the Contractor may release the equipment and/or material for manufacture.
2. "APPROVED AS NOTED" - This code is assigned when a confirmation of the notations and comments IS NOT required by the Contractor. The Contractor may release the equipment or material for manufacture; however, all notations and comments must be incorporated into the final product.
3. "APPROVED AS NOTED/RESUBMIT" - This combination of codes is assigned when notations and comments are extensive enough to require a resubmittal of the package. The Contractor may release the equipment or material for manufacture; however, all notations and comments must be incorporated into the final product. The resubmittal is to address all comments, omissions and non-conforming items that were noted. An additional box is checked to indicate whether the resubmission is for the complete package, or for parts of the package. If no box is checked, a complete resubmittal shall be provided. Review code may designate if a partial or full submittal is required. If full submittal is required, a complete resubmittal package addressing all comments shall be provided. If a partial submittal is designated, resubmittal shall only include information pertaining to those items noted in review comments requiring clarification and any portions of submittal impacted as a result of the response. Resubmittal is to be received by the Engineer within 30 calendar days of the date of the Engineer's transmittal requiring the resubmittal.
4. "REJECTED" - This code is assigned when the submittal does not meet the intent of the Contract Documents. The Contractor must resubmit the entire package revised to bring the submittal into conformance. It may be necessary to resubmit using a different manufacturer/vendor to meet the requirements of the Contract Documents.
5. "RECEIPT ACKNOWLEDGED (Not subject to Engineer's Approval)" - This code is assigned to acknowledge receipt of a submittal that is not subject to the Engineer's approval. This code is generally used with submittals involving the Contractor’s means and methods of construction work plans, and health and safety plans.

1.12 ELECTRONIC CAD FILES OF PROJECT DRAWINGS

A. Electronic CAD Files of Project Drawings: May only be used to expedite production of Shop Drawings for the Project. Use for other Projects or purposes is not allowed.

B. Electronic CAD Files of Project Drawings: Distributed only under the following conditions:

1. Use of files is solely at receiver's risk. Engineer does not warrant accuracy of files. Receiving files in electronic form does not relieve receiver of responsibilities for measurements, dimensions, and quantities set forth in Contract Documents. In the event of ambiguity, discrepancy, or conflict between information on electronic media and that in Contract Documents, notify Engineer of discrepancy and use information in hard-copy Drawings and Specifications.

2. CAD files do not necessarily represent the latest Contract Documents, existing conditions, and as-built conditions. Receiver is responsible for determining and complying with these conditions and for incorporating addenda and modifications.
3. User is responsible for removing information not normally provided on Shop Drawings and removing references to Contract Documents. Shop Drawings submitted with information associated with other trades or with references to Contract Documents will not be reviewed and will be immediately returned.
4. Receiver shall not hold Engineer responsible for data or file clean-up required to make files usable, nor for error or malfunction in translation, interpretation, or use of this electronic information.
5. Receiver shall understand that even though Engineer has computer virus scanning software to detect presence of computer viruses, there is no guarantee that computer viruses are not present in files or in electronic media.
6. Receiver shall not hold Engineer responsible for such viruses or their consequences, and shall hold Engineer harmless against costs, losses, or damage caused by presence of computer virus in files or media.

PART 2 - PRODUCTS (NOT USED)

PART 3 - EXECUTION (NOT USED)

END OF SECTION 013300

This page intentionally left blank.

©2024 CDM Smith
All Rights Reserved

SECTION 014000 - QUALITY REQUIREMENTS

PART 1 - GENERAL

1.1 RELATED DOCUMENTS

A. Drawings and general provisions of the Contract, including General and Supplementary Conditions and other Division 01 Specification Sections, apply to this Section.

1.2 SUMMARY

A. Section includes administrative and procedural requirements for quality assurance and quality control.

B. Testing and inspection services are required to verify compliance with requirements specified or indicated. These services do not relieve Contractor of responsibility for compliance with the Contract Document requirements.
   1. Specific quality-assurance and quality-control requirements for individual work results are specified in their respective Specification Sections. Requirements in individual Sections may also cover production of standard products.
   2. Specified tests, inspections, and related actions do not limit Contractor's other quality-assurance and quality-control procedures that facilitate compliance with the Contract Document requirements.
   3. Requirements for Contractor to provide quality-assurance and quality-control services required by Engineer, Owner or authorities having jurisdiction are not limited by provisions of this Section.

1.3 DEFINITIONS

A. Experienced: When used with an entity or individual, "experienced," unless otherwise further described, means having successfully completed a minimum of five previous projects similar in nature, size, and extent to this Project; being familiar with special requirements indicated; and having complied with requirements of authorities having jurisdiction.

B. Field Quality-Control Tests and Inspections: Tests and inspections that are performed on-site for installation of the Work and for completed Work.

C. Installer/Applicator/Erector: Contractor or another entity engaged by Contractor as an employee, subcontractor, or sub-subcontractor, to perform a particular construction operation, including installation, erection, application, assembly, and similar operations.

   1. Use of trade-specific terminology in referring to a Work result does not require that certain construction activities specified apply exclusively to specific trade(s).

D. Preconstruction Testing: Tests and inspections performed specifically for Project before products and materials are incorporated into the Work, to verify performance or compliance

with specified criteria. Unless otherwise indicated, copies of reports of tests or inspections performed for other than the Project do not meet this definition.

E. Product Tests: Tests and inspections that are performed by a nationally recognized testing laboratory (NRTL) according to 29 CFR 1910.7, by a testing agency accredited according to NIST's National Voluntary Laboratory Accreditation Program (NVLAP), or by a testing agency qualified to conduct product testing and acceptable to authorities having jurisdiction, to establish product performance and compliance with specified requirements.

F. Source Quality-Control Tests and Inspections: Tests and inspections that are performed at the source (e.g., plant, mill, factory, or shop).

G. Testing Agency: An entity engaged to perform specific tests, inspections, or both. The term “testing laboratory” shall have the same meaning as the term “testing agency.”

H. Quality-Assurance Services: Activities, actions, and procedures performed before and during execution of the Work, to guard against defects and deficiencies and substantiate that proposed construction will comply with requirements.

I. Quality-Control Services: Tests, inspections, procedures, and related actions during and after execution of the Work, to evaluate that actual products incorporated into the Work and completed construction comply with requirements. Contractor's quality-control services do not include contract administration activities performed by Engineer.

1.4 DELEGATED-DESIGN SERVICES

A. Performance and Design Criteria: Where professional design services or certifications by a design professional are specifically required of Contractor by the Contract Documents, provide products and systems complying with specific performance and design criteria indicated.

1. If criteria indicated are not sufficient to perform services or certification required, submit a written request for additional information to Engineer.

B. Delegated-Design Services Statement: Submit a statement signed and sealed by the responsible design professional, for each product and system specifically assigned to Contractor to be designed or certified by a design professional, indicating that the products and systems are in compliance with performance and design criteria indicated. Include list of codes, loads, and other factors used in performing these services.

1.5 CONFLICTING REQUIREMENTS

A. Conflicting Standards and Other Requirements: If compliance with two or more standards or requirements is specified and the standards or requirements establish different or conflicting requirements for minimum quantities or quality levels, inform the Engineer regarding the conflict and obtain clarification prior to proceeding with the Work. Refer conflicting requirements that are different, but apparently equal, to Engineer for clarification before proceeding.

B. Minimum Quantity or Quality Levels: The quantity or quality level shown or specified shall be the minimum provided or performed. The actual installation may comply exactly with the minimum quantity or quality specified, or it may exceed the minimum within reasonable limits. To comply with these requirements, indicated numeric values are minimum or maximum, as appropriate, for the context of requirements. Refer uncertainties to Engineer for a decision before proceeding.

1.6 INFORMATIONAL SUBMITTALS

A. Contractor's Quality-Control Plan: For quality-assurance and quality-control activities and responsibilities.

B. Qualification Data: For Contractor's quality-control personnel.

C. Contractor's Statement of Responsibility: When required by authorities having jurisdiction, submit copy of written statement of responsibility submitted to authorities having jurisdiction before starting work on the following systems:

1. Seismic-force-resisting system, designated seismic system, or component listed in the Statement of Special Inspections.
2. Primary wind-force-resisting system or a wind-resisting component listed in the Statement of Special Inspections.

D. Testing Agency Qualifications: For testing agencies specified in "Quality Assurance" Article to demonstrate their capabilities and experience. Include proof of qualifications in the form of a recent report on the inspection of the testing agency by a recognized authority.

E. Schedule of Tests and Inspections: Prepare in tabular form and include the following:

1. Specification Section number and title.
2. Entity responsible for performing tests and inspections.
3. Description of test and inspection.
4. Identification of applicable standards.
5. Identification of test and inspection methods.
6. Number of tests and inspections required.
7. Time schedule or time span for tests and inspections.
8. Requirements for obtaining samples.
9. Unique characteristics of each quality-control service.

F. Reports: Prepare and submit certified written reports and documents as specified.

G. Permits, Licenses, and Certificates: For Owner's record, submit copies of permits, licenses, certifications, inspection reports, releases, jurisdictional settlements, notices, receipts for fee payments, judgments, correspondence, records, and similar documents established for compliance with standards and regulations bearing on performance of the Work.

1.7 CONTRACTOR'S QUALITY-CONTROL PLAN

A. Quality-Control Plan, General: Submit quality-control plan within 10 days of Notice of Award]. Submit in format acceptable to Engineer. Identify personnel, procedures, controls, instructions, tests, records, and forms to be used to carry out Contractor's quality-assurance and quality-control responsibilities and to coordinate Owner's quality-assurance and quality-control activities. Coordinate with Contractor's Construction Schedule.

B. Submittal Procedure: Describe procedures for ensuring compliance with requirements through review and management of submittal process. Indicate qualifications of personnel responsible for submittal review.

C. Testing and Inspection: In quality-control plan, include a comprehensive schedule of Work requiring testing or inspection, including the following:

1. Contractor-performed tests and inspections, including subcontractor-performed tests and inspections. Include required tests and inspections and Contractor-elected tests and inspections. Distinguish source quality-control tests and inspections from field quality-control tests and inspections.
2. Special inspections required by authorities having jurisdiction and indicated on the Statement of Special Inspections.
3. Owner-performed tests and inspections indicated in the Contract Documents.

D. Continuous Inspection of Workmanship: Describe process for continuous inspection during construction to identify and correct deficiencies in workmanship in addition to testing and inspection specified. Indicate types of corrective actions to be required to bring the Work into compliance with standards of workmanship established by Contract requirements and approved mockups.

E. Monitoring and Documentation: Maintain testing and inspection reports including log of approved and rejected results. Include Work Engineer has indicated as nonconforming or defective. Indicate corrective actions taken to bring nonconforming Work into compliance with requirements. Comply with requirements of authorities having jurisdiction.

1.8 REPORTS AND DOCUMENTS

A. Test and Inspection Reports: Prepare and submit certified written reports specified in other Sections. Include the following:

1. Date of issue.
2. Project title and number.
3. Name, address, telephone number, and email address of testing agency.
4. Dates and locations of samples and tests or inspections.
5. Names of individuals making tests and inspections.
6. Description of the Work and test and inspection method.
7. Identification of product and Specification Section.
8. Complete test or inspection data.
9. Test and inspection results and an interpretation of test results.
10. Record of temperature and weather conditions at time of sample-taking and testing and inspection.

11. Comments or professional opinion on whether tested or inspected Work complies with the Contract Document requirements.
12. Name and signature of laboratory inspector.
13. Recommendations on retesting and reinspecting.

B. Manufacturer's Technical Representative's Field Reports: Prepare written information documenting manufacturer's technical representative's tests and inspections specified in other Sections. Include the following:

1. Name, address, telephone number, and email address of technical representative making report.
2. Statement on condition of substrates and their acceptability for installation of product.
3. Statement that products at Project site comply with requirements.
4. Summary of installation procedures being followed, whether they comply with requirements and, if not, what corrective action was taken.
5. Results of operational and other tests and a statement of whether observed performance complies with requirements.
6. Statement of whether conditions, products, and installation will affect warranty.
7. Other required items indicated in individual Specification Sections.

C. Factory-Authorized Service Representative's Reports: Prepare written information documenting manufacturer's factory-authorized service representative's tests and inspections specified in other Sections. Include the following:

1. Name, address, telephone number, and email address of factory-authorized service representative making report.
2. Statement that equipment complies with requirements.
3. Results of operational and other tests and a statement of whether observed performance complies with requirements.
4. Statement of whether conditions, products, and installation will affect warranty.
5. Other required items indicated in individual Specification Sections.

1.9 QUALITY ASSURANCE

A. Qualifications paragraphs in this article establish the minimum qualification levels required; individual Specification Sections specify additional requirements.

B. Manufacturer Qualifications: A firm experienced in manufacturing products or systems similar to those indicated for this Project and with a record of successful in-service performance, as well as sufficient production capacity to produce required units. As applicable, procure products from manufacturers able to meet qualification requirements, warranty requirements, and technical or factory-authorized service representative requirements.

C. Fabricator Qualifications: A firm experienced in producing products similar to those indicated for this Project and with a record of successful in-service performance, as well as sufficient production capacity to produce required units.

D. Installer Qualifications: A firm or individual experienced in installing, erecting, applying, or assembling work similar in material, design, and extent to that indicated for this Project, whose work has resulted in construction with a record of successful in-service performance.

E. Professional Engineer Qualifications: A professional engineer who is legally qualified to practice in jurisdiction where Project is located and who is experienced in providing engineering services of the kind indicated. Engineering services are defined as those performed for installations of the system, assembly, or product that is similar in material, design, and extent to those indicated for this Project.

F. Specialists: Certain Specification Sections require that specific construction activities shall be performed by entities who are recognized experts in those operations. Specialists shall satisfy qualification requirements indicated and shall be engaged in the activities indicated.

1. Requirements of authorities having jurisdiction shall supersede requirements for specialists.

G. Testing and Inspecting Agency Qualifications: An NRTL, an NVLAP, or an independent agency with the experience and capability to conduct testing and inspection indicated, as documented in accordance with ASTM E329**,** and with additional qualifications specified in individual Sections; and, where required by authorities having jurisdiction, that is acceptable to authorities.

H. Manufacturer's Technical Representative Qualifications: An authorized representative of manufacturer who is trained and approved by manufacturer to observe and inspect, demonstrate, repair and perform service on installations of manufacturer's products that are similar in material, design, and extent to those indicated for this Project.

I. Factory-Authorized Service Representative Qualifications: An authorized representative of manufacturer who is trained and approved by manufacturer to inspect installation of manufacturer's products that are similar in material, design, and extent to those indicated for this Project.

1.10 QUALITY CONTROL

A. Owner Responsibilities: Where quality-control services are indicated as Owner's responsibility, Owner will engage a qualified testing agency to perform these services.

1. Owner will furnish Contractor with names, addresses, and telephone numbers of testing agencies engaged and a description of types of testing and inspection they are engaged to perform.
2. Costs for retesting and reinspecting construction that replaces or is necessitated by Work that failed to comply with the Contract Documents will be charged to Contractor.

B. Contractor Responsibilities: Tests and inspections not explicitly assigned to Owner are Contractor's responsibility. Perform additional quality-control activities, whether specified or not, to verify and document that the Work complies with requirements.

1. Unless otherwise indicated, provide quality-control services specified and those required by authorities having jurisdiction. Perform quality-control services required of Contractor by authorities having jurisdiction, whether specified or not.
2. Engage a qualified testing agency to perform quality-control services.

a. Contractor shall not employ same entity engaged by Owner, unless agreed to in writing by Owner.

3. Notify testing agencies at least 24 hours in advance of time when Work that requires testing or inspection will be performed.
4. Where quality-control services are indicated as Contractor's responsibility, submit a certified written report, in duplicate, of each quality-control service.
5. Testing and inspection requested by Contractor and not required by the Contract Documents are Contractor's responsibility.
6. Submit additional copies of each written report directly to authorities having jurisdiction, when they so direct.

C. Retesting/Reinspecting: Regardless of whether original tests or inspections were Contractor's responsibility, provide quality-control services, including retesting and reinspecting, for construction that replaced Work that failed to comply with the Contract Documents.

D. Testing Agency Responsibilities: Cooperate with Engineer and Contractor in performance of duties. Provide qualified personnel to perform required tests and inspections.

1. Notify Engineer and Contractor promptly of irregularities or deficiencies observed in the Work during performance of its services.
2. Determine the locations from which test samples will be taken and in which in-situ tests are conducted.
3. Conduct and interpret tests and inspections and state in each report whether tested and inspected Work complies with or deviates from requirements.
4. Submit a certified written report, in duplicate, of each test, inspection, and similar quality-control service through Contractor.
5. Do not release, revoke, alter, or increase the Contract Document requirements or approve or accept any portion of the Work.
6. Do not perform duties of Contractor.

E. Manufacturer's Field Services: Where indicated, engage a factory-authorized service representative to inspect field-assembled components and equipment installation, including service connections. Report results in writing as specified in Section 013300 "Submittal Procedures."

F. Manufacturer's Technical Services: Where indicated, engage a manufacturer's technical representative to observe and inspect the Work. Manufacturer's technical representative's services include participation in preinstallation conferences, examination of substrates and conditions, verification of materials, observation of Installer activities, inspection of completed portions of the Work, and submittal of written reports.

G. Contractor’s Associated Requirements and Services: Cooperate with agencies and representatives performing required tests, inspections, and similar quality-control services, and provide reasonable auxiliary services as requested. Notify agency sufficiently in advance of operations to permit assignment of personnel. Provide the following:

1. Access to the Work.
2. Incidental labor and facilities necessary to facilitate tests and inspections.
3. Adequate quantities of representative samples of materials that require testing and inspection. Assist agency in obtaining samples.

4. Facilities for storage and field curing of test samples.
5. Delivery of samples to testing agencies.
6. Preliminary design mix proposed for use for material mixes that require control by testing agency.
7. Security and protection for samples and for testing and inspection equipment at Project site.

H. Coordination: Coordinate sequence of activities to accommodate required quality-assurance and quality-control services with a minimum of delay and to avoid necessity of removing and replacing construction to accommodate testing and inspection.

1. Schedule times for tests, inspections, obtaining samples, and similar activities.

I. Schedule of Tests and Inspections: Prepare a schedule of tests, inspections, and similar quality-control services required by the Contract Documents. Coordinate and submit concurrently with Contractor's Construction Schedule. Update and submit with each Application for Payments.

1. Schedule Contents: Include tests, inspections, and quality-control services, including Contractor- and Owner-retained services, commissioning activities, and other Project-required services paid for by other entities.
2. Distribution: Distribute schedule to Owner, Engineer testing agencies, and each party involved in performance of portions of the Work where tests and inspections are required.

PART 2 - PRODUCTS (NOT USED)

PART 3 - EXECUTION

3.1 TEST AND INSPECTION LOG

A. Test and Inspection Log: Prepare a record of tests and inspections. Include the following:

1. Date test or inspection was conducted.
2. Description of the Work tested or inspected.
3. Date test or inspection results were transmitted to Engineer.
4. Identification of testing agency or special inspector conducting test or inspection.

B. Maintain log at Project site. Post changes and revisions as they occur. Provide access to test and inspection log for Engineer's and authorities' having jurisdiction reference during normal working hours.

1. Submit log at Project closeout as part of Project Record Documents.

3.2 REPAIR AND PROTECTION

A. General: On completion of testing, inspection, sample taking, and similar services, repair damaged construction and restore substrates and finishes.

1. Provide materials and comply with installation requirements specified in other Specification Sections or matching existing substrates and finishes. Restore patched areas and extend restoration into adjoining areas with durable seams that are as invisible as possible. Comply with the Contract Document requirements for cutting and patching in Section 017300 "Execution."

B. Protect construction exposed by or for quality-control service activities.

C. Repair and protection are Contractor's responsibility, regardless of the assignment of responsibility for quality-control services.

END OF SECTION 014000

This page intentionally left blank.

©2024 CDM Smith
All Rights Reserved

SECTION 014200 - REFERENCES

PART 1 - GENERAL

1.1 RELATED DOCUMENTS

A. Drawings and general provisions of the Contract, including General and Supplementary Conditions and other Division 01 Specification Sections, apply to this Section.

1.2 DEFINITIONS

A. General: Basic Contract definitions are included in the Conditions of the Contract.

B. "Approved": When used to convey Engineer's action on Contractor's submittals, applications, and requests, "approved" is limited to Engineer's duties and responsibilities as stated in the Conditions of the Contract.

C. "Directed": A command or instruction by Engineer. Other terms including "requested," "authorized," "selected," "required," and "permitted" have the same meaning as "directed."

D. "Indicated": Requirements expressed by graphic representations or in written form on Drawings, in Specifications, and in other Contract Documents. Other terms including "shown," "noted," "scheduled," and "specified" have the same meaning as "indicated."

E. "Regulations": Laws, ordinances, statutes, and lawful orders issued by authorities having jurisdiction, and rules, conventions, and agreements within the construction industry that control performance of the Work.

F. "Furnish": Supply and deliver to Project site, ready for unloading, unpacking, assembly, installation, and similar operations.

G. "Install": Unload, temporarily store, unpack, assemble, erect, place, anchor, apply, work to dimension, finish, cure, protect, clean, and similar operations at Project site.

H. "Provide": Furnish and install, complete and ready for the intended use.

I. "Project Site": Space available for performing construction activities. The extent of Project site is shown on Drawings and may or may not be identical with the description of the land on which Project is to be built.

1.3 INDUSTRY STANDARDS

A. Applicability of Standards: Unless the Contract Documents include more stringent requirements, applicable construction industry standards have the same force and effect as if bound or copied directly into the Contract Documents to the extent referenced. Such standards are made a part of the Contract Documents by reference.

B. Publication Dates: Comply with standards in effect as of date of the Contract Documents unless otherwise indicated.

C. Copies of Standards: Each entity engaged in construction on Project should be familiar with industry standards applicable to its construction activity. Copies of applicable standards are not bound with the Contract Documents.

1. Where copies of standards are needed to perform a required construction activity, obtain copies directly from publication source.

1.4 ABBREVIATIONS AND ACRONYMS

A. Industry Organizations: Where abbreviations and acronyms are used in Specifications or other Contract Documents, they shall mean the recognized name of the entities indicated in Gale's "Encyclopedia of Associations: National Organizations of the U.S." or in Columbia Books' "National Trade & Professional Associations of the United States."

B. Industry Organizations: Where abbreviations and acronyms are used in Specifications or other Contract Documents, they shall mean the recognized name of the entities in the following list. The information in this list is subject to change and is believed to be accurate as of the date of the Contract Documents.

1. AABC - Associated Air Balance Council; www.aabc.com.
2. AAMA - American Architectural Manufacturers Association; www.aamanet.org.
3. AAPFCO - Association of American Plant Food Control Officials; www.aapfco.org.
4. AASHTO - American Association of State Highway and Transportation Officials; www.transportation.org.
5. AATCC - American Association of Textile Chemists and Colorists; www.aatcc.org.
6. ABMA - American Bearing Manufacturers Association; www.americanbearings.org.
7. ABMA - American Boiler Manufacturers Association; www.abma.com.
8. ACI - American Concrete Institute; (Formerly: ACI International); www.concrete.org
9. ACPA - American Concrete Pipe Association; www.concrete-pipe.org.
10. AEIC - Association of Edison Illuminating Companies, Inc. (The); www.aeic.org.
11. AF&PA - American Forest & Paper Association; www.afandpa.org.
12. AGA - American Gas Association; www.aga.org.
13. AGMA- American Gear Manufacturers Association, Inc.
14. AHAM - Association of Home Appliance Manufacturers; www.aham.org.
15. AHRI - Air-Conditioning, Heating, and Refrigeration Institute (The); www.ahrinet.org.
16. AI - Asphalt Institute; www.asphaltinstitute.org.
17. AIA - American Institute of Architects (The); www.aia.org.
18. AISC - American Institute of Steel Construction; www.aisc.org.
19. AISI - American Iron and Steel Institute; www.steel.org.
20. AITC - American Institute of Timber Construction; www.aitc-glulam.org.
21. AMCA - Air Movement and Control Association International, Inc.; www.amca.org.
22. ANSI - American National Standards Institute; www.ansi.org.
23. AOSA - Association of Official Seed Analysts, Inc.; www.aosaseed.com.
24. APA - APA - The Engineered Wood Association; www.apawood.org.
25. APA - Architectural Precast Association; www.archprecast.org.
26. API - American Petroleum Institute; www.api.org.
27. ARI - Air-Conditioning & Refrigeration Institute; (See AHRI).

28. ARI - American Refrigeration Institute; (See AHRI).
29. ARMA - Asphalt Roofing Manufacturers Association; www.asphaltroofing.org.
30. ASCE - American Society of Civil Engineers; www.asce.org.
31. ASCE/SEI - American Society of Civil Engineers/Structural Engineering Institute; (See ASCE).
32. ASHRAE - American Society of Heating, Refrigerating and Air-Conditioning Engineers; www.ashrae.org.
33. ASME - ASME International; (American Society of Mechanical Engineers); www.asme.org.
34. ASSE - American Society of Safety Engineers (The); www.asse.org.
35. ASSE - American Society of Sanitary Engineering; www.asse-plumbing.org.
36. ASTM - ASTM International; www.astm.org.
37. ATIS - Alliance for Telecommunications Industry Solutions; www.atis.org.
38. AWEA - American Wind Energy Association; www.awea.org.
39. AWI - Architectural Woodwork Institute; www.awinet.org.
40. AWMAC - Architectural Woodwork Manufacturers Association of Canada; www.awmac.com.
41. AWPA - American Wood Protection Association; www.awpa.com.
42. AWS - American Welding Society; www.aws.org.
43. AWWA - American Water Works Association; www.awwa.org.
44. BHMA - Builders Hardware Manufacturers Association; www.buildershardware.com.
45. BIA - Brick Industry Association (The); www.gobrick.com.
46. BICSI - BICSI, Inc.; www.bicsi.org.
47. BIFMA - BIFMA International; (Business and Institutional Furniture Manufacturer's Association); www.bifma.org.
48. BISSC - Baking Industry Sanitation Standards Committee; www.bissc.org.
49. BWF - Badminton World Federation; (Formerly: International Badminton Federation); www.bissc.org.
50. CDA - Copper Development Association; www.copper.org.
51. CE - Conformite Europeenne; http://ec.europa.eu/growth/single-market/ce-marking/
52. CEA - Canadian Electricity Association; www.electricity.ca.
53. CEA - Consumer Electronics Association; www.ce.org.
54. CFFA - Chemical Fabrics and Film Association, Inc.; www.chemicalfabricsandfilm.com.
55. CFSEI - Cold-Formed Steel Engineers Institute; www.cfsei.org.
56. CGA - Compressed Gas Association; www.cganet.com.
57. CIMA - Cellulose Insulation Manufacturers Association; www.cellulose.org.
58. CISCA - Ceilings & Interior Systems Construction Association; www.cisca.org.
59. CISPI - Cast Iron Soil Pipe Institute; www.cispi.org.
60. CLFMI - Chain Link Fence Manufacturers Institute; www.chainlinkinfo.org.
61. CPA - Composite Panel Association; www.pbmdf.com.
62. CRI - Carpet and Rug Institute (The); www.carpet-rug.org.
63. CRRC - Cool Roof Rating Council; www.coolroofs.org.
64. CRSI - Concrete Reinforcing Steel Institute; www.crsi.org.
65. CSA - CSA Group; www.csagroup.com.
66. CSA - CSA International; www.csa-international.org.
67. CSI - Construction Specifications Institute (The); www.csinet.org.
68. CSSB - Cedar Shake & Shingle Bureau; www.cedarbureau.org.
69. CTI - Cooling Technology Institute; (Formerly: Cooling Tower Institute); www.cti.org.
70. CWC - Composite Wood Council; (See CPA).
71. DASMA - Door and Access Systems Manufacturers Association; www.dasma.com.
72. DHI - Door and Hardware Institute; www.dhi.org.

73. ECA - Electronic Components Association; (See ECIA).
74. ECAMA - Electronic Components Assemblies & Materials Association; (See ECIA).
75. ECIA - Electronic Components Industry Association; www.eciaonline.org.
76. EIA - Electronic Industries Alliance; (See TIA).
77. EIMA - EIFS Industry Members Association; www.eima.com.
78. EJMA - Expansion Joint Manufacturers Association, Inc.; www.ejma.org.
79. ESD - ESD Association; (Electrostatic Discharge Association); www.esda.org .
80. ESTA - Entertainment Services and Technology Association; (See PLASA).
81. ETL - Intertek (See Intertek); www.intertek.com.
82. EVO - Efficiency Valuation Organization; www.evo-world.org.
83. FCI - Fluid Controls Institute; www.fluidcontrolsinstitute.org.
84. FIBA - Federation Internationale de Basketball; (The International Basketball Federation); www.fiba.com.
85. FIVB - Federation Internationale de Volleyball; (The International Volleyball Federation); www.fivb.org.
86. FM Approvals - FM Approvals LLC; www.fmglobal.com.
87. FM Global - FM Global; (Formerly: FMG - FM Global); www.fmglobal.com.
88. FRSA - Florida Roofing, Sheet Metal & Air Conditioning Contractors Association, Inc.; www.floridaroof.com.
89. FSA - Fluid Sealing Association; www.fluidsealing.com.
90. FSC - Forest Stewardship Council U.S.; www.fscus.org.
91. GA - Gypsum Association; www.gypsum.org.
92. GANA - Glass Association of North America; www.glasswebsite.com.
93. GS - Green Seal; www.greenseal.org.
94. HI - Hydraulic Institute; www.pumps.org.
95. HI/GAMA - Hydronics Institute/Gas Appliance Manufacturers Association; (See AHRI).
96. HMMA - Hollow Metal Manufacturers Association; (See NAAMM).
97. HPVA - Hardwood Plywood & Veneer Association; www.hpva.org.
98. HPW - H. P. White Laboratory, Inc.; www.hpwhite.com.
99. IAPSC - International Association of Professional Security Consultants; www.iapsc.org.
100. IAS - International Accreditation Service; www.iasonline.org.
101. ICBO - International Conference of Building Officials; (See ICC).
102. ICC - International Code Council; www.iccsafe.org.
103. ICEA - Insulated Cable Engineers Association, Inc.; www.icea.net.
104. ICPA - International Cast Polymer Alliance; www.icpa-hq.org.
105. ICRI - International Concrete Repair Institute, Inc.; www.icri.org.
106. IEC - International Electrotechnical Commission; www.iec.ch.
107. IEEE - Institute of Electrical and Electronics Engineers, Inc. (The); www.ieee.org.
108. IES - Illuminating Engineering Society; (Formerly: Illuminating Engineering Society of North America); www.ies.org.
109. IESNA - Illuminating Engineering Society of North America; (See IES).
110. IEST - Institute of Environmental Sciences and Technology; www.iest.org.
111. IGMA - Insulating Glass Manufacturers Alliance; www.igmaonline.org.
112. IGSHPA - International Ground Source Heat Pump Association; www.igshpa.okstate.edu.
113. ILI - Indiana Limestone Institute of America, Inc.; www.iliai.com.
114. Intertek - Intertek Group; (Formerly: ETL SEMCO; Intertek Testing Service NA); www.intertek.com.
115. ISA - International Society of Automation (The); (Formerly: Instrumentation, Systems, and Automation Society); www.isa.org.
116. ISAS - Instrumentation, Systems, and Automation Society (The); (See ISA).

117. ISFA - International Surface Fabricators Association; (Formerly: International Solid Surface Fabricators Association); www.isfanow.org.
118. ISO - International Organization for Standardization; www.iso.org.
119. ISSFA - International Solid Surface Fabricators Association; (See ISFA).
120. ITU - International Telecommunication Union; www.itu.int/home.
121. KCMA - Kitchen Cabinet Manufacturers Association; www.kcma.org.
122. LMA - Laminating Materials Association; (See CPA).
123. LPI - Lightning Protection Institute; www.lightning.org.
124. MBMA - Metal Building Manufacturers Association; www.mbma.com.
125. MCA - Metal Construction Association; www.metalconstruction.org.
126. MFMA - Maple Flooring Manufacturers Association, Inc.; www.maplefloor.org.
127. MFMA - Metal Framing Manufacturers Association, Inc.; www.metalframingmfg.org.
128. MHIA - Material Handling Industry of America; www.mhia.org.
129. MIA - Marble Institute of America; www.marble-institute.com.
130. MMPA - Moulding & Millwork Producers Association; www.wmmpa.com.
131. MPI - Master Painters Institute; www.paintinfo.com.
132. MSS - Manufacturers Standardization Society of The Valve and Fittings Industry Inc.; www.mss-hq.org.
133. NAAMM - National Association of Architectural Metal Manufacturers; www.naamm.org.
134. NACE - NACE International; (National Association of Corrosion Engineers International); www.nace.org.
135. NADCA - National Air Duct Cleaners Association; www.nadca.com.
136. NAIMA - North American Insulation Manufacturers Association; www.naima.org.
137. NBGQA - National Building Granite Quarries Association, Inc.; www.nbgqa.com.
138. NBI - New Buildings Institute; www.newbuildings.org.
139. NCAA - National Collegiate Athletic Association (The); www.ncaa.org.
140. NCMA - National Concrete Masonry Association; www.ncma.org.
141. NEBB - National Environmental Balancing Bureau; www.nebb.org.
142. NECA - National Electrical Contractors Association; www.necanet.org.
143. NeLMA - Northeastern Lumber Manufacturers Association; www.nelma.org.
144. NEMA - National Electrical Manufacturers Association; www.nema.org.
145. NETA - InterNational Electrical Testing Association; www.netaworld.org.
146. NFHS - National Federation of State High School Associations; www.nfhs.org.
147. NFPA - National Fire Protection Association; www.nfpa.org.
148. NFPA - NFPA International; (See NFPA).
149. NFRC - National Fenestration Rating Council; www.nfrc.org.
150. NHLA - National Hardwood Lumber Association; www.nhla.com.
151. NLGA - National Lumber Grades Authority; www.nlga.org.
152. NOFMA - National Oak Flooring Manufacturers Association; (See NWFA).
153. NOMMA - National Ornamental & Miscellaneous Metals Association; www.nomma.org.
154. NRCA - National Roofing Contractors Association; www.nrca.net.
155. NRMCA - National Ready Mixed Concrete Association; www.nrmca.org.
156. NSF - NSF International; www.nsf.org.
157. NSPE - National Society of Professional Engineers; www.nspe.org.
158. NSSGA - National Stone, Sand & Gravel Association; www.nssga.org.
159. NTMA - National Terrazzo & Mosaic Association, Inc. (The); www.ntma.com.
160. NWFA - National Wood Flooring Association; www.nwfa.org.
161. PCI - Precast/Prestressed Concrete Institute; www.pci.org.
162. PDI - Plumbing & Drainage Institute; www.pdionline.org.

163. PLASA - PLASA; (Formerly: ESTA - Entertainment Services and Technology Association); www.plasa.org.
164. RCSC - Research Council on Structural Connections; www.boltcouncil.org.
165. RFCI - Resilient Floor Covering Institute; www.rfci.com.
166. RIS - Redwood Inspection Service; www.redwoodinspection.com.
167. SAE - SAE International; www.sae.org.
168. SCTE - Society of Cable Telecommunications Engineers; www.scte.org.
169. SDI - Steel Deck Institute; www.sdi.org.
170. SDI - Steel Door Institute; www.steeldoor.org.
171. SEFA - Scientific Equipment and Furniture Association (The); www.sefalabs.com.
172. SEI/ASCE - Structural Engineering Institute/American Society of Civil Engineers; (See ASCE).
173. SIA - Security Industry Association; www.siaonline.org.
174. SJI - Steel Joist Institute; www.steeljoist.org.
175. SMA - Screen Manufacturers Association; www.smainfo.org.
176. SMACNA - Sheet Metal and Air Conditioning Contractors' National Association; www.smacna.org.
177. SMPTE - Society of Motion Picture and Television Engineers; www.smpte.org.
178. SPFA - Spray Polyurethane Foam Alliance; www.sprayfoam.org.
179. SPIB - Southern Pine Inspection Bureau; www.spib.org.
180. SPRI - Single Ply Roofing Industry; www.spri.org.
181. SRCC - Solar Rating & Certification Corporation; www.solar-rating.org.
182. SSINA - Specialty Steel Industry of North America; www.ssina.com.
183. SSPC - SSPC: The Society for Protective Coatings; www.sspc.org.
184. STI - Steel Tank Institute; www.steeltank.com.
185. SWI - Steel Window Institute; www.steelwindows.com.
186. SWPA - Submersible Wastewater Pump Association; www.swpa.org.
187. TCA - Tilt-Up Concrete Association; www.tilt-up.org.
188. TCNA - Tile Council of North America, Inc.; www.tileusa.com.
189. TEMA - Tubular Exchanger Manufacturers Association, Inc.; www.tema.org.
190. TIA - Telecommunications Industry Association (The); (Formerly: TIA/EIA - Telecommunications Industry Association/Electronic Industries Alliance); www.tiaonline.org.
191. TIA/EIA - Telecommunications Industry Association/Electronic Industries Alliance; (See TIA).
192. TMS - The Masonry Society; www.masonrysociety.org.
193. TPI - Truss Plate Institute; www.tpinst.org.
194. TPI - Turfgrass Producers International; www.turfgrasssod.org.
195. TRI - Tile Roofing Institute; www.tileroofing.org.
196. UL - Underwriters Laboratories Inc.; http://www.ul.com.
197. UNI - Uni-Bell PVC Pipe Association; www.uni-bell.org.
198. USAV - USA Volleyball; www.usavolleyball.org.
199. USGBC - U.S. Green Building Council; www.usgbc.org.
200. USITT - United States Institute for Theatre Technology, Inc.; www.usitt.org.
201. WA - Wallcoverings Association; www.wallcoverings.org
202. WASTEC - Waste Equipment Technology Association; www.wastec.org.
203. WCLIB - West Coast Lumber Inspection Bureau; www.wclib.org.
204. WCMA - Window Covering Manufacturers Association; www.wcmanet.org.
205. WDMA - Window & Door Manufacturers Association; www.wdma.com.
206. WI - Woodwork Institute; www.wicnet.org.
207. WSRCA - Western States Roofing Contractors Association; www.wsrca.com.

208. WWPA - Western Wood Products Association; www.wwpa.org.

C. Code Agencies: Where abbreviations and acronyms are used in Specifications or other Contract Documents, they shall mean the recognized name of the entities in the following list. This information is believed to be accurate as of the date of the Contract Documents.

1. DIN - Deutsches Institut fur Normung e.V.; www.din.de.
2. IAPMO - International Association of Plumbing and Mechanical Officials; www.iapmo.org.
3. ICC - International Code Council; www.iccsafe.org.
4. ICC-ES - ICC Evaluation Service, LLC; www.icc-es.org.

D. Federal Government Agencies: Where abbreviations and acronyms are used in Specifications or other Contract Documents, they shall mean the recognized name of the entities in the following list. Information is subject to change and is up to date as of the date of the Contract Documents.

1. COE - Army Corps of Engineers; www.usace.army.mil.
2. CPSC - Consumer Product Safety Commission; www.cpsc.gov.
3. DOC - Department of Commerce; National Institute of Standards and Technology; www.nist.gov.
4. DOD - Department of Defense; www.quicksearch.dla.mil.
5. DOE - Department of Energy; www.energy.gov.
6. EPA - Environmental Protection Agency; www.epa.gov.
7. FAA - Federal Aviation Administration; www.faa.gov.
8. FG - Federal Government Publications; www.gpo.gov/fdsys.
9. GSA - General Services Administration; www.gsa.gov.
10. HUD - Department of Housing and Urban Development; www.hud.gov.
11. LBL - Lawrence Berkeley National Laboratory; Environmental Energy Technologies Division; www.eetd.lbl.gov.
12. OSHA - Occupational Safety & Health Administration; www.osha.gov.
13. SD - Department of State; www.state.gov.
14. TRB - Transportation Research Board; National Cooperative Highway Research Program; The National Academies; www.trb.org.
15. USDA - Department of Agriculture; Agriculture Research Service; U.S. Salinity Laboratory; www.ars.usda.gov.
16. USDA - Department of Agriculture; Rural Utilities Service; www.usda.gov.
17. USDOJ - Department of Justice; Office of Justice Programs; National Institute of Justice; www.ojp.usdoj.gov.
18. USP - U.S. Pharmacopeial Convention; www.usp.org.
19. USPS - United States Postal Service; www.usps.com.

E. Standards and Regulations: Where abbreviations and acronyms are used in Specifications or other Contract Documents, they shall mean the recognized name of the standards and regulations in the following list. This information is subject to change and is believed to be accurate as of the date of the Contract Documents.

1. CFR - Code of Federal Regulations; Available from Government Printing Office; www.gpo.gov/fdsys.
2. DOD - Department of Defense; Military Specifications and Standards; Available from DLA Document Services; www.quicksearch.dla.mil.
3. DSCC - Defense Supply Center Columbus; (See FS).

4. FED-STD - Federal Standard; (See FS).
5. FS - Federal Specification; Available from DLA Document Services; www.quicksearch.dla.mil.

    a. Available from Defense Standardization Program; www.dsp.dla.mil.
    b. Available from General Services Administration; www.gsa.gov.
    c. Available from National Institute of Building Sciences/Whole Building Design Guide; www.wbdg.org.

6. MILSPEC - Military Specification and Standards; (See DOD).
7. USAB - United States Access Board; www.access-board.gov.
8. USATBCB - U.S. Architectural & Transportation Barriers Compliance Board; (See USAB).

F. State Government Agencies: Where abbreviations and acronyms are used in Specifications or other Contract Documents, they shall mean the recognized name of the entities in the following list. This information is subject to change and is believed to be accurate as of the date of the Contract Documents.

1. CBHF; State of California; Department of Consumer Affairs; Bureau of Electronic and Appliance Repair, Home Furnishings and Thermal Insulation; www.bearhfti.ca.gov.
2. CCR; California Code of Regulations; Office of Administrative Law; California Title 24 Energy Code; www.calregs.com.
3. CDHS; California Department of Health Services; (See CDPH).
4. CDPH; California Department of Public Health; Indoor Air Quality Program; www.cal-iaq.org.
5. CPUC; California Public Utilities Commission; www.cpuc.ca.gov.
6. SCAQMD; South Coast Air Quality Management District; www.aqmd.gov.
7. TFS; Texas A&M Forest Service; Sustainable Forestry and Economic Development; www.txforestservice.tamu.edu.

PART 2 - PRODUCTS (NOT USED)

PART 3 - EXECUTION (NOT USED)

END OF SECTION 014200

©2024 CDM Smith
All Rights Reserved

SECTION 015000 - TEMPORARY FACILITIES AND CONTROLS

PART 1 - GENERAL

1.1 RELATED DOCUMENTS

A. Drawings and general provisions of the Contract, including General and Supplementary Conditions and other Division 01 Specification Sections, apply to this Section.

1.2 SUMMARY

A. Section includes requirements for temporary utilities, support facilities, and security and protection facilities.

B. Related Requirements:
   1. Section CIP3 "Summary of Work" for work restrictions and limitations on utility interruptions.

1.3 USE CHARGES

A. Installation, removal, and use charges for temporary facilities shall be included in the Contract Sum unless otherwise indicated. Allow other entities engaged in the Project to use temporary services and facilities without cost, including, but not limited to, Owner's construction forces, Engineer, occupants of Project, testing agencies, and authorities having jurisdiction.

B. Sewer Service: Pay sewer-service use charges for sewer usage by all entities for construction operations.

C. Water Service: Owner will pay for water-service use charges for water used by all entities for construction operations.

D. Electric Power Service: Pay electric-power-service use charges for electricity used by all entities for construction operations.

E. Water and Sewer Service from Existing System: Water from Owner's existing water system is available for use with metering. Provide connections and extensions of services and metering as required for construction operations.

F. Contractor shall refer to Section 00700 “Standard General Conditions of the Construction Contract” regarding permanent utilities connections.

1.4 INFORMATIONAL SUBMITTALS

A. Site Utilization Plan: Show temporary facilities, temporary utility lines and connections, staging areas, construction site entrances, vehicle circulation, and parking areas for construction personnel.

B. Implementation and Termination Schedule: Within 15 days of date established for commencement of the Work, submit schedule indicating implementation and termination dates of each temporary utility.

C. Project Identification and Temporary Signs: Refer to Specification CIP 15 “Project Identification Signage.”

D. Fire-Safety Program: Show compliance with requirements of NFPA 241 and authorities having jurisdiction. Indicate Contractor personnel responsible for management of fire-prevention program.

E. Noise and Vibration Control Plan: Identify construction activities that may impact the occupancy and use of existing spaces within the building or adjacent existing buildings, whether occupied by others, or occupied by the Owner. Include the following:

1. Methods used to meet the goals and requirements of the Owner.
2. Concrete cutting method(s) to be used.
3. Location of construction devices on the site.
4. Show compliance with the use and maintenance of quieted construction devices for the duration of the Project.
5. Indicate activities that may disturb building occupants and that are planned to be performed during non-standard working hours as coordinated with the Owner.
6. Indicate locations of sensitive equipment areas or other areas requiring special attention as identified by Owner. Indicate means for complying with Owner's requirements.

1.5 QUALITY ASSURANCE

A. Temporary facilities shall comply with all applicable state and local ordinances, codes and regulations.

B. Electric Service: Comply with NECA, NEMA, and UL standards and regulations for temporary electric service. Install service to comply with NFPA 70.

C. Tests and Inspections: Arrange for authorities having jurisdiction to test and inspect each temporary utility before use. Obtain required certifications and permits.

D. Accessible Temporary Egress: Comply with applicable provisions in 2012 Texas Accessibility Standards (TAS).

1.6 PROJECT CONDITIONS

A. Temporary Use of Permanent Facilities: Engage Installer of each permanent service to assume responsibility for operation, maintenance, and protection of each permanent service during its use as a construction facility before Owner's acceptance, regardless of previously assigned responsibilities.

PART 2 - PRODUCTS

2.1 MATERIALS

A. Temporary Chain-Link Fencing: Minimum (50-mm), (3.8-mm-) thick, galvanized-steel, chain-link fabric fencing; minimum (1.8 m) high with galvanized-steel pipe posts; minimum (60-mm-) OD line posts and (73-mm-) OD corner and pull posts, with (42-mm-) OD top rails.

B. Portable Chain-Link Fencing: Minimum (50-mm), (3.8-mm-) thick, galvanized-steel, chain-link fabric fencing; minimum (1.8 m) high with galvanized-steel pipe posts; minimum (60-mm-) OD line posts and (73-mm-) OD corner and pull posts, with (42-mm-) OD top and bottom rails. Provide concrete or galvanized-steel bases for supporting posts.

C. Dust-Control Adhesive-Surface Walk-Off Mats: Provide mats, minimum (914 by 1524 mm).

D. Insulation: Unfaced mineral-fiber blanket, manufactured from glass, slag wool, or rock wool; with maximum flame-spread and smoke-developed indexes of 25 and 50, respectively.

2.2 TEMPORARY FACILITIES

A. Field Offices: Prefabricated or mobile units with serviceable finishes, temperature controls, and foundations adequate for normal loading.

B. Storage and Fabrication Sheds: Provide sheds sized, furnished, and equipped to accommodate materials and equipment for construction operations.

1. Store combustible materials apart from building.

PART 3 - EXECUTION

3.1 TEMPORARY FACILITIES, GENERAL

A. Conservation: Coordinate construction and use of temporary facilities with consideration given to conservation of energy, water, and materials. Coordinate use of temporary utilities to minimize waste.
1. Salvage materials and equipment involved in performance of, but not actually incorporated into, the Work. See other Sections for disposition of salvaged materials that are designated as Owner's property.

3.2 INSTALLATION, GENERAL

A. Locate facilities where shown on the Drawings or where they will serve Project adequately and result in minimum interference with performance of the Work. Relocate and modify facilities as required by progress of the Work. Engineer’s trailer shall be set up and ready for occupancy within 30 days of the Notice to Proceed.

1. Locate facilities to limit site disturbance.

B. Provide each facility ready for use within 30 days of the Notice to Proceed and prior to Commencement of Work at the site. Do not remove until approved by Engineer or are replaced by authorized use of completed permanent facilities.

3.3 CONTRACTOR'S FIELD OFFICE

A. Contractor may elect to provide a temporary field office(s) for the Contractor's use.

B. Locate field office(s) in accordance with approved shop drawings and as directed by the Owner.

3.4 TEMPORARY UTILITY INSTALLATION

A. General: Install temporary service or connect to existing service, if approved by Owner.

1. Arrange with utility company, Owner, and existing users for time when service can be interrupted, if necessary, to make connections for temporary services.

B. Sewers and Drainage: Provide temporary utilities to remove effluent lawfully.

1. Connect temporary sewers to municipal system as directed by authorities having jurisdiction.

C. Water Service: If approved, connect to Owner's existing water service facilities. Clean and maintain water service facilities in a condition acceptable to Owner. At Final Completion, restore these facilities to condition existing before initial use.

D. Sanitary Facilities: Provide temporary toilets, wash facilities, safety shower and eyewash facilities, and drinking water for use of construction personnel. Comply with requirements of authorities having jurisdiction for type, number, location, operation, and maintenance of fixtures and facilities.Temporary Heating and Cooling: Provide temporary heating and cooling required by construction activities for curing or drying of completed installations or for protecting installed construction from adverse effects of low temperatures or high humidity. Select equipment that will not have a harmful effect on completed installations or elements being installed.

1. Provide temporary dehumidification systems when required to reduce ambient and substrate moisture levels to level required to allow installation or application of finishes and their proper curing or drying.

E. Temporary Light and Power: Provide by Contractor, including 220 Volt service for welding, complete with wiring, lamps and similar equipment as required to adequately light all work areas and with sufficient power capacity to meet the project needs. Make all necessary arrangements with the local electric company for temporary electric service and pay all expenses in connection therewith.

F. Electric Power Service: Provide electric power service and distribution system of sufficient size, capacity, and power characteristics required for construction operations.

1. Install electric power service underground unless otherwise indicated.

2. Coordinate with electric utility (Pedernales Electric Co-Operative and Georgetown Electric) to connect to the existing power source. Provide all necessary metering equipment and appurtenances to make the connection.

G. Lighting: Provide temporary lighting with local switching that provides adequate illumination for construction operations, observations, inspections, and traffic conditions.

1. Install and operate temporary lighting that fulfills security and protection requirements without operating entire system.

3.5 SUPPORT FACILITIES INSTALLATION

A. Comply with the following:
1. Provide construction for any temporary field offices, shops, and sheds located within construction area or within 30 feet of building lines that is noncombustible in accordance with ASTM E136. Comply with NFPA 241.
2. Utilize designated area within existing building for temporary field offices.
3. Maintain support facilities until Engineer schedules Final Completion inspection. Remove just before Final Completion.

B. Temporary Roads and Paved Areas: Construct and maintain temporary roads and paved areas adequate for construction operations. Locate temporary roads and paved areas within construction limits indicated on Drawings.

1. Provide dust-control treatment that is nonpolluting and nontracking. Reapply treatment as required to minimize dust.

C. Temporary Use of Planned Permanent Roads and Paved Areas: Locate temporary roads and paved areas in same location as permanent roads and paved areas. Construct and maintain temporary roads and paved areas adequate for construction operations. Extend temporary roads and paved areas, within construction limits indicated, as necessary for construction operations.

1. Coordinate elevations of temporary roads and paved areas with permanent roads and paved areas.
2. Prepare subgrade and install subbase and base for temporary roads and paved areas accordance with Section 312000 "Earthwork."
3. Recondition base after temporary use, including removing contaminated material, regrading, proofrolling, compacting, and testing.

D. Traffic Controls: Comply with requirements of authorities having jurisdiction.

1. Protect existing site improvements to remain including fences, curbs, pavement, and utilities.
2. Maintain access for fire-fighting equipment and access to fire hydrants.

E. Parking: Provide temporary parking areas for construction personnel.

F. Storage and Staging: Use designated areas of Project site for storage and staging needs.

G. Dewatering Facilities and Drains: Comply with requirements of authorities having jurisdiction. Maintain Project site, excavations, and construction free of water.

1. Dispose of rainwater in a lawful manner that will not result in flooding Project or adjoining properties or endanger permanent Work or temporary facilities.
2. Remove snow and ice as required to minimize accumulations.

H. Project Signs: Provide Project signs as indicated in Section CIP 15 “Project Identification Signage.”

I. Waste Disposal Facilities: Comply with requirements specified in Section 017419 "Construction Waste Management and Disposal."

J. Lifts and Hoists: Provide facilities necessary for hoisting materials and personnel.
1. Truck cranes and similar devices used for hoisting materials are considered "tools and equipment" and not temporary facilities.

K. Temporary Stairs: Until permanent stairs are available, provide temporary stairs where ladders are not adequate.

3.6 SECURITY AND PROTECTION FACILITIES INSTALLATION

A. Protection of Existing Facilities: Protect existing vegetation, equipment, structures, utilities, and other improvements at Project site and on adjacent properties, except those indicated to be removed or altered. Repair damage to existing facilities.

1. Where access to adjacent properties is required in order to affect protection of existing facilities, obtain written permission from adjacent property owner to access property for that purpose.

B. Environmental Protection: Provide protection, operate temporary facilities, and conduct construction as required to comply with environmental regulations and that minimize possible air, waterway, and subsoil contamination or pollution or other undesirable effects.

1. Comply with work restrictions specified in Section CIP3 "Summary of Work."

C. Temporary Erosion and Sedimentation Control: Comply with CIP9 “Environmental Protection Procedures."

D. Temporary Erosion and Sedimentation Control: Provide measures to prevent soil erosion and discharge of soil-bearing water runoff and airborne dust to undisturbed areas and to adjacent properties and walkways.

1. Verify that flows of water redirected from construction areas or generated by construction activity do not enter or cross tree- or plant-protection zones.
2. Inspect, repair, and maintain erosion- and sedimentation-control measures during construction until permanent vegetation has been established.
3. Clean, repair, and restore adjoining properties and roads affected by erosion and sedimentation from Project site during the course of Project.

4. Remove erosion and sedimentation controls and restore and stabilize areas disturbed during removal.

E. Stormwater Control: Comply with requirements of authorities having jurisdiction. Provide barriers in and around excavations and subgrade construction to prevent flooding by runoff of stormwater from heavy rains.

F. Tree and Plant Protection: Comply with requirements specified in Section 015639 "Temporary Tree and Plant Protection."

G. Pest Control: Engage pest-control service to recommend practices to minimize attraction and harboring of rodents, roaches, and other pests and to perform extermination and control procedures at regular intervals, so Project will be free of pests and their residues at Substantial Completion. Perform control operations lawfully, using materials approved by authorities having jurisdiction.

H. Site Enclosure Fence: Prior to commencing earthwork, furnish and install site enclosure fence in a manner that will prevent people from easily entering site except by entrance gates.

1. Extent of Fence: As indicated on Drawings.
2. Maintain security by limiting number of keys and restricting distribution to authorized personnel. Furnish one set of keys each to the Owner and Engineer's Field Representative.

I. Security Enclosure and Lockup: Install temporary enclosure around partially completed areas of construction. Provide lockable entrances to prevent unauthorized entrance, vandalism, theft, and similar violations of security. Lock entrances at end of each workday.

J. Barricades, Warning Signs, and Lights: Comply with requirements of authorities having jurisdiction for erecting structurally adequate barricades, including warning signs and lighting.

K. Temporary Egress: Provide temporary egress from existing occupied facilities as indicated and as required by authorities having jurisdiction. Provide, install and maintain signage directing occupants to temporary egress.

L. Temporary Enclosures: Provide temporary enclosures for protection of construction, in progress and completed, from exposure, foul weather, other construction operations, and similar activities. Provide temporary weathertight enclosure for building exterior.

1. Where heating or cooling is needed and permanent enclosure is incomplete, insulate temporary enclosures.

3.7 MOISTURE AND MOLD CONTROL

A. Moisture and Mold Protection: Protect stored materials and installed Work in accordance with Moisture and Mold Protection Plan.

B. Exposed Construction Period: Before installation of weather barriers, when materials are subject to wetting and exposure and to airborne mold spores, protect as follows:

1. Protect porous materials from water damage.
2. Protect stored and installed material from flowing or standing water.
3. Keep porous and organic materials from coming into prolonged contact with concrete.
4. Remove standing water from decks.
5. Keep deck openings covered or dammed.

C. Partially Enclosed Construction Period: After installation of weather barriers but before full enclosure and conditioning of building, when installed materials are still subject to infiltration of moisture and ambient mold spores, protect as follows:

1. Do not load or install drywall or other porous materials or components, or items with high organic content, into partially enclosed building.
2. Keep interior spaces reasonably clean and protected from water damage.
3. Periodically collect and remove waste containing cellulose or other organic matter.
4. Discard or replace water-damaged material.
5. Do not install material that is wet.
6. Discard and replace stored or installed material that begins to grow mold.
7. Perform work in a sequence that allows wet materials adequate time to dry before enclosing the material in gypsum board or other interior finishes.

3.8 OPERATION, TERMINATION, AND REMOVAL

A. Supervision: Enforce strict discipline in use of temporary facilities. To minimize waste and abuse, limit availability of temporary facilities to essential and intended uses.

B. Maintenance: Maintain facilities in good operating condition until removal.

1. Maintain operation of temporary enclosures, heating, cooling, humidity control, ventilation, and similar facilities on a 24-hour basis where required to achieve indicated results and to avoid possibility of damage.
2. Clear snow and ice from all drives, walks and stairs to maintain safe vehicle and pedestrian access to the site and facilities as directed by the Engineer.

C. Temporary Facility Changeover: Do not change over from using temporary security and protection facilities to permanent facilities until Final Completion.

D. Termination and Removal: Remove each temporary facility when need for its service has ended, when it has been replaced by authorized use of a permanent facility, or no later than Final Completion. Complete or, if necessary, restore permanent construction that may have been delayed because of interference with temporary facility. Repair damaged Work, clean exposed surfaces, and replace construction that cannot be satisfactorily repaired.

1. Materials and facilities that constitute temporary facilities are property of Contractor. Owner reserves right to take possession of Project identification signs.
2. Remove temporary roads and paved areas not intended for or acceptable for integration into permanent construction. Where area is intended for landscape development, remove soil and aggregate fill that do not comply with requirements for fill or subsoil. Remove materials contaminated with road oil, asphalt and other petrochemical compounds, and other substances that might impair growth of plant materials or lawns. Repair or replace

street paving, curbs, and sidewalks at temporary entrances, as required by authorities having jurisdiction.

3. Just prior to Final Completion, repair, renovate, and clean permanent facilities used during construction period. Comply with final cleaning requirements specified in Section 017700 "Closeout Procedures."

END OF SECTION 015000

This page intentionally left blank.

©2024 CDM Smith
All Rights Reserved

SECTION 015639 - TEMPORARY TREE AND PLANT PROTECTION

PART 1 - GENERAL

1.1 RELATED DOCUMENTS

A. Drawings and general provisions of the Contract, including General and Supplementary Conditions and Division 01 Specification Sections, apply to this Section.

1.2 SUMMARY

A. Section includes general protection and pruning of existing trees and plants that are affected by execution of the Work, whether temporary or permanent construction.

B. Related Requirements:

1. Section 015000 "Temporary Facilities and Controls" for temporary site fencing.
2. Section G3 "Site Clearing" for removing existing trees and shrubs.

1.3 DEFINITIONS

A. Caliper (DBH): Diameter breast height; diameter of a trunk as measured by a diameter tape or the average of the smallest and largest diameters at a height 54 inches above the ground line for trees with caliper of 8 inches or greater as measured at a height of 12 inches above the ground.

B. Plant-Protection Zone: Area surrounding individual trees, groups of trees, shrubs, or other vegetation to be protected during construction and indicated on Drawings.

C. Tree-Protection Zone: Area surrounding individual trees or groups of trees to be protected during construction, as indicated on Drawings and also defined by a circle concentric with each tree with a radius 1.5 times the diameter of the drip line unless otherwise indicated.

D. Vegetation: Trees, shrubs, groundcovers, grass, and other plants.

1.4 FIELD CONDITIONS

A. The following practices are prohibited within protection zones:

1. Storage of construction materials, debris, or excavated material.
2. Moving or parking vehicles or equipment.
3. Foot traffic.
4. Erection of sheds or structures.
5. Impoundment of water.
6. Excavation or other digging unless otherwise indicated.
7. Attachment of signs to or wrapping materials around trees or plants unless otherwise indicated.

B. Do not direct vehicle or equipment exhaust toward protection zones.

C. Prohibit heat sources, flames, ignition sources, and smoking within or near protection zones and organic mulch.

PART 2 - PRODUCTS (NOT USED)

PART 3 - EXECUTION

3.1 EXAMINATION

A. Erosion and Sedimentation Control: Examine the site to verify that temporary erosion- and sedimentation-control measures are in place. Verify that flows of water redirected from construction areas or generated by construction activity do not enter or cross protection zones.

3.2 PREPARATION

A. Locate and clearly identify trees, shrubs, and other vegetation to remain. Flag each tree trunk at 54 inches above the ground.

B. Protect tree root systems from damage caused by runoff or spillage of noxious materials while mixing, placing, or storing construction materials. Protect root systems from ponding, eroding, or excessive wetting caused by dewatering operations.

3.3 PROTECTION ZONES

A. Protection-Zone Fencing: Install protection-zone fencing along edges of protection zones before construction begins in a manner that will prevent people from easily entering protected areas. Construct fencing so as not to obstruct safe passage or visibility at vehicle intersections where fencing is located adjacent to pedestrian walkways or in close proximity to street intersections, drives, or other vehicular circulation.

B. Maintain protection zones free of weeds and trash.

C. Maintain protection-zone fencing in good condition as acceptable to Engineer and remove when construction operations are complete and equipment has been removed from the site.

1. Do not remove protection-zone fencing, even temporarily, to allow deliveries or equipment access through the protection zone.

3.4 EXCAVATION

A. General: Excavate at edge of protection zones and for trenches indicated within protection zones according to requirements in Section 312000 "Earthwork" unless otherwise indicated.

B. Trenching within Protection Zones: Where utility trenches are required within protection zones, excavate under or around tree roots by hand or with air spade, or tunnel under the roots by drilling, auger boring, or pipe jacking. Do not cut main lateral tree roots or taproots; cut only smaller roots that interfere with installation of utilities. Cut roots as required for root pruning. If excavating by hand, use narrow-tine spading forks to comb soil and expose roots.

C. Redirect roots in backfill areas where possible. If encountering large, main lateral roots, expose roots beyond excavation limits as required to bend and redirect them without breaking. If encountered immediately adjacent to location of new construction and redirection is not practical, cut roots approximately 3 inches back from new construction and as required for root pruning.

D. Do not allow exposed roots to dry out before placing permanent backfill. Provide temporary earth cover or pack with peat moss and wrap with burlap. Water and maintain in a moist condition. Temporarily support and protect roots from damage until they are permanently relocated and covered with soil.

3.5 ROOT PRUNING

A. Prune tree roots that are affected by temporary and permanent construction, as approved by local arborist. Consult local arborist and gain approval for all trees requiring root pruning prior to beginning any pruning work.

B. Root Pruning at Edge of Protection Zone: Prune tree roots 12 inches outside of the protection zone by cleanly cutting all roots to the depth of the required excavation or as approved by local arborist.

C. Root Pruning within Protection Zone: Clear and excavate by hand or with air spade to the depth of the required excavation to minimize damage to tree root systems. If excavating by hand, use narrow-tine spading forks to comb soil to expose roots. Cleanly cut roots as close to excavation as possible.

3.6 CROWN PRUNING

A. Prune branches that are affected by temporary and permanent construction as approved by local arborist. Consult local arborist and gain approval for all trees requiring crown pruning prior to beginning any pruning work.

1. Prune to remove only broken, dying, or dead branches unless otherwise indicated. Do not prune for shape unless otherwise indicated.
2. Do not remove or reduce living branches to compensate for root loss caused by damaging or cutting root system.
3. Pruning Standards: Prune trees according to ANSI A300 (Part 1).

B. Cut branches with sharp pruning instruments; do not break or chop.

C. Do not paint or apply sealants to wounds.

3.7 REGRADING

A. Lowering Grade: Where new finish grade is indicated below existing grade around trees, slope grade beyond the protection zone. Maintain existing grades within the protection zone.

B. Lowering Grade within Protection Zone: Where new finish grade is indicated below existing grade around trees, slope grade away from trees as recommended by arborist unless otherwise indicated.

   1. Root Pruning: Prune tree roots exposed by lowering the grade. Do not cut main lateral roots or taproots; cut only smaller roots. Cut roots as required for root pruning.

C. Raising Grade: Where new finish grade is indicated above existing grade around trees, slope grade beyond the protection zone. Maintain existing grades within the protection zone.

D. Minor Fill within Protection Zone: Where existing grade is 2 inches or less below elevation of finish grade, fill with backfill soil. Place backfill soil in a single uncompacted layer and hand grade to required finish elevations.

3.8 DISPOSAL OF SURPLUS AND WASTE MATERIALS

A. Disposal: Remove excess excavated material, displaced trees, trash, and debris and legally dispose of them off Owner's property.

END OF SECTION 015639

©2024 CDM Smith
All Rights Reserved

SECTION 016000 - PRODUCT REQUIREMENTS

PART 1 - GENERAL

1.1 RELATED DOCUMENTS

A. Drawings and general provisions of the Contract, including General and Supplementary Conditions and other Division 01 Specification Sections, apply to this Section.

1.2 SUMMARY

A. Section includes administrative and procedural requirements for selection of products for use in Project; product delivery, storage, and handling; manufacturers' standard warranties on products; special warranties; and comparable products.

B. Related Requirements:

1. Section CIP3 “Summary of Work” for Contractor requirements related to Owner-furnished products.
2. Section 014200 "References" for applicable industry standards for products specified.
3. Section 017700 “Closeout Procedures” for submitting warranties.

1.3 DEFINITIONS

A. Products: Items obtained for incorporating into the Work, whether purchased for Project or taken from previously purchased stock. The term "product" includes the terms "material," "equipment," "system," and terms of similar intent.

1. Named Products: Items identified by manufacturer's product name, including make or model number or other designation shown or listed in manufacturer's published product literature that is current as of date of the Contract Documents.
2. New Products: Items that have not previously been incorporated into another project or facility. Salvaged items or items reused from other projects are not considered new products. Items that are manufactured or fabricated to include recycle contract materials are considered new products, unless indicated otherwise.
3. Comparable Product: Product by named manufacturer that is demonstrated and approved through the comparable product submittal process described in Part 2 “Comparable Products” Article, to have the indicated qualities related to type, function, dimension, in-service performance, physical properties, appearance, and other characteristics that equal or exceed those of specified product.

B. Basis-of-Design Product Specification: A specification in which a single manufacturer's product is named and accompanied by the words "basis-of-design product," including make or model number or other designation. Published attributes and characteristics of basis-of-design product establish salient characteristics of products.

1. Evaluation of Comparable Products: In addition to the basis-of-design product description, product attributes and characteristics may be listed to establish the significant qualities related to type, function, in-service performance and physical properties, weight, dimension, durability, visual characteristics, and other special features and requirements for purposes of evaluating comparable products of additional manufacturers named in the specification.

C. Subject to Compliance with Requirements: Where the phrase "Subject to compliance with requirements" introduces a product selection procedure in an individual Specification Section, provide products qualified under the specified product procedure. In the event that a named product or product by a named manufacturer does not meet the other requirements of the specifications, select another named product or product from another named manufacturer that does meet the requirements of the specifications; submit a comparable product request or substitution request, if applicable.

D. Comparable Product Request Submittal: An action submittal requesting consideration of a comparable product, including the following information:

1. Identification of basis-of-design product or fabrication or installation method to be replaced, including Specification Section number and title and Drawing numbers and titles.
2. Data indicating compliance with the requirements specified in Part 2 "Comparable Products" Article.

E. Basis-of-Design Product Specification Submittal: An action submittal complying with requirements in Section 013300 "Submittal Procedures."

1.4 QUALITY ASSURANCE

A. Compatibility of Options: If Contractor is given option of selecting between two or more products for use on Project, select product compatible with products previously selected, even if previously selected products were also options.

1. Resolution of Compatibility Disputes between Multiple Contractors:

a. Contractors are responsible for providing products and construction methods compatible with products and construction methods of other contractors.
b. If a dispute arises between the multiple contractors over concurrently selectable but incompatible products, Engineer will determine which products shall be used.

B. Identification of Products: Except for required labels and operating data, do not attach or imprint manufacturer or product names or trademarks on exposed surfaces of products or equipment that will be exposed to view in occupied spaces or on the exterior.

1. Labels: Locate required product labels and stamps on a concealed surface, or, where required for observation following installation, on a visually accessible surface that is not conspicuous.
2. Equipment Nameplates: Provide a permanent nameplate on each item of service- or power-operated equipment. Locate on a visually accessible but inconspicuous surface. Include information essential for operation, including the following:

a. Name of product and manufacturer.
b. Model and serial number.
c. Capacity.
d. Speed.
e. Ratings.

1.5 COORDINATION

A. Modify or adjust affected work as necessary to integrate work of approved comparable products and approved substitutions.

1.6 PRODUCT DELIVERY, STORAGE, AND HANDLING

A. Deliver, store, and handle products, using means and methods that will prevent damage, deterioration, and loss, including theft and vandalism. Comply with manufacturer's written instructions.

B. Delivery and Handling:

1. Schedule delivery to minimize long-term storage at Project site and to prevent overcrowding of construction spaces.
2. Coordinate delivery with installation time to ensure minimum holding time for items that are flammable, hazardous, easily damaged, or sensitive to deterioration, theft, and other losses.
3. Deliver products to Project site in an undamaged condition in manufacturer's original sealed container or other packaging system, complete with labels and instructions for handling, storing, unpacking, protecting, and installing.
4. Inspect products on delivery to determine compliance with the Contract Documents and that products are undamaged and properly protected.

C. Storage:

1. Provide a secure location and enclosure at Project site for storage of materials and equipment.
2. Store products to allow for inspection and measurement of quantity or counting of units.
3. Store materials in a manner that will not endanger Project structure.
4. Store products that are subject to damage by the elements, under cover in a weathertight enclosure above ground, with ventilation adequate to prevent condensation and with adequate protection for wind.
5. Protect foam plastic from exposure to sunlight, except to extent necessary for period of installation and concealment.
6. Comply with product manufacturer's written instructions for temperature, humidity, ventilation, and weather-protection requirements for storage.
7. Protect stored products from damage and liquids from freezing.
8. Provide a secure location and enclosure at Project site for storage of materials and equipment by Owner's construction forces. Coordinate location with Owner.

1.7 PRODUCT WARRANTIES

A. Warranties specified in other Sections shall be in addition to, and run concurrent with, other warranties required by the Contract Documents. Manufacturer's disclaimers and limitations on product warranties do not relieve Contractor of obligations under requirements of the Contract Documents.

1. Manufacturer's Warranty: Written standard warranty form furnished by individual manufacturer for a particular product and issued in the name of the Owner or endorsed by manufacturer to Owner.
2. Special Warranty: Written warranty required by the Contract Documents to provide specific rights for Owner and issued in the name of the Owner or endorsed by manufacturer to Owner.

B. Special Warranties: Prepare a written document that contains appropriate terms and identification, ready for execution.

1. Manufacturer's Standard Form: Modified to include Project-specific information and properly executed.
2. Specified Form: When specified forms are included in the Project Manual, prepare a written document, using indicated form properly executed.
3. See other Sections for specific content requirements and particular requirements for submitting special warranties.

C. Submittal Time: Comply with requirements in Section 017700 "Closeout Procedures."

PART 2 - PRODUCTS

2.1 PRODUCT SELECTION PROCEDURES

A. General Product Requirements: Provide products that comply with the Contract Documents, are undamaged and, unless otherwise indicated, are new at time of installation.

1. Provide products complete with accessories, trim, finish, fasteners, and other items needed for a complete installation and indicated use and effect.
2. Standard Products: If available, and unless custom products or nonstandard options are specified, provide standard products of types that have been produced and used successfully in similar situations on other projects.
3. Owner reserves the right to limit selection to products with warranties meeting requirements of the Contract Documents.
4. Where products are accompanied by the term "as selected," Engineer will make selection.
5. Descriptive, performance, and reference standard requirements in the Specifications establish salient characteristics of products.
6. Or Equal: For products specified by name and accompanied by the term "or equal," "or approved equal," or "or approved," comply with requirements in "Comparable Products" Article to obtain approval for use of an unnamed product.

a. Submit additional documentation required by Engineer in order to establish equivalency of proposed products. Unless otherwise indicated, evaluation of "or equal" product status is by the Engineer, whose determination is final.

B. Product Selection Procedures:

1. Sole Product: Where Specifications name a single manufacturer and product, provide the named product that complies with requirements. Comparable products or substitutions for Contractor's convenience will not be considered.

   a. Sole product may be indicated by the phrase "Subject to compliance with requirements, provide the following."

2. Sole Manufacturer/Source: Where Specifications name a single manufacturer or source, provide a product by the named manufacturer or source that complies with requirements. Comparable products or substitutions for Contractor's convenience will not be considered.

   a. Sole manufacturer/source may be indicated by the phrase "Subject to compliance with requirements, provide products by the following."

3. Limited List of Products: Where Specifications include a list of names of both manufacturers and products, provide one of the products listed that complies with requirements. Comparable products or substitutions for Contractor's convenience will not be considered.

   a. Limited list of products may be indicated by the phrase "Subject to compliance with requirements, provide one of the following."

4. Non-Limited List of Products: Where Specifications include a list of names of both available manufacturers and products, provide one of the products listed, or an unnamed product that complies with requirements.

   a. Non-limited list of products is indicated by the phrase "Subject to compliance with requirements, available products that may be incorporated in the Work include, but are not limited to, the following."
   b. Provision of an unnamed product is not considered a substitution, if the product complies with requirements.

5. Limited List of Manufacturers: Where Specifications include a list of manufacturers' names, provide a product by one of the manufacturers listed that complies with requirements. Comparable products or substitutions for Contractor's convenience will not be considered.

   a. Limited list of manufacturers is indicated by the phrase "Subject to compliance with requirements, provide products by one of the following."

6. Non-Limited List of Manufacturers: Where Specifications include a list of available manufacturers, provide a product by one of the manufacturers listed, or a product by an unnamed manufacturer that complies with requirements.

a. Non-limited list of manufacturers is indicated by the phrase "Subject to compliance with requirements, available manufacturers whose products may be incorporated in the Work include, but are not limited to, the following."
b. Provision of products of an unnamed manufacturer is not considered a substitution, if the product complies with requirements.

7. Basis-of-Design Product: Where Specifications name a product, or refer to a product indicated on Drawings, and include a list of manufacturers, provide the specified or indicated product or a comparable product by one of the other named manufacturers. Drawings and Specifications may additionally indicate sizes, profiles, dimensions, and other characteristics that are based on the product named. Comply with requirements in "Comparable Products" Article for consideration of an unnamed product by one of the other named manufacturers.

2.2 COMPARABLE PRODUCTS

A. Conditions for Consideration of Comparable Products: Engineer will consider Contractor's request for comparable product when the following conditions are satisfied. If the following conditions are not satisfied, Engineer may return requests without action, except to record noncompliance the following requirements:

1. Evidence that proposed product does not require revisions to the Contract Documents, is consistent with the Contract Documents, will produce the indicated results, and is compatible with other portions of the Work.
2. Detailed comparison of significant qualities of proposed product with those of the named basis-of-design product. Significant product qualities include attributes, such as type, function, in-service performance and physical properties, weight, dimension, durability, visual characteristics, and other specific features and requirements.
3. Evidence that proposed product provides specified warranty.
4. List of similar installations for completed projects, with project names and addresses and names and addresses of Engineers and owners, if requested.
5. Samples, if requested.

B. Engineer's Action on Comparable Products Submittal: If necessary, Engineer will request additional information or documentation for evaluation, as specified in Section 013300 "Submittal Procedures."

1. Form of Approval of Submittal: As specified in Section 013300 "Submittal Procedures."
2. Use product specified if Engineer does not issue a decision on use of a comparable product request within time allocated.

C. Submittal Requirements, Two-Step Process: Approval by the Engineer of Contractor's request for use of comparable product is not intended to satisfy other submittal requirements. Comply with specified submittal requirements.

D. Submittal Requirements, Single-Step Process: When acceptable to Engineer, incorporate specified submittal requirements of individual Specification Section in combined submittal for comparable products. Approval by the Engineer of Contractor' request for use of comparable product and of individual submittal requirements will also satisfy other submittal requirements.

PART 3 - EXECUTION (NOT USED)

END OF SECTION 016000

This page intentionally left blank.

©2024 CDM Smith
All Rights Reserved

SECTION 017300 - EXECUTION

PART 1 - GENERAL

1.1 RELATED DOCUMENTS

A. Drawings and general provisions of the Contract, including General and Supplementary Conditions and other Division 01 Specification Sections, apply to this Section.

1.2 SUMMARY

A. Section includes general administrative and procedural requirements governing execution of the Work, including, but not limited to, the following:

1. Construction layout.
2. Field engineering and surveying.
3. Installation of the Work.
4. Cutting and patching.
5. Coordination of Owner's portion of the Work.
6. Coordination of Owner-installed products.
7. Progress cleaning.
8. Starting and adjusting.
9. Protection of installed construction.

B. Related Requirements:

1. Section CIP3 "Summary of Work" for limits on use of Project site.
2. Section CIP10 "Submittal" and 013300 "Submittal Procedures" for submitting surveys.
3. Section 017700 "Closeout Procedures" for submitting final property survey with Project Record Documents, recording of Owner-accepted deviations from indicated lines and levels, replacing defective work, and final cleaning.

1.3 DEFINITIONS

A. Cutting: Removal of in-place construction necessary to permit installation or performance of subsequent work.

B. Patching: Fitting and repair work required to restore construction to original conditions after installation of subsequent work.

1.4 INFORMATIONAL SUBMITTALS

A. Qualification Data: For land surveyor.

B. Cutting and Patching Plan: Submit plan describing procedures at least 10 days prior to the time cutting and patching will be performed. Include the following information:

1. Extent: Describe reason for and extent of each occurrence of cutting and patching.
2. Changes to In-Place Construction: Describe anticipated results. Include changes to structural elements and operating components as well as changes in building appearance and other significant visual elements.
3. Products: List products to be used for patching and firms or entities that will perform patching work.
4. Dates: Indicate when cutting and patching will be performed.
5. Utilities and Mechanical and Electrical Systems: List services and systems that cutting and patching procedures will disturb or affect. List services and systems that will be relocated and those that will be temporarily out of service. Indicate length of time permanent services and systems will be disrupted.

    a. Include description of provisions for temporary services and systems during interruption of permanent services and systems.

C. Landfill Receipts: Submit copy of receipts issued by a landfill facility, licensed to accept hazardous materials, for hazardous waste disposal.

1.5 QUALITY ASSURANCE

A. Land Surveyor Qualifications: A professional land surveyor who is legally qualified to practice in jurisdiction where Project is located and who is experienced in providing land-surveying services of the kind indicated.

B. Professional Engineer Qualifications: Refer to Section 014000 “Quality Requirements.”

C. Cutting and Patching: Comply with requirements for and limitations on cutting and patching of construction elements.

1. Structural Elements: When cutting and patching structural elements, or when encountering the need for cutting and patching of elements, whose structural function is not known, notify Engineer of locations and details of cutting and await directions from Engineer before proceeding. Shore, brace, and support structural elements during cutting and patching. Do not cut and patch structural elements in a manner that could change their load-carrying capacity or increase deflection.
2. Operational Elements: Do not cut and patch operating elements and related components in a manner that results in reducing their capacity to perform as intended or that results in increased maintenance or decreased operational life or safety.
3. Other Construction Elements: Do not cut and patch other construction elements or components in a manner that could change their load-carrying capacity, that results in reducing their capacity to perform as intended, or that results in increased maintenance or decreased operational life or safety.
4. Visual Elements: Do not cut and patch construction in a manner that results in visual evidence of cutting and patching. Do not cut and patch exposed construction in a manner that would, in Engineer's opinion, reduce the building's aesthetic qualities. Remove and replace construction that has been cut and patched in a visually unsatisfactory manner.

D. Manufacturer's Installation Instructions: Obtain and maintain on-site manufacturer's written recommendations and instructions for installation of specified products and equipment.

PART 2 - PRODUCTS

2.1 MATERIALS

A. In-Place Materials: Use materials for patching identical to in-place materials. For exposed surfaces, use materials that visually match in-place adjacent surfaces to the fullest extent possible.

1. If identical materials are unavailable or cannot be used, use materials that, when installed, will provide a match acceptable to Engineer for the visual and functional performance of in-place materials. Use materials that are not considered hazardous.

B. Cleaning Agents: Use cleaning materials and agents recommended by manufacturer or fabricator of the surface to be cleaned. Do not use cleaning agents that are potentially hazardous to health or property or that might damage finished surfaces.

PART 3 - EXECUTION

3.1 EXAMINATION

A. Existing Conditions: The existence and location of underground and other utilities and construction indicated as existing are not guaranteed. Before beginning sitework, investigate and verify the existence and location of underground utilities, mechanical and electrical systems, and other construction affecting the Work.

1. Before construction, verify the location and invert elevation at points of connection of sanitary sewer, storm sewer, gas service piping, and water-service piping; underground electrical services; and other utilities.
2. Furnish location data for work related to Project that must be performed by public utilities serving Project site.

B. Examination and Acceptance of Conditions: Before proceeding with each component of the Work, examine substrates, areas, and conditions, with Installer or Applicator present where indicated, for compliance with requirements for installation tolerances and other conditions affecting performance. Record observations.

1. Examine roughing-in for mechanical and electrical systems to verify actual locations of connections before equipment and fixture installation.
2. Examine walls, floors, and roofs for suitable conditions where products and systems are to be installed.
3. Verify compatibility with and suitability of substrates, including compatibility with existing finishes or primers.

C. Written Report: Where a written report listing conditions detrimental to performance of the Work is required by other Sections, include the following:

1. Description of the Work, including Specification Section number and paragraphs, and Drawing sheet number and detail, where applicable.

2. List of detrimental conditions, including substrates.
3. List of unacceptable installation tolerances.
4. Recommended corrections.

D. Proceed with installation only after unsatisfactory conditions have been corrected. Proceeding with the Work indicates acceptance of surfaces and conditions.

3.2 PREPARATION

A. Existing Utility Information: Furnish information to Owner and local electric utility that is necessary to adjust, move, or relocate existing utility structures, utility poles, lines, services, or other utility appurtenances located in or affected by construction. Coordinate with authorities having jurisdiction.

B. Field Measurements: Take field measurements as required to fit the Work properly. Recheck measurements before installing each product. Where portions of the Work are indicated to fit to other construction, verify dimensions of other construction by field measurements before fabrication. Coordinate fabrication schedule with construction progress to avoid delaying the Work.

C. Space Requirements: Verify space requirements and dimensions of items shown diagrammatically on Drawings.

D. Review of Contract Documents and Field Conditions: Immediately on discovery of the need for clarification of the Contract Documents, submit a request for information (RFI) to Engineer.

3.3 CONSTRUCTION LAYOUT

A. Verification: Before proceeding to lay out the Work, verify layout information shown on Drawings, in relation to the property survey and existing benchmarks and existing conditions. If discrepancies are discovered, notify Engineer promptly.

B. Engage a land surveyor experienced in laying out the Work, using the following accepted surveying practices.

1. Establish benchmarks and control points to set lines and levels at each story of construction and elsewhere as needed to locate each element of Project.
2. Establish limits on use of Project site.
3. Establish dimensions within tolerances indicated. Do not scale Drawings to obtain required dimensions.
4. Inform installers of lines and levels to which they must comply.
5. Check the location, level and plumb, of every major element as the Work progresses.
6. Notify Engineer when deviations from required lines and levels exceed allowable tolerances.
7. Close site surveys with an error of closure equal to or less than the standard established by authorities having jurisdiction.

C. Site Improvements: Locate and lay out site improvements, including pavements, grading, fill and topsoil placement, utility slopes, and rim and invert elevations.

D. Building Lines and Levels: Locate and lay out control lines and levels for structures, building foundations, column grids, and floor levels, including those required for mechanical and electrical work. Transfer survey markings and elevations for use with control lines and levels. Level foundations and piers from two or more locations.

E. Record Log: Maintain a log of layout control work. Record deviations from required lines and levels. Include beginning and ending dates and times of surveys, weather conditions, name and duty of each survey party member, and types of instruments and tapes used. Make the log available for reference by Engineer.

3.4 FIELD ENGINEERING

A. Identification: Owner will identify existing benchmarks, control points, and property corners.

B. Reference Points: Locate existing permanent benchmarks, control points, and similar reference points before beginning the Work. Preserve and protect permanent benchmarks and control points during construction operations.

1. Do not change or relocate existing benchmarks or control points without prior written approval of Engineer. Report lost or destroyed permanent benchmarks or control points promptly. Report the need to relocate permanent benchmarks or control points to Engineer before proceeding.
2. Replace lost or destroyed permanent benchmarks and control points promptly. Base replacements on the original survey control points.

C. Benchmarks: Establish and maintain a minimum of two permanent benchmarks on Project site, referenced to data established by survey control points. Comply with authorities having jurisdiction for type and size of benchmark.

1. Record benchmark locations, with horizontal and vertical data, on Project Record Documents.
2. Where the actual location or elevation of layout points cannot be marked, provide temporary reference points sufficient to locate the Work.
3. Remove temporary reference points when no longer needed. Restore marked construction to its original condition.

3.5 INSTALLATION

A. Locate the Work and components of the Work accurately, in correct alignment and elevation, as indicated.

1. Make vertical work plumb and make horizontal work level.
2. Where space is limited, install components to maximize space available for maintenance and ease of removal for replacement.
3. Conceal pipes, ducts, and wiring in finished areas unless otherwise indicated.
4. Maintain minimum headroom clearance of 96 inches in occupied spaces and 90 inches in unoccupied spaces, unless otherwise indicated on Drawings.

B. Comply with manufacturer's written instructions and recommendations for installing products in applications indicated.

C. Install products at the time and under conditions that will ensure satisfactory results as judged by Engineer. Maintain conditions required for product performance until Substantial Completion.

D. Conduct construction operations so no part of the Work is subjected to damaging operations or loading in excess of that expected during normal conditions of occupancy of type expected for Project.

E. Sequence the Work and allow adequate clearances to accommodate movement of construction items onsite and placement in permanent locations.

F. Tools and Equipment: Select tools or equipment that minimize production of excessive noise levels.

G. Templates: Obtain and distribute to the parties involved templates for Work specified to be factory prepared and field installed. Check Shop Drawings of other portions of the Work to confirm that adequate provisions are made for locating and installing products to comply with indicated requirements.

H. Attachment: Provide blocking and attachment plates and anchors and fasteners of adequate size and number to securely anchor each component in place, accurately located and aligned with other portions of the Work. Where size and type of attachments are not indicated, verify size and type required for load conditions with manufacturer.

1. Mounting Heights: Where mounting heights are not indicated, mount components at heights directed by Engineer.
2. Allow for building movement, including thermal expansion and contraction.
3. Coordinate installation of anchorages. Furnish setting drawings, templates, and directions for installing anchorages, including sleeves, concrete inserts, anchor bolts, and items with integral anchors, that are to be embedded in concrete or masonry. Deliver such items to Project site in time for installation.

I. Joints: Make joints of uniform width. Where joint locations in exposed Work are not indicated, arrange joints for the best visual effect, as judged by Engineer. Fit exposed connections together to form hairline joints.

J. Repair or remove and replace damaged, defective, or nonconforming Work.

1. Comply with Section 017700 "Closeout Procedures" for repairing or removing and replacing defective Work.

3.6 CUTTING AND PATCHING

A. General: Employ skilled workers to perform cutting and patching. Proceed with cutting and patching at the earliest feasible time, and complete without delay.

1. Cut in-place construction to provide for installation of other components or performance of other construction, and subsequently patch as required to restore surfaces to their original condition.

B. Existing Warranties: Remove, replace, patch, and repair materials and surfaces cut or damaged during installation or cutting and patching operations, by methods and with materials so as not to void existing warranties.

C. Temporary Support: Provide temporary support of Work to be cut.

D. Protection: Protect in-place construction during cutting and patching to prevent damage. Provide protection from adverse weather conditions for portions of Project that might be exposed during cutting and patching operations.

E. Adjacent Occupied Areas: Where interference with use of adjoining areas or interruption of free passage to adjoining areas is unavoidable, coordinate cutting and patching in accordance with requirements in Section CIP3 "Summary of Work."

F. Existing Utility Services and Mechanical/Electrical Systems: Where existing services/systems are required to be removed, relocated, or abandoned, bypass such services/systems before cutting to minimize interruption to occupied areas.

G. Cutting: Cut in-place construction by sawing, drilling, breaking, chipping, grinding, and similar operations, including excavation, using methods least likely to damage elements retained or adjoining construction. If possible, review proposed procedures with original Installer; comply with original Installer's written recommendations.

1. In general, use hand or small power tools designed for sawing and grinding, not hammering and chopping. Cut holes and slots neatly to minimum size required, and with minimum disturbance of adjacent surfaces. Temporarily cover openings when not in use.
2. Finished Surfaces: Cut or drill from the exposed or finished side into concealed surfaces.
3. Concrete and Masonry: Cut using a cutting machine, such as an abrasive saw or a diamond-core drill.
4. Excavating and Backfilling: Comply with requirements in applicable Sections where required by cutting and patching operations.
5. Mechanical and Electrical Services: Cut off pipe or conduit in walls or partitions to be removed. Cap, valve, or plug and seal remaining portion of pipe or conduit to prevent entrance of moisture or other foreign matter after cutting.
6. Proceed with patching after construction operations requiring cutting are complete.

H. Patching: Patch construction by filling, repairing, refinishing, closing up, and similar operations following performance of other Work. Patch with durable seams that are as invisible as practicable, as judged by Engineer. Provide materials and comply with installation requirements specified in other Sections, where applicable.

I. Cleaning: Clean areas and spaces where cutting and patching are performed. Remove paint, mortar, oils, putty, and similar materials from adjacent finished surfaces.

3.7 PROGRESS CLEANING

A. Clean Project site and work areas daily, including common areas. Enforce requirements strictly. Dispose of materials lawfully.

1. Comply with requirements in NFPA 241 for removal of combustible waste materials and debris.
2. Do not hold waste materials more than seven days during normal weather or three days if the temperature is expected to rise above 80 deg F.
3. Containerize hazardous and unsanitary waste materials separately from other waste. Mark containers appropriately and dispose of legally, according to regulations.

    a. Use containers intended for holding waste materials of type to be stored.

4. Coordinate progress cleaning for joint-use areas where Contractor and other contractors are working concurrently.

B. Site: Maintain Project site free of waste materials and debris.

C. Work Areas: Clean areas where Work is in progress to the level of cleanliness necessary for proper execution of the Work.

1. Remove liquid spills promptly.
2. Where dust would impair proper execution of the Work, broom-clean or vacuum the entire work area, as appropriate.

D. Installed Work: Keep installed work clean. Clean installed surfaces according to written instructions of manufacturer or fabricator of product installed, using only cleaning materials specifically recommended. If specific cleaning materials are not recommended, use cleaning materials that are not hazardous to health or property and that will not damage exposed surfaces.

E. Concealed Spaces: Remove debris from concealed spaces before enclosing the space.

F. Exposed Surfaces: Clean exposed surfaces and protect as necessary to ensure freedom from damage and deterioration at time of Substantial Completion.

G. Waste Disposal: Do not bury or burn waste materials on-site. Do not wash waste materials down sewers or into waterways. Comply with waste disposal requirements in Section 017419 "Construction Waste Management and Disposal."

H. During handling and installation, clean and protect construction in progress and adjoining materials already in place. Apply protective covering where required to ensure protection from damage or deterioration at Substantial Completion.

I. Clean and provide maintenance on completed construction as frequently as necessary through the remainder of the construction period. Adjust and lubricate operable components to ensure operability without damaging effects.

J. Limiting Exposures: Supervise construction operations to ensure that no part of the construction, completed or in progress, is subject to harmful, dangerous, damaging, or otherwise deleterious exposure during the construction period.

3.8 STARTING AND ADJUSTING

A. Coordinate startup and adjusting of equipment and operating components with the manufacturer to assure proper operation.

B. Start equipment and operating components to confirm proper operation. Remove malfunctioning units, replace with new units, and retest.

C. Adjust equipment for proper operation. Adjust operating components for proper operation without binding.

D. Test each piece of equipment to verify proper operation. Test and adjust controls and safeties. Replace damaged and malfunctioning controls and equipment.

E. Manufacturer's Field Service: Comply with qualification requirements in Section 014000 "Quality Requirements."

3.9 PROTECTION AND REPAIR OF INSTALLED CONSTRUCTION

A. Provide final protection and maintain conditions that ensure installed Work is without damage or deterioration at time of Substantial Completion.

B. Repair Work previously completed and subsequently damaged during construction period Repair to like-new condition.

C. Protection of Existing Items: Provide protection and ensure that existing items to remain undisturbed by construction are maintained in condition that existed at commencement of the Work.

D. Comply with manufacturer's written instructions for temperature and relative humidity.

END OF SECTION 017300

This page intentionally left blank.

©2024 CDM Smith
All Rights Reserved

SECTION 017700 - CLOSEOUT PROCEDURES

PART 1 - GENERAL

1.1 RELATED DOCUMENTS

A. Drawings and general provisions of the Contract, including General and Supplementary Conditions and other Division 01 Specification Sections, apply to this Section.

1.2 SUMMARY

A. Section includes administrative and procedural requirements for Contract closeout, including, but not limited to, the following:

1. Substantial Completion procedures.
2. Final completion procedures.
3. Warranties.
4. Final cleaning.

B. Related Requirements:

1. Section CIP 14 “Project Closeout” for City requirement. This specification supplements these requirements.
2. Section 013233 "Photographic Documentation" for submitting Final Completion construction photographic documentation.
3. Section 017823 "Operation and Maintenance Data" for additional operation and maintenance manual requirements.
4. Section 017900 "Demonstration and Training" for requirements to train the Owner's maintenance personnel to adjust, operate, and maintain products, equipment, and systems.

1.3 DEFINITIONS

A. List of Incomplete Items: Contractor-prepared list of items to be completed or corrected, prepared for the Engineer’s use prior to Engineer’s inspection, to determine if the Work is substantially complete.

1.4 ACTION SUBMITTALS

A. Product Data: For each type of cleaning agent.

B. Contractor's List of Incomplete Items: Initial submittal at Substantial Completion.

C. Certified List of Incomplete Items: Final submittal at Final Completion.

1.5 CLOSEOUT SUBMITTALS

A. Certificates of Release: From authorities having jurisdiction.

B. Certificate of Insurance: For continuing coverage.

C. Field Report: For pest-control inspection.

1.6 MAINTENANCE MATERIAL SUBMITTALS

A. Schedule of Maintenance Material Items: For maintenance material submittal items required by other Sections.

1.7 SUBSTANTIAL COMPLETION PROCEDURES

A. Contractor's List of Incomplete Items: Prepare and submit a list of items to be completed and corrected (Contractor's “punch list”), indicating the value of each item on the list and reasons why the Work is incomplete.

B. Submittals Prior to Substantial Completion: Complete the following a minimum of 10 days prior to requesting inspection for determining date of Substantial Completion. List items below that are incomplete at time of request.

1. Certificates of Release: Obtain and submit releases from authorities having jurisdiction, permitting Owner unrestricted use of the Work and access to services and utilities. Include occupancy permits, operating certificates, and similar releases.
2. Submit closeout submittals specified in other Division 01 Sections, including Project Record Documents, operation and maintenance manuals, damage or settlement surveys, property surveys, and similar final record information.
3. Submit closeout submittals specified in individual Sections, including specific warranties, workmanship bonds, maintenance service agreements, final certifications, and similar documents.
4. Submit maintenance material submittals specified in individual Sections, including tools, spare parts, extra materials, and similar items, and deliver to location designated by Engineer. Label with manufacturer's name and model number.

    a. Schedule of Maintenance Material Items: Prepare and submit schedule of maintenance material submittal items, including name and quantity of each item and name and number of related Specification Section. Obtain Engineer's signature for receipt of submittals.

5. Submit testing, adjusting, and balancing records.
6. Submit sustainable design submittals not previously submitted.
7. Submit changeover information related to Owner's occupancy, use, operation, and maintenance.

C. Procedures Prior to Substantial Completion: Complete the following a minimum of 10 days prior to requesting inspection for determining date of Substantial Completion. List items below that are incomplete at time of request.

1. Advise Owner of pending insurance changeover requirements.
2. Make final changeover of permanent locks and deliver keys to Owner. Advise Owner's personnel of changeover in security provisions.
3. Complete startup and testing of systems and equipment.
4. Perform preventive maintenance on equipment used prior to Substantial Completion.
5. Instruct Owner's personnel in operation, adjustment, and maintenance of products, equipment, and systems. Submit demonstration and training video recordings specified in Section 017900 "Demonstration and Training."
6. Advise Owner of changeover in utility services.
7. Participate with Owner in conducting inspection and walkthrough with local emergency responders.
8. Terminate and remove temporary facilities from Project site, along with mockups, construction tools, and similar elements.
9. Complete final cleaning requirements.
10. Touch up paint and otherwise repair and restore marred exposed finishes to eliminate visual defects.

D. Inspection: Submit a written request for inspection to determine Substantial Completion a minimum of 10 days prior to date the Work will be completed and ready for final inspection and tests. On receipt of request, Engineer will either proceed with inspection or notify Contractor of unfulfilled requirements. Engineer will prepare the Certificate of Substantial Completion after inspection or will notify Contractor of items, either on Contractor's list or additional items identified by Engineer, that must be completed or corrected before certificate will be issued.

1. Request reinspection when the Work identified in previous inspections as incomplete is completed or corrected.
2. Results of completed inspection will form the basis of requirements for Final Completion.

1.8 FINAL COMPLETION PROCEDURES

A. Submittals Prior to Final Completion: Before requesting final inspection for determining Final Completion, complete the following:

1. Submit a final Application for Payment in accordance with Section CIP14 “Project Closeout.”
2. Certified List of Incomplete Items: Submit certified copy of Engineer's Substantial Completion inspection list of items to be completed or corrected (punch list), endorsed and dated by Engineer. Certified copy of the list shall state that each item has been completed or otherwise resolved for acceptance.
3. Certificate of Insurance: Submit evidence of final, continuing insurance coverage complying with insurance requirements.
4. Submit Final Completion photographic documentation.

B. Inspection: Submit a written request for final inspection to determine acceptance a minimum of 10 days prior to date the Work will be completed and ready for final inspection and tests. On receipt of request, Engineer will either proceed with inspection or notify Contractor of unfulfilled requirements. Engineer will prepare a final Certificate for Payment after inspection or will notify Contractor of construction that must be completed or corrected before certificate will be issued.

1. Request reinspection when the Work identified in previous inspections as incomplete is completed or corrected.

1.9 LIST OF INCOMPLETE ITEMS

A. Organization of List: Include name and identification of each space and area affected by construction operations for incomplete items and items needing correction including, if necessary, areas disturbed by Contractor that are outside the limits of construction.

1. Organize list of spaces in sequential order, starting with exterior areas first, listed by room or space number.
2. Organize items applying to each space by major element, including categories for ceilings, individual walls, floors, equipment, and building systems.
3. Include the following information at the top of each page:

    a. Project name.
    b. Date.
    c. Name of Engineer.
    d. Name of Contractor.
    e. Page number.

4. Submit list of incomplete items in the following format:

    a. MS Excel Electronic File. Engineer will return annotated file.

1.10 SUBMITTAL OF PROJECT WARRANTIES

A. Submit warranty, bond, service and maintenance contract documentation associated with the work performed.

B. Warranty period: **Two years.**
1. This supersedes the requirements from Section CIP 16. Individual section(s) of these specifications shall have precedence over that specified herein, if the stated warranty period exceeds two years.

C. Warranty period shall commence upon the issuance of a certificate of Substantial Completion by the Owner for each Phase of the project. This supersedes the requirements from Section CIP 16. Any variation from these terms must be authorized in writing by the Owner. Only Owner's written acceptance of products and equipment shall authorize the commencement of the warranty period. It shall be the Contractor's responsibility to obtain written verification from Owner of Owner's acceptance of any and all products and/or equipment associated with the project. This request shall not be made prior to Substantial Completion.

D. Provide warranty documentation within 10 calendar days of certificate of Substantial Completion issuance, or alternate acceptance date, if approved by Owner, and prior to final request for payment.

E. Assemble two (2) original signed copies of all warranties, bonds, and service and maintenance contracts, executed by each of the respective manufacturers, suppliers and subcontractors.

F. Warranty Electronic File: Provide warranties and bonds in PDF format as well. Assemble complete warranty and bond submittal package into a single electronic PDF file with bookmarks enabling navigation to each item. Provide bookmarked table of contents at beginning of document.

1. Submit by uploading to web-based project software site.

G. Provide additional copies of each warranty to include in operation and maintenance manuals.

H. Organize warranty documents into an orderly sequence based on the table of contents of Project Manual. Provide complete information for each item, including, but not limited to, the following information:
1. Product or equipment description, as installed, and including all field changes.
2. Product or equipment manufacturer and/or supplier and contact information.
3. Contractor name and contact information.
4. Time of Submittal: Submit written warranties on request of Engineer for designated portions of the Work where warranties are indicated to commence on dates other than date of Substantial Completion, or when delay in submittal of warranties might limit Owner's rights under warranty.
5. Name of entity providing warranty, bond or service and maintenance contract and contact information.
6. Terms of warranty coverage.
7. Date of warranty commencement and duration of warranty, bond, or service and maintenance contract.
8. Proper procedure for Owner's personnel to follow during warranty, bond, or service and maintenance contract period.
9. Instances which might affect validity of warranty or bond.
10. Provide a table of contents, neatly typed, in orderly sequence of all warranty, bond, or service and maintenance contract information provided.
11. Provide submittals in bound in 3-ring binders of commercial quality with cleanable plastic covers.
12. All materials shall be 8-1/2″ x 11″ (larger sheets shall be folded to fit binders) and punched to fit the 3-ring binders.

1.11 PROJECT RECORD DOCUMENTS

A. Maintain record documents as specified under Section CIP 14 “Project Closeout” CIP14.02 Record Documents inclusive of those documents specified therein and also including:

1. Field Test Records.
2. Correspondence.

B. Make available all documents to Owner's Inspector when requested.

C. Keep record drawings current.

D. Do not permanently conceal any work until required information has been recorded.

E. Label each drawing "CONSTRUCTION AS-BUILT" in neat, large, printed letters. Legibly mark drawings to record actual construction as required under CIP 14.02, Item E and also including:

1. Manufacturer, trade name, catalog number and supplier of all products and equipment actually installed.
2. Changes made by change order or field order.

F. Indicate all changes legibly in a contrasting color.

G. Delete Architect/Engineer seal from all record drawings.

H. Submit record drawings in compliance with CIP14.02, F. and accompany submittal with a transmittal letter, containing:

1. Date.
2. Project title and number.
3. Contractor's name and address.
4. Contents of submittal.
5. Certification that record drawings as submitted are complete and accurate.
6. Signature of Contractor.

PART 2 - PRODUCTS

2.1 MATERIALS

A. Cleaning Agents: Use cleaning materials and agents recommended by manufacturer or fabricator of the surface to be cleaned. Do not use cleaning agents that are potentially hazardous to health or property or that might damage finished surfaces.

PART 3 - EXECUTION

3.1 FINAL CLEANING

A. General: Perform final cleaning as required under CIP14.04 Final Cleaning.

B. Construction Waste Disposal: Comply with waste disposal requirements in Section 017419 "Construction Waste Management and Disposal."

3.2 REPAIR OF THE WORK

A. Complete repair and restoration operations required by Section 017300 “Execution” before requesting inspection for determination of Substantial Completion.

END OF SECTION 017700

©2024 CDM Smith
All Rights Reserved

SECTION 017823 - OPERATION AND MAINTENANCE DATA

PART 1 - GENERAL

1.1 RELATED DOCUMENTS

A. Drawings and general provisions of the Contract, including General and Supplementary Conditions and other Division 01 Specification Sections, apply to this Section.

1.2 SUMMARY

A. Section includes administrative and procedural requirements for preparing operation and maintenance manuals, including the following:

1. Operation and maintenance documentation directory manuals.
2. Emergency manuals.
3. Systems and equipment operation manuals.
4. Systems and equipment maintenance manuals.
5. Product maintenance manuals.

B. Related Requirements:

1. Section 013300 "Submittal Procedures" for submitting copies of submittals for operation and maintenance manuals.
2. Section 017900 “Demonstration and Training” for training requirements.
3. Section 019113 "General Commissioning Requirements" for verification and compilation of data into operation and maintenance manuals.

1.3 DEFINITIONS

A. System: An organized collection of parts, equipment, or subsystems united by regular interaction.

B. Subsystem: A portion of a system with characteristics similar to a system.

1.4 CLOSEOUT SUBMITTALS

A. Submit operation and maintenance manuals indicated. Provide content for each manual as specified in individual Specification Sections, and as reviewed and approved at the time of Section submittals. Submit reviewed manual content formatted and organized as required by this Section.

1. Engineer will comment on whether content of operation and maintenance submittals is acceptable.
2. Where applicable, clarify and update reviewed manual content to correspond to revisions and field conditions.

B. Format: Submit operation and maintenance manuals in the following format:

1. For Draft O&M Manuals, submit by uploading to web-based project software site. Enable reviewer comments on draft submittals.
2. After approval of Final O&M Manuals, submit one paper copy and one final electronic copy.

C. Initial Manual Submittal: Submit draft copy of each manual at least 30 days before commencing demonstration and training. Engineer will comment on whether general scope and content of manual are acceptable.

D. Final Manual Submittal: Submit each manual in final form prior to requesting inspection for Substantial Completion and at least 15 days before commencing demonstration and training. Engineer will return copy with comments.

1. Correct or revise each manual to comply with Engineer's comments. Submit copies of each corrected manual within 15 days of receipt of Engineer's comments and prior to commencing demonstration and training.

E. Comply with Section 017700 "Closeout Procedures" for schedule for submitting operation and maintenance documentation.

1.5 FORMAT OF OPERATION AND MAINTENANCE MANUALS

A. Manuals, Electronic Files: Submit manuals in the form of a multiple file composite electronic PDF file for each manual type required.

1. Electronic Files: Use electronic files prepared by manufacturer where available. Where scanning of paper documents is required, configure scanned file for minimum readable file size.
2. File Names and Bookmarks: Bookmark individual documents based on file names. Name document files to correspond to system, subsystem, and equipment names used in manual directory and table of contents. Group documents for each system and subsystem into individual composite bookmarked files, then create composite manual, so that resulting bookmarks reflect the system, subsystem, and equipment names in a readily navigated file tree. Configure electronic manual to display bookmark panel on opening file.

B. Manuals, Paper Copy: Submit manuals in the form of hard-copy, bound and labeled volumes.

1. Binders: Heavy-duty, three-ring, vinyl-covered, binders, in thickness necessary to accommodate contents, sized to hold 8-1/2-by-11-inch paper; with clear plastic sleeve on spine to hold label describing contents and with pockets inside covers to hold folded oversize sheets.

a. If two or more binders are necessary to accommodate data of a system, organize data in each binder into groupings by subsystem and related components. Cross-reference other binders if necessary to provide essential information for proper operation or maintenance of equipment or system.
b. Identify each binder on front and spine, with printed title "OPERATION AND MAINTENANCE MANUAL," Project title or name, and subject matter of

contents, and indicate Specification Section number on bottom of spine. Indicate volume number for multiple-volume sets.

2. Dividers: Heavy-paper dividers with plastic-covered tabs for each section of the manual. Mark each tab to indicate contents. Include typed list of products and major components of equipment included in the section on each divider, cross-referenced to Specification Section number and title of Project Manual.
3. Protective Plastic Sleeves: Transparent plastic sleeves designed to enclose diagnostic software storage media for computerized electronic equipment. Enclose title pages and directories in clear plastic sleeves.
4. Supplementary Text: Prepared on 8-1/2-by-11-inch white bond paper.
5. Drawings: Attach reinforced, punched binder tabs on drawings and bind with text.

    a. If oversize drawings are necessary, fold drawings to same size as text pages and use as foldouts.
    b. If drawings are too large to be used as foldouts, fold and place drawings in labeled envelopes and bind envelopes in rear of manual. At appropriate locations in manual, insert typewritten pages indicating drawing titles, descriptions of contents, and drawing locations.

1.6 REQUIREMENTS FOR EMERGENCY, OPERATION, AND MAINTENANCE MANUALS

A. Organization of Manuals: Unless otherwise indicated, organize each manual into a separate section for each system and subsystem, and a separate section for each piece of equipment not part of a system. Each manual shall contain the following materials, in the order listed:

1. Title page.
2. Table of contents.
3. Manual contents.

B. Title Page: Include the following information:

1. Subject matter included in manual.
2. Name and address of Project.
3. Name and address of Owner.
4. Date of submittal.
5. Name and contact information for Contractor.
6. Name and contact information for Construction Manager.
7. Name and contact information for Engineer.
8. Name and contact information for Commissioning Authority.
9. Names and contact information for major consultants to the Engineer that designed the systems contained in the manuals.
10. Cross-reference to related systems in other operation and maintenance manuals.

C. Table of Contents: List each product included in manual, identified by product name, indexed to the content of the volume, and cross-referenced to Specification Section number in Project Manual.

1. If operation or maintenance documentation requires more than one volume to accommodate data, include comprehensive table of contents for all volumes in each volume of the set.

D. Manual Contents: Organize into sets of manageable size. Arrange contents alphabetically by system, subsystem, and equipment. If possible, assemble instructions for subsystems, equipment, and components of one system into a single binder.

E. Identification: In the documentation directory and in each operation and maintenance manual, identify each system, subsystem, and piece of equipment with same designation used in the Contract Documents. If no designation exists, assign a designation according to ASHRAE Guideline 4, "Preparation of Operating and Maintenance Documentation for Building Systems."

1.7 OPERATION AND MAINTENANCE DOCUMENTATION DIRECTORY MANUAL

A. Operation and Maintenance Documentation Directory: Prepare a separate manual that provides an organized reference to emergency, operation, and maintenance manuals. List items and their location to facilitate ready access to desired information. Include the following:

1. List of Systems and Subsystems: List systems alphabetically. Include references to operation and maintenance manuals that contain information about each system.
2. List of Equipment: List equipment for each system, organized alphabetically by system. For pieces of equipment not part of system, list alphabetically in separate list.
3. Tables of Contents: Include a table of contents for each emergency, operation, and maintenance manual.

1.8 SYSTEMS AND EQUIPMENT OPERATION MANUALS

A. Systems and Equipment Operation Manual: Assemble a complete set of data indicating operation of each system, subsystem, and piece of equipment not part of a system. Include information required for daily operation and management, operating standards, and routine and special operating procedures.

1. Engage a factory-authorized service representative to assemble and prepare information for each system, subsystem, and piece of equipment not part of a system.
2. Prepare a separate manual for each system and subsystem, in the form of an instructional manual for use by Owner's operating personnel.

B. Content: In addition to requirements in this Section, include operation data required in individual Specification Sections and the following information:

1. System, subsystem, and equipment descriptions. Use designations for systems and equipment indicated on Contract Documents.
2. Performance and design criteria if Contractor has delegated design responsibility.
3. Operating standards.
4. Operating procedures.
5. Operating logs.
6. Wiring diagrams.

7. Control diagrams.
8. Piped system diagrams.
9. Precautions against improper use.
10. License requirements including inspection and renewal dates.

C. Descriptions: Include the following:

1. Product name and model number. Use designations for products indicated on Contract Documents.
2. Manufacturer's name.
3. Equipment identification with serial number of each component.
4. Equipment function.
5. Operating characteristics.
6. Limiting conditions.
7. Performance curves.
8. Engineering data and tests.
9. Complete nomenclature and number of replacement parts.

D. Operating Procedures: Include the following, as applicable:

1. Startup procedures.
2. Equipment or system break-in procedures.
3. Routine and normal operating instructions.
4. Regulation and control procedures.
5. Instructions on stopping.
6. Normal shutdown instructions.
7. Seasonal and weekend operating instructions.
8. Required sequences for electric or electronic systems.
9. Special operating instructions and procedures.

E. Systems and Equipment Controls: Describe the sequence of operation, and diagram controls as installed.

F. Piped Systems: Diagram piping as installed, and identify color coding where required for identification.

1.9 SYSTEMS AND EQUIPMENT MAINTENANCE MANUALS

A. Systems and Equipment Maintenance Manuals: Assemble a complete set of data indicating maintenance of each system, subsystem, and piece of equipment not part of a system. Include manufacturers' maintenance documentation, preventive maintenance procedures and frequency, repair procedures, wiring and systems diagrams, lists of spare parts, and warranty information.

1. Engage a factory-authorized service representative to assemble and prepare information for each system, subsystem, and piece of equipment not part of a system.
2. Prepare a separate manual for each system and subsystem, in the form of an instructional manual for use by Owner's operating personnel.

B. Content: For each system, subsystem, and piece of equipment not part of a system, include source information, manufacturers' maintenance documentation, maintenance procedures,

maintenance and service schedules, spare parts list and source information, maintenance service contracts, and warranties and bonds as described below.

C. Source Information: List each system, subsystem, and piece of equipment included in manual, identified by product name and arranged to match manual's table of contents. For each product, list name, address, and telephone number of Installer or supplier and maintenance service agent, and cross-reference Specification Section number and title in Project Manual and drawing or schedule designation or identifier where applicable.

D. Manufacturers' Maintenance Documentation: Include the following information for each component part or piece of equipment:

1. Standard maintenance instructions and bulletins; include only sheets pertinent to product or component installed. Mark each sheet to identify each product or component incorporated into the Work. If data include more than one item in a tabular format, identify each item using appropriate references from the Contract Documents. Identify data applicable to the Work and delete references to information not applicable.

    a. Prepare supplementary text if manufacturers' standard printed data are not available and where the information is necessary for proper operation and maintenance of equipment or systems.

2. Drawings, diagrams, and instructions required for maintenance, including disassembly and component removal, replacement, and assembly.
3. Identification and nomenclature of parts and components.
4. List of items recommended to be stocked as spare parts.

E. Maintenance Procedures: Include the following information and items that detail essential maintenance procedures:

1. Test and inspection instructions.
2. Troubleshooting guide.
3. Precautions against improper maintenance.
4. Disassembly; component removal, repair, and replacement; and reassembly instructions.
5. Aligning, adjusting, and checking instructions.
6. Demonstration and training video recording, if available.

F. Maintenance and Service Schedules: Include service and lubrication requirements, list of required lubricants for equipment, and separate schedules for preventive and routine maintenance and service with standard time allotment.

1. Scheduled Maintenance and Service: Tabulate actions for daily, weekly, monthly, quarterly, semiannual, and annual frequencies.
2. Maintenance and Service Record: Include manufacturers' forms for recording maintenance.

G. Spare Parts List and Source Information: Include lists of replacement and repair parts, with parts identified and cross-referenced to manufacturers' maintenance documentation and local sources of maintenance materials and related services.

H. Maintenance Service Contracts: Include copies of maintenance agreements with name and telephone number of service agent.

I. Warranties and Bonds: Include copies of warranties and bonds and lists of circumstances and conditions that would affect validity of warranties or bonds.

1. Include procedures to follow and required notifications for warranty claims.

J. Drawings: Prepare drawings supplementing manufacturers' printed data to illustrate the relationship of component parts of equipment and systems and to illustrate control sequence and flow diagrams. Coordinate these drawings with information contained in record Drawings to ensure correct illustration of completed installation.

1. Do not use original project record documents as part of maintenance manuals.

1.10 PRODUCT MAINTENANCE MANUALS

A. Product Maintenance Manual: Assemble a complete set of maintenance data indicating care and maintenance of each product, material, and finish incorporated into the Work.

B. Content: Organize manual into a separate section for each product, material, and finish. Include source information, product information, maintenance procedures, repair materials and sources, and warranties and bonds, as described below.

C. Source Information: List each product included in manual, identified by product name and arranged to match manual's table of contents. For each product, list name, address, and telephone number of Installer or supplier and maintenance service agent, and cross-reference Specification Section number and title in Project Manual and drawing or schedule designation or identifier where applicable.

D. Product Information: Include the following, as applicable:

1. Product name and model number.
2. Manufacturer's name.
3. Color, pattern, and texture.
4. Material and chemical composition.
5. Reordering information for specially manufactured products.

E. Maintenance Procedures: Include manufacturer's written recommendations and the following:

1. Inspection procedures.
2. Types of cleaning agents to be used and methods of cleaning.
3. List of cleaning agents and methods of cleaning detrimental to product.
4. Schedule for routine cleaning and maintenance.
5. Repair instructions.

F. Repair Materials and Sources: Include lists of materials and local sources of materials and related services.

G. Warranties and Bonds: Include copies of warranties and bonds and lists of circumstances and conditions that would affect validity of warranties or bonds.

1. Include procedures to follow and required notifications for warranty claims.

PART 2 - PRODUCTS (NOT USED)

PART 3 - EXECUTION

3.1 SUBMITTAL SCHEDULE

A. Deliver operation and maintenance manuals directly to the office of the Engineer, as follows:

1. Provide preliminary copies of each manual to the office of the Engineer, no later than 30 days following approval of the respective shop drawings.
2. Provide final copies of each completed manual prior to testing.
3. Provide a letter that grants the Engineer and Owner to the limited right to use and reproduce each manual (in it its entirety or any portion thereof) from the respective equipment manufacturer(s). Such limited right shall allow the Engineer and Owner to use
3. each manual or and portion thereof for:

a. The potential assembly of a comprehensive facility operation and maintenance manual for the sole benefit of the Owner.
b. Supplemental training of the Owner's personnel and operators, over and above the required vendor's training, regarding operation of the facility as a system.

4. For each submitted manual, complete and submit the O&M Manual Review Checklist, appended to this Section.

B. The Engineer will review Operation and Maintenance manuals submittals for operating equipment for conformance with the requirements of the applicable specification Section. The review will generally be based on the O&M Manual Review Checklist appended to this Section.

C. If during test and start-up of equipment, any changes were made to the equipment, provide two hard copies of as-built drawings or any other amendments for insertion, by the contractor, in the previously transmitted final manuals. In addition, provide one revised electronic version including the as-built drawings and any other amendments. The manuals shall be completed, including updates, if any, within 30 days of start-up and testing of the facility.

D. As applicable, complete and submit the Equipment Manufacturer’s Certificate of Installation Testing and Instruction, appended to this Section, within 30 days after final inspection and plant start-up testing.

3.2 VENDOR TRAINING/INSTRUCTIONS (TO OWNER's PERSONNEL)
A. Refer to Section 017900 “Demonstration and Training” for requirements.

3.3 ATTACHMENTS

A. Equipment Manufacturer's Certificate of Installation Testing and Instruction form.

END OF SECTION 017823

This page intentionally left blank.

©2024 CDM Smith
All Rights Reserved

EQUIPMENT MANUFACTURER'S CERTIFICATE
OF INSTALLATION TESTING AND INSTRUCTION

Owner: _____

Project: _____

Contract No.: _____

CDM No.: _____

EQUIPMENT SPECIFICATION SECTION _____

EQUIPMENT DESCRIPTION _____

I, _____, Authorized representative of
(PRINT NAME)

_____
(PRINT MANUFACTURER'S NAME)

hereby CERTIFY that _____
(PRINT EQUIPMENT NAME AND MODEL WITH SERIAL NO.)

installed for the subject project [has] [have] been installed in a satisfactory manner, [has] [have] been satisfactorily tested, [is] [are] ready for operation, and that Owner assigned operating personnel have been suitably instructed in the operation, lubrication, and care of the unit[s] on Date: _____ Time: _____.

CERTIFIED BY: _____ DATE: _____
(SIGNATURE OF MANUFACTURER'S REPRESENTATIVE)

OWNER'S ACKNOWLEDGMENT OF MANUFACTURER'S INSTRUCTION

[I] [We] the undersigned, authorized representatives of the _____ and/or Plant Operating Personnel have received classroom and hands on instruction on the operation, lubrication, and maintenance of the subject equipment and [am] [are] prepared to assume normal operational responsibility for the equipment:

_____ DATE: _____

_____ DATE: _____

_____ DATE: _____

O&M Manual Review Checklist

Submittal No.: _____

Project No.: _____

Manufacturer: _____

Equipment Submitted: _____

Specification Section: _____

Date of Submittal:

	General Data	
1.	Are the area representative's name, address, e-mail address and telephone number included?	
2.	Is the nameplate data for each component included?	
3.	Are all associated components related to the specific equipment included?	
4.	Is non-pertinent data crossed out or deleted?	
5.	Are drawings neatly folded and/or inserted into packets?	
6.	Are all pages properly aligned and scanned legibly?	
7.	Is the .PDF document bookmarked according to the table of contents?	
Operations and Maintenance Data		
8.	Is an overview description of the equipment and/or process included?	
9.	Does the description include the practical theory of operation?	
10.	Does each equipment component include specific details (design characteristics, operating parameters, control descriptions, and selector switch positions and functions)?	
11.	Are alarm and shutdown conditions specific to the equipment provided on this project clearly identified? Does it describe possible causes and recommended remedies?	
12.	Are step procedures for starting, stopping, and troubleshooting specific to the equipment provided included?	
13.	Is a list of operational parameters to monitor and record specific to the equipment provided included?	
14.	Is a proposed operating log sheet specific to the equipment provided included?	
15.	Is a spare parts inventory list included for each component?	
16.	Is a lubrication schedule for each component specific to the equipment provided included - or does it clearly state “No Lubrication Required"?	
17.	Is a maintenance schedule for each component specific to the equipment provided included?	
18..	Is a copy of the warranty information included?	

©2024 CDM Smith
All Rights Reserved

SECTION 025731 - KARST VOID MITIGATION

PART 1 - GENERAL

1.1 RELATED DOCUMENTS

A. Drawings and general provisions of the Contract, including General and Supplementary Conditions and Division 01 Specification Sections, apply to this Section.

1.2 SUMMARY

A. Section includes:

1. Notification requirements.
2. Mitigation measures for significant voids and water flow features discovered in bedrock during excavation activities.

B. Related Requirements:
1. Pipe excavation, trenching, embedment, encasement, and backfilling are included in Section G4.
2. Granular fill materials are included in Section G5.
3. Sedimentation and erosion control are included in Section G6.
4. Submittals are in included in Section 013300 “Submittal Procedures”.
5. Trench Safety Requirements are included in Section CIP11.
6. Concrete for structures is included in Section C2.
7. Section 312323.33 “Flowable backfill”.

1.3 DEFINITIONS

A. Void Type Grade 1: Opening in rock measuring more than 1 cubic foot (e.g., 1 foot by 1 foot by 1 foot), but less than 18 cubic feet (e.g., 2 feet by 3 feet by 3 feet).

B. Void Type Grade 2: Opening in rock measuring 18 cubic feet or more but less than 160 cubic feet (e.g., 4 feet by 4 feet by 10 feet or 2 feet by 2 feet by 20 feet).

C. Void Type Grade 3: Opening in rock measuring 160 cubic feet or more. A specifically designed mitigation measure will typically be required for this size void.

D. Local Regulatory Authority: The Texas Commission on Environmental Quality.

E. Geologist: A licensed Professional Geologist, registered in the State of Texas, hired by either the Engineer or Contractor.

F. Qualified Geophysical Testing Firm: A firm with a Professional Geologist licensed in the State of Texas with a minimum of 5 years of experience performing geophysical testing, including ground penetrating radar (GPR) and other applicable test methods to identify potential

subsurface voids. This firm will be hired by the Contractor and is to provide independent site evaluation.

1.4 UNIT PRICES

A. Void Mitigation:

1. Description: Includes replacement with approved materials, including all labor, materials, equipment, and all appurtenances.
2. Unit of Measurement: By cubic yard.

B. Excavation:

1. Description: Includes authorized additional excavation.
2. Unit of Measurement: By cubic yard.

C. Hard Rock:

1. Description: Includes hard rock.
2. Unit of Measurement: By cubic yard.

D. Concrete:

1. Description: Includes concrete for plugging.
2. Unit of Measurement: By cubic yard.

E. Grout:

1. Description: Includes grout for plugging.
2. Unit of Measurement: By cubic yard.

F. Geotextile Fabric:

1. Description: Includes geotextile fabric.
2. Unit of Measurement: By square yard.

G. Permanent Turf Reinforcement Mat (PTRM):

1. Description: Includes permanent turf reinforcement mat.
2. Unit of Measurement: By square yard.

H. Rock-Filled Polypropylene Bags:

1. Description: Includes bags and sand/rock fill.
2. Unit of Measurement: By cubic yard.

1.5 INSTALLATION CONFERENCE

A. In-field Conference: Conduct in-field conference at void location with Owner's Representative, Engineer and Engineer's Geologist, prior to proceeding with mitigation.

1.6 ACTION SUBMITTALS

A. Material Data and Certification: For each type of material to be used. Submit prior to start of construction to avoid delay in the event a void is encountered.

1. Flowable backfill.
2. Concrete.
3. Hard Rock.
4. Filter fabric.
5. Permanent turf reinforcement mat.
6. Polypropylene bags filled with pea gravel.
7. Other materials as specified herein and shown on the Drawings.

B. Shop Drawings: Provided by the qualified licensed consulting Geologist registered in the State of Texas.

1. Include plans, sections, and requirements for furnishing and installing mitigation measures significant voids and water flow features discovered in bedrock during excavation activities of a project.
2. Provide field sketches and photographs documenting any void mitigation measures installed during construction.
3. Pipe wall crushing and deflection calculations, as appropriate for flowable fill backfill associated with Class III Void Mitigation Measures.

1.7 CLOSEOUT SUBMITTALS

A. Project Closeout: For project closeout submittal, refer to Section CIP 14 Project Closeout.

1.8 QUALITY ASSURANCE

A. Testing Agency Qualifications: Qualified according to ASTM C1021 for testing indicated.

B. Testing Agency Qualifications: Member company of ANSI/NETA or Nationally Recognized Testing Laboratory (NRTL).

1.9 SITE CONDITIONS

A. Visit site of work and examine premises to verify existing conditions relative to work.

B. Notify Engineer and Owner in writing within 24 hours of a discovered void that meets any of the following criteria:

1. Is at least one square foot in total area.
2. Blows air from within substrate.
3. Consistently receives water during any rain event.
4. Potentially transmits groundwater.

C. Discontinue construction within 50 feet of void extents until mitigation measures are reviewed and approved by Owner and Engineer.

1. Construction may only proceed after mitigation measures are reviewed and approved by the Engineer, Owner and Local Regulatory Authority, if applicable.

PART 2 - PRODUCTS

2.1 MATERIALS

A. Hard Rock:

1. Hardness: Greater than 7 on the Mohs hardness scale.
2. Size: 3 inches in smallest dimension and 5 inches in largest dimension.
3. Open-graded with details and fines removed.
4. Durable, sound material not susceptible to degradation due to presence of water.

B. Controlled Low Strength Material (Flowable Fill):

1. Meet requirements for flowable fill included in Section C9.

C. Low Slump Concrete:

1. Meet requirements for curb and gutter, hand-vibrated concrete as specified in Section C1.
   a. Maximum 3-inch slump.
   b. 3,500 psi concrete mixtures allowed or required by the Local Regulatory Authority that meet the same specification will be accepted as an alternate on a case-by-case basis.

D. Pea Gravel:

1. Meet requirements of pea gravel backfill included in Section G5.

E. Pipe:

1. All pipe used for Air and Moisture continuity shall comply with ASTM D1785 schedule 40 PVC.

2.2 GEOTEXTILES

A. Filter Fabric:

1. Meet requirements for silt fence fabric filter fabric included in Section G6.

B. Polypropylene Bags for Pea Gravel:

1. Description:
   a. Non-biodegradable, UV-resistant, woven geotextile fabric.
   b. Material: Polyester Polypropylene or Polyethylene.
   c. Edges: Selvaged or finished to prevent separation of outer material.
   d. Calendar such that yarns will retain relative positions.
   e. Tied to be fully enclosed to prevent loss of internal material.

2. Performance Criteria:
   a. Minimum Bag Size: 14 inches wide by 24 inches long and 6 inches thick when filled.
   b. Nominal Weight Capacity: 50 lb.
   c. Minimum Fabric Denier: 1250.
   d. Minimum UV Rating: 4,000 hours.

C. Permanent Turf Reinforcement Mat (PTRM):

1. Non-Degradable Turf Reinforcement Mat: Meet specification requirements of United States Department of Transportation, Federal Highway Administration (FHWA) FP-03, Section 713.18.
2. Material: Nylon or other inert plastic not coated with chemical, substance or film.
3. Mesh Opening: Maximum 0.1 inch.

2.3 ACCESSORIES

A. Use products to tie and secure geotextile fabrics as recommended by geotextile manufacturer to prevent loss of internal material or movement of geotextile during performance of the Work.

PART 3 - EXECUTION

3.1 EXAMINATION

A. At least 72 hours before completing each of the structure excavations listed in G9 “Structural excavation” to the prescribed elevations, depths and extents shown on the Drawings or specified for the Work, notify Contractor’s independent geophysical testing firm to perform geophysical evaluation of the completed excavation. Submit geophysical results and interpretation of potential voids to Engineer as required prior to beginning backfilling.

B. Upon notification of a void meeting conditions for mitigation, Owner will direct Engineer to establish appropriate permanent void and water flow mitigation measures. Engineer will arrange for an inspection of the void by a qualified licensed consulting Geologist registered in the State of Texas and hired by the Engineer.

C. If Engineer, Engineer’s consulting Geologist or designated representative observes unusually large voids or unforeseen circumstances, other measures may be prescribed than those in this Section.

3.2 MITIGATION MEASURES

A. Class I Void Mitigation Measures: Temporary measures for a void at bottom of an excavation/trench or along a side wall of an excavation/trench.

1. Cover void opening with filter fabric.
   a. Minimum 3-foot distance from edge of void to edge of filter fabric.

2. Then cover void opening with plywood planking.

a. Minimum 1-foot distance from edge of void to edge of planking. Planking is to be placed to prevent backfill from entering void.

3. Finally, place rock or concrete block over planking to keep planking secured.
   a. Minimum weight of 5 pounds.

B. Class II Void Mitigation Measures: Permanent measures for a void at bottom of an excavation/trench.

1. For void openings greater than 30-inches deep, Engineer will provide direction to either hand pack 3 to 5-inch hard rock to provide stable bearing support and cover rock at opening with filter fabric or backfill entire void with low slump concrete (3,500 psi).
2. If 3 to 5-inch hard rock used, place low slump concrete (3,500 psi) to cover opening area and seal void at limits of excavation.
   a. Concrete: Minimum 18 inches thick within void opening extending minimum of 6 inches beyond edge of void.
   b. Seal void openings less than 30 inches deep entirely with concrete. Use form to ensure proper placement of a low slump concrete-seal.
   c. After void is covered, place flowable fill as bedding and backfill extending a minimum of 5 feet beyond edge of all voids in all directions.

3. For Class II voids, additional measures may be specified by Engineer, Engineer's consulting Geologist or Local Regulatory Agency representative (e.g., increase thickness of concrete and placement of rebar reinforcement in concrete, placement of a steel plate over void opening, etc.).

C. Class III Void Mitigation Measures: Permanent measures in wall of an excavation/trench.

1. Hand pack 3 to 5-inch hard rock to provide stable bearing support and cover rock at opening with filter fabric.
2. Hand pack void area with pea gravel-filled sealed polypropylene bags to provide stable bearing support to protect a void from infiltration of backfill material.
3. If a void is greater than 100 cubic feet or is located within a rock stratum that is structurally unstable, as determined by the Engineer or Engineer's consulting Geologist, use 3 to 5-inch hard rock behind gravel-filled polypropylene bags to prevent ground collapse.
4. As required by Engineer, Engineer's consulting Geologist or Local Regulatory Authority representative, connector pipes may be required to maintain air or water flow within a void bisected by excavation/trench.
5. After a void is filled, place low slump concrete (3,500 psi) to seal void opening. If needed, place a form to ensure a minimum thickness of concrete extends at least 18 inches into void.
6. In trenches, provide secondary containment of wastewater and storm sewer lines by outer carrier pipe or low slump concrete (3,500 psi) or flowable fill encasement.
   a. Design of carrier pipe must be reviewed by Engineer for all wastewater and storm sewer lines prior to approval of the mitigation plan by the Local Regulatory Authority. Provide stabilizing collars and other supports.
   b. Low Slump Concrete or Flowable Fill Encasement: Minimum 6-inch thickness on all sides of pipe extending minimum of 5 feet beyond edge of any voids.
   c. If flowable fill encasement is proposed, submit pipe deflection and wall crushing calculations.

D. Class IV Void Mitigation Measures: Will not be used for this project.

E. Class V Void Mitigation Measures: Permanent measures for a void which extends through excavation/trench and contains actively flowing water.

1. Place Low Slump Concrete or Flowable Fill material into excavation or along pipe length as directed by Engineer or designated representative.
2. Place pea-gravel backfill material wrapped in PTRM one foot beyond limits of void in all directions. Place PTRM along areas between gravel material and trench walls/earth backfill overlapping at top.
3. Place minimum 3 feet of Low Slump Concrete or Flowable Fill into excavation or along pipe length on either side of gravel backfill material extending minimum of 1 foot above gravel backfill material. Use forms to control placement of concrete or flowable backfill material.

F. For very large voids, Engineer's Geologist will conduct a cave stability analysis and define specific mitigation measures. Implement specific mitigation measures per direction of Engineer or designated representative after the mitigation plan is approved by the Local Regulatory Authority.

3.3 FIELD QUALITY CONTROL

A. Special Inspections: Engineer will engage a qualified licensed Geologist to perform the following inspections.

1. Geologic and biologic inspection for temporary void protection.
2. Second void or water flow feature inspection.
3. Once daily inspections during excavation operations and prior to backfilling excavation/trench.

B. Testing Agency: Owner will engage a qualified testing agency to perform tests and inspections.

END OF SECTION 025731

This page intentionally left blank.

© 2024 CDM Smith
All Rights Reserved

SECTION 036000 - GROUTING

PART 1 - GENERAL

1.1 RELATED DOCUMENTS

A. Drawings and general provisions of the Contract, including General and Supplementary Conditions and Division 01 Specification Sections, apply to this Section.

1.2 SUMMARY

A. Section Includes:

1. Concrete grout.
2. Nonshrink epoxy grout.
3. Nonshrink cementitious grout.

B. Related Requirements:
1. Section C2 “Concrete for Structures.”
2. Section C7 “Reinforcing Steel.”

1.3 ACTION SUBMITTALS

A. Product Data: Submit manufacturer information regarding grout and surface preparation, mixing and installation.

1. Commercially manufactured nonshrink cementitious grout. Include catalog cuts, technical data, storage requirements, product life, working time after mixing, temperature considerations, and conformity to the specified ASTM standards.
2. Commercially manufactured nonshrink epoxy grout. Include catalog cuts, technical data, storage requirements, product life, working time after mixing, temperature considerations, and conformity to the specified ASTM standards.
3. Concrete grout. Include data as required for concrete and for fiber reinforcement as delineated in Section C2 “Concrete for Structures.”

1.4 INFORMATIONAL SUBMITTALS

A. Manufacturer's Certificate: Certify that products meet or exceed specified requirements.

B. Manufacturer Instructions: Submit instructions for mixing, handling, surface preparation, and placing epoxy-type and nonshrink grouts.

C. Field Quality-Control Submittals: Indicate results of Contractor-furnished tests and inspections.

D. Qualifications Statement:

1. Submit qualifications for manufacturer.

1.5 QUALITY ASSURANCE

A. Manufacturer: Company specializing in manufacturing products specified in this Section with minimum ten years' experience in production and use of provided grouts.

B. Independent testing laboratory shall meet the requirements of ASTM E329 and ASTM C1077 and be acceptable to the Engineer. Laboratories affiliated with the Contractor or in which the Contractor or officers of the Contractor's organization have beneficial interest are not acceptable.

C. Pre-installation Meeting: At least ten working days before grouting, hold a pre-installation meeting to review the requirements for surface preparation, mixing, placing and curing procedures for each product proposed for use. Notify all parties involved with grouting, including the Engineer, of the meeting at least ten working days prior to its scheduled date.

D. Services of Manufacturer's Representative: Provide services of a field technician of the nonshrink grout manufacturer and epoxy grout manufacturer who has performed at least five projects of similar size and complexity during the last five years, to attend the pre-installation meeting, to be present for the initial installation of each type of nonshrink grout, and to correct installation problems.

E. Field Testing:

1. All field testing and inspection services will be provided by Owner. Assist in the sampling of materials, and cooperate by allowing free access to the work and permitting the use of ladders, scaffolding, and such incidental equipment as may be required. Methods of testing will comply with the applicable ASTM Standards.

F. Field testing of concrete grout will be as specified for concrete in Section C2 “Concreter for Structures.”

1.6 DELIVERY, STORAGE, AND HANDLING

A. Inspection: Accept materials on Site in manufacturer's original packaging and inspect for damage.

B. Store materials according to manufacturer instructions. Limit total storage time from date of manufacture to date of installation to six months or the manufacturer’s recommended storage time, whichever is less.

C. Remove immediately from the site material which becomes damp, contains lumps, or is hardened and replace with acceptable material.

D. Protection:

1. Protect materials from moisture and dust by storing in clean, dry location.
2. Provide additional protection according to manufacturer instructions.

1.7 AMBIENT CONDITIONS

A. Maximum Conditions: Do not perform grouting if temperatures exceed 90 degrees F.

B. Minimum Conditions: Do not perform grouting if the minimum temperature of base plates, supporting concrete and grout are less than 40 degrees F. Maintain minimum temperature of 40 degrees F before, during, and after grouting, until grout has set.

PART 2 - PRODUCTS

2.1 NONSHRINK EPOXY GROUT

A. Description:

1. Pre-proportioned, prepackaged, three-component, nonshrink epoxy grout, 100 percent solids system consisting of epoxy resin, hardener, and blended aggregate.

B. Performance and Design Criteria:

1. Minimum Compressive Strength:

a. 10,000 psi at seven days.
b. Comply with ASTM C579.

2. Coefficient of Expansion:

a. 30x10-6 inch per degree F.
b. Comply with ASTM C531.

3. Minimum Tensile Strength:

a. 1,800 psi.
b. Comply with ASTM C307.

C. Product: Provide one of the following or equal:

1. Masterflow 648 CP; by BASF Building Systems.
2. Five Star HP Epoxy Grout; by Five Stars Products, Inc.
3. Sikadur 42 Grout-Pak; by Sika Corp.
4. E3-G Epoxy Grout; by Euclid Chemical Co.

2.2 NONSHRINK CEMENTITIOUS GROUT

A. Description:

1. Pre-mixed and ready-for-use formulation requiring only addition of water.
2. Nonshrink, non-corrosive, nonmetallic, non-gas forming, not containing expansive cement and no chlorides.
3. No shrinkage when tested in conformity with ASTM C827.

B. Performance and Design Criteria:

1. Certified to maintain initial placement volume or expand after set, and to meet following minimum properties when tested according to ASTM C1107/C1107M for Grades B, C, D and CRD-C621 nonshrink grout:

a. Setting Time:

1) Initial: Approximately two hours.
2) Final: Approximately three hours.
3) Comply with ASTM C191.

b. Maximum Expansion: 0.10 to 0.40 percent.
c. Minimum Compressive Strength:

1) One-Day: 4,000 psi.
2) Seven-Day: 7,000 psi.
3) 28-Day: 10,000 to 10,800 psi.
4) Comply with CRD-C621.

C. Product: Provide one of the following or equal:

1. Sika Grout 212 by Sika Corp.
2. NS Grout by The Euclid Chemical Co.
3. Five Star Grout by Five Star Products, Inc.

2.3 CONCRETE GROUT

A. Description: Conform to the requirements of Section C2 “Concrete for Structures”, except as follows. Proportion with Type II cement, coarse and fine aggregates, water, water reducing admixture, and air entraining agent to produce specified mix performance:

1. Average Strength (ASTM C579): 3500 psi at 28 days nominal strength.
2. Maximum Coarse Aggregate Size: 3/8-inch.
3. Minimum Cement Content: 540 lbs. per cubic yard.
4. Maximum Water to Cement Ratio: 0.45.
5. Maximum Slump: 5 inches.

B. Add synthetic reinforcing fibers to the concrete grout mix at the rate of 1.5 lbs. of fibers per cubic yard of grout. Add fibers from manufacturer's pre-measured bags and according to manufacturer's recommendations to ensure complete dispersion of fiber bundles as single monofilaments within the concrete grout.

PART 3 - EXECUTION

3.1 EXAMINATION

A. Verify areas to receive grout.

3.2 PREPARATION

A. Place grout where indicated or specified over cured concrete which has attained its specified design strength unless otherwise approved by Engineer.

B. Remove defective concrete, ice, laitance, dirt, oil, grease, form release agents, paints, and other foreign material from concrete surfaces, which may affect the bond or performance of the grout by brushing, hammering, chipping, sand blasting or other similar dry mechanical means until sound and clean concrete surface is achieved. Irregular voids or projecting coarse aggregate need not be removed if they are sound, free of laitance and firmly embedded into the parent concrete.

   1. Air compressors used to clean surfaces in contact with grout shall be the oil-less type or equipped with an oil trap in the airline to prevent oil from being blown onto the surface.

C. Roughen concrete lightly, but not to interfere with placement of grout.

D. Remove foreign materials from metal surfaces in contact with grout.

E. Align, level, and maintain final positioning of components to be grouted.

F. Wash concrete surfaces clean and then keep moist for at least 24 hours prior to the placement of nonshrink cementitious or cement grout. Saturation may be achieved by covering the concrete with saturated burlap bags, use of a soaker hose, or flooding the surface or other method acceptable to Engineer. Upon completion of the 24 hour period, remove visible water from the surface prior to grouting.

G. Nonshrink epoxy grouts do not require saturation of concrete substrate. Do not wet concrete surfaces to receive nonshrink epoxy grout. Completely dry surfaces in contact with epoxy grout before grouting.

H. Support equipment during alignment and installation of grout by shims, wedges, blocks, or other approved means. Prevent bond of shims, wedges and blocking devices by bond breaking coatings and remove after grouting unless otherwise approved by Engineer. Grout voids created by the removal of shims, wedges, and blocks.

3.3 INSTALLATION - GENERAL

A. Formwork:

   1. Construct leakproof forms anchored and shored to withstand grout pressures.
   2. Install formwork with clearances to permit proper placement of grout.

B. Placing of Grout:

   1. Place grout material quickly and continuously.
   2. Do not use pneumatic-pressure or dry-packing methods.
   3. Apply grout from one side only to avoid entrapping air.
   4. Do not vibrate placed grout mixture or permit placement if area is being vibrated by nearby equipment.

5. Thoroughly compact final installation and eliminate air pockets.
6. Do not remove leveling shims for at least 48 hours after grout has been placed.

C. Curing:

1. Prevent rapid loss of water from grout during first 48 hours by use of approved membrane curing compound or by using wet burlap bags, soaker hoses or ponding.
2. Immediately after placement, protect grout from premature drying, excessively hot or cold temperatures, and mechanical injury.
3. After grout has attained its initial set, keep damp for minimum three days.

D. Reflect existing underlying expansion joints, partial contraction joints, and construction joints through the grout.

3.4 INSTALLATION - CONCRETE GROUT

A. Inspect slabs scheduled to receive concrete grout. ICRI CSP 6 (medium scarification). Protect and keep the surface clean until placement of concrete grout.

B. Remove debris and clean the surface by sweeping and vacuuming of all dirt and other foreign materials. Pressure wash the surface. Do not flush debris into tank drain lines.

C. Saturate the concrete surface for at least 24 hours prior to placement of the concrete grout by use of saturated burlap bags, soaker hoses or ponding. Remove excess water just prior to placement of the concrete grout. Place a cement slurry immediately ahead of the concrete grout so that the slurry is moist when the grout is placed. Work the slurry over the surface with a broom until it is coated with approximately 1/16 to 1/8-inch thick cement paste.

D. Place concrete grout to final grade using the scrapers of the installed mechanical equipment as a guide for surface elevation and to eliminate high and low spots. Unless specifically approved by the equipment manufacturer, do not use mechanical scraper mechanisms powered by their motors as a finishing machine or screed to push grout.

E. Steel trowel finish and cure the concrete grout as required.

3.5 INSTALLATION - NONSHRINK EPOXY GROUTS

A. Mix in accordance with manufacturer's recommendations. Mix full batches only, to maintain proper proportions of resin, hardener, and aggregate. Do not vary the ratio of components or add solvent to change the consistency of the grout mix. Do not overmix. Do not entrain air bubbles by mixing too quickly.

B. Monitor ambient weather conditions and contact the grout manufacturer for special placement procedures to be used for temperatures below 60 degrees F or above 90 degrees F.

C. Place grout rapidly and continuously to avoid cold joints. Place grout in lifts in accordance with manufacturer's recommendations.

D. Provide forms as specified in Paragraph 3.3A. Place grout into the designated areas and prevent entrapment of air. Fill all spaces and provide full contact between grout and adjoining surfaces. Provide grout holes and vent holes as necessary.

E. Minimize 'shoulder' length (extension of grout horizontally beyond base plate). In no case shall the shoulder length of the grout be greater than the grout thickness.

F. Finish grout by puddling to cover all aggregate and provide a smooth finish. Break bubbles and smooth top surface of grout in conformity with manufacturer's recommendations.

G. Epoxy grouts are self-curing and do not require the application of water. Maintain formed grout within its recommended placement temperature range for at least 24 hours after placement, until grout compressive strength reaches 1,000 psi or as recommended by manufacturer, whichever is longer.

H. Provide grout control joints as indicated on Drawings.

3.6 SCHEDULE

A. Use particular types of grout as follows:

1. General Purpose Nonshrink Cementitious Grout (CRD-C621 Grade D): Use at locations where nonshrink grout is indicated, except for base plates greater in area than 3-feet wide by 3-feet long.
2. Nonshrink Epoxy Grout: Use at locations specifically indicated to receive nonshrink epoxy grout.
3. Concrete Grout:

    a. Use for concrete grout fill within liquid retaining structures and other locations where specifically indicated.

END OF SECTION 036000

© 2024 CDM Smith
All Rights Reserved

This page intentionally left blank.

©2024 CDM Smith
All Rights Reserved

SECTION 099676.13 – WASTEWATER COLLECTION SYSTEM COATINGS

PART 1 - GENERAL

1.1 RELATED DOCUMENTS

A. Drawings and general provisions of the Contract, including General and Supplementary Conditions and Division 01 Specification Sections, apply to this Section.

1.2 SUMMARY

A. Section includes surface preparation and application of high-performance coating systems on concrete vertical and horizontal surfaces required to supply and install corrosion resistant coating on all concrete surfaces within all sewer manholes. Corrosion resistant coating shall be capable of withstanding a pH range of < 2.0 and up to 12.0 when in service. Corrosion resistant coating shall be applied to the interior concrete wall surfaces and underside of top slab of all wastewater structures.

B. Related Requirements:

1. Division 03 “Concrete” sections for concrete construction.

1.3 DEFINITIONS

A. MPI Gloss Levels: Following define gloss levels according to ASTM D 523:

1. MPI Gloss Level 1 - Traditional Matte or Flat Finish: Maximum five units at 60 degrees and 10 units at 85 degrees.
2. MPI Gloss Level 2 - Velvet-Like Finish: Maximum 10 units at 60 degrees and 10 to 35 units at 85 degrees.
3. MPI Gloss Level 3 - Traditional Eggshell-Like Finish: 10 to 25 units at 60 degrees and 10 to 35 units at 85 degrees.
4. MPI Gloss Level 4 - Satin-Like Finish: 20 to 35 units at 60 degrees and minimum 35 units at 85 degrees.
5. MPI Gloss Level 5 - Traditional Semi-Gloss Finish: 35 to 70 units at 60 degrees.
6. MPI Gloss Level 6 - Traditional Gloss: 70 to 85 units at 60 degrees.
7. MPI Gloss Level 7 - High Gloss: Minimum 85 units at 60 degrees.

B. Mild Exposure: Normal outdoor weathering and standard industrial exposures are considered mild environments. A normal industrial setting is one with low to moderate levels of humidity and condensation and little development of mold and mildew. A mild environment has only limited exposure to chemical fumes or mist, and occasional occurrences of chemical spills or splash. Regular cleaning with standard commercial chemical cleaning agents, with only occasional use of stronger chemical cleaning agents, is also characteristics of a mild environment. Metal corrosion will occur in a mild environment, but it is minimal. These are generally dry areas with little to no Hydrogen Sulfide (H2S), Chlorine, or other corrosive chemicals, or the area is damp.

C. Moderate Exposure: An atmosphere that can be characterized as corrosive, within reasonable limits, is considered a moderate environment. In an industrial setting, a moderate environment indicates intermittent exposure to high humidity and condensation with occasional development of mold and mildew. Exposure to heavy concentrations of chemical fumes or mist and accidental chemical spills or splash occurs occasionally in a moderate environment. Regular use of strong chemicals rather than standard commercial cleaning agent also changes a mild environment into a moderate one. Metal corrosion is common in a moderate environment.

D. Severe Exposure: An aggressively corrosive industrial or predominantly chemical environment with regular exposure to strong chemical fumes, mists, and dust is considered a severe environment. In an industrial setting, a severe environment is one with sustained exposure to high humidity and condensation that results in heavy development of mold and mildew. Frequent spilling and splashing of strong chemicals (acids, alkalis, oxidizers, and solvents) are also characteristic of a severe environment. Metal corrosion can be expected in a severe environment. Immersion conditions, marine environment with sustained exposure to saltwater spray, and arctic environment with long periods of extremely low temperature are considered severe environments. These are areas where if no high-performance coatings are applied on steel or concrete, very early failure and structural damage will be evident.

1.4 ACTION SUBMITTALS

A. Product Data: For each type of product. Include preparation requirements and application instructions.

1. Indicate VOC content.

B. Product List: Use same designations indicated on Drawings and in Collection System Coating Schedule. Include color designations and product runs (batch numbers).

C. High-performance Coating System Manufacturer's written instructions and drawing details for treatment of coating materials at terminations in the structures to be coated including: pipe penetrations, metal embedments, gate frames, and other terminations to be determined from the Contract Drawings. This information shall also include detail treatment for the corrosion resistant coating system at all joints in the concrete.

1.5 INFORMATIONAL SUBMITTALS

A. Qualification Data: For Installer and manufacturer.

B. Prequalification Data: Coating system installation contractor (Applicator) must be prequalified and meet the criteria stated in Paragraph 1.6-A to be considered an approved specialty concrete repair and rehabilitation (SCRR) contractor. A complete prequalification package shall be submitted to the Engineer for consideration 14 days prior to the date set for the receipt of bids. The prequalification submittal shall include the following items:

1. The Applicator firm shall provide a company profile detailing its experience with specialty concrete repair and rehabilitation.
2. The firm shall provide a copy of their current General Contractor's license.
3. The firm shall provide a complete record of experience showing ten previous and concurrent years of providing maintenance services on structures of similar sizes and

types. The record shall include the size/type of structure, name, address and telephone number of the Owner and the year of construction.

4. The firm shall be able to provide copies of certificates from the manufacturer of any repair product once determined, within 5 business days upon request.
5. The firm shall provide documentation verifying compliance with the SPCC, NACE, and safety qualifications listed in Paragraph 1.6-A.

C. Product Certificates: Notarized certificate for coating system stating that product meets requirements of this Section.

1.6 QUALITY ASSURANCE

A. Minimum qualifications shall be as follows:
   1. Company
      a. All surface preparation work shall be performed by a specialty concrete repair and rehabilitation (SCRR) contractor that shall have been licensed in the state where the project is located for not less than 10 years.
      b. The SCRR shall be a firm with a minimum of 10 previous and concurrent years of providing maintenance services on structures of similar sizes and types of those included in this specification to ensure the owner that it has the organization, technical skill, quality control, reliability, and financial stability to maintain and guarantee the structures in accordance with the quality required by these specifications.
      c. The SCRR shall be approved and/or certified by the manufacturer of any repair product to be used.
   2. The Society for Protective Coatings (SSPC)
      a. All surface preparation and rehabilitation work shall be performed under the supervision of an SPSS Quality Control Supervisor (QCS) and Concrete Coating Inspector (CCI). QCS and CCI shall be a full-time staff member of the firm with not less than 5 years of experience.
   3. National Association of Corrosion Engineers (NACE)
      a. All surface preparation and rehabilitation work shall be performed under the supervision of a NACE Certified Coating Inspector (CIP) – Level 3. The CIP – Level 3 shall be a full-time staff member of the firm.
   4. Safety
      a. The SCRR firm shall have a full written safety manual to include programs for the following areas of safety: Confined Space, Personal Protective Equipment (PPE), and Scaffold.
      b. All project managers, superintendents, safety personnel, or other supervision representing the SCRR shall be OSHA 30 certified.

B. The coating manufacturer shall furnish an affidavit attesting to the successful use of its material as a coating for concrete structures for a minimum period of 5 years in wastewater headspace conditions equivalent to the different exposures listed in Paragraph 1.2 that are corrosive or otherwise detrimental to concrete and certifying that submitted products are suitable for application on the surfaces and for the service conditions. The affidavit shall also document verification by the manufacturer of the corrosion resistant coating system of the subcontractor's qualification as an approved installer of the specified coating materials and verify that the personnel who will perform this work have been trained to the satisfaction of the selected manufacturer. This affidavit shall also list the application personnel who will work on the

corrosion resistant coating installation covered by this Section. The names of the tradespersons performing surface preparation, clean-up, and other miscellaneous labor functions will not have to be listed on the affidavit.

C. The coating system shall be applied by a qualified applicator trained in handling, mixing and application of the material including the required surface cleaning and preparation. A list of at least five references of projects using the specified coating system shall be provided to the Engineer for review. These references shall include contact names and telephone numbers such that their references can be verified.

D. Field quality control inspection and testing of the coating work will be provided by an independent third-party inspection company (Independent Inspector) in accordance with Part 3 of this Section.

E. The Contractor shall not use or retain contaminated, outdated, or diluted materials for resurfacing. All materials used shall be from new containers not previously opened.

F. The manufacturer's requirements, including application procedures and safety procedures shall be followed in detail and strictly adhered to at all times when the work is in progress.

G. The Contractor shall use only products of the approved manufacturer and shall use products of only one manufacturer in any one system.

H. The Contractor shall make available all locations and phases of the work for access by the Engineer or other personnel designated by the Engineer. The Contractor shall provide ventilation and egress to safely access the coating work.

I. The Contractor shall conduct his/her work such that the coating system is installed as specified herein and as recommended by the coating system manufacturer. Any nonconforming coating system work shall be corrected as specified herein or as recommended by the manufacturer at no additional cost to the Owner.

J. The Contractor is ultimately responsible for the workmanship and quality of the coating installation. Inspections by the Coating Manufacturer, the Engineer, or others does not limit the Contractor's responsibility for the quality of the coating work.

K. If any requirements of this specification are contradicted by a referenced standard or vice-versa, the matter shall be resolved in writing by the Engineer.

L. Mockups: Apply mockups of each coating system indicated to verify preliminary selections made under Sample submittals, to demonstrate aesthetic effects, and to set quality standards for materials and execution.

1. Engineer will select one surface to represent surfaces and conditions for application of each coating system. Engineer will designate items or areas required.

2. Final approval of color selections will be based on mockups.

a. If preliminary color selections are not approved, apply additional mockups of additional colors selected by Engineer at no added cost to Owner.

3. Approval of mockups does not constitute approval of deviations from the Contract Documents contained in mockups unless Engineer specifically approves such deviations in writing.
4. Subject to compliance with requirements, approved mockups may become part of the completed Work if undisturbed at time of Substantial Completion.

1.7 DELIVERY, STORAGE, AND HANDLING

A. Store materials not in use in tightly covered containers in well-ventilated areas with ambient temperatures continuously maintained at not less than 45 deg F.

1. Maintain containers in clean condition, free of foreign materials and residue.
2. Remove rags and waste from storage areas daily.
3. Deliver materials on site in factory sealed containers from the manufacturer. Do not use materials from previous jobs.

1.8 FIELD CONDITIONS

A. Apply coatings only when temperature of surfaces to be coated and ambient air temperatures are within the coatings manufacturer's recommendations.

B. Do not apply coatings when relative humidity exceeds 85 percent; at temperatures less than 5 deg F above the dew point and rising; or to damp or wet surfaces.

C. All new concrete shall be allowed to cure for 28 days minimum before surface preparation activities begin.

D. Apply coatings only when ambient air temperature is between 65 and 95 deg F.

E. Substrate surface temperature – 50 deg F minimum, and at least 10 deg F higher than dew point temperature.

F. No dust generation shall be allowed during this period.

G. Concrete pH shall be between 9.0 and 11.5 or as recommended by the high-performance coating manufacturer.

1.9 WARRANTY

A. The Manufacturer warrants that the product and installation meet that quality and technical standards published in their current literature and be free from defects, including adhesion, bubbling, deterioration or failure of coating for a period of 5 years from date of Substantial Completion.

B. The applicator shall warrant the installed corrosion-resistant coating system as free from material and workmanship defects for a minimum period of 5 years from date of Substantial Completion (at no additional cost to the Owner). The warranty shall include yearly inspections to assess the condition of the new coating system.

PART 2 - PRODUCTS

2.1 MANUFACTURERS

A. Manufacturers: Subject to compliance with requirements, available manufacturers offering products that may be incorporated into the Work include, but are not limited to the following:

1. Sewer Manholes (Severe Exposure)
   a. Raven Lining Systems
   b. Warren Environmental
   c. Sprayroq Inc.

2.2 HIGH-PERFORMANCE COATINGS

A. Material Compatibility:

1. Each coating system within indicated substrates uses compatible material with one another, under conditions of service and application as demonstrated by manufacturer, based on testing and field experience.
2. Topcoat manufacturer recommends products in writing for use in each coating system coat and on indicated substrate.
3. Use products from same manufacturer for each coat in coating system.

2.3 SOURCE QUALITY CONTROL

A. Testing of Coating Materials: Owner reserves the right to invoke the following procedure:

1. Owner will engage services of a qualified testing agency to sample coating materials. Contractor will be notified in advance and may be present when samples are taken. If coating materials have already been delivered to Project site, samples may be taken at Project site. Samples will be identified, sealed, and certified by testing agency.
2. Testing agency will perform tests for compliance with product requirements.
3. Owner may direct Contractor to stop applying coatings if test results show materials being used do not comply with product requirements. Contractor shall remove noncomplying coating materials from Project site, pay for testing, and recoat surfaces coated with rejected materials. Contractor will be required to remove rejected materials from previously coated surfaces if, on recoating with complying materials, both coatings are incompatible.

PART 3 - EXECUTION

3.1 EXAMINATION

A. Examine substrates and conditions, with Applicator present, for compliance with requirements for maximum moisture content and other conditions affecting performance of the Work.

B. Maximum Moisture Content of Concrete Substrates: 12 percent, when measured with electronic moisture meter.

C. Verify suitability of substrates, including surface conditions and compatibility, with existing finishes and primers.

1. Application of coating indicates acceptance of surfaces and conditions.

D. Proceed with coating application only after unsatisfactory conditions have been corrected. Application of coating indicates acceptance of surfaces and conditions.

3.2 CONTROL OF AMBIENT CONDITIONS IN STRUCTURES TO BE COATED

A. Control ambient conditions in the structures to be coated, and provide protective enclosures during surface preparation, application, and curing, to meet the specified conditions. This control work shall be continued throughout the coating system installation and curing.

B. The minimum ambient condition requirements inside the structures for coating system work shall be as follows:

1. During all phases of coating system installation and curing:

a. Air temperature – 65 deg F minimum
b. Relative humidity - below 85%
c. Substrate surface temperature - 50ºF minimum, and at least 10 deg F higher than dew point temperature
d. No dust generation

C. Contractor shall provide ventilation and isolation of each structure to be coated. Contractor shall provide all means necessary to exhaust noxious gases and odors, which may be present during the work.

3.3 PREPARATION

A. Comply with manufacturer's written instructions applicable to substrates and coating systems indicated.

B. Remove hardware, covers, plates, and similar items already in place that are removable and are not to be coated.

1. If removal is impractical or impossible because of size or weight of item, provide surface-applied protection before surface preparation and coating.
2. After completing coating operations, use workers skilled in the trades involved to reinstall items that were removed.
3. Remove surface-applied protection if any.

C. Clean substrates of substances that could impair bond of coatings, including dust, dirt, oil, grease, and incompatible paints and encapsulants.

1. Remove incompatible primers and reprime substrate with compatible primers or apply tie coat as required to produce coating systems indicated.
2. Remove release agents, curing compounds, efflorescence, and chalk. Do not coat surfaces if moisture content or alkalinity of surfaces to be coated exceeds that permitted in manufacturer's written instructions.

D. Surface Preparation of New or Repaired Concrete Substrates

1. Abrasive blast clean or hydro blast clean all new or repaired concrete surfaces to remove all degraded or loose concrete, and to produce a sound, clean substrate free of laitance, surface contaminants, loose materials, or otherwise deleterious substances. Cleaning shall be in accordance with SSPC-SP-13/NACE.
2. Cleaning of new concrete surfaces must produce a minimum, uniform substrate anchor pattern or surface profile between CSP 6 and 7 in accordance with ICRI 310.2.
3. Cleaning of repaired concrete surfaces, after proper cure of resurfacing mortars, must produce a minimum, uniform substrate anchor pattern or surface profile between CSP 4 and 5 in accordance with ICRI 310.2.
4. Should cleaning not remove degraded or loose concrete, chipping or other abrading tools shall be used to remove the deteriorated concrete until a sound, clean substrate is achieved which is free of calcium sulfate, loose coarse or fine aggregate, laitance, loose hydrated cement paste, and otherwise deleterious substances. Abrasive blast cleaning and any other means necessary shall be used to open up all air voids or "bugholes" to expose their complete perimeter and depth. Leaving shelled over, hidden air voids beneath the exposed concrete surface will not be acceptable. Concrete substrate shall be dry prior to the application of any surface filler or coating materials.
5. All new concrete to be coated shall have achieved a minimum of 28 days of cure time prior to coating application.
6. New concrete surfaces shall not have been cured using curing compounds, but rather will have been wet cured.
7. Acceptable surface preparation must produce a concrete surface pH of 9.0 to 11.5 to be confirmed by surface pH testing as specified under Article 3.5.
8. Following inspection of the concrete surface preparation by the Contractor and Independent Inspector, and acceptance by the Engineer, thoroughly vacuum clean all concrete surfaces to be coated to remove all loose dust, dirt, and spent abrasive leaving a dust free, sound concrete substrate. All debris produced by blast cleaning shall be removed from the structures to be coated and disposed of by the Contractor at an approved location in accordance with all applicable local, state, and federal regulations. Inspect again and if specified conditions are met, the Engineer will accept the substrate prior to commencement of coating installation. Blow down cleaning with compressed air will not be acceptable.

E. Surface Preparation of Bare and Coated Metal Substrates Onto Which Lining System Will Terminate

1. The approved coating system for concrete will terminate onto metal substrates at various transitions, embedments and penetrations. Abrasive blast clean all such surfaces to remove all dirt corrosion products, and other substances that would prevent the specified coating adhesion from being achieved. All ferrous metal surfaces (not ductile iron) shall be blast cleaned to a Near White Blast in accordance with SSPC-SP-10. All metal surfaces shall be cleaned to produce a minimum surface profile of 4.0 mils which is uniform.
2. Post Blast Cleaning: Once abrasive blast cleaning has been accepted, proceed as follows:

a. Remove all traces of grit, dust, dirt, rust scale, friable material, loose corrosion products or embedded abrasives from substrate by vacuum cleaning prior to coating system application.
b. Prevent contamination of the concrete or metal surfaces after blasting from workers' fingerprints, deleterious substances on workers' clothing, or from atmospheric conditions. If, after cleaning, contamination occurs, reblast and reclean to achieve specified substrate cleanliness. Care must be taken to hold the specified degree of cleanliness on metal surfaces to prevent rust bloom prior to proceeding with application of the coating materials.

3.4 APPLICATION

A. Apply high-performance coatings in accordance with manufacturer's written instructions.

1. Use applicators and techniques suited for coating and substrate indicated.
2. Coat surfaces behind movable equipment and furniture same as similar exposed surfaces. Before final installation, coat surfaces behind permanently fixed equipment or furniture with prime coat only.
3. Coat backsides of access panels, removable or hinged covers, and similar hinged items to match exposed surfaces.
4. Do not apply coatings over labels of independent testing agencies or equipment name, identification, performance rating, or nomenclature plates.

B. Tint each undercoat a lighter shade to facilitate identification of each coat if multiple coats of the same material are to be applied. Tint undercoats to match color of finish coat but provide sufficient difference in shade of undercoats to distinguish each separate coat.

C. If undercoats or other conditions show through final coat, apply additional coats until cured film has a uniform coating finish, color, and appearance.

D. Apply coatings to produce surface films without cloudiness, spotting, holidays, laps, brush marks, runs, sags, ropiness, or other surface imperfections. Produce sharp glass lines and color breaks.

E. Film Thickness: Apply paint in wet film thickness (WFT) recommended by high-performance manufacturer to achieve specified dry film thickness (DFT) for each coat of paint. Since DFT varies among manufacturers, this reference is not included in Article “Collection Systems Coating Schedule.”

3.5 FIELD QUALITY CONTROL FOR CONCRETE SUBSTRATES

A. General: Field quality control referenced in this Article includes testing of both pre-application quality assurance and post-installation quality control of high-performance coatings. Employ quality approved testing agency to perform testing.

1. Perform Quality Control Testing in the order identified in the following subparagraph.

a. Testing Order: Dry Film Thickness Testing, followed by Adhesion Testing, followed by Holiday Testing.

b. Touch up and restore coated surfaces damaged by testing.
c. If test results show that dry film thickness, holiday, and pull-off strength of applied coating does not comply with coating manufacturer's written instructions, pay for testing, and apply additional coats as needed to provide dry film thickness, pull-off strength that complies with coating manufacturer's written instructions.

B. Quality Assurance Testing:

1. Surface Preparation Testing:

a. Inspect and test condition of substrate for compliance with coating manufacturer's requirements.
b. Measure surface profile using International Concrete Repair Institute (ICRI) 310.2 Comparator Coupons.
c. Test concrete cleanliness by measuring pH of moisture in concrete capillaries.

1) Range of pH for new concrete: 12 to 13.
2) Concrete subjected to acid attack: Below 6 pH.

C. Quality Control Testing:

1. Dry Film Thickness Testing:

a. Engage the services of a qualified testing and inspecting agency to inspect and test coatings for dry film thickness.

2. Adhesion Testing:

a. Field test pull-off strength of coatings on concrete using portable pull-off adhesion testers. Comply with ASTM D7234.

3. Holiday Testing:

a. Field test continuity verification of coatings applied to concrete substrates. Discontinuities include pinholes, internal voids, holidays, cracks, and conductive inclusions. Comply with ASTM D4787.

3.6 CLEANING AND PROTECTION

A. After completing coating application, clean spattered surfaces. Remove spattered coatings by washing, scraping, or other methods. Do not scratch or damage adjacent finished surfaces.

B. Protect work of other trades against damage from coating operation. Correct damage to work of other trades by cleaning, repairing, replacing, and recoating, as approved by Engineer, and leave in an undamaged condition.

C. At completion of construction activities of other trades, touch up and restore damaged or defaced coated surfaces.

3.7 COLLECTION SYSTEMS COATING SCHEDULE

A. Concrete Protection: Sewer Manholes (New or Existing):

1. Severe Exposure: 100% Solids Epoxy System
   a) Raven 405 by Raven Lining Systems
   b) Warren Environmental Epoxy Spray System
   c) SprayWall by Sprayroq Inc.

END OF SECTION 099676.13

This page intentionally left blank.

© 2024 CDM Smith
All Rights Reserved

SECTION 310515 - SOILS AND AGGREGATES FOR EARTHWORK

PART 1 - GENERAL

1.1 RELATED DOCUMENTS

A. Drawings and general provisions of the Contract, including General and Supplementary Conditions and Division 01 Specification Sections, apply to this Section.

1.2 SUMMARY

A. Section Includes:

1. Soils: Soil materials and topsoil materials.
2. Aggregates: Coarse aggregate materials and fine aggregate materials.

B. Related Sections:

1. City of Georgetown Standard Specifications.
2. Section 312000 “Earthwork.”
3. Section G4 “Pipe Excavation, Trenching, Embedment, Encasement and Backfilling.”
4. Section G5 “Granular Fill Materials.”
5. Section G6 “Sedimentation and Temporary Erosion Control.”

1.3 ACTION SUBMITTALS

A. Samples - Soils: Submit in 5-gallon air-tight containers, 50 lbs. sample of each type of fill to testing laboratory when requested by Owner or Engineer.

B. Samples - Aggregates: Submit, in 5-gallon air-tight containers, 50 lbs. sample of each type of aggregate fill to ENGINEER at least 15 days prior to placement of backfill or fill when requested by Owner or Engineer.

C. Quality Control Testing: Submit conformance testing performed by a certified independent laboratory engaged by Contractor for all fill materials. Verify maximum density, gradation, Atterberg limits, sand equivalent, and other applicable criteria at least 72 hours prior to importing or placing any fill. Perform additional conformance testing at a minimum frequency of 1 per every 2,000 cubic yards or change in material.

1.4 INFORMATIONAL SUBMITTALS

A. Materials Source: Submit name and location of imported materials suppliers.

B. Source’s Certificate: Certify materials meet or exceed specified requirements.

C. Material Test Reports: For each on-site and borrow soil and aggregate material proposed for fill and backfill as follows:

1. Classification according to ASTM D2487.
2. Laboratory compaction curve according to ASTM D698 and TEX-113-E.
3. Grain size analyses according to ASTM D422.
4. Atterberg limits (liquid limit, plastic limit, and plasticity index) per ASTM D4318.
5. Test Reports: Submit any test reports required by this Section to Engineer.

1.5 QUALITY ASSURANCE

A. Furnish each subsoil and topsoil material from single source throughout the Work, unless an alternate source is approved by the Engineer.

B. Furnish each coarse and fine aggregate material from single source throughout the Work, unless an alternate source is approved by the Engineer.

C. Perform Work according to City of Georgetown Standard Specifications.

D. Quality Control and Quality Assurance consists of laboratory conformance testing of samples supplied from each coarse and fine aggregate source and quality control during installation.

1. Geotechnical Testing Agency Qualifications: Qualified according to ASTM E329 and ASTM D3740 for testing indicated.

1.6 FIELD CONDITIONS

A. Traffic: Minimize interference with adjoining roads, streets, walks, and other adjacent occupied or used facilities during earth-moving operations.

1. Do not close or obstruct streets, walks, or other adjacent occupied or used facilities without permission from Owner and authorities having jurisdiction.
2. Provide alternate routes around closed or obstructed traffic ways if required by Owner or authorities having jurisdiction.

B. Tree and Plant Protection Zones: Comply with requirements and measures specified in Section 015639 "Temporary Tree and Plant Protection."

PART 2 - PRODUCTS

2.1 SOIL MATERIALS

A. Common Fill:

1. Meet all requirements of common fill in Section G5 “Granular Fill Materials” and supplemented herein.
2. Approved onsite excavated material or imported fill material that is composed of durable soil free of debris, organic matter, or other deleterious materials.

3. Not contain stones larger than 4 inches in largest diameter, have a maximum of 75 percent passing the No. 200 sieve, and a maximum dry density of at least 85 pounds per cubic foot (pcf) as determined by ASTM D698.
4. Not contain granite blocks, broken concrete, masonry rubble, asphalt pavement or other similar materials and have physical properties such that it can be readily spread and compacted during filling.

B. Select Common Fill:

1. Meeting all requirements of select common fill in Section G5 "Granular Fill Materials" and as specified above for common fill.

C. Select Structural Fill: flexible base material complying with TxDOT Item 247, Type A, Grade 3 or better.

D. Concrete pavement and HMA subbase: material complying with TxDOT Item 247, Type A, Grade 1-2.

2.2 TOPSOIL MATERIALS

A. Topsoil: Conforming to the City of Georgetown Standard Specification G7.03.

1. Excavated and reused material or imported borrow.
2. Fertile, friable, natural topsoil typical of topsoil of the locality.
3. Free of roots, rocks larger than 1/2-inch, subsoil, debris, large weeds, and foreign matter.

   a. Screening: Single screened.

4. Containing minimum of 3 percent and maximum of 25 percent inorganic matter.

2.3 AGGREGATE MATERIALS

A. Coarse Aggregate - Crushed Stone: Natural stone; washed, free of clay, shale, organic matter; conforming to ASTM C33 standard.

1. Coarse Aggregate Designation: No. 57.

B. Coarse Aggregate - Roadway Base: Natural stone; washed, free of clay, shale, organic matter; conforming to State of Texas DOT standard Item 247, Type A, Grade 1.

1. Coarse Aggregate Designation: Type A Flexible Base.

C. Coarse Aggregate - Screened Gravel: Natural stone; washed, hard, durable, rounded, or sub-angular particles of proper size and gradation, and shall be free from sand, loam, clay, excess fines, and other deleterious materials, and contain no more than 5 percent by weight of any one or combination of slate, schist, or soft particles of sandstone. Screened gravel is to conform to the following gradation limits:

1. Percent Passing per Sieve Size:

a. 5/8- inch: 100 percent.
b. 1/2-inch: 40 to 100 percent.
c. 3/8-inch: 15 to 45 percent.
d. No. 10: 0 to 5 percent.

D. Coarse Aggregate - Pea Gravel: Natural stone; washed, free of clay, shale, organic matter; graded according to ASTM C136; to the following limits:

1. Percent Passing per Sieve Size:

a. 1/2- inch: 100 percent.
b. 3/8-inch: 90 percent.
c. No. 4: 30 percent.
d. No. 8: 10 percent.
e. No. 16: 5 percent.

E. Fine Aggregate - Sand: Natural river or bank sand; washed; free of silt, clay, loam, friable or soluble materials, and organic matter; graded according to ASTM C33; within the following limits:

1. Percent Passing per Sieve Size:

a. 3/8-inch: 100 percent.
b. No. 4: 95 to 100 percent.
c. No. 8: 80 to 100 percent.
d. No. 16: 50 to 85 percent.
e. No. 30: 25 to 60 percent.
f. No. 50: 10 to 30 percent.
g. No. 100: 2 to 10 percent.

2.4 SOURCE QUALITY CONTROL

A. Testing and Inspection Services: Submit test result reports to Engineer.

B. Subsoil Material - Testing and Analysis: Perform in accordance with ASTM D698.

C. Topsoil Material - Testing and Analysis: Perform in accordance with ASTM D698.

D. Aggregate Material - Testing and Analysis: Perform according to ASTM D698 and TEX-113-E, as specified elsewhere.

E. When tests indicate materials do not meet specified requirements, change material and retest.

F. Furnish materials of each type from same source throughout the Work.

© 2024 CDM Smith
All Rights Reserved

PART 3 - EXECUTION

3.1 EXCAVATION

A. Excavate subsoil and topsoil from areas designated. Strip topsoil to full depth of topsoil in designated areas.

B. Stockpile excavated material meeting requirements for subsoil materials and topsoil materials.

C. Remove excess excavated materials not intended for reuse, from site.

D. Remove excavated materials not meeting requirements for subsoil materials and topsoil materials from site.

3.2 STOCKPILING

A. Stockpile materials on site at locations designated by Engineer or Owner's representative.

B. Stockpile in sufficient quantities to meet Project schedule and requirements.

C. Separate different soil and aggregate materials with dividers or stockpile individually to prevent mixing. Prevent intermixing of soil types or contamination.

D. Stockpile topsoil 8 feet high maximum.

E. Direct surface water away from stockpile site to prevent erosion or deterioration of materials.

3.3 STOCKPILE CLEANUP

A. Remove stockpile, leave area in clean and neat condition. Grade site surface to prevent free standing surface water.

END OF SECTION 310515

This page intentionally left blank.

© 2024 CDM Smith
All Rights Reserved

SECTION 310900 - GEOTECHNICAL INSTRUMENTATION AND MONITORING

PART 1 - GENERAL

1.1 RELATED DOCUMENTS

A. Drawings and general provisions of the Contract, including General and Supplementary Conditions and Division 01 Specification Sections, apply to this Section.

1.2 SUMMARY

A. Section includes performing pre-construction surveys and installing and monitoring geotechnical instrumentation and survey markers to measure.

1. Performance of excavation support systems.
2. Performance of trenchless installations. Groundwater levels inside and outside excavation limits.
3. Vertical deformation of ground surface adjacent to and directly over the Work.
4. Vertical and horizontal deformation of existing utilities and structures adjacent to and over the Work.
5. Ground vibration levels at adjacent facilities due to Contractor activities, including but not limited to rock excavation.

B. Related Requirements:

1. City of Georgetown Standard Specifications.
2. Section 312000 "Earthwork" for excavating, backfilling, and compaction in open areas.
3. Section 312316 "Rock Removal" for removal of existing rock.
4. Section 312319 "Dewatering" for dewatering and drainage.
5. Section G4 “Pipe Excavation, Trenching, Embedment, Encasement and Backfilling” for those procedures.
6. Section 315000 "Excavation Support and Protection" for temporary support of excavation.

1.3 DEFINITIONS

A. Crack Gauges: Transducers mounted across cracks identified on existing structures during the preconstruction survey to monitor the crack width.

B. Deformation Monitoring Points (DMPs): Fixed markers placed on existing utilities and structures to measure both vertical and horizontal movement. Initial coordinate locations and vertical controls are determined by optical survey methods.

C. Excavation Support Monitoring Points (ESMPs): Inscribed marking or fixed makers placed on excavation support systems to measure horizontal movement of the excavation support system.

D. Groundwater Observation Wells: Screened or slotted pipe with solid riser pipe installed in a drilled hole with the annulus around the pipe backfilled with sand. Near surface groundwater levels are measured in the well.

E. Seismographs: Electronic recording device with vibration transducer capable of monitoring and recording ground vibrations induced by construction activity.

F. Surface Monitoring Points (SMPs): Inscribed marking or approved surveyor's nail installed to measure vertical (elevation) movement.

1.4 ACTION SUBMITTALS

A. Submit for the Engineer's review four weeks prior to instrument installation:

1. Installation Plan and Schedule: Full details and plan/layout of proposed instruments/points, schedule for installing and monitoring instruments/points, equipment types, installation methods, reference points, and monitoring and data reporting schedule for instruments/points, and instrumentation protection.
2. Description of methods for installing and protecting all instrumentation including but not limited to seismographs, observation wells, crack gauges, monitoring points, and reference points.
3. Groundwater observation well construction details including casing type, filter gradation, screen interval, grout mix, drilling methods, and well depths.

B. Installations Records: Within five working days of installing each instrument, submit to the Engineer, specified as-built instrument location and its corresponding installation record sheet.

1. Include in installation record sheet, location with instrument identification numbers, established elevations, initial elevations and coordinates (baseline readings), boring log, installation, and monitoring date and time.
2. Furnish details of installed instruments showing dimensions, materials used, and as-built drawings of each instrument.
3. Submit field calibrations.

C. Reports and Records: Provide reports of monitoring data to the Engineer. include following minimum information:

1. Preconstruction survey.
2. As-installed location plan, installation records, and baseline values for instrumentation.
3. Monitoring data for instruments with plots against threshold values.
4. Weekly records of crack monitors and including photographs with readings.
5. Event reports and summary from vibration monitoring.
6. Discussion and associated action related to results exceeding threshold values.

D. Submit proposed remedial measures to the Engineer of action to be taken in event that instrument Threshold Values are reached.

1.5 INFORMATIONAL SUBMITTALS

A. Submit names, qualifications, and experience of personnel who will install instruments, perform optical level survey and vibration monitoring, read instruments, and report data to the Engineer demonstrating compliance with "Quality Assurance" Article in this Section.

B. Certificates: Submit for each seismograph or other necessary instrument that manufacturer has inspected and tested each instrument before it leaves the factory confirming that it is working correctly without defects or missing parts and current calibration records.

1.6 QUALITY ASSURANCE

A. Geotechnical Instrumentation Engineer Qualifications: Professional engineer registered in State of Texas with at least 5 years' experience in installation of specified instrumentation and will supervise and direct technicians and be responsible for instrument installation. Be present at installation sites to direct and supervise installations, oversee instrumentation reading, and supervise geotechnical instrumentation data interpretations.

B. Surveyor Qualifications: Professional Land Surveyor registered in State of Texas with at least 3 years' experience in surveying of similar instruments. Establish Deformation Monitoring Points, Surface Monitoring Points, and Excavation Support Monitoring Points and take baseline readings.

C. Groundwater Well Driller: Groundwater well driller, licensed in the State of Texas with at least 3 years' experience in drilling, installing, and abandoning groundwater wells. Responsible for obtaining all required permits for well installation and abandonment and responsible for performing the work.

D. Manufacturer Qualifications: Provide instruments and components from an approved manufacturer currently engaged in manufacturing specified geotechnical instrumentation hardware.

E. Preconstruction Survey Engineer Qualifications: Professional engineer registered in State of Texas with at least 5 years' experience in structural evaluations and condition surveys.

F. Monitoring Technicians Qualifications: Minimum 3 years' experience for personnel responsible for optical level surveys, instrument readings, and report data.

G. Vibration Monitoring Qualifications: Persons trained in use of a seismograph along with reporting results of analyzing and reporting frequency content of a seismograph record.

H. Instrument Installation Technicians: Experienced in installation and reading of specified geotechnical instrumentation and equipment.

I. Factory Calibration: Conduct factory calibration on instruments prior to shipment with certification submitted to indicate that test equipment used for this purpose is calibrated and maintained in accordance with test equipment manufacturer's calibration requirements and that, where applicable, calibrations are traceable to U.S. National Institute of Standards and Technology.

1. Include a calibration curve with data points clearly indicated and a tabulation of data. Mark each instrument with a unique identification number.

J. Perform instrument installations in presence of the Engineer.

K. Be responsible for installation, maintenance, and monitoring of geotechnical instrumentation.

PART 2 - PRODUCTS

2.1 DESIGN AND PERFORMANCE REQUIREMENTS

A. Project Requirements:

1. Install geotechnical instrumentation to monitor ground conditions, ground response, and facilities to achieve specified project requirements and prevent damage to facilities potentially affected.
2. Install instrumentation in accordance with approved Instrumentation Schedule.
3. Engineer's monitoring of installed instruments does not relieve Contractor of its obligation to complete project within the requirements specified herein taking necessary additional measurements.

B. Pre-Construction Survey:

1. Prior to start of demolition, excavation work, installation of excavation support and dewatering work, engage the services of an independent licensed professional engineer, to conduct a pre-construction survey of existing structures and conditions within 100 feet of the anticipated demolition, excavation work, trenchless crossings, installation of excavation support, and dewatering work.

    a. Coordinate activities, issue notices, obtain clearances and provide photographic and secretarial assistance necessary to accomplish the survey.
    b. Give notice in writing, to property owners and representatives of local authorities required to be present at such survey. Notify in writing the dates on which surveys are planned so that representatives are present during the examination. Provide copies of notices to Owner and the Engineer

2. Record observations of the existing conditions for residences, buildings and other structures, which are affected.

    a. Provide the survey consisting of a description of interior and exterior conditions. Locate cracks, damage or other defects existing and include information to make it possible to determine the effect, if any, of the construction operations on the defect. Where significant cracks or damage exists, or for defects too complicated to describe in words, photographs shall be taken and made part of the record.
    b. Records of each property examined must be signed by the representatives present and, if practicable, by property owners, whether or not they are present at the examinations.

3. Record of the pre-construction survey is to consist of written documentation, video and photographs of the conditions identified. At the completion of the survey, submit copies of the documentation to Owner.
4. Upon completion of all excavation work, installation of excavation support and dewatering work, the complete a similar examination of properties and structures where complaints of damage have been received or damage claims have been filed. Give notice to interested parties so that they may be present during the final examinations. Records of the final examination are to be signed and distributed as the original pre-construction survey.
5. Retain records in Contractor's file for at least 3 years after completion of the Contract. In the event of damage claims, prepare a report on the particular structures as requested by the Engineer from those notes and photographs and submitted to Owner. Repair damage attributed to Contractor's activity promptly and completely to property owners' satisfaction to restore the conditions of the property to that existing prior to work.

C. Secure required permits prior to the installation or removal of observation wells.

D. Provide and facilitate safe access to the instruments at all times. Engineer may perform additional monitoring in a manner that will minimize unnecessary work delays. Allow and facilitate instrument monitoring as required by the Engineer. No claim for lost production time due to this activity will be allowed.

E. Maintain instrumentation. Report damaged or non-functional instrumentation to the Engineer within 24 hours. Replace damaged instruments within 24 hours.

F. Availability of Data:

1. Instrumentation readings shall be collected by the Contractor's geotechnical instrumentation monitoring firm. Contractor may take their own supplementary readings in addition to those specified.
2. Monitoring data is the property of Owner and is not to be disclosed or published to third parties without Owner's written permission.
3. Contractor is expected to make their own interpretations for their own purposes without additional compensation.
4. Coordinate with the Engineer to verify consistency of collected data.

2.2 INSTRUMENTATION - GENERAL

A. Instruments and materials, including readout units, installation tools, materials, and miscellaneous instrumentation components.

B. Provide surface protection for instruments flush with surface in paved or other ground surface areas at the time that work is completed.

C. Minimum Quantity of Instruments: While quantities in following Paragraph are considered minimums, obtain data from instrumentation in quantity to monitor construction, performance, and safety aspects of the Work.

D. Following subparagraphs identify instrument type, minimum number to be provided, and approximate installed depth from below bottom of excavation / tunnel invert:

	Instrument Type:	Number:	Depth:
1.	Observation Wells:	(as req'd based on Contractor's plan)	
2.	Seismographs:	(as req'd to monitor rock excavations)	
3.	Surface Monitoring Points:	15	N/A.
4.	Deformation Monitoring Points:	5	N/A.
5.	Excavation Support Monitoring Points:	As Needed	N/A.
6.	Crack Gauges	(as req'd to monitor existing cracks)	

E. Locate instruments and obtain approval from the Engineer.

2.3 GROUNDWATER OBSERVATION WELLS

A. Pipe: ASTM D1785, Schedule 40 PVC pipe, 1-inch minimum inside diameter.

B. Maximum Screen Size: 0.020 inch, unless otherwise approved by the Engineer.

C. Use observation wells to monitor groundwater levels outside excavations.

2.4 MONITORING POINTS

A. Surface Monitoring Points (SMPs):

1. Use to monitor vertical deformation at or near ground surface, clearly identifying points with permanent easily readable letters and numbers as approved by the Engineer.
2. Paved Areas: 2 inches long masonry nail, manufactured from hardened zinc–plated steel and driven into an asphalt covered surface. Identify each nail individually with an identification tag or surface marking.
3. Non-Paved Areas: 3 feet 3/4-inch diameter steel rod driven into ground or set in concrete such that no more than 3 inches of rod is exposed above ground surface. Round top of rod and punch-mark it at its center. Identify each rod with a surface marking.
4. Utility Manholes: Observable cross mark or welded bead on top horizontal surface of manhole rim. Clean surface within 3 inches of point and mark it using fluorescent spray paint adjacent to point to permit easy identification of exact location.

B. Deformation Monitoring Points (DMPs):

1. Use to monitor vertical and horizontal movement of adjacent utilities and structures with following approved by the Engineer.
2. Materials: Nails, screws, reinforcing bars, bolts, and similar materials with well-defined measurement points.
3. Firmly attach and protect from damage and vandalism. Remove or cover points protruding more than 1/4 inch with a protective box or cap.
4. Clearly identify with permanent easily readable letters and numbers.

C. Excavation Support Monitoring Points (ESMPs):

1. Use as fixed markers on vertical elements of excavation support system and to monitor horizontal deformation of excavation support system designed by Contractor.

2. Clearly identified points with permanent easily readable letters and numbers as approved by the Engineer.
3. Clean surface within 3 inches of each point and clearly identify using fluorescent spray paint adjacent to point.

D. Non-Shrink Cement Grout: Suitable for intended application.

2.5 SEISMOGRAPHS

A. Portable for monitoring ground vibrations velocities resulting from construction activities, calibrated within the previous six months, and having following characteristics:

1. Measure three mutually perpendicular components of particle velocity in directions vertical, radial, and perpendicular to vibration source.
2. Measure and display maximum peak particle velocity continuously during vibration-generating activities.
3. Have a low frequency omnidirectional transducer for measuring air blast overpressure with a flat frequency response within the limits of 2 Hertzto200 Hertz with a tolerance equal to or better than plus or minus 10 percent.
4. Seismic Range: 0.01 inchto4 inches per second with an accuracy of plus or minus 5 percent of measured peak particle velocity or better at frequencies between 10 Hertz and 100 Hertz, and with a resolution of 0.01 inch per second or less.
5. Acoustic Range: 110 dB to 140 dB (referenced to 20 micro-Pascals) with an accuracy and resolution of plus or minus 1 dB.
6. Frequency Response (plus or minus 3 dB: 2 Hertz 200 Hertz.
7. Two Power Sources: Internal rechargeable battery and charger capable of supplying power to monitor vibrations continuously for up to 24 hours at 115 volts AC.
8. Self-triggering wave form capture mode that provides plot of wave forms, peak particle velocities, peak overpressure, and frequencies of peaks.
9. Continuous monitoring mode capable of recording single-component peak particle velocities and frequency of peaks with an interval of 1 minute or less.

B. Provide for full-time use on the project during vibration causing construction activities, including but not limited to rock excavation within 50 feet of existing structures, utilities or other facilities.

2.6 CRACK MONITORS

A. Crack Gauges:

1. Threaded Anchors: Include ball joints which can be grouted to each side of crack in any orientation.
2. Transducer: Range of at least 1 inch and an accuracy of less than 0.1 percent and a non-linearity of no more than 0.5 percent.
3. Gauge: Capable of operating in temperatures ranging from minus 68 degrees F 176 degrees F.

B. Provide a solid steel cover over each gauge which does not touch or otherwise interfere with gage operation.

C. Basis-of-Design Manufacturer - Crack Gauges: Provide Model 4420 as manufactured by Geokon, Inc., or equal for monitoring width of existing cracks and joints.

PART 3 - EXECUTION

3.1 EXAMINATION

A. Examine areas and conditions, with the Engineer present, for compliance with requirements for installation tolerances and other conditions affecting performance of the Work.

B. Proceed with installation only after unsatisfactory conditions have been corrected.

3.2 PREPARATION

A. Existing Conditions: Locate vaults, structures, conduits and underground utilities in areas where wells are to be drilled and installed. Conduct utility clearance and contact utility companies prior to any drilling.

1. Modify instrument locations, as approved by the Engineer, to avoid interference with existing vaults, structures, conduits and utilities.
2. Repair damage to existing facilities resulting from instrument installations without additional compensation.

B. Prior to commencing installation of excavation support, excavation, rock excavation, and dewatering work, furnish instrumentation and related components that are to be installed during construction and conduct pre-construction surveys.

C. Protect from damage and maintain instruments. Repair or replace damaged instruments.

D. Drilling from Ground Surface: Obtain necessary permits for each instrument and conform to permit requirements during drilling and installation.

E. Implement remedial measures based on interpretations of monitoring data program.

3.3 GENERAL REQUIREMENTS

A. Perform a pre-construction survey prior to any dewatering, excavation, trenchless crossings, or installation of excavation support.

B. Install instruments at the Engineer approved locations in accordance with approved installation procedures. Engineer may modify instrument locations depending on field conditions and monitoring objectives. Install instrumentation in accordance with approved installation schedule. Install instruments and obtain baseline data before construction starts.

C. Allow the Engineer access to instrument locations and assistance required in obtaining monitoring data.

D. Clearly mark and label instruments and protected to avoid being obstructed or otherwise damaged by construction operations or general public. Immediately following installation, survey location and top of instruments to provide horizontal and vertical coordinates.

1. Resurvey if the Engineer questions instrument locations.

E. Assign a unique identification number to each instrument and each point that is clearly marked in a non-destructible manner.

F. Initial Reading: Immediately following instrument installation take two sets of initial readings in the Engineer's presence to provide baseline readings and to demonstrate adequacy of completed installation.

3.4 MONITORING POINTS

A. Monitoring Points: Include but not be limited to SMPs, DMPs, and ESMPs. Monitor these control points using surveying methods. Modify locations to meet site constraints with the Engineer's approval.

B. SMPs and DMPs: Install as described below near excavations and trenchless crossings and open trench locations. Additional SMPs and DMPs may be required by the Engineer.

C. Additional SMPs:

1. Install in pavement or ground surface within 5 feet along each side of trench excavations that is over 12 feet deep or that is within 50 feet of structures. Install at spacing not exceeding 100 feet.
2. Install on rim of utility manhole covers located within 50 feet of trenchless crossings or within 30 feet of open excavations.
3. Along trenchless crossing alignments, install at intervals of not more than 10 feet over proposed trenchless crossing locations directly above the alignment.

D. DMPs:

1. Install on exterior walls of buildings or structures located within 30 feet of open excavations. Preferred installations are on supporting walls or columns. Avoid installation in brick, unless no other option exists.
2. As a minimum, install on exterior wall corners of buildings, structures, or property boundary walls at not more than 50 feet spacing. Install additional DMPs to monitor building movement at other locations when determined by the Engineer.
3. Install DMPs in cooperation with property Owners so that installations are inconspicuous and acceptable to them. Existing features of building foundations that are permanent and can be repeatedly surveyed may be substituted for DMPs, if approved by the Engineer.

E. ESMPs:

1. Install on excavation support systems other than trench box along support walls at spacing not more than 25 feet.
2. Install prior to excavation within exaction support system.
3. Read results at least daily during associated excavation and twice a week until backfill is completed.

F. SMPs and DMPs:

1. Obtain two sets of measurements for each monitoring point to establish baseline data within three days of installation. Make at least 24 hours apart, but not more than 48 hours.
2. Check monitoring points with initial surveyed elevations or offsets (as appropriate) differing by more than 0.08 inch for secure installation and resurvey.
3. Read monitoring points prior to installing excavation support, beginning, excavation, operation of groundwater control system, , or start of installation of excavation support at the site.
4. Read daily during excavation, dewatering, filling and backfilling, rock excavation, trenchless excavation and excavation support installation located within 50 feet of the work, then at least twice a week until excavation, dewatering, and backfill has been completed.
5. Trenchless Crossing Operation: Survey once per day starting at least 2 days prior to start of trenchless excavations and extend at least 15 days after crossing completion.

G. Crack Gauges:

1. Install on exterior walls of buildings or structures with existing cracks located within 30 feet of open excavations.
2. Install DMPs in accordance with manufacturer's recommendations and in cooperation with property Owners so that installations are inconspicuous and acceptable to them.

3.5 VIBRATION MONITORING

A. Take seismograph readings during rock excavation and excavation support installation or other activities causing ground vibrations within 50 feet of existing structures to document that peak particle velocities do not exceed specified limit criteria.

B. Install seismographs near existing structures when vibratory or impact hammers are used for the installation of excavation support within 50 feet of existing structures, and as directed by the Engineer.

3.6 GROUNDWATER OBSERVATION WELLS

A. Install monitoring wells at site as included in the dewatering submittal and Contractor's plan.

B. Existing wells (if present) may be used if appropriate and approved by the Engineer.

C. Set screened interval of each well to monitor groundwater levels.

D. Obtain the services of a groundwater well driller licensed in the State of Texas and drill 4 inch minimum diameter holes for observation wells of required size and depth and case with temporary casing. Do not use bentonite drilling mud in drilling holes for observation wells.

E. Flush cased holes with clean water through an approved bit. Flush until discharge water is free of soil particles.

F. Construct observation well with 10 feet of slotted PVC well screen, filter sand, bentonite seal, couplings, a pipe cap, and a locking cover.

1. Place two feet of filter sand in bottom of drilled hole. Then place well screen and surround it with filter sand, as temporary casing is carefully withdrawn.
2. Insert solid PVC casing and cap and fill annular space with bentonite pellets then non-shrink cement grout.
3. Protect observation wells at ground surface by providing a roadway box or outer protective casing with lockable top and padlock. Design surface protection to prevent damage by vandalism or construction operations and to prevent surface water from infiltrating.

    a. Provide two keys for each padlock to the Engineer for access to each well.
    b. Develop observation wells to provide a reliable indication of groundwater levels. Re-developed wells if well clogging is observed, in event of apparent erroneous readings, or as directed by the Engineer.
    c. Submit observation well installation logs, top of casing elevation, and well locations to the Engineer within 24 hours of completion of well installation.

G. Observation Well Maintenance:

1. Maintain each observation well until adjacent structures and pipelines are completed and backfilled. Clean out or replace any observation well which ceases to be operable before adjacent work is completed.
2. Maintain observation wells and repair or replace them without additional compensation, whether or not observation wells are damaged by Contractor's operations or by third parties.

H. Monitoring and Reporting of Observation Well Data:

1. Begin daily monitoring of groundwater levels in work areas prior to initial operation of drainage and dewatering system. Continue daily monitoring in areas where groundwater control is in operation until time that adjacent structures and pipelines are completed and backfilled and until time that groundwater control systems are turned off.
2. Be responsible for processing and reporting observation well data to the Engineer daily. Submit data to the Engineer on a form that includes following information.

    a. Observation well number.
    b. Depth to groundwater.
    c. Top of casing elevation.
    d. Groundwater level elevation.
    e. Date and time of reading.
    f. Lake level that may impact readings.

I. Following construction, abandon new and existing wells as directed by the Engineer.

1. Abandon observation wells by removing materials within original borehole, including casing, filter, and grout seal in accordance with applicable permits.
2. Using approved tremie methods, completely fill hole and voids with non-shrink cement grout prior to removal of drill casing, such that formation materials do not move into hole prior to grouting.
3. Restore ground surface to its original condition.

4. Abandon wells within paved areas by removing vaults and well caps to pavement subgrade.
5. Remove wells with as discussed above and repair or patch pavement with same surface type.

3.7 INSTRUMENT PROTECTION, MAINTENANCE AND REPAIR

A. Protect instruments from damage. Replace damaged or destroyed instruments within 72 hours of damage, without additional compensation. If necessary, suspend work in areas being monitored by damaged instrument and take remedial action.

B. Maintain instruments by draining water and flushing debris from under protective covers and keeping covers locked and sealed at all times.

3.8 MONITORING

A. Collect, tabulate, plot, and interpret survey monitoring data and provide the Engineer with tabulated and plotted data. Report status of excavation, bracing, groundwater levels, and backfilling at time of data collection with each report.

B. Monitoring frequency may be modified as directed and approved by the Engineer.

C. Submit data from readings of monitoring points to the Engineer within 24 hours of reading. Communicate verbally with the Engineer immediately after visual observations or data collection if excessive movements or other anomalies are indicated.

D. For seismograph data, submit a summary report with event summary of peak particle velocity and frequency. Submit a strip chart indicating time and magnitude of maximum single-component peak particle velocity measured during each 5-minute interval of monitoring period. List a summary of vibration producing activities for that week along with specific events causing anomalous readings.

E. Make visual observations of ground conditions and building conditions in site vicinity and communicate immediately with the Engineer if signs of ground or building movements are observed.

F. Engineer may take independent instrumentation measurements. Cooperate with the Engineer during instrumentation monitoring by providing access to instrumentation locations in a timely manner and by providing and maintaining safe means of access to instrumentation locations for data collection. Data acquired by the Engineer will be made available to Contractor in a timely manner.

G. Contractor may make their own interpretations of monitoring data for their own purposes. Do not publish or disclose data or interpretations shall to other parties without advance written permission of Owner.

H. For data collected from an instrument that has been installed to replace a damaged instrument, use formal initial reading as an initial reading for replacement instrument so that data are continuously plotted, without an offset at time of damage. Note time of damage and replacement on plot.

© 2024 CDM Smith
All Rights Reserved

3.9 INTERPRETATION AND RESPONSE VALUES

A. Make interpretations of data resulting from monitoring programs.

B. Threshold and Limiting Values for Instruments:

	Instrument	Threshold Value	Limiting Value
1.	Seismographs:	1.0 in/sec over 40 Hz 0.75 in/sec at 30 to 40 Hz 0.50 in/sec at 20 to 30 Hz 0.25 in/sec under 20 Hz	2.0 in/sec over 40 Hz 1.5 in/sec at 30 to 40 Hz 1.0 in/sec at 20 to 30 Hz 0.5 in/sec under 20 Hz
2.	Surface Monitoring Points:	0.5 inch	1.0 inch
3.	Deformation Monitoring Points:	0.25 inch	0.5 inch
4.	Excavation Support:	1.0 inch	2.0 inches
5.	Observation Wells	2 feet *	2 feet **

NOTES: * below bottom of excavation.
** at bottom of excavation.

C. Values are subject to adjustment by the Engineer as indicated by prevailing conditions or project circumstances. Crack Gauge criteria will be established based upon existing conditions identified during preconstruction survey.

D. If a Threshold Value is reached:

1. Engineer and Contractor will meet to discuss remedial measures.
2. Increase instrument monitoring frequency as directed by the Engineer.
3. Install and monitor additional instruments as directed by the Engineer.
4. Implement remedial measures in event Threshold Value is reached, so Limiting Value is not reached.

E. Take necessary steps so Limiting Value is not exceeded. Engineer may direct Contractor to suspend activities in affected area with exception of those actions necessary to avoid exceeding Limiting Value.

3.10 TOLERANCES

A. Survey Measurements: Initial location of each instrumentation elements consisting of determining elevation and horizontal positions with respect to the Engineer approved benchmarks.

B. Monitoring Points (SMPs, DMPs and ESMPs):

1. Instrumentation Elevations: Determine to accuracy of plus/minus 0.01 foot
2. Horizontal Position of Surface Monitoring Points: Determine to accuracy of plus/minus 0.1 foot

3. Horizontal Position of Deformation Monitoring Points and Excavation Support Monitoring Points: Determine to accuracy of plus/minus 0.01 foot

C. If actual field conditions prohibit installation at location and specified elevations, obtain prior acceptance from the Engineer for new instrument location and elevations.

3.11 DISPOSITION OF INSTRUMENTS

A. Monitoring Points and Crack Gauges: Remove monitoring points and crack gauges during cleanup and restoration work, unless directed otherwise by the Engineer.

B. Observation Wells: When required by the Engineer, obtain the services of a licensed well driller in the State of Texas to abandon and remove protective housings and caps in accordance with required permits. Restore surfaces affected by installation of instruments to their original condition prior to completion of work.

1. Leave in place any casings located within plan limits of new or existing structures or pipelines or within zone below 1H:1V planes extending downward and out from edges of foundation elements, from downward vertical footprint of pipe, or where removal would otherwise result in ground movements causing adverse settlement to adjacent ground surface, utilities or structures.
2. Where casings are pulled, fill holes using tremie-methods with non-shrink cement grout. Where left in place, fill casings using tremie-methods with non-shrink cement grout and cut off a minimum of 3 feet below finished ground level or 1 foot below foundation level so as not to interfere with finished structures or pipelines.
3. Following backfilling, remove precast boxes or vaults and reconstruct pavement in paved areas. Restore surface to conditions existing prior to instrument installation.
4. Notify state regulatory agency with applicable well abandonment/closure permit.

C. Seismographs: Remove units following completion of rock excavation, installation of excavation support and excavation.

END OF SECTION 310900

© 2024 CDM Smith
All Rights Reserved

SECTION 312000 – EARTHWORK

PART 1 - GENERAL

1.1 RELATED DOCUMENTS

A. Drawings and general provisions of the Contract, including General and Supplementary Conditions and Division 01 Specification Sections, apply to this Section.

1.2 SUMMARY

A. General: Earthwork includes clearing and stripping, procurement of on-site and imported fill material, excavating, placing, and compacting fill and backfill, structural excavating and backfilling, transportation, and storage of excess earthwork materials; disposal of unsuitable, waste, and surplus materials; restoration of excavation and trench surfaces; and subsidiary work necessary to complete the grading of developed areas to conform with required lines, grades, and slopes.

B. Work includes but is not necessarily limited to; excavation for structures, tanks, foundations, manholes, vaults, electrical manholes, conduits, cables, raceways and ducts, pipes, paving; embankments; grading; and related work such as sheeting, bracing, and dewatering.

C. Provide services of a licensed Professional Engineer, registered in the State of Texas, to prepare temporary excavation support system, dewatering system designs, and submittals.

D. Provide temporary excavation support systems, including sheeting, shoring, and bracing, to ensure the safety of personnel and protect adjacent structures, piping, and other materials in accordance with Federal, State, and local laws, regulations, and requirements. Temporary excavation support systems are specified in Section 315000 “Excavation Support and Protection.”

E. Provide temporary dewatering, surface water control systems, and operate to dewater and maintain excavations in a dry condition. Control drainage into excavations and remove seepage water and rainwater. Dewatering and surface water control are specified in Section 31 23 19 “Dewatering.”

F. Examine site and review available geotechnical report prior to submitting a proposal, taking into consideration project conditions that may affect the work. Owner and Design Engineer do not assume responsibility for variations of subsurface conditions at locations other than places shown and at the time investigations were made.

G. Owner to provide field testing for compaction of subgrade and fill materials by an independent testing laboratory. The costs of this testing to confirm compliance with this Section will be paid by Owner. Should any test fail to meet the requirements of this section, that work shall be repaired and retested. Retesting will be at the Contractor’s expense.

H. Do not initiate extra work without written notification to Owner and Engineer and receiving Owner’s written approval in response.

I. Excavation includes material of every description and of whatever substance encountered regardless of the methods or equipment required to remove the materials.

J. Protect existing structures and utilities that remain.

K. Related Requirements:

1. Section G5 “Granular Fill Materials” for fill materials.
2. Section 310515 “Soils and Aggregates for Earthwork” for fill materials.
3. Section G3 "Site Clearing" for site preparation work, including stripping, grubbing, stripping and stockpiling topsoil, and removal of above- and below-grade improvements and utilities.
4. Section G4 “Pipe Excavation, Trenching, Embedment, Encasement and Backfilling” for stated work.
5. Section 312316 “Rock Removal” for excavation of rock and boulders.
6. Section 312319 "Dewatering" for controlling surface and groundwater and disposing of water during construction.
7. Section 312323 "Flowable Fill”
8. Section G6 “Sedimentation and Temporary Erosion Controls” for temporary stated work.
9. Section 315000 "Excavation Support and Protection" for shoring, bracing, and sheet piling of excavations.

1.3 DEFINITIONS

A. Backfill: Soil material or controlled low-strength material used to fill an excavation.

1. Initial Backfill: Backfill placed beside and over pipe in a trench, including haunches to support sides of pipe.
2. Final Backfill: Backfill placed over initial backfill to fill a trench.

B. Borrow Soil: Satisfactory soil imported from off-site for use as fill or backfill.

C. Coverage: Pass of compaction equipment over the complete surface area of exposed lift or subgrade to receive compaction.

D. Excavation: Removal of material encountered above subgrade elevations and to lines and dimensions indicated.

1. Authorized Additional Excavation: Excavation below subgrade elevations or beyond indicated lines and dimensions as directed by Engineer. Authorized additional excavation and replacement material will be paid for according to Contract provisions for changes in the Work.
2. Unauthorized Additional Excavation: Excavation as directed by Engineer to correct Contractor’s work not in compliance with Contract Documents, which will be performed without additional compensation.
3. Bulk Excavation: Excavation more than 10 feet in width and more than 30 feet in length.
4. Unauthorized Excavation: Excavation below subgrade elevations or beyond indicated lines and dimensions without direction by Engineer. Unauthorized excavation, as well as remedial work directed by Engineer, shall be provided without additional compensation.

E. Finished Grade: Required final grade elevation indicated on Drawings. Spot elevations take precedent over proposed contours.

F. In-the-Dry: An excavation subgrade where groundwater level: has been lowered to at least 2 feet below lowest level of excavation; is stable with no ponded water, mud, or muck; is able to support construction equipment without rutting or disturbance; and is suitable for placement and compaction of fill material, pipe, or concrete foundations.

G. Objectionable Material: Includes topsoil, organic matter, contaminated soil, construction debris, perishable materials, snow, ice, frozen earth, and rocks or lumps of cemented soils over 6 inches in maximum dimension.

H. Optimum Moisture Content: Moisture content (percent by dry weight) corresponding to maximum dry density of the same material as determined by ASTM Test Method D698.

I. Overexcavation: Removal of unsuitable soil or objectionable material at or below the normal grade of excavation or subgrade as indicated on Drawings.

J. Percent Compaction: Required in-place dry density of the material, expressed as a percentage of the maximum dry density of the same material, as determined in the laboratory by ASTM Test Method D698.

K. Structural Fill: Backfill which is placed against the exterior side of the structure walls.

L. Structures: Buildings, wet wells, footings, foundations, retaining walls, slabs, tanks, curbs, mechanical and electrical appurtenances, manholes and vaults, or other man-made stationary features constructed above or below the ground surface.

M. Subgrade: Required surface of subsoil, borrow fill, or compacted fill that is immediately beneath site improvements, especially dimensioned fill, paving, or other surfacing material.

N. Unsuitable Soil: Includes existing fill materials, organic soils, weak native soils, or clays with a plasticity index of greater than 30, and any materials that cannot be properly placed and compacted as specified.

O. Utilities: On-site underground pipes, conduits, ducts, and cables as well as underground services within buildings.

P. Zone of Influence: A line extending at least 2 feet beyond foundation or pipeline edge, then outward and downward at a slope of 1 horizontal to 1 vertical. Do no excavation below foundation of existing structures or pipeline.

Q. Professional Engineer: Professional Engineer registered in State of Texas, meeting project qualifications, and who is hired by Contractor.

R. Professional Geologist: Registered Professional Geologist meeting project qualifications and who is hired by Contractor.

S. Qualified Geophysical Testing Firm: A firm with a Professional Geologist licensed in the State of Texas with a minimum of 5 years of experience performing geophysical testing, including ground penetrating radar (GPR) and other applicable test methods to identify potential

subsurface voids. This firm will be hired by the Contractor and is to provide independent site evaluation.

T. The Engineer: The Engineer or designated representative hired by Owner.

1. Approval given by the Engineer shall not relieve Contractor of its responsibilities for performing the work in accordance with Contract Document requirements.

1.4 ACTION SUBMITTALS

A. Coordinate various submittal types required by this Section with requirements of dewatering, support of excavation, rock removal, and geotechnical instrumentation submittals specified in other Sections.

B. Slope Stability Evaluation: Submit a temporary excavation slope stability evaluation in accordance with OSHA for temporary slopes over 20 feet in height or where existing or proposed facilities or property limits are located at the top of the slope and within a distance from the top of the slope equal to the slope height.

1. Prepare evaluation by a licensed Professional Engineer registered in the State of Texas.

C. Site Characterization Data: Submit following information regarding off-site source and material:

1. Site location.
2. Present and past usage of the source site and material.
3. Previously existing reports associated with an assessment of source site relating to presence of oil or other hazardous materials.
4. Location within the site from which the material will be obtained.

D. Samples: Submit a representative sample weighing approximately 50 pounds of each fill material, filter sand, and crushed stone contained in sealed 5 gallon containers, at least 30 calendar days prior to date of anticipated use of each material.

E. Submit laboratory test results for fill materials that include maximum density, gradation, Atterberg limits, sand equivalent, and other applicable criteria, at least 72 hours prior to importing or placing fill.

F. Prepare excavation support system designs by a licensed Professional Engineer, registered in State in which the work is located and having a minimum of 5 years of professional experience in design and construction of excavation support systems.

1. Submit an original and three copies of licensed Professional Engineer's certification, on PE form specified in Section 01 33 00 “Submittal Procedures,” stating excavation support systems designs have been prepared by Professional Engineer who is responsible for their execution.

1.5 INFORMATIONAL SUBMITTALS

A. Construction and Operations Plan: Submit proposed methods of construction, including earthwork operations, excavation limits, slopes, fill material moisture conditioning and handling, compaction equipment, excavation support systems designs, backfilling and filling and compaction, and material sources.

1. Include additional submittal requirements related to schedule, work sequence, and on-site and off-site storage when necessary, based on project conditions, including geophysical investigation work.
2. Submit excavation support system plan as prepared by registered Professional Engineer complying with requirements stated in previous Article.

B. Submit copies of field daily reports by soil technician at the end of each workday that earthwork and grading operations occur.

C. Upon completion of earthwork and grading operations, submit an as-graded map showing density test numbers and locations, a table of density test results and depths, and a certification of compliance by geotechnical engineer in charge.

D. Qualification Data: For qualified testing agency to conduct geotechnical observation, testing and documentation. include qualifications of firm, resumes of soil technicians assigned to the project, and licensed geotechnical engineer in charge.

1. Firm Qualifications: Meet ASTM D3740.
2. Soil Technicians: Have minimum three years demonstrated experience in earthwork and grading operations and satisfy certification requirements of agency having local jurisdiction.

   a. The Engineer reserves right to request substitution of soil technicians assigned to field work. Do not substitute assigned soil technicians without prior approval of the Engineer.

E. Pre-excavation Photographs or Videotape: Show existing conditions of adjoining construction and site improvements, including finish surfaces that might be misconstrued as damage caused by earthwork operations. Submit before earthwork begins.

1.6 QUALITY ASSURANCE

A. Excavation, trenching, sheeting, bracing, and similar work shall comply with requirements of OSHA excavation safety standards, 29 CFR Part 1926 Subpart P and State and local authorities having jurisdiction. Where conflict between OSHA, State and local regulations exists, apply most stringent requirements.

B. At least three working days prior to starting any excavation, notify the appropriate regional notification center for underground utilities and underground utility owners who are not members of notification center. To obtain area specific information for project site, refer to www.texas811.com.

C. Quality Control Testing for Off-site Borrow Materials:

1. Chemical testing will not be required where site characterization of off-site borrow sources indicates that soils are acceptable for use. If site characterization data or materials are suspected of being contaminated, perform chemical testing as directed by The Engineer with no additional compensation.
2. Chemical Test Data: Test each material source requiring testing by a person experienced in sample collection who is a registered Professional Engineer or geologist, or certified groundwater or environmental professional registered in the State of Texas. Submit samples of each proposed material to a chemical analytical laboratory, certified by the governing agency, for following analyses:

    a. Volatile Organic Compounds: EPA 8240 plus Hazardous Substance List (HSL) Parameters.
    b. Acid and Base Neutral Extractable Organic Compounds: EPA 8270.
    c. Pesticides and PCBs: EPA 8080.
    d. Total Petroleum Hydrocarbons: Infrared Method, EPA 9071/418.1.
    e. Thirteen Priority Pollutant Metals: EPA 7000 Series.
    f. Total Cyanide: EPA 9012.

3. Obtain and test off-site borrow samples in accordance with criteria established by the Engineer. Submit results for review and approval prior to use on site.

1.7 FIELD CONDITIONS

A. Be responsible for construction layout and reference staking necessary for proper control and satisfactory completion of structures, cutting, filling, grading, drainage, fencing, embankment improvements, curbing, and other appurtenances.

B. Perform construction layout and staking by a Professional Surveyor or Professional Engineer registered in State of Texas, experienced and skilled in construction layout and staking requirements.

C. Traffic: Minimize interference with adjoining roads, streets, walks, and other adjacent occupied or used facilities during earthwork operations.

    1. Do not close or obstruct streets, walks, or other adjacent occupied or used facilities without permission from Owner and authorities having jurisdiction.
    2. Provide alternate routes around closed or obstructed traffic ways if required by Owner or authorities having jurisdiction.

D. Utility Locator Service: Notify utility locator service "One Call" for area where Project is located before beginning earthwork operations.

E. Do not commence earthwork operations until temporary site fencing and erosion- and sedimentation-control measures specified in Section G6 "Sedimentation and Temporary Erosion Control" and Section G3 "Site Clearing" are in place.

F. Do not commence earthwork operations until plant-protection measures specified in Section 015639 "Temporary Tree and Plant Protection" are in place.

G. The following practices are prohibited within protection zones:

1. Storage of construction materials, debris, or excavated material.
2. Parking vehicles or equipment.
3. Foot traffic.
4. Erection of sheds or structures.
5. Impoundment of water.
6. Excavation or other digging unless otherwise indicated.
7. Attachment of signs to or wrapping materials around trees or plants unless otherwise indicated.

H. Do not direct vehicle or equipment exhaust towards protection zones.

I. Prohibit heat sources, flames, ignition sources, and smoking within or near protection zones.

PART 2 - PRODUCTS

2.1 SOIL MATERIALS

A. Fill materials designated for use in this Section are specified in Section G5 "Granular Fill Materials" and Section 31 05 15 "Soils and Aggregates for Earthwork."

B. On-Site Fill Material: Earth and rock material obtained at project site during excavation, following clearing and stripping, from which any Unsuitable Soil or Objectionable Material has been removed.

C. General: Provide imported fill materials when sufficient satisfactory soil materials are not available from excavations.

D. Provide fill or bedding material as noted on the Drawings or as referenced in the Contract Documents.

E. Lean concrete fill used for a working mat, seal slab or to replace over excavated material: Cast-in-Place concrete meeting requirement of Section 033000, with the concrete compressive strength equal to a minimum of 3,500 psi.

PART 3 - EXECUTION

3.1 PREPARATION

A. Protect structures, tanks, utilities, sidewalks, pavements, fencing, landscaping, and other facilities from damage caused by settlement, lateral movement, undermining, washout, and other hazards created by earthwork operations.

1. If necessary, remove and restore or replace curbing, driveway aprons, and fencing after performing backfilling work.
2. Replace existing facilities damaged by construction with new material fully equal to existing without additional compensation.

B. Prior to and During Earthwork Operations:

1. Protect and maintain erosion and sedimentation controls; coordinate with Section G6 "Sedimentation and Temporary Erosion Control."
2. Provide, monitor, and maintain excavation support; coordinate with Section 315000 "Excavation Support and Protection."

    a. Use excavation support system for excavations within the zone of influence for existing structures or utilities.
    b. Do not permit excavations below base level of adjacent foundations or retaining walls, unless excavation design and bracing includes an analysis of structure's stability supported by the foundation. When necessary due to project conditions, incorporate required bracing and foundation underpinning.

3. Provide, monitor, and maintain dewatering and drainage systems; coordinate with Section 312319 "Dewatering."

C. Test Pits:

1. Perform exploratory excavation work, test pits, for purpose of verifying the location of underground utilities and structures and to check for unknown utilities and structures, prior to commencing excavation work.
2. Backfill and compact test pits as soon as desired information has been obtained. Stabilize backfilled surfaces in accordance with approved erosion and sedimentation control plans.

D. Clearing and Stripping. Initially clear and strip ground surfaces beneath planned structures and in areas requiring excavation or filling of organic material and debris. Do not use those materials as On-Site Fill Material; remove from the site and properly disposed or reuse as topsoil in landscape areas.

E. Protect subgrades and foundation soils from freezing temperatures and frost. Remove temporary protection before placing subsequent materials.

F. Saw cut existing pavement with a saw, wheel, or pneumatic chisel along straight lines before excavating.

3.2 DEWATERING AND DRAINAGE

A. Provide dewatering and drainage in accordance with Section 31 23 19 "Dewatering". This Article supplements those requirements.

B. Prevent surface water and ground water from entering excavations, from ponding on prepared subgrades, and from flooding Project site and surrounding area.

C. Protect subgrades from softening, undermining, washout, and damage by rain or water accumulation.

1. Reroute surface water runoff and groundwater seepage away from excavated areas. Do not allow water to accumulate in excavations. Do not use excavated trenches as temporary drainage ditches.

D. Prior to excavation, verify groundwater will be at required level indicated on approved dewatering and drainage submittal.

E. Accomplish dewatering by methods that preserve undisturbed state of subgrade soils. Dewater in a manner to prevent boiling, detrimental under-seepage, or disturbance at excavation base.

3.3 SUPPORT OF EXCAVATION

A. Provide excavation support as required by federal, state, or local laws, ordinances, regulations, and safety requirements and in accordance with Section 31 50 00 "Excavation Support." This Article supplements those requirements.

B. Install excavation support in accordance with reviewed Shop Drawings prior to beginning excavation work.

C. Construct temporary excavation slopes in accordance with the requirements of OSHA excavation safety standards and approved Shop Drawings.

D. Where allowed, carefully remove excavation supports in a manner without endangering the Work or other adjacent structures, utilities, or property. Immediately fill voids left or caused by withdrawal of supports with sand and compact.

3.4 EXCAVATION

A. Include material of every description and of whatever substance encountered as an unclassified excavation.

B. General: Excavate on-site soils using standard earthmoving equipment. Excavation in dense soil or rock may require special equipment. Do not plough, scrape, or dig earth with machinery so near to finished subgrade to result in excavation of or disturbance of below grade material.

C. Seal slabs or working mats are specifically required in areas indicated on the Drawings. In areas not specifically indicated, seal slabs may be used at the Contractor's option.

D. Make excavations to grades indicated on Drawings and in widths sufficient for laying of pipe, construction of the structure, installing bracing, excavation supports, dewatering and drainage facilities, and working clearances.

E. Perform excavation in-the-dry and accomplished by methods which preserve the natural undisturbed condition of subgrade soils.

F. Moisture Sensitive Soils: Use a smooth-edge bucket to excavate last one foot of depth when excavation is to end in such soils.

G. If excavation bottom is removed below the limits shown on Drawings, specified, or directed by the Engineer, refill with structural fill, lean concrete or other material satisfactory to the Engineer without additional compensation.

H. When excavation has reached prescribed depths, notify the Engineer who will observe the conditions. If materials and conditions are not satisfactory, the Engineer will issue instructions

for corrective procedures. The Engineer will be the sole judge as to whether the work has been accomplished satisfactorily.

I. Subgrade soils that have become soft, loose, quick, or otherwise unsatisfactory due to inadequate excavation, dewatering, or other construction methods in the opinion of the Engineer, remove existing soil and replaced with structural fill or other material as acceptable to the Engineer at Contractor's expense.

J. Exposed subgrades for foundations shall be proof rolled with at least two overlapping coverages of a vibratory drum roller with a minimum static drum weight of 20 ton. Conduct proof-rolling in presence of the Engineer or the Engineer's designated representative. The Engineer will waive this requirement, if in its opinion the subgrade will be rendered unsuitable by such proof-rolling.

1. Confined Areas: Proof-roll with hand operated vibratory equipment that is approved by the Engineer.

K. Perform overexcavation at the Engineer's request to remove unsuitable soil, objectionable material, or other materials as determined by the Engineer and to such depth and width as directed. Replace with suitable material as directed by the Engineer.

1. Authorized additional excavation and replacement material will be paid for according to Contract provisions for changes in the Work.

L. Perform excavation for pipelines beneath structures and excavation for footings with excavating equipment operating from the subgrade for the structure, while in-the-dry and in a manner preserving the undisturbed state of subgrade soils.

M. When excavations have reached the required subgrade, including any allowances for working mats or base materials and prior to their placement, notify soils testing laboratory to verify suitability of existing subgrade soils for anticipated foundation and structural loadings.

1. If existing subgrade soils are determined to be unsuitable, follow direction provided by the Engineer regarding removal and replacement with suitable materials.
2. Notify the Engineer if the revised work scope would modify Contractor's cost and thereby entitle a change to the Contract Sum. Authorized additional excavation and replacement material will be paid for according to Contract provisions for changes in the Work.

N. Replace overexcavation beyond the limits and depths required by Contract Documents using structural fill, lean concrete or other material satisfactory to the Engineer without additional compensation.

O. Trenches in Tree- and Plant-Protection Zones:

1. Hand-excavate to indicated lines, cross sections, elevations, and subgrades. Use narrow-tine spading forks to comb soil and expose roots. Do not break, tear, or chop exposed roots. Do not use mechanical equipment that rips, tears, or pulls roots.
2. Do not cut main lateral roots or taproots; cut only smaller roots that interfere with installation of utilities.

3. Cut and protect roots according to requirements in Section 015639 "Temporary Tree and Plant Protection."

3.5 SUBGRADE PREPARATION

A. Notify Engineer or the Engineer's designated representative when excavations have reached required subgrade.

B. Maintain excavated subgrade in-the-dry condition.

C. Prior to fill placement, remove objectionable material which includes, but not be limited to, pavement, topsoil, organic matter, contaminated soil, construction debris, perishable materials, snow, ice, frozen earth, and rocks or lumps of cemented soils over 6 inches in maximum dimension.

D. For subgrades consisting of granular soils, proof roll the final subgrade using at least four coverages of a vibrator plate compactor.

E. If subgrade slopes more than 10 percent, step subgrade to produce a stable, horizontal surface for placement of fill materials. Scarify existing subgrade slope to a depth of at least 6 inches. Adjust the moisture content of the scarified zone to or slightly above optimum, and compact the subgrade as specified.

F. Where existing subgrade contains a significant amount of clay or cohesive soils, over-excavate sufficiently below the bottom of structure for placement of a lean concrete working mat. Remove loose or soft material from the subgrade immediately prior to placing lean concrete working mat (seal slab).

G. Remove and replace soft subgrades or unusable material with structural fill, lean concrete or other material satisfactory to the Engineer.

H. During wet or freezing weather, or in areas where exposed subgrade consists of moisture-sensitive soils, take measures to protect foundation excavations once they have been approved by the Engineer. Protective measures include, but are not limited to, placing insulation blankets, placing a layer of fill, pea gravel, crushed rock, or lean concrete on the exposed subgrade, or covering the exposed subgrade with a plastic tent.

   1. If additional overexcavation is required due to the subgrade not being protected against wet or freezing weather, perform additional work without additional compensation.

I. Notify the Engineer to observe conditions following subgrade preparation and prior to fill placement. If existing subgrade soils are determined to be unsuitable, follow direction provided by the Engineer regarding removal and replacement with suitable materials.

   1. Authorized additional excavation and replacement material will be paid for according to Contract provisions for changes in the Work.

3.6 STORAGE OF SOIL MATERIALS

A. Stockpile borrow soil materials and excavated satisfactory soil materials without intermixing. Place, grade, and shape stockpiles to drain surface water. Cover to prevent windblown dust. Protect from precipitation.

1. Stockpile soil materials away from edge of excavations. Do not store within drip line of remaining trees.

3.7 FILL PLACEMENT AND COMPACTION PROCEDURES

A. Fill and Backfill: Place materials in lifts to suit specified compaction requirements to required lines and grades, making allowances for settlement and placement of cover materials, such as topsoil or sod. Correct soft spots or uncompacted areas.

B. Do not place or compact fill and backfill when materials are too wet to properly compact.

1. In-place Soil Moisture Content: Maximum of three percentage points above optimum moisture content of soil, as determined by laboratory test of moisture-density relation appropriate to specified level of compaction.

C. Structural Fill and Embankment Fill: Construct to required lines and grades, making allowances for settlement and placement of cover materials, such as topsoil and sod. Correct soft spots or uncompacted areas.

D. Fill material shall be free of snow, ice, frost, and frozen earth. Do not place fill materials on frozen surfaces or surfaces covered by snow, ice, or frost.

E. Complete structure water-tightness tests and installation of dampproofing or waterproofing systems prior to placing various types of fill or backfill around structures.

F. Do not backfill against walls or grade beams until the structures bracing them at the top and bottom have been installed and, in the case of cast-in-place concrete, have achieved their 28-day compressive strength. Place fill so that its depth is increased uniformly and gradually around the perimeter of any structure.

G. Compact filled slopes by slope rolling and trimming or overfill and trim back to plan grade to expose a firm, smooth surface free of loose material.

H. Do not allow fill lifts to contain stones with a dimension larger than 2/3 the specified loose measure lift thickness.

I. Stones or rock fragments larger than 4-inches in their greatest dimensions will not be permitted within the finished grade of fills and embankments.

J. Perform compaction in open areas using compaction equipment by any of the following methods:

1. Fully loaded ten-wheel trucks or front-end loaders.
2. Tractor dozers weighing minimum of 30,000 pounds.
3. Heavy vibratory rollers.

K. Confined Compaction: Perform compaction in confined areas, including areas within a 45-degree angle extending upward and outward from the base of a wall, and in areas where the use of large equipment is impractical, using hand-operated vibratory equipment or mechanical tampers. Do not allow heavy roller compaction equipment closer than 6-foot from the wall of any structure.

1. Do not exceed lift thickness of 6 inches, measured before compaction, when using hand operated equipment.

L. Moisture condition on-site fill material prior to placement, unless Contractor demonstrates to the Engineer in-place moisture conditioning methods can achieve the required moisture content.

M. Conduct compaction of each specified lift of fill materials by a minimum of four complete coverages with acceptable compaction equipment to a specified density as a percentage of maximum dry density as determined by ASTM D698, unless otherwise specified. Backfill compaction by means of "puddling" is not allowed.

N. Use select structural fill required beneath foundations or slabs on grade, except sidewalks, unless shown or otherwise specified. Place and compact structural fill in even lifts having a maximum thickness of 8 inches, measured before compaction.

O. Use select fill material placed within 10 feet of all structures, unless shown or otherwise specified. Uniformly place and compact select fill around the structure in even lifts having a maximum thickness of 8 inches, measured before compaction.

P. Use common fill in areas beyond those designated for select structural fill or select fill, unless shown or otherwise specified. Place in even lifts having a maximum thickness of 8 inches, measured before compaction.

Q. Place impervious fill in controlled, even lifts having a maximum thickness (measured before compaction) of 6 inches.

1. Permeability: Compact to attain a reading of less than 1×10^{-7} cm/sec.
2. Moisture Content: Compact to minus 2 percent to plus 3 percent of optimum moisture content.

3.8 COMPACTION REQUIREMENTS

A. Perform in-place testing of compacted fill lifts to measure in-place density and water content according to ASTM D6938, ASTM D698, TEX-113-E.

B. Beneath Foundations and Slabs-on-Grade, except sidewalks: Compact top 12 inches of existing subgrade and each layer of fill, if applicable to:

1. Maximum Dry Density: For fills less than or equal to 5 feet in depth, minimum of 98 percent for ASTM D698. For fills greater than 5 feet in depth, minimum of 100 percent for ASTM D698.
2. Moisture Content: At or near its optimum moisture content, minus 2 percent to plus 3 percent.

C. Area Around Structures (within 10 feet): compact each fill or backfill layer to:

1. Maximum Dry Density: Minimum of 95 percent for ASTM D698.
2. Moisture Content: At or near its optimum moisture content, minus 2 percent to plus 3 percent.

D. Embankments, Lawn, or Unimproved Areas: Does not include embankments under roadways. Compact each fill or backfill layer to:

1. Maximum Dry Density: Minimum of 95 percent for ASTM D698.
2. Moisture Content:

a. For soils with plasticity index less than or equal to 25: At or near its optimum moisture content, minus 3 percent to plus 3 percent.
b. For soils with plasticity index greater than 25: At its optimum moisture content to plus 4 percent.

E. Sidewalks: Compact each fill layer to:

1. Maximum Dry Density: Minimum of 95 percent for ASTM D698.
2. Moisture Content: At or near its optimum moisture content, minus 2 percent to plus 3 percent.

F. Roads, Paved Areas, and Roadway Embankments: Compact each layer of fill or backfill to:

1. Maximum Dry Density: Minimum of 98 percent for TEX-113-E.
2. Moisture Content: At or near its optimum moisture content, minus 2 percent to plus 3 percent.

3.9 DISPOSAL OF UNSUITABLE, WASTE, AND SURPLUS EXCAVATED MATERIALS

A. Unsuitable soil, objectionable material, waste, and surplus excavated material shall be removed and disposed of off-site. Materials may be temporarily stockpiled in an area within the limits of construction that does not disrupt construction activities, create any nuisances or safety hazards, or otherwise restricts access to work site.

B. Topsoil or loam excavated under this Section may be salvaged for use as specified under Section G7 “Loaming, Hydroseeding and Permanent Erosion Control”, as approved by the Engineer.

3.10 GRADING

A. Perform grading to lines and grades shown on Drawings. Remove objectionable materials encountered within the limits indicated and disposed of off-site. Completely and continuously drained and dewatered subgrades throughout the grading process. Install temporary drains and drainage ditches to intercept or divert surface water that may affect the execution or condition of grading work.

B. If it is not possible at the time of grading to place material in its proper section of the Work, stockpile it in approved areas for later use. No additional compensation will be made for stockpiling or double handling of excavated materials.

C. Stones or rock fragments larger than 4-inches in their greatest dimensions will not be permitted within the top 6-inches of the finished grade of fills and embankments.

D. In cut areas, remove loose or protruding rocks in slopes to line or finished grade of the slope. Uniformly dress, cut, and fill slopes to slope cross-section and alignment shown on Drawings, unless otherwise directed by the Engineer.

3.11 RIPRAP AND SLOPE STABILIZATION

A. Prior to installation of riprap, install erosion control blankets on slopes in accordance with manufacturer's instructions.

1. Properly prepare area to be covered before the blanket is applied.
2. When the blanket is unrolled, place netting on top with fibers in contact with the soil over the entire area.
3. Butt blankets snugly at ends and sides, placing blankets a minimum of three rows, each four-foot wide, for a total width of 12 feet.
4. Staple blankets together in accordance with manufacturer's instructions.
5. Secure blankets by driving staple vertically into the ground, spaced approximately 6 feet apart, on each side and one row in the center, alternately spaced between each side.
6. Do not overlap adjoining blankets. Utilize a common row of staples to attach to ground.

B. Place riprap in conjunction with embankment construction with only sufficient lag in construction of riprap protection necessary to allow for proper construction of the portion of embankment protected and to prevent mixture of embankment and riprap material.

1. Place and grade bank run gravel to a depth of 6 inches to obtain a continuous uninterrupted bed of required thickness within the required limits.
2. Compact by a minimum one coverage by a crawler-type tractor with a total weight, including blade and equipment, of not less than 30,000 pounds.

C. Hand-place riprap on compacted gravel bed; do not dump materials. Lay stones so maximum dimension is perpendicular to the bed. Place stones so weight of each stone is carried by underlying material and not by adjacent stones. Place large stones at the bottom of slope. Fill spaces between stones with spalls of suitable size to construct a solid, stable slope, free from large voids and defects, and to protect embankments against erosion.

3.12 FIELD QUALITY CONTROL

A. Test and observe materials as described in this Article. Cooperate by allowing free access to work for selection of test materials and observations.

B. General Testing Requirements:

1. At Structures: Prior to placement of bedding material, concrete work mats, structural fill or structural concrete, coordinate with the Owner's representative to verify suitability of existing subgrade soil.
2. Backfill and Fill: Prior to and during the placement of backfill and fill coordinate with the Owner's representative to perform in-place soil density tests to verify that backfill and fill material has been placed and compacted in accordance with specified compaction requirements.

    a. Provide minimum 48 hours' notice prior to placement of backfill and fill.

3. Subgrade: Do not cover with fill without observation, testing, and approval by the Owner's representative.

    a. Earthwork activities performed without properly scheduled inspection are subject to removal and replacement or additional testing as directed by the Engineer without additional compensation.

C. Test materials as described in CIP7.

D. If field test results are not in conformance with project requirements, costs involved in correcting deficiencies in compacted materials to satisfaction of the Engineer without additional compensation.

E. Earthwork activities performed without properly scheduled inspection are subject to removal and replacement or additional testing as directed by the Engineer without additional compensation.

F. Testing methods shall comply with latest ASTM or equivalent AASHTO Standards applicable during bidding.

G. During placement of bedding, backfill, and fill, perform in-place soil density testing to confirm that fill material has been compacted in accordance with project requirements. The Engineer or Owner's representative may designate areas to be tested. Notify the Engineer and Owner's representative at least 72 hours in advance of scheduled compaction testing. In place soil density tests on backfill and fill material shall be as required by authorities having jurisdiction, project geotechnical report, but in no instance, shall less than those listed:

1. Structures, Pavements and Embankments: At least one density and moisture content test for each 5,000 square feet of surface area for each lift of fill at embankment, structure, pavement, and manhole locations.
2. Trench Excavations: At least one nuclear density and one moisture content test at a maximum of 100 feet intervals for each lift of fill placed or as directed by the Engineer.
3. The Engineer may designate supplemental areas to be tested at additional compensation.

H. Materials which have been previously tested may be subjected to further testing from time to time and may be rejected, if it is determined that results do not conform to project requirements. Immediately remove rejected materials when directed by the Engineer, notwithstanding results of previous testing.

I. The Engineer or Owner may conduct additional soil testing. Cooperate fully in allowing additional test to be made, including free access to the work.

3.13 PROTECTION

A. Protecting Graded Areas: Protect newly graded areas from traffic, freezing, and erosion. Keep free of trash and debris.

B. Repair and reestablish grades to specified tolerances where completed or partially completed surfaces become eroded, rutted, settled, or where they lose compaction due to subsequent construction operations or weather conditions.

1. Scarify or remove and replace soil material to depth as directed by the Engineer; reshape and recompact.

C. Where settling occurs before Project correction period elapses, remove finished surfacing, backfill with additional soil material, compact, and reconstruct surfacing.

1. Restore appearance, quality, and condition of finished surfacing to match adjacent work, and eliminate evidence of restoration to greatest extent possible.

END OF SECTION 312000

THIS PAGE INTENTIONALLY LEFT BLANK.

©2024 CDM Smith
All Rights Reserved

SECTION 312316 - ROCK REMOVAL

PART 1 - GENERAL

1.1 RELATED DOCUMENTS

A. Drawings and general provisions of the Contract, including General and Supplementary Conditions and Division 01 Specification Sections, apply to this Section.

1.2 SUMMARY

A. Section Includes:

1. Excavating, removing, and disposing of identified and discovered rock and boulders during excavation.
2. Tools to assist rock removal.
3. Backfill in place of the excavated rock.

B. Related Requirements:

1. Section 310515 “Soils and Aggregates for Earthwork” soil and aggregate materials.
2. Section 312000 “Earthwork” for excavation, backfilling, and compacting in open areas.
3. Section G4 “Pipe Excavation, Trenching, Embedment, Encasement and Backfilling” for trenching and backfilling for utilities.
4. Section G6 “Sedimentation and Temporary Erosion Control.”
5. Section 315000 “Excavation Support and Protection” temporary support of excavations.

1.3 ACTION SUBMITTALS

A. Submit means and methods description at least two weeks prior to commencing rock and boulder excavation.

1. Identify techniques including size and energy of impact equipment and chemical properties of agents to be used for chemical splitting.
2. Name and qualifications of persons responsible for monitoring and reporting rock excavation vibrations.

B. Review by the Engineer of Contractor’s submittals does not relieve Contractor of responsibility for accuracy, adequacy, and safety of rock and boulder excavation, exercising proper supervision and field judgment, and producing results specified in this Section.

PART 2 - PRODUCTS (NOT USED)

PART 3 - EXECUTION

3.1 PREPARATION

A. Identify required lines, levels, contours, and datum.

3.2 ROCK REMOVAL

A. Perform rock excavation by drilling, wedging, sledging, cutting, barring, jack hammering, hoe ramming, expansive chemical splitting, or other similar process in a manner, which does not cause damage to existing structures, new construction, or affecting Owner operations. No separate payment will be made for rock removal.

B. Price and payment for rock removal shall be included in all excavation-related bid items (e.g. lift stations, excavation, pipe, manholes, etc.) and no separate payment will be made for rock removal.

C. Blasting will not be permitted.

D. Perform rock excavation operations to comply with project, state, and local noise and dust regulations.

E. When below grade excavation methods shatter rock and is unfit for subgrade, as determined by the Engineer, Owner's representative or independent testing agency, remove rock and refill excavation with lean concrete without additional compensation.

F. When directed by the Engineer during the work, remove dirt and loose rock from designated areas and thoroughly clean rock surface; use steam to melt snow and ice, if necessary. Remove water in depressions so the whole surface of designated area can be inspected to determine whether seams or other defects exist.

G. Leave surfaces of rock foundations sufficiently rough to bond well with concrete. When required, cut rock to rough benches or steps.

H. Before installing masonry or embankment on or against rock, free rock surfaces from vegetation, dirt, sand, clay, boulders, scale, excessively cracked rock, loose fragments, ice, snow, and other objectionable substances. Use picking, barring, wedging, streams of water under sufficient pressure, stiff brushes, hammers, steam jets, and other effective means to accomplish this cleaning. Remove free water left on rock surface.

3.3 DISPOSAL OF ROCK AND BOULDERS

A. Fragmented rock with dimensions not exceeding 4 inches in any direction may be mixed with common fill and used as common fill in accordance with Section G5 "Granular Fill Materials" and Section 310515 "Soils and Aggregates for Earthwork."

B. Crushed and screened rock and boulders may be for reused in the work, provided resultant materials meet requirements for gravel, crushed stone, or select structural fill as specified in Section G5 "Granular Fill Materials" and Section 310515 "Soils and Aggregates for Earthwork.

C. Stockpile excavated material without excessive surcharge on excavation or obstructing free access to hydrants and gate valves. Avoid inconvenience to traffic and abutters as much as possible.

D. Should conditions make it impracticable or unsafe to stack material adjacent to excavations, haul and store material at provided location. When required, re-handle and use it for trench backfilling without additional compensation.

E. Replace rock and boulder material disposed of by wasting using available surplus suitable soils. Where there is a deficiency of surplus backfill material, provide common fill without additional compensation.

F. Remove and dispose off-site unused rock and boulders.

END OF SECTION 312316

This page intentionally left blank.

©2024 CDM Smith
All Rights Reserved

SECTION 312319 - DEWATERING

PART 1 - GENERAL

1.1 RELATED DOCUMENTS

A. Drawings and general provisions of the Contract, including General and Supplementary Conditions and Division 01 Specification Sections, apply to this Section.

1.2 SUMMARY

A. Section includes temporary construction dewatering and surface water control and incorporates the design, equipment, materials, installation, operation, protection, monitoring and removal of dewatering and drainage system. Provide dewatering system sufficient to lower groundwater and collect surface water, regardless of groundwater level or rainfall at any time during the work.

B. Obtain and pay for permits required for dewatering and drainage systems. Implement measurements to comply with dewatering and discharge permits requirements.

C. Related Requirements:

1. Section 310515 “Soils and Aggregates for Earthwork” for soil and aggregate materials.
2. Section 312000 "Earthwork" for excavating and backfilling in open areas.
3. Section 312316 “Rock Removal” for removal of rock and boulders.
4. Section G4 “Pipe Excavation, Trenching, Embedment, Encasement and Backfilling” for trenching, backfilling, and compaction.
5. Section G6 “Sedimentation and Temporary Erosion Control” for controlling surface-water runoff and ponding.
6. Section 315000 “Excavation Support and Protection” for temporary support of excavations.

1.3 DEFINITIONS

A. In-the-Dry: An excavation subgrade where all of the following are met:

1. Groundwater level has been lowered to at least 2 feet below lowest excavation level (or to top of rock).
2. Subgrade is stable with no ponded water, mud, or muck.
3. Subgrade is able to support construction equipment without rutting or disturbance.
4. Subgrade is suitable for placement and compaction of fill material, pipe, or concrete foundations.

B. Contractor’s Engineered Design: Design prepared on behalf of Contractor by a registered Professional Engineer.

C. Professional Engineer: Professional Engineer registered in State of Texas, meeting project qualifications, and who is hired by Contractor.

D. The Engineer: Engineer hired by Owner.

1. Approvals given by The Engineer shall not relieve Contractor of its responsibilities for performing the work in accordance with Contract Document requirements.

1.4 ACTION SUBMITTALS

A. Design Plan: Submit written dewatering and drainage system design plan, prepared by a qualified Professional Engineer, that includes:

1. Description of proposed dewatering system and installation methods to be used for system elements and observation wells.
2. Description of equipment, drilling methods, holes sizes, filter sand placement techniques, sealing materials, development techniques, number and location of dewatering points and observations wells.
3. Dewatering system design calculations demonstrating that the proposed system meets all requirements herein and elsewhere.
4. Sequence of well and well-point placement coordinated with support of excavation system installation and control procedures to be adopted, if dewatering problems arise.
5. Identification of anticipated area influenced by dewatering system and address impacts to adjacent existing and proposed structures.
6. Coordinate dewatering and drainage submittals with excavation and support of excavation submittals.

B. Shop Drawings: For dewatering system, prepared by a qualified Professional Engineer.

1. Include plans, elevations, sections, and details.
2. Show arrangement, locations, and details of wells and well points; locations of risers, headers, filters, pumps, power units, and discharge lines; and means of discharge, control of sediment, and disposal of water.
3. Include pump capacity and anticipated discharge rate.
4. Include layouts of piezometers and flow-measuring devices for monitoring performance of dewatering system.
5. Show areas and depths of excavation to be dewatered and adjacent structures or facilities within the anticipated area influence.

1.5 INFORMATIONAL SUBMITTALS

A. Qualification Data: For Installer and Professional Engineer.

B. Field quality-control reports.

C. Existing Conditions: Using photographs or video recordings, show existing conditions of adjacent construction and site improvements that might be misconstrued as damage caused by dewatering operations. Submit before Work begins.

D. Record Drawings: Identify locations and depths of capped wells and well points and other abandoned-in-place dewatering equipment.

1.6 QUALITY ASSURANCE

A. Installer Qualifications: An experienced installer that has specialized in installation of dewatering systems and dewatering work and having a minimum of 5 years' experience.

B. Professional Engineer Qualifications: Licensed Professional Engineer registered in the State of Texas; having a minimum of 5 years' experience in design and construction of dewatering and drainage systems; and having completed not less than 5 successful dewatering and drainage projects of equal type, size, and complexity to that required for the work.

C. Land Surveyor Qualifications: Land Surveyor licensed in State of Texas.

D. Comply with authorities having jurisdiction for the following:

1. Drilling and abandoning of well-points used for dewatering systems.
2. Water discharge and disposal from dewatering operations.

E. Obtain required permits for storm water discharge from construction sites.

1.7 FIELD CONDITIONS

A. Project-Site Information: Geotechnical data has been prepared for this Project and is available for information only. Owner is not responsible for interpretations or conclusions drawn from this data.

1. Make additional test borings and conduct other exploratory operations necessary for dewatering according to the performance requirements.
2. Groundwater levels may vary during the work and should not be assumed to be accurately represented by groundwater level readings reported in the geotechnical data.
3. The geotechnical data is included elsewhere in Project Manual.

B. Survey Work: Engage a qualified land surveyor or Professional Engineer to survey adjacent existing buildings, structures, and site improvements; establish exact elevations at fixed points to act as benchmarks. Clearly identify benchmarks and record existing elevations.

PART 2 - PRODUCTS

2.1 DESIGN REQUIREMENTS

A. Dewatering Performance: Design, furnish, install, test, operate, monitor, and maintain dewatering system of sufficient scope, size, and capacity to control hydrostatic pressures and to lower, control, remove, and dispose of surface and ground water and permit excavation and construction to proceed in-the-dry in accordance with the requirements herein and elsewhere.

1. Design dewatering system, including comprehensive engineering analysis by the Contractor's Design Engineer.
2. Continuously monitor and maintain dewatering operations to ensure required groundwater lowering, erosion control, stability of excavations, excavation support, and constructed slopes, prevention of flooding in excavation, and prevention of damage to subgrades and permanent structures.
3. Prevent surface water from entering excavations by grading, dikes, or other means.
4. Accomplish dewatering without damaging existing buildings, structures, and site improvements adjacent to excavation.
5. Remove dewatering system when no longer required for construction.

B. Primary Purpose of Work: Preserve natural undisturbed condition of subgrade soils in areas of proposed excavations.

1. Prior to excavation, lower groundwater to at least 2 feet below lowest excavation subgrade elevation.
2. Additional groundwater lowering may be necessary beyond 2 feet requirement, depending on construction methods, equipment used, and prevailing groundwater and soil conditions. Lower groundwater as necessary to complete construction in accordance with Contract Documents without additional compensation.

C. Design well points and sumps, and other groundwater control system components to prevent loss of fines from surrounding soils. Use sand filters with dewatering installations, unless screens are properly sized by Contractor's design engineer to prevent passage of fines from surrounding soils.

D. Maintain standby pumping systems and sources of standby power at various sites.

E. Design dewatering system to prevent damage to adjacent properties, buildings, structures, utilities, and facilities from dewatering operations. Be responsible for damage to properties, buildings or structures, sewers and other utility installations, pavements, and work that may result from dewatering or surface water control operations.

F. Regulatory Requirements: Comply with governing regulations before beginning dewatering. Comply with water- and debris-disposal regulations of authorities having jurisdiction.

2.2 MATERIALS

A. Equipment: Piping, pumping, and other equipment and materials to provide control of surface water and groundwater in excavations.

B. Grout: Mixture of portland cement and bentonite clay or sand suitable for sealing abandoned well-points and piping.

PART 3 - EXECUTION

3.1 GENERAL

A. Control surface water and groundwater such that:

1. Excavation to final grade is made in-the-dry.
2. Natural undisturbed conditions of subgrade soils are maintained.
3. Softening, instability, or disturbance due to presence or seepage of water does not occur.
4. Construction and backfilling proceeds in-the-dry.
5. Floatation of completed portions of work shall be prohibited.

B. Methods of groundwater control may include but are not limited to perimeter trenches and sump pumping, perimeter groundwater cutoff, well points, ejectors, or any combination.

C. Where groundwater levels are above proposed bottom of excavation level, provide a pumped dewatering system for pre-drainage of soils prior to excavation and for maintaining lowered groundwater level until construction has been completed such that structure, pipeline, or fill will not be floated or otherwise damaged.

D. Vary type of system, spacing of dewatering units, and other details of the work depending on soil and water conditions at each location.

E. Do work in a manner to protect adjacent structures and utilities without causing loss of ground or disturbance to pipe bearing soils or soils supporting overlying or adjacent structures.

F. Install, monitor, and report data from observation wells. Evaluate collected data relative to groundwater control system performance and modify systems necessary to dewater site.

G. Locate groundwater control system components where they will not interfere with construction activities adjacent to the work area or interfere with installation and monitoring of geotechnical instrumentation including observation wells. Do not make excavations for sumps or drainage ditches within or below 1H:1V slopes extending downward and out from edges of existing or proposed foundation elements or from downward vertical footprint of pipe without approval by the Engineer.

3.2 PREPARATION

A. Protect structures, utilities, sidewalks, pavements, and other facilities from damage caused by settlement, lateral movement, undermining, washout, and other hazards created by dewatering operations.

1. Prevent surface water and groundwater from entering excavations, from ponding on prepared subgrades, and from flooding site or surrounding area.
2. Protect subgrades and foundation soils from softening and damage by rain or water accumulation.

B. Install dewatering system to ensure minimum interference with roads, streets, walks, and other adjacent occupied and used facilities.

1. Do not close or obstruct streets, walks, or other adjacent occupied or used facilities without permission from Owner and authorities having jurisdiction. Provide alternate routes around closed or obstructed traffic ways, if required by authorities having jurisdiction.

C. Provide temporary grading to facilitate dewatering and control of surface water.

D. Protect and maintain temporary erosion and sedimentation controls, which are specified in Section G7 "Sedimentation and Temporary Erosion Control" during dewatering operations.

3.3 INSTALLATION

A. Install dewatering system utilizing wells, well points, or similar methods complete with pump equipment, standby power and pumps, filter material gradation, valves, appurtenances, water disposal, and surface-water controls.

1. Space well points or wells at intervals required to provide sufficient dewatering.
2. Use filters or other means to prevent pumping of fine sands or silts from the subsurface.

B. Place dewatering system into operation to lower water to specified levels before excavating below ground-water level.

C. Provide sumps, sedimentation tanks, and other flow-control devices as required by authorities having jurisdiction.

D. Provide standby equipment on-site, installed, and available for immediate operation, to maintain dewatering on continuous basis if any part of system becomes inadequate or fails.

3.4 SURFACE WATER CONTROL

A. Construct surface water control measures, including dikes, ditches, sumps, and other methods to prevent flow of surface water into excavations and to allow construction to proceed without delay.

B. Grade excavation to divert surface water and seepage water within excavation areas into sumps and dewatering well-points.

3.5 EXCAVATION DEWATERING

A. Provide and maintain equipment and facilities to promptly remove and properly dispose of water entering excavations. Maintain excavations in-the-dry.

B. Excavation dewatering shall maintain the subgrade in a natural undisturbed condition and be in operation until the fill, structure, or pipes to be built thereon have been completed to such extent that they will not be floated or otherwise damaged by allowing water levels to return to natural elevations.

C. Do not place pipe, masonry, and concrete in water or submerge within 24 hours after being installed. Prevent water from flow over new masonry or concrete within four days after placement.

D. Prevent water from rising to cause unbalanced pressure on structures until concrete or mortar has set at least 24 hours. Prevent pipe flotation by promptly placing backfill.

E. Conduct dewatering to preserve natural undisturbed condition of subgrade soils at bottom of excavation.

F. If trench subgrade or excavation bottom becomes disturbed due to inadequate dewatering or drainage, excavate below normal grade as directed by the Engineer and refill with structural fill, screened gravel, or other material as approved by the Engineer without additional compensation.

G. It is expected that initial dewatering plan may be modified to suit variable soil and water conditions encountered. Dewater and excavate in a manner without causing loss of ground or disturbance to pipe bearing soil or soil that supports overlying or adjacent structures.

H. If methods do not properly dewater excavation, install additional groundwater observation wells as directed by the Engineer. Do not place pipe or structure until readings obtained from observation wells indicate that groundwater has been lowered to specified minimum of below bottom of final excavation.

I. Surround dewatering units with suitable filter sand with no fines being removed by pumping. Pump continuously from dewatering system until pipe or structure is adequately backfilled. Provide stand-by pumps.

J. Collect water entering excavations from precipitation or surface runoff in shallow ditches around excavation perimeter, drained to a sump, and pump from excavation to maintain a bottom free from standing water.

K. Dispose of drainage to an approved area. Do not use existing or new sanitary sewers to dispose of drainage.

3.6 WELL-POINT SYSTEMS

A. Where necessary, install a vacuum well-point system around excavation for dewatering purposes. Surround each well-point and riser pipe by a sand filter. Use sand of gradation that after initial development of well-points, quantity and size of soil particles discharged shall be negligible. Provide well-point systems capable of operating continuously under highest possible vacuum. Include sufficient valves and gauges to accurately monitor and control the system. Develop and redevelop well-points to provide reliable performance throughout the duration of the work.

B. Install well point systems in the Engineer’s presence according with approved submittal.

3.7 OBSERVATION WELLS

A. Install observation wells in accordance with the approved submittal to monitor groundwater levels beneath and around excavated areas until adjacent structures and pipelines are completed and backfilled.

B. Observation well locations and depths to be sufficient to confirm operation of groundwater control system designed under Delegated Design is performing as intended. Locations and depths are subject to approval by Engineer.

C. Protect observation wells at ground surface by providing a lockable box or outer protective casing with lockable top and padlock. Design surface protection to prevent damage by vandalism, construction operations, and surface water infiltration.

1. Provide two copies of padlock keys at each well for the Engineer's access.
2. Develop observation wells to provide a reliable indication of groundwater levels. Re-developed wells: if well clogging is observed; in event of apparent erroneous readings; or as directed by the Engineer.
3. Submittal observation well installation logs, top of casing elevation, and well locations to the Engineer within 24 hours of completing well installation.

D. Observation Well Maintenance:

1. Maintain each observation well until adjacent structures and pipelines are completed and backfilled. Clean out or replace any observation well which ceases to be operable before adjacent work is completed.
2. Repair or replace wells without additional compensation, whether damage is caused by Contractor's operations or third parties.

E. Monitoring and Reporting of Observation Well Data:

1. Begin monitoring of groundwater levels in work areas prior to initial operation of drainage and dewatering system. Continue monitoring in areas where groundwater control is in operation until time that adjacent structures and pipelines are completed and backfilled or until time that groundwater control systems are turned off.
2. Be responsible for processing and reporting observation well data to the Engineer on a regular (minimum monthly) basis. Provide data to the Engineer on a form that includes following information: observation well number, depth to groundwater, total depth of well, top of casing elevation, groundwater level elevation, and date and time of reading.

F. Keep groundwater level at a minimum of 2 feet below lowest subgrade level for a given excavation, or to top-of-rock where applicable.

3.8 REMOVAL OF SYSTEMS

A. At completion of excavation and backfilling work and when approved by the Engineer, remove from site various pipe, well-points, pumps, generators, observation wells, other equipment, and accessories used for groundwater and surface water control systems.

1. Removed materials and equipment become property of Contractor.

B. Restore areas disturbed by installation and removal of groundwater control systems and observation wells to their original condition.

C. Leave in place well-points and observation wells located:

1. Within plan limits of structures or pipelines.
2. Within zone below 1H:1V planes extending downward and out from edges of foundation elements or from downward vertical footprint of pipe.
3. Where removal would result in ground movements causing adverse settlement to adjacent ground surface, utilities, or existing structures.

D. Fill pulled casings holes with sand. Where left in place, fill casings with cement grout and cut off a minimum of 3 feet below finished ground level or 1 foot below foundation level to prevent interference with finished structures or pipelines.

E. When directed by the Engineer, leave observation wells in place for continued monitoring. Cut casings flush with final ground level when directed and provide protective lockable boxes with locking devices. Provide protective boxes suitable for traffic and other conditions to which observation wells will be exposed.

F. All required regulatory permits and notifications are to be made by the Contractor's licensed well driller upon removal/abandonment of wells.

END OF SECTION 312319

This page intentionally left blank.

©2024 CDM Smith
All Rights Reserved

SECTION 312323.33 - FLOWABLE FILL

PART 1 - GENERAL

1.1 RELATED DOCUMENTS

A. Drawings and general provisions of the Contract, including General and Supplementary Conditions and Division 01 Specification Sections, apply to this Section.

1.2 SUMMARY

A. Section Includes:

1. Flowable fill for:

   a. Structure backfill.
   b. Utility bedding.
   c. Utility backfill.
   d. Filling abandoned utilities.

B. Related Requirements:

1. Section G9 “Structural Excavation” for general building excavation.
2. Section G5 "Granular Fill Materials" for soil and aggregate backfill.
3. Section G7 "Loaming, Hydroseeding and Permanent Erosion Control" for filling of topsoil over backfilled trenches to finish grade elevation.
4. Section G4 "Pipe Excavation, Trenching, Embedment, Encasement and Backfilling" for piping and bedding.

1.3 DEFINITIONS

A. Utility: Any buried pipe, duct, conduit, manhole, tank, or cable.

B. Excavatable Flowable Fill: Lean cement concrete fill used where future excavation may be required, such as fill for utility trenches, bridge abutments, and culverts.

C. Non-excavatable Flowable Fill: Lean cement concrete fill used where future excavation is not anticipated, such as fill below structure foundations and filling abandoned utilities.

1.4 SUBMITTALS

A. Manufacturer's Certificate: Certify that products meet or exceed specified requirements.

B. Field Quality-Control Submittals:

1. Mix Design:

    a. Furnish flowable fill mix design for each specified strength.
    b. Furnish separate mix designs when admixtures are required for the following:

        1) Flowable fill Work during hot and cold weather.
        2) Air entrained flowable fill Work.

    c. Identify design mix ingredients, proportions, properties, admixtures, and tests.
    d. Sieve analysis of aggregate.

2. Furnish test results to certify flowable fill mix design properties meet or exceed specified requirements.

C. Delivery Tickets:

1. Furnish duplicate delivery tickets indicating actual materials delivered to Project Site.

D. Qualifications Statements:

1. Submit qualifications for supplier.

1.5 QUALITY ASSURANCE

A. Perform Work according to City of Georgetown standards.

B. Maintain a copy of each standard affecting the Work of this Section on Site.

C. All testing and inspection services required, unless otherwise specified, shall be provided and paid by Contractor. Testing necessary to establish the mix shall be performed by and at expense of Contractor. Methods of testing shall comply with the latest applicable ASTM Methods except as specified herein.

1.6 QUALIFICATIONS

A. Supplier:

1. Company specializing in supplying products specified in this Section with minimum three years' experience.
2. Product source approved by authority having jurisdiction.

1.7 ENVIRONMENTAL REQUIREMENTS

A. Store or stockpile fly ash, aggregate, and cement in conformity with the recommendations of ACI 301.

B. Minimum Conditions: Do not install flowable fill during inclement weather or when ambient temperature is less than 40 degrees F.

1.8 FIELD MEASUREMENTS

A. Verify field measurements before installing flowable fill to establish quantities required to complete the Work.

PART 2 - PRODUCTS

2.1 FLOWABLE FILL

A. Furnish materials according to City of Georgetown standards.

B. Flowable Fill: Excavatable type and non-excavatable type.

2.2 MATERIALS

A. Portland Cement: Type II - Moderate;

B. Fine Aggregates:

1. Inert natural sand.

a. Aggregate sizes not greater than 3/8-inch.
b. Satisfactory flowability, strength and setting time when used in comparable flowable fill mixes.
c. Non-expansive or reactive aggregates.

C. Water: Clean and not detrimental to concrete.

2.3 ADMIXTURES

A. Manufacturers:

1. Furnish materials according to City of Georgetown standards.

B. Admixtures manufactured specifically for use in flowable fills will be considered for approval.

1. Free of chlorides and alkalis (except for those attributable to water).
2. Compatible with the mix.
3. Suitable for use in contact with potable water after curing.
4. Admixtures causing retarded or accelerated setting of the mix require written approval from the Engineer.

C. Air Entrainment: ASTM C260.

D. Chemical Admixture: ASTM C494/C494M.

1. Type A: Water Reducing.

E. Fly Ash: ASTM C618 Class C or F obtained from residue of electric generating plant using ground or powdered coal.

F. Plasticizing: ASTM C1017/C1017M Type I, plasticizing.

2.4 MIXES

A. Mix and deliver flowable fill according to ASTM C94/C94M, Option C.

B. Flowable Fill Design Mix:

ITEM	EXCAVATABLE	NON-EXCAVATABLE
Cement Content	75 to 100 lb/cu yd	100 to 150 lb/cu yd
Fly Ash Content	None	150-600 pcf
Water Content	As specified	As specified
Air Entrainment	5 to 35 percent	5 to 15 percent
28-Day Compressive Strength	Maximum 100 psi.	Minimum 125 psi
Unit Mass (Wet)	80 to 110 pcf	100 to 125 pcf
Temperature, Minimum at Point of Delivery	50 degrees F	50 degrees F

C. Provide water content in design mix to produce self-leveling, flowable fill material at time of placement.

D. Design mix air entrainment and unit mass are for laboratory design mix and source quality control only.

2.5 SOURCE QUALITY CONTROL

A. Test and analyze properties of flowable fill design mix and certify results for the following:

1. Design mix proportions by weight of each material.
2. Aggregate: ASTM C33 for material properties and gradation.
3. Properties of plastic flowable fill design mix including:

   a. Temperature.
   b. Slump.
   c. Air entrainment.
   d. Wet unit mass.

e. Yield.
f. Cement factor.

4. Properties of hardened flowable fill design mix including:

a. Compressive strength at 1 day, 7 days, and 28 days. Report compressive strength of each specimen and average specimen compressive strength.
b. Unit mass for each specimen and average specimen unit mass at time of compressive strength testing.

B. Prepare delivery tickets containing the following information:

1. Project designation.
2. Date.
3. Time.
4. Class and quantity of flowable fill.
5. Actual batch proportions.
6. Free moisture content of aggregate.
7. Quantity of water withheld.

PART 3 - EXECUTION

3.1 EXAMINATION

A. Verify excavation and trenching is complete.

B. Verify utility installation is complete and tested before placing flowable fill.

C. Verify excavation is dry.

3.2 PREPARATION

A. Support and restrain utilities to prevent movement and flotation during installation of flowable fill.

B. Protect structures and utilities from damage caused by hydraulic pressure of flowable fill before fill hardens.

C. Protect utilities and foundation drains to prevent intrusion of flowable fill.

3.3 INSTALLATION - FILL, BEDDING, AND BACKFILL

A. Engineer approval required for the condition of subgrade and method of placement.

B. Remove all debris and foreign matter from the excavation before depositing flowable fill.

C. Do not place flowable fill in water or submerge within 24 hours after placing.

D. Do not place flowable fill through flowing water.

E. Place flowable fill by chute, pumping or other methods approved by Engineer.

F. Place flowable fill in lifts to prevent lateral pressures from exceeding structural capacity of structures and utilities.

G. Place flowable fill evenly on both sides of utilities to maintain alignment.

H. Place flowable fill to elevations indicated on Drawings without vibration or other means of compaction.

3.4 INSTALLATION - FILLING ABANDONED UTILITIES

A. Verify pipes and conduits are not clogged and are sufficiently empty to permit gravity installation of flowable fill for entire length indicated to be filled.

B. Seal lower end of pipes and conduits by method to contain flowable fill and to vent trapped air caused by filling operations.

C. Place flowable fill using method to ensure there are no voids.

1. Fill pipes and conduits from high end.
2. Fill manholes, tanks, and other structures from grade level access points.

D. After filling pipes and conduits seal both ends.

3.5 FIELD QUALITY CONTROL

A. Perform inspection and testing according to ASTM C94/C94M.

1. Take samples for tests for every 150 cu yd of flowable fill, or fraction thereof, installed each day.
2. Prepare sample and test four compressive strength test cylinders per ASTM D4832. Test one specimen at 3 days, one at 7 days, and two at 28 days.
3. Measure temperature at point of delivery when samples are prepared.

B. Perform in place penetration (density) tests using handheld penetrometer to measure penetration resistance of hardened flowable fill according to ASTM C403.

1. Perform tests at locations as directed by Engineer**.**

C. Defective Flowable Fill: Fill failing to meet the following test requirements or fill delivered without the following documentation.

1. Test Requirements:

a. Minimum temperature at point of delivery.
b. Compressive strength requirements for each type of fill.

2. Documentation: Duplicate delivery tickets.

3.6 CLEANING

A. Remove spilled and excess flowable fill from Project Site.

B. Restore facilities and Site areas damaged or contaminated by flowable fill installation to existing condition before installation.

END OF SECTION 31 23 23.33

©2024 CDM Smith
All Rights Reserved

This page intentionally left blank.

©2024 CDM Smith
All rights Reserved

SECTION 312500 - EROSION AND SEDIMENTATION CONTROLS

PART 1 - GENERAL

1.1 RELATED DOCUMENTS

A. Drawings and general provisions of the Contract, including General and Supplementary Conditions and Division 01 Specification Sections, apply to this Section.

1.2 SUMMARY

A. Section Includes:

1. Silt fences.
2. Erosion control blanket.
3. Mulch sock.

B. Related Sections:

1. Section 310515 “Soils and Aggregates for Earthwork.”
2. Section 311000 “Site Clearing.”

1.3 REFERENCE STANDARD

A. EPA document titled: “Stormwater Management for Construction Activities – Developing Pollution Prevention Plans and Best Management Practices” document number EPA 832-R-92-005, dated 1992, or most recent edition. TCEQ standards can be substituted for the EPA standard if the TCEQ standard is equal to, or more detailed than, the EPA standard.

1.4 ACTION SUBMITTALS

A. Submit, within 10 days after award of Contract, technical product literature for all commercial products.

B. Product Data: Product Data: Submit data on geotextile.

C. Manufacturer's Certificate: Certify Products meet or exceed specified requirements.

1.5 QUALITY ASSURANCE

A. Perform Work according to these specifications.

PART 2 - PRODUCTS

2.1 SILT FENCE

A. Silt fence filter fabric shall be a woven, polypropylene, ultraviolent resistant material as specified in Section 310519.13 “Geotextiles for Earthwork.”

B.

B. Posts: Standard T or U steel fence posts weighing not less than 1 pound / linear foot (1.48 kg / m). Steel posts shall be a minimum of 5 feet in length, 2-1/2-inch by 2-1/2-inch by 1/4-inch angle post with self-fastening tabs and a 5-inch by 4-inch (nominal) steel anchor plate at bottom.

C. Tie wires for securing silt fence fabric to wire mesh shall be light gauge metal clips (hog rings), or 1/32 inch diameter soft aluminum wire.

D. Wire fence shall be minimum 12 gage with maximum 4 inch mesh opening.

E. Engineer may approve prefabricated commercial silt fence as a substitute for built-in-field fence.

2.2 EROSION CONTROL BLANKET

A. Erosion Control Blankets: Curled wood excelsior fiber matrix, 0.73 lbs / sq. yd., stitch bonded with 100 percent biodegradable thread between two photodegradable polypropylene nettings.

1. Product: Provide Curlex Blanket as manufactured by American Excelsior Company, Arlington, TX, or approved equal.

B. Blanket: ASTM D6459.

C. Prior to start of work, provide a certified statement as to the number of pounds/sf of materials to be used per 100 gallons of water. Specify the number of square feet of seeding that can be covered with the quantity of solution in the Contractor's hydroseeder.

2.3 MULCH SOCK

A. Mulch Sock: Material shall be 100 percent biodegradable, photodegradable or recyclable material such as burlap, twine, plastic, polyester, or other acceptable material.

1. Effective Diameter: 12 inches plus or minus 1 inch.

B. Mulch Material: Untreated, organic material such as shredded bark, wood chips, stump grindings, composted bark, etc.

1. Utilize a three inch minus screening process (TxDOT Item 161, Compost, Section 1.6.2.B)
2. Free of silt, clay, fine sands, refuse, physical contaminants, and material toxic to plants.

C. Product: Provide Curlex Sediment Logs as manufactured by American Excelsior Company, Arlington, TX, or equal.

PART 3 - EXECUTION

3.1 EXAMINATION

A. Verification of existing conditions before starting work.

B. Verify gradients and elevations of base or foundation for other work are correct.

3.2 SILT FENCE

A. Position sediment fences as indicated on Drawings and to prevent off site movement of sediment produced by construction activities as directed by Engineer. Areas beyond limits of silt fence shall be undisturbed or stabilized.

B. Dig trench approximately 6 inch wide and 6 inch deep along proposed fence lines.

C. Drive stakes, 10 feet on center (maximum) at back edge of trenches. Drive stakes 1 foot(minimum) into ground.

D. Hang filter fabric on posts carrying to bottom of trench with about 4 inches of fabric laid across bottom of trench. Stretch fabric taut along fence length and maintain secure both ways.

E. Backfill trench with excavated material and tamp.

F. Install pre-fabricated silt fence according to manufacturer’s instructions.

3.3 EROSION CONTROL BLANKETS

A. Install erosion control blankets onto all exposed slopes to be loamed and seeded that are steeper than 4(Horizontal) to 1(Vertical) as shown on Drawings. Erosion control blankets shall also be installed in all seeded drainage swales and ditches, and as directed by Engineer in accordance with manufacturer's instructions.

B. The area to be covered shall be properly prepared, fertilized, and seeded with permanent vegetation before the blanket is applied. When the blanket is unrolled, the netting shall be on top and the fibers in contact with the soil over the entire area. The blankets shall be applied in the direction of water flow and stapled.

C. Place blankets and stapled together in accordance with manufacturer's instructions. Side overlaps shall be 4 inch minimum. The staples shall be made of wire, 0.091 inch in diameter or greater, "U" shaped with legs 10-inch in length and a 1-1/2-inch crown. Commercial biodegradable stakes may also be used with prior approval by Engineer. The staples shall be driven vertically into the ground, spaced approximately two linear feet apart, on each side, and one row in the center alternately spaced between each size. Upper and lower ends of the matting shall be buried to a depth of 4-inch in a trench. In swales and ditches, erosion stops

shall be created every 25-feet by making a fold in the fabric and carrying the fold into a silt trench across the full width of the blanket. The bottom of the fold shall be 4-inch below the ground surface. Staple on both sides of fold. Where the matting must be cut or more than one roll length is required in the swale, turn down upper end of downstream roll into a slit trench to a depth of 4-inch. Overlap lower end of upstream roll 4-inch past edge of downstream roll and staple.

D. To ensure full contact with soil surface, roll matting with a roller weighing 100 lbs/ft of width perpendicular to flow direction after seeding, placing matting, and stapling. Thoroughly inspect channel after completion. Correct any areas where matting does not present a smooth surface in full contact with the soil below.

3.4 MULCH SOCK

A. Position mulch sock as indicated on Drawings and as necessary to prevent off site movement of sediment produced by construction activities as directed by Engineer.

B. Drive wooden stakes, 4 feet on center (maximum) at back edge of sock. Drive stakes 1 foot (minimum) into ground.

C. Install prefabricated mulch sock according to manufacturer's instructions.

3.5 SITE STABILIZATION

A. Incorporate erosion control devices indicated on Drawings into the Project at the earliest practicable time.

B. Construct, stabilize and activate erosion controls before site disturbance within tributary areas of those controls.

C. Stockpile and waste pile heights shall not exceed 35 feet. Slope stockpile sides at 2:1 or flatter.

D. Stabilize any disturbed area of affected erosion control devices on which activity has ceased and which will remain exposed for more than 20 days.

1. During non-germinating periods, apply mulch at recommended rates.
2. Stabilize disturbed areas which are not at finished grade and which will be disturbed within one year.
3. Stabilize disturbed areas which are either at finished grade or will not be disturbed within one year.

E. Stabilize stockpiles immediately.

3.6 FIELD QUALITY CONTROL

A. Inspect erosion control devices on a weekly basis and after each runoff event. Make necessary repairs to ensure erosion and sediment controls are in good working order.

3.7 CLEANING

A. When sediment accumulation in sedimentation structures has reached a point one-third depth of sediment structure or device, remove and dispose of sediment.

B. Do not damage structure or device during cleaning operations.

C. Do not permit sediment to erode into construction or site areas or natural waterways.

END OF SECTION 312500

©2024 CDM Smith
All rights Reserved

THE PAGE INTENTIONALLY BLANK.

© 2024 CDM Smith
All Rights Reserved

SECTION 315000 - EXCAVATION SUPPORT AND PROTECTION

PART 1 - GENERAL

1.1 RELATED DOCUMENTS

A. Drawings and general provisions of the Contract, including General and Supplementary Conditions and Division 01 Specification Sections, apply to this Section.

1.2 SUMMARY

A. Section includes temporary excavation and trench support and protection systems.

B. Related Requirements:

1. City of Georgetown Standard Specifications.
2. Section 312000 "Earthwork" for excavating and backfilling.
3. Section G3 "Site Clearing" for site stripping, grubbing, stripping and stockpiling topsoil, and removal of above- and below-grade improvements and utilities.
4. Section 312316 “Rock Removal” for excavation of rock and boulders.
5. Section 312319 "Dewatering" for lowering and disposing of ground water during construction and dewatering excavations.

1.3 ACTION SUBMITTALS

A. Shop Drawings: For excavation support and protection system, prepared by or under the supervision of a qualified professional engineer, meeting the minimum performance requirements in PART 2 of this Section.

1. Include overall system plan, indicating clearances, dimensions, material properties, member sizes, locations, spacing and member penetrations depths, and locations of various types of lateral supports.
2. Show details, layout, arrangement, equipment requirements, and method of construction of proposed excavation support system.
3. Indicate existing and proposed utilities, structures, or other obstructions.
4. Show wall elevations and locations of bracing.
5. Show overall installation sequence and removal of bracing. Indicate work levels to be performed before bracing is installed or removed.
6. Method of preloading bracing, if required, including preload for each member, and method of locking-off the preload. Submit detailed drawings of connections, jacking supports, and method of shimming.
   Include procedures for resolving difficulties arising from misalignment of members exposed during excavation and criteria for implementing those procedures.

B. Design Calculations: For excavation support and protection system. Include analysis data prepared, signed, and sealed by professional engineer responsible for their preparation.

1. Include loads on excavation support system for all stages of excavation, bracing removal, and concrete placement, including material and equipment loads on adjacent ground during construction.
2. Include design of wall and bracing members including details for all construction stages.
3. Include theoretical deflections of excavation support system and deformation of structures, pipelines, and other improvements located within areas influencing excavations.

C. Submit to the Engineer for review and acceptance, a plan of action to be implemented in the event any deformation threshold value is reached as specified in Section 310900 "Geotechnical Instrumentation and Monitoring." Identify positive measures in action plan to further limit wall movement, including but not limited to trenching for struts and wales, placement of granular earth berms against the wall, installation of additional struts, or combinations thereof.

1. Include description and details of mitigating measures, work schedule, location and availability of materials, and structural details for connections to wall and support elements.
2. Be prepared to work 24 hours per day to implement such measures.
3. Perform remedial work and mitigating measures at no additional cost to Owner.

1.4 INFORMATIONAL SUBMITTALS

A. Submit quality control measures to ensure that performance of excavation support system complies with project requirements.

B. Submit welder qualifications and weld procedures in accordance with AWS D1.1.

C. Qualification Data: For land surveyor.

D. Maintain at least one copy of design at job site during excavation that includes a plan indicating sizes, types, and configurations of the materials to be used in protective system. Identity registered Contractor's design engineer who stamped the design.

E. Do not proceed with excavation support or protection activities until submittals have been reviewed by the Engineer.

1.5 QUALITY ASSURANCE

A. Contractor Qualifications: Minimum 5 years' experience compatible to indicated Work, and who employs labor and supervisory personnel similarly experienced in Work of this Section.

B. Contractor's Design Engineer: Registered Professional Engineer in State where the work is located with at least 5 years' professional experience in design and construction of support of excavation systems and having completed a minimum of 5 successful excavation support projects of equal type, size, and complexity to specified work.

C. Existing Conditions: Using photographs or video recordings, show existing conditions of adjacent construction and site improvements that might be misconstrued as damage caused by inadequate performance of excavation support and protection systems. Submit before Work begins.

D. Regulatory Requirements: Comply with authorities having jurisdiction, including OSHA requirements.

E. Record Drawings: Identify locations and depths of capped utilities, abandoned-in-place support and protection systems, and other subsurface structural, electrical, or mechanical conditions.

1.6 FIELD CONDITIONS

A. Interruption of Existing Utilities: Do not interrupt any utility serving facilities occupied by Owner or others unless permitted under the following conditions and then only after arranging to provide temporary utility according to requirements indicated:

1. Contact utility companies and other responsible authorities to locate and mark underground utilities.
2. Notify Owner no fewer than two days in advance of proposed interruption of utility.
3. Do not proceed with interruption of utility without Owner's written permission.

B. Project-Site Information: Geotechnical data has been collected for this Project and is available for information only. The opinions expressed in this report are those of a geotechnical engineer and represent soil borings and tests, conducted by a geotechnical engineer. Owner is not responsible for interpretations or conclusions drawn from the data.

1. Make additional test borings and conduct other exploratory operations necessary for excavation support and protection according to the performance requirements.
2. Geotechnical data is included elsewhere in Project Manual.

C. Survey Work: Engage a qualified land surveyor or professional engineer to survey adjacent existing buildings, structures, and site improvements; establish exact elevations at fixed points to act as benchmarks. Clearly identify benchmarks and record existing elevations.

PART 2 - PRODUCTS

2.1 PERFORMANCE REQUIREMENTS

A. Provide, design, monitor, and maintain excavation support and protection system capable of supporting excavation sidewalls and of resisting earth and hydrostatic pressures and superimposed and construction loads within specified movement criteria.

1. Contractor Design: Design excavation support and protection system, including comprehensive engineering analysis by a qualified professional engineer.
2. Prevent surface water from entering excavations by grading, dikes, or other means.
3. Install excavation support and protection systems to minimize horizontal and vertical movements without damaging existing buildings, structures, and site improvements adjacent to excavation.

B. Do not permit excavations below the level of the base of adjacent existing foundations or retaining walls, unless excavation design and bracing includes an analysis of stability of structure supported by foundation and if necessary, incorporates required bracing or underpinning of foundation.

C. For support systems in which bracing is installed between opposite sides of the excavation, design excavation support of both sides to be nearly the same as feasible.

D. Where necessary to resist point loads, fill pipe piles used as soldier piles with concrete. Do not consider concrete strength in design of pipe pile for bending stress.

E. Design, install, operate, and maintain ground water control system to control ground water inflows, prevent piping or loss of ground, and maintain stability of the excavation. Refer to the requirements of Section 312319 "Dewatering."

F. Design review and field monitoring activities by Owner or the Engineer does not relieve Contractor of its work responsibilities.

2.2 MATERIALS

A. General: Provide materials that are either new or in serviceable condition.

B. Provide all material and equipment as required to install, monitor, and maintain the excavation support system as designed by the Contractor's Professional Engineer.

PART 3 - EXECUTION

3.1 EXAMINATION

A. Verify that instrumentation required under Section 310900 "Geotechnical Instrumentation and Monitoring" is installed and initialized prior to start of work required by this Section.

B. Proceed with installation only after unsatisfactory conditions have been corrected.

3.2 PREPARATION

A. Obtain permits from local authority having jurisdiction prior to initiating excavation work.

B. Protect structures, utilities, sidewalks, pavements, and other facilities from damage caused by settlement, lateral movement, undermining, washout, and other hazards that could develop during excavation support and protection system operations.

1. Shore, support, and protect utilities encountered.

C. Install excavation support and protection systems to ensure minimum interference with roads, streets, walks, and other adjacent occupied and used facilities.

1. Do not close or obstruct streets, walks, or other adjacent occupied or used facilities without permission from Owner and authorities having jurisdiction. Provide alternate routes around closed or obstructed traffic ways if required by authorities having jurisdiction.
2. Install fencing, gates, lights, and signs around excavations and staging areas to provide for public safety.

D. Locate excavation support and protection systems clear of permanent construction so that construction and finishing of other work is not impeded.

3.3 GENERAL

A. Install excavation support systems in accordance with the shop drawings and applicable permits.

B. Fill voids between excavation support system and earth with materials acceptable to the Engineer.

C. If unstable material is encountered during excavation, take immediately measures to contain it in place and prevent ground displacement.

D. If settlement or deflections of supports indicate that support system requires modification to prevent excessive movements, redesign and resubmit revised shop drawings and calculations to the Engineer without additional compensation.

E. Maintain sufficient quantity of material on site for protection of work and for use in case of accident or emergency.

3.4 PORTABLE TRENCH BOXES

A. Use portable trench boxes or sliding trench shields only for worker protection.

B. Do not use trench boxes as tunnel launch and exit shafts unless specifically approved by Contractor’s Professional Engineer. Additional excavation, backfilling, and surface restoration required as result of trench box use shall be provided without additional compensation.

C. Design, construct, and maintain trench boxes or shields to meet acceptable engineering and industry standards.

D. Install shields in a manner to restrict lateral or other hazardous movement of the shield in the event of sudden lateral loads.

E. Maintain a written copy of trench box manufacturer's specifications, recommendations, and limitations at job site during excavation work.

3.5 SOLDIER PILES AND LAGGING

A. Install steel soldier piles before starting excavation.

1. Install using impact hammer or vibratory hammer in predrilled holes.
2. Soldier Piles in Predrilled Holes:

    1. Provide casing or other methods of support to prevent caving of holes and loss of ground.
    2. Backfill with concrete from elevation of bottom excavation to pile tip elevation. Backfill remainder of predrilled hole with lean concrete or sand.
    3. Predrilled hole of sufficient diameter allowing for proper alignment and concrete backfilling of pile.

3. Install driven piles with driving shoes where hard driving is anticipated.
4. Advance driven soldier piles without aid of a water jet.

B. Extend soldier piles below excavation grade level to depths shown on reviewed Shop Drawings. Space soldier piles at regular intervals not to exceed allowable flexural strength of wood lagging. Accurately align exposed faces of flanges to vary not more than 2 inches from a horizontal line and not more than 1:120 out of vertical alignment.

C. Install wood lagging within flanges of soldier piles as excavation proceeds. Trim excavation as required to install lagging.

1. Install lagging so ground loss does not occur between adjacent or below lowest board. As excavation proceeds, do not maximum height of 4 feet for unlagged face of excavation.
2. Do not exceed unlagged face of 2 feet, if water seeps or flows from excavation face or excavation face becomes unstable.

D. Fill voids behind lagging with soil, and compact.

E. Install wales at locations indicated on Drawings and secure to soldier piles.

3.6 STEEL SHEET PILING

A. Thoroughly cleaned and inspect sheet piles for defects and proper interlock dimensions prior to installation. Provide a tool for checking interlock dimensions.

B. Before starting excavation, drive one-piece sheet piling lengths in plumb position and tightly interlock vertical edges for its entire length to form a continuous barrier. Form a continuous diaphragm throughout length of each run of wall, bearing tightly against original ground.

1. Exercise care in driving so interlocking members can be extracted without damaging adjacent structures or utilities.
2. Use driving, cutting, and splicing methods conforming to approved Shop Drawings.
3. Use templates or other temporary alignment facilities to maintain piling line.

C. Accurately place piling, using templates and guide frames unless otherwise recommended in writing by sheet piling manufacturer. Limit vertical offset of adjacent sheet piling to 5 feet . Accurately align exposed faces of sheet piling to vary not more than 2 inches from a horizontal line and not more than 1:120 out of vertical alignment.

D. Install each sheet pile having sufficient clearance in interlocks to slide under its own weight into interlock of previously placed sheet pile.

E. Do not excavate in advance of steel sheet piling installation.

F. Where obstructions are anticipated, pre-excavate or pre-drill along sheet pile wall alignment without additional compensation. Do not extend pre-excavation and pre-drilling below lowest excavation level or into bearing soils for existing or future structures.

G. Remove obstructions encountered before the specified embedment for piles. Where obstructions cannot be removed, re-evaluate sheet pile system by Contractor's design Professional Engineer to show reduced embedment and additional toe stability measures to be implemented for sheet pile wall realignment. Submit proposed design measures to the Engineer for review.

H. Withdraw damaged or faulty aligned pilings with provide new piling, driven properly in its place without additional compensation.

I. Cut tops of sheet piling to uniform elevation at top of excavation.

3.7 LINER PLATES

A. Install liner plates as soon as excavation has progressed sufficiently to install next complete circumferential ring of liner plates. Complete ring of liner plates prior to continuing excavation.

1. Do not install more than one ring of liner plates at any time.

B. Stagger plates in vertical direction to facilitate shaft strength and leakage resistance.

C. Grout liner plates in accordance with approved Shop Drawings.

3.8 INTERNAL BRACING

A. Bracing: Locate bracing to clear columns, floor framing construction, and other permanent work. If necessary to move brace, install new bracing before removing original brace.

1. Do not place bracing where it will be cast into or included in permanent concrete work, unless otherwise approved by the Engineer.
2. Install internal bracing if required to prevent spreading or distortion of braced frames.
3. Maintain bracing until structural elements are supported by other bracing or until permanent construction is able to withstand lateral earth and hydrostatic pressures.

B. Provide internal bracing to carry maximum design load without distortion or buckling.

C. Include web stiffeners, plates, or angles required to prevent rotation, crippling, or buckling of connections and points of bearing between structural steel members. Allow for eccentricities caused by field fabrication and assembly.

D. Install and maintain bracing support members in tight contact with each other and with the surface being supported.

E. Coordinate excavation work with installation of bracing. Extend excavation no more than 2 feet below any brace level prior to installation of the bracing.

F. Use procedures that produce uniform loading of bracing member without eccentricities, overstressing, or distortion of system members.

3.9 FIELD QUALITY CONTROL

A. Survey-Work Benchmarks: Resurvey benchmarks regularly during installation of excavation support and protection systems, excavation progress, and for as long as excavation remains open. Maintain an accurate log of surveyed elevations and positions for comparison with original elevations and positions. Promptly notify Engineer if changes in elevations or positions occur or if cracks, sags, or other damage is evident in adjacent construction.

B. Promptly correct detected bulges, breakage, or other evidence of movement to ensure that excavation support and protection system remains stable.

C. Promptly repair damages to adjacent facilities caused by installation or faulty performance of excavation support and protection systems.

3.10 REMOVAL

A. Remove excavation support and protection systems when construction has progressed sufficiently to support excavation and earth and hydrostatic pressures. Remove in stages to avoid disturbing underlying soils and rock or damaging structures, pavements, facilities, and utilities.

1. Fill voids immediately with approved backfill compacted to density specified in Section 312000 "Earthwork."
2. Repair or replace, as approved by Engineer, adjacent work damaged or displaced by removing excavation support and protection systems.

B. Do not remove vertical support members that were installed within zone of influence of new or existing structures. Cut off support members installed within this zone at 5 feet below finished grade and abandon in place.

C. Do not remove internal bracing or transfer loads to permanent structure without prior acceptance of the Engineer.

D. Begin removal at excavation bottom and progress upward. Slowly release members noting indication of possible failure of remaining members or possible cave-in of excavation sides.

E. Progress backfilling together with removal of support systems from excavations.

F. Remove all portions of excavation support, unless otherwise indicated by approved Shop Drawings.

1. Zone of Influence Definition: Zone extending down and away from outer edge of the structure at 1 horizontal to 1 vertical.

G. Do not leave wood as part of abandoned portion of the work.

H. When removing excavation support system, do not disturb or damage adjacent buildings, structures, waterproofing material, or utilities. Fill voids immediately with lean concrete or well-graded cohesionless sand or as directed by the Engineer.

I. Immediately remove excavation support system material from site.

END OF SECTION 315000

© 2023 CDM Smith
All Rights Reserved

SECTION 321313 - CONCRETE PAVING

PART 1 - GENERAL

1.1 RELATED DOCUMENTS

A. Drawings and general provisions of the Contract, including General and Supplementary Conditions and Division 01 Specification Sections, apply to this Section.

1.2 SUMMARY

A. Section Includes:

1. Aggregate base course.
2. Concrete paving: Constructing Portland cement concrete pavement, plain or reinforced in accordance with these specifications and with the lines, grades and dimensions shown on the plans. Specifically, the work includes:

    a. Designing the concrete mix.
    b. Preparation of subgrade and subbase material.
    c. Installation of steel reinforcement, dowel bars and tie bars.
    d. Furnishing, transporting, placing, consolidating, finishing, and texturing of concrete.
    e. Furnishing concrete admixtures and additives.
    f. Constructing all joints and furnishing joint materials.
    g. Marking the pavement.
    h. Curing the pavement and furnishing all curing materials.

3. Quality Control of Concrete paving includes:

    a. Furnishing concrete necessary for making test beams and/or cylinders.
    b. Performing maturity testing.
    c. Coring and patching the pavement.
    d. Calibrating and checking the operation of batching equipment.
    e. Taking actions necessary to prevent or to repair cracking.
    f. Sawing and sealing joints.
    g. Verifying dowel bar alignment.
    h. Removing and replacing, or repair of defective pavement.

B. Related Requirements:

1. Section C2 “Concrete for Structures” for general building applications of concrete.
2. Section 321373 “Concrete Paving Joint Sealants” for joint sealants in expansion and contraction joints within concrete paving and in joints between concrete paving and asphalt paving or adjacent construction.
3. Section SD5 “Striping” for pavement markings.

1.3 PRE-INSTALLATION MEETINGS

A. Pre-installation Meeting: Conduct meeting at Project site.

1. Review methods and procedures related to concrete paving, including but not limited to, the following:

   a. Concrete mixture design.
   b. Quality control of concrete materials and concrete paving construction practices.

2. Require representatives of each entity directly concerned with concrete paving to attend, including the following:

   a. Contractor's superintendent.
   b. Independent testing agency responsible for concrete design mixtures.
   c. Ready-mix concrete manufacturer.
   d. Concrete paving Subcontractor.
   e. Manufacturer's representative of stamped concrete paving system used for stamped detectable warnings.

1.4 ACTION SUBMITTALS

A. Submit detailed information on materials proposed and installation methods.

B. Product Data: Submit data on material and equipment to be used in concrete pavement including:

1. Sources of aggregate, manufacturer data sheets for cement and concrete admixtures used in the concrete mix design.
2. Dowels and dowel bar assemblies.
3. Reinforcement or welded wire mesh.
4. Equipment to be used for placement, consolidation finishing, texturing, and curing of concrete pavement.
5. Material and equipment to be used for joint installation including joint fillers, joint sealants, and saw-cutting and joint cleaning equipment.

C. Proposed Techniques: submit proposed techniques for placement, consolidation, finishing texturing and curing of concrete, and methods of concrete joint installation.

D. Pavement jointing plan showing joint types based on the proposed methods of installation.

E. Samples for Initial Selection: For each type of product, ingredient, or admixture requiring color selection.

F. Samples for Verification: For each type of product or exposed finish, prepared as Samples of size indicated below:

1. Exposed Aggregate: 10 lb. Sample of each mix.

G. Concrete Mix Design Data:

1. Submit concrete mix design for each concrete strength.
2. Identify mix ingredients and proportions, including admixtures.
3. Identify chloride content of admixtures and whether or not chloride was added during manufacture.

H. Source Quality Control Submittals: Indicate results of factory tests and inspections.

1.5 PRECONSTRUCTION TESTING

A. Construct a test section consisting of minimum three panels in length by one panel width, including or as approved by the Engineer. Include paving, joints, surface texture, exposed aggregate, and specified slope in test section.

B. Locate the test section as directed or approved by the engineer**.** The test section will be part of the actual pavement area.

C. Incorporate accepted test section as part of Work.

1.6 FIELD CONDITIONS

A. Do not place concrete when base surface temperature is less than 40 degrees F, or surface is wet or frozen.

B. Do not begin placement of concrete unless the ambient temperature is at least 35 degrees F and rising.

PART 2 - PRODUCTS

2.1 MATERIALS

A. Concrete Mix Design Requirements: Design concrete mix in accordance with 325.14R-17 (Guide for Design and Proportioning of Concrete Mixtures for Pavements).

B. Form Materials: Plywood, metal, metal-framed plywood, or other approved panel-type materials to provide full-depth, continuous, straight, and smooth exposed surfaces.

1. Use flexible or uniformly curved forms for curves with a radius of 100 feet or less.

C. Form-Release Agent: Commercially formulated form-release agent that will not bond with, stain, or adversely affect concrete surfaces and that will not impair subsequent treatments of concrete surfaces.

D. Steel Reinforcement:

1. Plain-Steel Welded-Wire Reinforcement: ASTM A1064/A1064M, fabricated from as-drawn steel wire into flat sheets.
2. Deformed-Steel Welded-Wire Reinforcement: ASTM A1064/A1064M, flat sheet.
3. Epoxy-Coated Welded-Wire Reinforcement: ASTM A884/A884M, Class A, plain steel.

4. Reinforcing Bars: ASTM A615/A615M, Grade 60; deformed.
5. Galvanized Reinforcing Bars: ASTM A767/A767M, Class II zinc coated, hot-dip galvanized after fabrication and bending; with ASTM A615/A615M, Grade 60 deformed bars.
6. Steel Bar Mats: ASTM A184/A184M; with ASTM A615/A615M, Grade 60 deformed bars; assembled with clips.
7. Plain-Steel Wire: ASTM A1064/A1064M, as drawn.
8. Deformed-Steel Wire: ASTM A1064/A1064M.
9. ..
10. Dowel Bars: ASTM A615/A615M, Grade 60 plain-steel bars. Cut bars true to length with ends square and free of burrs.
11. Tie Bars: ASTM A615/A615M, Grade 60; deformed.
12. Hook Bolts: ASTM A307, Grade A, internally and externally threaded. Design hook-bolt joint assembly to hold coupling against paving form and in position during concreting operations, and to permit removal without damage to concrete or hook bolt.
13. Bar Supports: Bolsters, chairs, spacers, and other devices for spacing, supporting, and fastening reinforcing bars, welded-wire reinforcement, and dowels in place. Manufacture bar supports according to CRSI's "Manual of Standard Practice" from steel wire, plastic, or precast concrete of greater compressive strength than concrete specified, and as follows:
14. Equip wire bar supports with sand plates or horizontal runners where base material will not support chair legs.
15. For epoxy-coated reinforcement, use epoxy-coated or other dielectric-polymer-coated wire bar supports.
16. Epoxy Repair Coating: Liquid, two-part, epoxy repair coating, compatible with epoxy coating on reinforcement.
17. Zinc Repair Material: ASTM A780/A780M.

2.2 CONCRETE MATERIALS

A. Cementitious Materials: Provide cementitious materials consisting of portland cement, blended, cement or only portland cement in combination with supplementary cementitious materials (SCM), that conform to appropriate specifications listed below. Use cementitious materials, of same type, brand, and source throughout Project.

1. Portland Cement: ASTM C150/C150M, gray portland cement Type I.
2. Blended Hydraulic Cement: Provide blended cement conforms to ASTM C595/C595M, Type IP or IS. Type IP blend shall only include ASTM C618 Class F or Class N pozzolan. Include in written statement from the manufacturer that the amount of pozzolan in the finished cement does not vary more than plus or minus 5 mass percent of the finished cement throughout production for the project.
3. Supplementary Cementitious Materials (SCMs):

   a. Fly Ash: ASTM C618, Class F.
   b. Raw or Calcined Natural Pozzolan: ASTM C618, Class N.
   c. Slag Cement: ASTM C989/C989M, Grade 120.

B. Aggregates:

1. Normal-Weight Aggregates: ASTM C33/C33M, Class 4M, uniformly graded. Provide aggregates from a single source.
2. Maximum Coarse-Aggregate Size: 3/4 inch nominal.
3. Fine Aggregate: Free of materials with deleterious reactivity to alkali in cement.

C. Admixtures:

1. Air-Entraining Admixture: ASTM C260/C260M.
2. Chemical Admixtures: Admixtures certified by manufacturer to be compatible with other admixtures and to contain not more than 0.1 percent water-soluble chloride ions by mass of cementitious material.
3. Water-Reducing Admixture: ASTM C494/C494M, Type A.
4. Retarding Admixture: ASTM C494/C494M, Type B.
5. Water-Reducing and Retarding Admixture: ASTM C494/C494M, Type D.
6. High-Range, Water-Reducing Admixture: ASTM C494/C494M, Type F.
7. High-Range, Water-Reducing and Retarding Admixture: ASTM C494/C494M, Type G.
8. Plasticizing and Retarding Admixture: ASTM C1017/C1017M, Type II.

2.3 CURING MATERIALS

A. Water Curing:

1. Absorptive Cover: AASHTO M 182, Class 3, burlap cloth made from jute or kenaf, weighing approximately 9 oz./sq. yd. dry or cotton mats.
2. Moisture-Retaining Cover: ASTM C171, polyethylene film or white burlap-polyethylene sheet.
3. Water: Potable.

B. Evaporation Retarder: Waterborne, monomolecular, film forming, manufactured for application to fresh concrete.

1. Manufacturers: Subject to compliance with requirements, provide products by one of the following or equal:

a. BASF Corporation-Construction Systems.
b. Bon Tool Co.
c. Brickform; a division of Solomon Colors.
d. ChemMasters, Inc.
e. Dayton Superior.
f. Euclid Chemical Company (The); an RPM company.
g. Kaufman Products, Inc.
h. L&M Construction Chemicals, Inc.
i. Lambert Corporation.
j. Metalcrete Industries.
k. Nox-Crete Products Group.
l. Sika Corporation.
m. SpecChem, LLC.
n. TK Products.
o. Vexcon Chemicals Inc.
p. W.R. Meadows, Inc.

C. Joint Fillers: ASTM D1751, asphalt-saturated cellulosic fiber or ASTM D1752, cork or self-expanding cork in preformed strips.

D. Slip-Resistive Aggregate Finish: Factory-graded, packaged, rustproof, non-glazing, abrasive aggregate of fused aluminum-oxide granules or crushed emery aggregate containing not less than 50 percent aluminum oxide and not less than 20 percent ferric oxide; unaffected by freezing, moisture, and cleaning materials.

E. Bonding Agent: ASTM C1059/C1059M, Type II, non-redispersible, acrylic emulsion or styrene butadiene.

F. Epoxy-Bonding Adhesive: ASTM C881/C881M, two-component epoxy resin capable of humid curing and bonding to damp surfaces; of class suitable for application temperature, of grade complying with requirements, and of the following types:

1. Types IV and V, load bearing, for bonding hardened or freshly mixed concrete to hardened concrete.

G. Chemical Surface Retarder: Water-soluble, liquid, set retarder with color dye, for horizontal concrete surface application, capable of temporarily delaying final hardening of concrete to a depth of 1/8 to 1/4 inch.

1. Manufacturers: Subject to compliance with requirements, provide products by one of the following or equal:

a. ChemMasters, Inc.
b. Dayton Superior.
c. Euclid Chemical Company (The); an RPM company.
d. Kaufman Products, Inc.
e. Nox-Crete Products Group.
f. QC Construction Products.
g. Scofield, L. M. Company.
h. Sika Corporation.
i. SpecChem, LLC.
j. TK Products.
k. Vexcon Chemicals Inc.
l. W.R. Meadows, Inc.

2.4 CONCRETE MIXTURES REQUIREMENTS

A. General:

1. Prepare design mixtures, proportioned according to ACI 325.14R-17, for each type and strength of normal-weight concrete, and as determined by either laboratory trial mixtures or field experience.
2. Use a qualified independent testing agency for preparing and reporting proposed concrete design mixtures for the trial batch method.
3. Design the mix to achieve a 28-day compressive strength of 3,500 psi.
4. Design the mix with 0.50 maximum W/C ratio at the point of placement.
5. Maximum slump at the point of placement: 4 inch.

6. Provide a concrete mix with minimum cementitious material (i.e., Portland cement plus supplemental cementitious material) content meeting the requirements of Table 5.4.5.1a of ACI 325.14R-17.

B. Aggregate:

1. Provide coarse and fine aggregate for concrete mix from sources approved by Texas DOT.
2. Provide coarse and fine aggregate consisting of clean, hard, durable particles meeting the requirements of ASTM C33/C33M.
3. Provide coarse aggregate with 1-1/2 inch nominal maximum aggregate size.
4. Coarse and fine aggregate shall consist of particles that are generally spherical or cubical in shape.
5. Coarse aggregates shall be clean and free of deleterious material as follows:

   a. Clay lumps and friable particles (ASTM C142/C142M) < 0.25 percent by mass.
   b. Material finer than 0.075 mm No. 200 sieve (ASTM C117): < 1.0 percent.
   c. Lightweight particles (ASTM C123/C123M): < 1.0 percent.
   d. Total of all deleterious substances, exclusive of material finer than 0.075 mm No. 00 sieve: < 5.0 percent.

6. Fine aggregates shall be clean and free of deleterious material as follows:

   a. Clay lumps and friable particles (ASTM C142/C142M) < 1.0 percent by mass.
   b. Material finer than 0.075 mm No. 200 sieve (ASTM C117): < 3.0 percent.
   c. Lightweight particles ASTM C123/C123M: < 0.5 percent.

7. Aggregate shall not have potential for alkali-silica reactivity (ASR) with cement as determined by ASTM C1778 or AASHTO PP65.
8. Provide coarse aggregate with no more than 40 percent loss when subjected to the Los Angeles abrasion test in accordance with ASTM C131/C131M.
9. Optimize combined coarse and fine aggregate grading in accordance with the guidelines of Section 5.4.10 of ACI 325.14R-17.

C. Portland Cement:

1. Provide ASTM C150/C150M Portland Cement Type I or II.

D. Supplementary Cementitious Materials (SCMs): Supplementary Cementitious Materials used in paving concrete shall conform to the following requirements:

1. Fly Ash: Conform to ASTM C618, Class F.
2. Natural Pozzolan: Raw or calcined conforming to ASTM C618, Class N.
3. Slag Cement: Ground-granulated blast-furnace slag conforming to ASTM C989/C989M, Grade 100 or Grade 120.
4. Limit percentage, by weight, of cementitious materials other than portland cement in concrete as follows:

   a. Fly Ash plus Natural Pozzolan: 35 percent.
   b. Slag Cement: 50 percent.

c. Combined Fly Ash and Slag Cement: 50 percent, with fly ash not exceeding 25 percent.
d. Combined Pozzolan and Slag Cement: 50 percent, with Pozzolan not exceeding 25 percent.

E. Concrete Admixtures:

1. General: Concrete chemical admixtures may include water reducers, retarders, accelerators, air-entrainers. When multiple admixtures in the same mixture, incompatibility issues should be avoided by using admixtures from the same manufacturer.
2. Air Entrainment Admixture (ASTM C260): Add air-entraining admixture to result in normal-weight concrete at point of placement having an air content of 4.5+/-1.5 percent. The amount of air entrainment admixtures to be added shall be determined based on the admixture's manufacturer recommendations and trial mixes.
3. Water-Reducing Admixtures (WRAs): Use water-reducing admixture when required to increase strength and improve workability. Normal WRAs, ASTM C494/C494M Type A and water-reducing and retarding admixtures, Type D. High-range water-reducing admixtures (HRWRAs) shall be of Types F or G.
4. Retarding Admixtures: When used, retarders shall be ASTM C494/C494M Type A or Type D.

2.5 CONCRETE MIXING

A. Ready-Mixed Concrete: Measure, batch, and mix concrete materials and concrete according to ASTM C94/C94M. Furnish batch tickets for each batch discharged and used in the Work.

B. When air temperature is between 85 and 90 degrees F, reduce mixing and delivery time from 1-1/2 hours to 75 minutes; when air temperature is above 90 degrees F, reduce mixing and delivery time to 60 minutes.

C. Project-Site Mixing: Measure, batch, and mix concrete materials and concrete according to ASTM C94/C94M. Mix concrete materials in appropriate drum-type batch machine mixer.

1. For concrete batches of 1 cu. yd. or smaller, continue mixing at least 1-1/2 minutes, but not more than 5 minutes after ingredients are in mixer, before any part of batch is released.
2. For concrete batches larger than 1 cu. yd., increase mixing time by 15 seconds for each additional 1 cu. yd.
3. Provide batch ticket for each batch discharged and used in the Work, indicating Project identification name and number, date, mixture type, mixing time, quantity, and amount of water added.

2.6 SOURCE QUALITY CONTROL

A. Provide mix design for concrete roadway pavement, concrete driveway pavement, and concrete sidewalk.

B. Submit proposed mix design of each class of concrete to appointed firm for review prior to commencement of Work.

C. Tests on cement, aggregates, and mixes will be performed to ensure conformance with specified requirements.

D. Test samples according to ASTM C94/C94M.

PART 3 - EXECUTION

3.1 EXAMINATION

A. Examine exposed subgrades and subbase surfaces for compliance with requirements for dimensional, grading, and elevation tolerances.

B. Proof-roll prepared subbase surface below concrete paving to identify soft pockets and areas of excess yielding.

C. Completely proof-roll subbase in one direction. Limit vehicle speed to 3 mph.

D. Proof-roll with a pneumatic-tired and loaded, 10-wheel, tandem-axle dump truck weighing not less than 15 tons.

E. Correct subbase with soft spots and areas of pumping or rutting exceeding depth of 1/2 inch.

F. Proceed with installation only after unsatisfactory conditions have been corrected.

G. Ensure that sufficient area is prepared and compacted beyond the edge of paving. This area will be used as a wheel track for the paver or as a foundation for the side forms.

3.2 PREPARATION

A. Remove loose material from compacted subbase surface immediately before placing concrete.

B. Keep grade uniformly moist immediately before concrete is placed. Verify that the base is sprinkled sufficiently ahead of the paving train to keep material moist without ponding water.

3.3 INSTALLATION

A. Edge Forms and Screed:

1. Set, brace, and secure edge forms, bulkheads, and intermediate screed guides to required lines, grades, and elevations. Install forms to allow continuous progress of work and so forms can remain in place at least 24 hours after concrete placement.
2. Clean forms after each use and coat with form-release agent to ensure separation from concrete without damage.

B. Steel Reinforcement:

1. General: Comply with CRSI's "Manual of Standard Practice" for fabricating, placing, and supporting reinforcement.
2. Clean reinforcement of loose rust and mill scale, earth, ice, or other bond-reducing materials.
3. Arrange, space, and securely tie bars and bar supports to hold reinforcement in position during concrete placement. Maintain minimum cover to reinforcement.
4. Install welded-wire reinforcement in lengths as long as practicable. Lap adjoining pieces at least one full mesh, and lace splices with wire. Offset laps of adjoining widths to prevent continuous laps in either direction.
5. Zinc-Coated Reinforcement: Use galvanized-steel wire ties to fasten zinc-coated reinforcement. Repair cut and damaged zinc coatings with zinc repair material.
6. Epoxy-Coated Reinforcement: Use epoxy-coated steel wire ties to fasten epoxy-coated reinforcement. Repair cut and damaged epoxy coatings with epoxy repair coating according to ASTM D3963/D3963M.
7. Install fabricated bar mats in lengths as long as practicable. Handle units to keep them flat and free of distortions. Straighten bends, kinks, and other irregularities, or replace units as required before placement. Set mats for a minimum 2 inch overlap of adjacent mats.
8. Install dowel bars and support assemblies at joints as shown on the plans. Lubricate or coat with asphalt one-half of dowel length to prevent concrete bonding to one side of joint. Ensure dowel bars and tie bars are placed in accordance with dimensions and provisions of Contract Plans. Ensure dowels are of correct size and length. Apply lubricant to one half of dowel length but not to the tie bars. Ensure joint locations are properly and accurately marked for the saw crew.

C. Joints:

1. Construct joints that conform to the locations and details in the plans. Joints shall be constructed perpendicular to the finished grade of the pavement. Provide joints that are straight and continuous from edge to edge or end to end of the pavement with no abrupt offset and no gradual deviation greater than 1/2 inch.
2. Change from the jointing pattern shown on Drawings or the approved shop drawings is not allowed without written approval.
3. Seal joints immediately following curing of the concrete or as soon thereafter as weather conditions permit.
4. When Joints intersect each other, it should be at a right angle. Also, joints should form 90-degree angles with free pavement edges. When the alignment of a joint is less than 90 degrees with a free edge, route the last 3 feet of the joint to run perpendicular to the free edge.
5. When joining existing paving, place transverse joints to align with previously placed joints unless otherwise indicated on the plans. When new joints mismatch existing joints, provide steel reinforcement for the first row of panels in the new concrete pavement.
6. Do not continue reinforcement through sides of paving strips unless otherwise indicated.
7. Provide tie bars at sides of paving strips where indicated.
8. Contraction (Control) Joints: The purpose of contraction joints is to relieve early shrinkage stress within the pavement.

    a. Contraction joints must be cut as soon as the concrete has hardened enough to support the saw equipment and allow cutting without excessive chipping, spalling, or tearing of the cut.
    b. Require immediate correction of the operation if excessive raveling occurs during sawing.

c. If a sharp edge joint is being obtained on control cutting, it can generally be regarded that the concrete has hardened excessively, and sawing is being conducted late.

9. Verify that joints are centered over dowels.

   a. Saw the joints at the required spacing consecutively in the sequence of the concrete placement.
   b. Immediately after the joint is sawed, thoroughly flush the saw cut and adjacent concrete surface with water and vacuumed until all waste from sawing is removed from the joint and adjacent concrete surface.
   c. Respray the surface around the joint with curing compound as soon as free water disappears.
   d. Take necessary precautions to ensure that the concrete is properly protected from damage and cured at sawed joints.
   e. Construct contraction joints for a depth equal to at least one-fourth of the concrete thickness, or as shown on the plans. Construct contraction joints by grooving or saw-cutting as follows:

10. Grooved Joints: Form contraction joints after initial floating by grooving and finishing each edge of joint with grooving tool to a 3/8 inch radius. Repeat grooving of contraction joints after applying surface finishes.

    a. Tolerance: Ensure that grooved joints are within 3 inch either way from centers of dowels.

11. Sawed Joints: Form contraction joints with power saws equipped with shatterproof abrasive or diamond-rimmed blades. Cut 1/8-inch- wide joints into concrete when cutting action will not tear, abrade, or otherwise damage surface and before developing random contraction cracks.

    a. Tolerance: Ensure that sawed joints are within 3 inch either way from centers of dowels.

12. Construction Joints: Set construction joints at side forms and at end terminations of paving where paving operations are stopped for more than one-half hour. Provide construction joints at a planned joint location. Install dowels, tie bars in the construction joints, or thicken the edges as indicated.
13. Isolation/ Expansion Joints: Form isolation joints of preformed joint-filler strips abutting concrete curbs, catch basins, manholes, inlets, structures, other fixed objects, and where indicated.

    a. Furnish joint fillers in one-piece lengths. Where more than one length is required, lace or clip joint-filler sections together.
    b. Terminate joint filler not less than 1/2 inch or more than 1 inchbelow finished surface if joint sealant is indicated.
    c. Place top of joint filler flush with finished concrete surface if joint sealant is not indicated.
    d. During concrete placement, protect top edge of joint filler with metal, plastic, or other temporary preformed cap. Remove protective cap after concrete has been placed on both sides of joint.

14. Edging: After initial floating, tool edges of paving, gutters, curbs, and joints in concrete with an edging tool to a 3/8 inch radius. Repeat tooling of edges after applying surface finishes. Eliminate edging-tool marks on concrete surfaces.

D. Concrete Hauling and Placement:

1. Before placing concrete, inspect and complete formwork installation, steel reinforcement, and items to be embedded or cast-in.
2. Remove snow, ice, or frost from subbase surface and steel reinforcement before placing concrete. Do not place concrete on frozen surfaces.
3. Moisten subbase to provide a uniform dampened condition at time concrete is placed. Do not place concrete around manholes or other structures until they are at required finish elevation and alignment.
4. Provide transporting equipment designed and operated to deliver and discharge the required concrete mixture completely without segregation.
5. Comply with ACI 301 requirements for measuring, mixing, transporting, and placing concrete.
6. Do not add water to concrete during delivery or at Project site. Do not add water to fresh concrete after testing is completed.
7. Deposit and spread concrete in a continuous operation inside formed area. Transporting equipment is not to be allowed to operate on the prepared and compacted underlying material. Do not push or drag concrete into place or use vibrators to move concrete into place.
8. Consolidate concrete according to ACI 301 by mechanical vibrating equipment supplemented by hand spading, rodding, or tamping. Insert vibrators into the concrete to a depth that provides the best full-depth consolidation but not closer to the underlying material than 2 inches. Insert hand-operated vibrators between 6 to 15 inches on centers. Excessive vibration is not permitted. Any evidence of inadequate consolidation (honeycomb along the edges, large air pockets, or any other evidence) requires the immediate stopping of the paving operation and approved adjustment of the equipment or procedures.
9. Consolidate concrete along face of forms with an internal vibrator. Keep vibrator away from joint assemblies, reinforcement, or side forms. Use only square-faced shovels for hand spreading and consolidation. Consolidate with care to prevent dislocating reinforcement dowels and joint devices.
10. Screed paving surface with a straightedge and strike off.
11. Initial floating stage between screeding and final float finish is included in this article rather than in "Concrete Protection and Curing" Article.
12. Commence initial floating using bull floats or darbies to impart an open-textured and uniform surface plane before excess moisture or bleedwater appears on the surface. Do not further disturb concrete surfaces before beginning finishing operations or spreading surface treatments.
13. Curbs and Gutters: Use design mixture for automatic machine placement. Produce curbs and gutters to required cross section, lines, grades, finish, and jointing.

E. Slip-Form Paving: Use design mixture for automatic machine placement. Produce paving to required thickness, lines, grades, finish, and jointing.

1. Compact subbase and prepare subgrade of sufficient width to prevent displacement of slip-form paving machine during operations.

F. Detectable Warning Installation:

1. Blockouts: Form blockouts in concrete for installation of detectable paving units.
2. Tolerance for Opening Size: Plus 1/4 inch, no minus.
3. Cast-in-Place Detectable Warning Tiles: Form blockouts in concrete for installation of tiles. Screed surface of concrete where tiles are to be installed to elevation, so that edges of installed tiles will be flush with surrounding concrete paving. Embed tiles in fresh concrete immediately after screeding concrete surface.
4. Stamped Detectable Warnings: Install stamped detectable warnings as part of a continuous concrete paving placement and according to stamp-mat manufacturer's written instructions.

    a. Before using stamp mats, verify that the vent holes are unobstructed.
    b. Apply liquid release agent to the concrete surface and the stamp mat.
    c. Stamping: While initially finished concrete is plastic, accurately align and place stamp mats in sequence. Uniformly load, gently vibrate, and press mats into concrete to produce imprint pattern on concrete surface. Load and tamp mats directly perpendicular to the stamp-mat surface to prevent distortion in shape of domes. Press and tamp until mortar begins to come through all of the vent holes. Gently remove stamp mats.
    d. Trimming: After 24 hours, cut off the tips of mortar formed by the vent holes.

5. Remove residual release agent according to manufacturer's written instructions, but no fewer than three days after stamping concrete. High-pressure-wash surface and joint patterns, taking care not to damage stamped concrete. Control, collect, and legally dispose of runoff.
6. Insert requirements for concrete stain, pigmented sealer, or pigmented curing and sealing compound if pigment is required. Pigmented mineral dry-shake hardener is not used for stamped detectable warnings.

3.4 TOLERANCES

A. Comply with tolerances in ACI 117/ACI 117M and as follows:

B. ACI 117/ACI 117M establishes few paving tolerances; those in subparagraphs below are based on ACI 330.1. Revise to suit Project.

C. Elevation: 3/4 inch.

D. Thickness: Plus 3/8 inch, minus 1/4 inch.

E. Surface: Gap below 10 feet long; unleveled straightedge not to exceed 1/2 inch.

F. Alignment of Tie-Bar End Relative to Line Perpendicular to Paving Edge: 1/2 inch per 12 inches of tie bar.

G. Lateral Alignment and Spacing of Dowels: 1 inch.

H. Vertical Alignment of Dowels: 1/4 inch.

I. Alignment of Dowel-Bar End Relative to Line Perpendicular to Paving Edge: 1/4 inch per 12 inchesof dowel.

J. Joint Spacing: 3 inch.

K. Contraction Joint Depth: Plus 1/4 inch, no minus.

L. Joint Width: Plus 1/8 inch, no minus.

3.5 FINISHING

A. General: Do not add water to concrete surfaces during finishing operations.

B. Float Finish: Begin the second floating operation when bleedwater sheen has disappeared and concrete surface has stiffened sufficiently to permit operations. Float surface with power-driven floats or by hand floating if area is small or inaccessible to power units. Finish surfaces to true planes. Cut down high spots and fill low spots. Refloat surface immediately to uniform granular texture.

1. Burlap Finish: Drag a seamless strip of damp burlap across float-finished concrete, perpendicular to line of traffic, to provide a uniform, gritty texture.
2. Medium-to-Fine-Textured Broom Finish: Draw a soft-bristle broom across float-finished concrete surface, perpendicular to line of traffic, to provide a uniform, fine-line texture.
3. Medium-to-Coarse-Textured Broom Finish: Provide a coarse finish by striating float-finished concrete surface 1/16 to 1/8 inch deep with a stiff-bristled broom, perpendicular to line of traffic.

3.6 SPECIAL FINISHES

A. Monolithic Exposed-Aggregate Finish: Expose coarse aggregate in paving surface as follows:

1. Immediately after float finishing, spray-apply chemical surface retarder to paving according to manufacturer's written instructions.
2. Cover paving surface with plastic sheeting, sealing laps with tape, and remove when ready to continue finishing operations.
3. Without dislodging aggregate, remove mortar concealing the aggregate by lightly brushing surface with a stiff, nylon-bristle broom. Do not expose more than one-third of the average diameter of the aggregate and not more than one-half of the diameter of the smallest aggregate.
4. Fine-spray surface with water and brush. Repeat cycle of water flushing and brushing until cement film is removed from aggregate surfaces to depth required.

B. Seeded Exposed-Aggregate Finish: Immediately after initial floating, spread a single layer of aggregate uniformly on paving surface. Tamp aggregate into plastic concrete and float finish to entirely embed aggregate with mortar cover of 1/16 inch.

1. Spray-apply chemical surface retarder to paving according to manufacturer's written instructions.

2. Cover paving surface with plastic sheeting, sealing laps with tape, and remove sheeting when ready to continue finishing operations.
3. Without dislodging aggregate, remove mortar concealing the aggregate by lightly brushing surface with a stiff, nylon-bristle broom. Do not expose more than one-third of the average diameter of the aggregate and not more than one-half of the diameter of the smallest aggregate.
4. Fine-spray surface with water and brush. Repeat cycle of water flushing and brushing until cement film is removed from aggregate surfaces to depth required.

C. Slip-Resistive Aggregate Finish: Before final floating, spread slip-resistive aggregate finish on paving surface according to manufacturer's written instructions and as follows:

1. Uniformly spread 25 lb./100 sq. ft. of dampened, slip-resistive aggregate over paving surface in two applications. Tamp aggregate flush with surface using a steel trowel, but do not force below surface.
2. Uniformly distribute approximately two-thirds of slip-resistive aggregate over paving surface with mechanical spreader, allow to absorb moisture, and embed by power floating. Follow power floating with a second slip-resistive aggregate application, uniformly distributing remainder of material at right angles to first application to ensure uniform coverage and embed by power floating.
3. Cure concrete with curing compound recommended by slip-resistive aggregate manufacturer. Apply curing compound immediately after final finishing.
4. After curing, lightly work surface with a steel-wire brush or abrasive stone and water to expose nonslip aggregate.

D. Rock-Salt Finish: After initial troweling, uniformly spread rock salt over paving surface at the rate of 5 lb./100 sq. ft..

1. Embed rock salt into plastic concrete with roller or magnesium float.
2. Cover paving surface with 1-mil- thick polyethylene sheet and remove sheet when concrete has hardened and seven-day curing period has elapsed.
3. After seven-day curing period, saturate concrete with water and broom-sweep surface to dissolve remaining rock salt, thereby leaving pits and holes.

E. Pigmented Mineral Dry-Shake Hardener Finish: After initial floating, apply dry-shake materials to paving surface according to manufacturer's written instructions and as follows:

1. Uniformly spread dry-shake hardener at a rate of 100 lb./100 sq. ft. unless greater amount is recommended by manufacturer to match paving color required.
2. Uniformly distribute approximately two-thirds of dry-shake hardener over the concrete surface with mechanical spreader; allow hardener to absorb moisture and embed it by power floating. Follow power floating with a second application of pigmented mineral dry-shake hardener, uniformly distributing remainder of material at right angles to first application to ensure uniform color and embed hardener by final power floating.
3. After final power floating, apply a hand-troweled finish followed by a broom finish.
4. Cure concrete with curing compound recommended by dry-shake hardener manufacturer. Apply curing compound immediately after final finishing.

3.7 FIELD QUALITY CONTROL

A. Testing Agency: Engage a qualified testing agency to perform tests and inspections.

B. Testing Services: Testing and inspecting of composite samples of fresh concrete obtained according to ASTM C172/C172M shall be performed according to the following requirements:

1. Testing Frequency: Obtain at least one composite sample for each 5000 sq. ft. or fraction thereof of each concrete mixture placed each day.

    a. When frequency of testing will provide fewer than five compressive-strength tests for each concrete mixture, testing shall be conducted from at least five randomly selected batches or from each batch if fewer than five are used.

2. Slump: ASTM C143/C143M; one test at point of placement for each composite sample, but not less than one test for each day's pour of each concrete mixture. Perform additional tests when concrete consistency appears to change.
3. Air Content: ASTM C231/C231M, pressure method; one test for each composite sample, but not less than one test for each day's pour of each concrete mixture.
4. Concrete Temperature: ASTM C1064/C1064M; one test hourly when air temperature is 40 deg Fand below and when it is 80 deg Fand above, and one test for each composite sample.
5. Compression Test Specimens: ASTM C31/C31M; cast and laboratory cure one set of three standard cylinder specimens for each composite sample.
6. Compressive-Strength Tests: ASTM C39/C39M; test one specimen at seven days and two specimens at 28 days.
7. A compressive-strength test shall be the average compressive strength from two specimens obtained from same composite sample and tested at 28 days.

C. Strength of each concrete mixture will be satisfactory if average of any three-consecutive compressive-strength tests equals or exceeds specified compressive strength and no compressive-strength test value falls below specified compressive strength by more than 500 psi.

D. Test results shall be reported in writing to Engineer, concrete manufacturer, and Contractor within 48 hours of testing. Reports of compressive-strength tests shall contain Project identification name and number, date of concrete placement, name of concrete testing and inspecting agency, location of concrete batch in Work, design compressive strength at 28 days, concrete mixture proportions and materials, compressive breaking strength, and type of break for both 7- and 28-day tests.

E. Nondestructive Testing: Impact hammer, sonoscope, or other nondestructive device may be permitted by Engineer but will not be used as sole basis for approval or rejection of concrete.

F. Coring: provide concrete cores at least 4 inch in diameter by full depth cut from points selected in the test section by the Engineer. The cores will be evaluated for surface paste, uniformity of aggregate distribution, segregation, voids, and thickness.

G. Additional Tests: Testing and inspecting agency shall make additional tests of concrete when test results indicate that slump, air entrainment, compressive strengths, or other requirements have not been met, as directed by Engineer.

H. Concrete paving will be considered defective if it does not pass tests and inspections.

I. Additional testing and inspecting, at Contractor's expense, will be performed to determine compliance of replaced or additional work with specified requirements.

J. Prepare test and inspection reports.

K. Strength Test Samples:

1. Sampling Procedures: ASTM C172.
2. Cylinder Molding and Curing Procedures: ASTM C31/C31M, cylinder specimens, standard cured.
3. Sample concrete and make one set of three cylinders for every 150 cu yds or less of each class of concrete placed each day and for every 5,000 sf of surface area paving.
4. Make one additional cylinder during cold weather concreting, and field cure.

L. Field Testing:

1. Slump Test Method: ASTM C143/C143M or Tex-415-A.
2. Air Content Test Method: Tex-414-A, Tex-416-A or ASTM C457.
3. Temperature Test Method: ASTM C1064/C1064M or Tex-422-A.
4. Measure slump and temperature for each compressive strength concrete sample.
5. Measure air content in air entrained concrete for each compressive strength concrete sample.

M. Cylinder Compressive Strength Testing:

1. Test Method: ASTM C39/C39M or Tex-418-A.
2. Test Acceptance: according to TxDOT standards.
3. Test one cylinder at 7 days.
4. Test two cylinders at 28 days.
5. Dispose remaining cylinders when testing is not required.

N. Maintain records of placed concrete items. Record date, location of pour, quantity, air temperature, and test samples taken.

3.8 PROTECTION

A. Immediately after placement, protect paving from premature drying, excessive hot or cold temperatures, and mechanical injury.

B. Coordinate minimum requirements for concrete strength with expected traffic conditions.

C. Do not permit pedestrian or vehicular traffic over paving for 7 days minimum after finishing.

D. Remove and replace concrete paving that is broken, damaged, or defective or that does not comply with requirements in this Section. Remove work in complete sections from joint to joint unless otherwise approved by Engineer.

E. Drill test cores, where directed by Engineer, when necessary to determine magnitude of cracks or defective areas. Fill drilled core holes in satisfactory paving areas with portland cement concrete bonded to paving with epoxy adhesive.

F. Protect concrete paving from damage. Exclude traffic from paving for at least 14 days after placement. When construction traffic is permitted, maintain paving as clean as possible by removing surface stains and spillage of materials as they occur.

G. Maintain concrete paving free of stains, discoloration, dirt, and other foreign material. Sweep paving not more than two days before date scheduled for Substantial Completion inspections.

H. Concrete Protection:

1. Protect freshly placed concrete from premature drying and excessive cold or hot temperatures.
2. Comply with ACI 306.1 for cold-weather protection.

I. Evaporation Retarder: Apply evaporation retarder to concrete surfaces if hot, dry, or windy conditions cause moisture loss approaching 0.2 lb/sq. ft. x h before and during finishing operations. Apply according to manufacturer's written instructions after placing, screeding, and bull floating or darbying concrete but before float finishing.

J. Begin curing after finishing concrete but not before free water has disappeared from concrete surface.

K. Curing Methods: Cure concrete by moisture curing, moisture-retaining-cover curing, curing compound, or a combination of these as follows:

1. Moisture Curing: Keep surfaces continuously moist for not less than seven days with the following materials:

   a. Water.
   b. Continuous water-fog spray.
   c. Absorptive cover, water saturated and kept continuously wet. Cover concrete surfaces and edges with 12 inch lap over adjacent absorptive covers.

2. Moisture-Retaining-Cover Curing: Cover concrete surfaces with moisture-retaining cover, placed in widest practicable width, with sides and ends lapped at least 12 inch, and sealed by waterproof tape or adhesive. Immediately repair any holes or tears occurring during installation or curing period, using cover material and waterproof tape.
3. Curing Compound: Apply uniformly in continuous operation by power spray or roller according to manufacturer's written instructions. Recoat areas subjected to heavy rainfall within three hours after initial application. Maintain continuity of coating, and repair damage during curing period.
4. Maintain temperature of air next to concrete above 40 degrees F for the full curing periods.

3.9 SCHEDULE

A. Concrete Sidewalks: 3,000 psi 28-day concrete, 4 inches thick, gray color Portland cement, exposed aggregate finish.

B. Concrete Area Paving: 3,500 psi 28-day concrete, 6 inches thick, 6/6 - 6 x 6-inch mesh reinforcing, wood float finish.

C. Concrete Roadways and Parking Areas: 3,500 psi 28-day concrete, with thickness and reinforcing as specified on Drawings, wood float finish.

END OF SECTION 321313

© 2023 CDM Smith
All Rights Reserved

This page intentionally left blank.

© 2024 CDM Smith
All Rights Reserved

SECTION 321373 - CONCRETE PAVING JOINT SEALANTS

PART 1 - GENERAL

1.1 RELATED DOCUMENTS

A. Drawings and general provisions of the Contract, including General and Supplementary Conditions and Division 01 Specification Sections, apply to this Section.

1.2 SUMMARY

A. Section Includes:

1. Cold-applied joint sealants.
2. Hot-applied joint sealants.
3. Cold-applied, fuel-resistant joint sealants.
4. Hot-applied, fuel-resistant joint sealants.
5. Joint-sealant backer materials.
6. Primers.

B. Related Requirements:

1. Section 321313 “Concrete Paving” for surface concrete pavement is pedestrian and traffic areas.

1.3 UNIT PRICES

A. Quantity of sealant will be paid based on actual measurement of the number of linear feet of in-place material that has been approved.

1.4 ACTION SUBMITTALS

A. Product Data: submit manufacturer certificate (data sheet) for each type of product and installation recommendations.

B. Copies of test reports.

C. Samples for Verification: For each kind and color of joint sealant required, provide Samples with joint sealants in 1/2-inch wide joints formed between two 6-inch long strips of material matching the appearance of exposed surfaces adjacent to joint sealants.

D. Paving-Joint-Sealant Schedule: Include the following information:

1. Joint-sealant application, joint location, and designation.
2. Joint-sealant manufacturer and product name.
3. Joint-sealant formulation.

4. Joint-sealant color.

1.5 QUALITY ASSURANCE

A. Installer Qualifications: An entity that employs installers and supervisors who are trained and approved by manufacturer.

B. Product Testing: Perform testing of materials in an approved independent laboratory and submit certified copies of test reports for approval 15 days prior to use of materials at the job site.

1.6 FIELD CONDITIONS

A. Do not proceed with installation of joint sealants under the following conditions:

1. When temperature within the joint wall is outside limits permitted by joint-sealant manufacturer or is below 40 degrees F.
2. When moisture is observed within joint.
3. Where joint widths are less than those allowed by joint-sealant manufacturer for applications indicated.
4. Where contaminants capable of interfering with adhesion have not yet been removed from joint substrates.
5. On same day as sawing occurred.

PART 2 - PRODUCTS

2.1 MATERIALS

A. Compatibility: Provide joint sealants, backing materials, and other related materials that are compatible with one another and with joint substrates under conditions of service and application, as demonstrated by joint-sealant manufacturer, based on testing and field experience.

B. Provide joint sealants for various areas of types indicated in Drawings and summarized below.

C. Hot-Applied Joint Sealants:

1. Hot-Applied, Single-Component Joint Sealant: ASTM D6690, Type I or Type II.

D. Cold-Applied Joint Sealants:

1. Single-Component, Nonsag, Silicone Joint Sealant: ASTM D5893/D 5893M, Type NS.
2. Single-Component, Self-Leveling, Silicone Joint Sealant: ASTM D5893/D 5893M, Type SL.
3. Multicomponent, Nonsag, Urethane, Elastomeric Joint Sealant: ASTM C920, Type M, Grade NS, Class 25, for Use T.
4. Single Component, Pourable, Urethane, Elastomeric Joint Sealant: ASTM C920, Type S, Grade P, Class 25, for Use T.

E. Hot-Applied, Fuel-Resistant Joint Sealants:

1. Hot-Applied, Fuel-Resistant, Single-Component Joint Sealants: ASTM D7116, Type I or Type II.

F. Joint-Sealant Backer Materials:

1. Provide backer material that is a compressible, nonshrinking, nonabsorbing material. Use backer material that is 20 to 30 percent larger in diameter than the nominal width of joint. Backer material shall be nonreactive with proposed joint sealant. Material shall have a melting point at least 5 degrees F greater than pouring temperature of sealant being used when tested in accordance with ASTM D789. Material shall also have a water absorption of not more than 5 percent of sample weight when tested in accordance with ASTM C1016.
2. Round Backer Rods for Cold- and Hot-Applied Joint Sealants: ASTM D5249, Type 1, of diameter and density required to control sealant depth and prevent bottom-side adhesion of sealant.
3. Round Backer Rods for Cold-Applied Joint Sealants: ASTM D5249, Type 3, of diameter and density required to control joint-sealant depth and prevent bottom-side adhesion of sealant.
4. Backer Strips for Cold- and Hot-Applied Joint Sealants: ASTM D5249; Type 2; of thickness and width required to control joint-sealant depth, prevent bottom-side adhesion of sealant, and fill remainder of joint opening under sealant.

G. Primers:

1. Primers: Product recommended by joint-sealant manufacturer where required for adhesion of sealant to joint substrates indicated.

PART 3 - EXECUTION

3.1 EXAMINATION

A. Examine joints to receive joint sealants, with Installer present, for compliance with requirements for joint configuration, installation tolerances, and other conditions affecting joint-sealant performance.

B. Proceed with installation only after unsatisfactory conditions have been corrected.

C. Inspect application equipment to ensure conformance to temperature requirements, proper proportioning, and mixing (if two-component sealant) and proper installation. Evidence of bubbling, or improper installation will result in suspending operations until causes of deficiencies are determined and corrected.

3.2 PREPARATION

A. Removal of existing sealant: cut loose in-place sealant from both joint faces and to depth indicated on drawings, using routing equipment, concrete saw, or waterblaster. Prior to further

cleaning operations, remove loose old sealant remaining in joint opening by blowing with compressed air.

B. Surface Cleaning of Joints: Before installing joint sealants, clean out joints immediately to comply with joint-sealant manufacturer's written instructions. Thoroughly clean joints to remove laitance, curing compound, and protrusions of hardened concrete.

1. Remove foreign material from joint substrates that could interfere with adhesion of joint sealant, including dust, old joint sealants, oil, grease, waterproofing, water repellents, water, surface dirt, and frost.

C. Joint Priming: Prime joint substrates where indicated or where recommended in writing by joint-sealant manufacturer, based on preconstruction joint-sealant-substrate tests or prior experience. Apply primer to comply with joint-sealant manufacturer's written instructions. Confine primers to areas of joint-sealant bond; do not allow spillage or migration onto adjoining surfaces.

3.3 INSTALLATION

A. Seal joints immediately following final cleaning of joint walls and following placement of backup material. Open joints, that cannot be sealed under conditions specified, or when rain interrupts sealing operations shall be recleaned and allowed to dry prior to installing sealant.

B. Comply with joint-sealant manufacturer's written installation instructions for products and applications indicated unless installation instructions are modified by Engineer.

C. Joint-Sealant Installation Standard: Comply with recommendations in ASTM C1193 for use of joint sealants as applicable to materials, applications, and conditions.

D. Install joint-sealant backings to support joint sealants during application and at position required to produce cross-sectional shapes and depths of installed sealants relative to joint widths that allow optimum sealant movement capability:

1. Do not leave gaps between ends of joint-sealant backings.
2. Do not stretch, twist, puncture, or tear joint-sealant backings.
3. Remove absorbent joint-sealant backings that have become wet before sealant application and replace them with dry materials.

E. Install joint sealants immediately following backing installation, using proven techniques that comply with the following:

1. Place joint sealants so they fully contact joint substrates.
2. Completely fill joint from the bottom up to 1/4 inch plus or minus 1/16th inch below pavement surface.
3. Produce uniform, cross-sectional shapes and depths relative to joint widths that allow optimum sealant movement capability.
4. Remove and discard excess or spilled sealant from pavement by approved methods.
5. Install sealant in such a manner as to prevent formation of voids and entrapped air.
6. Do not permit traffic over newly sealed pavement until authorized.

F. Tooling of Non-sag Joint Sealants: Immediately after joint-sealant application and before skinning or curing begins, tool sealants according to the following requirements to form smooth, uniform beads of configuration indicated; to eliminate air pockets; and to ensure contact and adhesion of sealant with sides of joint:

1. Remove excess joint sealant from surfaces adjacent to joints.
2. Use tooling agents that are approved in writing by joint-sealant manufacturer and that do not discolor sealants or adjacent surfaces.

3.4 PROTECTION

A. Clean off excess joint sealant as Work progresses, by methods and with cleaning materials approved in writing by joint-sealant manufacturers.

B. Protect joint sealants, during and after curing period, from contact with contaminating substances and from damage resulting from construction operations or other causes so sealants are without deterioration or damage at time of Substantial Completion. If, despite such protection, damage or deterioration occurs, cut out and remove damaged or deteriorated joint sealants immediately and replace with joint sealant so installations in repaired areas are indistinguishable from original work.

END OF SECTION 321373

© 2024 CDM Smith
All Rights Reserved

This page intentionally left blank.

©2024 CDM Smith
All Rights Reserved

SECTION 330507.25 - AUGER BORING

PART 1 - GENERAL

1.1 RELATED DOCUMENTS

A. Drawings and general provisions of the Contract, including General and Supplementary Conditions and Division 01 Specification Sections, apply to this Section.

1.2 SUMMARY

A. Section Includes: Auger boring.

B. Related Requirements:

1. Section 310900 “Geotechnical Instrumentation and Monitoring” for monitoring of ground, groundwater, and existing structures.
2. Section 312000 “Earthwork” for excavating, backfilling, and compaction in open areas.
3. Section 312316 “Rock Removal” for removal of existing rock via non-explosive methods.
4. Section 312319 "Dewatering" for lowering and disposing of groundwater during construction.
5. Section G4 “Pipe Excavation, Trenching, Embedment, Encasement and Backfilling” for stated work.
6. Section 315000 "Excavation Support and Protection" for temporary support of excavations.

1.3 DEFINITIONS

A. Admixtures: Materials other than water, aggregate, or cement added to grout mix to modify mix properties.

B. Annular Grouting: Injection of cement grout into annulus between jacked pipe and soil, weathered rock or rock.

C. Casing Pipe: The outer sleeve that is installed by jacking method.

D. Carrier Pipe: The pipe inserted within the casing pipe and which acts as the conveyor for water.

E. Jacking Pit: The pit in which the jacking equipment is installed and from which both the casing pipe and carrier pipe are launched.

F. Auger Boring: The use of hydraulic jacks pushing against the casing pipe with hydraulic jacks located in the jacking pit. Excavated soil, weathered rock or rock is removed with a continuous flight auger located within the casing pipe.

G. Receiving Pit: The pit at the point where the carrier pipe exits the casing pipe.

H. Tunnel: An underground opening supported using the casing pipe.

1.4 ACTION SUBMITTALS

A. Product Data: For each type of product and description of installation equipment.

B. Shop Drawings: Submit shop drawings, method statements, equipment, and product data for materials to be used for auger boring operations, carrier pipe installation, and backfilling. Include the following and shall be signed and sealed by Contractor's Design Engineer licensed in the State of Texas:

1. Locations, dimensions, elevations and details of jacking and receiving pits and casing pipe.
2. Equipment and procedures of auger boring operations.
3. Control of groundwater and surface drainage.
4. Method of soil/weathered rock/rock stabilization and/or groundwater control at face.
5. Method of face excavation.
6. Method of pit support.
7. Maintenance of alignment and grade.
8. Grouting outside of casing pipe, including methods of grouting, grout mix design, grout mixing and batching, maximum grout pressure, and maximum grout volume.
9. Materials and installation of casing and carrier pipes.
10. Annular grouting between casing and carrier pipes.
11. Bulkhead design and temporary support of carrier pipe inside casing.
12. Schedule.

1.5 DELEGATED-DESIGN SUBMITTALS

A. Design Calculations: Submit design calculations detailing equipment and construction methods to be used for auger boring operations as specified herein and as shown on Drawings. Design calculation shall include, but not limited to, anticipated jacking load, casing pipe deformation, and calculations for preventing floatation and deformation of carrier pipe during backfill grouting to fill annular space between carrier pipe and casing pipe.

1.6 INFORMATIONAL SUBMITTALS

A. Qualification Data: For Contractor and Contractor's Design Engineer.

B. Quality control plan, including procedures for producing, sampling and testing of grout, methods for controlling critical mix parameters and injection pressures, qualification of sampling and testing personnel, calibration certificates for gauges, scales, meters, and jacks.

C. Daily surveyor reports of casing pipe position and control point monitoring conducted by Contractor's surveyor.

1.7 QUALITY ASSURANCE

A. Contractor Qualifications: Experienced in auger boring installation with at least 5 years of successful auger boring installations, employing labor and supervisory personnel who are similarly experienced in this type of work.

1. Superintendent: Minimum five years of experience in auger boring construction methods.

B. Contractor's Design Engineer: Professional Engineer licensed in the State of Texas with minimum 5 years of professional experience in design of auger boring, excavation support, dewatering, grouting, and soil stabilization.

1.8 DELIVERY, STORAGE, AND HANDLING

A. Inspection: Accept materials on Site in manufacturer's original packaging and inspect for damage.

B. Store excavated materials according to Section G6 “Sedimentation and Temporary Erosion Control” to prevent erosion of soil type materials and contamination of adjacent water sources:

1. According to manufacturer instructions.
2. Stack piping lengths no more than three layers high.
3. Store field joint materials in original shipping containers in dry area indoors.

C. Handling: Support pipes with nylon slings during handling.

D. Protection:

1. Protect materials from moisture and dust by storing in clean, dry location remote from construction operations areas.
2. Protect pipe from entry of foreign materials and water by installing end caps and closures completing sections of Work, and isolating parts of completed system.
3. Provide additional protection according to manufacturer instructions.

1.9 FIELD CONDITIONS

A. Project-Site Information: Geotechnical data has been prepared for this Project and is available for information only. Owner is not responsible for interpretations or conclusions drawn from this geotechnical data.

1. Make additional test borings and conduct other exploratory operations necessary for auger boring installation according to the performance requirements.
2. Groundwater levels may vary during the work and should not be assumed to be accurately represented by groundwater level readings reported in the geotechnical data.
3. Geotechnical data is included elsewhere in Project Manual.

PART 2 - PRODUCTS

2.1 MATERIALS

A. Casing Pipe:

1. Steel casings shall be in accordance with Section W4.

B. Casing Spacers:

1. Spacers shall be in accordance with Section W4.

C. Bulkheads:

1. Provide bulkheads to seal space between carrier pipe and casing pipe at each end of casing pipe for grout containment.
2. Construct bulkheads of masonry and mortar for a minimum 12-inch thickness.

D. Grout Outside of Casing Pipe:

1. Pressure grout between casing pipe and undisturbed earth with a uniform mixture of cement and sand or similar commercial product that hardens to a minimum compressive strength of 500 psi. Ensure grout is readily pumpable.

PART 3 - EXECUTION

3.1 PREPARATION

A. Notify Owner at least seven days in advance of the planned start of work.

B. Call "One Call" (Texas811) not less than three working days before performing Work.

1. Request underground utilities to be located and marked within and surrounding construction areas.

C. Provide barricades, fencing, or other safety measures to prevent public access into Work and staging areas.

D. Obtain permits from local authority having jurisdiction prior to initiating jacking work.

E. Control groundwater at all times. If groundwater is expected to be above or within casing level, install a groundwater control system consisting of vertical or horizontal wells or well points and operate such that groundwater level is lowered to at least casing invert level at face. Design and operate dewatering in accordance with Section 312319 "Dewatering".

F. Install, initialize, and prepare to record readings from all geotechnical instrumentation as required by Section 310900 "Geotechnical Instrumentation and Monitoring" prior to commencing jacking operation.

3.2 JACKING AND RECEIVING PITS

A. Refer to Section 315000 "Excavation Support and Protection" for temporary excavation support requirements.

B. Include design and details of thrust block, base support and tunnel opening in excavation support submittals.

C. Furnish and install a level, lean concrete mat at least 6 inches thick at bottom of jacking and exit shafts to protect subgrade and provide a working surface.

D. Furnish, install and remove, to extent required, thrust blocks or such other provisions as may be required in driving casing pipe forward.

E. Do not use trench boxes as support of excavation for any jacking and receiving pits unless approved by Engineer.

F. Keep jacking and receiving pit subgrades continuously free from groundwater and surface waters during pipe jacking operations.

3.3 PIPE JACKING OPERATIONS

A. General:
   1. Install casing pipes under roads to limits shown in accordance with approved encroachment agreement or permit.
   2. Do not allow at any time, construction to interfere with normal and safe operation of roadway.
   3. Provide material, equipment, and facilities required for installing, positioning, and jacking casing pipe.

B. Tolerances

   1. Consistently maintain proper alignment and elevation of casing throughout jacking operation. Tolerances for installation of casing pipes:

      a. Vertical: Plus or minus 0.50 feet per 100 feet of casing length.
      b. Horizontal: Plus or minus 1.0 feet per 100 feet of casing length.

C. Pipe Jacking Set-Up

   1. Establish survey station marks over entire length of jacked casing pipe during jacking operations at intervals of not more than 20 feet and to an accuracy of 0.01 feet.
   2. Use a jacking ring consisting of either steel or concrete construction. Allow jacking ring to distribute jacking pressure evenly around wall of casing pipe.
   3. Uniformly distribute pipe jacking pressures through jacking frame and parallel to axis of pipe. Take extreme care to prevent crushing or damage to joints of casing pipe.
   4. Use a jacking frame fabricated from structural steel members. Design jacking frame to distribute stresses from jacks evenly to jacking ring.
   5. Use thrust blocks adequately designed to carry thrust of jacks to soil without excessive soil deflection and in such a manner as to avoid any disturbance of adjacent structures or

utilities and to jack casing reliably in correct alignment. Refer to Section 315000 "Excavation Support and Protection" for thrust block design requirements.

D. Pipe Jacking Operation

1. Do not jack directly against carrier pipe.
2. Commence pipe jacking only after Contractor's surveyor has verified in writing to Engineer that first pipe casing segment is at correct location and elevation and is oriented at correct horizontal and vertical direction. After first segment has been jacked forward, Contractor's surveyor shall again verify in writing to Engineer that alignment is correct. Should alignment not be correct at this or any point, stop jacking operation and do not resume until Contractor has modified jacking operation as required to maintain proper alignment.
3. Remove material from casing face by augering**.** Do not extend auger and cutting head assembly past leading edge of casing and arrange to provide reasonable obstruction to free flow of soft or poor subsurface materials. Provide an auger and cutting head assembly that is removable from casing pipe in event an obstruction is encountered.
4. Minimize occurrence of voids outside casing pipe. Fill all voids with cement grout.
5. Take approved remedial measures if voids develop or if bored hole diameter is greater than outside diameter of pipe (including coating) by more than approximately 1 inch.
6. Excavate only from within casing to minimize volume of voids outside jacked casing pipe, and to minimize raveling of soils at face. Exercise care in removal of excavation.
7. Protect exposed face of excavation if work is stopped for any reason. Protect exposed face of excavation with a bulkhead satisfactory to Engineer. Secure tunnel face if auger boring operation ceases for any period of time longer than twelve hours.
8. Check alignment of casing pipe daily by Contractor's surveyor as casing progresses and provide daily written reports to Engineer. Make adjustments immediately if any misalignment occurs.
9. After removal of all dewatering systems, do not install carrier pipe until groundwater seepage into casing pipe does not exceed 20 gallons per hour/100 linear feet of finished casing pipe.
10. Maximum allowable deflection of inside diameter of casing in any direction from a true circle: One percent of inside diameter. Measure deflection at not more than 50-foot-intervals.
11. Repair all damage resulting from subsidence, collapsed casings, or ground losses into jacked pipe casing and refill any voids with cement grout. Where such ground losses are so severe that they result in damage to underground or surface pavement, existing utilities or structures, remedy such damage. Where filling of voids cannot be effectively carried out from below, excavate openings from surface for purpose of backfilling voids, if directed by Engineer. If in judgment of Engineer, a portion of casing or pipe requires reinforcing because of such collapse, furnish and place such reinforcement, if directed by Engineer. Install reinforcement when stability of soil adjacent to casing or casing pipe has been affected by loss of ground, if directed by Engineer.
12. Effects on road traffic resulting from such ground loss, including all costs and all coordination with and meeting traffic control requirements of TXDOT traffic control, permit acquisition, fees, fines, etc. are Contractor's responsibility.

3.4 GROUTING OUTSIDE OF CASING PIPE

A. Immediately following auger boring operation, pressure grout jacked section to fill all voids outside of casing pipe. Perform grouting from interior of casing pipe through grout holes.

B. Start grouting in lowest connections and proceed until grout begins to flow from upper connections. Completely fill all voids.

C. Do not allow grout pressure to exceed one-half of existing overburden pressure.

D. Apparatus for mixing and placing grout shall be capable of mixing effectively and stirring grout and then forcing it into grout connections in a continuous uninterrupted flow.

E. After grouting is complete, maintain grout placement by bulkhead or other suitable devices until grout has set sufficiently in judgment of Engineer, or for a minimum of 24 hours, whichever is longer. After grout is set, completely fill any grout holes with concrete and finished neatly without evidence of voids or projections.

3.5 CARRIER PIPELINE INSTALLATION IN CASING

A. Design casing spacers to withstand forces to pull pipe sections into casing, and to support full weight of pipe using methods certified by Manufacturer. Prevent any movement or displacement of casing spacers.

B. Air test each gasketed air-testable pipe joint immediately after installation per appropriate pipe specification. Block pipe as necessary to prevent joint separation during testing and reduce pressure to 2.0 pounds per square inch (psi). Permit no exceptions to this requirement.

3.6 RESTORATION

A. At the conclusion of all auger boring operations, remove excavation support systems for jacking and receiving pits. If withdrawal should damage or disturb the roadway subgrade, leave supports in place and cut off minimum of 36 inches below finished grade.

B. Restore all areas disturbed by construction to existing or better condition and maintained until accepted by Engineer, and Owner.

END OF SECTION 330507.25

This page intentionally left blank.

©2024 CDM Smith
All Rights Reserved

SECTION 330526 - UTILITY IDENTIFICATION

PART 1 - GENERAL

1.1 RELATED DOCUMENTS

A. Drawings and general provisions of the Contract, including General and Supplementary Conditions and Division 01 Specification Sections, apply to this Section.

1.2 SUMMARY

A. Section Includes:
   1. Pipeline marker posts.
   2. Plastic ribbon tape for placement above direct-buried utility.
   3. Trace wire for placement above direct-buried utility.

B. Related Requirements:
   1. Section 312000 “Earthwork.”

1.3 ACTION SUBMITTALS

A. Only request submittals needed to verify compliance with Project requirements.

B. Product Data: Submit manufacturer's catalog information for each product required.

1.4 INFORMATIONAL SUBMITTALS

A. Include following Paragraph for submission of physical samples for selection of finish, color, texture, and other properties.

B. Manufacturer's Certificate: Certify that products meet or exceed specified requirements.

C. Include separate Paragraphs for additional certifications.

D. Qualifications Statement:
   1. Submit qualifications for manufacturer.

1.5 CLOSEOUT SUBMITTALS

A. Project Record Documents: Record actual locations of tagged valves.

1.6 QUALITY ASSURANCE

A. Include this Article to specify compliance with overall reference standards affecting products and installation included in this Section.

B. Conform to TXDOT, City of Georgetown Utilities, APWA Uniform Color Code, ANSI Z535.1, and ASME A13.1 for color scheme for identification of piping systems and accessories.

1.7 QUALIFICATIONS

A. Manufacturer: Company specializing in manufacturing products specified in this Section with minimum three years' documented experience.

PART 2 - PRODUCTS

2.1 PIPELINE MARKER POSTS

A. Manufacturers:
   1. Tech Products, Inc., of Staten Island NY
   2. Berntsen International Inc. of Madison, Wisconsin.
   3. William Frick & Company, of Libertyville, Illinois.

B. Insert descriptive specifications below to identify Project requirements and to eliminate conflicts with products specified above.

C. Description:
   1. Material: Aluminum or High-density polypropylene.
   2. Width: 5 inches (min.)
   3. Length: 10 inches. (min.)
   4. Color: as requested by Owner.
   5. Embedment: T-anchor.

2.2 RIBBON TAPE

A. Manufacturers:
   1. Berntsen International Inc.
   2. Pipemarker.com; Brimar Industries, Inc.

B. Insert descriptive specifications below to identify Project requirements and to eliminate conflicts with products specified above.

C. Description:
   1. Material: Polyethylene.
   2. Brightly colored, continuously printed.
   3. Minimum Size: 3 inches wide by 4 mils thick.
   4. Manufactured for direct burial service.
   5. Imprint: “Caution Buried Sewer” in large letters.

2.3 TRACE WIRE

A. Consider this Article for nonmetallic pipe.

B. Manufacturers:
   1. Northtown Company.
   2. Priority Wire and Cable, Inc.
   3. Tracerwire.
   4. Description:
      a. Conductor: Magnetically detectable.
      b. Covering: Brightly colored plastic, imprinted with ”Waterline” in large letters.

PART 3 - EXECUTION

3.1 INSTALLATION

A. Pipeline Marker Posts, Utility Markers, and Marking Flags: As recommended by manufacturer.

B. Ribbon Tape and Trace Wire:
   1. Continuous over top of pipe.
   2. If multiple pipes occur in common trench, locate tape or wire above centerline of trench.
   3. Place Ribbon Tape and Trace Wire in the correct orientation, and anchor as necessary to prevent dislocation during placement of backfill.
   4. Backfill above Ribbon Tape and Trace Wire taking care to avoid dislocation. Compaction equipment shall not directly contact the Ribbon Tape or Trace Wire.
   5. Coordinate with trench Work as specified in Section 312000 “Earthwork” .

END OF SECTION 330526

©2024 CDM Smith
All Rights Reserved

This page intentionally left blank.

©2024 CDM Smith
All Rights Reserved

SECTION 330537 - CENTRIFUGALLY CAST FIBERGLASS-REINFORCED POLYMER MORTAR UTILITY PIPE

PART 1 - GENERAL

1.1 RELATED DOCUMENTS

A. Conditions of Contract, Division 01 Specification Sections, and Drawings apply to this Section.

1.2 SUMMARY

A. The Work of this Section includes providing centrifugally cast fiberglass reinforced polyester mortar type pipe, complete. Also referred to as Glass Reinforced Plastic (GRP).

B. Use for buried process pipe at WWTPs.

C. Related Requirements

a. Section C2 “Concrete for Structures” for concrete type for manhole base pad construction.
b. Section 036000 “Grouting” for non-shrink grout.
c. Section 310515 “Soils and Aggregates for Earthwork” for soils and aggregate for backfill in trenches.
d. Section 312000 “Earthwork” for product and execution requirements for excavation and backfill required by this Section.
e. Section 315000 “Excavation Support and Protection” for shoring design.
f. Section WW1 “Precast Manholes.”

1.3 DEFINITIONS

A. Bedding: Fill placed under, beside, and directly over pipe, prior to subsequent backfill operations.

1.4 COORDINATION

A. Section 013100 “Project Management and Coordination” specifies requirements for coordination.

B. Coordinate Work of this Section with lift station construction and yard piping work by others.

1.5 PREINSTALLATION MEETINGS

A. Section 013100 “Project Management and Coordination” specifies requirements for preinstallation meeting.

B. Convene minimum one week prior to commencing Work of this Section.

C. Pre-installation Conference: Conduct conference at Project site.

1.6 ACTION SUBMITTALS

A. Section 013300 “Submittal Procedures” for submittals requirements.

B. Design Submittals: Submit piping schedule and Drawings with design calculations and assumptions for custom fabrications.

C. Shop Drawings and Product Data:
   a. Product data including details, size, thickness, and length of pipe, joints, gasket, and grout bushings.
   b. Material properties and strength of pipe and gaskets.
   c. Manufacturer's certification that the proposed piping system, including internal resin liner and gasket material are appropriate for the intended service.
   d. Pipe design analysis in accordance with AWWA M-45, signed by a qualified engineer, as noted in Section 013300. If computer calculations are used, include example calculations to show the logic employed.
   e. Manufacturer's written instructions for handling transporting, storage, and installation of pipe.
   f. Test Reports: Submit reports from tests in accordance with ASTM D 3262, ASTM D 3681, and ASTM D 4161.
   g. Pipeline layout and profile drawings showing location, station, and invert elevation of pipe sections, fittings, closure pieces, and test closures.

1.7 INFORMATIONAL SUBMITTALS

A. Manufacturer's Certificate: Products meet or exceed specified requirements.

B. Manufacturer Instructions: Special procedures required to install specified products.

C. Prior to each shipment of pipe, submit certified test reports that the pipe for this Contract was manufactured and tested in accordance with the ISO, EN, or ASTM Standards specified herein.

D. Submit information on quality control testing including dimensional drawings of any mandrels or other ovality testing equipment.

E. Field Quality-Control Submittals: Results of Contractor-furnished tests and inspections.

1.8 CLOSEOUT SUBMITTALS

A. Section 017700 “Closeout Procedures” for closeout procedures requirements.

B. Project Record Documents: Record locations of pipe runs, connections, [cleanouts,] and invert elevations.

C. Identify and describe unexpected variations to subsoil conditions or discovery of uncharted utilities.

1.9 QUALITY ASSURANCE

A. Perform Work according to [standards set by authorities having jurisdiction].

B. Maintain a copy of each standard affecting Work of this Section on Site.

C. All pipes shall be subject to inspection at the place of manufacture. The Contractor shall notify the Engineer in writing of the manufacturing start date not less than 15 days prior to the start of manufacture.

D. Testing: Manufacturer shall furnish results from qualification tests of:

a. Pipe of the same dimensions and composition, in accordance with ASTM D 3262.
b. Joints of the same size and type, in accordance with ASTM D 4161.

1.10 QUALIFICATIONS

A. Manufacturer: Company specializing in manufacturing products specified in this Section with minimum five years' documented experience.

B. Installer: Company specializing in performing Work of this Section with minimum three years' documented experience and approved by manufacturer.

1.11 DELIVERY, STORAGE, AND HANDLING

A. Section 016000 “Product Requirements” for transporting, handling, storing, and protecting products requirements. Refer to specific pipe material sections for additional information.

B. Inspection: Accept materials on Site in manufacturer’s original packaging and inspect for damage.

C. Storage: Store materials according to manufacturer instructions.

D. Protection:

a. Protect materials from moisture and dust by storing in clean, dry location remote from construction operations areas.
b. Block individual and stockpiled pipe lengths to prevent moving.
c. Provide additional protection according to manufacturer instructions.
d. Protect materials from weather and UV exposure.

1.12 EXISTING CONDITIONS

A. Field Measurements:

a. Verify field measurements prior to fabrication.
b. Field verify fit-up to existing infrastructure prior to fabrication.
c. Document field measurements on Shop Drawings.

PART 2 - PRODUCTS

2.1 Centrifugally Cast Fiberglass Reinforced Polymer Mortar Pipe

A. Centrifugally Cast Fiberglass Reinforced Polymer Mortar Pipe per ISO 7370, EN 1796, or EN 14364.

B. Manufacturers: Provide pipe and fittings supplied by HOBAS Pipe USA as approved by the Engineer.

2.2 MATERIALS

A. Resin Systems: The manufacturer shall use only polyester resin systems with a proven history of satisfactory performance in the intended application for this project. The historical data shall be collected from applications of a composite material of similar construction and composition as the proposed product.

B. Glass Reinforcements: The reinforcing glass fibers used to manufacture the pipe and fittings shall be of highest quality commercial grade glass filaments with binder and sizing compatible with impregnating resins.

C. Fillers: Sand shall be minimum 98 percent silica, kiln dried and graded.

D. Additives: Resin additives, such as pigments, dyes, and other coloring agents, if used, shall in no way be detrimental to the performance of the product nor impair visual inspection of the finished products.

E. Rubber Gaskets: Gaskets shall be in accordance with ASTM F 477 and be suitable for the service intended. Gaskets shall either be affixed to the pipe by means of a suitable adhesive or shall be installed in such a manner so as to prevent the gasket from rolling out of the pre-cut groove.

F. The internal liner resin shall be suitable for sewer pipe service and shall be highly resistant to exposure to sulfuric acid as produced by biological activity from hydrogen sulfide gases. Pipe shall meet or exceed requirements of ASTM D 3681.

2.3 Pipe and Fittings

A. Pipe and fittings shall conform to ASTM D 3262 for gravity service, and shall be manufactured by a centrifugal casting process.

B. Diameters: Unless indicated otherwise, the nominal size and actual outside diameter of the pipes shall be in accordance with Table 3 of ASTM D 3262 or ISO 7370.

C. Lengths: The pipe standard length will be approximately 6 m. A maximum of 10 percent of the lengths, excluding special order pipes and pipes sampled for quality control testing, may be supplied in random lengths.

D. Wall Thickness: The minimum wall thickness shall be the indicated thickness. The minimum thickness at any single point shall not be less than 90 percent of the minimum

thickness. Walls shall not have stiffening ribs or rings. The maximum allowable diameter deflection shall be 3% of the outside diameter.

E. End Squareness: Pipe ends shall be square to the pipe axis.

F. Stiffness class of gravity pipe shall satisfy design requirements, but shall not be less than 36 psi when tested in accordance with ASTM D 2412.

2.4 Joints: Joints shall be sleeve couplings meeting the requirements of ASTM D 4161. Elastomeric gaskets shall be the sole means of achieving watertightness.

PART 3 - EXECUTION

3.1 EXAMINATION

A. Section 017000 "Execution and Closeout Requirements" for installation examination requirements.

B. Verify that excavation base is ready to receive Work.

C. Verify that excavations, dimensions, and elevations are as indicated on Drawings.

3.2 PREPARATION

A. Section 017000 "Execution and Closeout Requirements" for installation preparation requirements.

B. Correct over-excavation with fine aggregate.

C. Remove large stones or other hard materials that could damage pipe or impede consistent backfilling or compaction.

D. Protect and support existing sewer lines, utilities, and appurtenances.

E. Utilities:

a. Maintain profiles of utilities.
b. Coordinate with other utilities and existing and new yard piping to eliminate interference.
c. Notify the Engineer if crossing conflicts occur.

3.3 TRENCHING AND BACKFILL

A. Trench excavation and backfill shall conform to the requirements of Section 312000 – "Earthwork" and the Drawings.

3.4 LAYING PIPE

A. Pipe shall be installed in accordance with the requirements of ASTM D 2321 - Standard Practice for Underground Installation of Thermoplastic Pipe for Sewers and Other Gravity-Flow Applications and as indicated. Pipe sections shall be closely jointed to form a smooth flow line. Immediately before placing each section of pipe in final position for jointings, the bedding for the pipe shall be checked for firmness and uniformity of slope.

B. Handling

a. Handling of the pipe shall be done with implements, tools, and facilities as recommended by the pipe manufacturer to ensure that the pipe is not damaged in any manner during storage, transit, loading, unloading, and installation.
b. Pipe shall be inspected both prior to and after installation in the ditch and all defective lengths shall be rejected and immediately removed from the working area.
c. Fittings shall be lowered into trench by means of rope, cable, chain, or other means without damage. Cable, rope, or other devices used for lowering fitting into trench, shall be attached around exterior of fitting for handling. Under no circumstances shall the cable, rope, or other device be attached through the fitting interior for handling or shall pipe or fittings be dropped or dumped into the trench.

C. Cutting and machining of the pipe shall be accomplished in accordance with the pipe manufacturer's standard procedures. Pipe shall not be cut with a cold chisel, standard iron pipe cutter, nor any other method that may fracture the pipe or will produce ragged, uneven edges.

D. All foreign matter or dirt shall be removed from the interior of the pipe before lowering into position in the trench. Pipe shall be kept clean during and after laying. All openings in the pipeline shall be closed with water-tight expandable type sewer plugs or PVC test plugs at the end of each day's operation or whenever the pipe openings are left unattended. The use of burlap, wood, or other similar temporary plugs will not be permitted.

E. Adequate protection and maintenance of all underground and surface utility structures, drains, sewers, and other obstructions encountered in the progress of the Work shall be the Contractor’s responsibility.

F. Where the grade or alignment of the pipe is obstructed by existing utility structures such as conduits, ducts, pipes, branch connections to main sewers, or main drains, the obstruction shall be permanently supported, relocated, removed, or reconstructed by the Contractor in cooperation with owners of such utility structures. Unless otherwise indicated, protection of existing utility structures shall be the Contractor’s responsibility.

3.5 FIELD JOINTING

A. Each pipe compression type joint shall be joined with a lock-in rubber ring and a ring groove that is designed to resist displacement during pipe insertion.

B. The ring and the ring seat inside the bell shall be wiped clean before the gasket is inserted. A thin film of lubricant shall be applied to the exposed surface of the ring and to the outside of the clean pipe end. Lubricant other than that furnished with the pipe shall not be used. The end of the pipe shall be then forced into the ring to complete the joint.

C. The pipe shall not be deflected either vertically or horizontally in excess of the printed recommendations of the manufacturer of the coupling.

D. Fittings shall be carefully connected to pipe, and joint shall be checked to insure a sound and proper joint.

E. When pipe laying is not in progress, the open ends of the pipe shall be closed to prevent trench water from entering pipe. Adequate backfill shall be deposited on pipe to prevent floating of pipe. Any pipe which has floated shall be removed from the trench, cleaned, and re-laid in an acceptable manner. No pipe shall be laid when, in the opinion of the ENGINEER, the trench conditions or weather are unsuitable.

3.6 TESTING

A. Field testing of gravity sewer pipe shall conform to the Texas Commission on Environmental Quality requirements and CIP12 "Testing of Pipelines and Manholes."

3.7 PROTECTION

A. Section 017300 "Execution" for protecting finished Work requirements.

END OF SECTION 330537

©2024 CDM Smith
All Rights Reserved

This page intentionally left blank.

©2024 CDM Smith
All Rights Reserved

SECTION 333400 - SANITARY UTILITY SEWERAGE FORCE MAINS

PART 1 - GENERAL

1.1 RELATED DOCUMENTS

A. Drawings and general provisions of the Contract, including General and Supplementary Conditions and Division 01 Specification Sections, apply to this Section.

1.2 SUMMARY

A. Section Includes:

1. Force mains.
2. Bedding and cover materials.

B. Related Requirements:
1. Section C2 “Concrete for Structures” for concrete material requirements.
2. Section 310515 “Soils and Aggregates for Earthwork” for soil backfill from above pipe to finish grade.
3. Section CIP12 “Testing of Pipelines and Manholes” for pressure, infiltration, and deflection testing.
4. Section 330526 “Utility Identification” for pipe markers.
5. Section W1 “Ductile Iron Pipe and Fittings” for Ductile Iron pipe.
6. Section WW2 “PVC Wastewater Pipe” for PVC pipe.

1.3 ACTION SUBMITTALS

A. Product Data: Manufacturer information indicating pipe material used, pipe accessories, valves, joint fusion process

B. Shop Drawings:

1. Piping piece numbers and locations.
2. Restrained joint locations.

1.4 INFORMATIONAL SUBMITTALS

A. Manufacturer's Certificate: Products meet or exceed specified requirements.

B. Manufacturer Instructions: Special procedures required to install specified products.

C. Field Quality-Control Submittals: Results of Contractor-furnished tests and inspections.

D. Qualifications Statements:

1. Qualifications for manufacturer, installer, and licensed professional.
2. Manufacturer's approval of installer.

1.5 CLOSEOUT SUBMITTALS

A. Project Record Documents: Record invert elevations and actual location of pipe runs and connections.

B. Identify and describe unexpected variations to subsoil conditions or discovery of uncharted utilities.

1.6 QUALITY ASSURANCE

A. Design DIP restrained joints according to DIPRA standards.

B. Perform Work according to City of Georgetown standards

1.7 QUALIFICATIONS

A. Manufacturer: Company specializing in manufacturing products specified in this Section with minimum three years' experience.

B. Installer: Company specializing in performing Work of this Section with minimum five years' documented experience and approved by manufacturer.

C. Licensed Professional: Professional engineer experienced in design of specified Work and licensed in the State of Texas.

1.8 DELIVERY, STORAGE, AND HANDLING

A. Inspection: Accept materials on Site in manufacturer's original packaging and inspect for damage.

B. Storage:

1. Store materials according to manufacturer instructions.
2. Do not place materials on private property without written permission of property owner.
3. Do not stack pipe higher than recommended by pipe manufacturer.

C. Protection:

1. Protect materials from moisture and dust by storing in clean, dry location remote from construction operations areas.
2. Store gaskets for mechanical and push-on joints in cool and dry location, out of direct sunlight, and not in contact with petroleum products.
3. Provide additional protection according to manufacturer instructions.

1.9 EXISTING CONDITIONS

A. Field Measurements:

1. Verify field measurements prior to fabrication.
2. Indicate field measurements on Shop Drawings.

PART 2 - PRODUCTS

2.1 FORCE MAIN

A. Ductile-Iron Pipe:

1. Comply with AWWA C151 and AWWA C104.
2. Lining: Cement mortar, double thickness
3. Pressure Classes:

a. Sizes 3 to 12 Inches: 350 psig.
b. Sizes 14 to 20-Inches: 250 psig.

B. Ductile-Iron Fittings:

1. Comply with AWWA C153.
2. Pressure Rating: 250 psig.
3. Lining: Cement mortar, double thickness and outside coated.

C. Joints:

1. Comply with AWWA C111.
2. Type: Mechanical or push on.

D. Rubber Gaskets, Lubricants, Glands, Bolts, and Nuts: Comply with AWWA C111.

2.2 PVC PIPE

A. PVC Pressure Sewer Pipe and Fittings, 4- to 60 -Inch:

1. Comply with AWWA C900.
2. Class: 235 psi.
3. DR: 18.
4. Joints: restrained
5. Thrust Restraint: Thrust restraint devices shall be Mega-lug or approved equal and shall be factory tested and pressure rated in accordance with ASTM F1674.

2.3 MIXES

A. Concrete: As specified in Section C2 “Concrete for Structures.”

2.4 ACCESSORIES

A. Pipe Markers: As specified in Section 330526 “Utility Identification.”

PART 3 - EXECUTION

3.1 EXAMINATION

A. Verify that trench cut is ready to receive Work.

B. Verify that excavations, dimensions, and elevations are as indicated on Drawings.

3.2 PREPARATION

A. Correct over-excavation with TXDOT #57 stone.

B. Remove large stones or other hard matter capable of damaging pipe or of impeding consistent backfilling or compaction.

3.3 INSTALLATION

A. Bedding:

1. Excavate pipe trench as specified in Section G4 “Pipe Excavation Trenching, Embedment, Encasement and Backfilling” and Section 312000 “Earthwork”.
2. Place bedding material at trench bottom.,
3. Level materials in continuous layers not exceeding 6 inches in depth.
4. Maintain + 2 percent of optimum moisture content of bedding material to attain required compaction density.

B. Piping:

1. Install pipe, fittings, and accessories as indicated on Drawings.
2. Route piping in straight line.
3. Install bedding at sides and over top of pipe to minimum compacted thickness of 12 inches.
4. Backfilling and Compacting:

    a. As specified in Section G4 “Pipe Excavation Trenching, Embedment, Encasement and Backfilling” and Section 312000 “Earthwork”.
    b. Do not displace or damage pipe while compacting.

5. Pipe Markers: As specified in Section 330526 “Utility Identification."

C. Thrust Restraints:

1. Pressure pipeline with restrained joints or concrete thrust blocking at bends, tees, and changes in direction.

D. Cradles and Encasements for Pipelines: Where indicated on Drawings as specified in Section C2 "Concrete for Structures."

3.4 FIELD QUALITY CONTROL

A. Inspections: Request inspection by Engineer prior to and immediately after placing bedding.

B. Testing:

1. If tests indicate that Work does not meet specified requirements, remove Work, replace, and retest.
2. Pipe Testing:

   a. Pressure Test: As specified in Section CIP12 "Testing of Pipelines and Manholes."
   b. Infiltration Test: As specified in Section CIP12 "Testing of Pipelines and Manholes."
   c. Deflection Test: As specified in Section CIP12 "Testing of Pipelines and Manholes."

3. Compaction Testing:
   a. Comply with ASTM D698
   b. Testing Frequency: One density and water content test should be performed for every 100 linear feet of compacted utility trench backfill.

3.5 PROTECTION

A. Protect pipe and aggregate cover from damage or displacement until backfilling operation is in progress.

END OF SECTION 333400

©2024 CDM Smith
All Rights Reserved

This page intentionally left blank.

©2024 CDM Smith
All Rights Reserved

SECTION 400578.29 - COMBINATION AIR VALVES FOR WASTEWATER SERVICE

PART 1 - GENERAL

1.1 RELATED DOCUMENTS

A. Drawings and general provisions of the Contract, including General and Supplementary Conditions and Division 01 Specification Sections, apply to this Section.

1.2 SUMMARY

A. Section Includes: Combination air valves for wastewater treatment facilities.

1.3 RELATED DOCUMENTS

A. Drawings and general provisions of the Contract, including General and Supplementary Conditions and Division 01 Specification Sections, apply to this Section.

1.4 COORDINATION

A. Coordinate Work of this Section with installation of piping and manholes/structures.

1.5 ACTION SUBMITTALS

A. Section “Submittal Procedures”: Requirements for submittals.

B. Shop Drawings: Indicate materials, dimensions, weights, and end connections on assembly drawings.

1.6 INFORMATIONAL SUBMITTALS

A. Manufacturer's Certificate: Certify that products meet or exceed specified requirements.

B. Product Data: Submit manufacturer catalog information.

C. Manufacturer Instructions: Submit special procedures and setting dimensions.

D. Source Quality-Control Submittals: Indicate results of factory tests and inspections.

E. Field Quality-Control Submittals: Indicate results of Contractor-furnished tests and inspections and provide required certifications.

F. Manufacturer Reports: Certify that equipment has been installed according to manufacturer instructions.

G. Qualifications Statements:
   1. Submit qualifications for manufacturer and installer.
   2. Submit manufacturer's approval of installer.

1.7 CLOSEOUT SUBMITTALS

A. Project Record Documents: Record actual locations of combination air valves.

1.8 QUALITY ASSURANCE

A. Manufacturer Quality Management System: Certified to ISO 9001.

1.9 QUALIFICATIONS

A. Manufacturer: Company specializing in manufacturing products specified in this Section with minimum five years' documented experience.

1.10 DELIVERY, STORAGE, AND HANDLING

A. Inspection: Accept materials on Site in manufacturer's original packaging and inspect for damage.

B. Store materials according to manufacturer instructions.

C. Protection:

   1. Protect materials from moisture and dust by storing in clean, dry location remote from construction operations areas.
   2. Furnish temporary end caps and closures on piping and fittings and maintain in place until installation.
   3. Provide additional protection according to manufacturer instructions.

1.11 FIELD CONDITIONS

A. Field Measurements:

   1. Verify field measurements prior to fabrication.
   2. Indicate field measurements on Shop Drawings.

1.12 WARRANTY

A. Upon completion of installation (in accordance with approved installation manuals) and successful start-up and upon acceptance by the Owner; provide valve and appurtenance warranties in compliance with CIP 16, Warranty

PART 2 - PRODUCTS

2.1 COMBINATION AIR VALVES FOR WASTEWATER SERVICE – Tag Type CAV

A. Manufacturer:

1. 2-in or less: A.R.I. Model D-023 ST ST (NS)
2. 3-in or larger: Vent-O-Mat RGX

B. Description:

1. Type:

a. Fully automatic, float operated.
b. Body: Single.

2. Comply with AWWA C512.
3. Size: As indicated on Drawings.
4. Suitable for sewage service.
5. Provide with flushing capabilities.
6. Working Pressure: 85 psi
7. Rated Pressure: 150 psi
8. Combination air valves:

a. Perform the functions of an air/vacuum valve (exhaust large quantities of air on start-up or pipeline filling, admits air on shut-down or pipeline drainage) and air release valves (release air continuously during operation) to maintain system efficiency and prevent pipeline surges.

C. Materials:

1. Body and Cover: Stainless steel
2. Float: HDPE.
3. O-Rings and Nozzle Seat: EPDM.
4. Hardware: Stainless steel.

D. End Connections - Single Body:

1. Size 3 Inches and Smaller:

a. Threaded, NPT.
b. 1-Inch Valves: Furnish 2-inch inlet.

2. Backwash Accessories: Furnish two additional NPT connections.

E. Valve Body Connections:

1. Threaded, NPT.
2. Cleanout: 2 inches.
3. Drain: 1 inch.

F. Accessories:

1. Backwash accessories, including inlet shutoff valve, blowoff valve, rubber supply hose, and quick-disconnect couplings.
2. Furnish double acting throttling device set to 5% open with locking nut.

2.2 FINISHES

A. Prepare piping appurtenances for field finishes as specified in Section 099100 “Painting.”

2.3 SOURCE QUALITY CONTROL

A. Provide shop inspection and testing of completed assembly.

B. Certificate of Compliance:

1. If fabricator is approved by authorities having jurisdiction, submit certificate of compliance indicating Work performed at fabricator's facility conforms to Contract Documents.
2. Specified shop tests are not required for Work performed by approved fabricator.

PART 3 - EXECUTION

3.1 EXAMINATION

A. Verify that field dimensions are as indicated on Shop Drawings.

B. Inspect existing flanges for nonstandard bolt hole configurations or design and verify that new pipe and flanges mate properly.

3.2 PREPARATION

A. Thoroughly clean end connections before installation.

B. Close pipe and equipment openings with caps or plugs during installation.

C. Cleaning: Clean surfaces to remove foreign substances.

3.3 INSTALLATION

A. According to manufacturer’s instructions.

B. Provide access for operation, removal, and maintenance, and to avoid discharge to occupied areas or other equipment.

C. Vent valve properly and pipe outlet to nearest drain or as directed by Engineer.

3.4 FIELD QUALITY CONTROL

A. Inspect for interferences and proper supports.

B. Testing:
   1. Demonstrate operation without undue noise or vibration.

C. Manufacturer Services: Furnish services of manufacturer's representative experienced in installation of products furnished under this Section for not less than half a day (4 hour**s)** on Site for installation, inspection, startup, field testing, and instructing Owner's personnel in operation and maintenance of equipment.

D. Equipment Acceptance:

   1. Adjust, repair, modify, or replace components failing to perform as specified and rerun tests.
   2. Make final adjustments to equipment under direction of manufacturer's representative.
   3. Repair damaged coatings with material equal to original coating.

E. Furnish installation certificate from equipment manufacturer's representative attesting that equipment has been properly installed and is ready for startup and testing.

3.5 CLEANING

A. Keep interior of air release valves clean as installation progresses.

END OF SECTION 400578.29

This page intentionally left blank.

Lift Station/Force Main System Application

Texas Commission on Environmental Quality

for Regulated Activities On the Edwards Aquifer Recharge Zone and Relating to 30 TAC §213.5(c)(3)(B)and(c), Effective June 1, 1999

To ensure that the application is administratively complete, confirm that all fields in the form are complete, verify that all requested information is provided, consistently reference the same site and contact person in all forms in the application, and ensure forms are signed by the appropriate party.

Note: Including all the information requested in the form and attachments contributes to more streamlined technical reviews.

Regulated Entity Name: South Lake to South Fork Wastewater Improvements

Customer Information

(If different than customer information provided on core data form)

1. The person(s) responsible for providing the engineering certification to the TCEQ pursuant to 30 TAC §213.5(f)(2)(C) during construction and 30 TAC §213.5 (c)(3)(D) upon completion of construction is:

   Contact Person: Chris Pousson
   Entity: City of Georgetown
   Mailing Address: 300-1 Industrial Ave
   City, State: Georgetown, Texas Zip: 78626
   Telephone: (512) 930 - 8162 Fax: (512) 930 - 3559
   Email Address: chris.pousson@georgetown.org

2. The engineer responsible for the design of this lift station and force main:

   Contact Person: Gerald S. Furrier
   Entity: CDM Smith, Inc.
   Mailing Address: 8310-1 N Capital of Texas Hwy, Suite 250
   City, State: Austin, Texas Zip: 78731
   Telephone: (713) 423 - 7337 Fax: _____
   Email Address: furrierg@cdmsmith.com
   Texas Licensed Professional Engineer's Serial Number: 129811

Project Information

3. This project is for the construction or replacement of:

   ☐ Lift Station only.

☐ Lift Station and Force Main system.
☒ Lift Station, Force Main, and Gravity system.

4. The sewage collection system will convey the wastewater to the San Gabriel Wastewater (name) Treatment Plant. The treatment facility is:

   ☒ Existing
   ☐ Proposed

5. All components of this lift station/force main system will comply with:

   ☒ The City of Georgetown standard specifications.
   ☒ Other. Specifications are attached.

Site Plan Requirements

Items 6-14 must be included on the Site Plan.

6. ☒ The Site Plan must have a minimum scale of 1" = 400'.

   Site Plan Scale: 1" = 20'.

7. ☒ Lift station/force main system layout meets all requirements of 30 TAC Chapter 217.

8. Geologic or Manmade Features:

   ☐ No geologic or manmade features were identified in the Geologic Assessment.
   ☒ All geologic or manmade features identified in the Geologic Assessment (caves, solution openings, sinkholes, fractures, joints, porous zones, etc.) which exist at the site of the proposed lift station and along the path(s) or within **50 feet of each side** of a proposed force main line are shown on the Site Plan and are listed in the table below. Designs used to protect the integrity of the sewer line crossing each feature are described and labeled on the attached page. A detailed design drawing for each feature is shown on Plan Sheet _____ of _____.
   ☐ No Geologic Assessment is required for this project.

Table 1 - Geologic or Manmade Features

Line	*Station to Station*	*Type of Feature*
See table below	to	
	to	
	to	
	to	
	to	
	to	
	to	
	to	

Table 1 - Geologic or Manmade Features

Feature ID	Line	Station to Station	Type of Feature	Sensitive or Non-sensitive
F-06	12" FM	185+00 to 186+00	Solution-enlarged fracture	Non-sensitive
F-18	15" WW	167+00 to 168+00	Solution cavity	Non-sensitive
F-19	15" WW	168+00 to 169+00	Solution cavity	Non-sensitive
F-30	36" WW	129+42 to 130+00	Solution cavity	Non-sensitive
F-43	15" WW	217+00 to 218+00	Sinkhole	Sensitive
MBN-02	15" WW	208+00 to 209+00	Manmade feature in bedrock - pipe	Non-sensitive
MBN-04	24" WW	82+00 to 83+00	Manmade feature in bedrock - pipe	Sensitive
MBS-01	30" WW	73+00 to 74+00	Manmade feature in bedrock - pipe	Non-sensitive
MBS-02	30" WW	51+00 to 52+00	Manmade feature in bedrock - pipe	Sensitive
SI-04	30" WW	59+00 to 60+00	Cave	Sensitive
SI-06	30" WW	48+00 to 49+00	Other natural bedrock features	Non-sensitive

There are no sensitive geological features present within 50-feet of the proposed lift station sites, force main, or gravity line. The proposed improvements maintain more than 140 ft of buffer from any geological features present at the site.

Table 1 - Geologic or Manmade Features

Feature ID	Line	Station to Station	Type of Feature
F-06	12" FM	185+00 to 186+00	Solution-enlarged fracture
F-19	12" FM	181+00 to 182+00	Solution cavity
F-30	36" WW	129+42 to 130+00	Solution cavity
F-66	18" FM	105+00 to 106+00	Sinkhole
MBN-02	15" WW	208+00 to 209+00	Manmade feature in bedrock - pipe
MBN-04	24" WW	82+00 to 83+00	Manmade feature in bedrock - pipe
MBS-01	30" WW	73+00 to 74+00	Manmade feature in bedrock - pipe
MBS-02	30" WW	51+00 to 52+00	Manmade feature in bedrock - pipe
SI-01	24" WW	80+00 to 81+00	Solution cavity
SI-06	30" WW	48+00 to 49+00	Other natural bedrock features

9. ☒ Existing topographic contours are shown and labeled. The contour interval is one feet. (Contour interval must not be greater than 5 feet).

10. ☒ Finished topographic contours are shown and labeled. The contour interval is one feet. (Contour interval must not be greater than 5 feet).

☐ Finished topographic contours will not differ from the existing topographic configuration and are not shown.

11. 100-year floodplain boundaries

☒ Some part(s) of the project site is located within the 100-year floodplain. The floodplain is shown and labeled.
☐ No part of the project site is located within the 100-year floodplain.

The 100-year floodplain boundaries are based on the following specific (including date of material) sources(s): Panel 48491C0290E effective 09/26/2008 from the FEMA Floodplain Maps

12. 5-year floodplain:

☐ After construction is complete, no part of this project will be in or cross a 5-year floodplain, either naturally occurring or manmade. (Do not include streets or concrete-lined channels constructed above sewer lines.)
☒ After construction is complete, all sections of the force main located within the 5-year floodplain will be encased in concrete or capped with concrete. These locations are listed in the table below and are shown and labeled on the Site Plan. (Do not include streets or concrete-lined channels constructed above sewer lines.)

Table 2 - 5-Year Floodplain

Line	***Sheet***	***Station to Station***
18" FM	C-15 of C-33	119+50 to 120+00
12" FM	C-27 of C-33	190+30 to 191+23
	of	to
	of	to

13. All known wells (oil, water, unplugged, capped and/or abandoned, test holes, etc.):

If applicable, this must agree with Item No. 15 on the Geologic Assessment Form.

☐ There are _____ (#) wells present on the project site and the locations are shown and labeled. (Check all of the following that apply)

☐ The wells are not in use and have been properly plugged.
☐ The wells are not in use and will be properly plugged.
☐ The wells are in use and comply with 16 TAC Chapter 76.

☒ There are no wells or test holes of any kind known to exist on the project site.

14. ☒ Legal boundaries of the site are shown.

Plan and Profile Sheets

*The construction drawings and technical specifications will not be considered for review unless they are the **final plans and technical specifications** which will be used by the contractor for bidding and construction.*

Items 15 – 18 must be included on the Plan and Profile sheets.

15. ☒ The equipment installation construction plans must have a minimum scale of 1" = 10'.

    Plan sheet scale: 1" = 20 '. Lift Station Plans- 1"=20', WW Plan and profile 1"=40'

16. ☒ Locations, descriptions and elevations of all required equipment and piping for the lift station and force main are shown and labeled.

17. ☒ Air Release/Vacuum Valves will be provided at all peaks in elevation of the proposed force main. These locations are listed in the table below and labeled on the appropriate plan and profile sheets.

Table 3 - Air Release/Vacuum Valves

Line	*Station*	*Sheet*
See following sheet		of
		of
		of
		of
		of
		of

18. ☒ The **final plans and technical specifications** are submitted for the TCEQ's review. Each sheet of the construction plans and specifications are dated, signed, and sealed by the Texas Licensed Professional Engineer responsible for the design on each sheet.

19. ☒ **Attachment A - Engineering Design Report**. An engineering design report with the following required items is attached:

    - ☒ The report is dated, signed, and sealed by a Texas Licensed Professional Engineer.
    - ☒ Calculations for sizing system.
    - ☒ Pump head calculations, including, but not limited to, system head and pump capacity curves, head loss calculations, and minimum and maximum static head C values for normal and peak operational conditions.
    - ☒ 100-year and 25-year flood considerations.
    - ☒ Total lift station pumping capacity with the largest pump out of service.
    - ☒ Type of pumps, including standby units.

Table 3 - Air Release/Vacuum Valves

Line	Station	Sheet
18" FM	103+50	C-13
18" FM	109+13/15	C-14
18" FM	121+64	C-15
18" FM	141+15	C-18
18" FM	147+25	C-19
12" FM	185+85	C-26
12" FM	189+80	C-27

- ☒ Type of pump controllers, including standby air supply for bubbler controllers, as applicable.
- ☒ Pump cycle time.
- ☒ Type of wet well ventilation; include number of air changes for mechanical ventilation.
- ☒ Minimum and maximum flow velocities for the force main.
- ☒ Lift station security.
- ☒ Lift station emergency provisions and reliability.

Administrative Information

20. ☒ Upon completion of the wet well excavation, a geologist must certify that the excavation was inspected for the presence of sensitive features and submit the signed, sealed, and dated certification to the appropriate regional office.

21. ☒ The TCEQ Lift Stations and Force Mains General Construction Notes (TCEQ-0591) are included on the General Notes Sheet of the Final Construction Plans for this lift station and/or force main system.

22. ☒ Submit one (1) original and one (1) copy of the application, plus additional copies as needed for each affected incorporated city, groundwater conservation district, and county in which the project will be located. The TCEQ will distribute the additional copies to these jurisdictions. The copies must be submitted to the appropriate regional office.

23. ☒ Any modification of this lift station/force main system application will require TCEQ approval, prior to construction, and may require submission of a revised application, with appropriate fees.

Signature

To the best of my knowledge, the responses to this form accurately reflect all information requested concerning the proposed regulated activities and methods to protect the Edwards Aquifer. This **Lift Station/Force Main System Application** is hereby submitted for TCEQ review and executive director approval. The system was designed in accordance with the requirements of 30 TAC §213.5(c)(3)(C) and 30 TAC Chapter 217, and prepared by:

Print Name of Licensed Professional Engineer: Gerald S Furrier

Place engineer's seal here:

Date: 06/13/24

Signature of Licensed Professional Engineer:

Site Plan

Cedar Breaks and D B Wood Lift Station
Georgetown, TX

GEORGETOWN
TEXAS
more than welcome

CITY OF GEORGETOWN, TEXAS

CEDAR BREAKS AND D B WOOD LIFT STATIONS

PROJECT NO. PRJ000101

BID NO. 202409 CONTRACT ID NO. 24-0050-CIP

DECEMBER 2023

CITY COUNCIL

MAYOR
JOSH SCHROEDER

CITY COUNCIL MEMBERS

AMANDA PARR	DISTRICT 1
SHAWN HOOD	DISTRICT 2
MIKE TRIGGS	DISTRICT 3
RON GARLAND	DISTRICT 4
KEVIN PITTS	MAYOR PRO TEM / DISTRICT 5
JAKE FRENCH	DISTRICT 6
BEN STEWART	DISTRICT 7

CITY MANAGER
DAVID MORGAN

ASSISTANT CITY MANAGER
LAURIE BREWER
WAYNE NERO
NICK WOOLERY

WATER SERVICES UTILITY DIRECTOR
CHELSEA SOLOMON, P.E.

SYSTEMS ENGINEERING DIRECTOR
WESLEY WRIGHT, P.E.

UTILITY ENGINEER
DAVID MUNK, P.E.

N

LOCATION PLAN
NTS

CDM Smith
AUSTIN, TEXAS

CITY OF GEORGETOWN, CIP MANAGER — DATE 12-13-23

CITY OF GEORGETOWN, SYSTEM ENGINEERING DIRECTOR — For Wesley Wright — DATE 12/14/2023

CITY OF GEORGETOWN, WATER UTILITY DIRECTOR — DATE 12-14-23

STATE OF TEXAS
GERALD S. FURRIER
129811
LICENSED
PROFESSIONAL ENGINEER

PREPARED BY:

CDM Smith
TEXAS REGISTRATION NUMBER F-3043 — DATE 12/14/2023

Water ***Environment*** ***Transportation*** ***Energy*** ***Facilities***

SHEET INDEX

SL.NO.	SHEET NUMBER	SHEET TITLE
GENERAL		
1	G-0	COVER SHEET
2	G-1	SHEET INDEX
3	G-2	LEGEND AND NOTES
4	G-3	GENERAL NOTES AND ABBREVIATIONS
5	G-4	STANDARD TCEQ GENERAL CONSTRUCTION NOTES I
6	G-5	STANDARD TCEQ GENERAL CONSTRUCTION NOTES II
7	G-6	HORIZONTAL CONTROLS PLAN
8	G-7	CEDAR BREAKS LIFT STATION AREA CLASSIFICATION PLAN AND BUILDING MATERIALS OF CONSTRUCTION
9	G-8	D B WOOD LIFT STATION AREA CLASSIFICATION PLAN AND BUILDING MATERIALS OF CONSTRUCTION
CIVIL		
10	C-1	OVERALL SITE PLAN
11	C-2	CEDAR BREAKS LIFT STATION SITE PLAN
12	C-3	D B WOOD LIFT STATION SITE PLAN
13	C-4	CEDAR BREAKS LIFT STATION TEMPORARY AND PERMANENT EROSION AND SEDIMENTATION CONTROL PLAN
14	C-5	D B WOOD LIFT STATION TEMPORARY AND PERMANENT EROSION AND SEDIMENTATION CONTROL PLAN
15	C-6	CEDAR BREAKS LIFT STATION YARD PIPING PLAN
16	C-7	D B WOOD LIFT STATION YARD PIPING PLAN
17	C-8	CEDAR BREAKS LIFT STATION YARD PIPING PROFILE
18	C-9	D B WOOD LIFT STATION YARD PIPING PROFILE
19	C-10	CEDAR BREAKS LIFT STATION PAVING AND GRADING PLAN
20	C-11	D B WOOD LIFT STATION PAVING AND GRADING PLAN
21	C-12	D B WOOD LIFT STATION PAVING PLAN AND PROFILE
22	CD-1	CIVIL STANDARD DETAILS I
23	CD-2	CIVIL STANDARD DETAILS II
24	CD-3	CIVIL STANDARD DETAILS III
25	CD-4	CIVIL STANDARD DETAILS IV
26	CD-5	CIVIL STANDARD DETAILS V
27	CD-6	CIVIL STANDARD DETAILS VI
28	CD-7	CIVIL STANDARD DETAILS VII
29	CD-8	CIVIL STANDARD DETAILS VIII
30	CD-9	CIVIL STANDARD DETAILS IX
31	CD-10	VOID MITIGATION DETAILS
32	CD-11	TRAFFIC CONTROL DETAILS I
33	CD-12	TRAFFIC CONTROL DETAILS II
STRUCTURAL		
34	S-1	STRUCTURAL GENERAL NOTES, ABBREVIATIONS, AND LEGEND
35	S-2	STRUCTURAL SPECIAL INSPECTIONS
36	S-3	CEDAR BREAKS LIFT STATION FOUNDATION AND TOP PLANS
37	S-4	CEDAR BREAKS LIFT STATION SECTIONS
38	S-5	CEDAR BREAKS GENERATOR PAD PLAN AND SECTION
39	S-6	D B WOOD LIFT STATION FOUNDATION AND TOP PLANS
40	S-7	D B WOOD LIFT SECTION I
41	S-8	D B WOOD LIFT SECTIONS AND DETAIL
42	S-9	D B WOOD GENERATOR AND E-HOUSE PAD PLANS AND SECTIONS
43	SD-1	STRUCTURAL STANDARD DETAILS I
44	SD-2	STRUCTURAL STANDARD DETAILS II
45	SD-3	STRUCTURAL STANDARD DETAILS III
MECHANICAL		
46	M-1	MECHANICAL LEGEND
47	M-2	MECHANICAL CEDAR BREAKS LIFT STATION UPPER PLAN AND LOWER PLAN
48	M-3	MECHANICAL CEDAR BREAKS LIFT STATION SECTIONS
49	M-4	MECHANICAL D B WOOD LIFT STATION UPPER PLAN AND LOWER PLAN
50	M-5	MECHANICAL D B WOOD LIFT STATION SECTIONS
51	MD-1	MECHANICAL STANDARD DETAILS I
52	MD-2	MECHANICAL STANDARD DETAILS II
53	MD-3	MECHANICAL STATNDARD DETAILS III
ELECTRICAL		
54	E-1	ELECTRICAL SYMBOLS, LEGENDS AND ABBREVIATIONS I
55	E-2	ELECTRICAL SYMBOLS, LEGENDS AND ABBREVIATIONS II
56	E-3	CEDAR BREAKS AND D B WOOD AREA CLASSIFICATION PLAN
57	E-4	CEDAR BREAKS LIFT STATION ELECTRICAL SITE PLAN
58	E-5	D B WOOD LIFT STATION ELECTRICAL SITE PLAN
59	E-6	CEDAR BREAKS LIFT STATION MOTOR CONTROL CENTER MCC-CB ONE-LINE DIAGRAM AND ELEVATION
60	E-7	D B WOOD LIFT STATION MOTOR CONTROL CENTER MCC-DB ONE-LINE DIAGRAM AND ELEVATION
61	E-8	CEDAR BREAKS AND D B WOOD LIFT STATION PANEL BOARD AND LIGHT FIXTURE SCHEDULE
62	E-9	CEDAR BREAKS LIFT STATION ELECTRICAL SITE GROUNDING
63	E-10	CEDAR BREAKS LIFT STATION ELECTRICAL PLAN
64	E-11	D B WOOD LIFT STATION E-HOUSE AND GENERATOR POWER AND GROUNDING PLAN
65	E-12	D B LIFT STATION ELECTRICAL PLAN
66	E-13	CEDAR BREAKS LS SCHEMATIC I AND RISER DIAGRAM
67	E-14	CEDAR BREAKS LS SCHEMATIC II
68	E-15	CEDAR BREAKS LS SCHEMATIC III
69	E-16	D B WOOD LS SCHEMATIC I AND RISER DIAGRAM
70	E-17	D B WOOD LS SCHEMATIC II
71	E-18	D B WOOD LS SCHEMATIC III
72	E-19	CEDAR BREAKS EST EXISTING ELEVATION STORAGE TANK PLAN AND ELEVATION
73	EZ-1	ELECTRICAL STANDARD DETAILS I
74	EZ-2	ELECTRICAL STANDARD DETAILS II
INSTRUMENTATION		
75	I-1	INSTRUMENTATION LEGEND I NOTES AND ABBREVIATIONS
76	I-2	INSTRUMENTATION LEGEND II NOTES AND ABBREVIATIONS
77	I-3	SCADA SYSTEM ARCHITECTURE
78	I-4	CEDAR BREAKS LIFT STATION PROCESS AND INSTRUMENTATION DIAGRAM
79	I-5	D B WOOD LIFT STATION PROCESS AND INSTRUMENTATION DIAGRAM
80	IZ-1	INSTRUMENTATION INSTALLATION DETAILS I
81	IZ-2	INSTRUMENTATION INSTALLATION DETAILS II
82	IZ-3	INSTRUMENTATION INSTALLATION DETAILS III

STATE OF TEXAS
GERALD S. FURRIER
129811
LICENSED
PROFESSIONAL ENGINEER
12/11/2023

REV. NO.	DATE	DRWN	CHKD	REMARKS

DESIGNED BY: A. KAJALE
DRAWN BY: S. DHANGAR
SHEET CHK'D BY: M. MAHADEVAN
CROSS CHK'D BY: A. RHAMES
APPROVED BY: G. FURRIER
DATE: DECEMBER 2023

CDM Smith
8310-1 N Capital of Texas Hwy, Suite 250
Austin, TX 78731
Tel: (512) 346-1100
TBPELS Firm Registration No. F-3043

CITY OF GEORGETOWN, TEXAS

CEDAR BREAKS AND D B WOOD LIFT STATIONS

SHEET INDEX

PROJECT NO. 2048-272644
FILE NAME: G001INDX.dwg
SHEET NO.
G-1

xREFs: [REVW_STAMP, CDMS_2234_South lake to South fork_Border] Images: []
Last saved by: UZ2, Time: 12/14/2023 1:30:24 PM
C:\pw_pt\Uz2\3892778\G001INDX.dwg
© 2023 CDM SMITH ALL RIGHTS RESERVED.
REUSE OF DOCUMENTS: THESE DOCUMENTS AND DESIGNS PROVIDED BY PROFESSIONAL SERVICE, INCORPORATED HEREIN, ARE THE PROPERTY OF CDM SMITH AND ARE NOT TO BE USED, IN WHOLE OR PART, FOR ANY OTHER PROJECT WITHOUT THE WRITTEN AUTHORIZATION OF CDM SMITH.

Plotted: 12/14/2023 2:00:05 PM

LANDSCAPE & DRAINAGE SYMBOLS

SYMBOL	FEATURE
	BUILDING OR STRUCTURE FOOTPRINT
4" OAK	TREE, SIZE & TYPE
	TREE PROTECTION
	TREE TO BE REMOVED
	EDGE OF WOODS OR BRUSH
	DIRECTION OF FLOW FOR STORMWATER
SF SF	SILT FENCE
RB	ROCK BERM
	EROSION CONTROL BLANKET
SCE	STABILIZED CONSTRUCTION ENTRANCE

SURFACE ELEVATION SYMBOLS

SYMBOL	FEATURE
84	DEPRESSION CONTOUR
84	EXISTING INTERMEDIATE CONTOUR LINE & ELEVATION DESIGNATION
85	EXISTING INDEX CONTOUR LINE & ELEVATION DESIGNATION
84	PROPOSED INTERMEDIATE CONTOUR LINE & ELEVATION DESIGNATION
85	PROPOSED INDEX CONTOUR LINE & ELEVATION DESIGNATION
365.7	SPOT ELEVATION
	EXISTING EMBANKMENT (REVERSE SYMBOLS FOR CHANNEL)
	PROPOSED EMBANKMENT (REVERSE SYMBOLS FOR CHANNEL)

UNDERGROUND/OVERHEAD UTILITY SYMBOLS

SYMBOL	FEATURE
MH–14 WEST IE 27.35 EAST IE 32.50 / 8" WW	WASTEWATER & MANHOLE
MH–22 EAST IE 32.75 WEST IE 32.50 / 8" SD	STORM DRAIN & MANHOLE
W / FH	WATER LINE W/FIRE HYDRANT ASSEMBLY (INCLUDES VALVE)
ELEC	ELECTRICAL CABLE/DUCT
OE	OVERHEAD ELECTRIC
TEL	TELEPHONE
OT	OVERHEAD TELEPHONE
G	GAS LINE
LP	LIGHT POLE
PP GW	POWER POLE W/GUY WIRE

ITEMS TO BE REMOVED / ITEMS TO BE DEMOLISHED

TRAVELED WAY SYMBOLS

SYMBOL	FEATURE
	UNIMPROVED DIRT ROAD OR GRAVELED ROAD
	PAVED ROAD

EXISTING OR FUTURE CONDITION DESIGNATION

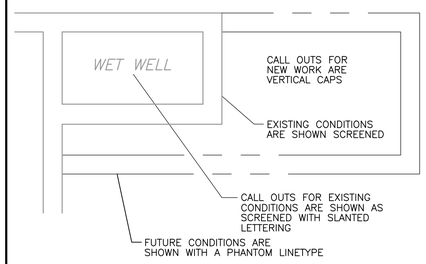

SECTION CUT SYMBOLS

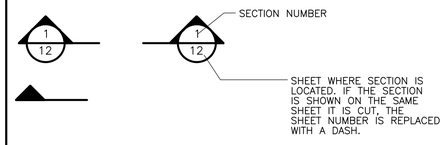

DETAIL CALL OUT SYMBOLS

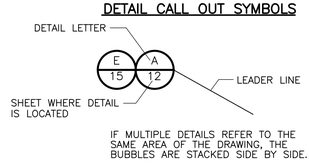

DRAWING, SECTION & DETAIL TITLES

SUBTITLE OR DESCRIPTION (AS REQ'D)

PLAN
1/4" = 1'–0"

SUBTITLE OR DESCRIPTION (AS REQ'D)

ELEVATION
1/4" = 1'–0"

SECTION 1 / 6 — 3/4" = 1'–0"
- SECTION NUMBER
- SHEET WHERE SECTION CUT IS TAKEN *

DETAIL A / 3 — 3/4" = 1'–0"
- DETAIL LETTER
- SHEET WHERE DETAIL IS TAKEN *

* IF SECTION, DETAIL, SCHEMATIC OR DIAGRAM IS DRAWN ON THE SAME SHEET THAT IT IS TAKEN FROM, THE SHEET NUMBER IS REPLACED WITH A HYPHEN. IF THE SECTION IS REFERENCED ON MULTIPLE SHEETS, THE SHEET NUMBER SHOWN INDICATES THE FIRST SHEET THE SECTION IS TAKEN FROM.

BOUNDARY & MARKER SYMBOLS

SYMBOL	FEATURE
	PROPERTY BOUNDARY
x x x	FENCE
	FENCECRETE
TCE	TEMPORARY CONSTRUCTION EASEMENT
PEL	PERMANENT EASEMENT LIMIT
B–7	BORING
BM 8	BENCHMARK

MB–2
- DISCIPLINE
- AREA CODE
- SEQUENTIAL SHEET NUMBER

G	GENERAL	D	STANDARD DETAILS
C	CIVIL		
E	ELECTRICAL		
M	PROCESS MECHANICAL		
S	STRUCTURAL		
H	HVAC		
A	ARCHITECTURAL		

GENERAL NOTES:

SAFETY

1. TRENCH SAFETY SHALL BE IN ACCORDANCE WITH OCCUPATIONAL SAFETY AND HEALTH ADMINISTRATION CFR 29, PART 1926–SAFETY REGULATIONS FOR CONSTRUCTION, SUBPART P – EXCAVATIONS AND THE STATE OF TEXAS. EXCAVATION ACTIVITIES SHALL NOT COMMENCE PRIOR TO SUBMITTAL OF THE TRENCH SAFETY PLAN PER SPECIFICATION S.I
2. COORDINATE AND PERFORM All WORK IN THE VICINITY OF HIGH VOLTAGE ELECTRIC POWER LINES IN ACCORDANCE WITH APPLICABLE TEXAS STATUES AND REQUIREMENTS OF THE ELECTRIC UTILITY OWNER.

NOTICES FOR JURISDICTIONAL AUTHORITIES:

1. NOTIFY CITY OF GEORGETOWN PROJECT MANAGER, MR. DANIEL HAVINS, 512–930–6513 AT LEAST 48 HOURS PRIOR TO THE BEGINNING OF CONSTRUCTION WORK.
2. OWNER, ENGINEER, AND CONTRACTOR SHALL ATTEND PRE–CONSTRUCTION CONFERENCE PRIOR TO THE START OF CONSTRUCTION. SCHEDULE THE PRE–CONSTRCUTION CONFERENCE AT LEAST 48–HOURS IN ADVANCE OF THE MEETING.
3. PORTIONS OF THE CONSTRUCTION OF THIS PROJECT WILL BE SUBJECT TO SUCH INSPECTION AND TESTS AS MAY BE DEEMED NECESSARY BY THE OWNER OR PERMIT GRANTING AUTHORITIES. FURNISH INFORMATION TO AUTHORITIES AS REQUIRED, AS WELL AS INCIDENTAL LABOR AND EQUIPMENT TO ALLOW TESTING PERSONNEL TO ACCESS THE WORK AND COOPERATE FULLY WITH THESE AUTHORITIES IN CONDUCTING THE TESTING AND INSPECTION PROGRAM. UNLESS STATED OTHERWISE IN THE PLANS OR PROJECT MANUAL, COSTS OF TESTING WILL BE AS SPECIFIED IN SECTION 00 70 00 – GENERAL CONDITIONS AND SECTION 01 41 00 –TESTING AND TESTING LABORATORY SERVICES.
4. NOTIFY THE AUTHORITY HAVING JURISDICTION PRIOR TO THE INSTALLATION OF ANY FACILITY WITHIN A DRAINAGE EASEMENT OR STREET R.O.W. THE METHODS OF PLACEMENT AND COMPACTION OF BACKFILL IN THE PUBLIC R.O.W. MUST BE APPROVED PRIOR TO START OF THE BACKFILL OPERATION.
   - A. CITY OF GEORGETOWN UTILITIES – 512–930–3555 OR 512–930–3640.
   - B. CITY OF GEORGETOWN STREETS AND TRANSPORTATION –512–930–8152.
   - C. CITY OF GEORGETOWN ELECTRIC ENGINEERING – 512–930–3555 OR 512–930–3640.
   - D. PEDERNALES ELECTRIC COOPERATIVE – 877–372–0391
   - E. FRONTIER – 512–869–2231
   - F. TEXAS ONE CALL – 811 OR 800–344–8377
5. ARRANGE OPERATIONS TO AVOID UNNECESSARY IMPACTS TO THE PUBLIC IN CONSTRUCTION AREAS.

PROTECTION OF EXISTING UTILITIES

1. THE INFORMATION SHOWN ON THE DRAWINGS INDICATING TYPE AND LOCATION OF UNDERGROUND, SURFACE, AND AERIAL UTILITIES IS NOT GUARANTEED TO BE EXACT OR COMPLETE. UTILITIES SHOWN REFLECT THE BEST INFORMATION AVAILABLE AT THE TIME THE PROJECT WAS DESIGNED/SURVEYED. DETERMINE THE EXACT TYPE AND LOCATION OF ALL UTILITIES AFFECTED BY CONSTRUCTION TO AVOID DAMAGING UTILITY. CONTACT THE "ONE CALL" SYSTEM AT 811 OR 1–800–545–6005 48 HOURS PRIOR TO BEGINNING ANY EXCAVATION AND SUBMIT ONE CALL CENTER CONFIRMATION NUMBER TO THE INSPECTOR.
2. CONTACT UTILITY OWNERS AND 811 "ONE CALL" SYSTEM TO PERFORM FIELD LOCATES OF UTILITIES 48 HOURS PRIOR TO BEGINNING ANY EXCAVATION.
3. IMMEDIATELY NOTIFY THE UTILITY OWNER OF DAMAGE TO UTILITIES. REPAIR OR CAUSE REPAIR OF DAMAGED UTILITIES AT NO ADDITIONAL COST TO THE OWNER.
4. EXPLORE AHEAD OF TRENCHING AND EXCAVATION WORK AND UNCOVER OBSTRUCTING UNDERGROUND FACILITIES SUFFICIENTLY TO DETERMINE THEIR LOCATION. NOTIFY THE OWNER AND ENGINEER IMMEDIATELY OF ANY POTENTIAL CONFLICT BETWEEN THE WORK AND ANY EXISTING UNDERGROUND FACILITIES.
5. NOTIFY THE INSPECTOR IMMEDIATELY IF AN EXISTING UTILITY IS IN CONFLICT WITH THE PROPOSED CONSTRUCTION. BEFORE DISCONNECTING ANY UTILITY SERVICE LINE, PROVIDE AN ALTERNATE MEANS OF SERVICE FOR THE INTERRUPTED SECTION. ANY DAMAGE RESULTING FROM BACKFLOW OF WASTEWATER SHALL BE REPAIRED AT NO ADDITIONAL COST TO THE OWNER.
6. REIMBURSE THE OWNER FOR ALL COSTS INCURRED AS A RESULT OF ANY DAMAGE TO OWNER'S EXISTING UTILITIES.
7. MAINTAIN ADEQUATE DRAINAGE CONDITIONS AT ALL TIMES IN ACCORDANCE WITH THE WILLIAMSON COUNTY AND THE CITY OF GEORGETOWN DRAINAGE CRITERIA MANUAL.

PROTECTION OF PRIVATE PROPERTY

1. PROVIDE AND MAINTAIN SAFETY FENCING ALONG THE RIGHT OF WAY (ROW) LINE BETWEEN ALL DRIVEWAYS ADJACENT TO THE CONSTRUCTION AREA. SAFETY FENCING IS REQUIRED ALONG ANY EXCAVATION AREAS, ANY CONSTRUCTION AREAS SPECIFICALLY IDENTIFIED ON THE PLANS, AND AREAS IDENTIFIED BY THE ENGINEER BASED ON SITE SPECIFIC CONDITIONS. PROVIDE SAFETY FENCING AROUND PERIMETER OF EXCAVATION ACTIVITIES WHEN LIVESTOCK IS PRESENT.
2. NO HUNTING, FISHING OR RECREATION OF ANY SORT IS ALLOWABLE WITHIN THE PROJECT PROPERTY.

TRAFFIC CONTROL AND PEDESTRIAN

1. ACCESS TO ALL SIDE STREETS AND DRIVEWAYS SHALL BE MAINTAINED AT ALL TIMES AT THE SOLE EXPENSE OF THE CONTRACTOR UNLESS OTHERWISE DIRECTED BY THE OWNER. COORDINATE WITH AFFECTED LANDOWNERS WHEN TEMPORARY DRIVEWAY ACCESS RESTRICTIONS ARE REQUIRED AND COORDINATE ALTERNATE MEANS OF INGRESS AND EGRESS AS REQUIRED.
2. FURNISH, INSTALL, AND MAINTAIN BARRICADES, WARNING SIGNS, FLASHERS AND OTHER TRAFFIC AND PEDESTRIAN CONTROL DEVICES OF THE TYPE AND SIZE AS INDICATED IN THE SUBMITTED TRAFFIC CONTROL PLANS. TRAFFIC CONTROL PLAN SHALL ADHERE TO THE REQUIREMENTS OF THE LATEST EDITION OF THE "TEXAS MANUAL ON UNIFORM TRAFFIC CONTROL DEVICES (MUTCD)."

CONSTRUCTION METHODS

1. MAINTAIN A SAFE, NEAT, AND ORDERLY JOB SITE AT ALL TIMES IN ACCORDANCE WITH SECTION 00700 – GENERAL CONDITIONS.
2. BURNING WITHIN THE PROJECT AREA WILL NOT BE ALLOWED.
3. CONTROLLED BLASTING WILL BE PERMITTED IF THE CONTRACTOR OBTAINS PERMIT FROM FEDERAL, STATE, OR LOCAL AGENCIES HAVING JURISDICTION.
4. PROTECT AND/OR RESTORE ALL SURFACES AND SUBSURFACE UTILITIES, BUILDINGS, STRUCTURES, AND OTHER FACILITIES ENCOUNTERED DURING CONSTRUCTION WHETHER OR NOT SHOWN ON THE DRAWINGS.
5. LIMIT CONSTRUCTION ACTIVITY, LAYDOWN, STORAGE, AND OTHER WORK TO WITHIN THE EASEMENT LIMITS, AND RESTORE ALL DAMAGED AREAS IN ACCORDANCE WITH THE SPECIFICATIONS.

TREE LIST

TREE#	TREE LIST	TREE DIAMETER (INCHES)	TREE TYPE	ACTION
310207	LO-39	39	LIVE OAK	PROTECT
310217	CE-16	16	CEDAR ELM	TO REMAIN
310219	LO-20	20	LIVE OAK	REMOVE
310220	CE-15	15	CEDAR ELM	REMOVE
310221	LO-15-14	23	LIVE OAK	REMOVE
310223	CE-12	12	CEDAR ELM	REMOVE
310226	PEC-21	21	PECAN	REMOVE
310232	PEC-28 -20	38	PECAN	PROTECT
310234	PEC-15 -12	21	PECAN	REMOVE
310245	LO -26	26	LIVE OAK	REMOVE
310260	CE-16	16	CEDAR ELM	TO REMAIN
310261	PO-18-18-16-13	41.5	POST OAK	PROTECT
310262	PO-17	17	POST OAK	TO REMAIN
310256	PO-22	22	POST OAK	TO REMAIN
310257	PO-17	17	POST OAK	TO REMAIN
310258	PO-15	15	POST OAK	TO REMAIN

STATE OF TEXAS
GERALD S. FURRIER
129811
LICENSED PROFESSIONAL ENGINEER
12/11/2023

REV. NO.	DATE	DRWN	CHKD	REMARKS
1	1/9/24	AK	GF	ADDENDUM 2

DESIGNED BY: A. KAJALE
DRAWN BY: S. DHANGAR
SHEET CHK'D BY: M. MAHADEVAN
CROSS CHK'D BY: A. RHAMES
APPROVED BY: G. FURRIER
DATE: DECEMBER 2023

CDM Smith
8310-1 N Capital of Texas Hwy, Suite 250
Austin, TX 78731
Tel: (512) 346-1100
TBPELS Firm Registration No. F-3043

CITY OF GEORGETOWN, TEXAS

CEDAR BREAKS AND D B WOOD LIFT STATIONS

LEGEND AND NOTES

PROJECT NO. 2048–272644
FILE NAME: G002NFLG.dwg
SHEET NO.
G-2

XREFs: [REV0_STAMP, CDMS_2234_South lake to South fork_Border] Images: []
Last saved by: KAJALEAN Time: 5/16/2024 11:59:47 AM
pw:\\cdmsmith-ac02-pw.bentley.com:pw_pl1\2048\272644\04 Design Services NM_50%\01 General\10 BIM_CADD\LIFT STATION\G002NFLG.dwg
©2023 CDM SMITH ALL RIGHTS RESERVED.
REUSE OF DOCUMENTS: THESE DOCUMENTS AND DESIGNS PROVIDED BY PROFESSIONAL SERVICE, INCORPORATED HEREIN, ARE THE PROPERTY OF CDM SMITH AND ARE NOT TO BE USED, IN WHOLE OR PART, FOR ANY OTHER PROJECT WITHOUT THE WRITTEN AUTHORIZATION OF CDM SMITH.

Plotted: 5/16/2024 12:04:28 PM

GENERAL NOTES:

PROTECTION OF SURFACE AND SURFACE RESTORATION

1. PROVIDE VIDEO IN ACCORDANCE WITH SPECIFICATION SECTION 13233 DOCUMENTING EXISTING ROADWAY CONDITION NO LESS THAN 200 FEET IN EACH DIRECTION OF CONSTRUCTION ACCESS DRIVEWAYS PRIOR TO BEGINNING OF THE WORK.
2. ALL DAMAGE CAUSED DIRECTLY OR INDIRECTLY TO STREET SURFACES, SIDEWALKS, DRIVEWAYS, CURB AND GUTTER SECTIONS, OR SUBSURFACES SHALL BE RESTORED IN ACCORDANCE WITH THE CONTRACT DOCUMENTS.
3. CUTS IN PAVEMENT SHALL BE SAW CUT IN STRAIGHT, NEAT LINES PARALLEL TO THE EXCAVATION OR UTILITY TRENCH AND TO THE NEXT EXISTING JOINT FOR SIDEWALKS AND CURB AND GUTTER.
4. ALL LAND CLEARING DEBRIS SHALL BE DISPOSED OF IN ACCORDANCE WITH THE DEBRIS DISPOSAL PLAN REQUIRED IN SPECIFICATION SECTION G4 – SITE CLEARING.
5. DURING EXCAVATION, TOPSOIL SHALL BE EXCAVATED AND ISOLATED FROM UNDERLYING SUBSOIL TO THEN BE RESTORED TO ITS ORIGINAL STRATUM DURING THE BACKFILLING PROCESS.
6. PROTECT SURVEY MONUMENTS AND REPLACE ANY SURVEY MONUMENTS DAMAGED OR MOVED AS A RESULT OF THE PROJECT. A TEXAS REGISTERED LAND SURVEYOR SHALL OVERSEE AND CERTIFY THE REPLACEMENT FOR ITS INTENDED USE AND NO SEPARATE PAY WILL BE PROVIDED.

DISPOSAL (OF DEBRIS AND EXCAVATED MATERIAL)

1. REMOVE DEBRIS FROM THE SITE AND DISPOSE IN AN APPROVED WASTE DISPOSAL SITE IN ACCORDANCE WITH SECTION 017419 CONSTRUCTION WASTE MANAGEMENT AND DISPOSAL.
2. REMOVE UNSUITABLE AND EXCESS EXCAVATED MATERIAL FROM THE SITE AND DISPOSE IN A PERMITTED DISPOSAL AREA IN ACCORDANCE WITH SECTION 312000 EARTHWORK.
3. DEBRIS OR EXCAVATED MATERIAL SHALL NOT BE DISPOSED OF IN ANY FLOODPLAIN, WETLAND, OR ENVIRONMENTALLY SENSITIVE AREA.

PROTECTION OF WATER FEATURES (DRAINAGE FEATURES OR CONTROL OF SURFACE WATER)

1. NO WORK SHALL BE PERFORMED IN STREAMS OR WITHIN 100 OR 500-YR FLOODPLAIN. WORK NEAR STREAM OR WETLANDS SHALL BE LIMITED TO THAT WHICH IS ESSENTIAL TO PERFORMANCE OF THE WORK.

STORAGE OF MATERIALS AND CONSTRUCTION EQUIPMENT

1. STORAGE AREAS FOR CONSTRUCTION EQUIPMENT, MATERIALS, AND STOCKPILES OF ANY TYPE WITHIN THE CONSTRUCTION LIMITS SHALL BE IN ACCORDANCE WITH SECTION 00700 GENERAL CONDITIONS.

ADMINISTRATIVE NOTES

1. A MEETING SHALL BE HELD ON-SITE WITH THE CONTRACTOR, DESIGN ENGINEER, AND CONSTRUCTION MANAGER AND/OR INSPECTOR AFTER INSTALLATION OF THE EROSION AND SEDIMENTATION CONTROLS AND TREE/NATURAL AREA PROTECTION MEASURES AND PRIOR TO BEGINNING ANY CLEARING, GRUBBING, OR EXCAVATION. THE CONTRACTOR SHALL NOTIFY THE OWNER AT LEAST THREE DAYS PRIOR TO THE MEETING DATE.
2. NO WORK SHALL BE PERFORMED ON SATURDAYS, SUNDAYS, OR CITY HOLIDAYS WITHOUT WRITTEN PERMISSION BY OWNER. THE SPECIFIED CONTRACT TIMES WERE ESTABLISHED ASSUMING NO WEEKEND OR HOLIDAY WORK. SATURDAYS, SUNDAYS, OR HOLIDAYS WILL BE COUNTED IN DETERMINING THE NUMBER OF CONSECUTIVE CALENDAR DAYS USED TO COMPLETE THE PROJECT. WORKING HOURS ARE LIMITED TO 7:00 AM TO 6:00 PM, MONDAY THROUGH FRIDAY.

DAILY SECURING OF THE SITE

1. INSTALL DEBRIS CAPS AS REQUIRED AFTER CONTRACTOR HAS SET UP BARRICADES WHEN CONSTRUCTION ACTIVITIES HAVE CEASED. DEBRIS CAPS MUST BE INSTALLED IN EXISTING VALVES PRIOR TO BEGINNING WORK AND IN NEW VALVES IMMEDIATELY FOLLOWING CONSTRUCTION.
2. STORE MATERIALS AND EQUIPMENT IN ACCORDANCE WITH SECTION 016000 – PRODUCT REQUIREMENTS.
3. SECURE ALL WORK, MATERIALS, EQUIPMENT, AND PROPERTY FROM LOSS, THEFT, DAMAGE, AND VANDALISM.
4. UNLESS OTHERWISE PERMITTED ON THE DRAWINGS OR BY THE ENGINEER, THE LIMITS OF THE EXCAVATION SHALL NOT ADVANCE BEYOND THE PIPE PLACEMENT SO THAT NO MORE THAN 200 LINEAR FEET OF TRENCH REMAINS OPEN AT THE END OF EACH DAY. SAFETY FENCING SHALL BE INSTALLED AROUND ALL OPEN EXCAVATION.
5. FURNISH AND INSTALL PROPER BARRIERS AND SIGNAGE AROUND EXCAVATION REMAINING OPEN OUTSIDE OF WORK HOURS IF WORK WILL RESUME WITHIN 24 HOURS. BACKFILL EXCAVATED AREAS IF NO WORK IS TO BE PERFORMED ON SITE FOR MORE THAN 24 HOURS.

TREE PROTECTION

1. IDENTIFY, MARK, AND PROTECT TREES AS IDENTIFIED IN THE DRAWINGS.
2. TREES NOT SHOWN TO BE REMOVED SHALL NOT BE REMOVED WITHOUT ENGINEER'S APPROVAL. TREES APPROVED BY THE ENGINEER TO BE TRIMMED, SHALL BE CUT USING PROPER TOOL AND THE TREE SHALL BE PROPERLY SEALED.

EROSION CONTROL

1. THE PLACEMENT OF EROSION AND SEDIMENTATION CONTROLS SHALL BE IN ACCORDANCE WITH THE APPROVED EROSION AND SEDIMENTATION CONTROL (ESC) PLAN. THE ESC PLAN SHALL BE AVAILABLE FOR REVIEW AT ALL TIMES AND USED AS THE BASIS FOR A TPDES REQUIRED SWPPP.
2. INSTALL EROSION AND SEDIMENTATION CONTROLS AND TREE/NATURAL AREA PROTECTIVE FENCING PRIOR TO ANY SITE PREPARATION WORK (CLEARING, GRUBBING, OR EXCAVATION).
3. WHEN REQUIRED, TEMPORARY EROSION CONTROL BLANKET SHALL BE 100% BIODEGRADABLE AND BE OF NET-FREE OR LOOSE WEAVE NET AND RE DESIGNED TO REDUCE POTENTIAL HAZARDS TO WILDLIFE.
4. REVISIONS TO THE EROSION AND SEDIMENT CONTROLS RESULTING IN VARIATION OF MATERIALS OR LOCATIONS OF CONTROLS SHALL BE APPROVED BY THE ENGINEER IN WRITING PRIOR TO EFFECTING SUCH CHANGES.
5. ALL DISTURBED AREAS SHALL BE RESTORED AND REVEGETATED PER SECTION G-7 LOAMING, HYDROSEEDING, AND PERMANENT EROSION CONTROL.

ENVIRONMENTAL, CULTURAL RESOURCES, AND HAZARDOUS WASTE

1. DO NOT ENGAGE IN ANY ACTIVITY THAT PURSUES, HUNTS, TAKES, CAPTURES, KILLS, POSSESSES, SELLS, PURCHASES, BARTERS, IMPORTS, EXPORTS OR TRANSPORTS ANY MIGRATORY BIRD OR ANY PART, NEST OR EGG OF SUCH BIRD.
2. IMMEDIATELY NOTIFY INSPECTOR IF ANY RARE OR ENDANGERED SPECIES, NATURAL PLANT COMMUNITY, OR SPECIAL FEATURE FOUND WITHIN THE SITE.
3. DO NOT ENGAGE IN ANY ACTIVITY THAT TAKES, HARMS OR HARASSES A STATE OR FEDERAL LISTED THREATENED OR ENDANGERED SPECIES. IF A STATE OR FEDERALLY THREATENED OR ENDANGERED SPECIES IS ENCOUNTERED DURING WORK, IMMEDIATELY CEASE WORK IN THE AREA OF THE ENCOUNTER AND NOTIFY THE INSPECTOR AND THE ENGINEER, WHO WILL DETERMINE AN APPROPRIATE COURSE OF ACTION. DO NOT RESUME WORK IN THE AREA OF THE ENCOUNTER UNTIL AUTHORIZED TO DO SO BY THE OWNER.
4. NO WILDLIFE SPECIES SHOULD BE PICKED UP, HANDLED, HARMED, OR KILLED UNLESS THE SAFETY OF WORKERS IS BEING COMPROMISED. AVOID WILDLIFE AND ALLOW TO ESCAPE FROM EQUIPMENT AND CONSTRUCTION AREA WHEN FEASIBLE. WHEN POSSIBLE, COORDINATE REMOVAL OF WILDLIFE WITH THE OWNERS'S ENVIRONMENTAL PROFESSIONAL.
5. MAINTAIN PEDESTRIAN ACCESS ACROSS ALL INTERSECTIONS WITH EXISTING PEDESTRIAN ACCESS. MAINTAINING PEDESTRIAN ACCESS WILL BE CONSIDERED SUBSIDIARY TO TRAFFIC CONTROL ITEMS.
6. IF CULTURAL RESOURCES ARE ENCOUNTERED DURING CONSTRUCTION (ARCHEOLOGICAL FINDINGS UNEARTHED) CONTRACTOR SHALL STOP WORK IN THAT AREA AND IMMEDIATELY CONTACT THE INSPECTOR AND THE TEXAS HISTORICAL COMMISSION AT (512) 463-6100.
7. ALL WORK MUST STOP IN THE AREA AND THE INSPECTOR MUST BE NOTIFIED IF A VOID IN THE ROCK SUBSTRATE IS DISCOVERED WHICH IS; ONE SQUARE FOOT OR LARGER IN TOTAL AREA: BLOWS AIR FROM WITHIN THE SUBSTRATE AND/OR CONSISTENTLY RECEIVES WATER DURING ANY RAIN EVENT.
8. THE CONTRACTOR SHALL CONFORM WITH TCEQ RULES REGARDING THE DISCOVERY AND MITIGATION OF KARST VOIDS DISCOVERED BY EXCAVATION. IF A VOID IS DISCOVERED, THE CONTRACTOR SHALL IMMEDIATELY CEASE WORK IN THE AREA AND CONTACT THE INSPECTOR TO ARRANGE AN ON-SITE INSPECTION.
9. THE CONTRACTOR SHALL IMMEDIATELY NOTIFY THE INSPECTOR OF ANY SUSPECTED HAZARDOUS MATERIALS ENCOUNTERED BEFORE OR DURING PERFORMANCE OF THE WORK AND SHALL TAKE ALL NECESSARY PRECAUTIONS TO AVOID FURTHER DISTURBANCE OF THE MATERIALS.
10. CLEARING IS NOT ALLOWED BETWEEN MARCH 1ST TO SEPTEMBER 1ST.

OTHER GENERAL NOTES

1. ~~NO BLASTING WILL BE PERMITTED.~~ (1)
2. CONTRACTOR SHALL USE TRENCH BOX OR VERTICAL SHORING FOR TRENCH PROTECTION WHEN EXCAVATION DEPTHS EXCEED 6-FEET.
3. ALL EXCAVATED AREAS WITHIN THE CITY OF GEORGETOWN RIGHT OF WAY SHALL BE BACKFILLED WITH LIKE MATERIALS AND TAMPED DOWN BY MEANS OF POUNDING OR COMPACTING IN 6" HORIZONTAL LAYERS TO A DENSITY EQUAL TO 98% OR AS SPECIFIED ON THE PLANS.
4. NOTIFY OWNER AND ENGINEER, IN WRITING, TWO WORKING DAYS IN ADVANCE, THAT THEY ARE PREPARED WITH ALL LABOR, MATERIALS, EQUIPMENT, AND NECESSARY PRELIMINARY WORK TO MAKE CONNECTIONS TO EXISTING PIPELINES. THE OWNER WILL ARRANGE TO OPERATE EXISTING VALVES AS NEEDED.
5. ALL PIPELINE MATERIALS AND INSTALLATION SHALL CONFORM TO THE PLANS AND SPECIFICATIONS, MANUFACTURER'S RECOMMENDATIONS, AND APPLICABLE DETAILS. NOT ALL PIPE FITTINGS OR APPURTENANCES MAY BE CALLED OUT OR SHOWN ON THE DRAWINGS BUT ARE REQUIRED TO BE PROVIDED BY THE CONTRACTOR. HORIZONTAL AND VERTICAL DEFLECTIONS OF THE PIPELINE SHALL BE OBTAINED BY DEFLECTION OF JOINTS, FABRICATED FITTINGS, OR A COMBINATION OF BOTH. JOINT DEFLECTIONS SHALL BE LIMITED TO 75% OF THE MANUFACTURER'S MAXIMUM ALLOWABLE DEFLECTION.
6. ALL WATER AND WASTEWATER MAINS SHALL BE INSTALLED IN ACCORDANCE WITH THE SEPARATION DISTANCES INDICATED IN CHAPTER 290 – DRINKING WATER STANDARDS AND CHAPTER 217 – DESIGN CRITERIA FOR SEWERAGE SYSTEMS OF TCEQ RULES.
7. PROVIDE ADAPTER FITTING AND THRUST RESTRAINT AT ALL CONNECTIONS TO EXISTING PIPING. FOR CONNECTIONS INVOLVING DISSIMILAR METALS (SUCH AS DUCTILE IRON AND STEEL), THE CONTRACTOR SHALL PROVIDE AN ISOLATION KIT AT PIPE CONNECTIONS TO INTERRUPT THE CONTINUITY OF ANY ELECTRICAL CURRENT.
8. COMPLETELY INSTALL AND PRESSURE TEST NEW PIPELINES IN ACCORDANCE WITH THE SPECIFICATIONS PRIOR TO MAKING PERMANENT CONNECTIONS TO EXISTING PIPELINE.
9. ELEVATIONS SHOWN ON THE PIPELINE PROFILES ARE INVERT (OR FLOWLINE) OF PIPE UNLESS OTHERWISE NOTED.
10. INSTALL COMBINATION AIR RELEASE-AIR VACUUM ASSEMBLIES AT ALL HIGH POINTS AND DRAIN VALVE ASSEMBLIES AT POINTS INDICATED IN THE PROPOSED PIPE ALIGNMENT.
11. PROVIDE VALVE BOXES FOR ALL BURIED VALVES PER THE PLANS AND SPECIFICATIONS. ADJUST ALL VALVE BOXES TO FINISHED GRADE UNLESS OTHERWISE SHOWN ORL DIRECTED.
12. UPON COMPLETION OF CONSTRUCTION, PROVIDE THE SIZE, LOCATION, AND ELEVATION OF ALL UTILITIES CROSSED AND SHALL REFLECT SUCH ON THE AS-BUILT DRAWINGS.
13. PREPARE AND FILE ALL DOCUMENTATION NECESSARY TO CONFIRM TO THE TEXAS COMMISSION ON ENVIRONMENTAL QUALITY (TCEQ) REGULATIONS REGARDING THE TEXAS POLLUTANT DISCHARGE ELIMINATION SYSTEM (TPDES). SAID DOCUMENTATION SHALL INCLUDE A STORMWATER POLLUTION PREVENTION PLAN (SWPPP) PREPARED PRIOR TO THE START OF CONSTRUCTION. A COPY OF SAID SWPPP SHALL BE PROVIDED TO THE OWNER PRIOR TO THE START OF CONSTRUCTION. STORMWATER MANAGEMENT SHALL COMPLY WITH ALL OTHER APPLICABLE CODES OR REGULATIONS.

THRUST RESTRAINT NOTES

1. THE THRUST RESTRAINT DISTANCES SHOWN INDICATE THE MINIMUM REQUIRED RESTRAINED LENGTHS FOR THE FINISHED INSTALLATION. ADDITIONAL RESTRAINTS ARE REQUIRED IF TEMPORARY PLUGS OR OTHER FITTINGS ARE USED FOR PIPELINE TESTING. NO SEPARATE PAY.
2. SEGMENTS OF PIPE IN VAULTS OR IN CASING PIPE DO NOT COUNT TOWARD THE REQUIRED RESTRAINED JOINT LENGTH.
3. ALL FITTINGS, VALVES, PIG-LAUNCH/CLEANOUTS, AND OTHER APPURTENANCES SHALL BE FULLY RESTRAINED.
4. THE END OF THE LINE SHALL BE RESTRAINED A MINIMUM DISTANCE EQUAL TO A DEAD END.
5. VALVE LOCATIONS SHALL BE RESTRAINED IN BOTH DIRECTIONS A MINIMUM DISTANCE EQUAL TO A DEAD END.
6. FOR ANY GIVEN PIPE MATERIAL THE CONTRACTOR MAY PROPOSE ALTERNATE RESTRAINED LENGTHS FOR THE ENGINEER'S CONSIDERATION BY FILING A WRITTEN REQUEST PREPARED BY THE PIPE MANUFACTURER AND SUPPORTED BY DETAILED CALCULATIONS PREPARED AND SEALED BY A LICENSED ENGINEER. ALL SUCH CALCULATIONS SHALL BE BASED ON THE APPLICABLE TEST PRESSURE AND A FACTOR OF SAFETY OF 2.0.

CONTRACTOR ACCESS NOTES

1. ANY UN-PAVED ROAD USED FOR CONSTRUCTION TRAFFIC, INCLUDING HAUL ROUTES, SHALL BE RESTORED TO PRE-CONSTRUCTION CONDITIONS OR BETTER FOLLOWING CONSTRUCTION.
2. CONTRACTOR SHALL REVIEW THE ENTIRE PROJECT AREA AND BECOME FAMILIAR WITH ACCESSIBILITY RESTRICTIONS. CONTRACTOR IS RESPONSIBLE FOR PROVIDING LABOR, EQUIPMENT AND MATERIALS NECESSARY TO ACCESS THE SITE.
3. ACCESS PLAN MODIFICATION MAY BE PERMITTED; HOWEVER, THE CONTRACTOR WILL BE ENTIRELY RESPONSIBLE FOR OBTAINING ALL APPLICABLE EASEMENTS, PERMITS, PERMISSIONS, AND/OR COSTS NECESSARY AND APPROVAL BY THE OWNER.
4. ALL PAVEMENT REPAIRS TO EXISTING PAVED ROADS AT CONSTRUCTION TRAFFIC ENTRY/EXIT POINTS TO THE PROJECT SITE TO RESTORE TO EQUAL OR BETTER CONDITIONS THAN EXISTED PRIOR TO CONSTRUCTION.
5. THE CONTRACTOR SHALL ASSUME FULL RESPONSIBILITY FOR SECURITY AND FOR JOB SITE CONDITIONS DURING CONSTRUCTION OF THIS PROJECT, INCLUDING THE SAFETY OF PERSONS AND PROPERTY. THIS REQUIREMENT SHALL APPLY CONTINUOUSLY AND NOT BE LIMITED TO NORMAL WORKING HOURS.

ABBREVIATIONS

ASTM	AMERICAN SOCIETY OF TESTING AND MATERIALS
ABAN	ABANDONED
AC	ASPHALTIC CONCRETE OR ASPHALT
AFG	ABOVE FINISHED GRADE
AHD	AHEAD
ALT	ALTERNATE
APPROX	APPROXIMATE
AR	AIR RELEASE VALVE
ASPH	ASPHALT
AVAR, AV/AR	AIR VACUUM RELIEF/ AIR RELEASE VALVE
AVE	AVENUE
BF	BLIND FLANGE
BFV	BUTTERFLY VALVE
BG	BELOW GRADE
BK	BACK
BLVD	BOULEVARD
BM	BENCHMARK
BO	BLOW OFF
CATV	CABLE TV
C	CIVIL
CAV	AIR VACUUM RELIEF/AIR RELEASE VALVE
℄	CENTERLINE
CB	CATCH BASIN
CL	CLASS, CENTERLINE
CLR	CLEARANCE
CML&C	CEMENT MORTAR LINED AND COATED
CML&T	CEMENT MORTAR LINED AND TAPE COATED
COMB	COMBINATION
CONC	CONCRETE
CONST	CONSTRUCTION
CONT	CONTINUOUS, CONTINUATION
COORD	COORDINATE
CP	CONTROL POINT
CPLG	COUPLING
DEF	DEFLECTION
DEMO	DEMOLISH/DEMOLITION
DEPT	DEPARTMENT
DET	DETAIL
DIA	DIAMETER
DI	DUCTILE IRON PIPE
DR	DIMENSION RATIO/DRAIN
DWG	DRAWING
E	EAST, EASTERLY, EASTING
EA	EACH
EG	EXIST GRADE
EF	EACH FACE
ELEC	ELECTRIC, ELECTRICAL
ELEV	ELEVATION, ELEVATED
ENGR	ENGINEER
EOP	EDGE OF PAVEMENT
EQ	EQUATION
ESMT	EASEMENT
EXIST, EX	EXISTING
EW	EACH WAY
FG	FINISHED GRADE
FH	FIRE HYDRANT
FLEX	FLEXIBLE
FLG	FLANGE
FPVC	FUSIBLE POLYVINYL CHLORIDE
FV	FIELD VERIFY
G	GAS
GA.	GAUGE
GALV	GALVANIZED
GPM	GALLONS PER MINUTE
GV	GATE VALVE
GV&B	GATE VALVE AND BOX
HDD	HORIZONTAL DIRECTIONAL DRILL
HGL	HYDRAULIC GRADE LINE
HORIZ	HORIZONTAL
HWY	HIGHWAY
IBC	INTERNATIONAL BUILDING CODE
ID	INSIDE DIAMETER
IE	INVERT ELEVATION
IN	INCHES
INT	INTERSECTION
INV	INVERT
L	LENGTH/LEFT
LB	POUND
LF	LINEAR FEET
LT	LEFT
MAX	MAXIMUM
MFR	MANUFACTURER
MH	MANHOLE
MIN	MINIMUM
MJ	MECHANICAL JOINT
MSL	MEAN SEA LEVEL
N	NORTH, NORTHERLY, NORTHING
NAD83	NORTH AMERICAN DATUM 1983
NIC	NOT IN CONTRACT
NO	NUMBER
NPDES	NATIONAL POLLUTANT DISCHARGE ELIMINATION SYSTEM
NTS	NOT TO SCALE
OD	OUTSIDE DIAMETER
O/C	ON CENTER
OFF	OFFSET
OH	OVERHEAD
OHE	OVERHEAD ELECTRIC
OSHA	OCCUPATIONAL SAFETY AND HEALTH ADMINISTRATION
OT	OVERHEAD TELEPHONE
OTV	OVERHEAD TV
PB	PULL BOX
PC	POINT OF CURVATURE
PE	POLYETHYLENE, PLAIN END
PH	POT HOLE
PI	POINT OF INTERSECTION
PL	PROPERTY LINE
PP	POWER POLE
PSI	POUNDS PER SQUARE INCH
PT	POINT OF TANGENCY
PVC	POLYVINYL CHLORIDE
PVMT	PAVEMENT
PW	PUMP WELL
R	RADIUS
RED	REDUCER
RD	ROAD
R/RT	RIGHT
R/W	RIGHT OF WAY
R&R	REMOVE AND RECONSTRUCT
REF	REFERENCE
REQ'D	REQUIRED
REST'D	RESTRAINED
RJ	RESTRAINED JOINT
RR	RAILROAD
RT	RIGHT
S	SLOPE OR SOUTH
SCP	SURVEY CONTROL POINT
SCH	SCHEDULE
SD	STORM DRAIN
SF	SQUARE FEET
SHT	SHEET
SIM	SIMILAR
SPECS	SPECIFICATIONS
SQ	SQUARE
SS	STAINLESS STEEL, SANITARY SEWER
SSPWC	STANDARD SPECIFICATIONS FOR PUBLIC WORKS CONSTRUCTION
ST	STREET
STD	STANDARD
STA	STATION
STL	STEEL
T&B	TOP AND BOTTOM
TEL	TELEPHONE
TEMP	TEMPORARY
TOB	TOP OF BERM/BANK
TOC	TOP OF CONCRETE
TOW	TOP OF WALL
TXDOT	TEXAS DEPARTMENT OF TRANSPORTATION
TYP	TYPICAL
UGND	UNDERGROUND
UNK	UNKNOWN
UNO	UNLESS NOTED OTHERWISE
US/USA	UNITED STATES/ UNITED STATES OF AMERICA, UNDERGROUND SERVICES ALERT
USC&GS	UNITED STATES COAST AND GEODETIC SURVEY
UTIL	UTILITY
VERT	VERTICAL
W	WATER/WEST/WIDE
W/	WITH
WATCH	WORK AREA TRAFFIC CONTROL HANDBOOK
WCID	WATER CONTROL AND IMPROVEMENTS DISTRICT
WM	WATER MAIN
WS	WELDED STEEL
WT	WEIGHT
WTR	WATER
WV	WATER VALVE
Ø	DIAMETER
@	AT
Δ	DELTA

STATE OF TEXAS
GERALD S. FURRIER
129811
LICENSED PROFESSIONAL ENGINEER
12/11/2023

REV. NO.	DATE	DRWN	CHKD	REMARKS
1	1/9/24	AK	GF	NOTE DELETED.

DESIGNED BY: A. KAJALE
DRAWN BY: S. DHANGAR
SHEET CHK'D BY: M. MAHADEVAN
CROSS CHK'D BY: A. RHAMES
APPROVED BY: G. FURRIER
DATE: DECEMBER 2023

CDM Smith
8310-1 N Capital of Texas Hwy, Suite 250
Austin, TX 78731
Tel: (512) 346-1100
TBPELS Firm Registration No. F-3043

CITY OF GEORGETOWN, TEXAS

CEDAR BREAKS AND D B WOOD LIFT STATIONS

GENERAL NOTES AND ABBREVIATIONS

PROJECT NO. 2048-272644
FILE NAME: G003NFGN.dwg
SHEET NO. G-3

Plotted: 5/16/2024 11:59:11 AM

XREFs: [REVW_G-FURRIER, CDMS_2234] Images: []
Last saved by: KULKARNIMV Time: 12/6/2022 1:50:35 PM
pw:\\cdmsmith-oz02-pw.bentley.com:pw_01\67698\215047\10 Transportation\04 Client Folder Structure\215047 Heros Tunnel\Highway_Ops_eng_data\G002ABBR.dwg
©2023 CDM SMITH ALL RIGHTS RESERVED.
REUSE OF DOCUMENTS: THESE DOCUMENTS AND DESIGNS PROVIDED BY PROFESSIONAL SERVICE, INCORPORATED HEREIN, ARE THE PROPERTY OF CDM SMITH AND ARE NOT TO BE USED, IN WHOLE OR PART, FOR ANY OTHER PROJECT WITHOUT THE WRITTEN AUTHORIZATION OF CDM SMITH.

TEXAS COMMISSION ON ENVIRONMENTAL QUALITY ORGANIZED SEWAGE COLLECTION SYSTEM GENERAL CONSTRUCTION NOTES

1. THIS ORGANIZED SEWAGE COLLECTION SYSTEM MUST BE DESIGNED AND CONSTRUCTED IN ACCORDANCE WITH THE TEXAS COMMISSION ON ENVIRONMENTAL QUALITY'S (TCEQ) EDWARDS AQUIFER RULES 30 TEXAS ADMINISTRATIVE CODE (TAC) §§213.5(C) AND 217.51 –217.70 AND 30 TAC CHAPTER 217, SUBCHAPTER D, AND THE CITY OF GEORGETOWN STANDARD SPECIFICATIONS.

2. ALL CONTRACTORS CONDUCTING REGULATED ACTIVITIES ASSOCIATED WITH THIS PROPOSED REGULATED PROJECT MUST BE PROVIDED WITH COPIES OF THE SEWAGE COLLECTION SYSTEM PLAN AND THE TCEQ LETTER INDICATING THE SPECIFIC CONDITIONS OF ITS APPROVAL. DURING THE COURSE OF THESE REGULATED ACTIVITIES, THE CONTRACTORS MUST BE REQUIRED TO KEEP ON–SITE COPIES OF THE PLAN AND THE APPROVAL LETTER.

3. NO LATER THAN 48 HOURS PRIOR TO COMMENCING ANY REGULATED ACTIVITY, THE APPLICANT OR HIS AGENT MUST NOTIFY THE AUSTIN REGIONAL OFFICE, IN WRITING, OF THE DATE ON WHICH THE REGULATED ACTIVITY WILL BEGIN.

4. ANY MODIFICATION TO THE ACTIVITIES DESCRIBED IN THE REFERENCED SCS APPLICATION FOLLOWING THE DATE OF APPROVAL MAY REQUIRE THE SUBMITTAL OF AN SCS APPLICATION TO MODIFY THIS APPROVAL, INCLUDING THE PAYMENT OF APPROPRIATE FEES AND ALL INFORMATION NECESSARY FOR ITS REVIEW AND APPROVAL.

5. ALL TEMPORARY EROSION AND SEDIMENTATION CONTROLS MUST BE INSTALLED PRIOR TO CONSTRUCTION, MUST BE MAINTAINED DURING CONSTRUCTION, AND MUST BE REMOVED WHEN SUFFICIENT VEGETATION IS ESTABLISHED TO CONTROL THE EROSION AND SEDIMENTATION AND THE CONSTRUCTION AREA IS STABILIZED.

6. IF ANY SENSITIVE FEATURES ARE DISCOVERED DURING THE WASTEWATER LINE TRENCHING ACTIVITIES, ALL REGULATED ACTIVITIES NEAR THE SENSITIVE FEATURE MUST BE SUSPENDED IMMEDIATELY. THE APPLICANT MUST IMMEDIATELY NOTIFY THE APPROPRIATE REGIONAL OFFICE OF THE TEXAS COMMISSION ON ENVIRONMENTAL QUALITY OF THE FEATURE DISCOVERED. A GEOLOGIST'S ASSESSMENT OF THE LOCATION AND EXTENT OF THE FEATURE DISCOVERED MUST BE REPORTED TO THAT REGIONAL OFFICE IN WRITING WITHIN TWO WORKING DAYS. THE APPLICANT MUST SUBMIT A PLAN FOR ENSURING THE STRUCTURAL INTEGRITY OF THE SEWER LINE OR FOR MODIFYING THE PROPOSED COLLECTION SYSTEM ALIGNMENT AROUND THE FEATURE. THE REGULATED ACTIVITIES NEAR THE SENSITIVE FEATURE MAY NOT PROCEED UNTIL THE EXECUTIVE DIRECTOR HAS REVIEWED AND APPROVED THE METHODS PROPOSED TO PROTECT THE SENSITIVE FEATURE AND THE EDWARDS AQUIFER FROM ANY POTENTIALLY ADVERSE IMPACTS TO WATER QUALITY WHILE MAINTAINING THE STRUCTURAL INTEGRITY OF THE LINE.

7. SEWER LINES LOCATED WITHIN OR CROSSING THE 5–YEAR FLOODPLAIN OF A DRAINAGE WAY WILL BE PROTECTED FROM INUNDATION AND STREAM VELOCITIES WHICH COULD CAUSE EROSION AND SCOURING OF BACKFILL. THE TRENCH MUST BE CAPPED WITH CONCRETE TO PREVENT SCOURING OF BACKFILL, OR THE SEWER LINES MUST BE ENCASED IN CONCRETE. ALL CONCRETE SHALL HAVE A MINIMUM THICKNESS OF SIX (6) INCHES.

8. BLASTING PROCEDURES FOR PROTECTION OF EXISTING SEWER LINES AND OTHER UTILITIES WILL BE IN ACCORDANCE WITH THE NATIONAL FIRE PROTECTION ASSOCIATION CRITERIA. SAND IS NOT ALLOWED AS BEDDING OR BACKFILL IN TRENCHES THAT HAVE BEEN BLASTED. IF ANY EXISTING SEWER LINES ARE DAMAGED, THE LINES MUST BE REPAIRED AND RETESTED.

9. ALL MANHOLES CONSTRUCTED OR REHABILITATED ON THIS PROJECT MUST HAVE WATERTIGHT SIZE ON SIZE RESILIENT CONNECTORS ALLOWING FOR DIFFERENTIAL SETTLEMENT. IF MANHOLES ARE CONSTRUCTED WITHIN THE 100–YEAR FLOODPLAIN, THE COVER MUST HAVE A GASKET AND BE BOLTED TO THE RING. WHERE GASKETED MANHOLE COVERS ARE REQUIRED FOR MORE THAN THREE MANHOLES IN SEQUENCE OR FOR MORE THAN 1500 FEET, ALTERNATE MEANS OF VENTING WILL BE PROVIDED. BRICKS ARE NOT AN ACCEPTABLE CONSTRUCTION MATERIAL FOR ANY PORTION OF THE MANHOLE.

   THE DIAMETER OF THE MANHOLES MUST BE A MINIMUM OF FOUR FEET AND THE MANHOLE FOR ENTRY MUST HAVE A MINIMUM CLEAR OPENING DIAMETER OF 30 INCHES. THESE DIMENSIONS AND OTHER DETAILS SHOWING COMPLIANCE WITH THE COMMISSION'S RULES CONCERNING MANHOLES AND SEWER LINE/MANHOLE INVERTS DESCRIBED IN 30 TAC §217.55 ARE INCLUDED ON PLAN SHEET –– OF ––.

   IT IS SUGGESTED THAT ENTRANCE INTO MANHOLES IN EXCESS OF FOUR FEET DEEP BE ACCOMPLISHED BY MEANS OF A PORTABLE LADDER. THE INCLUSION OF STEPS IN A MANHOLE IS PROHIBITED.

11. WHERE WATER LINES AND NEW SEWER LINE ARE INSTALLED WITH A SEPARATION DISTANCE CLOSER THAN NINE FEET (I.E., WATER LINES CROSSING WASTEWATER LINES, WATER LINES PARALLELING WASTEWATER LINES, OR WATER LINES NEXT TO MANHOLES) THE INSTALLATION MUST MEET THE REQUIREMENTS OF 30 TAC §217.53(D) (PIPE DESIGN) AND 30 TAC §290.44(E) (WATER DISTRIBUTION).

12. WHERE SEWERS LINES DEVIATE FROM STRAIGHT ALIGNMENT AND UNIFORM GRADE ALL CURVATURE OF SEWER PIPE MUST BE ACHIEVED BY THE FOLLOWING PROCEDURE WHICH IS RECOMMENDED BY THE PIPE MANUFACTURER:

    IF PIPE FLEXURE IS PROPOSED, THE FOLLOWING METHOD OF PREVENTING DEFLECTION OF THE JOINT MUST BE USED:

    SPECIFIC CARE MUST BE TAKEN TO ENSURE THAT THE JOINT IS PLACED IN THE CENTER OF THE TRENCH AND PROPERLY BEDDED IN ACCORDANCE WITH 30 TAC §217.54.

13. NEW SEWAGE COLLECTION SYSTEM LINES MUST BE CONSTRUCTED WITH STUB OUTS FOR THE CONNECTION OF ANTICIPATED EXTENSIONS. THE LOCATION OF SUCH STUB OUTS MUST BE MARKED ON THE GROUND SUCH THAT THEIR LOCATION CAN BE EASILY DETERMINED AT THE TIME OF CONNECTION OF THE EXTENSIONS. SUCH STUB OUTS MUST BE MANUFACTURED WYES OR TEES THAT ARE COMPATIBLE IN SIZE AND MATERIAL WITH BOTH THE SEWER LINE AND THE EXTENSION. AT THE TIME OF ORIGINAL CONSTRUCTION, NEW STUB–OUTS MUST BE CONSTRUCTED SUFFICIENTLY TO EXTEND BEYOND THE END OF THE STREET PAVEMENT. ALL STUB–OUTS MUST BE SEALED WITH A MANUFACTURED CAP TO PREVENT LEAKAGE. EXTENSIONS THAT WERE NOT ANTICIPATED AT THE TIME OF ORIGINAL CONSTRUCTION OR THAT ARE TO BE CONNECTED TO AN EXISTING SEWER LINE NOT FURNISHED WITH STUB OUTS MUST BE CONNECTED USING A MANUFACTURED SADDLE AND IN ACCORDANCE WITH ACCEPTED PLUMBING TECHNIQUES.

14. TRENCHING, BEDDING AND BACKFILL MUST CONFORM WITH 30 TAC §217.54. THE BEDDING AND BACKFILL FOR FLEXIBLE PIPE MUST COMPLY WITH THE STANDARDS OF ASTM D–2321, CLASSES IA, IB, II OR III. RIGID PIPE BEDDING MUST COMPLY WITH THE REQUIREMENTS OF ASTM C 12 (ANSI A 106.2) CLASSES A, B OR C.

15. SEWER LINES MUST BE TESTED FROM MANHOLE TO MANHOLE. WHEN A NEW SEWER LINE IS CONNECTED TO AN EXISTING STUB OR CLEAN–OUT, IT MUST BE TESTED FROM EXISTING MANHOLE TO NEW MANHOLE. IF A STUB OR CLEAN–OUT IS USED AT THE END OF THE PROPOSED SEWER LINE, NO PRIVATE SERVICE ATTACHMENTS MAY BE CONNECTED BETWEEN THE LAST MANHOLE AND THE CLEANOUT UNLESS IT CAN BE CERTIFIED AS CONFORMING WITH THE PROVISIONS OF 30 TAC §213.5(C)(3)(E).

16. ALL SEWER LINES MUST BE TESTED IN ACCORDANCE WITH 30 TAC §217.57. THE ENGINEER MUST RETAIN COPIES OF ALL TEST RESULTS WHICH MUST BE MADE AVAILABLE TO THE EXECUTIVE DIRECTOR UPON REQUEST. THE ENGINEER MUST CERTIFY IN WRITING THAT ALL WASTEWATER LINES HAVE PASSED ALL REQUIRED TESTING TO THE APPROPRIATE REGIONAL OFFICE WITHIN 30 DAYS OF TEST COMPLETION AND PRIOR TO USE OF THE NEW COLLECTION SYSTEM. TESTING METHOD WILL BE:

    (A) FOR A COLLECTION SYSTEM PIPE THAT WILL TRANSPORT WASTEWATER BY GRAVITY FLOW, THE DESIGN MUST SPECIFY AN INFILTRATION AND EXFILTRATION TEST OR A LOW–PRESSURE AIR TEST. A TEST MUST CONFORM TO THE FOLLOWING REQUIREMENTS:

    (1) LOW PRESSURE AIR TEST.

    (A) A LOW PRESSURE AIR TEST MUST FOLLOW THE PROCEDURES DESCRIBED IN AMERICAN SOCIETY FOR TESTING AND MATERIALS (ASTM) C–828, ASTM C–924, OR ASTM F–1417 OR OTHER PROCEDURE APPROVED BY THE EXECUTIVE DIRECTOR, EXCEPT AS TO TESTING TIMES AS REQUIRED IN TABLE C.3 IN SUBPARAGRAPH (C) OF THIS PARAGRAPH OR EQUATION C.3 IN SUBPARAGRAPH (B)(II) OF THIS PARAGRAPH.

    (B) FOR SECTIONS OF COLLECTION SYSTEM PIPE LESS THAN 36 INCH AVERAGE INSIDE DIAMETER, THE FOLLOWING PROCEDURE MUST APPLY, UNLESS A PIPE IS TO BE TESTED AS REQUIRED BY PARAGRAPH (2) OF THIS SUBSECTION.

        (I) A PIPE MUST BE PRESSURIZED TO 3.5 POUNDS PER SQUARE INCH (PSI) GREATER THAN THE PRESSURE EXERTED BY GROUNDWATER ABOVE THE PIPE.

        (II) ONCE THE PRESSURE IS STABILIZED, THE MINIMUM TIME ALLOWABLE FOR THE PRESSURE TO DROP FROM 3.5 PSI GAUGE TO 2.5 PSI GAUGE IS COMPUTED FROM THE FOLLOWING EQUATION:

        EQUATION C.3

        WHERE: $T = \frac{0.085 x D x K}{Q}$

        T = TIME FOR PRESSURE TO DROP 1.0 POUND PER SQUARE INCH GAUGE IN SECONDS
        K = 0.000419 X D X L, BUT NOT LESS THAN 1.0
        D = AVERAGE INSIDE PIPE DIAMETER IN INCHES
        L = LENGTH OF LINE OF SAME SIZE BEING TESTED, IN FEET
        Q = RATE OF LOSS, 0.0015 CUBIC FEET PER MINUTE PER SQUARE FOOT INTERNAL SURFACE

    (C) SINCE A K VALUE OF LESS THAN 1.0 MAY NOT BE USED, THE MINIMUM TESTING TIME FOR EACH PIPE DIAMETER IS SHOWN IN THE FOLLOWING TABLE C.3:

PIPE DIAMETER (INCHES)	MINIMUM TIME (SECONDS)	MAXIMUM LENGTH FOR MINIMUM TIME (FEET)	TIME FOR LONGER LENGTH (SECONDS/FOOT)
6	340	398	0.855
8	454	298	1.520
10	567	239	2.374
12	680	199	3.419
15	850	159	5.342
18	1020	133	7.693
21	1190	114	10.471
24	1360	100	13.676
27	1530	88	17.309
30	1700	80	21.369
33	1870	72	25.856

    (D) AN OWNER MAY STOP A TEST IF NO PRESSURE LOSS HAS OCCURRED DURING THE FIRST 25% OF THE CALCULATED TESTING TIME.

    (E) IF ANY PRESSURE LOSS OR LEAKAGE HAS OCCURRED DURING THE FIRST 25% OF A TESTING PERIOD, THEN THE TEST MUST CONTINUE FOR THE ENTIRE TEST DURATION AS OUTLINED ABOVE OR UNTIL FAILURE.

    (F) WASTEWATER COLLECTION SYSTEM PIPES WITH A 27 INCH OR LARGER AVERAGE INSIDE DIAMETER MAY BE AIR TESTED AT EACH JOINT INSTEAD OF FOLLOWING THE PROCEDURE OUTLINED IN THIS SECTION.

    (G) A TESTING PROCEDURE FOR PIPE WITH AN INSIDE DIAMETER GREATER THAN 33 INCHES MUST BE APPROVED BY THE EXECUTIVE DIRECTOR.

    (2) INFILTRATION/EXFILTRATION TEST.

    (A) THE TOTAL EXFILTRATION, AS DETERMINED BY A HYDROSTATIC HEAD TEST, MUST NOT EXCEED 50 GALLONS PER INCH OF DIAMETER PER MILE OF PIPE PER 24 HOURS AT A MINIMUM TEST HEAD OF 2.0 FEET ABOVE THE CROWN OF A PIPE AT AN UPSTREAM MANHOLE.

    (B) AN OWNER SHALL USE AN INFILTRATION TEST IN LIEU OF AN EXFILTRATION TEST WHEN PIPES ARE INSTALLED BELOW THE GROUNDWATER LEVEL.

    (C) THE TOTAL EXFILTRATION, AS DETERMINED BY A HYDROSTATIC HEAD TEST, MUST NOT EXCEED 50 GALLONS PER INCH DIAMETER PER MILE OF PIPE PER 24 HOURS AT A MINIMUM TEST HEAD OF TWO FEET ABOVE THE CROWN OF A PIPE AT AN UPSTREAM MANHOLE, OR AT LEAST TWO FEET ABOVE EXISTING GROUNDWATER LEVEL, WHICHEVER IS GREATER.

    (D) FOR CONSTRUCTION WITHIN A 25–YEAR FLOOD PLAIN, THE INFILTRATION OR EXFILTRATION MUST NOT EXCEED 10 GALLONS PER INCH DIAMETER PER MILE OF PIPE PER 24 HOURS AT THE SAME MINIMUM TEST HEAD AS IN SUBPARAGRAPH (C) OF THIS PARAGRAPH.

    (E) IF THE QUANTITY OF INFILTRATION OR EXFILTRATION EXCEEDS THE MAXIMUM QUANTITY SPECIFIED, AN OWNER SHALL UNDERTAKE REMEDIAL ACTION IN ORDER TO REDUCE THE INFILTRATION OR EXFILTRATION TO AN AMOUNT WITHIN THE LIMITS SPECIFIED. AN OWNER SHALL RETEST A PIPE FOLLOWING A REMEDIATION ACTION.

    (B) IF A GRAVITY COLLECTION PIPE IS COMPOSED OF FLEXIBLE PIPE, DEFLECTION TESTING IS ALSO REQUIRED. THE FOLLOWING PROCEDURES MUST BE FOLLOWED:

    (1) FOR A COLLECTION PIPE WITH INSIDE DIAMETER LESS THAN 27 INCHES, DEFLECTION MEASUREMENT REQUIRES A RIGID MANDREL.

        (A) MANDREL SIZING.
            (I) A RIGID MANDREL MUST HAVE AN OUTSIDE DIAMETER (OD) NOT LESS THAN 95% OF THE BASE INSIDE DIAMETER (ID) OR AVERAGE ID OF A PIPE, AS SPECIFIED IN THE APPROPRIATE STANDARD BY THE ASTMS, AMERICAN WATER WORKS ASSOCIATION, UNI–BELL, OR AMERICAN NATIONAL STANDARDS INSTITUTE, OR ANY RELATED APPENDIX.

            (II) IF A MANDREL SIZING DIAMETER IS NOT SPECIFIED IN THE APPROPRIATE STANDARD, THE MANDREL MUST HAVE AN OD EQUAL TO 95% OF THE ID OF A PIPE. IN THIS CASE, THE ID OF THE PIPE, FOR THE PURPOSE OF DETERMINING THE OD OF THE MANDREL, MUST EQUAL BE THE AVERAGE OUTSIDE DIAMETER MINUS TWO MINIMUM WALL THICKNESSES FOR OD CONTROLLED PIPE AND THE AVERAGE INSIDE DIAMETER FOR ID CONTROLLED PIPE.

            (III) ALL DIMENSIONS MUST MEET THE APPROPRIATE STANDARD.

        (B) MANDREL DESIGN.
            (I) A RIGID MANDREL MUST BE CONSTRUCTED OF A METAL OR A RIGID PLASTIC MATERIAL THAT CAN WITHSTAND 200 PSI WITHOUT BEING DEFORMED.

            (II) A MANDREL MUST HAVE NINE OR MORE ODD NUMBER OF RUNNERS OR LEGS.

            (III) A BARREL SECTION LENGTH MUST EQUAL AT LEAST 75% OF THE INSIDE DIAMETER OF A PIPE.

            (IV) EACH SIZE MANDREL MUST USE A SEPARATE PROVING RING.

        (C) METHOD OPTIONS.
            (I) AN ADJUSTABLE OR FLEXIBLE MANDREL IS PROHIBITED.

            (II) A TEST MAY NOT USE TELEVISION INSPECTION AS A SUBSTITUTE FOR A DEFLECTION TEST.

            (III) IF REQUESTED, THE EXECUTIVE DIRECTOR MAY APPROVE THE USE OF A DEFLECTOMETER OR A MANDREL WITH REMOVABLE LEGS OR RUNNERS ON A CASE–BY–CASE BASIS.

    (2) FOR A GRAVITY COLLECTION SYSTEM PIPE WITH AN INSIDE DIAMETER 27 INCHES AND GREATER, OTHER TEST METHODS MAY BE USED TO DETERMINE VERTICAL DEFLECTION.

    (3) A DEFLECTION TEST METHOD MUST BE ACCURATE TO WITHIN PLUS OR MINUS 0.2% DEFLECTION.

    (4) AN OWNER SHALL NOT CONDUCT A DEFLECTION TEST UNTIL AT LEAST 30 DAYS AFTER THE FINAL BACKFILL.

    (5) GRAVITY COLLECTION SYSTEM PIPE DEFLECTION MUST NOT EXCEED FIVE PERCENT (5%).

    (6) IF A PIPE SECTION FAILS A DEFLECTION TEST, AN OWNER SHALL CORRECT THE PROBLEM AND CONDUCT A SECOND TEST AFTER THE FINAL BACKFILL HAS BEEN IN PLACE AT LEAST 30 DAYS.

17. ALL MANHOLES MUST BE TESTED TO MEET OR EXCEED THE REQUIREMENTS OF 30 TAC §217.58.
    (A) ALL MANHOLES MUST PASS A LEAKAGE TEST.

    (B) AN OWNER SHALL TEST EACH MANHOLE (AFTER ASSEMBLY AND BACKFILLING) FOR LEAKAGE, SEPARATE AND INDEPENDENT OF THE COLLECTION SYSTEM PIPES, BY HYDROSTATIC EXFILTRATION TESTING, VACUUM TESTING, OR OTHER METHOD APPROVED BY THE EXECUTIVE DIRECTOR.

    (1) HYDROSTATIC TESTING.
        (A) THE MAXIMUM LEAKAGE FOR HYDROSTATIC TESTING OR ANY ALTERNATIVE TEST METHODS IS 0.025 GALLONS PER FOOT DIAMETER PER FOOT OF MANHOLE DEPTH PER HOUR.
        (B) TO PERFORM A HYDROSTATIC EXFILTRATION TEST, AN OWNER SHALL SEAL ALL WASTEWATER PIPES COMING INTO A MANHOLE WITH AN INTERNAL PIPE PLUG, FILL THE MANHOLE WITH WATER, AND MAINTAIN THE TEST FOR AT LEAST ONE HOUR.
        (C) A TEST FOR CONCRETE MANHOLES MAY USE A 24–HOUR WETTING PERIOD BEFORE TESTING TO ALLOW SATURATION OF THE CONCRETE.
    (2) VACUUM TESTING.
        (A) TO PERFORM A VACUUM TEST, AN OWNER SHALL PLUG ALL LIFT HOLES AND EXTERIOR JOINTS WITH A NON–SHRINK GROUT AND PLUG ALL PIPES ENTERING A MANHOLE.

        (B) NO GROUT MUST BE PLACED IN HORIZONTAL JOINTS BEFORE TESTING.

        (C) STUB–OUTS, MANHOLE BOOTS, AND PIPE PLUGS MUST BE SECURED TO PREVENT MOVEMENT WHILE A VACUUM IS DRAWN.

        (D) AN OWNER SHALL USE A MINIMUM 60 INCH/LB TORQUE WRENCH TO TIGHTEN THE EXTERNAL CLAMPS THAT SECURE A TEST COVER TO THE TOP OF A MANHOLE.

        (E) A TEST HEAD MUST BE PLACED AT THE INSIDE OF THE TOP OF A CONE SECTION, AND THE SEAL INFLATED IN ACCORDANCE WITH THE MANUFACTURER'S RECOMMENDATIONS.

        (F) THERE MUST BE A VACUUM OF 10 INCHES OF MERCURY INSIDE A MANHOLE TO PERFORM A VALID TEST.

        (G) A TEST DOES NOT BEGIN UNTIL AFTER THE VACUUM PUMP IS OFF.

        (H) A MANHOLE PASSES THE TEST IF AFTER 2.0 MINUTES AND WITH ALL VALVES CLOSED, THE VACUUM IS AT LEAST 9.0 INCHES OF MERCURY.

18. ALL PRIVATE SERVICE LATERALS MUST BE INSPECTED AND CERTIFIED IN ACCORDANCE WITH 30 TAC §213.5(C)(3)(I). AFTER INSTALLATION OF AND, PRIOR TO COVERING AND CONNECTING A PRIVATE SERVICE LATERAL TO AN EXISTING ORGANIZED SEWAGE COLLECTION SYSTEM, A TEXAS LICENSED PROFESSIONAL ENGINEER, TEXAS REGISTERED SANITARIAN, OR APPROPRIATE CITY INSPECTOR MUST VISUALLY INSPECT THE PRIVATE SERVICE LATERAL AND THE CONNECTION TO THE SEWAGE COLLECTION SYSTEM, AND CERTIFY THAT IT IS CONSTRUCTED IN CONFORMITY WITH THE APPLICABLE PROVISIONS OF THIS SECTION. THE OWNER OF THE COLLECTION SYSTEM MUST MAINTAIN SUCH CERTIFICATIONS FOR FIVE YEARS AND FORWARD COPIES TO THE APPROPRIATE REGIONAL OFFICE UPON REQUEST. CONNECTIONS MAY ONLY BE MADE TO AN APPROVED SEWAGE COLLECTION SYSTEM.

    THESE GENERAL CONSTRUCTION NOTES MUST BE INCLUDED ON THE CONSTRUCTION PLANS PROVIDED TO THE CONTRACTOR AND ALL SUBCONTRACTORS.

    TCEQ–0596 (Rev. 10/01/10)

TCEQ LIFT STATION AND FORCEMAIN GENERAL CONSTRUCTION NOTES:

1. THIS LIFT STATION AND/OR FORCE MAIN MUST BE CONSTRUCTED IN ACCORDANCE WITH 30 TEXAS ADMINISTRATIVE CODE (TAC) §213.5(C), THE TEXAS COMMISSION ON ENVIRONMENTAL QUALITY (TCEQ) EDWARDS AQUIFER RULES, AND ANY LOCAL GOVERNMENT STANDARD SPECIFICATIONS.

2. ANY MODIFICATION TO THE ACTIVITIES DESCRIBED IN THE REFERENCED LIFT STATION/FORCE MAIN (LSFM) SYSTEM APPLICATION FOLLOWING THE DATE OF APPROVAL MAY REQUIRE THE SUBMITTAL OF A LSFM SYSTEM APPLICATION TO MODIFY THIS APPROVAL, INCLUDING THE PAYMENT OF APPROPRIATE FEES AND ALL INFORMATION NECESSARY FOR ITS REVIEW AND APPROVAL.

3. A WRITTEN NOTICE OF CONSTRUCTION MUST BE SUBMITTED TO THE PRESIDING TCEQ REGIONAL OFFICE AT LEAST 48 HOURS PRIOR TO THE START OF ANY REGULATED ACTIVITIES. THIS NOTICE MUST INCLUDE:

    A. THE NAME OF THE APPROVED PROJECT;
    B. THE ACTIVITY START DATE; AND
    C. THE CONTACT INFORMATION OF THE PRIME CONTRACTOR.

4. UPON COMPLETION OF ANY LIFT STATION EXCAVATION, A GEOLOGIST MUST CERTIFY THAT THE EXCAVATION HAS BEEN INSPECTED FOR THE PRESENCE OF SENSITIVE FEATURES. THE CERTIFICATION MUST BE SIGNED, SEALED, AND DATED BY THE GEOLOGIST PREPARING THE CERTIFICATION. CERTIFICATION THAT THE EXCAVATION HAS BEEN INSPECTED MUST BE SUBMITTED TO THE APPROPRIATE REGIONAL OFFICE.

    A. IF SENSITIVE FEATURE(S) ARE IDENTIFIED, ALL REGULATED ACTIVITIES NEAR THE SENSITIVE FEATURE MUST BE SUSPENDED IMMEDIATELY AND MAY NOT PROCEED UNTIL THE EXECUTIVE DIRECTOR HAS REVIEWED AND APPROVED THE METHODS PROPOSED TO PROTECT ANY SENSITIVE FEATURE AND THE EDWARDS AQUIFER FROM POTENTIALLY ADVERSE IMPACTS TO WATER QUALITY FROM THE LIFT STATION.

    B. CONSTRUCTION MAY CONTINUE IF THE GEOLOGIST CERTIFIES THAT NO SENSITIVE FEATURE OR FEATURES WERE PRESENT.

5. IF ANY SENSITIVE FEATURES ARE DISCOVERED DURING THE WASTEWATER LINE TRENCHING ACTIVITIES, ALL REGULATED ACTIVITIES NEAR THE SENSITIVE FEATURE MUST BE SUSPENDED IMMEDIATELY. THE APPLICANT MUST IMMEDIATELY NOTIFY THE APPROPRIATE REGIONAL OFFICE OF THE TCEQ OF THE FEATURE DISCOVERY. A GEOLOGIST'S ASSESSMENT OF THE LOCATION AND EXTENT OF THE FEATURE DISCOVERED MUST BE REPORTED TO THAT REGIONAL OFFICE IN WRITING WITHIN TWO WORKING DAYS. THE APPLICANT MUST SUBMIT A PLAN FOR ENSURING THE STRUCTURAL INTEGRITY OF THE SEWER LINE OR FOR MODIFYING THE PROPOSED COLLECTION SYSTEM ALIGNMENT AROUND THE FEATURE. THE REGULATED ACTIVITIES NEAR THE SENSITIVE FEATURE MAY NOT PROCEED UNTIL THE EXECUTIVE DIRECTOR HAS REVIEWED AND APPROVED THE METHODS PROPOSED TO PROTECT THE SENSITIVE FEATURE AND THE EDWARDS AQUIFER FROM ANY POTENTIALLY ADVERSE IMPACTS TO WATER QUALITY WHILE MAINTAINING THE STRUCTURAL INTEGRITY OF THE LINE.

6. ALL FORCE MAIN LINES MUST BE TESTED IN ACCORDANCE WITH 30 TAC §217.68. TESTING METHOD WILL BE:

    A. A PRESSURE TEST MUST USE 50 POUNDS PER SQUARE INCH ABOVE THE NORMAL OPERATING PRESSURE OF A FORCE MAIN.

    B. A TEMPORARY VALVE FOR PRESSURE TESTING MAY BE INSTALLED NEAR THE DISCHARGE POINT OF A FORCE MAIN AND REMOVED AFTER A TEST IS SUCCESSFULLY COMPLETED.

    C. A PUMP ISOLATION VALVE MAY BE USED AS AN OPPOSITE TERMINATION POINT.

    D. A TEST MUST INVOLVE FILLING A FORCE MAIN WITH WATER.

    E. A PIPE MUST HOLD THE DESIGNATED TEST PRESSURE FOR A MINIMUM OF 4.0 HOURS.

    F. THE LEAKAGE RATE MUST NOT EXCEED 10.0 GALLONS PER INCH DIAMETER PER MILE OF PIPE PER DAY.

STATE OF TEXAS
GERALD S. FURRIER
129811
LICENSED
PROFESSIONAL ENGINEER
12/11/2023

REV. NO.	DATE	DRWN	CHKD	REMARKS

DESIGNED BY: A. KAJALE
DRAWN BY: S. DHANGAR
SHEET CHK'D BY: M. MAHADEVAN
CROSS CHK'D BY: A. RHAMES
APPROVED BY: G. FURRIER
DATE: DECEMBER 2023

CDM Smith
8310-1 N Capital of Texas Hwy, Suite 250
Austin, TX 78731
Tel: (512) 346-1100
TBPELS Firm Registration No. F-3043

CITY OF GEORGETOWN, TEXAS

CEDAR BREAKS AND D B WOOD LIFT STATIONS

STANDARD TCEQ GENERAL CONSTRUCTION NOTES I

PROJECT NO. 2048–272644
FILE NAME: G004NFGN.dwg
SHEET NO.
G-4

XREFs: [CDMS_2234, ADR–SEAL] Images: []
Last saved by: DOAKEC Time: 12/13/2023 3:34:39 PM
pw:\\pw.cdmsmith.com:PW_EXT\2048\109788\04 Design Services NM_30%\01 General\10 CADD\G004TCEQ.DWG
©2023 CDM SMITH ALL RIGHTS RESERVED.
REUSE OF DOCUMENTS: THESE DOCUMENTS AND DESIGNS PROVIDED BY PROFESSIONAL SERVICE, INCORPORATED HEREIN, ARE THE PROPERTY OF CDM SMITH AND ARE NOT TO BE USED, IN WHOLE OR PART, FOR ANY OTHER PROJECT WITHOUT THE WRITTEN AUTHORIZATION OF CDM SMITH.

Plotted: 12/14/2023 1:23:04 PM

© 2023 CDM SMITH ALL RIGHTS RESERVED.
REUSE OF DOCUMENTS: THESE DOCUMENTS AND DESIGNS PROVIDED BY PROFESSIONAL SERVICE, INCORPORATED HEREIN, ARE THE PROPERTY OF CDM SMITH AND ARE NOT TO BE USED, IN WHOLE OR PART, FOR ANY OTHER PROJECT WITHOUT THE WRITTEN AUTHORIZATION OF CDM SMITH.

CONSTRUCTION GENERAL PERMIT
TPDES GENERAL PERMIT TXR150000

THE SWP3 MUST INCLUDE, AT A MINIMUM, THE INFORMATION DESCRIBED IN THIS SECTION.

1. A SITE OR PROJECT DESCRIPTION, WHICH INCLUDES THE FOLLOWING INFORMATION:
   (A) A DESCRIPTION OF THE NATURE OF THE CONSTRUCTION ACTIVITY;

   (B) A LIST OF POTENTIAL POLLUTANTS AND THEIR SOURCES;

   (C) A DESCRIPTION OF THE INTENDED SCHEDULE OR SEQUENCE OF ACTIVITIES THAT WILL DISTURB SOILS FOR MAJOR PORTIONS OF THE SITE;

   (D) THE TOTAL NUMBER OF ACRES OF THE ENTIRE PROPERTY AND THE TOTAL NUMBER OF ACRES WHERE CONSTRUCTION ACTIVITIES WILL OCCUR, INCLUDING OFF–SITE MATERIAL STORAGE AREAS, OVERBURDEN AND STOCKPILES OF DIRT, AND BORROW AREAS THAT ARE AUTHORIZED UNDER THE PERMITTEE'S NOI;

   (E) DATA DESCRIBING THE SOIL OR THE QUALITY OF ANY DISCHARGE FROM THE SITE;

   (F) A MAP SHOWING THE GENERAL LOCATION OF THE SITE (E.G. A PORTION OF A CITY OR COUNTY MAP);

   (G) A DETAILED SITE MAP (OR MAPS) INDICATING THE FOLLOWING:

   (I) DRAINAGE PATTERNS AND APPROXIMATE SLOPES ANTICIPATED AFTER MAJOR GRADING ACTIVITIES;

   (II) AREAS WHERE SOIL DISTURBANCE WILL OCCUR;

   (III) LOCATIONS OF ALL MAJOR STRUCTURAL CONTROLS EITHER PLANNED OR IN PLACE;

   (IV) LOCATIONS WHERE TEMPORARY OR PERMANENT STABILIZATION PRACTICES ARE EXPECTED TO BE USED;

   (V) LOCATIONS OF CONSTRUCTION SUPPORT ACTIVITIES, INCLUDING OFF–SITE ACTIVITIES, THAT ARE AUTHORIZED UNDER THE PERMITTEE'S NOI, INCLUDING MATERIAL, WASTE, BORROW, FILL, OR EQUIPMENT STORAGE AREAS;

   (VI) SURFACE WATERS (INCLUDING WETLANDS) EITHER AT, ADJACENT, OR IN CLOSE PROXIMITY TO THE SITE;

   (VII) LOCATIONS WHERE STORM WATER DISCHARGES FROM THE SITE DIRECTLY TO A SURFACE WATER BODY OR A MUNICIPAL SEPARATE STORM SEWER SYSTEM; AND

   (VIII) VEHICLE WASH AREAS.
   WHERE THE AMOUNT OF INFORMATION REQUIRED TO BE INCLUDED ON THE MAP WOULD RESULT IN A SINGLE MAP BEING DIFFICULT TO READ AND INTERPRET, THE OPERATOR SHALL DEVELOP A SERIES OF MAPS THAT COLLECTIVELY INCLUDE THE REQUIRED INFORMATION.

   (H) THE LOCATION AND DESCRIPTION OF SUPPORT ACTIVITIES AUTHORIZED UNDER THE PERMITTEE'S NOI, INCLUDING ASPHALT PLANTS, CONCRETE PLANTS, AND OTHER ACTIVITIES PROVIDING SUPPORT TO THE CONSTRUCTION SITE THAT IS AUTHORIZED UNDER THIS GENERAL PERMIT;

   (I) THE NAME OF RECEIVING WATERS AT OR NEAR THE SITE THAT MAY BE DISTURBED OR THAT MAY RECEIVE DISCHARGES FROM DISTURBED AREAS OF THE PROJECT;

   (J) A COPY OF THIS TPDES GENERAL PERMIT, AND

   (K) THE NOTICE OF INTENT (NOI) AND ACKNOWLEDGEMENT CERTIFICATE FOR PRIMARY OPERATORS OF LARGE CONSTRUCTION SITES, AND THE SITE NOTICE FOR SMALL CONSTRUCTION SITES AND FOR SECONDARY OPERATORS OF LARGE CONSTRUCTION SITES.

2. A DESCRIPTION OF THE BEST MANAGEMENT PRACTICES (BMPS) THAT WILL BE USED TO MINIMIZE POLLUTION IN RUNOFF.
   THE DESCRIPTION MUST IDENTIFY THE GENERAL TIMING OR SEQUENCE FOR IMPLEMENTATION. AT A MINIMUM, THE DESCRIPTION MUST INCLUDE THE FOLLOWING COMPONENTS:

   (A) GENERAL REQUIREMENTS:

   (I) EROSION AND SEDIMENT CONTROLS MUST BE DESIGNED TO RETAIN SEDIMENT ON–SITE TO THE EXTENT PRACTICABLE WITH CONSIDERATION FOR LOCAL TOPOGRAPHY, SOIL TYPE, AND RAINFALL.

   (II) CONTROL MEASURES MUST BE PROPERLY SELECTED, INSTALLED, AND MAINTAINED ACCORDING TO THE MANUFACTURER'S OR DESIGNER'S SPECIFICATIONS.

   (III) CONTROLS MUST BE DEVELOPED TO MINIMIZE THE OFFSITE TRANSPORT OF LITTER,CONSTRUCTION DEBRIS, AND CONSTRUCTION MATERIALS.

   (B) EROSION CONTROL AND STABILIZATION PRACTICES
   THE SWP3 MUST INCLUDE A DESCRIPTION OF TEMPORARY AND PERMANENT EROSION CONTROL AND STABILIZATION PRACTICES FOR THE SITE, INCLUDING A SCHEDULE OF WHEN THE PRACTICES WILL BE IMPLEMENTED. SITE PLANS SHOULD ENSURE THAT EXISTING VEGETATION IS PRESERVED WHERE IT IS POSSIBLE.

   (I) EROSION CONTROL AND STABILIZATION PRACTICES MAY INCLUDE BUT ARE NOT LIMITED TO: ESTABLISHMENT OF TEMPORARY OR PERMANENT VEGETATION, MULCHING, GEOTEXTILES,SOD STABILIZATION, VEGETATIVE BUFFER STRIPS, PROTECTION OF EXISTING TREES AND VEGETATION, SLOPE TEXTURING, TEMPORARY VELOCITY DISSIPATION DEVICES, FLOW DIVERSION MECHANISMS, AND OTHER SIMILAR MEASURES.

   (II) THE FOLLOWING RECORDS MUST BE MAINTAINED AND EITHER ATTACHED TO OR REFERENCED IN THE SWP3, AND MADE READILY AVAILABLE UPON REQUEST TO THE PARTIES LISTED IN PART III.D.1 OF THIS GENERAL PERMIT:

   (A) THE DATES WHEN MAJOR GRADING ACTIVITIES OCCUR;

   (B) THE DATES WHEN CONSTRUCTION ACTIVITIES TEMPORARILY OR PERMANENTLY CEASE ON A PORTION OF THE SITE; AND

   (C) THE DATES WHEN STABILIZATION MEASURES ARE INITIATED.

   (III) EROSION CONTROL AND STABILIZATION MEASURES MUST BE INITIATED AS SOON AS PRACTICABLE IN PORTIONS OF THE SITE WHERE CONSTRUCTION ACTIVITIES HAVE TEMPORARILY CEASED. STABILIZATION MEASURES THAT PROVIDE A PROTECTIVE COVER MUST BE INITIATED AS SOON AS PRACTICABLE IN PORTIONS OF THE SITE WHERE CONSTRUCTION ACTIVITIES HAVE PERMANENTLY CEASED. EXCEPT AS PROVIDED IN (A) THROUGH (D) BELOW, THESE MEASURES MUST BE INITIATED NO MORE THAN 14 DAYS AFTER THE CONSTRUCTION ACTIVITY IN THAT PORTION OF THE SITE HAS TEMPORARILY OR PERMANENTLY CEASED.

TEXAS COMMISSION ON ENVIRONMENTAL QUALITY
WATER POLLUTION ABATEMENT PLAN
GENERAL CONSTRUCTION NOTES

1. A WRITTEN NOTICE OF CONSTRUCTION MUST BE SUBMITTED TO THE TCEQ REGIONAL OFFICE AT LEAST 48 HOURS PRIOR TO THE START OF ANY REGULATED ACTIVITIES. THIS NOTICE MUST INCLUDE:
   – THE NAME OF THE APPROVED PROJECT;
   – THE ACTIVITY START DATE; AND
   – THE CONTACT INFORMATION OF THE PRIME CONTRACTOR.

2. ALL CONTRACTORS CONDUCTING REGULATED ACTIVITIES ASSOCIATED WITH THIS PROJECT MUST BE PROVIDED WITH COMPLETE COPIES OF THE APPROVED WATER POLLUTION ABATEMENT PLAN (WPAP) AND THE TCEQ LETTER INDICATING THE SPECIFIC CONDITIONS OF ITS APPROVAL. DURING THE COURSE OF THESE REGULATED ACTIVITIES, THE CONTRACTORS ARE REQUIRED TO KEEP ON–SITE COPIES OF THE APPROVED PLAN AND APPROVAL LETTER.

3. IF ANY SENSITIVE FEATURE(S) (CAVES, SOLUTION CAVITY, SINK HOLE, ETC.) IS DISCOVERED DURING CONSTRUCTION, ALL REGULATED ACTIVITIES NEAR THE SENSITIVE FEATURE MUST BE SUSPENDED IMMEDIATELY. THE APPROPRIATE TCEQ REGIONAL OFFICE MUST BE IMMEDIATELY NOTIFIED OF ANY SENSITIVE FEATURES ENCOUNTERED DURING CONSTRUCTION. CONSTRUCTION ACTIVITIES MAY NOT BE RESUMED UNTIL THE TCEQ HAS REVIEWED AND APPROVED THE APPROPRIATE PROTECTIVE MEASURES IN ORDER TO PROTECT ANY SENSITIVE FEATURE AND THE EDWARDS AQUIFER FROM POTENTIALLY ADVERSE IMPACTS TO WATER QUALITY.

4. NO TEMPORARY OR PERMANENT HAZARDOUS SUBSTANCE STORAGE TANK SHALL BE INSTALLED WITHIN 150 FEET OF A WATER SUPPLY SOURCE, DISTRIBUTION SYSTEM, WELL, OR SENSITIVE FEATURE.

5. PRIOR TO BEGINNING ANY CONSTRUCTION ACTIVITY, ALL TEMPORARY EROSION AND SEDIMENTATION (E&S) CONTROL MEASURES MUST BE PROPERLY INSTALLED AND MAINTAINED IN ACCORDANCE WITH THE APPROVED PLANS AND MANUFACTURERS SPECIFICATIONS. IF INSPECTIONS INDICATE A CONTROL HAS BEEN USED INAPPROPRIATELY, OR INCORRECTLY, THE APPLICANT MUST REPLACE OR MODIFY THE CONTROL FOR SITE SITUATIONS. THESE CONTROLS MUST REMAIN IN PLACE UNTIL THE DISTURBED AREAS HAVE BEEN PERMANENTLY STABILIZED.

6. ANY SEDIMENT THAT ESCAPES THE CONSTRUCTION SITE MUST BE COLLECTED AND PROPERLY DISPOSED OF BEFORE THE NEXT RAIN EVENT TO ENSURE IT IS NOT WASHED INTO SURFACE STREAMS, SENSITIVE FEATURES, ETC.

7. SEDIMENT MUST BE REMOVED FROM THE SEDIMENT TRAPS OR SEDIMENTATION BASINS NOT LATER THAN WHEN IT OCCUPIES 50% OF THE BASIN'S DESIGN CAPACITY.

8. LITTER, CONSTRUCTION DEBRIS, AND CONSTRUCTION CHEMICALS EXPOSED TO STORMWATER SHALL BE PREVENTED FROM BEING DISCHARGED OFFSITE.

9. ALL SPOILS (EXCAVATED MATERIAL) GENERATED FROM THE PROJECT SITE MUST BE STORED ON–SITE WITH PROPER E&S CONTROLS. FOR STORAGE OR DISPOSAL OF SPOILS AT ANOTHER SITE ON THE EDWARDS AQUIFER RECHARGE ZONE, THE OWNER OF THE SITE MUST RECEIVE APPROVAL OF A WATER POLLUTION ABATEMENT PLAN FOR THE PLACEMENT OF FILL MATERIAL OR MASS GRADING PRIOR TO THE PLACEMENT OF SPOILS AT THE OTHER SITE.

10. IF PORTIONS OF THE SITE WILL HAVE A TEMPORARY OR PERMANENT CEASE IN CONSTRUCTION ACTIVITY LASTING LONGER THAN 14 DAYS, SOIL STABILIZATION IN THOSE AREAS SHALL BE INITIATED AS SOON AS POSSIBLE PRIOR TO THE 14TH DAY OF INACTIVITY. IF ACTIVITY WILL RESUME PRIOR TO THE 21ST DAY, STABILIZATION MEASURES ARE NOT REQUIRED. IF DROUGHT CONDITIONS OR INCLEMENT WEATHER PREVENT ACTION BY THE 14TH DAY, STABILIZATION MEASURES SHALL BE INITIATED AS SOON AS POSSIBLE.

11. THE FOLLOWING RECORDS SHALL BE MAINTAINED AND MADE AVAILABLE TO THE TCEQ UPON REQUEST:
   – THE DATES WHEN MAJOR GRADING ACTIVITIES OCCUR;
   – THE DATES WHEN CONSTRUCTION ACTIVITIES TEMPORARILY OR PERMANENTLY CEASE ON A PORTION OF THE SITE; AND
   – THE DATES WHEN STABILIZATION MEASURES ARE INITIATED.

12. THE HOLDER OF ANY APPROVED EDWARD AQUIFER PROTECTION PLAN MUST NOTIFY THE APPROPRIATE REGIONAL OFFICE IN WRITING AND OBTAIN APPROVAL FROM THE EXECUTIVE DIRECTOR PRIOR TO INITIATING ANY OF THE FOLLOWING:

A. ANY PHYSICAL OR OPERATIONAL MODIFICATION OF ANY WATER POLLUTION ABATEMENT STRUCTURE(S), INCLUDING BUT NOT LIMITED TO PONDS, DAMS, BERMS, SEWAGE TREATMENT PLANTS, AND DIVERSIONARY STRUCTURES;

B. ANY CHANGE IN THE NATURE OR CHARACTER OF THE REGULATED ACTIVITY FROM THAT WHICH WAS ORIGINALLY APPROVED OR A CHANGE WHICH WOULD SIGNIFICANTLY IMPACT THE ABILITY OF THE PLAN TO PREVENT POLLUTION OF THE EDWARDS AQUIFER;

C. ANY DEVELOPMENT OF LAND PREVIOUSLY IDENTIFIED AS UNDEVELOPED IN THE ORIGINAL WATER POLLUTION ABATEMENT PLAN.

AUSTIN REGIONAL OFFICE
12100 PARK 35 CIRCLE, BUILDING A
AUSTIN, TEXAS 78753–1808
PHONE (512) 339–2929
FAX (512) 339–3795
SAN ANTONIO REGIONAL OFFICE
14250 JUDSON ROAD
SAN ANTONIO, TEXAS 78233–4480
PHONE (210) 490–3096
FAX (210) 545–4329

THESE GENERAL CONSTRUCTION NOTES MUST BE INCLUDED ON THE CONSTRUCTION PLANS PROVIDED TO THE CONTRACTOR AND ALL SUBCONTRACTORS.

TCEQ–0592 (REV. 10/21/15)

STATE OF TEXAS
GERALD S. FURRIER
129811
LICENSED
PROFESSIONAL ENGINEER
12/11/2023

REV. NO.	DATE	DRWN	CHKD	REMARKS

DESIGNED BY: A. KAJALE
DRAWN BY: S. DHANGAR
SHEET CHK'D BY: M. MAHADEVAN
CROSS CHK'D BY: A. RHAMES
APPROVED BY: G. FURRIER
DATE: DECEMBER 2023

CDM Smith
8310-1 N Capital of Texas Hwy, Suite 250
Austin, TX 78731
Tel: (512) 346-1100
TBPELS Firm Registration No. F-3043

CITY OF GEORGETOWN, TEXAS

CEDAR BREAKS AND D B WOOD LIFT STATIONS

TCEQ GENERAL CONSTRUCTION NOTES II

PROJECT NO. 2048–272644
FILE NAME: G005NFMN.dwg
SHEET NO.
G-5

Plotted: 12/14/2023 1:23:22 PM

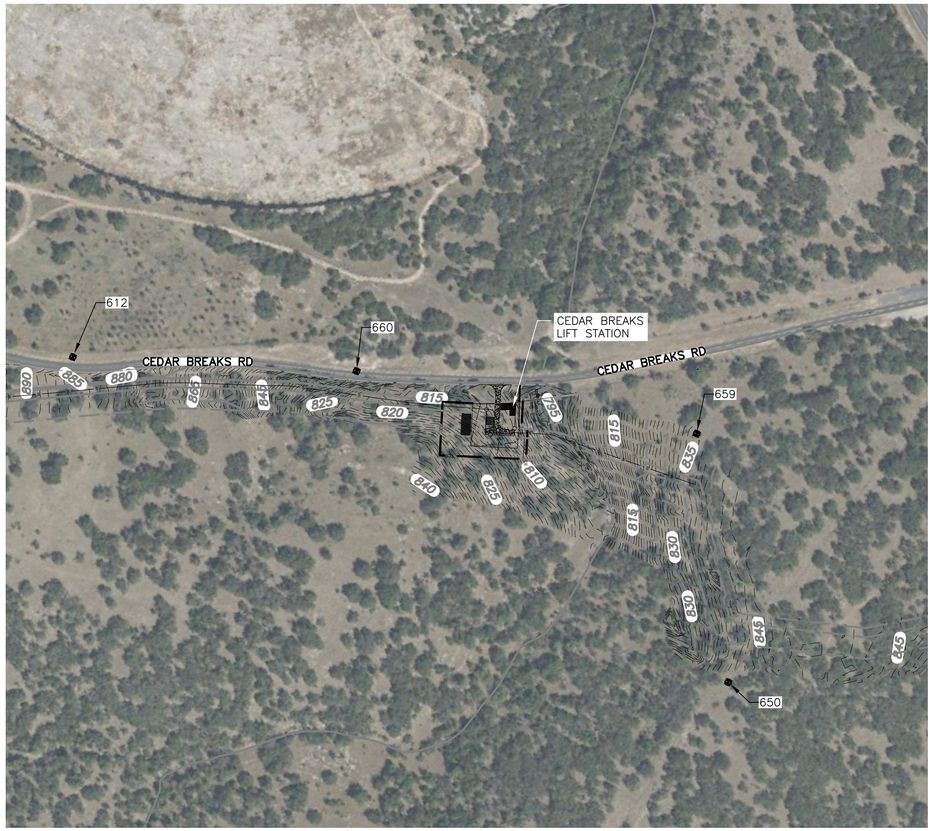

CEDAR BREAK LIFT STATION

PLAN

1" = 250'

D B WOOD LIFT STATION

PLAN

1" = 250'

1" = 250'
125 0 250
N

HORIZONTAL CONTROL POINT TABLE				
POINT NO.	ELEVATION	NORTHING	EASTING	DESCRIPTION
612	885.87	10214526.55	3114211.67	80D/W
650	842.27	10212735.25	3115829.73	80D/W
654	772.39	10209431.96	3118426.38	IRSC-IC-5/8
655	794.67	10209890.37	3118498.38	IRSC-IC-5/8
656	812.98	10211014.29	3117830.92	IRSC-IC-5/8
659	835.59	10213535.88	3116033.31	IRSC-IC-5/8
660	831.35	10214139.81	3115065.46	IRSC-IC-5/8

SURVEY CONTROL NOTE:

SURVEY CONTROL NOTES:
COORDINATES ARE SURFACE VALUES BASED ON THE TEXAS STATE PLANE COORDINATE SYSTEM, NAD 83, CENTRAL ZONE 4203. TO CONVERT COORDINATES AND DISTANCES TO GRID VALUES DIVIDE BY A COMBINED SURFACE ADJUSTMENT FACTOR OF 0.9998673234. ELEVATIONS REPORTED ARE ORTHOMETRIC HEIGHTS BASED ON NAVD 88.

STATE OF TEXAS
GERALD S. FURRIER
129811
LICENSED
PROFESSIONAL ENGINEER
12/11/2023

REV. NO.	DATE	DRWN	CHKD	REMARKS

DESIGNED BY: A. KAJALE
DRAWN BY: M. KULKARNI
SHEET CHK'D BY: M. MAHADEVAN
CROSS CHK'D BY: A. RHAMES
APPROVED BY: G. FURRIER
DATE: DECEMBER 2023

CDM Smith
8310-1 N Capital of Texas Hwy, Suite 250
Austin, TX 78731
Tel: (512) 346-1100
TBPELS Firm Registration No. F-3043

CITY OF GEORGETOWN, TEXAS

CEDAR BREAKS AND D B WOOD LIFT STATIONS

HORIZONTAL CONTROLS PLAN

PROJECT NO. 2048-272644
FILE NAME: G006HCPL.DWG

SHEET NO.
G-6

Plotted: 12/14/2023 1:24:37 PM

XREFs: [CDMS_2234, CWP001YP, CEP000SS, CWP005SR, CWP001LS, CWP002LS, CEP001SS, CEP002SS, CDMS-003-SF INTERCEPTOR BRIDGE-FINAL-REV2, CEP004SS] Images: []
Last saved by: VIDYAVATHL Time: 10/13/2023 6:16:43 PM
C:\pw_pi1\VIDYAVATHL\d3892778\G006HCPL.dwg

©2023 CDM SMITH ALL RIGHTS RESERVED.
REUSE OF DOCUMENTS: THESE DOCUMENTS AND DESIGNS PROVIDED BY PROFESSIONAL SERVICE, INCORPORATED HEREIN, ARE THE PROPERTY OF CDM SMITH AND ARE NOT TO BE USED, IN WHOLE OR PART, FOR ANY OTHER PROJECT WITHOUT THE WRITTEN AUTHORIZATION OF CDM SMITH.

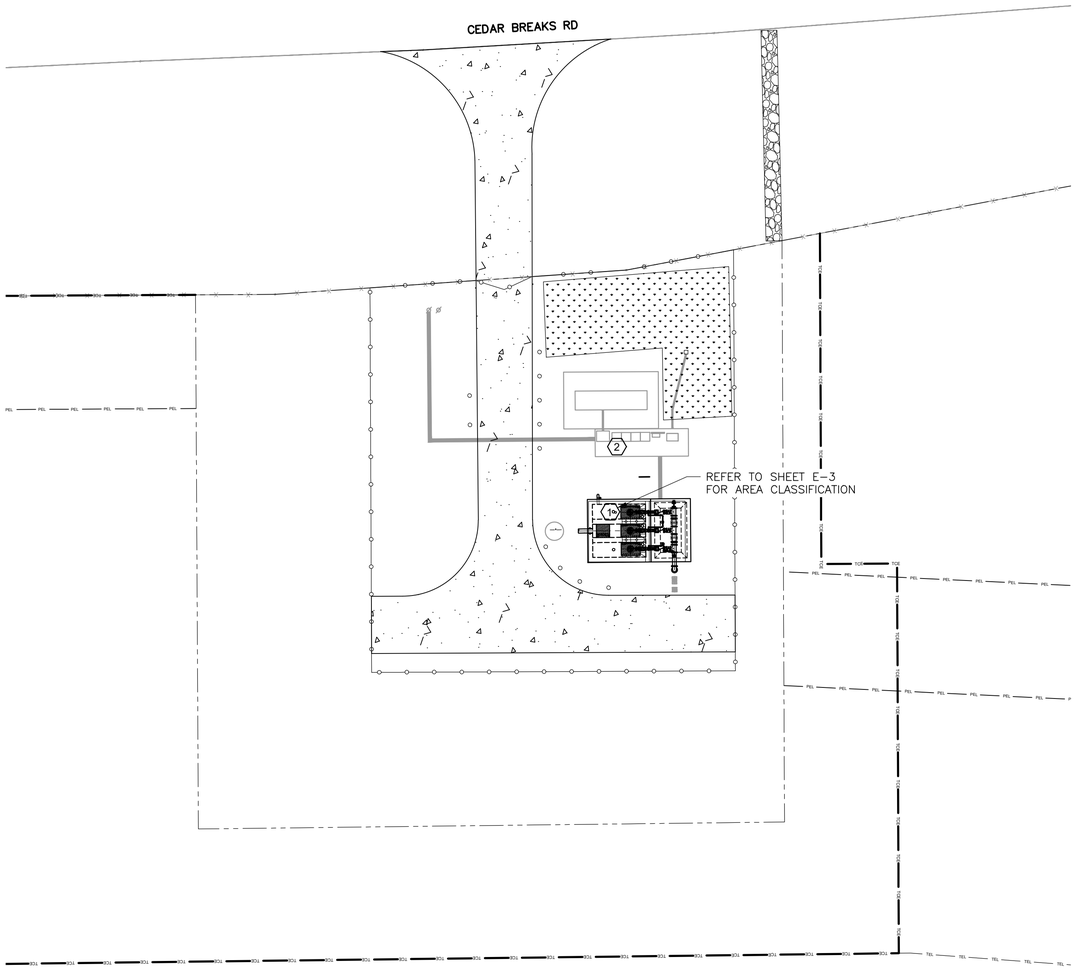

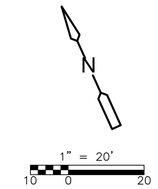

AREA CLASSIFICATION LEGEND:

- CLASS I DIVISION 1
- UNCLASSIFIED
- CLASS I DIVISION 2

ABBREVIATIONS:

N/A – NOT APPLICABLE
CGD – COMBUSTIBLE GAS DETECTION REQUIRED
H – HYDRANT
FE – PORTABLE FIRE EXTINGUISHER
FAS – FIRE ALARM SYSTEM
NR – NO REQUIREMENT
FSS – FIRE SUPPRESSION SYSTEM
FDS – FIRE DETECTION SYSTEM

NOTES:

1. PIPE SUPPORT MATERIALS SHALL BE SIMILAR FOR PROCESS MECHANICAL, PLUMBING, FIRE, HVAC PIPING SYSTEMS.
2. HARDWARE MATERIALS SHALL BE SIMILAR FOR PROCESS MECHANICAL, PLUMBING, FIRE, HVAC, ELECTRICAL, AND INSTRUMENTATION & CONTROL SYSTEMS UNLESS OTHERWISE NOTED.
3. DESIGNATIONS ARE NOTED ON TABLE ABOVE.
4. MATERIALS NOTED ABOVE APPLY TO ALL AREAS OF THE PROJECT UNLESS OTHERWISE NOTED.
5. LIQUIDTIGHT FLEXIBLE ALUMINUM CONDUIT SHALL BE USED FOR CONNECTION TO ONLY VIBRATING EQUIPMENT IN ALL AREAS. CONDUIT BENDS OF MORE THAN 15 DEGREES IN DUCTBANKS AND LOCATIONS WHERE CONDUIT TRANSITIONS FROM BELOW GRADE TO ABOVE GRADE SHALL BE PVC COATED ALUMINUM.
6. ELECTRIC METALLIC TUBING (EMT) – STEEL AND HOT DIPPED GALVANIZED STEEL DEVICE BOXES, HARDWARE AND SUPPORTS SHALL BE USED IN DRY INDOOR AREAS OF THE OPERATIONS FACILITY.
7. PROVIDE SUITABLE INSULATING MATERIAL WITH ADEQUATE DIELECTRIC STRENGTH WHEN DISSIMILAR METALS COME IN CONTACT, AS DETERMINED BY THE PIPE SUPPORT DESIGN ENGINEER.

TAG	AREA	NFPA 820 2016 EDITION	VENTILATION REQUIREMENTS	ELECTRICAL CLASSIFICATION	EXTENT OF CLASSIFIED AREA	NFPA FIRE PROTECTION MEASURES	NOTES
1	WASTEWATER PUMPING STATION WET WELL	TABLE 4.2.2 ROW 16a	NO VENTILATION	CLASS I, DIVISION 1	ENTIRE SPACE REFER TO DETAIL A	NR	CORROSIVE
2	ELECTRICAL EQUIPMENT PAD	N/A	N/A	UNCLASSIFIED	N/A	NR	DRY

AREA CLASSIFICATION TABLE
NTS

DESIGNATION (NOTE 3)	HAZARDOUS CLASSIFICATION	NEMA 250 ENCLOSURE CLASSIFICATION	NEMA 250 ENCLOSURE MATERIALS (NOTE 4)	ELECTRICAL CONDUIT MATERIALS [NOTE 5]	MATERIALS FOR ELECTRICAL OUTLET AND DEVICE BOXES, MOUNTING PLATES AND FITTINGS	MATERIALS FOR ELECTRICAL CONDUITS/CABLET RAY SUPPORTS	ELECTRICAL FRAMING CHANNEL MATERIAL	DUCTWORK MATERIALS [NOTE 8]	MATERIALS FOR DUCTWORK SUPPORTS [NOTE 1 & 4]	MATERIALS FOR PIPING SUPPORTS FOR ALL TRADES [NOTE 1 & 4]	ANCHOR BOLTS FOR ALL TRADES	MOUNTING HARDWARE FOR ALL TRADES, (I.E. NITS, BOLTS, FASTENER, ETC.) [NOTE 2]	NOTES
OUTDOOR, WET CORROSIVE	CLASSIFIED	NEMA 7	316 SST	RIGID ALUMINUM	CAST ALUMINUM	316 SST	316 SST	ALUMINUM, FRP	316 SST	316 SST	316 SST	316 SST	
	UNCLASSIFIED	NEMA 4X	316 SST	RIGID ALUMINUM	CAST ALUMINUM	316 SST	316 SST	ALUMINUM, FRP	316 SST	316 SST	316 SST	316 SST	
OUTDOOR, WET		NEMA 4	PAINTED STEEL	RIGID ALUMINUM	CAST ALUMINUM	HOT DIPPED GALVANIZED STEEL	HOT DIPPED GALVANIZED STEEL	ALUMINUM, FRP	HOT DIPPED GALVANIZED STEEL	317 SST	316 SST	316 SST	

STATE OF TEXAS
GERALD S. FURRIER
129811
LICENSED
PROFESSIONAL ENGINEER
12/11/2023

REV. NO.	DATE	DRWN	CHKD	REMARKS

DESIGNED BY: A. KAJALE
DRAWN BY: S. DHANGAR
SHEET CHK'D BY: M. MAHADEVAN
CROSS CHK'D BY: A. RHAMES
APPROVED BY: G. FURRIER
DATE: DECEMBER 2023

CDM Smith
8310-1 N Capital of Texas Hwy, Suite 250
Austin, TX 78731
Tel: (512) 346-1100
TBPELS Firm Registration No. F-3043

CITY OF GEORGETOWN, TEXAS

CEDAR BREAKS AND D B WOOD LIFT STATIONS

CEDAR BREAKS LIFT STATION
AREA CLASSIFICATION PLAN
AND BUILDING MATERIALS OF CONSTRUCTION

PROJECT NO. 2048–272644
FILE NAME: G007ACPL.DWG
SHEET NO.
G-7

XREFs: [CDMS_2234_CWP001YP, CEP000SS, CWP005SR, CWP001LS, CWP002LS, CEP001SS, CEP002SS, CDMS-003-SF INTERCEPTOR BRIDGE-FINAL-REV2, EWP001ST, M002LSPS, CDMS_2234_South lake to South fork_Border, MWP001LS, SWS001LS, SWP001LS] Images: []
Last saved by: MAHADEVANM Time: 8/9/2023 9:25:02 PM
pw:\\cdnsmith-az2-pw.bentley.com:pw_pi1\2048\272644\04 Design Services NM_50%\01 General\10 BIM_CADD\G007ACPL.dwg
©2023 CDM SMITH ALL RIGHTS RESERVED.
REUSE OF DOCUMENTS: THESE DOCUMENTS AND DESIGNS PROVIDED BY PROFESSIONAL SERVICE, INCORPORATED HEREIN, ARE THE PROPERTY OF CDM SMITH AND ARE NOT TO BE USED, IN WHOLE OR PART, FOR ANY OTHER PROJECT WITHOUT THE WRITTEN AUTHORIZATION OF CDM SMITH.

Plotted: 12/14/2023 1:28:13 PM

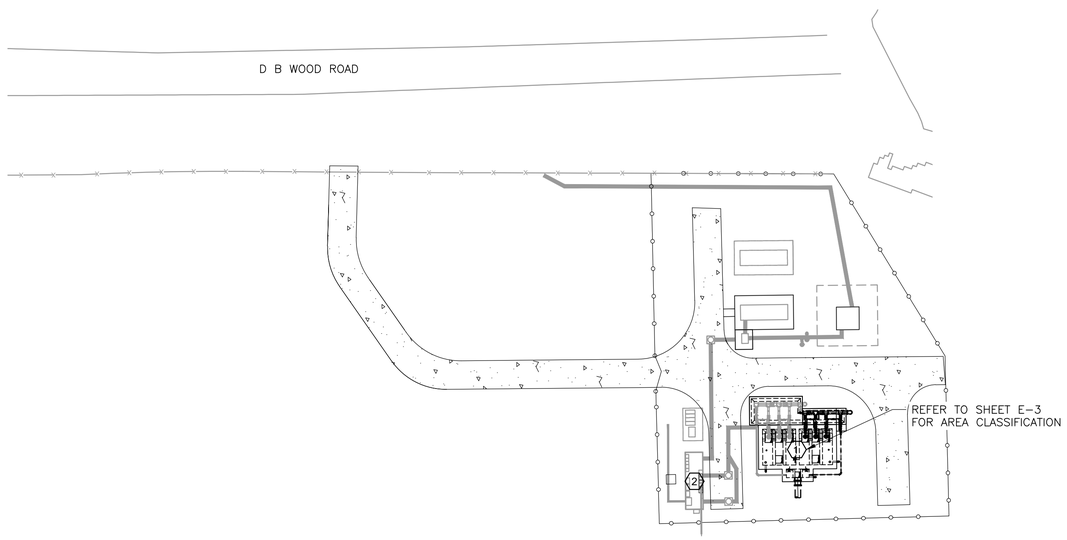

N

1" = 40'
20 0 40

AREA CLASSIFICATION LEGEND:

- CLASS I DIVISION 1
- UNCLASSIFIED
- CLASS I DIVISION 2

ABBREVIATIONS:

N/A – NOT APPLICABLE
CGD – COMBUSTIBLE GAS DETECTION REQUIRED
H – HYDRANT
FE – PORTABLE FIRE EXTINGUISHER
FAS – FIRE ALARM SYSTEM
NR – NO REQUIREMENT
FSS – FIRE SUPPRESSION SYSTEM
FDS – FIRE DETECTION SYSTEM

NOTES:

1. PIPE SUPPORT MATERIALS SHALL BE SIMILAR FOR PROCESS MECHANICAL, PLUMBING, FIRE, HVAC PIPING SYSTEMS.
2. HARDWARE MATERIALS SHALL BE SIMILAR FOR PROCESS MECHANICAL, PLUMBING, FIRE, HVAC, ELECTRICAL, AND INSTRUMENTATION & CONTROL SYSTEMS UNLESS OTHERWISE NOTED.
3. DESIGNATIONS ARE NOTED ON TABLE ABOVE.
4. MATERIALS NOTED ABOVE APPLY TO ALL AREAS OF THE PROJECT UNLESS OTHERWISE NOTED.
5. LIQUIDTIGHT FLEXIBLE ALUMINUM CONDUIT SHALL BE USED FOR CONNECTION TO ONLY VIBRATING EQUIPMENT IN ALL AREAS. CONDUIT BENDS OF MORE THAN 15 DEGREES IN DUCTBANKS AND LOCATIONS WHERE CONDUIT TRANSITIONS FROM BELOW GRADE TO ABOVE GRADE SHALL BE PVC COATED ALUMINUM.
6. ELECTRIC METALLIC TUBING (EMT) – STEEL AND HOT DIPPED GALVANIZED STEEL DEVICE BOXES, HARDWARE AND SUPPORTS SHALL BE USED IN DRY INDOOR AREAS OF THE OPERATIONS FACILITY.
7. PROVIDE SUITABLE INSULATING MATERIAL WITH ADEQUATE DIELECTRIC STRENGTH WHEN DISSIMILAR METALS COME IN CONTACT, AS DETERMINED BY THE PIPE SUPPORT DESIGN ENGINEER.

TAG	AREA	NFPA 820 2016 EDITION	VENTILATION REQUIREMENTS	ELECTRICAL CLASSIFICATION	EXTENT OF CLASSIFIED AREA	NFPA FIRE PROTECTION MEASURES	NOTES
1	WASTEWATER PUMPING STATION WET WELL	TABLE 4.2.2 ROW 16a	NO VENTILATION	CLASS I, DIVISION 1	ENTIRE SPACE REFER TO DETAIL A	NR	CORROSIVE
2	E HOUSE	N/A	N/A	UNCLASSIFIED	N/A	NR	DRY

AREA CLASSIFICATION TABLE

NTS

DESIGNATION [NOTE 3]	HAZARDOUS CLASSIFICATION	NEMA 250 ENCLOSURE CLASSIFICATION	NEMA 250 ENCLOSURE MATERIALS [NOTE 4]	ELECTRICAL CONDUIT MATERIALS [NOTE 5]	MATERIALS FOR ELECTRICAL OUTLET AND DEVICE BOXES, MOUNTING PLATES AND FITTINGS	MATERIALS FOR ELECTRICAL CONDUITS/CABLETRAY SUPPORTS	ELECTRICAL FRAMING CHANNEL MATERIAL	DUCTWORK MATERIALS [NOTE 8]	MATERIALS FOR DUCTWORK SUPPORTS [NOTE 1 & 4]	MATERIALS FOR PIPING SUPPORTS FOR ALL TRADES [NOTE 1 & 4]	ANCHOR BOLTS FOR ALL TRADES	MOUNTING HARDWARE FOR ALL TRADES, (I.E. NITS, BOLTS, FASTENER, ETC.) [NOTE 2]	NOTES
OUTDOOR, WET CORROSIVE	CLASSIFIED	NEMA 7	316 SST	RIGID ALUMINUM	CAST ALUMINUM	316 SST	316 SST	ALUMINUM, FRP	316 SST	316 SST	316 SST	316 SST	
	UNCLASSIFIED	NEMA 4X	316 SST	RIGID ALUMINUM	CAST ALUMINUM	316 SST	316 SST	ALUMINUM, FRP	316 SST	316 SST	316 SST	316 SST	
OUTDOOR, WET CORROSIVE	UNCLASSIFIED	NEMA 4	PAINTED STEEL	RIGID ALUMINUM	CAST ALUMINUM	HOT DIPPED GALVANIZED STEEL	HOT DIPPED GALVANIZED STEEL	ALUMINUM, FRP	HOT DIPPED GALVANIZED STEEL	317 SST	316 SST	316 SST	
INDOOR, DRY	UNCLASSIFIED	NAMA 1/NEMA 12	PAINTED STEEL	RIGID ALUMINUM [6]	CAST ALUMINUM [6]	HOT DIPPED GALVANIZED STEEL	HOT DIPPED GALVANIZED STEEL	ALUMINUM	HOT DIPPED GALVANIZED STEEL	HOT DIPPED GALVANIZED STEEL	HOT DIPPED GALVANIZED STEEL	HOT DIPPED GALVANIZED STEEL	

STATE OF TEXAS
GERALD S. FURRIER
129811
LICENSED PROFESSIONAL ENGINEER
12/11/2023

REV. NO.	DATE	DRWN	CHKD	REMARKS

DESIGNED BY: A. KAJALE
DRAWN BY: S. DHANGAR
SHEET CHK'D BY: M. MAHADEVAN
CROSS CHK'D BY: A. RHAMES
APPROVED BY: G. FURRIER
DATE: DECEMBER 2023

CDM Smith
8310-1 N Capital of Texas Hwy, Suite 250
Austin, TX 78731
Tel: (512) 346-1100
TBPELS Firm Registration No. F-3043

CITY OF GEORGETOWN, TEXAS

CEDAR BREAKS AND D B WOOD LIFT STATIONS

D B WOOD LIFT STATION AREA CLASSIFICATION PLAN AND BUILDING MATERIALS OF CONSTRUCTION

PROJECT NO. 2048–272644
FILE NAME: G008ACPL.DWG

SHEET NO.
G-8

XREFs: [CDMS_2234_CWP001YP, CEP000SS, CWP005SR, CWP011LS, CWP002LS, CEP001SS, CEP002SS, CDMS-003-SF INTERCEPTOR BRIDGE-FINAL-REV2, EWP001ST, M002LSPS, CDMS_2234_South lake to South fork_Border, MWP001LS, SWS001LS, SWP001LS, SWP004LS, EWP002ST] Images: []
Last saved by: MAHADEVAM Time: 8/9/2023 9:23:33 PM
pw:\\cdmsmith-a202-pw.bentley.com:pw_p1\2048\272644\04 Design Services NM_50%\01 General\10 BIM_CADD\G008ACPL.dwg
©2023 CDM SMITH ALL RIGHTS RESERVED.
REUSE OF DOCUMENTS: THESE DOCUMENTS AND DESIGNS PROVIDED BY PROFESSIONAL SERVICE, INCORPORATED HEREIN, ARE THE PROPERTY OF CDM SMITH AND ARE NOT TO BE USED, IN WHOLE OR PART, FOR ANY OTHER PROJECT WITHOUT THE WRITTEN AUTHORIZATION OF CDM SMITH.

Plotted: 12/14/2023 1:32:14 PM

PLAN
1"=50'

PLAN
1"=50'

NOTES:

1. CLEAR THE ENTIRE LIFT STATION PROPERTY, UTILITY EASEMENT AND ACCESS, REVEGETATE AT THE END OF THE PROJECT.
2. CLEAR THE TEMPORARY CONSTRUCTION EASEMENT AS NECESSARY FOR CONSTRUCTION ACTIVITIES AND REVEGETATE AT THE END OF THE PROJECT.
3. CLEARING IS NOT ALLOWED BETWEEN MARCH 1ST TO SEPTEMBER 1ST.

STATE OF TEXAS
GERALD S. FURRIER
129811
LICENSED
PROFESSIONAL ENGINEER
12/11/2023

REV. NO.	DATE	DRWN	CHKD	REMARKS

DESIGNED BY: A. KAJALE
DRAWN BY: M. KULKARNI
SHEET CHK'D BY: A. KAJALE
CROSS CHK'D BY: A. RHAMES
APPROVED BY: G. FURRIER
DATE: DECEMBER 2023

CDM Smith
8310-1 N Capital of Texas Hwy, Suite 250
Austin, TX 78731
Tel: (512) 346-1100
TBPELS Firm Registration No. F-3043

CITY OF GEORGETOWN, TEXAS

CEDAR BREAKS AND D B WOOD LIFT STATIONS

OVERALL SITE PLAN

PROJECT NO. 2048-272644
FILE NAME: C001STPL.DWG
SHEET NO.
C-1

XREFs: [CDMS_2234, CWP002LS, CWP001LS, SWP001LS, SWP002LS, MWP002LS, MWP001LS, CWP003ST, CWP005SR] Images: []
Last saved by: KAJALEAN Time: 12/13/2023 6:35:14 PM
C:\pw_pl1\kajalean\d3867734\C001STPL.dwg
©2023 CDM SMITH ALL RIGHTS RESERVED.
REUSE OF DOCUMENTS: THESE DOCUMENTS AND DESIGNS PROVIDED BY PROFESSIONAL SERVICE, INCORPORATED HEREIN, ARE THE PROPERTY OF CDM SMITH AND ARE NOT TO BE USED, IN WHOLE OR PART, FOR ANY OTHER PROJECT WITHOUT THE WRITTEN AUTHORIZATION OF CDM SMITH.

Plotted: 12/14/2023 12:31:04 PM

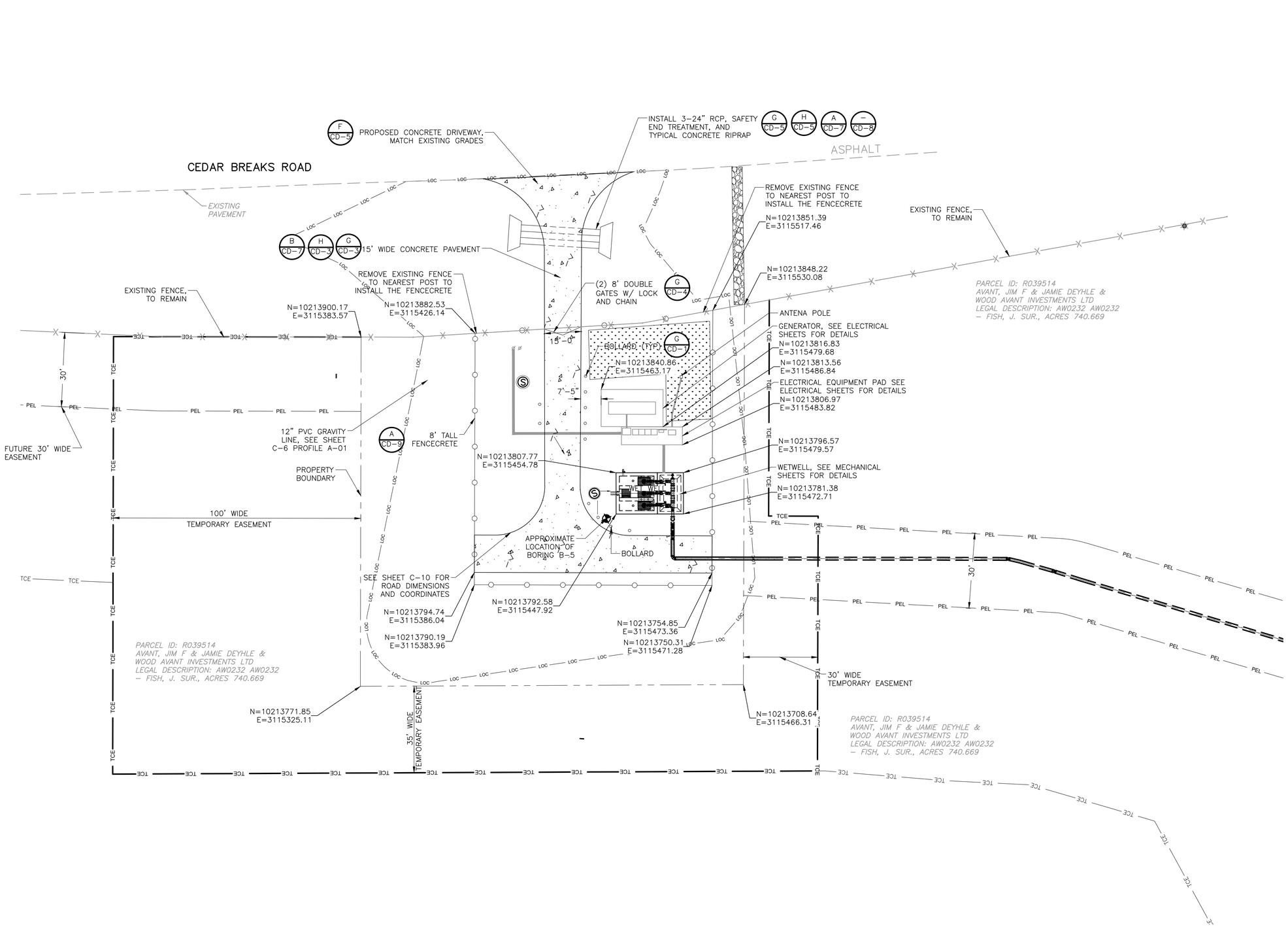

NOTES:

1. SEE SHEET G-6 FOR BENCHMARKS AND PROJECT COORDINATE SYSTEM.
2. SEE SHEET C-3 FOR LIMITS OF TEMPORARY CONSTRUCTION EASEMENT, AND EROSION CONTROL MEASURES.
3. SEE SHEET C-10 FOR GRADING.

PLAN
1" = 20'

STATE OF TEXAS
GERALD S. FURRIER
129811
LICENSED PROFESSIONAL ENGINEER
12/11/2023

REV. NO.	DATE	DRWN	CHKD	REMARKS

DESIGNED BY: A. KAJALE
DRAWN BY: M. MAHADEVAN
SHEET CHK'D BY: A. KAJALE
CROSS CHK'D BY: A. RHAMES
APPROVED BY: G. FURRIER
DATE: DECEMBER 2023

CDM Smith
8310-1 N Capital of Texas Hwy, Suite 250
Austin, TX 78731
Tel: (512) 346-1100
TBPELS Firm Registration No. F-3043

CITY OF GEORGETOWN, TEXAS

CEDAR BREAKS AND D B WOOD LIFT STATIONS

CEDAR BREAKS LIFT STATION
SITE PLAN

PROJECT NO. 2048-272644
FILE NAME: C002LSPL.DWG
SHEET NO.
C-2

XREFs: [CDMS_2234_W-SHADING, CDMS-003-SF INTERCEPTOR BRIDGE-FINAL-REV2, CEZ001SV, EWP001ST, CWP001YP, MWP001LS, SWP001LS, CWP001LS, CDMS_2234_South lake to South fork_Border] Images: []
Last saved by: MAKASHA Time: 10/30/2023 1:22:28 PM
pw:\\cdmsmith-a202-pw.bentley.com:pw_pit\2048\272644\04 Design Services NM_50%\02 Civil\10 BIM_CADD\Lift Stations\C002LSPL.dwg
©2023 CDM SMITH ALL RIGHTS RESERVED.
REUSE OF DOCUMENTS: THESE DOCUMENTS AND DESIGNS PROVIDED BY PROFESSIONAL SERVICE, INCORPORATED HEREIN, ARE THE PROPERTY OF CDM SMITH AND ARE NOT TO BE USED, IN WHOLE OR PART, FOR ANY OTHER PROJECT WITHOUT THE WRITTEN AUTHORIZATION OF CDM SMITH.
Plotted: 12/14/2023 12:36:58 PM

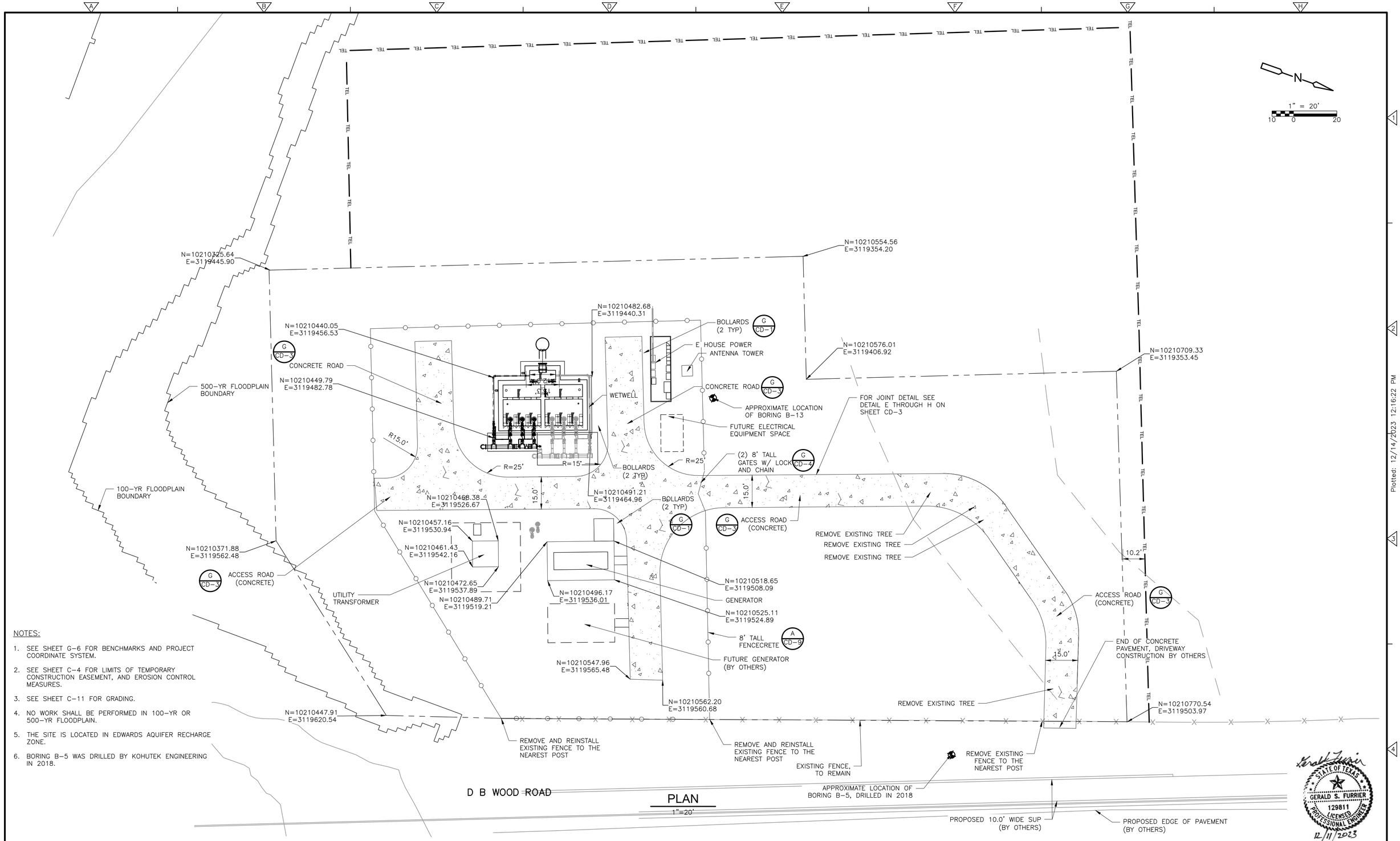

PLAN

1" = 20'

NOTES:

1. SEE SHEET G-6 FOR BENCHMARKS AND PROJECT COORDINATE SYSTEM.
2. SEE SHEET C-4 FOR LIMITS OF TEMPORARY CONSTRUCTION EASEMENT, AND EROSION CONTROL MEASURES.
3. SEE SHEET C-11 FOR GRADING.
4. NO WORK SHALL BE PERFORMED IN 100-YR OR 500-YR FLOODPLAIN.
5. THE SITE IS LOCATED IN EDWARDS AQUIFER RECHARGE ZONE.
6. BORING B-5 WAS DRILLED BY KOHUTEK ENGINEERING IN 2018.

REV. NO.	DATE	DRWN	CHKD	REMARKS

DESIGNED BY: A. KAJALE
DRAWN BY: M. KULKARNI
SHEET CHK'D BY: A. KAJALE
CROSS CHK'D BY: A RHAMES
APPROVED BY: G. FURRIER
DATE: DECEMBER 2023

CDM Smith
8310-1 N Capital of Texas Hwy, Suite 250
Austin, TX 78731
Tel: (512) 346-1100
TBPELS Firm Registration No. F-3043

CITY OF GEORGETOWN, TEXAS

CEDAR BREAKS AND D B WOOD LIFT STATIONS

D B WOOD LIFT STATION
SITE PLAN

PROJECT NO. 2048-272644
FILE NAME: C003STPL.DWG
SHEET NO.
C-3

XREFs: [CDMS_2234, CEP000SS, MWP002LS, EWP002ST, CEP002SS, SWP006EP, SWP002LS, CWP002LS, SWP004LS, CEP004SS, Vehicle tracking, DBW_MDF_ROW] Images: []
Last saved by: MAKASHA Time: 10/30/2023 7:22:11 PM
C:\pw_pt\mukashio\d3867734\C004YPPL.dwg
© 2023 CDM SMITH ALL RIGHTS RESERVED.
REUSE OF DOCUMENTS: THESE DOCUMENTS AND DESIGNS PROVIDED BY PROFESSIONAL SERVICE, INCORPORATED HEREIN, ARE THE PROPERTY OF CDM SMITH AND ARE NOT TO BE USED, IN WHOLE OR PART, FOR ANY OTHER PROJECT WITHOUT THE WRITTEN AUTHORIZATION OF CDM SMITH.
Plotted: 12/14/2023 12:16:22 PM

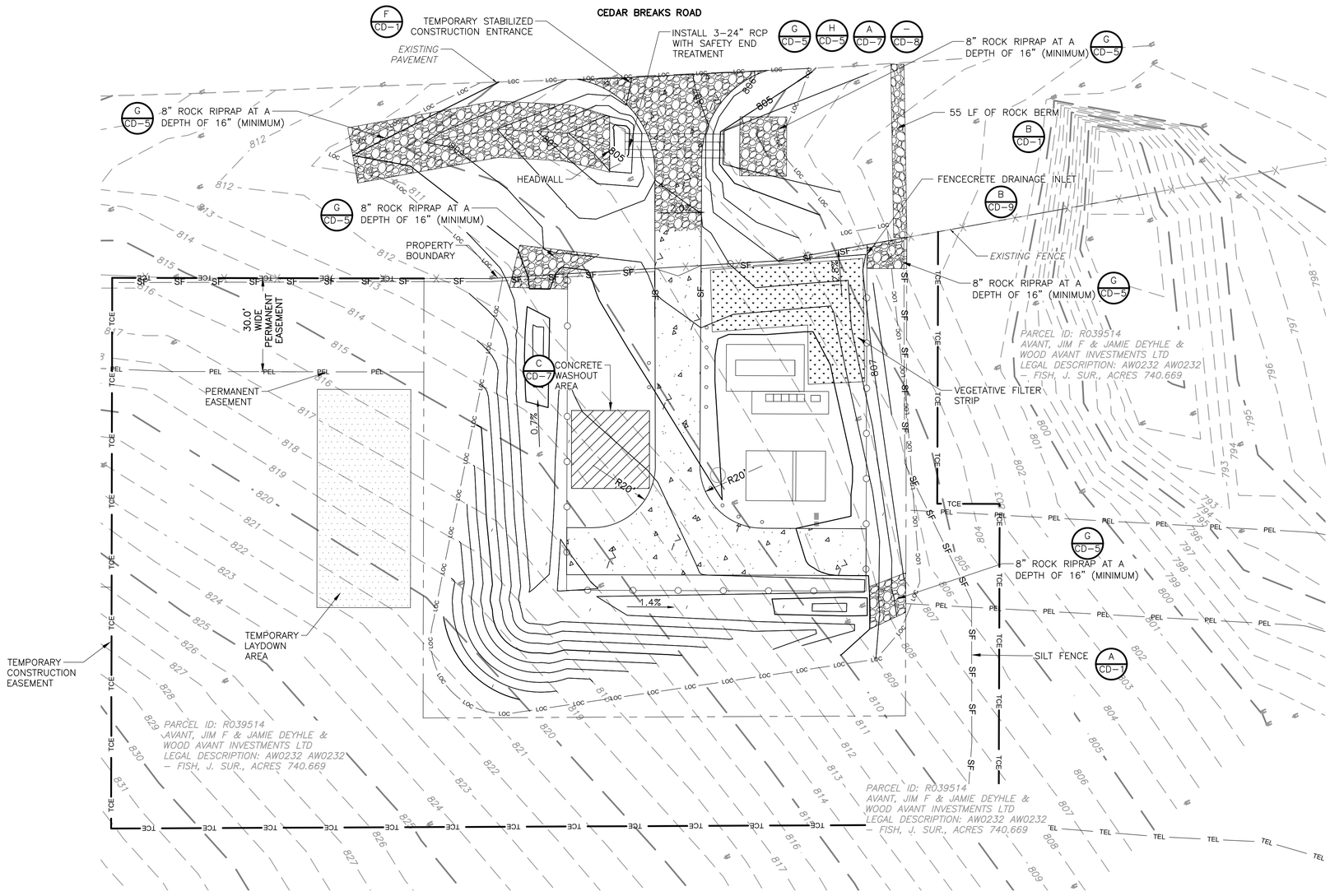

PLAN
1"=20'

NOTE:

1. THE SILT FENCEING AND TEMPORARY EROSION CONTROL MEASUREMENTS SHALL BE INSTALLED BY THE CONTRACTOR IN ACCORDANCE WITH THE CONTRACTOR'S SWPPP. CONTRACTOR ALSO SHALL INSTALL TEMPORARY SILT FENCING ON THE WEST AND SOUTH OF THE PROPERTY ON THE OUTSIDE OF THE FENCE LINE DURING THE FENCING INSTALLATION ACTIVITIES. AFTER THE FENCING IS INSTALLED, THE SILT FENCE SHALL BE INSTALLED AS SHOWN.
2. CONTRACTOR SHALL FIELD COORDINATE THE LOCATIONS OF THE CONTRACTOR LAYDOWN AREA(S), TRAIALER AREA(S), AND CONCRETE WASH DOWN AREA(S) WITH OWNER/OWNER REPRESENTATIVE. EXACT DIMENSIONS OF THE CONCRETE WASH SOWN AREA SHALL BE DETERMINED BY THE CONTRCTOR BASED ON THEIR POUR IMPLEMENTATION PLAN AND SUBMITTED TO THE OWNER /OWNER REPRESENTATIVE FOR REVIEW AND APPROVAL.
3. CONTRACTOR WILL BE RESPONSIBLE FOR KEEPING CEDAR BREAKS ROAD, D B WOOD ROAD, AND ADJACENT PROPERTIES FREE FROM SOIL, DEDIMENT, AND DEBRIS CREATED BY CONSTRUCTION ACTIVITY.
4. CONTRACTOR SHALL BE RESPONSIBLE FOR DUST CONTROL FOR THE SITE.
5. CONTRACTOR SHALL INSTALL ROCK BERM AT LOW POINT OF SILT FENCE.

STATE OF TEXAS
GERALD S. FURRIER
129811
LICENSED PROFESSIONAL ENGINEER
12/11/2023

REV. NO.	DATE	DRWN	CHKD	REMARKS

DESIGNED BY: A. KAJALE
DRAWN BY: M. KULKARNI
SHEET CHK'D BY: A. KAJALE
CROSS CHK'D BY: A. RHAMES
APPROVED BY: G. FURRIER
DATE: DECEMBER 2023

CDM Smith
8310-1 N Capital of Texas Hwy, Suite 250
Austin, TX 78731
Tel: (512) 346-1100
TBPELS Firm Registration No. F-3043

CITY OF GEORGETOWN, TEXAS

CEDAR BREAKS AND D B WOOD LIFT STATIONS

CEDAR BREAKS LIFT STATION
TEMPORARY AND PERMANENT EROSION AND SEDMEMTATION CONTROL PLAN

PROJECT NO. 2048-272644
FILE NAME: C004ESCP.DWG
SHEET NO.
C-4

XREFs: [CDMS_2234, W-SHADING, CDMS-003-SF INTERCEPTOR BRIDGE-FINAL-REV2, CEZ001SV, CEP0001, CWP001LS, CWP001YP, SWP001LS, EWP001ST, REVW_STAMP, CEP000SS] Images: []
Last saved by: KAJALEAN Time: 12/12/2023 11:07:46 PM
C:\pw_pl1\kajalean\d3867734\C004ESCP.dwg
© 2023 CDM SMITH ALL RIGHTS RESERVED.
REUSE OF DOCUMENTS: THESE DOCUMENTS AND DESIGNS PROVIDED BY PROFESSIONAL SERVICE, INCORPORATED HEREIN, ARE THE PROPERTY OF CDM SMITH AND ARE NOT TO BE USED, IN WHOLE OR PART, FOR ANY OTHER PROJECT WITHOUT THE WRITTEN AUTHORIZATION OF CDM SMITH.
Plotted: 12/14/2023 12:40:28 PM

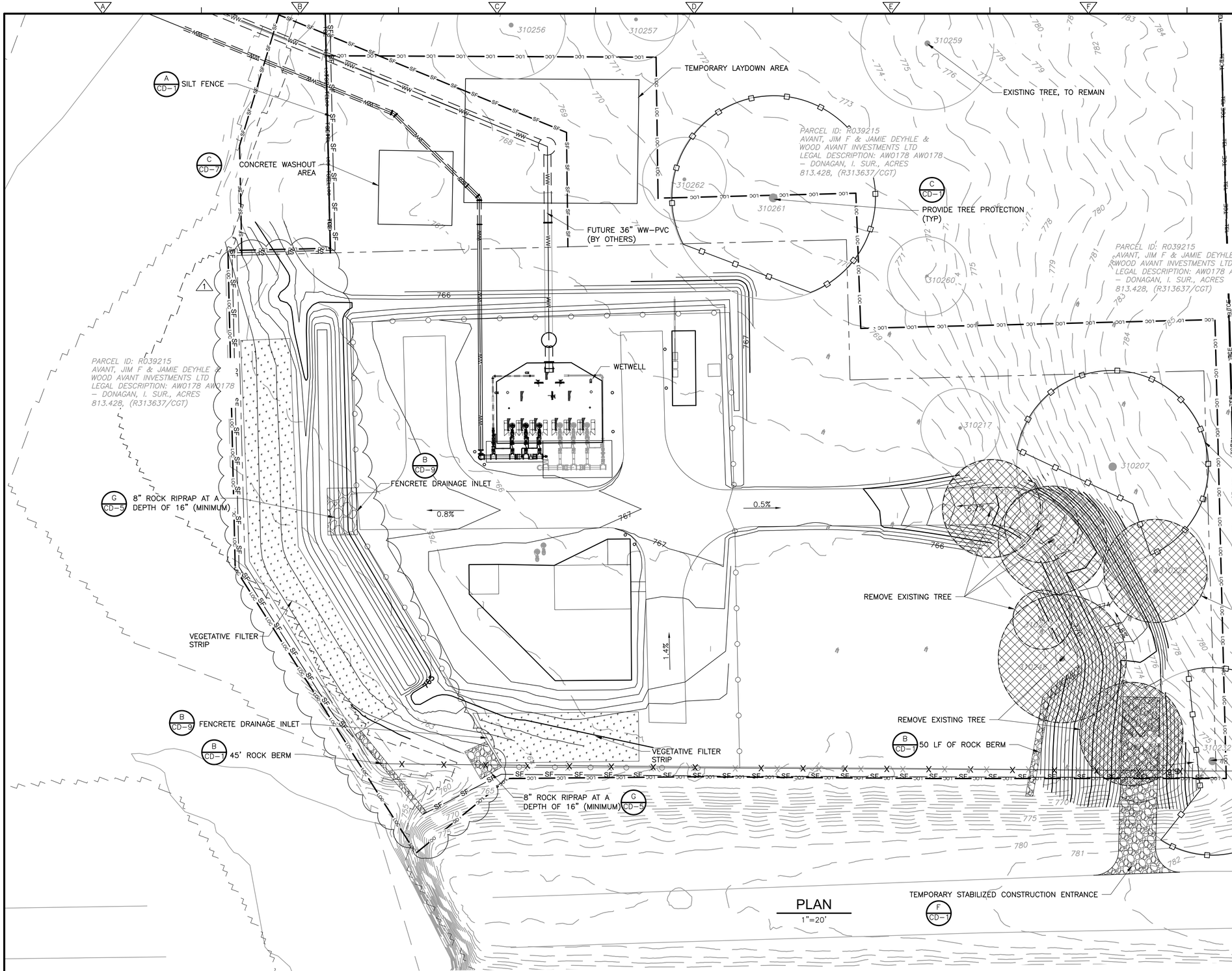

1" = 20'

NOTE:

1. THE SILT FENCING AND TEMPORARY EROSION CONTROL MEASUREMENTS SHALL BE INSTALLED BY THE CONTRACTOR IN ACCORDANCE WITH THE CONTRACTOR'S SWPPP. CONTRACTOR ALSO SHALL INSTALL TEMPORARY SILT FENCING ON THE WEST AND SOUTH OF THE PROPERTY ON THE OUTSIDE OF THE FENCE LINE DURING THE FENCING INSTALLATION ACTIVITIES. AFTER THE FENCING IS INSTALLED, THE SILT FENCE SHALL BE INSTALLED AS SHOWN.
2. CONTRACTOR SHALL FIELD COORDINATE THE LOCATIONS OF THE CONTRACTOR LAYDOWN AREA(S), TRAILER AREA(S), AND CONCRETE WASH DOWN AREA(S) WITH OWNER/OWNER REPRESENTATIVE. EXACT DIMENSIONS OF THE CONCRETE WASH SOWN AREA SHALL BE DETERMINED BY THE CONTRACTOR BASED ON THEIR POUR IMPLEMENTATION PLAN AND SUBMITTED TO THE OWNER /OWNER REPRESENTATIVE FOR REVIEW AND APPROVAL.
3. CONTRACTOR WILL BE RESPONSIBLE FOR KEEPING CEDAR BREAKS ROAD, D B WOOD ROAD, AND ADJACENT PROPERTIES FREE FROM SOIL, SEDIMENT, AND DEBRIS CREATED BY CONSTRUCTION ACTIVITY.
4. CONTRACTOR SHALL BE RESPONSIBLE FOR DUST CONTROL FOR THE SITE.
5. CONTRACTOR SHALL INSTALL ROCK BERM AT LOW POINT OF SILT FENCE.
6. TREES LESS THAN 6–INCHES DIAMETER ARE NOT SHOWN ON THE DRAWINGS.
7. (1) PRIOR TO CONSTRUCTION OF THE D B WOOD ACCESS DRIVE, CONTRACTOR SHALL FIELD VERIFY AND MATCH THE GRADE ELEVATION OF THE D B WOOD DRIVEWAY SECTION CONSTRUCTED BY OTHERS.

STATE OF TEXAS
GERALD S. FURRIER
129811
LICENSED PROFESSIONAL ENGINEER
12/11/2023

REV. NO.	DATE	DRWN	CHKD	REMARKS
1	1/9/24	AK	GF	ADDENDUM 2.

DESIGNED BY: A. KAJALE
DRAWN BY: S. DHANGAR
SHEET CHK'D BY: M. MAHADEVAN
CROSS CHK'D BY: A. RHAMES
APPROVED BY: G. FURRIER
DATE: DECEMBER 2023

CDM Smith
8310-1 N Capital of Texas Hwy, Suite 250
Austin, TX 78731
Tel: (512) 346-1100
TBPELS Firm Registration No. F-3043

CITY OF GEORGETOWN, TEXAS

CEDAR BREAKS AND D B WOOD LIFT STATIONS

D B WOOD LIFT STATION
TEMPORARY AND PERMANENT EROSION AND SEDIMENTATION CONTROL PLAN

PROJECT NO. 2048–272644
FILE NAME: C005ESCP.DWG

SHEET NO.
C-5

XREFs: [CDMS_2234, CEP000SS_1, CEP002SS, MWP002LS, SWP002LS, CWP002LS, EWP002ST, SWP004LS, CWP001YP, DBW_MDF_RDW, CWZ002GR, CEP000SS] Images: []
Last saved by: MAHADEVANM Time: 12/13/2023 1:34:02 PM
pw:\\cdmsmith-az02-pw.bentley.com:pw_pi1\2048\272644\04 Design Services NM_50%\02 Civil\10 BIM_CADD\Lift Stations\C005ESCP.dwg
©2023 CDM SMITH ALL RIGHTS RESERVED
REUSE OF DOCUMENTS: THESE DOCUMENTS AND DESIGNS PROVIDED BY PROFESSIONAL SERVICE, INCORPORATED HEREIN, ARE THE PROPERTY OF CDM SMITH AND ARE NOT TO BE USED, IN WHOLE OR PART, FOR ANY OTHER PROJECT WITHOUT THE WRITTEN AUTHORIZATION OF CDM SMITH.

Plotted: 5/16/2024 4:58:49 PM

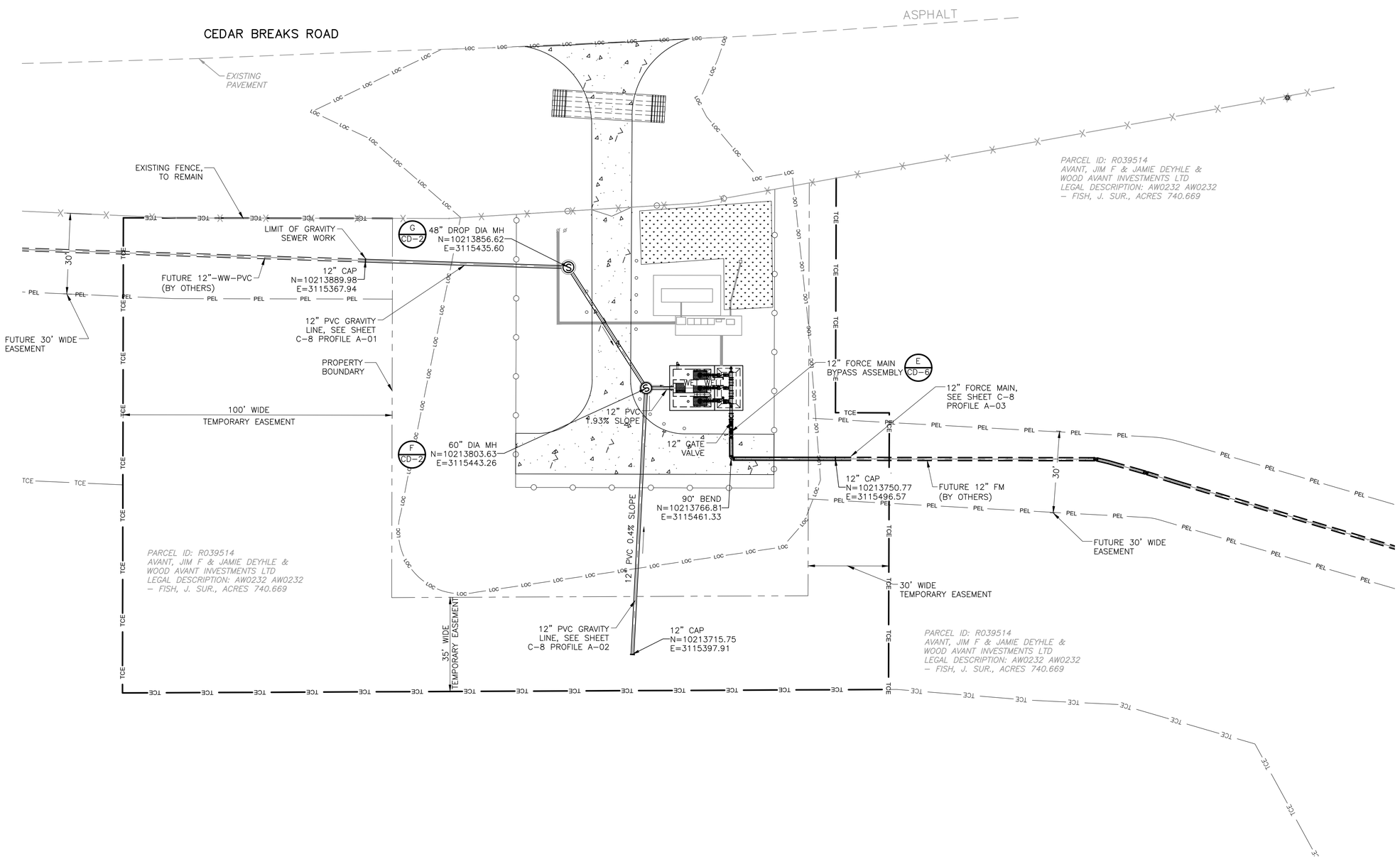

NOTES:

1. ALL FORCE MAIN PIPE, VALVES AND FITTINGS SHALL BE RESTRAINED.
2. INSTALL 12 INCH CAP AS WELL AS AN INDICATOR FOR THE PIPE LOCATION IF THE PROPOSED GRAVITY LINE AND FORCE MAIN IS NOT INSTALLED.
3. SEE SHEET C-8 FOR THE GRAVITY AND FORCE MAIN PROFILES.
4. SEE SHEET G-6 FOR BENCHMARKS AND PROJECT COORDINATE SYSTEM.
5. SEE SHEET C-4 FOR LIMITS OF TEMPORARY CONSTRUCTION EASEMENT, AND EROSION CONTROL MEASURES.
6. SEE SHEET C-10 FOR GRADING.

PLAN
1" = 20'

STATE OF TEXAS
GERALD S. FURRIER
129811
LICENSED
PROFESSIONAL ENGINEER
12/11/2023

REV. NO.	DATE	DRWN	CHKD	REMARKS

DESIGNED BY: A. KAJALE
DRAWN BY: M. MAHADEVAN
SHEET CHK'D BY: A. KAJALE
CROSS CHK'D BY: A. RHAMES
APPROVED BY: G. FURRIER
DATE: DECEMBER 2023

CDM Smith
8310-1 N Capital of Texas Hwy, Suite 250
Austin, TX 78731
Tel: (512) 346-1100
TBPELS Firm Registration No. F-3043

CITY OF GEORGETOWN, TEXAS

CEDAR BREAKS AND D B WOOD LIFT STATIONS

CEDAR BREAKS LIFT STATION
YARD PIPING PLAN

PROJECT NO. 2048-272644
FILE NAME: C006LSPL.DWG
SHEET NO.
C-6

XREFs: [CDMS_2234, W-SHADING, CDMS-003-SF INTERCEPTOR BRIDGE-FINAL-REV2, CEZ001SV, EWP001ST, CWP001YP, MWP001LS, CWP001LS, SWP001LS, CEP000SS, CWP001GR, CDMS_2234_South lake to South fork_Border] Images: []
Last saved by: MAKASHIA Time: 10/30/2023 1:22:28 PM
pw:\\cdmsmith-pw02-pw.bentley.com:pw_pi1\2048\272644\04 Design Services NM_50%\02 Civil\10 BIM_CADD\Lift Stations\C002LSPL.dwg
© 2023 CDM SMITH ALL RIGHTS RESERVED
REUSE OF DOCUMENTS: THESE DOCUMENTS AND DESIGNS PROVIDED BY PROFESSIONAL SERVICE, INCORPORATED HEREIN, ARE THE PROPERTY OF CDM SMITH AND ARE NOT TO BE USED, IN WHOLE OR PART, FOR ANY OTHER PROJECT WITHOUT THE WRITTEN AUTHORIZATION OF CDM SMITH.

Plotted: 12/14/2023 12:01:47 PM

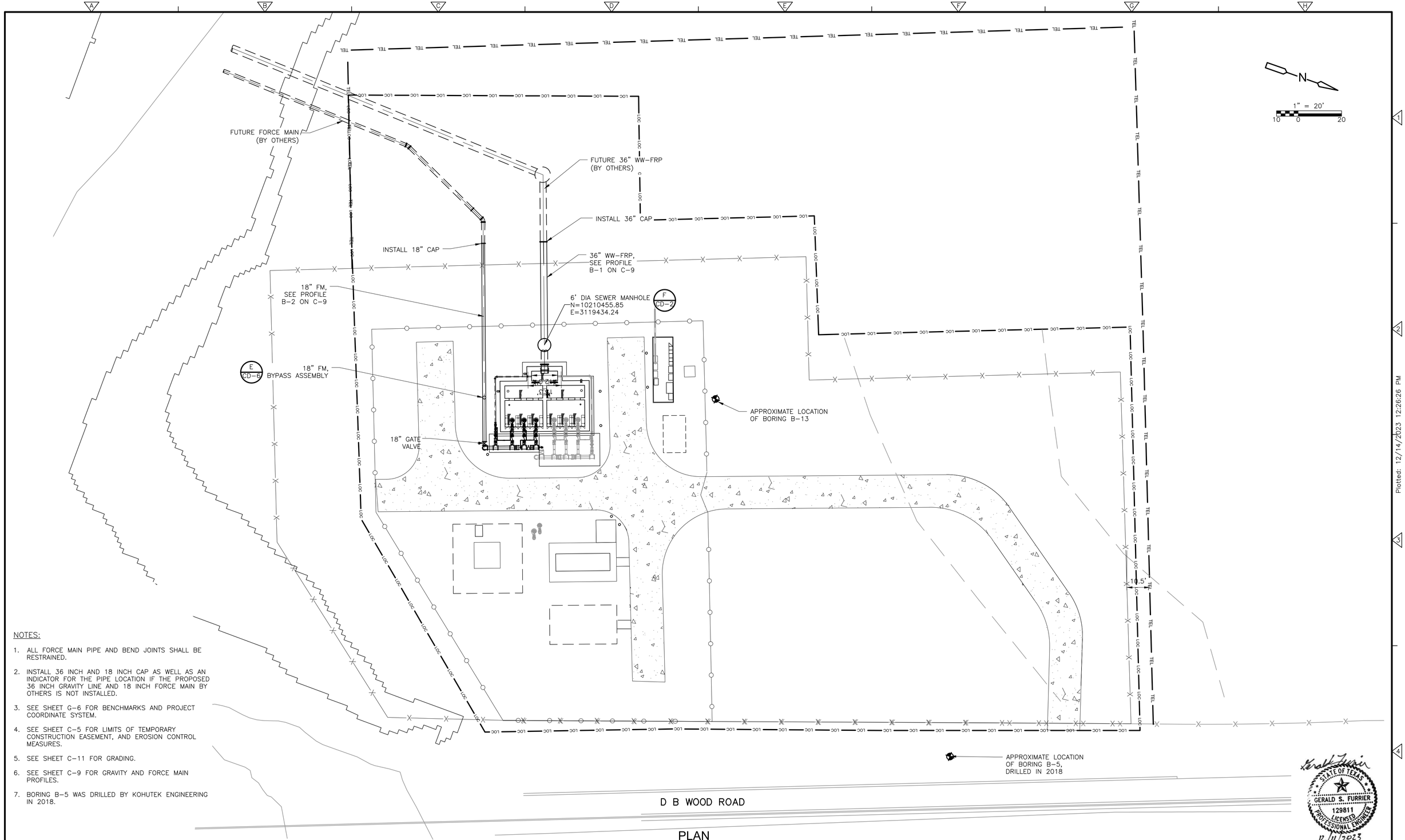

NOTES:

1. ALL FORCE MAIN PIPE AND BEND JOINTS SHALL BE RESTRAINED.
2. INSTALL 36 INCH AND 18 INCH CAP AS WELL AS AN INDICATOR FOR THE PIPE LOCATION IF THE PROPOSED 36 INCH GRAVITY LINE AND 18 INCH FORCE MAIN BY OTHERS IS NOT INSTALLED.
3. SEE SHEET G-6 FOR BENCHMARKS AND PROJECT COORDINATE SYSTEM.
4. SEE SHEET C-5 FOR LIMITS OF TEMPORARY CONSTRUCTION EASEMENT, AND EROSION CONTROL MEASURES.
5. SEE SHEET C-11 FOR GRADING.
6. SEE SHEET C-9 FOR GRAVITY AND FORCE MAIN PROFILES.
7. BORING B-5 WAS DRILLED BY KOHUTEK ENGINEERING IN 2018.

PLAN
1"=20'

STATE OF TEXAS
GERALD S. FURRIER
129811
LICENSED PROFESSIONAL ENGINEER
12/11/2023

REV. NO.	DATE	DRWN	CHKD	REMARKS

DESIGNED BY: A. KAJALE
DRAWN BY: M. KULKARNI
SHEET CHK'D BY: A. KAJALE
CROSS CHK'D BY: A RHAMES
APPROVED BY: G. FURRIER
DATE: DECEMBER 2023

CDM Smith
8310-1 N Capital of Texas Hwy, Suite 250
Austin, TX 78731
Tel: (512) 346-1100
TBPELS Firm Registration No. F-3043

CITY OF GEORGETOWN, TEXAS

CEDAR BREAKS AND D B WOOD LIFT STATIONS

D B WOOD LIFT STATION
YARD PIPING PLAN

PROJECT NO. 2048-272644
FILE NAME: C007YPPL.DWG
SHEET NO.
C-7

XREFs: [CDMS_2234, CEP0005S, MWP0002LS, EWP0002ST, CEP0002SS, SWP0006EP, SWP0002LS, CWP0002LS, SWP0041LS, CEP0041SS, Vehicle tracking, DBW_MDF_RDW] Images: []
Last saved by: MAKASHA Time: 10/30/2023 7:22:11 PM
C:\pw_pt\mukasha\3867734\C004YPPL.dwg
© 2023 CDM SMITH ALL RIGHTS RESERVED
REUSE OF DOCUMENTS: THESE DOCUMENTS AND DESIGNS PROVIDED BY PROFESSIONAL SERVICE, INCORPORATED HEREIN, ARE THE PROPERTY OF CDM SMITH AND ARE NOT TO BE USED, IN WHOLE OR PART, FOR ANY OTHER PROJECT WITHOUT THE WRITTEN AUTHORIZATION OF CDM SMITH.

Plotted: 12/14/2023 12:26:26 PM

1" = 20'
10 0 20
1" = 5'
2.5 0 5

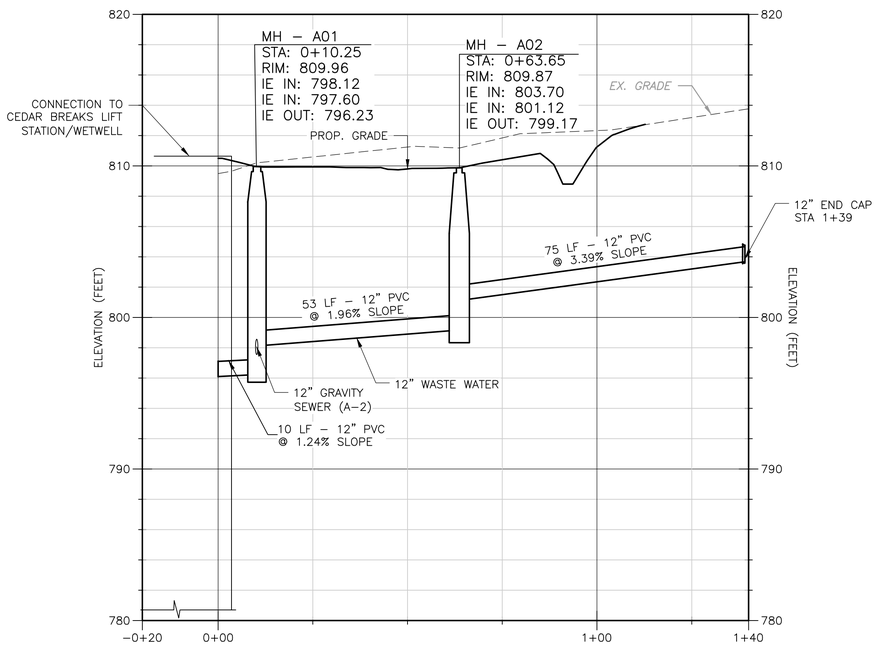

GRAVITY NETWORK PROFILE (A–01)
HOR 1" = 20'
VERT 1" = 5'

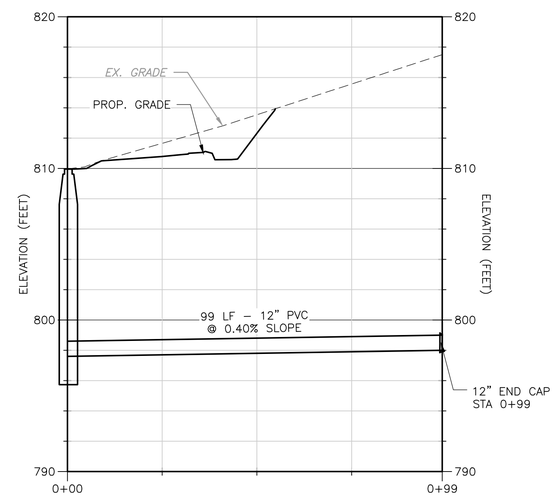

GRAVITY NETWORK PROFILE (A–02)
HOR 1" = 20'
VERT 1" = 5'

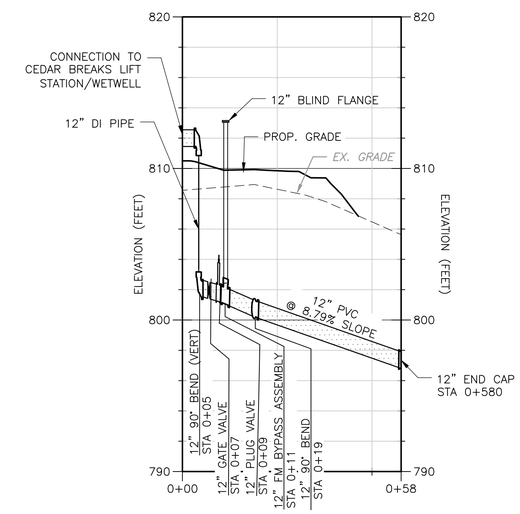

PRESSURE NETWORK PROFILE (A–03)
HOR 1" = 20'
VERT 1" = 5'

STATE OF TEXAS
GERALD S. FURRIER
129811
LICENSED
PROFESSIONAL ENGINEER
12/11/2023

REV. NO.	DATE	DRWN	CHKD	REMARKS

DESIGNED BY: L. VIDYAVATHI
DRAWN BY: M. MAHADEVAN
SHEET CHK'D BY: A. KAJALE
CROSS CHK'D BY: A. RHAMES
APPROVED BY: G. FURRIER
DATE: DECEMBER 2023

CDM Smith
8310-1 N Capital of Texas Hwy, Suite 250
Austin, TX 78731
Tel: (512) 346-1100
TBPELS Firm Registration No. F-3043

CITY OF GEORGETOWN, TEXAS

CEDAR BREAKS AND D B WOOD LIFT STATIONS

CEDAR BREAKS LIFT STATION
YARD PIPING PROFILE

PROJECT NO. 2048–272644
FILE NAME: C008YPPR.DWG
SHEET NO.
C-8

XREFs: [CDMS_2234, W-SHADING, CDMS-003-SF INTERCEPTOR BRIDGE-FINAL-REV2, CEZ001SV, EWP001ST, CWP001YP, SWP001LS, MWP001LS, CWP001LS, CWP002LS] Images: []
Last saved by: KAJALEAN Time: 12/13/2023 2:46:22 PM
C:\pw_pr1\kajalean\d386773A\C008YPPR.dwg
©2023 CDM SMITH ALL RIGHTS RESERVED.
REUSE OF DOCUMENTS: THESE DOCUMENTS AND DESIGNS PROVIDED BY PROFESSIONAL SERVICE, INCORPORATED HEREIN, ARE THE PROPERTY OF CDM SMITH AND ARE NOT TO BE USED, IN WHOLE OR PART, FOR ANY OTHER PROJECT WITHOUT THE WRITTEN AUTHORIZATION OF CDM SMITH.

Plotted: 12/14/2023 12:02:20 PM

1" = 20'
10 0 20
1" = 5'
2.5 0 5

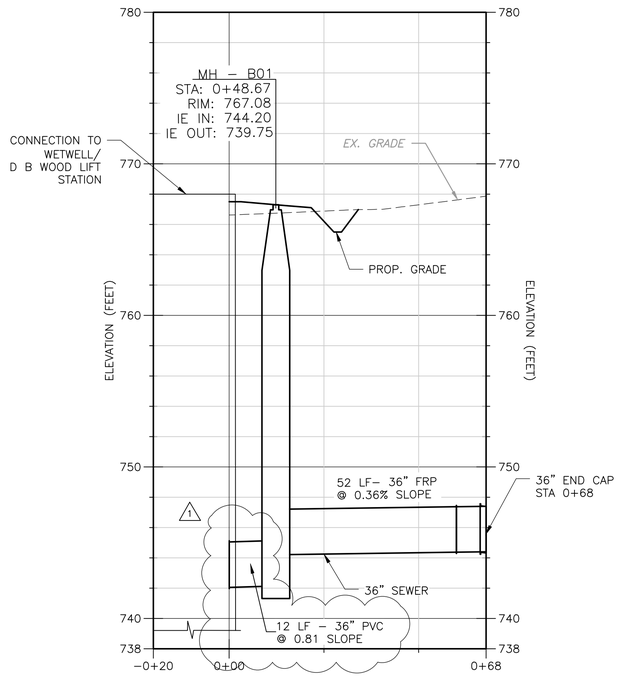

GRAVITY NETWORK PROFILE (B–1)
HOR 1" = 20'
VERT 1" = 5'

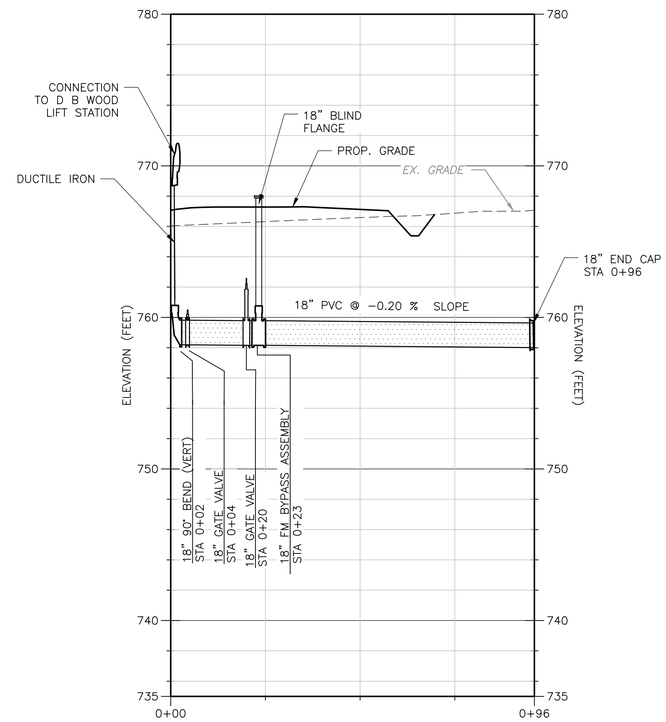

PRESSURE NETWORK PROFILE (B–2)
HOR 1" = 20'
VERT 1" = 5'

STATE OF TEXAS
GERALD S. FURRIER
129811
LICENSED
PROFESSIONAL ENGINEER
12/11/2023

REV. NO.	DATE	DRWN	CHKD	REMARKS
1	1/9/24	AK	GF	ADDENDUM 2

DESIGNED BY: L. VIDYAVATHI
DRAWN BY: M. MAHADEVAN
SHEET CHK'D BY: A. KAJALE
CROSS CHK'D BY: A. RHAMES
APPROVED BY: G. FURRIER
DATE: DECEMBER 2023

CDM Smith
8310-1 N Capital of Texas Hwy, Suite 250
Austin, TX 78731
Tel: (512) 346-1100
TBPELS Firm Registration No. F-3043

CITY OF GEORGETOWN, TEXAS

CEDAR BREAKS AND D B WOOD LIFT STATIONS

D B WOOD LIFT STATION
YARD PIPING PROFILE

PROJECT NO. 2048–272644
FILE NAME: C009YPPR.DWG

SHEET NO.
C-9

Plotted: 5/17/2024 11:48:13 AM

XREFs: [CDMS_2234, W-SHADING, CDMS-003-SF INTERCEPTOR BRIDGE-FINAL-REV2, CEZ001SV, ENP001ST, CWP001YP, SWP001LS, MWP001LS, CWP001LS, CWP002LS] Images: []
Last saved by: COYLEZ Time: 5/17/2024 11:47:30 AM
pw:\\cdmsmith-az02-pw.bentley.com:pw_pi\2048\272644\04 Design Services NM_50%\02 Civil\10 BIM_CADD\Lift Stations\C009YPPR.dwg
© 2023 CDM SMITH ALL RIGHTS RESERVED.
REUSE OF DOCUMENTS: THESE DOCUMENTS AND DESIGNS PROVIDED BY PROFESSIONAL SERVICE, INCORPORATED HEREIN, ARE THE PROPERTY OF CDM SMITH AND ARE NOT TO BE USED, IN WHOLE OR PART, FOR ANY OTHER PROJECT WITHOUT THE WRITTEN AUTHORIZATION OF CDM SMITH.

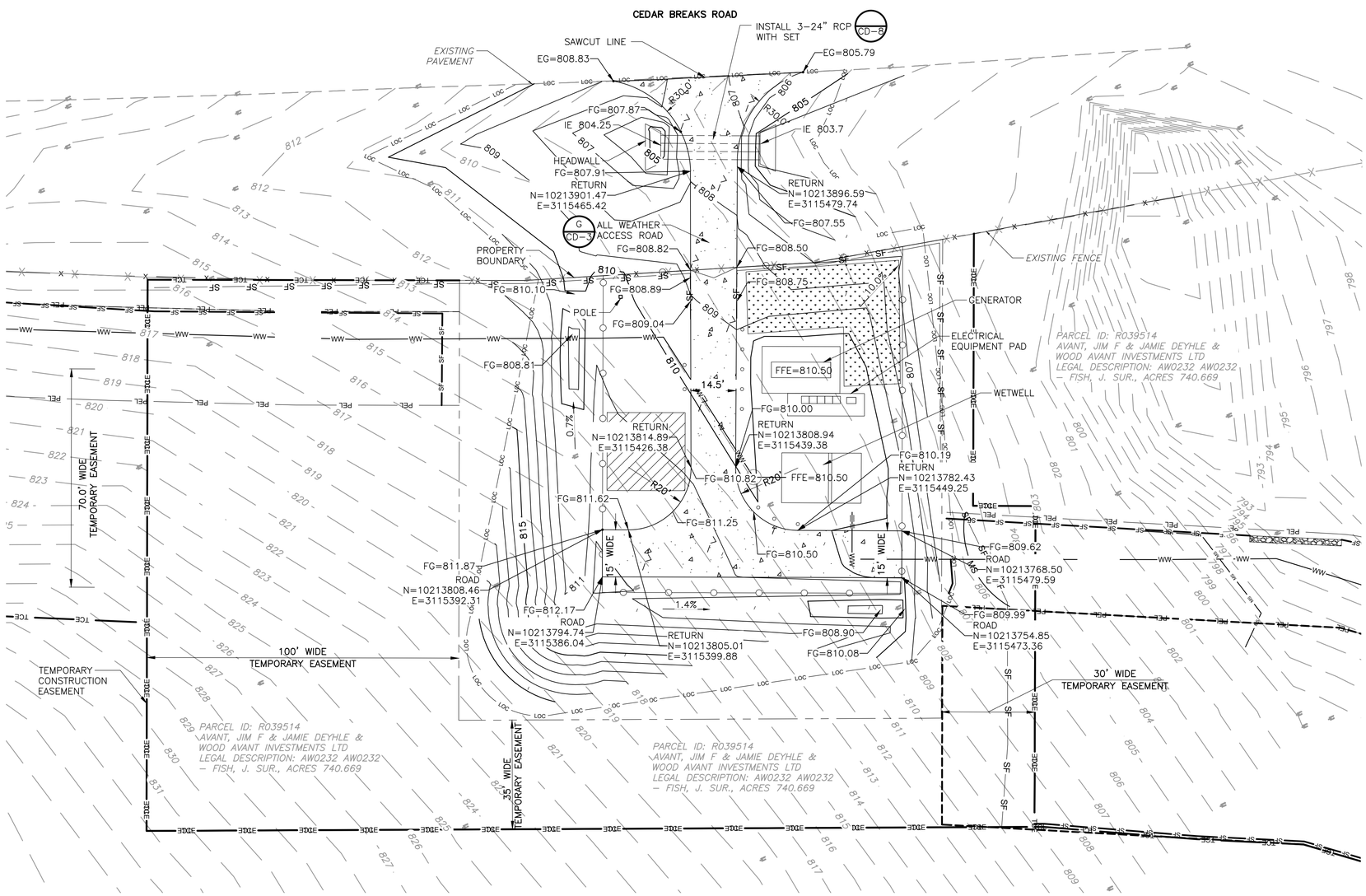

PLAN
1"=20'

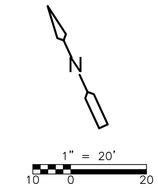

NOTE:

1. FOR EXPANSION JOINT, CONTRACTION JOINT, CONCRETE PAVING SECTION, AND CONSTRUCTION JOINT DETAILS, SEE DETAIL E THROUGH H ON SHEET CD-3.
2. CONTRACTOR SHALL INSTALL A GEOTEXTILE (WEED BARRIER) AND 4" THICK MINIMUM NO. 57 CRUSHED STONE SURFACE FOR ALL AREAS WITHIN THE FENCECRETE FENCE AND OUTSIDE OF STRUCTURES.
3. PRIOR TO CONSTRUCTION OF THE DRIVEWAY AT THE CEDAR BREAKS ROAD LIFT STATION, THE CONTRACTOR SHALL PREPARE AND SUBMIT A TRAFFIC CONTROL PLAN TO THE ENGINEER FOR REVIEW.

LEGENDS:

EG EXISTING GRADE
FG FINISHED GRADE

STATE OF TEXAS
GERALD S. FURRIER
129811
LICENSED PROFESSIONAL ENGINEER
12/11/2023

REV. NO.	DATE	DRWN	CHKD	REMARKS
1	1/9/24	AK	GF	ADDENDUM 2.

DESIGNED BY: A. KAJALE
DRAWN BY: S. DHANGAR
SHEET CHK'D BY: M. MAHADEVAN
CROSS CHK'D BY: A. RHAMES
APPROVED BY: G. FURRIER
DATE: DECEMBER 2023

CDM Smith
8310-1 N Capital of Texas Hwy, Suite 250
Austin, TX 78731
Tel: (512) 346-1100
TBPELS Firm Registration No. F-3043

CITY OF GEORGETOWN, TEXAS
CEDAR BREAKS AND D B WOOD LIFT STATIONS

CEDAR BREAKS LIFT STATION
PAVING AND GRADING PLAN

PROJECT NO. 2048-272644
FILE NAME: C010GRPL.DWG
SHEET NO.
C-10

Plotted: 5/16/2024 5:46:51 PM

XREFs: [CDMS_2234, W-SHADING, CDMS-003-SF INTERCEPTOR BRIDGE-FINAL-REV2, CEZ001SV, CEP0001, CWP001LS, CWP001YP, SWP001LS, EWP001ST, REVW_STAMP, CEP000SS] Images: []
Last saved by: KAJALEAN Time: 4/26/2024 10:31:35 AM
C:\pw_pl1\kajalean\d3867734\C010GRPL.dwg
©2023 CDM SMITH ALL RIGHTS RESERVED.
REUSE OF DOCUMENTS: THESE DOCUMENTS AND DESIGNS PROVIDED BY PROFESSIONAL SERVICE, INCORPORATED HEREIN, ARE THE PROPERTY OF CDM SMITH AND ARE NOT TO BE USED, IN WHOLE OR PART, FOR ANY OTHER PROJECT WITHOUT THE WRITTEN AUTHORIZATION OF CDM SMITH.

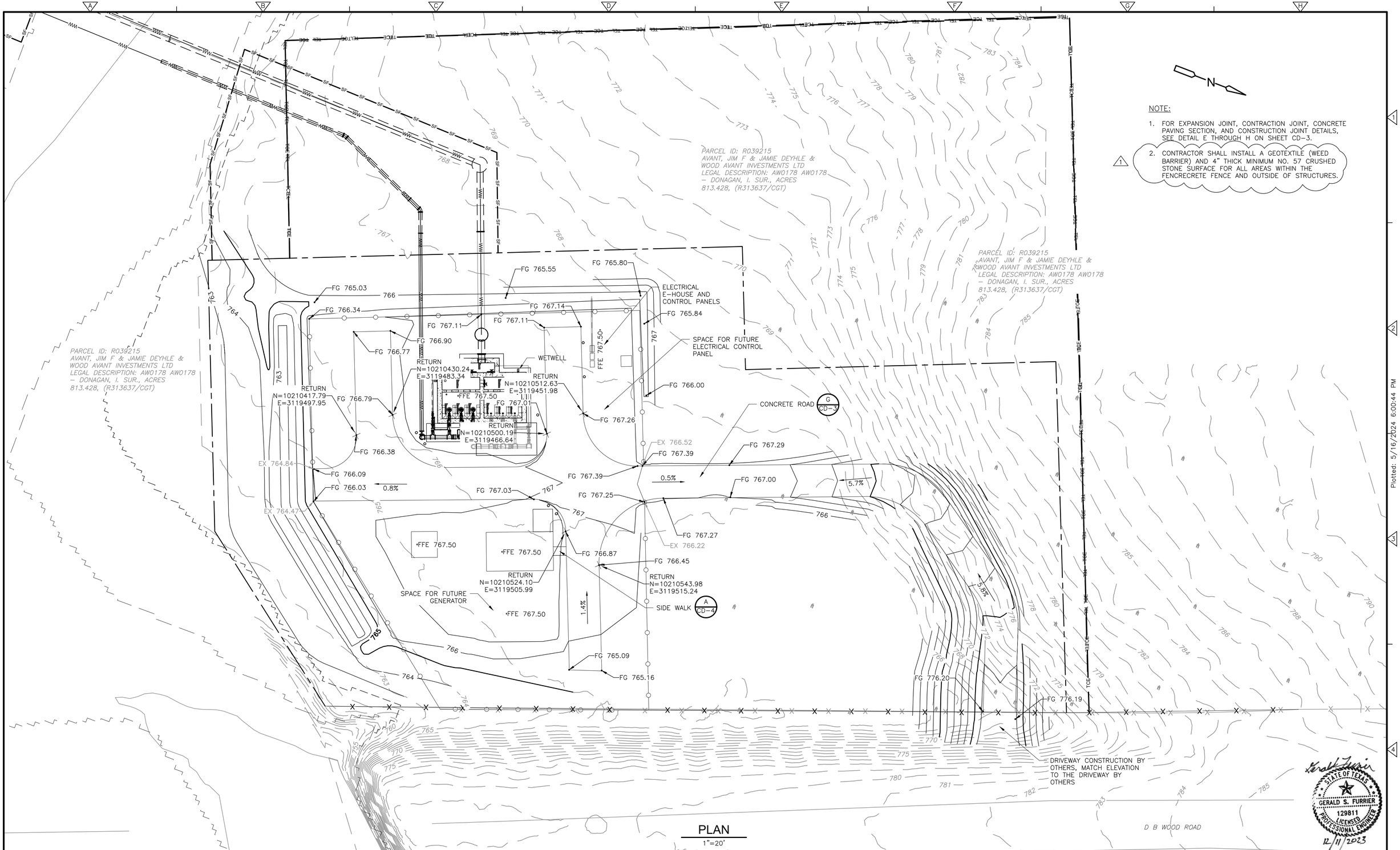

NOTE:

1. FOR EXPANSION JOINT, CONTRACTION JOINT, CONCRETE PAVING SECTION, AND CONSTRUCTION JOINT DETAILS, SEE DETAIL E THROUGH H ON SHEET CD-3.
2. CONTRACTOR SHALL INSTALL A GEOTEXTILE (WEED BARRIER) AND 4" THICK MINIMUM NO. 57 CRUSHED STONE SURFACE FOR ALL AREAS WITHIN THE FENCRECRETE FENCE AND OUTSIDE OF STRUCTURES.

PLAN
1"=20'

STATE OF TEXAS
GERALD S. FURRIER
129811
LICENSED
PROFESSIONAL ENGINEER
12/11/2023

REV. NO.	DATE	DRWN	CHKD	REMARKS
1	1/9/24	AK	GF	ADDENDUM 2.

DESIGNED BY: A. KAJALE
DRAWN BY: S. BHAKARI
SHEET CHK'D BY: M. MAHADEVAN
CROSS CHK'D BY: A. RHAMES
APPROVED BY: G. FURRIER
DATE: DECEMBER 2023

CDM Smith
8310-1 N Capital of Texas Hwy, Suite 250
Austin, TX 78731
Tel: (512) 346-1100
TBPELS Firm Registration No. F-3043

CITY OF GEORGETOWN, TEXAS

CEDAR BREAKS AND D B WOOD LIFT STATIONS

D B WOOD LIFT STATION
PAVING AND GRADING PLAN

PROJECT NO. 2048-272644
FILE NAME: C011GRPL.DWG
SHEET NO.
C-11

XREFs: [CDMS_2234, CEP000SS_1, CEP002SS, MWP002LS, SWP002LS, CWP002LS, EWP002ST, SWP004LS, CWP001YP, DBW_MDF_RDW, CWZ002GR, CEP000SS, CDMS-003-S Lake to SF Interceptor-TOPO-SURF] Images: []
Last saved by: KAJALEAN Time: 4/26/2024 10:47:08 AM
C:\pw_pl1\kajalean\d3867734\C011GRPL.dwg
©2023 CDM SMITH ALL RIGHTS RESERVED.
REUSE OF DOCUMENTS: THESE DOCUMENTS AND DESIGNS PROVIDED BY PROFESSIONAL SERVICE, INCORPORATED HEREIN, ARE THE PROPERTY OF CDM SMITH AND ARE NOT TO BE USED, IN WHOLE OR PART, FOR ANY OTHER PROJECT WITHOUT THE WRITTEN AUTHORIZATION OF CDM SMITH.

Plotted: 5/16/2024 6:00:44 PM

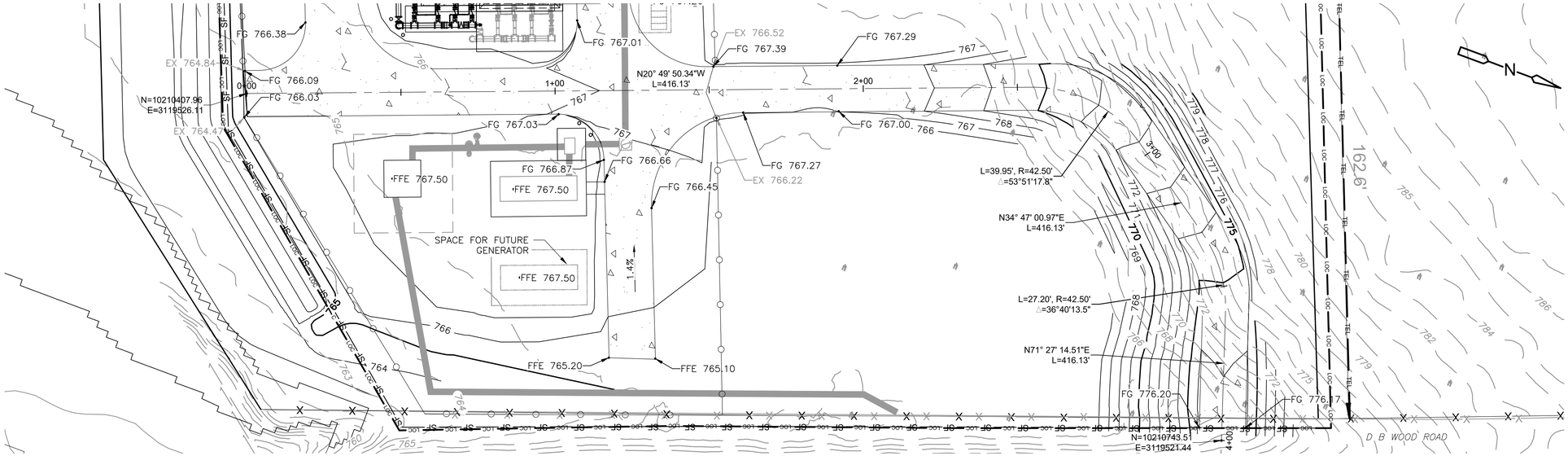

PLAN

1"=20'

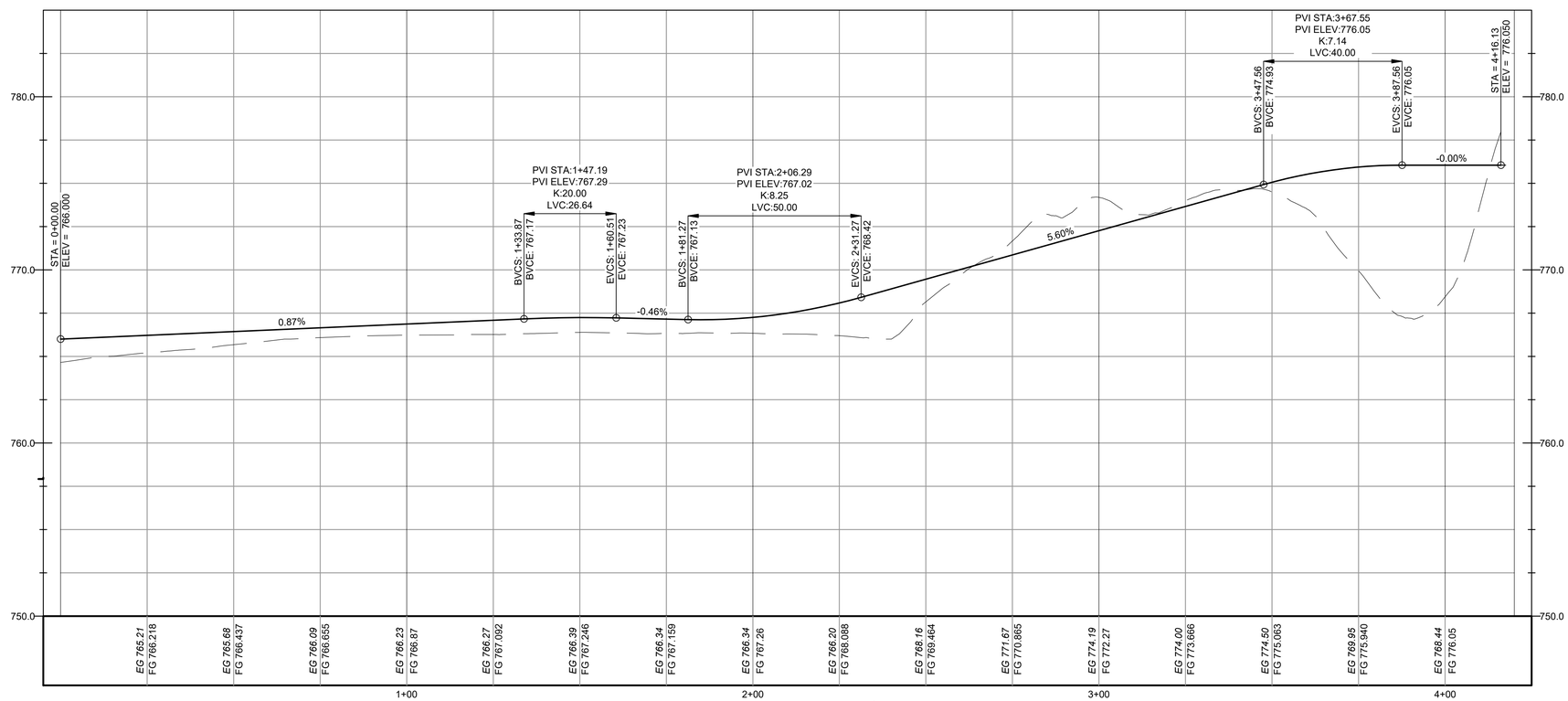

PROFILE

V 1" = 4'
H 1" = 20'

STATE OF TEXAS
GERALD S. FURRIER
129811
LICENSED
PROFESSIONAL ENGINEER
12/11/2023

REV. NO.	DATE	DRWN	CHKD	REMARKS

DESIGNED BY: A. KAJALE
DRAWN BY: M. KULKARNI
SHEET CHK'D BY: M. MAHADEVAN
CROSS CHK'D BY: A. RHAMES
APPROVED BY: G. FURRIER
DATE: DECEMBER 2023

CDM Smith
8310-1 N Capital of Texas Hwy, Suite 250
Austin, TX 78731
Tel: (512) 346-1100
TBPELS Firm Registration No. F-3043

CITY OF GEORGETOWN, TEXAS

CEDAR BREAKS AND D B WOOD LIFT STATIONS

D B WOOD LIFT STATION
PAVING PLAN

PROJECT NO. 2048-272644
FILE NAME: C012PVPP.DWG
SHEET NO.
C-12

XREFs: [CDMS_2234, CEP000SS_1, CEP002SS, MWP002LS, SWP002LS, CWP002LS, EWP002ST, SWP004LS, CWP001YP, CEP000SS, CWZ002GR, CEP004SS] Images: []
Last saved by: BOCANEGRAA Time: 12/14/2023 11:30:48 AM
pw:\\cdmsmith-az02-pw.bentley.com:pw_pl1\2048\272644\04 Design Services NM_50%\02 Civil\10 BIM_CADD\Lift Stations\C012PVPP.dwg
©2023 CDM SMITH ALL RIGHTS RESERVED.
REUSE OF DOCUMENTS: THESE DOCUMENTS AND DESIGNS PROVIDED BY PROFESSIONAL SERVICE, INCORPORATED HEREIN, ARE THE PROPERTY OF CDM SMITH AND ARE NOT TO BE USED, IN WHOLE OR PART, FOR ANY OTHER PROJECT WITHOUT THE WRITTEN AUTHORIZATION OF CDM SMITH.

Plotted: 12/14/2023 12:51:50 PM

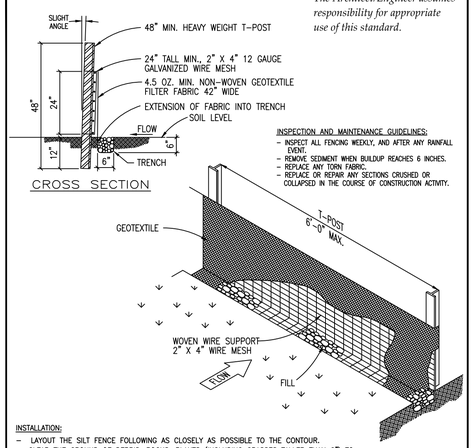

INSPECTION AND MAINTENANCE GUIDELINES:
- INSPECT ALL FENCING WEEKLY, AND AFTER ANY RAINFALL EVENT.
- REMOVE SEDIMENT WHEN BUILDUP REACHES 6 INCHES.
- REPLACE ANY TORN FABRIC.
- REPLACE OR REPAIR ANY SECTIONS CRUSHED OR COLLAPSED IN THE COURSE OF CONSTRUCTION ACTIVITY.

INSTALLATION:
- LAYOUT THE SILT FENCE FOLLOWING AS CLOSELY AS POSSIBLE TO THE CONTOUR.
- CLEAR THE GROUND OF DEBRIS, ROCKS, PLANTS (INCLUDING GRASSES TALLER THAN 2") TO PROVIDE A SMOOTH FLOW APPROACH SURFACE. EXCAVATE 6" DEEP X 6" WIDE TRENCH ON UPSTREAM SIDE OF FACE PER PLANS.
- DRIVE THE HEAVY DUTY T-POST AT LEAST 12 INCHES INTO THE GROUND AND AT A SLIGHT ANGLE TOWARDS THE FLOW.
- ATTACH THE 2" X 4" 12 GAUGE WELDED WIRE MESH TO THE T-POST WITH 11 1/2 GAUGE GALVANIZED T-POST CLIPS. THE TOP OF THE WIRE TO BE 24" ABOVE GROUND LEVEL. THE WELDED WIRE MESH TO BE OVERLAPPED 6" AND TIED AT LEAST 6 TIMES WITH HOG RINGS.
- THE SILT FENCE TO BE INSTALLED WITH A SKIRT A MINIMUM OF 6" WIDE PLACED ON THE UPHILL SIDE OF THE FENCE INSIDE EXCAVATED TRENCH. THE FABRIC TO OVERLAP THE TOP OF THE WIRE BY 1".
- ANCHOR THE SILT FENCE BY BACKFILLING WITH EXCAVATED DIRT AND ROCKS (NOT LARGER THAN 2").
- GEOTEXTILE SPLICES SHOULD BE A MINIMUM OF 18" WIDE ATTACHED IN AT LEAST 6 PLACES. SPLICES IN CONCENTRATED FLOW AREAS WILL NOT BE ACCEPTED.
- SILT FENCE SHALL BE REMOVED WHEN THE SITE IS COMPLETELY STABILIZED SO AS NOT TO BLOCK OR IMPEDE STORM FLOW OR DRAINAGE.

The Architect/Engineer assumes responsibility for appropriate use of this standard.

REVISION NOTE: ADOPTED 6/21/2006

CITY OF GEORGETOWN
CONSTRUCTION STANDARDS AND DETAILS
SILT FENCE DETAIL

DRAWING NAME: EC02 | SCALE: NTS | DATE: 1/2003 | DRAWN BY: MRS | APPROVED BY: TRB

DETAIL A
NTS

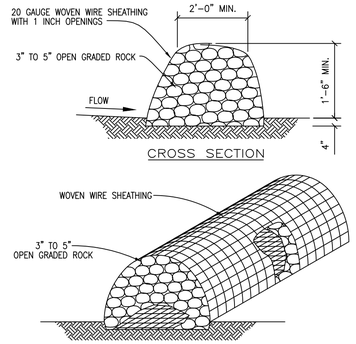

INSTALLATION:
- LAYOUT THE ROCK BERM FOLLOWING AS CLOSELY AS POSSIBLE TO THE CONTOUR.
- CLEAR THE GROUND OF DEBRIS, ROCKS OR PLANTS THAT WILL INTERFERE WITH INSTALLATION.
- PLACE WOVEN WIRE FABRIC ON THE GROUND ALONG THE PROPOSED INSTALLATION WITH ENOUGH OVERLAP TO COMPLETELY ENCIRCLE THE FINISHED SIZE OF THE BERM.
- PLACE THE ROCK ALONG THE CENTER OF THE WIRE TO THE DESIGNATED HEIGHT.
- WRAP THE STRUCTURE WITH THE PREVIOUSLY PLACED WIRE MESH SECURE ENOUGH SO THAT WHEN WALKED ACROSS THE STRUCTURE RETAINS IT'S SHAPE.
- SECURE WITH TIE WIRE.
- THE ENDS OF THE BERM SHOULD BE TIED INTO EXISTING UPSLOPE GRADE AND THE BERM SHOULD BE BURIED IN A TRENCH APPROX. 4 INCHES DEEP TO PREVENT FAILURE OF THE CONTROL.
- THE ROCK BERM SHOULD BE LEFT IN PLACE UNTIL ALL UPSTREAM AREAS ARE STABILIZED AND ACCUMULATED SILT REMOVED.

INSPECTION AND MAINTENANCE GUIDELINES:
- INSPECTION SHOULD BE MADE WEEKLY AND AFTER EACH RAINFALL EVENT BY THE RESPONSIBLE PARTY. FOR INSTALLATIONS IN STREAMBEDS, ADDITIONAL DAILY INSPECTIONS SHOULD BE MADE.
- REMOVE SEDIMENT AND OTHER DEBRIS WHEN BUILDUP REACHES 6 INCHES AND DISPOSE OF THE ACCUMULATED SILT IN AN APPROVED MANNER.
- REPAIR ANY LOOSE WIRE SHEATHING.
- THE BERM SHOULD BE RESHAPED AS NEEDED DURING INSPECTION.
- THE BERM SHOULD BE REPLACED WHEN THE STRUCTURE CEASES TO FUNCTION AS INTENDED DUE TO SILT ACCUMULATION AMONG THE ROCKS, WASHOUT, CONSTRUCTION TRAFFIC DAMAGE, ETC.

The Architect/Engineer assumes responsibility for appropriate use of this standard.

REVISION NOTE: ADOPTED 6/21/2006

CITY OF GEORGETOWN
CONSTRUCTION STANDARDS AND DETAILS
ROCK BERM DETAIL

DRAWING NAME: EC03 | SCALE: NTS | DATE: 1/2003 | DRAWN BY: MRS | APPROVED BY: TRB

DETAIL B
NTS

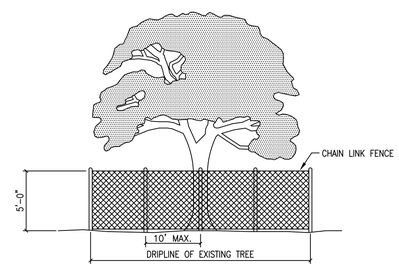

NOTES:
1. TREE PROTECTION FENCES SHALL BE INSTALLED PRIOR TO THE COMMENCEMENT OF ANY SITE PREPARATION WORK (CLEARING, GRUBBING OR GRADING).
2. FENCES SHALL COMPLETELY SURROUND THE TREE, OR CLUSTERS OF TREES; WILL BE LOCATED AT THE OUTERMOST LIMIT OF THE TREE BRANCHES (DRIPLINE), AND WILL BE MAINTAINED THROUGHOUT THE CONSTRUCTION PROJECT IN ORDER TO PREVENT THE FOLLOWING:
   A. SOIL COMPACTION IN THE ROOT ZONE AREA RESULTING FROM VEHICULAR TRAFFIC, OR STORAGE OF EQUIPMENT OR MATERIALS.
   B. ROOT ZONE DISTURBANCES DUE TO GRADE CHANGES (GREATER THAN SIX INCHES (6") CUT OR FILL, OR TRENCHING NOT REVIEWED AND AUTHORIZED BY THE CITY.
   C. WOUNDS TO EXPOSED ROOTS, TRUNKS OR LIMBS BY MECHANICAL EQUIPMENT.
   D. OTHER ACTIVITIES DETRIMENTAL TO TREES, SUCH AS CHEMICAL STORAGE, CEMENT TRUCK CLEANING AND FIRE.
3. EXCEPTIONS TO INSTALLING FENCES AT TREE DRIPLINES MAY BE PERMITTED IN THE FOLLOWING CASES:
   A. WHERE PERMEABLE PAVING IS TO BE INSTALLED, ERECT THE FENCE AT THE OUTER LIMITS OF THE PERMEABLE PAVING AREA.
   B. WHERE TREES ARE CLOSE TO PROPOSED BUILDINGS, ERECT THE FENCE NO CLOSER THAN SIX FEET (6'-0") TO BUILDING.

The Architect/Engineer assumes responsibility for appropriate use of this standard.

REVISION NOTE: ADOPTED 6/21/2006

CITY OF GEORGETOWN
CONSTRUCTION STANDARDS AND DETAILS
TREE PROTECTION – CHAIN LINK FENCE

DRAWING NAME: EC09 | SCALE: NTS | DATE: 1/2003 | DRAWN BY: MRS | APPROVED BY: TRB

DETAIL C
NTS

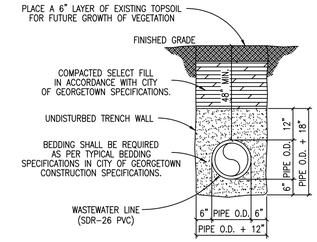

TRENCH WIDTHS
*PIPE LESS THAN 20" DIAMETER
1'-0" + PIPE O.D.
*20" DIAMETER PIPE AND LARGER
2'-0" + PIPE O.D.

The Architect/Engineer assumes responsibility for appropriate use of this standard.

REVISION NOTE: ADOPTED 6/21/2006

CITY OF GEORGETOWN
CONSTRUCTION STANDARDS AND DETAILS
TRENCH AND EMBEDMENT DETAIL UNDER NON-PAVED AREAS

DRAWING NAME: WW16 | SCALE: NTS | DATE: 1/2003 | DRAWN BY: MRS | APPROVED BY: TRB

DETAIL D
NTS

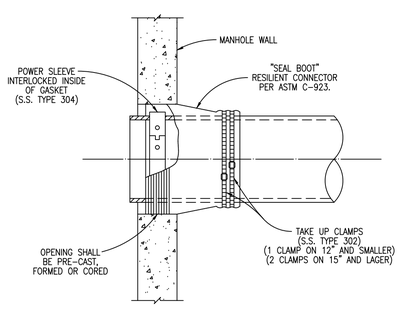

The Architect/Engineer assumes responsibility for appropriate use of this standard.

REVISION NOTE: ADOPTED 6/21/2006

CITY OF GEORGETOWN
CONSTRUCTION STANDARDS AND DETAILS
FLEXIBLE "SEAL BOOT" CONNECTOR

DRAWING NAME: WW10 | SCALE: NTS | DATE: 1/2003 | DRAWN BY: MRS | APPROVED BY: TRB

DETAIL E
NTS

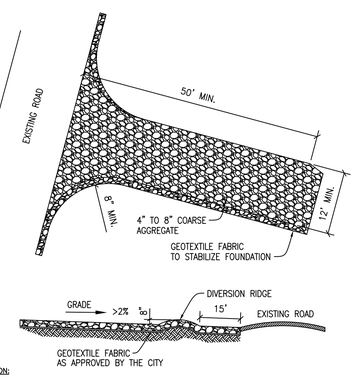

INSTALLATION:
- CLEAR THE AREA OF DEBRIS, ROCKS OR PLANTS THAT WILL INTERFERE WITH INSTALLATION.
- GRADE THE AREA FOR THE ENTRANCE TO FLOW BACK ON TO THE CONSTRUCTION SITE. RUNOFF FROM THE STABILIZED CONSTRUCTION
- PLACE GEOTEXTILE FABRIC AS APPROVED BY THE CITY.
- PLACE ROCK AS APPROVED BY THE CITY.

INSPECTIONS AND MAINTENANCE GUIDELINES:
- THE ENTRANCE SHOULD BE MAINTAINED IN A CONDITION, WHICH WILL PREVENT TRACKING OR FLOWING OF SEDIMENT ONTO PUBLIC RIGHTS-OF-WAY. THIS MAY REQUIRE PERIODIC TOP DRESSING WITH ADDITIONAL STONE AS CONDITIONS DEMAND AND REPAIR AND/OR CLEANOUT OF ANY MEASURES USED TO TRAP SEDIMENT.
- ALL SEDIMENT SPILLED, DROPPED, WASHED OR TRACKED ON TO PUBLIC RIGHTS-OF-WAY SHOULD BE REMOVED IMMEDIATELY BY CONTRACTOR.
- WHEN NECESSARY, WHEELS SHOULD BE CLEANED TO REMOVE SEDIMENT PRIOR TO ENTRANCE ONTO PUBLIC RIGHTS-OF-WAY.
- WHEN WASHING IS REQUIRED, IT SHOULD BE DONE ON AN AREA STABILIZED WITH CRUSHED STONE THAT DRAINS INTO AN APPROVED SEDIMENT TRAP OR SEDIMENT BASIN.
- ALL SEDIMENT SHOULD BE PREVENTED FROM ENTERING ANY STORM DRAIN, DITCH OR WATER COURSE BY USING APPROVED METHODS.

The Architect/Engineer assumes responsibility for appropriate use of this standard.

REVISION NOTE: ADOPTED 6/21/2006

CITY OF GEORGETOWN
CONSTRUCTION STANDARDS AND DETAILS
STABILIZED CONSTRUCTION ENTRANCE

DRAWING NAME: EC06 | SCALE: NTS | DATE: 1/2003 | DRAWN BY: MRS | APPROVED BY: TRB

DETAIL F
NTS

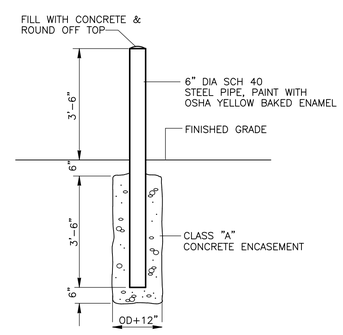

BOLLARD

DETAIL G
NTS

STATE OF TEXAS
GERALD S. FURRIER
129811
LICENSED
PROFESSIONAL ENGINEER
12/11/2023

REV. NO.	DATE	DRWN	CHKD	REMARKS

DESIGNED BY: A. KAJALE
DRAWN BY: S. DHANGAR
SHEET CHK'D BY: M. MAHADEVAN
CROSS CHK'D BY: A. KAJALE
APPROVED BY: G. FURRIER
DATE: DECEMBER 2023

CDM Smith
8310-1 N Capital of Texas Hwy, Suite 250
Austin, TX 78731
Tel: (512) 346-1100
TBPELS Firm Registration No. F-3043

CITY OF GEORGETOWN, TEXAS

CEDAR BREAKS AND D B WOOD LIFT STATIONS

CIVIL STANDARD DETAILS I

PROJECT NO. 2048-272644
FILE NAME: C001STDT
SHEET NO.
CD-1

XREFs: [REVW, G-FURRIER, South lake to South fork_Border] Images: []
Last saved by: MAHADEVANM, Time: 12/13/2023 6:48:43 PM
C:\pw_pt\MAHADEVANM\d3908821\C008STDT.dwg
© 2023 CDM SMITH ALL RIGHTS RESERVED.
REUSE OF DOCUMENTS: THESE DOCUMENTS AND DESIGNS PROVIDED BY PROFESSIONAL SERVICE, INCORPORATED HEREIN, ARE THE PROPERTY OF CDM SMITH AND ARE NOT TO BE USED, IN WHOLE OR PART, FOR ANY OTHER PROJECT WITHOUT THE WRITTEN AUTHORIZATION OF CDM SMITH.
Plotted: 12/13/2023 2:44:24 PM

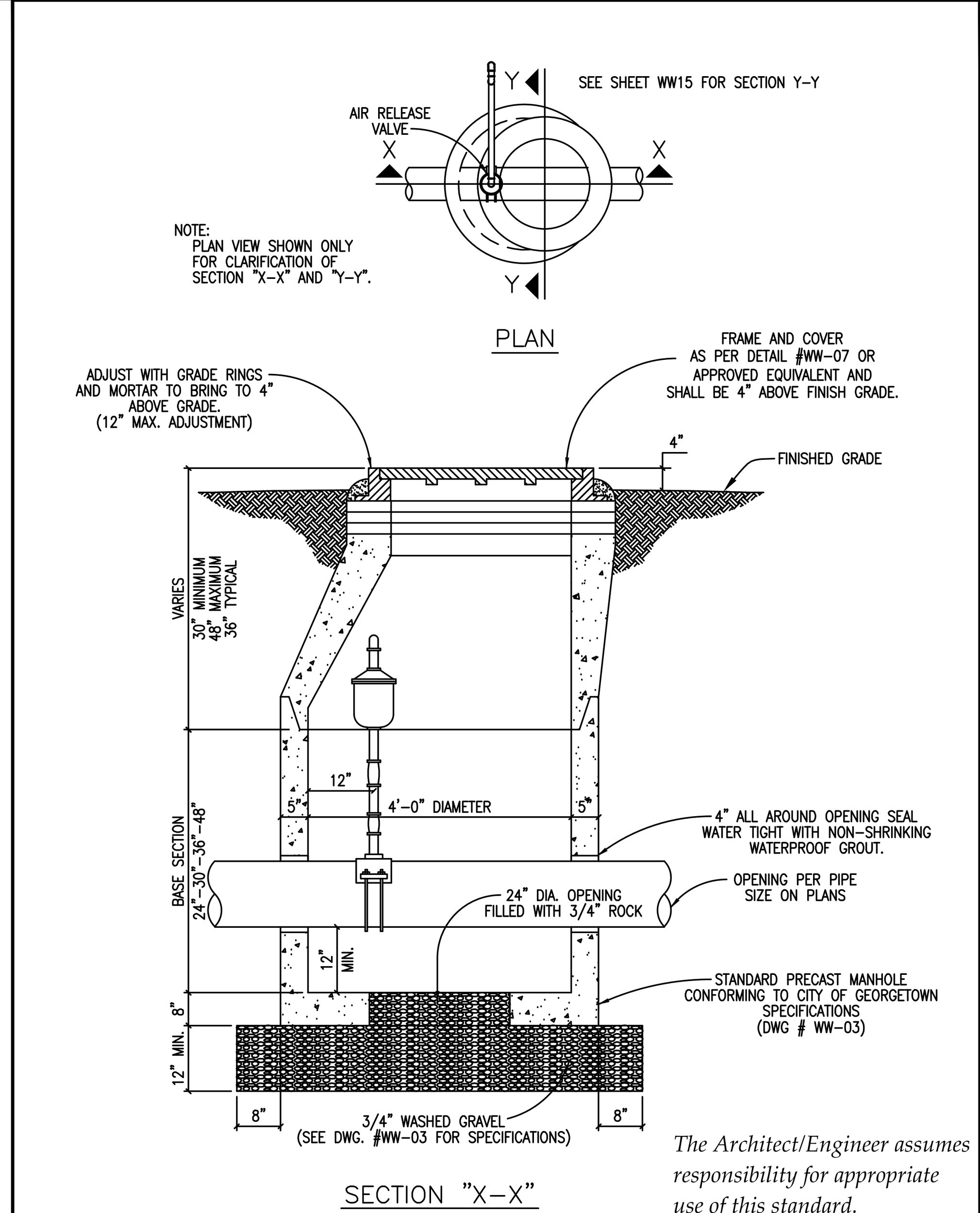

The Architect/Engineer assumes responsibility for appropriate use of this standard.

ADOPTED 6/21/2006

GEORGETOWN TEXAS — Georgetown Utility Systems

CITY OF GEORGETOWN CONSTRUCTION STANDARDS AND DETAILS

STANDARD AIR RELEASE VALVE FOR FORCE MAIN

WW14 — SCALE: NTS — DATE: 1/2003 — DRAWN BY: MRS — APPROVED BY: TRB

DETAIL A
NTS

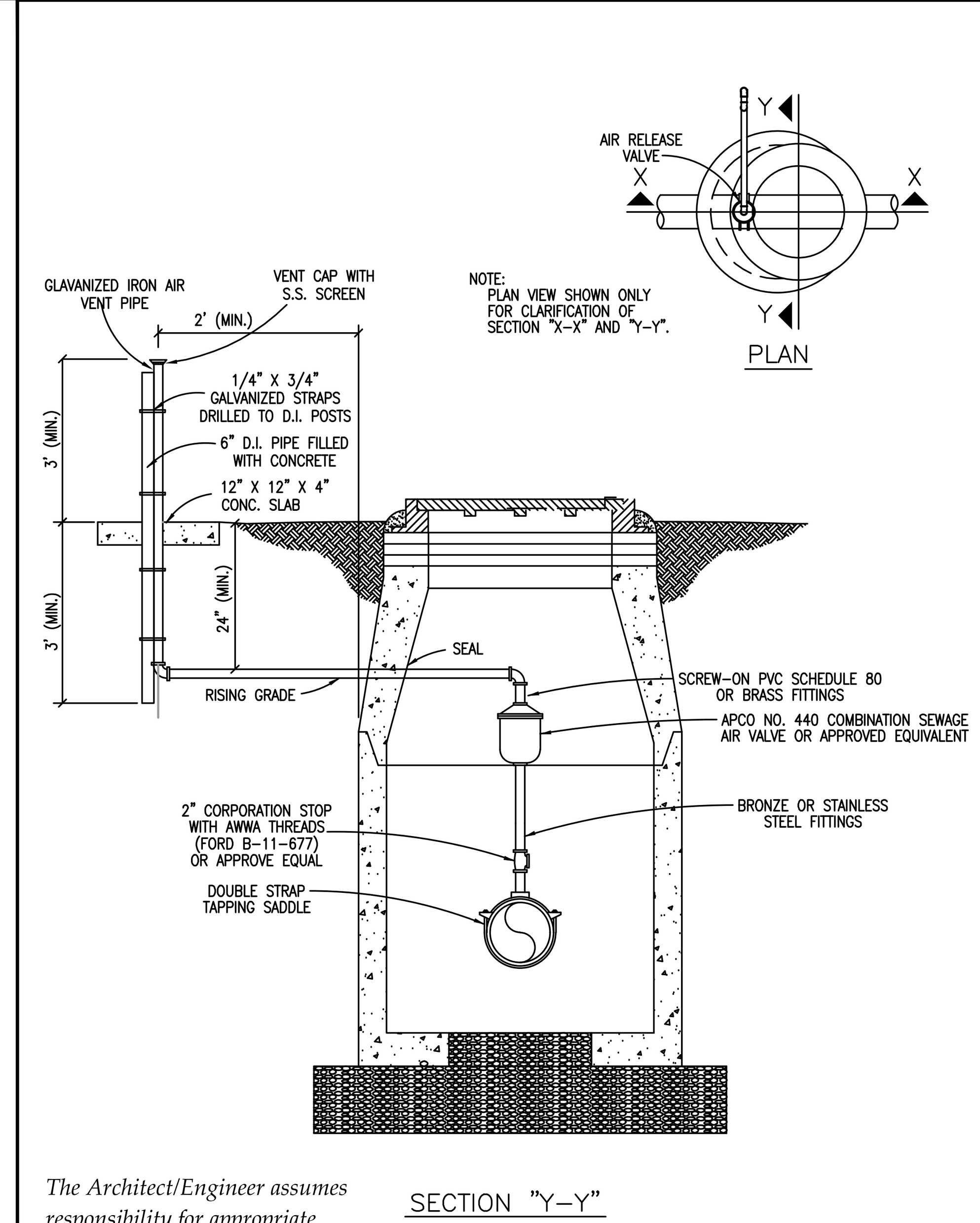

The Architect/Engineer assumes responsibility for appropriate use of this standard.

ADOPTED 6/21/2006

CITY OF GEORGETOWN CONSTRUCTION STANDARDS AND DETAILS

STANDARD AIR RELEASE VALVE FOR FORCE MAIN

WW15 — SCALE: NTS — DATE: 1/2003 — DRAWN BY: MRS — APPROVED BY: TRB

DETAIL B
NTS

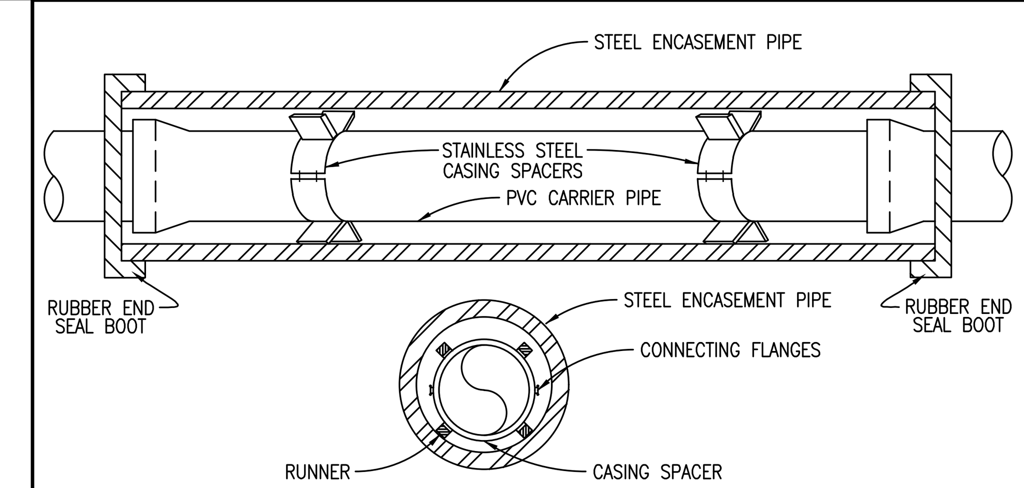

NOTES:

1. CASING SPACERS SHALL BE BOLT ON STYLE WITH A SHELL MADE IN TWO SECTIONS OF HEAVY T-304 STAINLESS STEEL. CONNECTING FLANGES SHALL BE RIBBED FOR EXTRA STRENGTH. CASING SPACERS SHALL BE MADE BY CASCADE WATERWORKS MFG. CO. OR APPROVED EQUAL.
2. CASING SPACERS SHALL HAVE RUNNERS MADE OF ULTRA HIGH MOLECULAR WEIGHT POLYMER, WITH A MINIMUM HEIGHT OF 2 INCHES.
3. DO NOT USE WEDGES BETWEEN TOP OF PVC CARRIER PIPE AND INSIDE OF CASING TO KEEP PVC FROM MOVING.
4. PRIOR TO INSERTING PVC CARRIER PIPE, ANY WATER SHOULD BE PUMPED OUT OF THE CASING PIPE SO THAT NO MORE THAN A FEW INCHES OF WATER REMAINS.
5. SPACERS WILL BE REQUIRED WITHIN AT LEAST 3 FEET FROM BOTH OPENINGS OF THE ENCASEMENT PIPE AND SPACED NO GREATER THAN 6 FEET THROUGHOUT THE ENCASEMENT PIPE.
6. ENCASEMENT PIPE SHALL BE SMOOTH STEEL 35,000 PSI YIELD STRENGTH WITH THICKNESS ACCORDING TO THE FOLLOWING TABLE:
7. WHEN CASING IS REQUIRED UNDER PAVEMENT WITHIN THE R.O.W., THE CASING SHALL EXTEND OUT TO WITHIN 4' INSIDE OF THE R.O.W. LINE, ON BOTH SIDES.
8. ALL JOINTS SHALL BE RESTRAINED ON PVC CARRIER PIPE.

PIPE SIZE-CARRIER (DIAMETER)	PIPE SIZE-CASING (DIAMETER)(MIN.)	MINIMUM PIPE THICKNESS (INCHES)	
6"	16"		
8"	18"	1/4	0.2500
10"	20"	5/16	0.3125
12" - 14"	24"	3/8	0.3750
16" - 18"	30"	7/16	0.4375
20"	36"	1/2	0.5000
24"	42"	1/2	0.5000
30"	48"	1/2	0.5000

The Architect/Engineer assumes responsibility for appropriate use of this standard.

ADOPTED 6/21/2006

CITY OF GEORGETOWN CONSTRUCTION STANDARDS AND DETAILS

INSTALLATION OF P.V.C. PIPE THROUGH CASING

W14 — SCALE: NTS — DATE: 1/2003 — DRAWN BY: MRS — APPROVED BY: TRB

DETAIL C
NTS

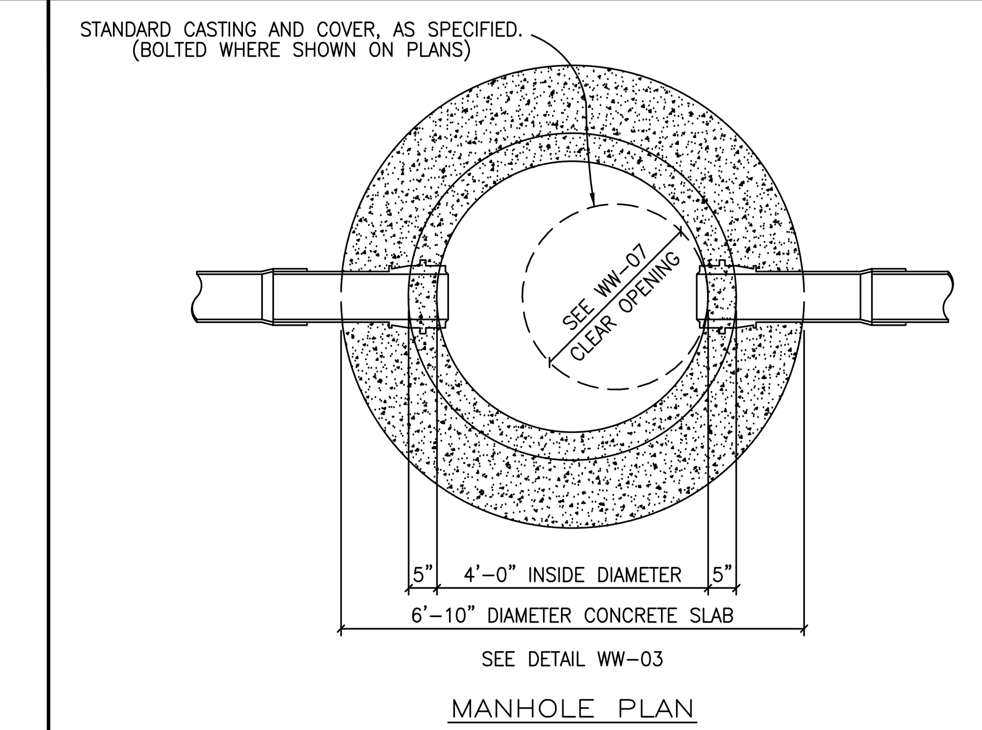

SEE DETAIL WW-03

MANHOLE PLAN

CITY OF GEORGETOWN NOTES:

MANHOLE DETAILS SHALL REFLECT THE CITY'S MINIMUM SPECIFICATIONS, AS STATED BELOW:

A. ALL MANHOLES SHALL BE 48" I.D., R.C.P., CLASS III, WITH RUBBER PROFILE GASKET – SINGLE OFF-SET JOINT CONFORMING TO ASTM C478, C433 AND C76.
B. ALL MANHOLES SHALL HAVE FRAME AND COVER, AS MANUFACTURED BY EAST JORDAN IRON WORKS (AS PER DETAIL # WW-07) OR APPROVED EQUIVALENT.
C. ALL MANHOLES SHALL BE CONCRETE WITH CAST IRON FRAME AND COVER.
D. ALL MANHOLES SHALL HAVE AN ECCENTRIC CONE.
E. MANHOLES MAY HAVE A FLAT LID, IF APPROVED BY CITY OF GEORGETOWN, BEING 12" THICK WITH A MINIMUM 30" OPENING, AS MANUFACTURED BY HANSEN PIPE AND PRECAST OR APPROVED EQUAL M.F.G. CONFORMING TO ASTM C478, 5000 P.S.I. CONCRETE, TRAFFIC BEARING AND WITH PROFILE GASKET – SINGLE OFF-SET JOINT CONFORMING TO ASTM C443.
F. INVERTS AND FLEXIBLE SEAL BOOTS, PER ASTM C-923, SHALL BE CAST INTO BASE SECTION.
G. MINIMUM DROP BETWEEN INVERTS SHALL BE ONE-TENTH OF A FOOT (0.1').
H. GRADE RINGS WITH AN I.D. TO MATCH FRAMES CLEAR OPENING WITH A MAXIMUM ADJUSTMENT OF 12" ARE ALLOWED.

The Architect/Engineer assumes responsibility for appropriate use of this standard.

ADOPTED 6/21/2006

CITY OF GEORGETOWN CONSTRUCTION STANDARDS AND DETAILS

STANDARD MANHOLE – PLAN

WW02 — SCALE: NTS — DATE: 1/2003 — DRAWN BY: MRS — APPROVED BY: TRB

DETAIL D
NTS

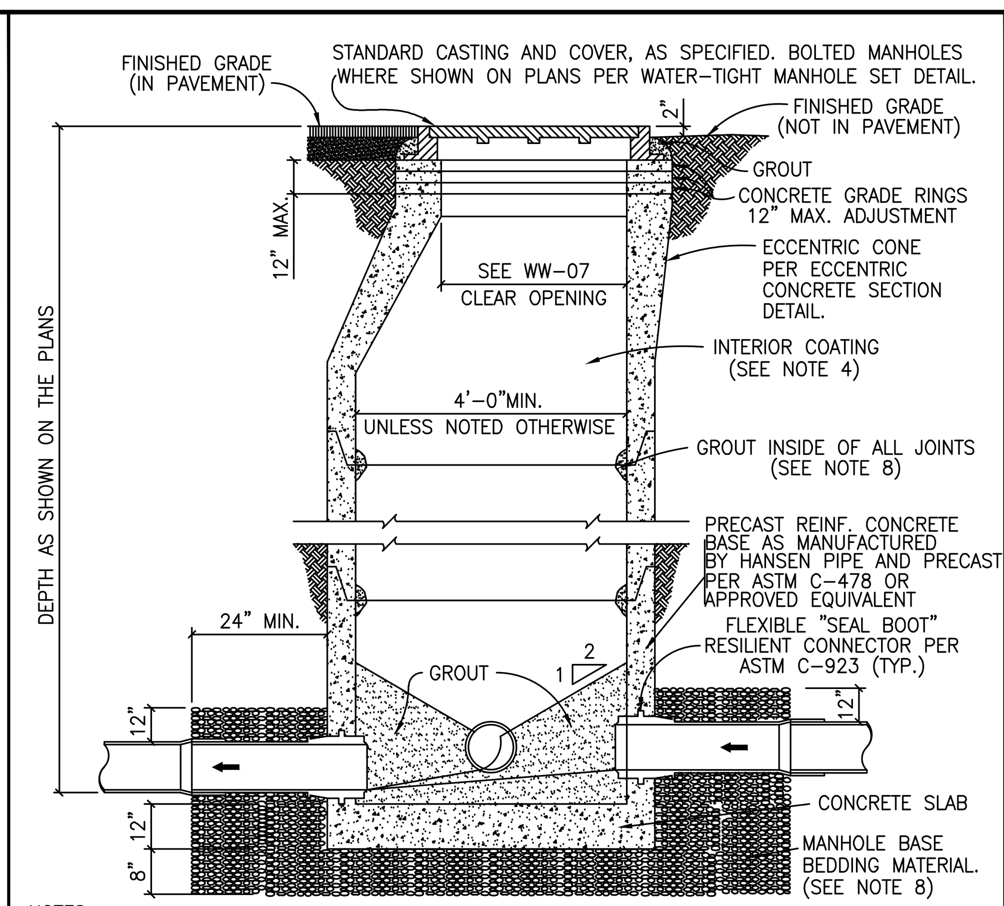

NOTES:

1. MANHOLES SHALL BE PRECAST ASTM C-478 BELL AND SPIGOT WITH PROFILE GASKET – SINGLE OFF-SET JOINTS.
2. SEE PLANS AND MANHOLE SCHEDULE, FOR MANHOLE SIZE, LOCATION, CONFIGURATION, TYPE OF TOP SECTION, VENTING REQUIREMENTS, PIPE SIZE AND TYPES.
3. SEE SPECIFICATIONS ON MATERIALS AND CONSTRUCTION.
4. AN 80 MIL. COAT OF RAVEN LINING SYSTEMS, RAVEN 405 ULTRA HIGH BUILD EPOXY COATING, OR SPRAY WALL EPOXY COATING, OR APPROVED EQUAL, TO BE APPLIED TO ENTIRE INTERIOR OF EACH WASTEWATER MANHOLE AND UNDERSIDE OF FLAT TOPS.
5. ALL MANHOLE COVERS SHALL BE BOLTED AND GASKETTED WHEN MANHOLES ARE LOCATED OUT FROM PAVEMENT.
6. MANHOLES TO BE VENTED ARE IDENTIFIED ON MANHOLE SCHEDULE. REFERENCE MANHOLE VENT DETAIL.
7. MANHOLES ARE TO BE DESIGNED TO RESIST LATERAL AND VERTICAL SOIL FORCES RESULTING FROM MANHOLE DEPTH. ADDITIONALLY, MANHOLES LOCATED IN PAVEMENT TO BE DESIGNED FOR HS-20 TRAFFIC LOADS.
8. GROUT SHALL MEET THE REQUIREMENTS AS STATED BY THE COATING MANUFACTURER.
9. MANHOLE BASE BEDDING MATERIAL SPECS. FOR 3/4" WASHED GRAVEL:
   SIEVE SIZE 2", PERCENT (%) RETAINED 0
   SIEVE SIZE 1 1/2", % RETAINED 0-10
   SIEVE SIZE 1", % RETAINED 45-80
   SIEVE SIZE 3/4", % RETAINED 85-100
   SIEVE SIZE 3/8", % RETAINED 95-100

The Architect/Engineer assumes responsibility for appropriate use of this standard.

ADOPTED 6/21/2006

CITY OF GEORGETOWN CONSTRUCTION STANDARDS AND DETAILS

STANDARD MANHOLE – SECTION

WW03 — SCALE: NTS — DATE: 1/2003 — DRAWN BY: MRS — APPROVED BY: TRB

DETAIL E
NTS

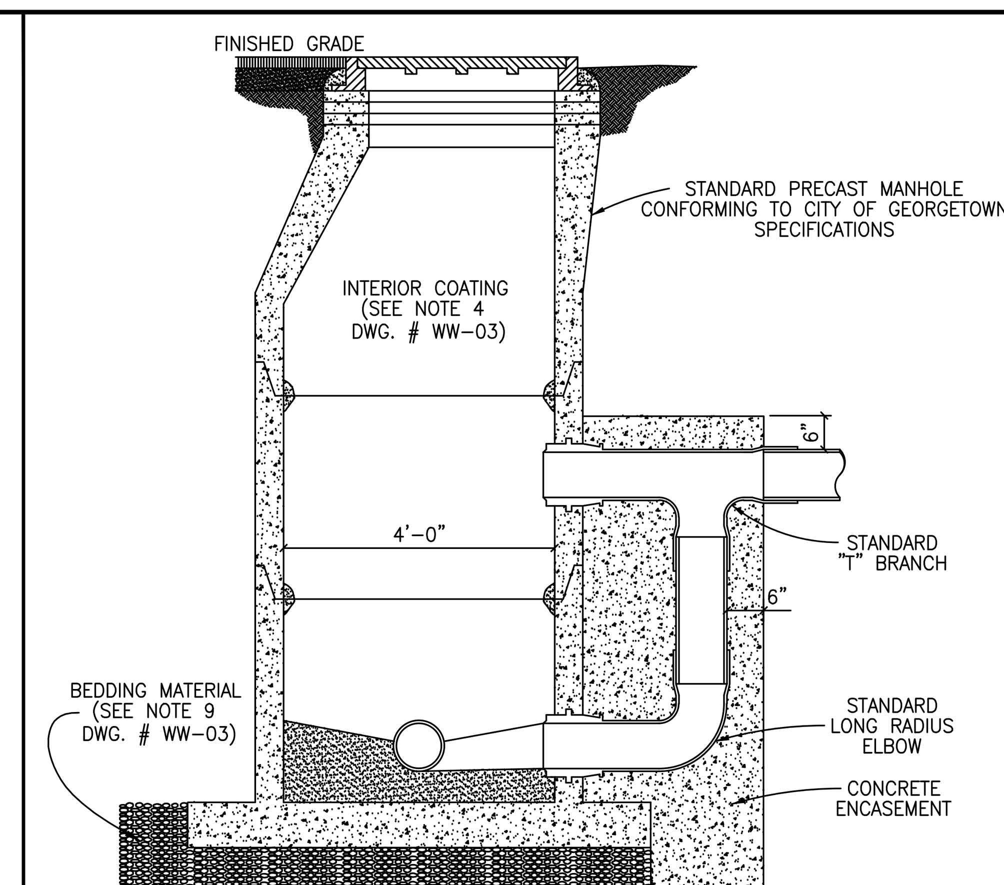

NOTES:

1. CONCRETE ENCASEMENT FOR DROP CONNECTION TO BE POURED INTEGRALLY WITH BOTH MANHOLE SLAB AND WALL.
2. DROP CONNECTIONS SHALL BE REQUIRED WHENEVER AN INFLUENT SEWER IS LOCATED TWO FEET (2') OR MORE ABOVE THE MAIN INVERT CHANNEL.
3. A FLOW CHANNEL SHALL BE CONSTRUCTED INSIDE MANHOLE TO DIRECT INFLUENT INTO FLOW STREAM.
4. WHEN P.V.C. IS USED IN SANITARY SEWER LINES, SOLVENT TYPE JOINT P.V.C. FITTINGS MAY BE UTILIZED IN THE DROP ASSEMBLY ONLY.
5. MINIMUM PIPE SIZE FOR DROP IS EIGHT INCHES (8").
6. SEE STANDARD MANHOLE DETAIL (DWG. # WW-03) FOR ADDITIONAL REQUIREMENTS.

The Architect/Engineer assumes responsibility for appropriate use of this standard.

ADOPTED 6/21/2006

CITY OF GEORGETOWN CONSTRUCTION STANDARDS AND DETAILS

DROP CONNECTION-PRECAST MANHOLE TYPE "A"

WW04 — SCALE: NTS — DATE: 1/2003 — DRAWN BY: MRS — APPROVED BY: TRB

DETAIL F
NTS

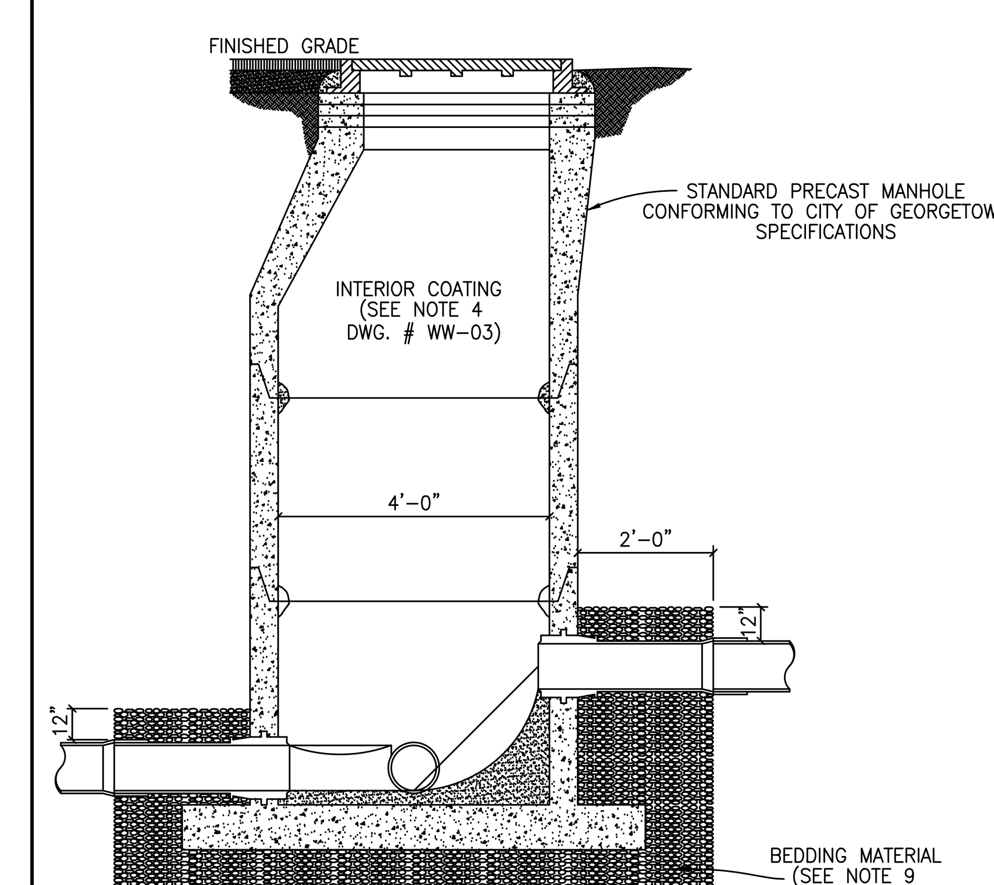

NOTES:

1. TO BE USED WHERE DROP IS SIX INCHES (6") TO TWO FEET (2'-0").
2. A FLOW CHANNEL SHALL BE CONSTRUCTED INSIDE MANHOLE TO DIRECT INFLUENT INTO FLOW STREAM.
3. CONSTRUCTION OF DROP SHALL PROVIDE AN OVERSIZED SLAB TO EXTEND UNDER THE DROP CONNECTION.
4. MINIMUM PIPE SIZE FOR DROP IS EIGHT INCHES (8").
5. SEE STANDARD MANHOLE DETAIL (DWG. # WW-03) FOR ADDITIONAL REQUIREMENTS.

The Architect/Engineer assumes responsibility for appropriate use of this standard.

ADOPTED 6/21/2006

CITY OF GEORGETOWN CONSTRUCTION STANDARDS AND DETAILS

DROP CONNECTION-PRECAST MANHOLE TYPE "B"

WW05 — SCALE: NTS — DATE: 1/2003 — DRAWN BY: MRS — APPROVED BY: TRB

DETAIL G
NTS

STATE OF TEXAS — GERALD S. FURRIER — 129811 — LICENSED PROFESSIONAL ENGINEER — 12/11/2023

Plotted: 12/13/2023 6:38:40 PM

© 2023 CDM SMITH ALL RIGHTS RESERVED.
REUSE OF DOCUMENTS: THESE DOCUMENTS AND DESIGNS PROVIDED BY PROFESSIONAL SERVICE, INCORPORATED HEREIN, ARE THE PROPERTY OF CDM SMITH AND ARE NOT TO BE USED, IN WHOLE OR PART, FOR ANY OTHER PROJECT WITHOUT THE WRITTEN AUTHORIZATION OF CDM SMITH.

XREFs: [REVW_G-FURRIER, South lake to South fork_Border] Images: []
Last saved by: LIZ2 Time: 12/13/2023 6:38:23 PM
C:\pw_pf1\liz2\d3908821\C002STDT.dwg

REV. NO.	DATE	DRWN	CHKD	REMARKS

DESIGNED BY: A. KAJALE
DRAWN BY: S. DHANGAR
SHEET CHK'D BY: M. MAHADEVAN
CROSS CHK'D BY: A. KAJALE
APPROVED BY: G. FURRIER
DATE: DECEMBER 2023

CDM Smith
8310-1 N Capital of Texas Hwy, Suite 250
Austin, TX 78731
Tel: (512) 346-1100
TBPELS Firm Registration No. F-3043

CITY OF GEORGETOWN, TEXAS

CEDAR BREAKS AND D B WOOD LIFT STATIONS

CIVIL STANDARD DETAILS II

PROJECT NO. 2048-272644
FILE NAME: C002STDT
SHEET NO. CD-2

The Architect/Engineer assumes responsibility for appropriate use of this standard.

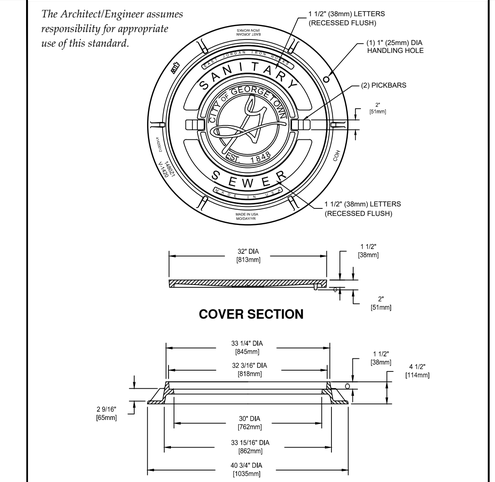

NOTES:

1. STANDARD WASTEWATER MANHOLE SET TO BE EAST JORDAN IRON WORKS, INC. CATALOG NO. 1480A V-1420/1480Z1, COVER TO BE STAMPED WITH "SANITARY SEWER".
2. STANDARD WASTEWATER MANHOLE SET TO BE HEAVY DUTY LOAD RATED.
3. FOR MORE DETAILED SPECIFICATIONS REFER TO EAST JORDAN IRON WORKS, INC. REFERENCE PRODUCT DRAWING 41420012 00148390.
4. FOR BOLTED WASTEWATER MANHOLE SET REFER TO DETAIL WW07A.

REVISION NOTE: ADOPTED 6/21/2006

CITY OF GEORGETOWN
CONSTRUCTION STANDARDS AND DETAILS
STANDARD WASTEWATER MANHOLE SET

DRAWING NAME: WW07
SCALE: NTS | DATE: 1/2003
DRAWN BY: MRS | APPROVED BY: TRB

DETAIL A
NTS

The Architect/Engineer assumes responsibility for appropriate use of this standard.

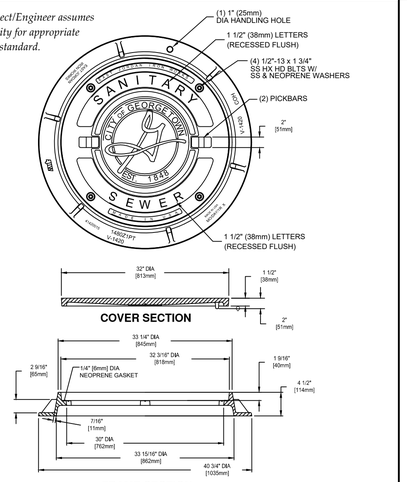

NOTES:

1. BOLTED WASTEWATER MANHOLE SET TO BE EAST JORDAN IRON WORKS, INC. CATALOG NO. 1480APT V-1420/1480Z1PT, COVER TO BE STAMPED WITH "SANITARY SEWER".
2. BOLTED WASTEWATER MANHOLE SET TO BE HEAVY DUTY LOAD RATED.
3. FOR MORE DETAILED SPECIFICATIONS REFER TO EAST JORDAN IRON WORKS, INC. REFERENCE PRODUCT DRAWING 00148392 41420015.
4. FOR STANDARD WASTEWATER MANHOLE SET REFER TO DETAIL WW07.

REVISION NOTE: ADOPTED 6/21/2006

CITY OF GEORGETOWN
CONSTRUCTION STANDARDS AND DETAILS
BOLTED WASTEWATER MANHOLE SET

DRAWING NAME: WW07A
SCALE: NTS | DATE: 1/2006
DRAWN BY: MRS | APPROVED BY: TRB

DETAIL B
NTS

The Architect/Engineer assumes responsibility for appropriate use of this standard.

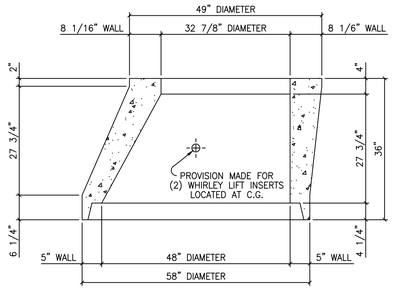

The Architect/Engineer assumes responsibility for appropriate use of this standard.

REVISION NOTE: ADOPTED 6/21/2006

CITY OF GEORGETOWN
CONSTRUCTION STANDARDS AND DETAILS
48"X5" TO 33"X8"X36" TALL ECCENTRIC CONCRETE SECTION

DRAWING NAME: WW08
SCALE: NTS | DATE: 1/2003
DRAWN BY: MRS | APPROVED BY: TRB

DETAIL C
NTS

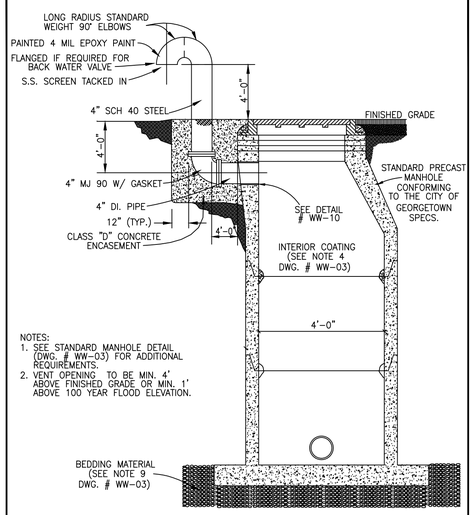

NOTES:
1. SEE STANDARD MANHOLE DETAIL (DWG. # WW-03) FOR ADDITIONAL REQUIREMENTS.
2. VENT OPENING TO BE MIN. 4' ABOVE FINISHED GRADE OR MIN. 1' ABOVE 100 YEAR FLOOD ELEVATION.

The Architect/Engineer assumes responsibility for appropriate use of this standard.

REVISION NOTE: ADOPTED 6/21/2006

CITY OF GEORGETOWN
CONSTRUCTION STANDARDS AND DETAILS
TYPICAL MANHOLE WITH VENT

DRAWING NAME: WW19
SCALE: NTS | DATE: 11/2003
DRAWN BY: MRS | APPROVED BY: TRB

DETAIL D
NTS

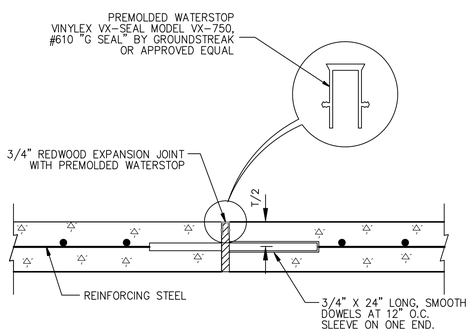

EXPANSION JOINT
DETAIL E
NTS

NOTES:

1. TOOLED OR SAW CUT CONTRACTION JOINTS SHALL BE AT REGULAR INTERVALS THROUGHOUT THE PAVEMENT AT EVEN INTERVALS BETWEEN EXPANSION JOINTS AS INDICATED ON THE PLAN.
2. JOINTS SHALL BE SPACED SO THAT THE RESULTING PANELS ARE CLOSE TO SQUARE. IN NO CASE SHOULD THE LENGTH OF A PANEL EXCEED 1.5 TIMES THE WIDTH.

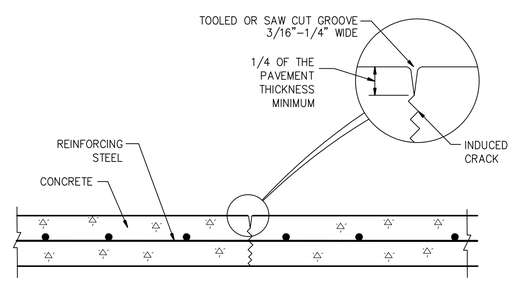

CONTRACTION JOINT
DETAIL F
NTS

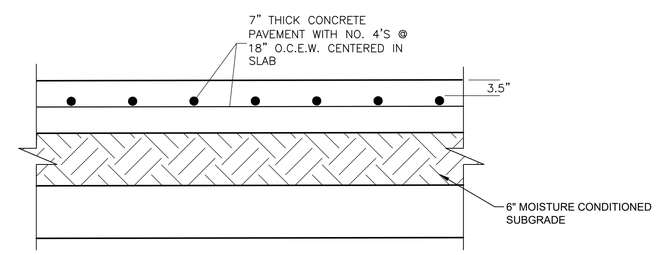

NOTES:

1. INSTALL EXPANSION JOINTS AT NO GREATER THAN 75 FEET ON CENTER IN BOTH DIRECTIONS.
2. INSTALL CONTRACTION JOINTS AT NO GREATER THAN 15 FEET ON CENTER IN BOTH DIRECTIONS

CONCRETE PAVING SECTION
DETAIL G
NTS

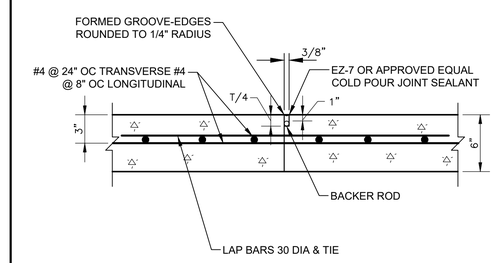

CONSTRUCTION JOINT
DETAIL H
NTS

STATE OF TEXAS
GERALD S. FURRIER
129811
LICENSED PROFESSIONAL ENGINEER
12/11/2023

REV. NO.	DATE	DRWN	CHKD	REMARKS

DESIGNED BY: A. KAJALE
DRAWN BY: S. DHANGAR
SHEET CHK'D BY: M. MAHADEVAN
CROSS CHK'D BY: A. KAJALE
APPROVED BY: G. FURRIER
DATE: DECEMBER 2023

CDM Smith
8310-1 N Capital of Texas Hwy, Suite 250
Austin, TX 78731
Tel: (512) 346-1100
TBPELS Firm Registration No. F-3043

CITY OF GEORGETOWN, TEXAS

CEDAR BREAKS AND D B WOOD LIFT STATIONS

CIVIL STANDARD DETAILS III

PROJECT NO. 2048-272644
FILE NAME: C003STDT
SHEET NO.
CD-3

© 2023 CDM SMITH ALL RIGHTS RESERVED.
REUSE OF DOCUMENTS: THESE DOCUMENTS AND DESIGNS PROVIDED BY PROFESSIONAL SERVICE, INCORPORATED HEREIN, ARE THE PROPERTY OF CDM SMITH AND ARE NOT TO BE USED, IN WHOLE OR PART, FOR ANY OTHER PROJECT WITHOUT THE WRITTEN AUTHORIZATION OF CDM SMITH.

Plotted: 12/13/2023 2:45:18 PM

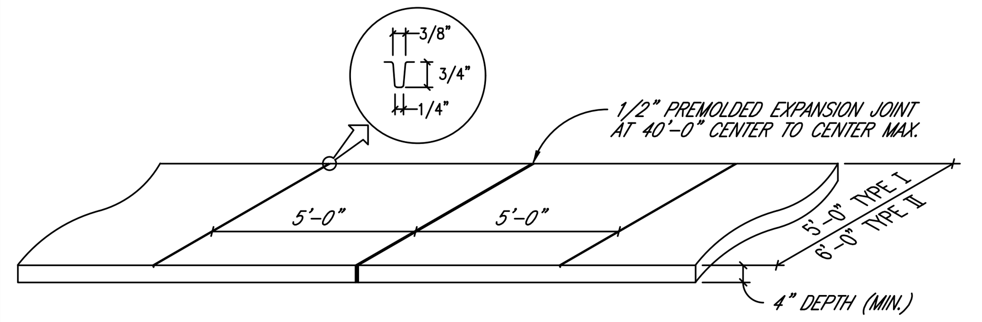

TYPE I – AS REQUIRED FOR SINGLE FAMILY, DUPLEXES AND TOWNHOUSES.
TYPE II – AS REQUIRED FOR APARTMENTS, OFFICE AND PARKING LOTS, COMMERCIAL AND INDUSTRIAL.

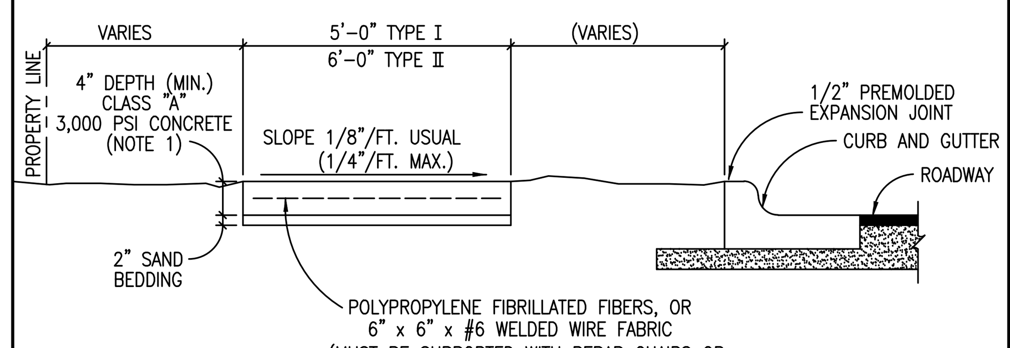

NOTES:

1. FOR ROLLER STAMPED SIDEWALK: MATCH TO SPECIFICATIONS.
2. STANDARD LOCATION OF SIDEWALK IS OFF BACK OF CURB. SPECIAL DESIGNS MAY BE APPROVED BY THE CITY ENGINEER, PRIOR TO FINAL DESIGN.
3. SIDEWALK SHALL CONFORM TO CURRENT AMERICANS WITH DISABILITIES ACT STANDARDS.
4. IF REQUIRED ALL SIDEWALKS SHALL BE SUBMITTED AND APPROVED BY THE TEXAS DEPARTMENT OF LICENSING AND REGULATION BY THE ENGINEER RECORD.
5. ANY VARIANCE IN TEXTURE, GRADE OR ALIGNMENT MUST BE APPROVED BY THE TEXAS DEPARTMENT OF LICENSING AND REGULATION.

The Architect/Engineer assumes responsibility for appropriate use of this standard.

REVISION NOTE: ADOPTED 6/21/2006

CITY OF GEORGETOWN
CONSTRUCTION STANDARDS AND DETAILS
SIDEWALK SECTION AND JOINT DETAIL

DRAWING NAME: SD14
SCALE: NTS DATE: 1/2003
DRAWN BY: MRS APPROVED BY: TRB

DETAIL A
NTS

FLOW PATTERNS FOR INVERT CHANNELS

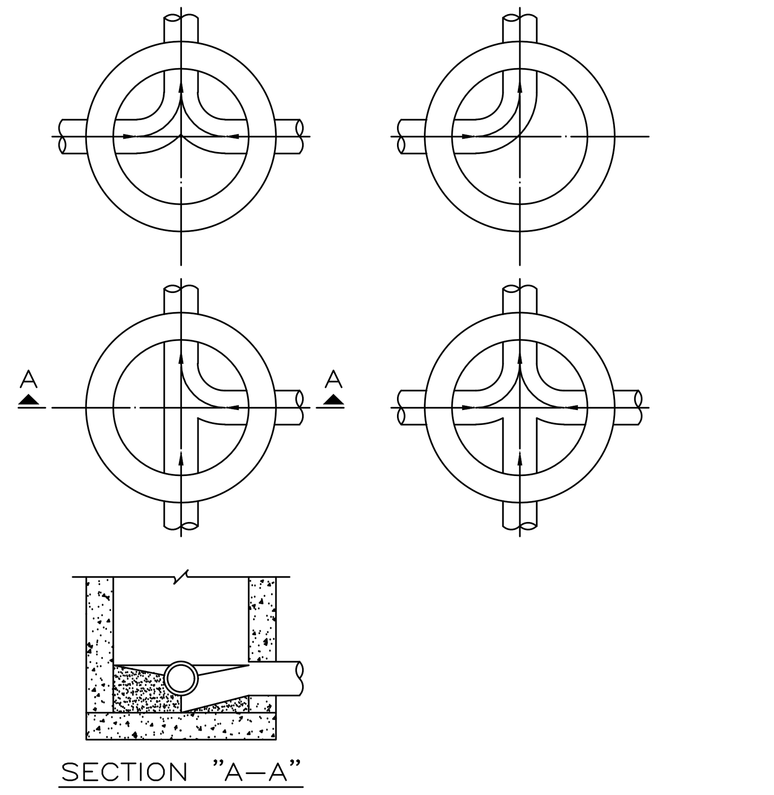

NOTES:

1. INVERT CHANNELS TO BE CONSTRUCTED FOR SMOOTH FLOW WITH NO OBSTRUCTIONS.
2. SPILLWAYS SHALL BE CONSTRUCTED BETWEEN PIPES WITH DIFFERENT INVERT ELEVATIONS PROVIDING FOR SMOOTH FLOW.
3. CHANNELS FOR FUTURE CONSTRUCTIONS (STUBS) SHALL BE CONSTRUCTED, FILLED WITH SAND, AND COVERED WITH 1" OF MORTAR.
4. SLOPE MANHOLE ITSELF WITH A 1:2 SLOPE FROM MANHOLE WALL TO CHANNEL.
5. INVERT SHALL BE A MINIMUM OF 1/2 THE DIAMETER OF THE LARGEST PIPE OR 4" DEEP.

The Architect/Engineer assumes responsibility for appropriate use of this standard.

REVISION NOTE: ADOPTED 6/21/2006

CITY OF GEORGETOWN
CONSTRUCTION STANDARDS AND DETAILS
FLOW PATTERNS FOR INVERT CHANNELS

DRAWING NAME: WW06
SCALE: NTS DATE: 1/2003
DRAWN BY: MRS APPROVED BY: TRB

DETAIL B
NTS

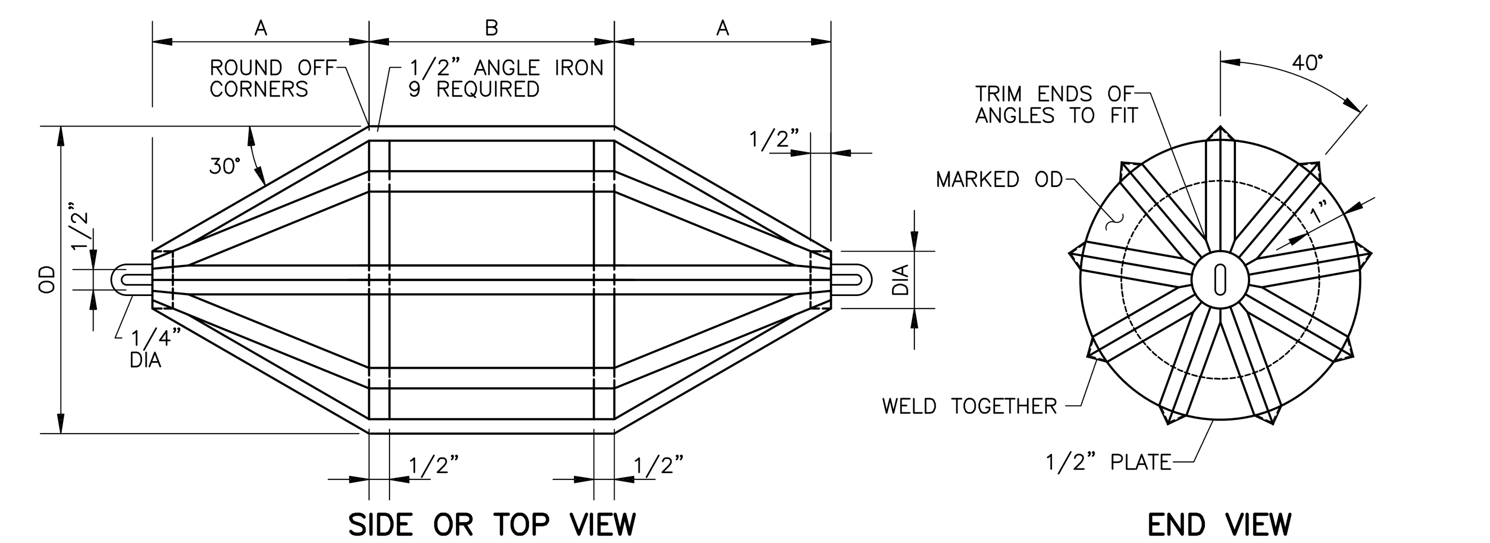

PIPE SIZE (IN)	A (IN)	B (IN)	MANDREL OD PVC (SDR 26) ASTM D3034 (IN)	DIA (IN)
6	4.0	4	5.62	1.00
8	5.3	6	7.52	1.40
10	6.7	6	9.41	1.67
12	8.0	8	11.19	1.95
15	10.0	9	13.70	2.15

PIPE SIZE (IN)	A (IN)	B (IN)	MANDREL OD PVC (T-1) ASTM F679 (IN)	DIA (IN)
18	12	12	16.75	2.89
21	14	14	19.74	3.57
24	16	16	22.21	3.73
27	18	18	25.03	4.25

DEFLECTION TESTING MANDREL

DETAIL C
NTS

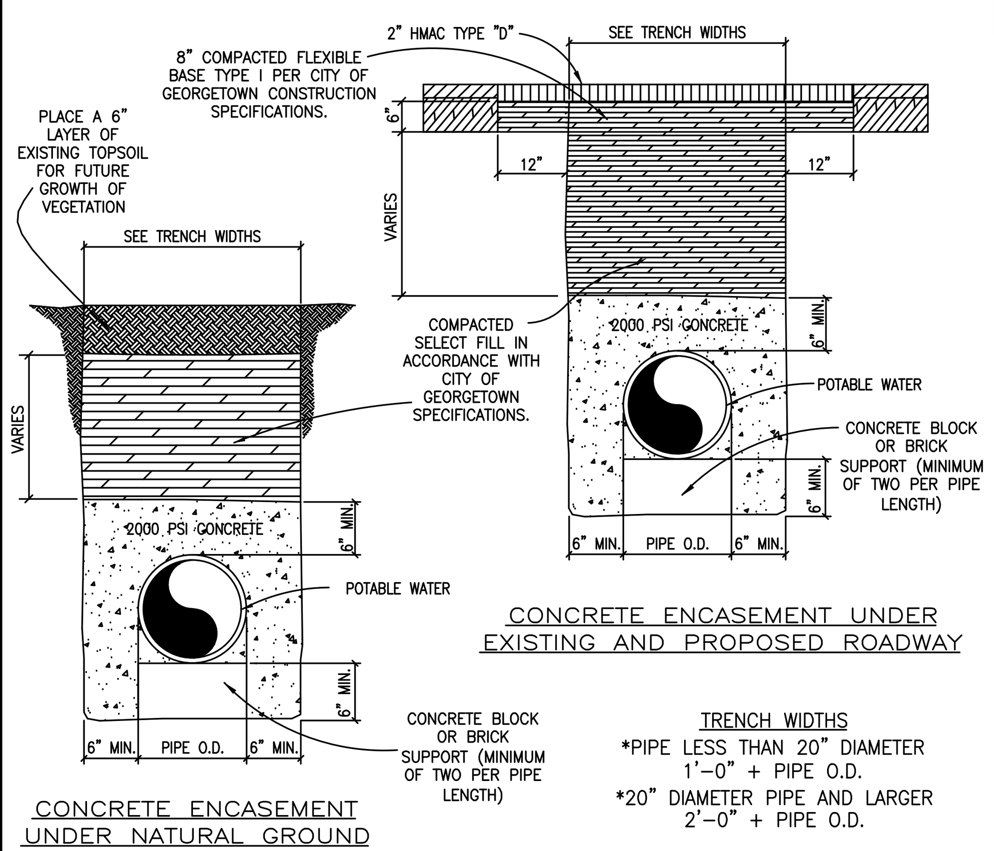

TRENCH WIDTHS
*PIPE LESS THAN 20" DIAMETER
1'–0" + PIPE O.D.
*20" DIAMETER PIPE AND LARGER
2'–0" + PIPE O.D.

NOTES:

1. ENCASEMENT TO BE CONSTRUCTED WHERE SEWER LINES PASS OVER OR UNDER A WATER MAIN WITH LESS THAN TWELVE INCHES (12") CLEAR DISTANCE.
2. AT CROSSINGS, ENCASEMENT SHALL EXTEND TEN FEET (10'–0") ON EITHER SIDE OF CROSSING.
3. BEGINNING AND ENDING OF ENCASEMENTS SHALL NOT BE MORE THAN SIX INCHES (6") FROM A PIPE JOINT.
4. WHERE WATER AND SEWER LINES PARALLEL WITH LESS THAN TEN FEET (10'–0") HORIZONTAL CLEAR DISTANCE, NO ENCASEMENT IS REQUIRED IF BOTH LINES ARE 150 PSI PRESSURE PIPE.
5. RAW WATER MAINS SHALL BE 150 PSI PRESSURE RATED WHEN PARALLELING POTABLE WATER MAINS WITH LESS THAN NINE FEET (9'–0") HORIZONTAL CLEARANCE.
6. WHERE MINIMUM COVER, THIRTY SIX INCHES (36") IS NOT AVAILABLE, ENCASEMENT WILL BE REQUIRED.
7. ALL CONCRETE ENCASEMENTS MUST BE FORMED AND INSPECTED BY THE CITY OF GEORGETOWN INSPECTOR PRIOR TO PLACING CONCRETE AND BACKFILLING.
8. CONTRACTOR OR ENGINEER MAY USE FLOWABLE BACKFILL AS AN ALTERNATE BACKFILL MATERIAL (SEE C9 FLOWABLE BACKFILL FOR THE SPECIFICATION).

The Architect/Engineer assumes responsibility for appropriate use of this standard.

REVISION NOTE: ADOPTED 6/21/2006

CITY OF GEORGETOWN
CONSTRUCTION STANDARDS AND DETAILS
CONCRETE ENCASEMENT DETAIL

DRAWING NAME: W15
SCALE: NTS DATE: 1/2003
DRAWN BY: MRS APPROVED BY: TRB

DETAIL D
NTS

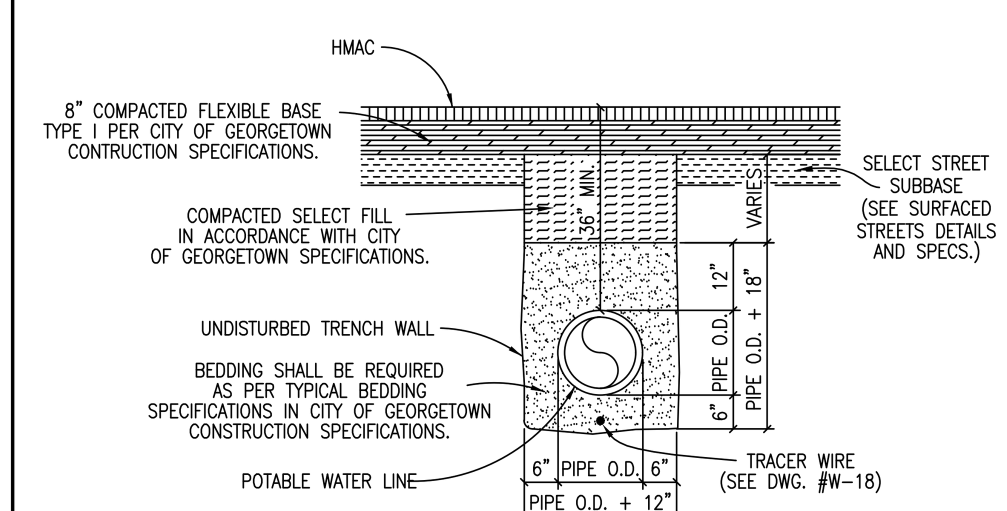

TRENCH WIDTHS
*PIPE LESS THAN 20" DIAMETER
1'–0" + PIPE O.D.
*20" DIAMETER PIPE AND LARGER
2'–0" + PIPE O.D.

NOTES:

1. DENSITY TESTS SHALL BE TAKEN IN ACCORDANCE WITH THE CITY OF GEORGETOWN CONSTRUCTION SPECIFICATIONS AND STANDARDS.
2. CONTRACTOR OR ENGINEER MAY USE FLOWABLE BACKFILL AS AN ALTERNATE BACKFILL MATERIAL (SEE C9 FLOWABLE BACKFILL FOR THE SPECIFICATION).

The Architect/Engineer assumes responsibility for appropriate use of this standard.

REVISION NOTE: ADOPTED 6/21/2006

CITY OF GEORGETOWN
CONSTRUCTION STANDARDS AND DETAILS
TRENCH AND EMBEDMENT DETAIL UNDER PROPOSED ROADWAY

DRAWING NAME: W22
SCALE: NTS DATE: 1/2003
DRAWN BY: MRS APPROVED BY: TRB

DETAIL E
NTS

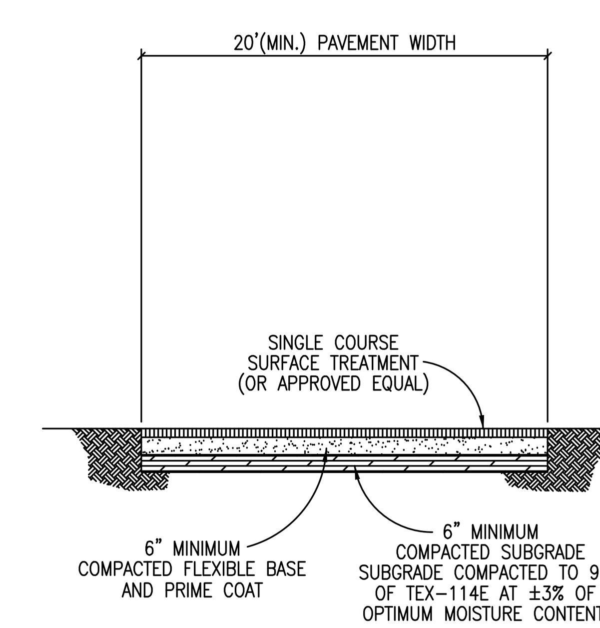

NOTES:

1. EVERY BUILDING CONSTRUCTED SHALL BE ACCESSIBLE TO EMERGENCY APPARATUS BY WAY OF TEMPORARY ALL WEATHER DRIVING SURFACES.
2. A TEMPORARY ALL WEATHER DRIVING SURFACE SHALL EXTEND TO WITHIN 150' OF ALL EXTERIOR PORTIONS OF BUILDINGS
3. TEMPORARY ALL WEATHER DRIVING SURFACES SHALL BE CONSTRUCTED AS SHOWN ON CONSTRUCTION PLANS AND IN ACCORDANCE WITH ITEM 316 SURFACE TREATMENTS OF THE TXDOT STANDARD SPECIFICATIONS FOR CONSTRUCTION OF HIGHWAYS, STREETS AND BRIDGES.
4. TEMPORARY ALL WEATHER DRIVING SURFACES SHALL BE CAPABLE OF SUPPORTING A DESIGN WHEEL LOAD OF 16,000 LB. (H–20 LOADING) IN ORDER TO SUPPORT A GROSS VEHICLE WEIGHT OF 80,000 LB. IF SUBGRADE CONDITIONS CHANGE OR ARE VERY UNSTABLE, AN ADDITIONAL GEOTECHNICAL AND/OR ENGINEERING DESIGN MAY REQUIRE A GREATER CROSS SECTION.
5. CONTRACTOR OR DEVELOPER SHALL MAINTAIN TEMPORARY ALL WEATHER DRIVING SURFACE THROUGHOUT CONSTRUCTION.
6. APPLICABLE SIGNAGE SHALL BE INSTALLED BY THE CONTRACTOR TO DISALLOW PARKING (NO PARKING – FIRE LANE).
7. TEMPORARY ALL WEATHER DRIVING SURFACES SHALL BE INSTALLED PRIOR TO THE ERECTION OF ANY STRUCTURAL FRAMING ABOVE THE FOUNDATION SLAB. CONTACT FIRE SERVICES FOR THE COORDINATION OF TEMPORARY ALL WEATHER DRIVING SURFACES FOR CONSTRUCTION.

The Architect/Engineer assumes responsibility for appropriate use of this standard.

REVISION NOTE: ADOPTED 6/21/2006

CITY OF GEORGETOWN
CONSTRUCTION STANDARDS AND DETAILS
TEMPORARY ALL WEATHER DRIVING SURFACE

DRAWING NAME: SD43
SCALE: NTS DATE: 1/2003
DRAWN BY: MRS APPROVED BY: TRB

DETAIL F
NTS

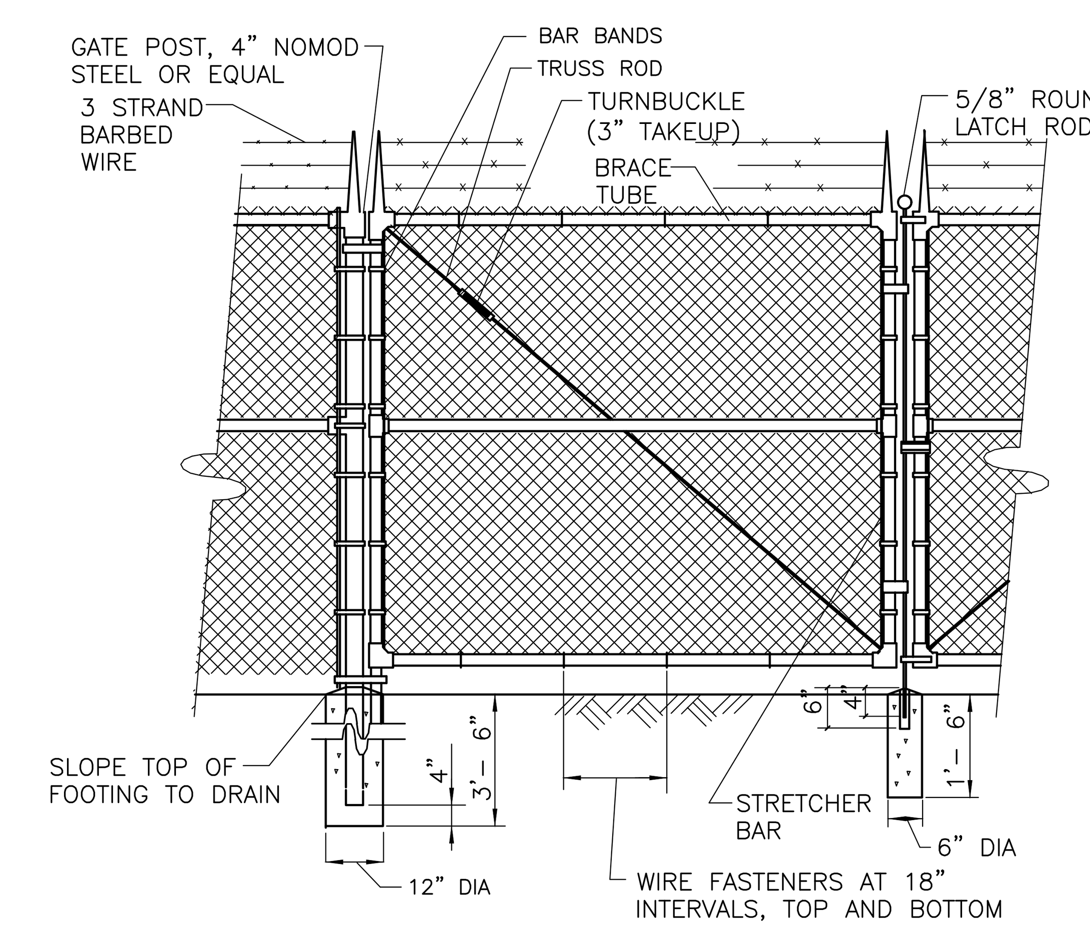

CHAIN LINK FENCE–GATE

NOTE

1 PROVIDE A SIGN ON THE FENCE STATING:
* STATION OWNER
* STATION NAME
* EMERGENCY PHONE NUMBERS
* NO TRESPASSING INFORMATION.

CHAIN LINK FENCE

DETAIL G
NTS

STATE OF TEXAS
GERALD S. FURRIER
129811
LICENSED PROFESSIONAL ENGINEER
12/11/2023

REV. NO.	DATE	DRWN	CHKD	REMARKS

DESIGNED BY: A. KAJALE
DRAWN BY: S. DHANGAR
SHEET CHK'D BY: M. MAHADEVAN
CROSS CHK'D BY: A. KAJALE
APPROVED BY: G. FURRIER
DATE: DECEMBER 2023

CDM Smith
8310-1 N Capital of Texas Hwy, Suite 250
Austin, TX 78731
Tel: (512) 346-1100
TBPELS Firm Registration No. F-3043

CITY OF GEORGETOWN, TEXAS

CEDAR BREAKS AND D B WOOD LIFT STATIONS

CIVIL STANDARD DETAILS IV

PROJECT NO. 2048–272644
FILE NAME: C004STDT
SHEET NO.
CD-4

Plotted: 12/13/2023 2:45:43 PM

XREFs: [REVW_G-FURRIER, South lake to South fork, Border] Images: []
Last saved by: MAHADEVANM Time: 12/13/2023 6:48:40 PM
C:\pw_p\MAHADEVANM\d3908821\C009STDT.dwg
© 2023 CDM SMITH ALL RIGHTS RESERVED.
REUSE OF DOCUMENTS: THESE DOCUMENTS AND DESIGNS PROVIDED BY PROFESSIONAL SERVICE, INCORPORATED HEREIN, ARE THE PROPERTY OF CDM SMITH AND ARE NOT TO BE USED, IN WHOLE OR PART, FOR ANY OTHER PROJECT WITHOUT THE WRITTEN AUTHORIZATION OF CDM SMITH.

GUIDELINES FOR DESIGN AND INSTALLATION OF TEMPORARY EROSION AND SEDIMENTATION CONTROLS

TYPE OF STRUCTURE	REACH LENGTH	MAXIMUM DRAINAGE AREA	SLOPE
SILT FENCE	N/A	2 ACRES	0 – 10%
	200 FEET	2 ACRES	10 – 20%
	100 FEET	1 ACRE	20 – 30%
	50 FEET	1/2 ACRE	> 30%
TRIANGLE FILTER DIKE	100 FEET	1/2 ACRE	< 30% SLOPE
	50 FEET	1/4 ACRE	> 30% SLOPE
ROCK BERM *, **	500 FEET	< 5 ACRES	0 – 10%

* FOR ROCK BERM DESIGN WHERE PARAMETERS ARE OTHER THAN STATED, DRAINAGE AREA CALCULATIONS AND ROCK BERM DESIGN MUST BE SUBMITTED FOR REVIEW.

** HIGH SERVICE ROCK BERMS MAY BE REQUIRED IN AREAS OF ENVIRONMENTAL SIGNIFICANCE AS DETERMINED BY THE CITY OF GEORGETOWN.

The Architect/Engineer assumes responsibility for appropriate use of this standard.

REVISION NOTE: ADOPTED 6/21/2006

CITY OF GEORGETOWN
CONSTRUCTION STANDARDS AND DETAILS
TEMPORARY EROSION AND SEDIMENTATION CONTROL GUIDELINES

DRAWING NAME: EC01 | SCALE: NTS | DATE: 1/2003 | DRAWN BY: MRS | APPROVED BY: TRB

DETAIL A
NTS

NOTE: THIS SECTION IS INTENDED TO ASSIST THOSE PERSONS PREPARING WATER POLLUTION ABATEMENT PLANS (WPAP) OR STORM WATER POLLUTION PREVENTION PLANS (SW3P) THAT COMPLY WITH FEDERAL, STATE AND/OR LOCAL STORM WATER REGULATIONS.

1. THE CONTRACTOR TO INSTALL AND MAINTAIN EROSION/SEDIMENTATION CONTROLS AND TREE/NATURAL AREA PROTECTIVE FENCING PRIOR TO ANY SITE PREPARATION WORK (CLEARING, GRUBBING, GRADING, OR EXCAVATION). CONTRACTOR TO REMOVE EROSION/SEDIMENTATION CONTROLS AT THE COMPLETION OF PROJECT AND GRASS RESTORATION.
2. ALL PROJECTS WITHIN THE RECHARGE ZONE OF THE EDWARD'S AQUIFER SHALL SUBMIT A BEST MANAGEMENT PRACTICES AND WATER POLLUTION AND ABATEMENT PLAN TO THE TNRCC FOR APPROVAL PRIOR TO ANY CONSTRUCTION.
3. THE PLACEMENT OF EROSION/SEDIMENTATION CONTROLS TO BE IN ACCORDANCE WITH THE APPROVED EROSION AND SEDIMENTATION CONTROL PLAN AND WATER POLLUTION ABATEMENT PLAN. DEVIATIONS FROM THE APPROVED PLAN MUST BE SUBMITTED TO AND APPROVED BY THE OWNER'S REPRESENTATIVE.
4. ALL PLANTING SHALL BE DONE BETWEEN MAY 1 AND SEPTEMBER 15 EXCEPT AS SPECIFICALLY AUTHORIZED IN WRITING. IF PLANTING IS AUTHORIZED TO BE DONE OUTSIDE THE DATES SPECIFIED, THE SEED SHALL BE PLANTED WITH THE ADDITION OF WINTER FESCUE (KENTUCKY 31) AT A RATE OF 100lb/ACRE. GRASS SHALL BE COMMON BERMUDA GRASS, HULLED, MINIMUM 82% PURE LIVE SEED. ALL GRASS SEED SHALL BE FREE FROM NOXIOUS WEED, GRADE "A" RECENT CROP, RECLEANED AND TREATED WITH APPROPRIATE FUNGICIDE AT TIME OF MIXING. SEED SHALL BE FURNISHED IN SEALED, STANDARD CONTAINERS WITH DEALER'S GUARANTEED ANALYSIS.
5. ALL DISTURBED AREAS TO BE RESTORED AS NOTED IN THE WATER POLLUTION ABATEMENT PLAN.
6. THE PLANTED AREA TO BE IRRIGATED OR SPRINKLED IN A MANNER THAT WILL NOT ERODE THE TOPSOIL, BUT WILL SUFFICIENTLY SOAK THE SOIL TO A DEPTH OF FOUR (4) INCHES. THE IRRIGATION TO OCCUR AT 10–DAY INTERVALS DURING THE FIRST TWO MONTHS TO INSURE GERMINATION AND ESTABLISHMENT OF THE GRASS . RAINFALL OCCURRENCES OF 1/2 INCH OR GREATER TO POSTPONE THE WATERING SCHEDULE ONE WEEK.
7. RESTORATION TO BE ACCEPTABLE WHEN THE GRASS HAS GROWN AT LEAST 1–1/2 INCHES HIGH WITH 95% COVERAGE, PROVIDED NO BARE SPOTS LARGER THAN 25 SQUARE FEET EXIST.
8. A MINIMUM OF FOUR (4) INCHES OF TOPSOIL TO BE PLACED IN ALL AREAS DISTURBED BY CONSTRUCTION.
9. THE CONTRACTOR TO HYDROMULCH OR SOD (AS SHOWN ON PLANS) ALL EXPOSED CUTS AND FILLS UPON COMPLETION OF CONSTRUCTION.
10. EROSION AND SEDIMENTATION CONTROLS TO BE INSTALLED OR MAINTAINED IN A MANNER WHICH DOES NOT RESULT IN SOIL BUILDUP WITHIN TREE DRIPLINE.
11. TO AVOID SOIL COMPACTION, CONTRACTOR SHALL NOT ALLOW VEHICULAR TRAFFIC, PARKING, OR STORAGE OF EQUIPMENT OR MATERIALS IN THE TREE DRIPLINE AREAS.
12. WHERE A FENCE IS CLOSER THAN FOUR (4) FEET TO A TREE TRUNK, PROTECT THE TRUNK WITH STRAPPED–ON PLANKING TO A HEIGHT OF EIGHT (8) FEET (OR TO THE LIMITS OF LOWER BRANCHING) IN ADDITION TO THE FENCING.
13. TREES TO BE REMOVED IN A MANNER WHICH DOES NOT IMPACT TREES TO BE PRESERVED.
14. ANY ROOT EXPOSED BY CONSTRUCTION ACTIVITY TO BE PRUNED FLUSH WITH THE SOIL. BACKFILL ROOT AREAS WITH GOOD QUALITY TOPSOIL AS SOON AS POSSIBLE. IF EXPOSED ROOT AREAS ARE NOT BACKFILLED WITHIN TWO DAYS, COVER THEM WITH ORGANIC MATERIAL IN A MANNER WHICH REDUCES SOIL TEMPERATURE AND MINIMIZES WATER LOSS DUE TO EVAPORATION.
15. CONTRACTOR TO PRUNE VEGETATION TO PROVIDE CLEARANCE FOR STRUCTURES, VEHICULAR TRAFFIC, AND EQUIPMENT BEFORE DAMAGE OCCURS (RIPPING OF BRANCHES, ETC.). ALL FINISHED PRUNING TO BE DONE ACCORDING TO RECOGNIZED, APPROVED STANDARDS OF THE INDUSTRY (REFERENCE THE "NATIONAL ARBORIST ASSOCIATION PRUNING STANDARDS FOR SHADE TREES").
16. THE CONTRACTOR IS TO INSPECT THE CONTROLS AT WEEKLY INTERVALS AND AFTER EVERY RAINFALL EXCEEDING 1/4 INCH TO VERIFY THAT THEY HAVE NOT BEEN SIGNIFICANTLY DISTURBED. ANY ACCUMULATED SEDIMENT AFTER A SIGNIFICANT RAINFALL TO BE REMOVED AND PLACED IN THE OWNER DESIGNATED SPOIL DISPOSAL SITE. THE CONTRACTOR TO CONDUCT PERIODIC INSPECTIONS OF ALL EROSION/SEDIMENTATION CONTROLS AND TO MAKE ANY REPAIRS OR MODIFICATIONS NECESSARY TO ASSURE CONTINUED EFFECTIVE OPERATION OF EACH DEVICE.
17. WHERE THERE IS TO BE AN APPROVED GRADE CHANGE, IMPERMEABLE PAVING SURFACE, TREE WELL, OR OTHER SUCH SITE DEVELOPMENT IMMEDIATELY ADJACENT TO A PROTECTED TREE, ERECT THE FENCE APPROXIMATELY TWO TO FOUR FEET (2'–4') BEHIND THE AREA IN QUESTION.
18. NO ABOVE AND/OR BELOW GROUND TEMPORARY FUEL STORAGE FACILITIES TO BE STORED ON THE PROJECT SITE.
19. IF EROSION AND SEDIMENTATION CONTROL SYSTEMS ARE EXISTING FROM PRIOR CONTRACTS, OWNER'S REPRESENTATIVE AND THE CONTRACTOR TO EXAMINE THE EXISTING EROSION AND SEDIMENTATION CONTROL SYSTEMS FOR DAMAGE PRIOR TO CONSTRUCTION. ANY DAMAGE TO PREEXISTING EROSION AND SEDIMENTATION CONTROLS NOTED TO BE REPAIRED AT OWNERS EXPENSE.
20. INTENTIONAL RELEASE OF VEHICLE OR EQUIPMENT FLUIDS ONTO THE GROUND IS NOT ALLOWED. CONTAMINATED SOIL RESULTING FROM ACCIDENTAL SPILL TO BE REMOVED AND DISPOSED OF PROPERLY.

The Architect/Engineer assumes responsibility for appropriate use of this standard.

REVISION NOTE: ADOPTED 6/21/2006

CITY OF GEORGETOWN
CONSTRUCTION STANDARDS AND DETAILS
EROSION AND SEDIMENTATION AND TREE PROTECTION NOTES

DRAWING NAME: EC01A | SCALE: NTS | DATE: 1/2003 | DRAWN BY: MRS | APPROVED BY: TRB

DETAIL B
NTS

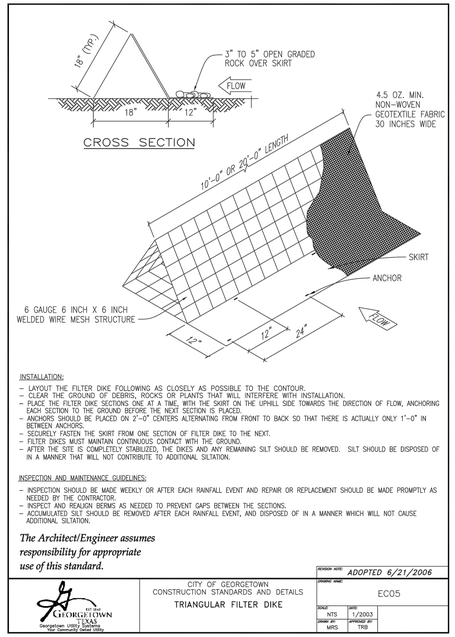

INSTALLATION:
- LAYOUT THE FILTER DIKE FOLLOWING AS CLOSELY AS POSSIBLE TO THE CONTOUR.
- CLEAR THE GROUND OF DEBRIS, ROCKS OR PLANTS THAT WILL INTERFERE WITH INSTALLATION.
- PLACE THE FILTER DIKE SECTIONS ONE AT A TIME, WITH THE SKIRT ON THE UPHILL SIDE TOWARDS THE DIRECTION OF FLOW, ANCHORING EACH SECTION TO THE GROUND BEFORE THE NEXT SECTION IS PLACED.
- ANCHORS SHOULD BE PLACED ON 2'–0" CENTERS ALTERNATING FROM FRONT TO BACK SO THAT THERE IS ACTUALLY ONLY 1'–0" IN BETWEEN ANCHORS.
- SECURELY FASTEN THE SKIRT FROM ONE SECTION OF FILTER DIKE TO THE NEXT.
- FILTER DIKES MUST MAINTAIN CONTINUOUS CONTACT WITH THE GROUND.
- AFTER THE SITE IS COMPLETELY STABILIZED, THE DIKES AND ANY REMAINING SILT SHOULD BE REMOVED. SILT SHOULD BE DISPOSED OF IN A MANNER THAT WILL NOT CONTRIBUTE TO ADDITIONAL SILTATION.

INSPECTION AND MAINTENANCE GUIDELINES:
- INSPECTION SHOULD BE MADE WEEKLY OR AFTER EACH RAINFALL EVENT AND REPAIR OR REPLACEMENT SHOULD BE MADE PROMPTLY AS NEEDED BY THE CONTRACTOR.
- INSPECT AND REALIGN BERMS AS NEEDED TO PREVENT GAPS BETWEEN THE SECTIONS.
- ACCUMULATED SILT SHOULD BE REMOVED AFTER EACH RAINFALL EVENT, AND DISPOSED OF IN A MANNER WHICH WILL NOT CAUSE ADDITIONAL SILTATION.

The Architect/Engineer assumes responsibility for appropriate use of this standard.

REVISION NOTE: ADOPTED 6/21/2006

CITY OF GEORGETOWN
CONSTRUCTION STANDARDS AND DETAILS
TRIANGULAR FILTER DIKE

DRAWING NAME: EC05 | SCALE: NTS | DATE: 1/2003 | DRAWN BY: MRS | APPROVED BY: TRB

DETAIL C
NTS

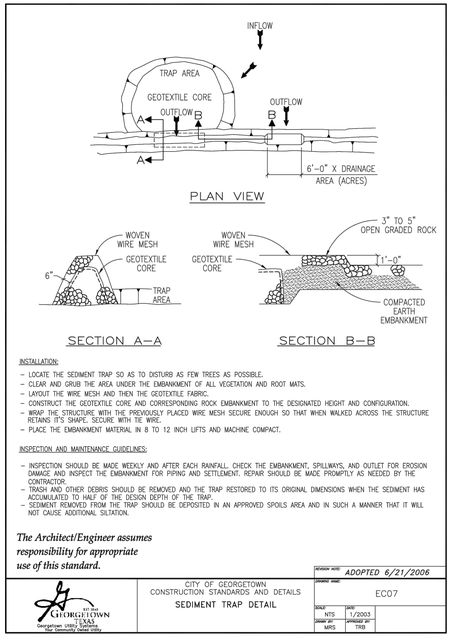

INSTALLATION:
- LOCATE THE SEDIMENT TRAP SO AS TO DISTURB AS FEW TREES AS POSSIBLE.
- CLEAR AND GRUB THE AREA UNDER THE EMBANKMENT OF ALL VEGETATION AND ROOT MATS.
- LAYOUT THE WIRE MESH AND THEN THE GEOTEXTILE FABRIC.
- CONSTRUCT THE GEOTEXTILE CORE AND CORRESPONDING ROCK EMBANKMENT TO THE DESIGNATED HEIGHT AND CONFIGURATION.
- WRAP THE STRUCTURE WITH THE PREVIOUSLY PLACED WIRE MESH SECURE ENOUGH SO THAT WHEN WALKED ACROSS THE STRUCTURE RETAINS IT'S SHAPE. SECURE WITH TIE WIRE.
- PLACE THE EMBANKMENT MATERIAL IN 8 TO 12 INCH LIFTS AND MACHINE COMPACT.

INSPECTION AND MAINTENANCE GUIDELINES:
- INSPECTION SHOULD BE MADE WEEKLY AND AFTER EACH RAINFALL. CHECK THE EMBANKMENT, SPILLWAYS, AND OUTLET FOR EROSION DAMAGE AND INSPECT THE EMBANKMENT FOR PIPING AND SETTLEMENT. REPAIR SHOULD BE MADE PROMPTLY AS NEEDED BY THE CONTRACTOR.
- TRASH AND OTHER DEBRIS SHOULD BE REMOVED AND THE TRAP RESTORED TO ITS ORIGINAL DIMENSIONS WHEN THE SEDIMENT HAS ACCUMULATED TO HALF OF THE DESIGN DEPTH OF THE TRAP.
- SEDIMENT REMOVED FROM THE TRAP SHOULD BE DEPOSITED IN AN APPROVED SPOILS AREA AND IN SUCH A MANNER THAT IT WILL NOT CAUSE ADDITIONAL SILTATION.

The Architect/Engineer assumes responsibility for appropriate use of this standard.

REVISION NOTE: ADOPTED 6/21/2006

CITY OF GEORGETOWN
CONSTRUCTION STANDARDS AND DETAILS
SEDIMENT TRAP DETAIL

DRAWING NAME: EC07 | SCALE: NTS | DATE: 1/2003 | DRAWN BY: MRS | APPROVED BY: TRB

DETAIL D
NTS

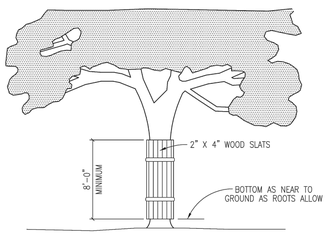

NOTES:
1. WHERE ANY EXCEPTIONS RESULT IN A FENCE BEING CLOSER THAN FOUR FEET (4'–0") TO A TREE TRUNK; PROTECT THE TRUNK WITH STRAPPED–ON–PLANKING TO A HEIGHT OF EIGHT FEET (8'–0"), OR TO THE LIMITS OF LOWER BRANCHING IN ADDITION TO THE REDUCED FENCING PROVIDED.
2. ANY ROOTS EXPOSED BY CONSTRUCTION ACTIVITY SHALL BE PRUNED FLUSH WITH THE SOIL. BACKFILL ROOT AREAS WITH GOOD QUALITY TOP SOIL AS SOON AS POSSIBLE. IF EXPOSED ROOT AREAS ARE NOT BACKFILLED WITHIN TWO (2) DAYS, COVER THEM WITH ORGANIC MATERIAL IN A MANNER WHICH REDUCES SOIL TEMPERATURE, AND MINIMIZES WATER LOSS DUE TO EVAPORATION.
3. PRIOR EXCAVATION OR GRADE CUTTING WITHIN TREE DRIPLINE, MAKE A CLEAN CUT BETWEEN THE DISTURBED AND UNDISTURBED ROOT ZONES WITH A ROCK SAW OR SIMILAR EQUIPMENT, TO MINIMIZE DAMAGE TO REMAINING ROOTS.
4. TREES MOST HEAVILY IMPACTED BY CONSTRUCTION ACTIVITIES SHOULD BE WATERED DEEPLY ONCE A WEEK DURING PERIODS OF HOT, DRY WEATHER. TREE CROWNS SHOULD BE SPRAYED WITH WATER PERIODICALLY TO REDUCE DUST ACCUMULATION ON THE LEAVES.
5. ANY TRENCHING REQUIRED FOR THE INSTALLATION OF LANDSCAPE IRRIGATION SHALL BE PLACED AS FAR FROM EXISTING TREE TRUNKS AS POSSIBLE.
6. NO LANDSCAPE TOPSOIL DRESSING GREATER THE FOUR INCHES (4") SHALL BE PERMITTED WITHIN THE DRIPLINE OF A TREE. NO SOIL IS PERMITTED ON THE ROOT FLARE OF ANY TREE.
7. PRUNING TO PROVIDE CLEARANCE FOR STRUCTURES, VEHICULAR TRAFFIC AND EQUIPMENT SHALL TAKE PLACE BEFORE CONSTRUCTION BEGINS.

The Architect/Engineer assumes responsibility for appropriate use of this standard.

REVISION NOTE: ADOPTED 6/21/2006

CITY OF GEORGETOWN
CONSTRUCTION STANDARDS AND DETAILS
TREE PROTECTION – WOOD SLATS

DRAWING NAME: EC10 | SCALE: NTS | DATE: 1/2003 | DRAWN BY: MRS | APPROVED BY: TRB

DETAIL E
NTS

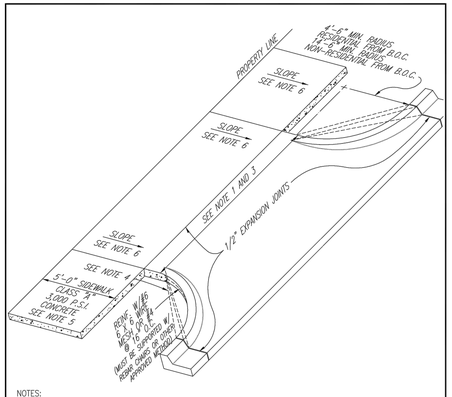

NOTES:
1. MAXIMUM WIDTH OF APPROACH SHALL BE 24'–0" FOR RESIDENTIAL, 30'–0" FOR NON–RESIDENTIAL UNDIVIDED AND 45'–0" FOR NON–RESIDENTIAL DIVIDED.
2. DRIVEWAY PERMITS TO BE ACQUIRED FROM CITY INSPECTION OFFICE.
3. MINIMUM WIDTH OF APPROACH SHALL BE 10'–0" FOR RESIDENTIAL AND 15'–0" FOR NON–RESIDENTIAL.
4. LINEAR "RADIUS" AT CORNERS, PERMITTED FOR "SINGLE FAMILY" OR "TWO FAMILY" RESIDENTIAL DRIVEWAY APPROACH.
5. SIDEWALK LOCATION TO BE APPROVED BY CITY ENGINEER PRIOR TO FINAL DESIGN.
6. SLOPE 1/8" PER FOOT USUAL, NOT TO EXCEED 1/4" PER FOOT.
7. DRIVEWAY APPROACH THICKNESS TO BE A MIN. OF 6".

The Architect/Engineer assumes responsibility for appropriate use of this standard.

REVISION NOTE: ADOPTED 6/21/2006

CITY OF GEORGETOWN
CONSTRUCTION STANDARDS AND DETAILS
CONCRETE DRIVEWAY APPROACH TYPICAL

DRAWING NAME: SD15 | SCALE: NTS | DATE: 1/2003 | DRAWN BY: MRS | APPROVED BY: TRB

DETAIL F
NTS

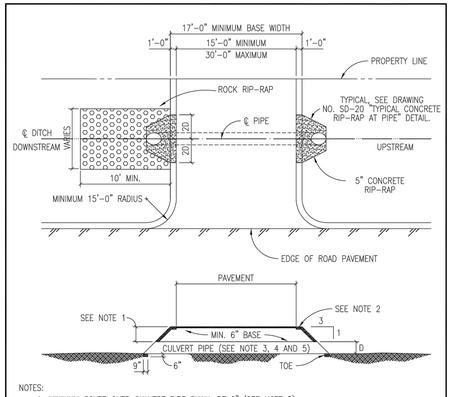

NOTES:
1. MINIMUM COVER OVER CULVERT PIPE SHALL BE 6" (SEE NOTE 5).
2. 5" CONCRETE RIP–RAP SHALL BE INSTALLED.
3. CULVERT PIPE TO BE MINIMUM OF 12" DIAMETER.
4. CULVERT PIPE MATERIAL TO BE R.C.P. (CLASS III), UNLESS PRIOR APPROVAL IS GRANTED BY THE CITY OF GEORGETOWN.
5. MINIMUM COVER OVER CULVERT PIPE SHALL PROVIDE H20 LOADING.
6. BACKFILL AROUND CULVERT PIPE SHALL BE SELECT MATERIAL TO BE PLACED AND COMPACTED TO 95% TEX–114E.
7. ROCK RIP–RAP SHALL SHALL EXTEND 10' FROM THE DOWN STREAM SIDE USING THE AVERAGE STONE SIZE DIA. OF 8" AT A DEPTH OF 16" (MINIMUM).
8. MINIMUM CHANNEL SIDE SLOPE SHALL BE 4:1.

The Architect/Engineer assumes responsibility for appropriate use of this standard.

REVISION NOTE: ADOPTED 6/21/2006

CITY OF GEORGETOWN
CONSTRUCTION STANDARDS AND DETAILS
RURAL NON–RESIDENTIAL UNDIVIDED DRIVEWAY APPROACH WITH CULVERT PIPE

DRAWING NAME: SD18 | SCALE: NTS | DATE: 1/2003 | DRAWN BY: MRS | APPROVED BY: TRB

DETAIL G
NTS

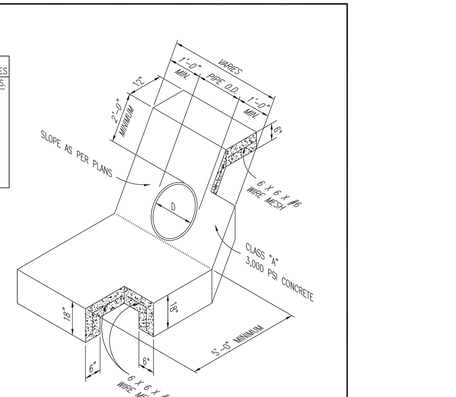

NOTES:
1. WHEN HEADWALLS AND WINGWALLS ARE REQUIRED; THEY SHALL CONFORM TO THE TEXAS DEPARTMENT OF TRANSPORTATION STANDARDS, OR AS DIRECTED BY THE CITY.
2. ENERGY DISSIPATERS SHALL BE REQUIRED IF PIPE VELOCITY IS GREATER THAN 5.0 F.P.S. OR AS DIRECTED BY THE CITY OF GEORGETOWN.
3. SUPPORT REINFORCING WIRE MESH REQUIRED AS SUPPORT FOR APPROACH SLAB AND SHALL BE SUPPORTED BY REBAR CHAIRS OR OTHER APPROVED METHODS.

The Architect/Engineer assumes responsibility for appropriate use of this standard.

REVISION NOTE: ADOPTED 6/21/2006

CITY OF GEORGETOWN
CONSTRUCTION STANDARDS AND DETAILS
TYPICAL CONCRETE RIP–RAP AT PIPE

DRAWING NAME: SD19 | SCALE: NTS | DATE: 1/2003 | DRAWN BY: MRS | APPROVED BY: TRB

DETAIL H
NTS

STATE OF TEXAS
GERALD S. FURRIER
129811
LICENSED PROFESSIONAL ENGINEER
12/11/2023

REV. NO.	DATE	DRWN	CHKD	REMARKS

DESIGNED BY: A. KAJALE
DRAWN BY: S. DHANGAR
SHEET CHK'D BY: M. MAHADEVAN
CROSS CHK'D BY: A. KAJALE
APPROVED BY: G. FURRIER
DATE: DECEMBER 2023

CDM Smith
8310-1 N Capital of Texas Hwy, Suite 250
Austin, TX 78731
Tel: (512) 346-1100
TBPELS Firm Registration No. F-3043

CITY OF GEORGETOWN, TEXAS

CEDAR BREAKS AND D B WOOD LIFT STATIONS

CIVIL STANDARD DETAILS V

PROJECT NO. 2048–272644
FILE NAME: C005STDT

SHEET NO.
CD-5

XREFs: [REVIN_G-FURRIER_South lake to South fork_Border] Images: []
Last saved by: MAHADEVANM Time: 12/13/2023 6:48:40 PM
C:\pw_pt\MAHADEVANM\35980821\C005STDT.dwg
© 2023 CDM SMITH ALL RIGHTS RESERVED.
REUSE OF DOCUMENTS: THESE DOCUMENTS AND DESIGNS PROVIDED BY PROFESSIONAL SERVICE, INCORPORATED HEREIN, ARE THE PROPERTY OF CDM SMITH AND ARE NOT TO BE USED, IN WHOLE OR PART, FOR ANY OTHER PROJECT WITHOUT THE WRITTEN AUTHORIZATION OF CDM SMITH.
Plotted: 12/13/2023 2:46:08 PM

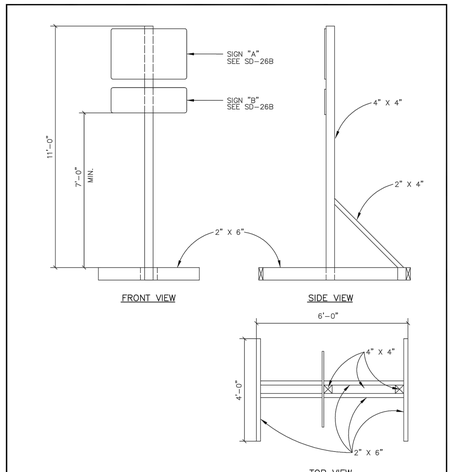

NOTES:
1. ALL MATERIALS SHALL BE FURNISHED BY THE CONTRACTOR WITH THE EXCEPTION OF THE CITY OF GEORGETOWN G.U.S. LOGO WHICH WILL BE FURNISHED BY THE CITY.
2. ALL SIGNS TO BE IN CONFORMANCE WITH THE CURRENT EDITION OF THE TEXAS MANUAL OF UNIFORM TRAFFIC CONTROL DEVICES (TMUTCD).

The Architect/Engineer assumes responsibility for appropriate use of this standard.

REVISION NOTE: ADOPTED 6/21/2006

CITY OF GEORGETOWN
CONSTRUCTION STANDARDS AND DETAILS
PROJECT SIGN TYPE II

DRAWING NAME: SD26
SCALE: NTS | DATE: 1/2003
DRAWN BY: MRS | APPROVED BY: TRB

DETAIL A
NTS

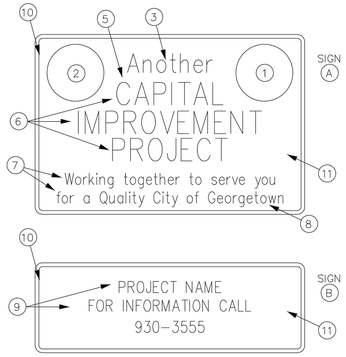

NOTES:
1. CITY SEAL (FURNISHED BY THE CITY)
2. G.U.S. LOGO (FURNISHED BY THE CITY)
3. (1 3/4") BLUE LETTERS
4. (2 1/2") BLUE LETTERS
5. (1 1/4") SPACE
6. (3") BLUE LETTERS
7. (2") RED UPPER, (1 1/2") RED LOWER CASE LETTERS
8. (2") BLUE UPPER, (1 1/2") BLUE LOWER CASE LETTERS (City of Georgetown)
9. (10") LETTERS
10. (1 3/8") BLUE BORDER
11. REFLECTIVE SILVER SHEETING .080 ALUMINUM 2290, TRANSPARENT RED PAINT 712, BLUE PAINT 710, 3M CO. OR APPROVED EQUIVALENT.
12. REFER TO SHEET SD-26A

The Architect/Engineer assumes responsibility for appropriate use of this standard.

REVISION NOTE: ADOPTED 6/21/2006

CITY OF GEORGETOWN
CONSTRUCTION STANDARDS AND DETAILS
STANDARD STREET SIGN DETAIL II

DRAWING NAME: SD27
SCALE: NTS | DATE: 1/2003
DRAWN BY: MRS | APPROVED BY: TRB

DETAIL B
NTS

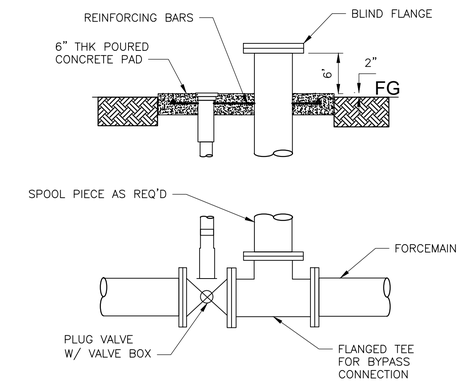

FORCEMAIN BYPASS CONNECTION

DETAIL E
NTS

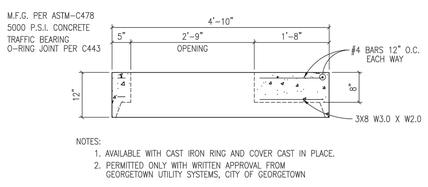

NOTES:
1. AVAILABLE WITH CAST IRON RING AND COVER CAST IN PLACE.
2. PERMITTED ONLY WITH WRITTEN APPROVAL FROM GEORGETOWN UTILITY SYSTEMS, CITY OF GEORGETOWN

The Architect/Engineer assumes responsibility for appropriate use of this standard.

REVISION NOTE: ADOPTED 6/21/2006

CITY OF GEORGETOWN
CONSTRUCTION STANDARDS AND DETAILS
48" MANHOLE FLAT LID

DRAWING NAME: WW09
SCALE: NTS | DATE: 1/2003
DRAWN BY: MRS | APPROVED BY: TRB

DETAIL C
NTS

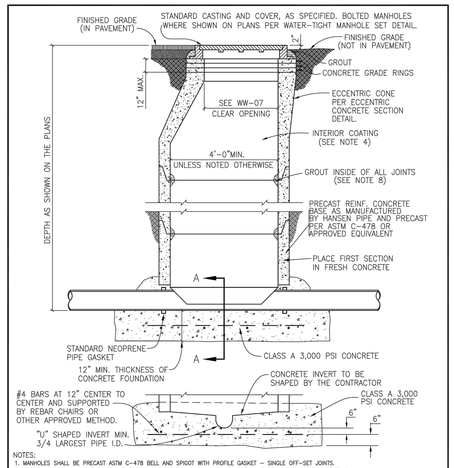

NOTES:
1. MANHOLES SHALL BE PRECAST ASTM C-478 BELL AND SPIGOT WITH PROFILE GASKET – SINGLE OFF-SET JOINTS.
2. SEE PLANS AND MANHOLE SCHEDULE, FOR MANHOLE SIZE, LOCATION, CONFIGURATION, TYPE OF TOP SECTION, VENTING REQUIREMENTS, PIPE SIZE AND TYPES.
3. SEE SPECIFICATIONS ON MATERIALS AND CONSTRUCTION.
4. AN 80 MIL COAT OF RAVEN LINING SYSTEMS, RAVEN 405 ULTRA HIGH BUILD EPOXY COATING, OR SPRAY WALL EPOXY COATING, OR APPROVED EQUAL, TO BE APPLIED TO ENTIRE INTERIOR OF EACH WASTEWATER MANHOLE AND UNDERSIDE OF FLAT TOPS.
5. ALL MANHOLE COVERS SHALL BE BOLTED AND GASKETTED WHEN MANHOLES ARE LOCATED OUT FROM PAVEMENT.
6. MANHOLES TO BE VENTED ARE IDENTIFIED ON MANHOLE SCHEDULE. REFERENCE MANHOLE VENT DETAIL.
7. MANHOLES ARE TO BE DESIGNED TO RESIST LATERAL AND VERTICAL SOIL FORCES RESULTING FROM MANHOLE DEPTH. ADDITIONALLY, MANHOLES LOCATED IN PAVEMENT TO BE DESIGNED FOR HS-20 TRAFFIC LOADS.
8. GROUT SHALL MEET THE REQUIREMENTS AS STATED BY THE COATING MANUFACTURER.
9. MANHOLE BASE BEDDING MATERIAL SPECS. FOR 3/4" WASHED GRAVEL:
   SIEVE SIZE 2", PERCENT (%) RETAINED 0 SIEVE SIZE 1 1/2", % RETAINED 0-10
   SIEVE SIZE 1", % RETAINED 45-80 SIEVE SIZE 3/4", % RETAINED 85-100
   SIEVE SIZE 3/8", % RETAINED 95-100
10. ALL PVC PIPE SHALL BE REMOVED FROM INVERT.

The Architect/Engineer assumes responsibility for appropriate use of this standard.

REVISION NOTE: ADOPTED 6/21/2006

CITY OF GEORGETOWN
CONSTRUCTION STANDARDS AND DETAILS
PRECAST MANHOLE ON
CAST-IN-PLACE FOUNDATION

DRAWING NAME: WW20
SCALE: NTS | DATE: 1/2006
DRAWN BY: MRS | APPROVED BY: TRB

DETAIL D
NTS

GERALD S. FURRIER
STATE OF TEXAS
129811
LICENSED
PROFESSIONAL ENGINEER
12/11/2023

REV. NO.	DATE	DRWN	CHKD	REMARKS

DESIGNED BY: A. KAJALE
DRAWN BY: S. DHANGAR
SHEET CHK'D BY: M. MAHADEVAN
CROSS CHK'D BY: A. KAJALE
APPROVED BY: G. FURRIER
DATE: DECEMBER 2023

CDM Smith
8310-1 N Capital of Texas Hwy, Suite 250
Austin, TX 78731
Tel: (512) 346-1100
TBPELS Firm Registration No. F-3043

CITY OF GEORGETOWN, TEXAS

CEDAR BREAKS AND D B WOOD LIFT STATIONS

CIVIL STANDARD DETAILS VI

PROJECT NO. 2048-272644
FILE NAME: C006STDT

SHEET NO.
CD-6

XREFs: [REVW_G-FURRIER_South lake to South fork_Border] Images: []
Last saved by MAHADEVANM Time: 12/13/2023 9:58:44 PM
C:\pw_ul1\MAHADEVANM\36908621\C006STDT.dwg
© 2023 CDM SMITH ALL RIGHTS RESERVED
REUSE OF DOCUMENTS: THESE DOCUMENTS AND DESIGNS PROVIDED BY PROFESSIONAL SERVICE, INCORPORATED HEREIN, ARE THE PROPERTY OF CDM SMITH AND ARE NOT TO BE USED, IN WHOLE OR PART, FOR ANY OTHER PROJECT WITHOUT THE WRITTEN AUTHORIZATION OF CDM SMITH.
Plotted: 12/13/2023 2:46:37 PM

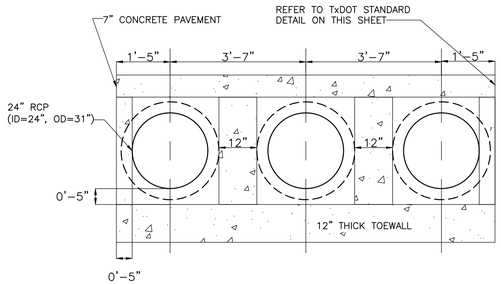

24" RCP SAFETY END TREATMENT

DETAIL A
NTS

NOTE:

1. RCP MITERED ENDS SHALL BE INSTALLED AT 6:1 CROSS SLOPE OR FLATTER.

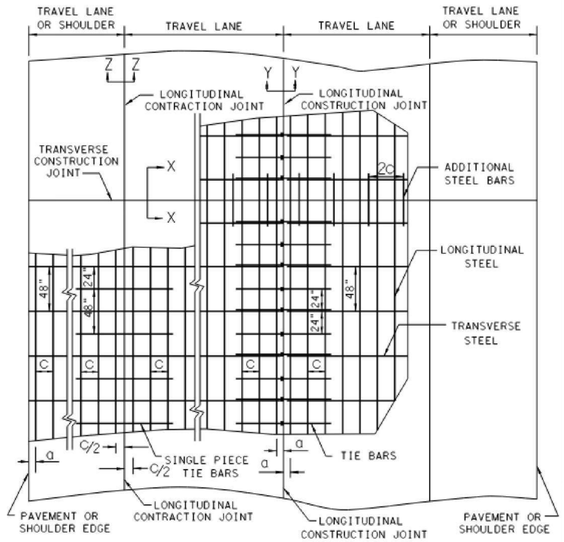

TYPICAL PAVEMENT LAYOUT

PLAN VIEW (NOT TO SCALE)

DETAIL B
NTS

TABLE NO. 1 LONGITUDINAL STEEL					
SLAB THICKNESS AND BAR SIZE		REGULAR STEEL BARS	FIRST SPACING AT EDGE OR JOINT	ADDITIONAL STEEL BARS AT TRANSVERSE CONSTRUCTION JOINT (SECTION X-X)	
T (IN.)	BAR SIZE	SPACING C (IN.)	SPACING a (IN.)	SPACING 2 X C (IN.)	LENGTH L (IN.)
7.0	#5	6.5	3 TO 4	13	50
7.5	#5	6.0	3 TO 4	12	50
8.0	#6	9.0	3 TO 4	18	50
8.5	#6	8.5	3 TO 4	17	50
9.0	#6	8.0	3 TO 4	16	50
9.5	#6	7.5	3 TO 4	15	50
10.0	#6	7.0	3 TO 4	14	50
10.5	#6	6.75	3 TO 4	13.5	50
11.0	#6	6.5	3 TO 4	13	50
11.5	#6	6.25	3 TO 4	12.5	50
12.0	#6	6.0	3 TO 4	12	50
12.5	#6	5.75	3 TO 4	11.5	50
13.0	#6	5.5	3 TO 4	11	50

TABLE NO. 2 TRANSVERSE STEEL AND TIE BARS						
SLAB THICKNESS (IN.)	TRANSVERSE STEEL		TIE BARS AT LONGITUDINAL CONTRACTION JOINT (SECTION Z-Z)		TIE BARS AT LONGITUDINAL CONSTRUCTION JOINT (SECTION Y-Y)	
	BAR SIZE	SPACING (IN.)	BAR SIZE	SPACING (IN.)	BAR SIZE	SPACING (IN.)
7.0 - 7.5	#5	48	#5	48	#5	24
8.0 - 13.0	#5	48	#6	48	#6	24

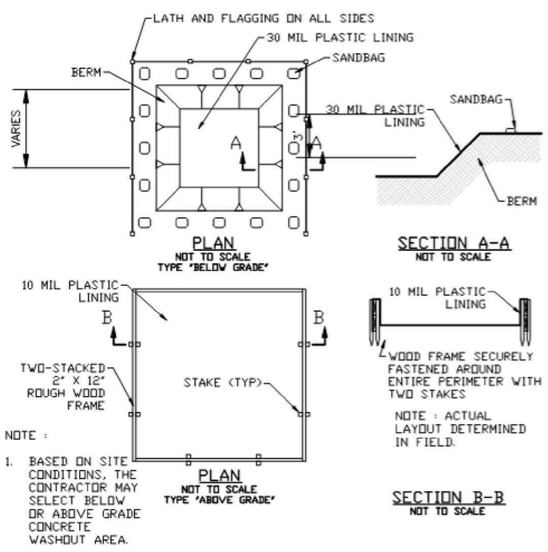

NOTE :

1. BASED ON SITE CONDITIONS, THE CONTRACTOR MAY SELECT BELOW OR ABOVE GRADE CONCRETE WASHOUT AREA.

DETAIL C
NTS

GENERAL NOTES

1. DETAILS FOR PAVEMENT WIDTH, PAVEMENT THICKNESS AND THE CROWN CROSS-SLOPE SHALL BE SHOWN ELSEWHERE IN THE PLANS. PAVEMENTS WIDER THAN 100 FT. WITHOUT A FREE LONGITUDINAL JOINT ARE NOT COVERED BY THIS STANDARD.
2. USE COARSE AGGREGATES WITH A RATED COEFFICIENT OF THERMAL EXPANSION (CoTE) OF NOT MORE THAN 5.5 X 10^{-6} IN/IN/ °F AS LISTED IN THE CONCRETE RATED SOURCE QUALITY CATALOG (CRSQC).
3. ALL THE REINFORCING STEEL AND TIE BARS SHALL BE DEFORMED STEEL BARS CONFORMING TO ASTM A 615 (GRADE 60) OR ASTM A 996 (GRADE 60) OR ABOVE. STEEL BAR SIZES AND SPACINGS SHALL CONFORM TO TABLE NO. 1 AND TABLE NO. 2.
4. STEEL BAR PLACEMENT TOLERANCE SHALL BE +/- 1 IN. HORIZONTALLY AND +/- 0.5 IN. VERTICALLY. CALCULATED AVERAGE BAR SPACING (CONCRETE PLACEMENT WIDTH / NUMBER OF LONGITUDINAL BARS) SHALL CONFORM TO TABLE NO. 1
5. PAVEMENT WIDTHS OF MORE THAN 15 FT. SHALL HAVE A LONGITUDINAL JOINT (SECTION Z-Z OR SECTION Y-Y). THESE JOINTS SHALL BE LOCATED WITHIN 6 IN. OF THE LANE LINE UNLESS THE JOINT LOCATION IS SHOWN ELSEWHERE ON THE PLANS.
6. THE SAW CUT DEPTH FOR THE LONGITUDINAL CONTRACTION JOINT (SECTION Z-Z) SHALL BE ONE THIRD OF THE SLAB THICKNESS (T/3).
7. WHEN TYING CONCRETE GUTTER AT A LONGITUDINAL JOINT, THE TIE BAR LENGTH OR POSITION MAY BE ADJUSTED. PROVIDE 3 IN. OF CONCRETE COVER FROM THE BACK OF GUTTER TO THE END OF TIE BAR.
8. REPLACE MISSING OR DAMAGED TIE BARS WITHOUT ADDITIONAL COMPENSATION BY DRILLING MIN. 10 IN. DEEP AND GROUTING TIE BARS WITH TYPE III, CLASS C EPOXY. MEET THE PULL-OUT TEST REQUIREMENTS IN ITEM 361.
9. OMIT TIE BARS LOCATED WITHIN 18-IN. OF THE TRANSVERSE CONSTRUCTION JOINTS (SECTION X-X). USE HAND-OPERATED IMMERSION VIBRATORS TO CONSOLIDATE THE CONCRETE ADJACENT TO ALL FORMED JOINTS.
10. LONGITUDINAL REINFORCING STEEL SPLICES SHALL BE A MINIMUM OF 25 IN. STAGGER THE LAP LOCATIONS SO THAT NO MORE THAN 1/3 OF THE LONGITUDINAL STEEL IS SPLICED IN ANY GIVEN 12-FT. WIDTH AND 2-FT. LENGTH OF THE PAVEMENT.
11. THE DETAIL FOR THE JOINT SEALANT AND RESERVOIR IS SHOWN ON STANDARD SHEET "CONCRETE PAVING DETAILS, JOINT SEALS."

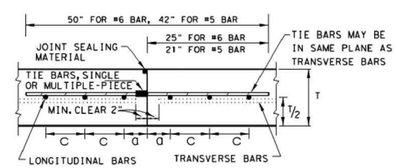

LONGITUDINAL CONSTRUCTION JOINT
SECTION Y - Y

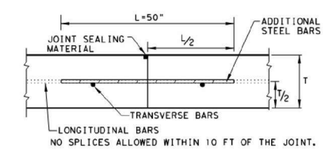

TRANSVERSE CONSTRUCTION JOINT
SECTION X - X

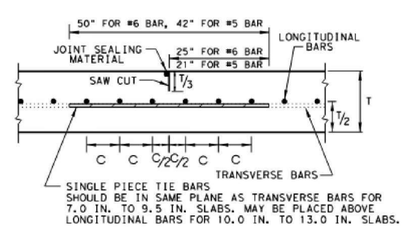

LONGITUDINAL CONTRACTION JOINT
SECTION Z - Z

STATE OF TEXAS
GERALD S. FURRIER
129811
LICENSED
PROFESSIONAL ENGINEER
12/11/2023

REV. NO.	DATE	DRWN	CHKD	REMARKS

DESIGNED BY: A. KAJALE
DRAWN BY: S. DHANGAR
SHEET CHK'D BY: M. MAHADEVAN
CROSS CHK'D BY: A. KAJALE
APPROVED BY: G. FURRIER
DATE: DECEMBER 2023

CDM Smith
8310-1 N Capital of Texas Hwy, Suite 250
Austin, TX 78731
Tel: (512) 346-1100
TBPELS Firm Registration No. F-3043

CITY OF GEORGETOWN, TEXAS

CEDAR BREAKS AND D B WOOD LIFT STATIONS

CIVIL STANDARD DETAILS VII

PROJECT NO. 2048-272644
FILE NAME: C007STDT
SHEET NO.
CD-7

XREFs: [South lake to South fork_Border] Images: []
Last saved by: MAHADEVANM, Time: 12/13/2023 9:32:12 PM
C:\pw_pt\MAHADEVANM\d3908821\C007STDT.dwg
© 2023 CDM SMITH ALL RIGHTS RESERVED.
REUSE OF DOCUMENTS: THESE DOCUMENTS AND DESIGNS PROVIDED BY PROFESSIONAL SERVICE, INCORPORATED HEREIN, ARE THE PROPERTY OF CDM SMITH AND ARE NOT TO BE USED, IN WHOLE OR PART, FOR ANY OTHER PROJECT WITHOUT THE WRITTEN AUTHORIZATION OF CDM SMITH.

Plotted: 12/13/2023 2:47:05 PM

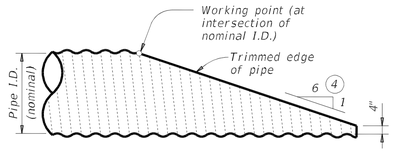

NOTE: All cross pipes, calculations, and dimensions are based on the pipe culverts mitered as shown in this detail. Alternate styles of mitered ends will require that appropriate adjustments be made to the values presented on this standard.

SIDE ELEVATION OF TYPICAL PIPE CULVERT MITER

(Showing corrugated metal pipe (CMP) culvert Details at reinforced concrete pipe (RCP) culvert are similar.)

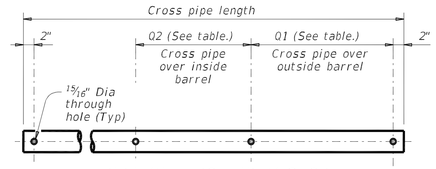

PIPE WITH BOLTED ANCHOR

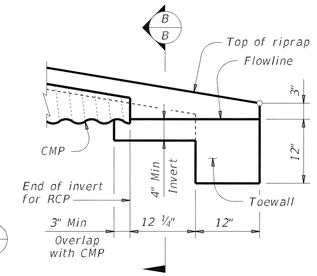

DETAIL "A"

(Showing invert with corrugated metal pipe (CMP) culvert. Reinforced concrete pipe (RCP) culvert details are similar. Cross pipes not shown for clarity.)

CROSS PIPE LENGTHS, REQUIRED PIPE SIZES, AND RIPRAP QUANTITIES (2)							
Nominal Culvert I.D.	Conc Riprap (CY) (6)	Pipe Culvert Spa ~ G	Single Barrel ~ Q1	Multi-Barrel ~ Q1	Q2	Conditions for Use of Cross Pipes	Cross Pipe Sizes
24"	0.9	1'-7"	N/A	3'-6"	3'-7"	3 or more pipe culverts	3" Std (3.500" O.D.)

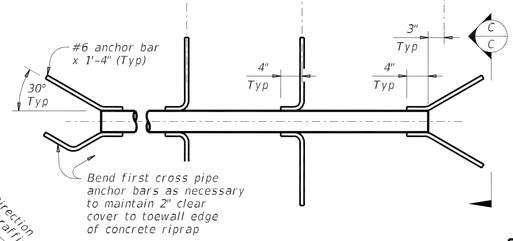

PIPE WITH ANCHOR BARS

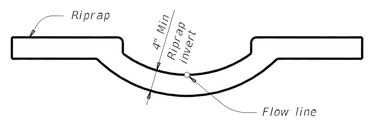

SECTION B-B

(Cross pipes not shown for clarity.)

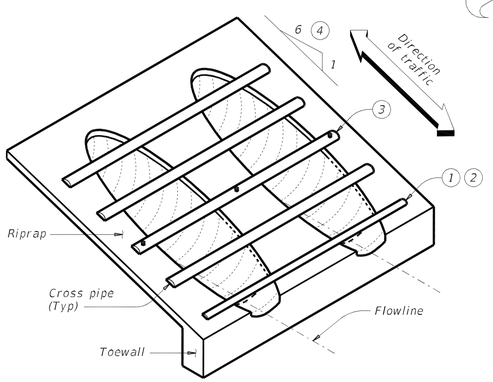

ISOMETRIC VIEW OF TYPICAL INSTALLATION

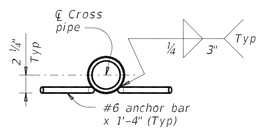

SECTION C-C

CROSS PIPE DETAILS

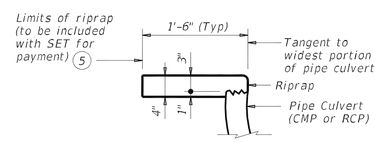

SHOWING TYPICAL PIPE CULVERT AND RIPRAP

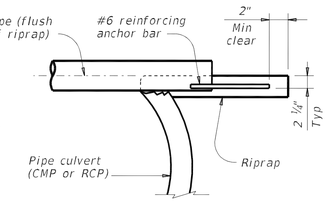

SHOWING CROSS PIPE WITH ANCHOR BAR

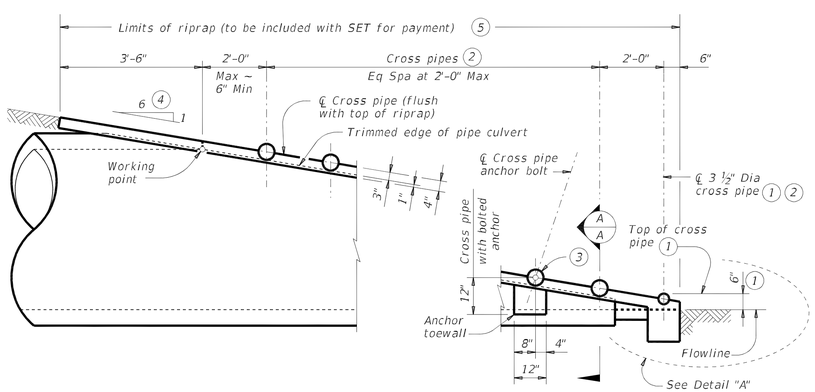

SIDE ELEVATION OF CAST-IN-PLACE CONCRETE

(Showing reinforced concrete pipe (RCP) culvert. Details at corrugated metal pipe (CMP) culvert are similar.)

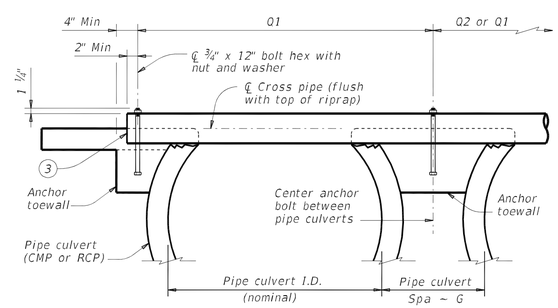

SHOWING CROSS PIPE WITH BOLTED ANCHOR

SECTION A-A

(1) The proper installation of the first cross pipe is critical for vehicle safety. Place the top of the first cross pipe no more than 6" above the flow line.

(2) Provide cross pipes, except the first bottom pipe, of the size shown in the table. Provide a 3 1#2" standard pipe (4" O.D.) for the first bottom pipe.

(3) Install the third cross pipe from the bottom of the culvert using a bolted connection. Ensure that riprap concrete does not flow into the cross pipe so as to permit disassembly of the bolted connection to allow cleanout access. At the Contractor's option, install all other cross pipes using the bolted connection details.

(4) Match cross slope as shown elsewhere in the plans. Cross slope of 6:1 or flatter is required for vehicle safety.

(5) Riprap placed beyond the limits shown will be paid for as concrete riprap in accordance with Item 432, "Riprap."

(6) Quantities shown are for one end of one reinforced concrete pipe (RCP) culvert. For multiple pipe culverts or for corrugated metal pipe (CMP) culverts, quantities will need to be adjusted. Riprap quantities are for contractor's information only.

MATERIAL NOTES:

Synthetic fibers listed on the "Fibers for Concrete" Material Producer List (MPL) may be used in lieu of steel reinforcing in riprap concrete unless noted otherwise.

Provide cross pipes that meet the requirements of ASTM A53 (Type E or S, Gr B), ASTM A500 (Gr B), or API 5LX52.

Provide ASTM A307 bolts and nuts.

Galvanize all steel components, except concrete reinforcing, after fabrication. Repair galvanizing damaged during transport or construction in accordance with the specifications.

GENERAL NOTES:

Cross pipes are designed for a traversing load of 10,000 pounds at yield as recommended by Research Report 280-2F, "Safety Treatment of Roadside Parallel-Drainage Structures", Texas Transportation Institute, March 1981.

Safety end treatments (SET) shown herein are intended for use in those installations where out of control vehicles are likely to traverse the openings approximately perpendicular to the cross pipes.

Construct concrete riprap and all necessary inverts in accordance with the requirements of Item 432, "Riprap."

Payment for riprap and toewall is included in the Price Bid for each Safety End Treatment.

Texas Department of Transportation — Bridge Division Standard

SAFETY END TREATMENT
FOR 12" DIA TO 72" DIA PIPE CULVERTS TYPE II ~ PARALLEL DRAINAGE
SETP-PD

FILE: CD-SETP-PD-20.dgn	DN: GAF	CK: CAT	DW: JRP	CK: GAF
©TxDOT February 2020	CONT	SECT	JOB	HIGHWAY
REVISIONS	DIST		COUNTY	SHEET NO.

STATE OF TEXAS — GERALD S. FURRIER — 129811 — LICENSED PROFESSIONAL ENGINEER — 12/11/2023

REV. NO.	DATE	DRWN	CHKD	REMARKS

DESIGNED BY: A. KAJALE
DRAWN BY: S. DHANGAR
SHEET CHK'D BY: M. MAHADEVAN
CROSS CHK'D BY: A. KAJALE
APPROVED BY: G. FURRIER
DATE: DECEMBER 2023

CDM Smith
8310-1 N Capital of Texas Hwy, Suite 250
Austin, TX 78731
Tel: (512) 346-1100
TBPELS Firm Registration No. F-3043

CITY OF GEORGETOWN, TEXAS

CEDAR BREAKS AND D B WOOD LIFT STATIONS

CIVIL STANDARD DETAILS VIII

PROJECT NO. 2048-272644
FILE NAME: C008STDT

SHEET NO.
CD-8

XREFs: [REVW; G-FURRIER; South lake to South fork_Border] Images: []
Last saved by: MAHADEVANM, Time: 12/13/2023 6:48:33 PM
C:\pw_pt\MAHADEVANM\0398821\C008STDT.dwg
© 2023 CDM SMITH ALL RIGHTS RESERVED.
REUSE OF DOCUMENTS: THESE DOCUMENTS AND DESIGNS PROVIDED BY PROFESSIONAL SERVICE, INCORPORATED HEREIN, ARE THE PROPERTY OF CDM SMITH AND ARE NOT TO BE USED, IN WHOLE OR PART, FOR ANY OTHER PROJECT WITHOUT THE WRITTEN AUTHORIZATION OF CDM SMITH.
Plotted: 12/13/2023 2:48:38 PM

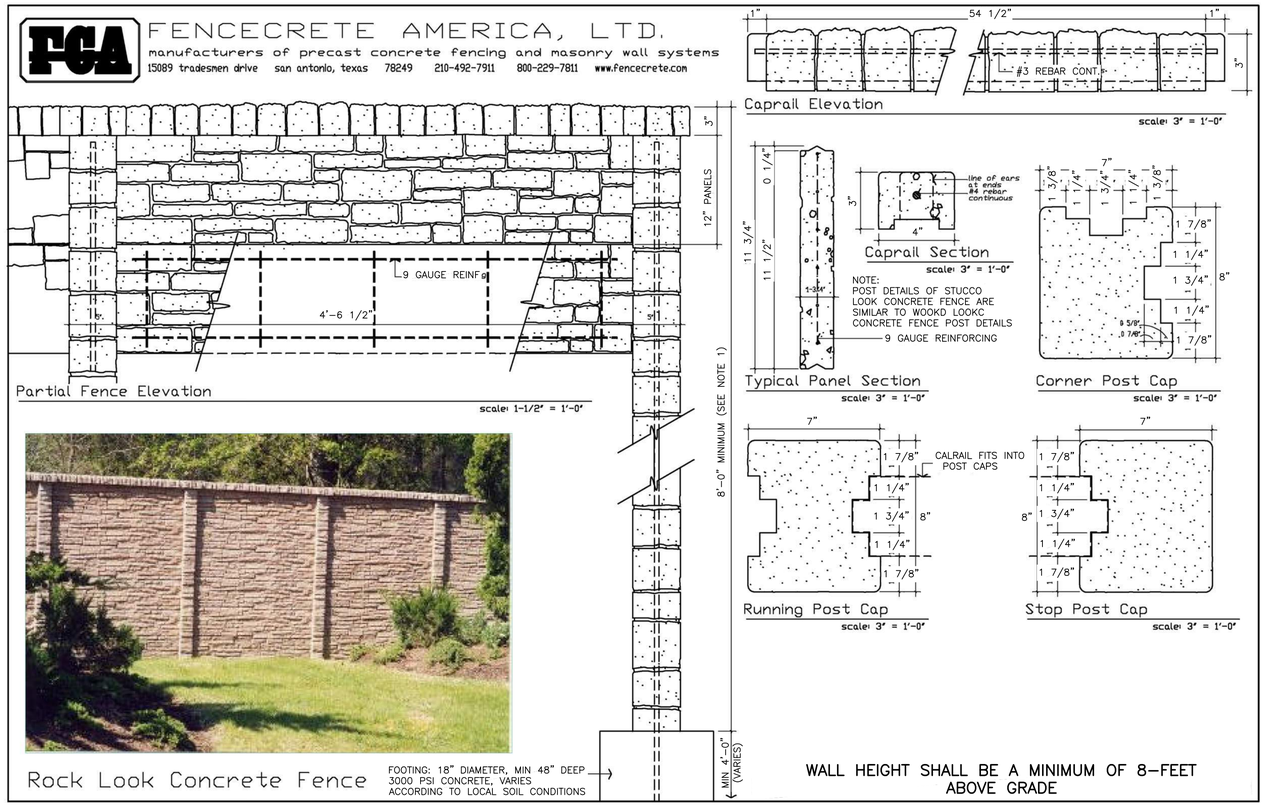

DETAIL A
NTS

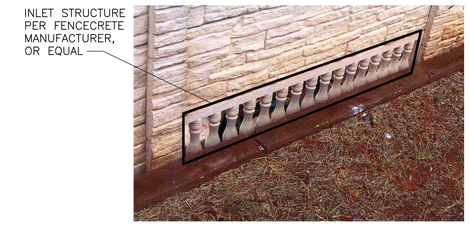

FENCECRETE DRAINAGE INLET

DETAIL B
NTS

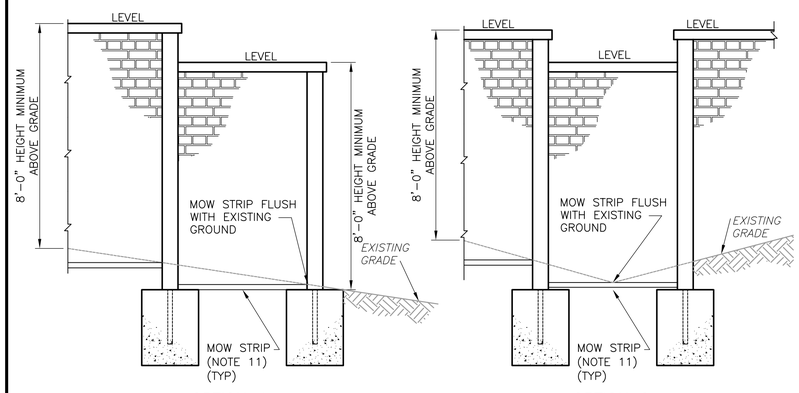

FENCECRETE WALL

DETAIL C
3/8 = 1'-0"

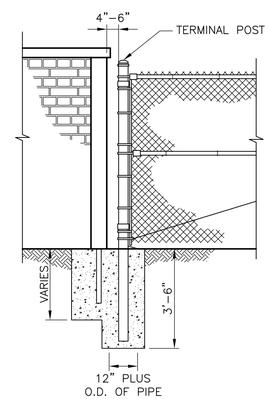

FENCECRETE FENCE JUNCTION WITH CHAIN LINK FENCE

DETAIL D
3/8 = 1'-0"

NOTE:

CONTRACTOR SHALL PROVIDE DRAINAGE PANEL(S) ADEQUATE FOR EXISTING DRAINAGE.

FENCE NOTES:

1. THE COLUMN HEIGHT SHALL BE A MINIMUM OF 8'-0" TO A MAXIMUM OF 14'-0" – WITH 8'-0" ABOVE GRADE.
2. ALL CONCRETE SHALL BE 3000 PSI.
3. ALL REINFORCEMENT SHALL BE ASTM 615 GRADE 60. SPECIAL REINFORCEMENT IS AVAILABLE UPON SPECIAL ORDER.
4. FOOTING – MINIMUM 4-FT UP TO 6-FT DEEP FOOTING STANDARD PER COLUMN. DEPTH AND DIAMETER CAN VARY PER LOCAL SOIL CONDITIONS. FENCING CONTRACTOR SHALL SUBMIT SEALED DESIGN CALCULATIONS BY TEXAS PE.
5. TEXTURE: ALL EXPOSED SIDES HAVE ROCK-LIKE TEXTURE.
6. GATES: SHALL HAVE ADDITIONAL STEEL SUPPORTS ADJACENT TO CONCRETE COLUMNS.
7. ALL STEEL REINFORCEMENT IS PREWELDED WITH STEEL SPACERS SO AS TO ALLOW FOR MAXIMUM CONCRETE COVERAGE.
8. A SPECIAL SILICONE SEALANT IS USED TO LOCK THE CAPRAIL AND POST CAPS IN PLACE. THIS SEALANT REQUIRES SPECIAL TOOLS FOR REMOVAL.
9. PROVIDE OPENINGS FOR DRAINAGE AS DIRECTED BY THE MANUFACTURER.
10. OWNER SHALL SELECT COLOR.
11. CONTRACTOR SHALL PROVIDE 18"W X 4" THICK CONCRETE MOW STRIP W/6" X 6" W1.4 X W1.4 WIRE FABRIC CENTERED IN CONCRETE.
12. CONTRACTOR IS RESPONSIBLE FOR DESIGNING AND FOR INSTALLING THE FENCE SYSTEM SUCH THAT THE GAP UNDER THE BOTTOM SIDE OF PANEL, ESPECIAL ON STEEPER SLOPING AREAS, COMPLIES WITH SITE SECURITY REQUIREMENTS.

NOTE:
THESE ARE STANDARD CIVIL DETAILS. ALL DETAILS ON CZ DRAWINGS MAY NOT APPLY TO THIS PROJECT. IT IS THE CONTRACTOR'S RESPONSIBILITY TO DETERMINE WHICH DETAILS ARE NEEDED BASED UPON INFORMATION SHOWN ON THE DRAWINGS.

STATE OF TEXAS
GERALD S. FURRIER
129811
LICENSED PROFESSIONAL ENGINEER
12/11/2023

REV. NO.	DATE	DRWN	CHKD	REMARKS

DESIGNED BY: A. KAJALE
DRAWN BY: S. DHANGAR
SHEET CHK'D BY: M. MAHADEVAN
CROSS CHK'D BY: A. KAJALE
APPROVED BY: G. FURRIER
DATE: DECEMBER 2023

CDM Smith
8310-1 N Capital of Texas Hwy, Suite 250
Austin, TX 78731
Tel: (512) 346-1100
TBPELS Firm Registration No. F-3043

CITY OF GEORGETOWN, TEXAS

CEDAR BREAKS AND D B WOOD LIFT STATIONS

CIVIL STANDARD DETAILS IX

PROJECT NO. 2048-272644
FILE NAME: C009STDT

SHEET NO.
CD-9

XREFs: [South lake to South fork_Border] Images: [FENCECRETE INLET_XC-PY-DTFNC]
Last saved by: MAHADEVANM Time: 12/13/2023 6:48:44 PM
C:\pw_pt\MAHADEVANM\d3908821\C009STDT.dwg
© 2023 CDM SMITH ALL RIGHTS RESERVED.
REUSE OF DOCUMENTS: THESE DOCUMENTS AND DESIGNS PROVIDED BY PROFESSIONAL SERVICE, INCORPORATED HEREIN, ARE THE PROPERTY OF CDM SMITH AND ARE NOT TO BE USED, IN WHOLE OR PART, FOR ANY OTHER PROJECT WITHOUT THE WRITTEN AUTHORIZATION OF CDM SMITH.

Plotted: 12/13/2023 2:49:21 PM

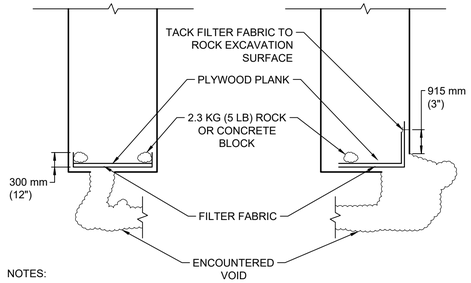

NOTES:

1. PLACE TEMPORARY PROTECTION WITHIN TRENCH TO COVER VOID AS INDICATED. FABRIC SHALL EXTEND A MINIMUM OF 915 mm (3') BEYOND EDGE OF VOID. PLACE A PLYWOOD PLANK (MINIMUM 0.75" (19 mm) THICK) OVER FABRIC. PLANK AND FABRIC SHALL BE WEIGHTED AS REQUIRED BY ROCK 2.3 KG (5 LB) OR CONCRETE BLOCK TO SECURE FILTER FABRIC.
2. TEMPORARY PROTECTION SHALL BE IN PLACE AT ALL TIMES THAT CONSTRUCTION OPERATIONS ARE NOT IN ACTUAL PROGRESS.
3. CONSTRUCTION OPERATIONS WITHIN 7.6 m (25') SHALL NOT PROGRESS DURING OCCURRENCE OF RAIN TO ALLOW FOR PROTECTION OF VOID DURING A RAIN EVENT.
4. LOCALIZED EROSION MEASURES (SILT FENCE OR TRIANGULAR FILTER DIKES) SHALL BE INSTALLED ALONG THE TRENCH TO ENSURE THAT LOOSE SPOILS OR RUNOFF DO NOT ENTER THE TRENCH OR AFFECT PERFORMANCE OF TEMPORARY PROTECTION.
5. SPECIAL CARE SHALL BE TAKE TO ENSURE THAT EROSION CONTROL MEASURES REQUIRED ALONG THE TRENCH ARE MAINTAINED, CLEANED AND FULLY FUNCTIONAL.
6. PROCEDURES AND MATERIAL REQUIREMENTS OUTLINED IN STANDARD SPEC. 025731 SHALL BE FOLLOWED.
7. FILTER FABRIC AND ROCK OR CONCRETE BLOCKS AND PLYWOOD PLANK SHALL BE REMOVED FROM THE TRENCH WHEN PERMANENT VOID MITIGATION MEASURES ARE INSTALLED.

CLASS I – TEMPORARY PROTECTION OF VOID AT BOTTOM OF TRENCH

DETAIL A
NTS –

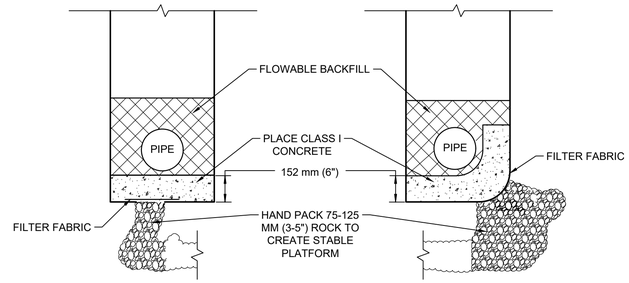

NOTES:

1. PROCEDURES AND MATERIAL REQUIREMENTS OUTLINED IN STANDARD SPEC. 025731 SHALL BE FOLLOWED.
2. VOID OPENING MAY REQUIRE REINFORCEMENT OR SUPPORT IF LARGER THAN 915 mm (3") IN WIDTH OR LENGTH. INSTALL AT DIRECTION OF THE ENGINEER OR DESIGNATED REPRESENTATIVE.
3. CLASS I CONCRETE SHALL CONFORM TO STANDARD SPEC. C-2. PLACE A FORM TO ENSURE MINIMUM THICKNESS OF 457 mm (18") EXTENDING A MINIMUM OF 150 mm (6") BEYOND THE EDGE OF THE VOID.

CLASS II – PERMANENT VOID MITIGATION MEASURES

DETAIL B
NTS –

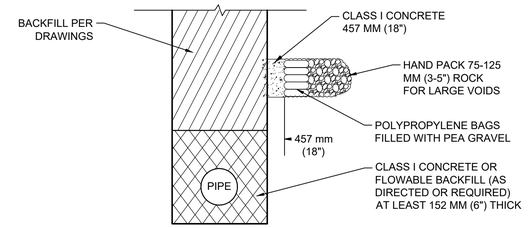

MITIGATION MEASURE A

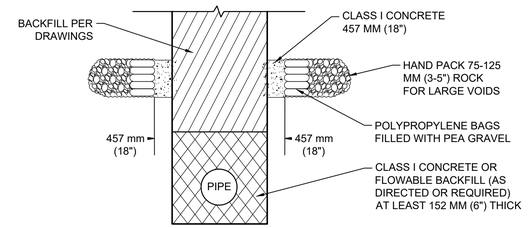

MITIGATION MEASURE B

CLASS III – VOID MITIGATION MEASURES

DETAIL C
NTS –

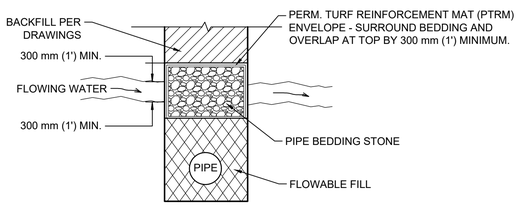

TRANSVERSE PROFILE

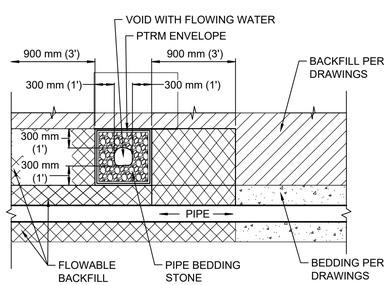

LONGITUDINAL PROFILE

CLASS V – WATER FLOW MITIGATION MEASURES GROUNDWATER ABOVE BEDDING MATERIAL DEPTH

DETAIL D
NTS –

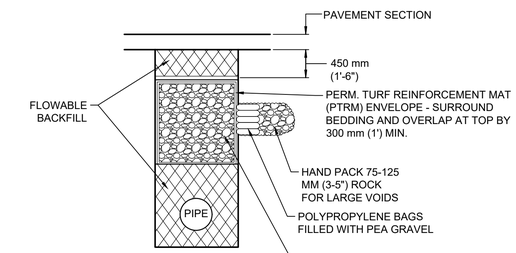

A – VOID MITIGATION TRANSVERSE PROFILE

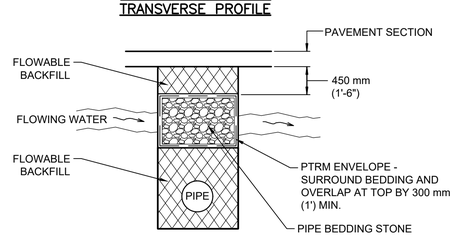

B – FLOWING WATER MITIGATION TRANSVERSE PROFILE

NOTE: PROCEDURES AND MATERIAL REQUIREMENTS OUTLINED IN STANDARD SPEC. 025731 TO BE FOLLOWED.

MODIFIED CLASS V – COMBINATION VOID AND POTENTIAL WATER FLOW MITIGATION MEASURES

DETAIL E
NTS –

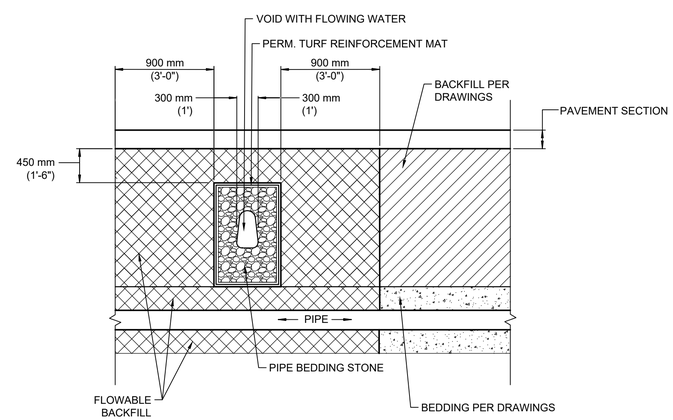

C – FLOWING WATER MITIGATION LONGITUDINAL PROFILE

NOTE: PROCEDURES AND MATERIAL REQUIREMENTS OUTLINED IN STANDARD SPEC. 025731 TO BE FOLLOWED.

MODIFIED CLASS V – COMBINATION VOID AND POTENTIAL WATER FLOW MITIGATION MEASURES

DETAIL F
NTS –

STATE OF TEXAS
GERALD S. FURRIER
129811
LICENSED
PROFESSIONAL ENGINEER
12/11/2023

REV. NO.	DATE	DRWN	CHKD	REMARKS
A	8/3/22	DWS	ALH	CONFORMED DRAWINGS

DESIGNED BY: A. KAJALE
DRAWN BY: S. DHANGAR
SHEET CHK'D BY: M. MAHADEVAN
CROSS CHK'D BY: A. RHAMES
APPROVED BY: A. HINDS
DATE: DECEMBER 2023

CDM Smith
8310-1 N Capital of Texas Hwy, Suite 250
Austin, TX 78731
Tel: (512) 346-1100
TBPELS Firm Registration No. F-3043

CITY OF GEORGETOWN, TEXAS

CEDAR BREAKS AND D B WOOD LIFT STATIONS

VOID MITIGATION DETAILS

PROJECT NO. 2048-272644
FILE NAME: C01OSTDT.DWG
SHEET NO.
CD-10

XREFs: [CDMS_2234] Images: []
Last saved by: RHAMESAD Time: 1/6/2019 12:53:46 PM
C:\Admex\Thomeso\d029798\C2OSSTDT.dwg
©2023 CDM SMITH ALL RIGHTS RESERVED
REUSE OF DOCUMENTS: THESE DOCUMENTS AND DESIGNS PROVIDED BY PROFESSIONAL SERVICE, INCORPORATED HEREIN, ARE THE PROPERTY OF CDM SMITH AND ARE NOT TO BE USED, IN WHOLE OR PART, FOR ANY OTHER PROJECT WITHOUT THE WRITTEN AUTHORIZATION OF CDM SMITH.

Plotted: 12/13/2023 2:49:53 PM

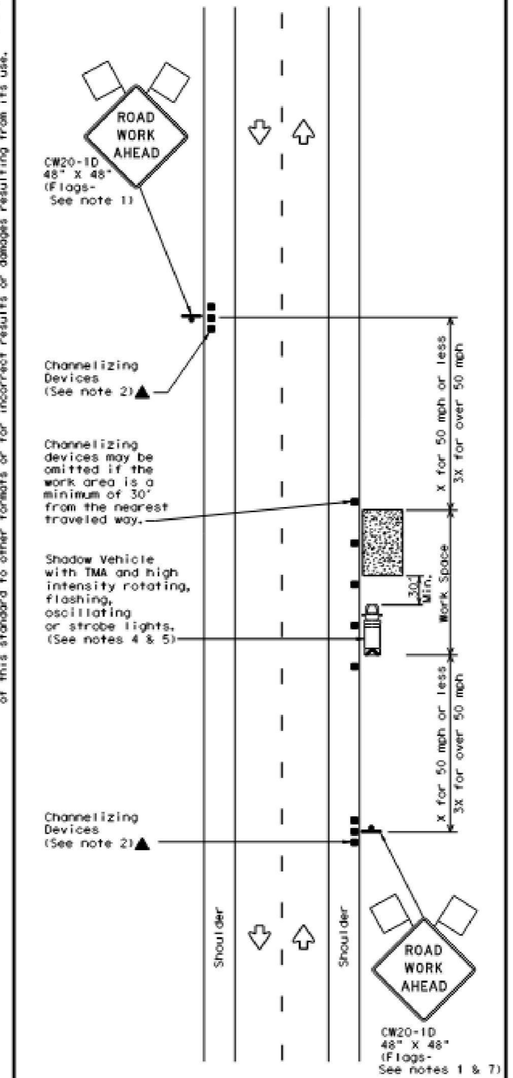

TCP (1-1a)

WORK SPACE NEAR SHOULDER

Conventional Roads

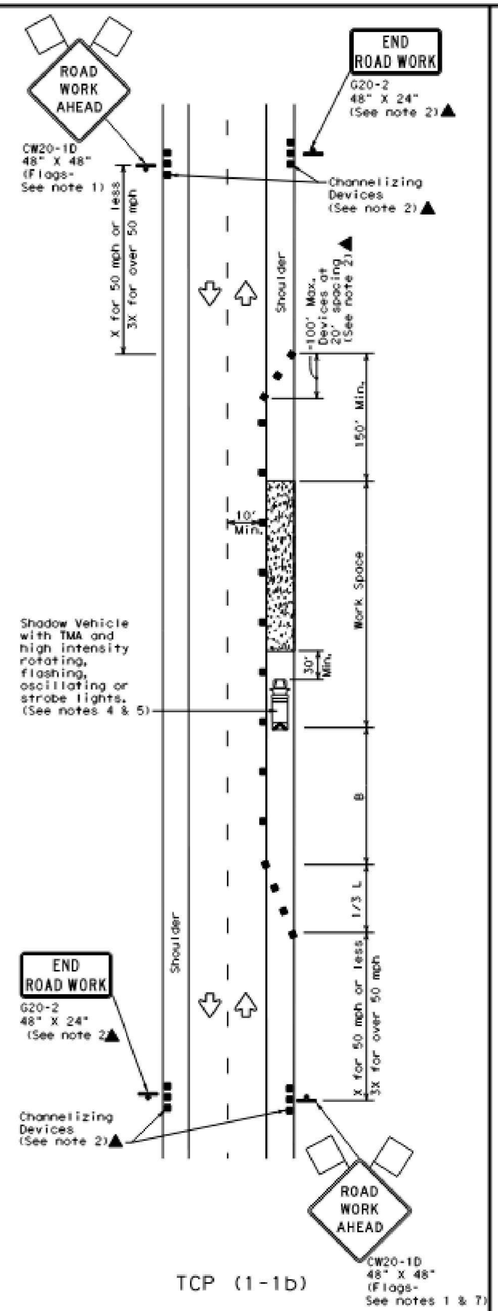

TCP (1-1b)

WORK SPACE ON SHOULDER

Conventional Roads

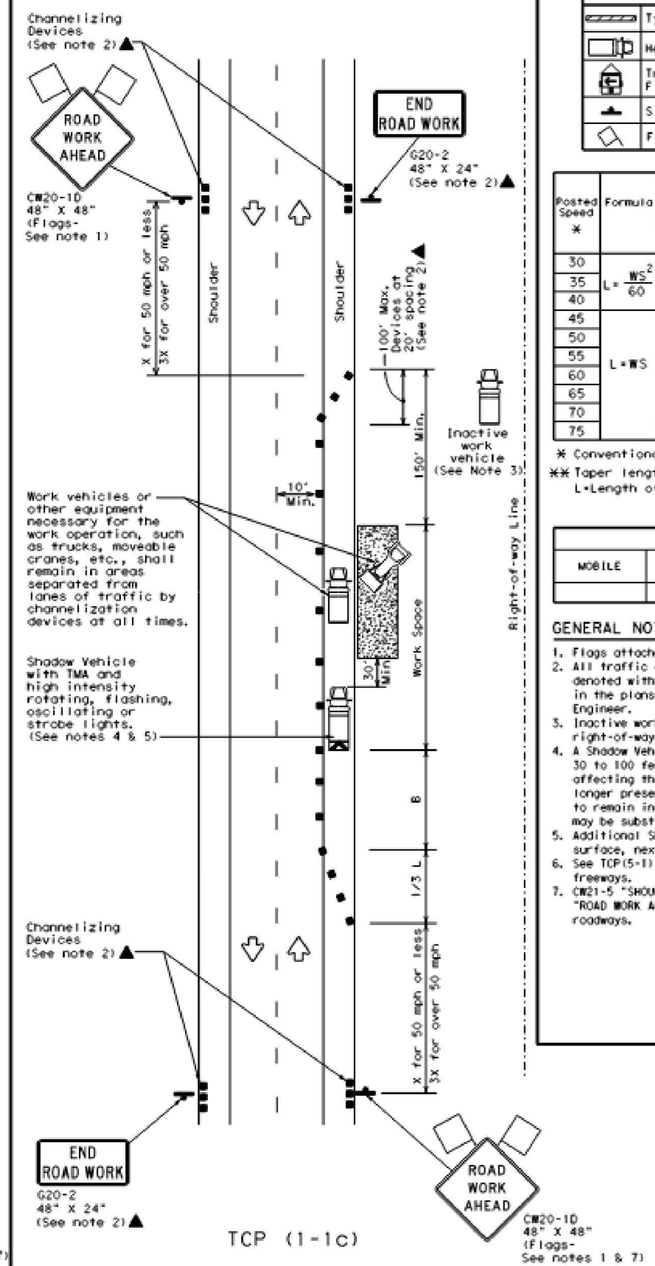

TCP (1-1c)

WORK VEHICLES ON SHOULDER

Conventional Roads

LEGEND			
	Type 3 Barricade		Channelizing Devices
	Heavy Work Vehicle		Truck Mounted Attenuator (TMA)
	Trailer Mounted Flashing Arrow Board		Portable Changeable Message Sign (PCMS)
	Sign		Traffic Flow
	Flag		Flagger

Posted Speed *	Formula	Minimum Desirable Taper Lengths ** 10' Offset	11' Offset	12' Offset	Suggested Maximum Spacing of Channelizing Devices On a Taper	On a Tangent	Minimum Sign Spacing "X" Distance	Suggested Longitudinal Buffer Space "B"
30	$L = \frac{WS^2}{60}$	150'	165'	180'	30'	60'	120'	90'
35		205'	225'	245'	35'	70'	160'	120'
40		265'	295'	320'	40'	80'	240'	155'
45	L=WS	450'	495'	540'	45'	90'	320'	195'
50		500'	550'	600'	50'	100'	400'	240'
55		550'	605'	660'	55'	110'	500'	295'
60		600'	660'	720'	60'	120'	600'	350'
65		650'	715'	780'	65'	130'	700'	410'
70		700'	770'	840'	70'	140'	800'	475'
75		750'	825'	900'	75'	150'	900'	540'

* Conventional Roads Only

** Taper lengths have been rounded off.
L=Length of Taper(FT) W=Width of Offset(FT) S=Posted Speed(MPH)

TYPICAL USAGE				
MOBILE	SHORT DURATION	SHORT TERM STATIONARY	INTERMEDIATE TERM STATIONARY	LONG TERM STATIONARY
	✓	✓		

GENERAL NOTES

1. Flags attached to signs where shown are REQUIRED.
2. All traffic control devices illustrated are REQUIRED, except those denoted with the triangle symbol may be omitted when stated elsewhere in the plans, or for routine maintenance work, when approved by the Engineer.
3. Inactive work vehicles or other equipment should be parked near the right-of-way line and not parked on the paved shoulder.
4. A Shadow Vehicle with a TMA should be used anytime it can be positioned 30 to 100 feet in advance of the area of crew exposure without adversely affecting the performance or quality of the work. If workers are no longer present but road or work conditions require the traffic control to remain in place, Type 3 Barricades or other channelizing devices may be substituted for the Shadow Vehicle and TMA.
5. Additional Shadow Vehicles with TMAs may be positioned off the paved surface, next to those shown in order to protect wider work spaces.
6. See TCP(5-1) for shoulder work on divided highways, expressways and freeways.
7. CW21-5 "SHOULDER WORK" signs may be used in place of CW20-1D "ROAD WORK AHEAD" signs for shoulder work on conventional roadways.

Texas Department of Transportation — Traffic Operations Division Standard

TRAFFIC CONTROL PLAN CONVENTIONAL ROAD SHOULDER WORK

TCP(1-1)-18

FILE: tcp1-1-18.dgn	DN:	CK:	DW:	CK:
© TxDOT December 1985	CONT	SECT	JOB	HIGHWAY
REVISIONS 2-94 4-98 / 8-95 2-12 / 1-97 2-18	DIST		COUNTY	SHEET NO.

GERALD S. FURRIER — STATE OF TEXAS — LICENSED PROFESSIONAL ENGINEER 129811 — 12/11/2023

DISCLAIMER:
The use of this standard is governed by the "Texas Engineering Practice Act". No warranty of any kind is made by TxDOT for any purpose whatsoever. TxDOT assumes no responsibility for the conversion of this standard to other formats or for incorrect results or damages resulting from its use.

DATE:
FILE:

REV. NO.	DATE	DRWN	CHKD	REMARKS
A	8/3/22	DWS	ALH	CONFORMED DRAWINGS

DESIGNED BY: A. KAJALE
DRAWN BY: S. DHANGAR
SHEET CHK'D BY: M. MAHADEVAN
CROSS CHK'D BY: A. RHAMES
APPROVED BY: A. HINDS
DATE: DECEMBER 2023

CDM Smith
8310-1 N Capital of Texas Hwy, Suite 250
Austin, TX 78731
Tel: (512) 346-1100
TBPELS Firm Registration No. F-3043

CITY OF GEORGETOWN, TEXAS

CEDAR BREAKS AND D B WOOD LIFT STATIONS

TRAFFIC CONTROL DETAIL I

PROJECT NO. 2048-272644
FILE NAME: C011 STDT.DWG
SHEET NO.
CD-11

PROPERTY OF CDM SMITH AND ARE NOT TO BE USED, IN WHOLE OR PART, FOR ANY OTHER PROJECT WITHOUT THE WRITTEN AUTHORIZATION OF CDM SMITH.
XREFs: [CDMS_2234] Images: []
Last saved by: RHAMESAD Time: 1/6/2019 12:53:46 PM
C:\cdmext\rhamesad\a0297581\C20SSTDT.dwg
©2023 CDM SMITH ALL RIGHTS RESERVED.
REUSE OF DOCUMENTS: THESE DOCUMENTS AND DESIGNS PROVIDED BY PROFESSIONAL SERVICE, INCORPORATED HEREIN, ARE THE PROPERTY OF CDM SMITH.
Plotted: 12/13/2023 7:04:58 PM

DISCLAIMER:
The use of this standard is governed by the "Texas Engineering Practice Act". No warranty of any kind is made by TxDOT for any purpose whatsoever. TxDOT assumes no responsibility for the conversion of this standard to other formats or for incorrect results or damages resulting from its use.

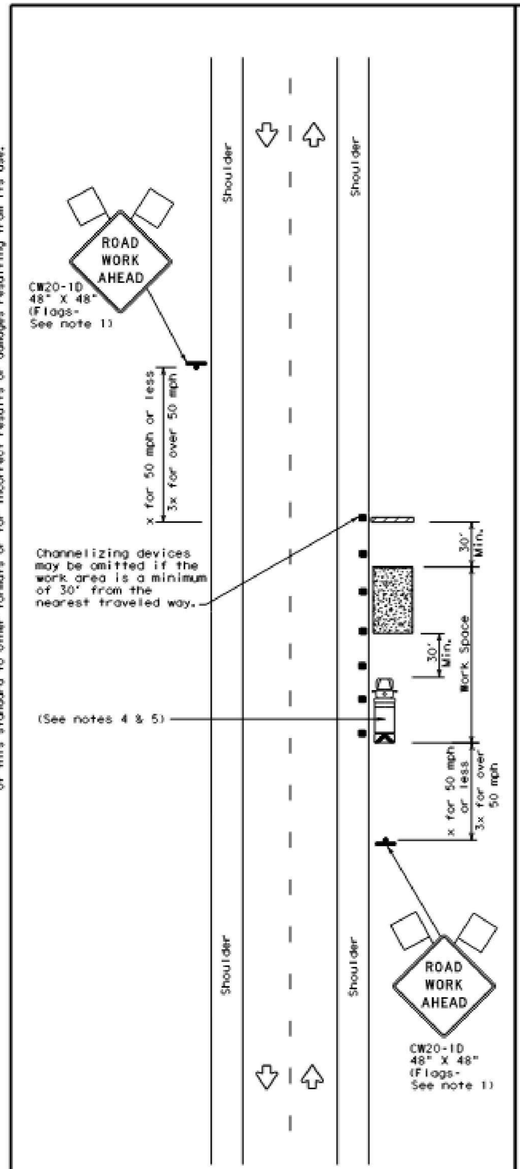

TCP (2-1a)

WORK SPACE NEAR SHOULDER

Conventional Roads

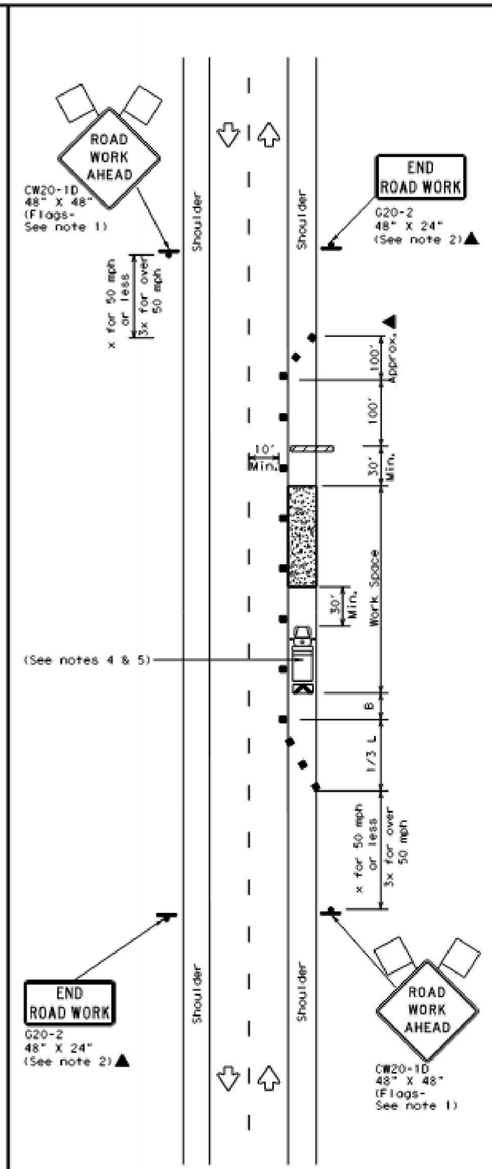

TCP (2-1b)

WORK SPACE ON SHOULDER

Conventional Roads

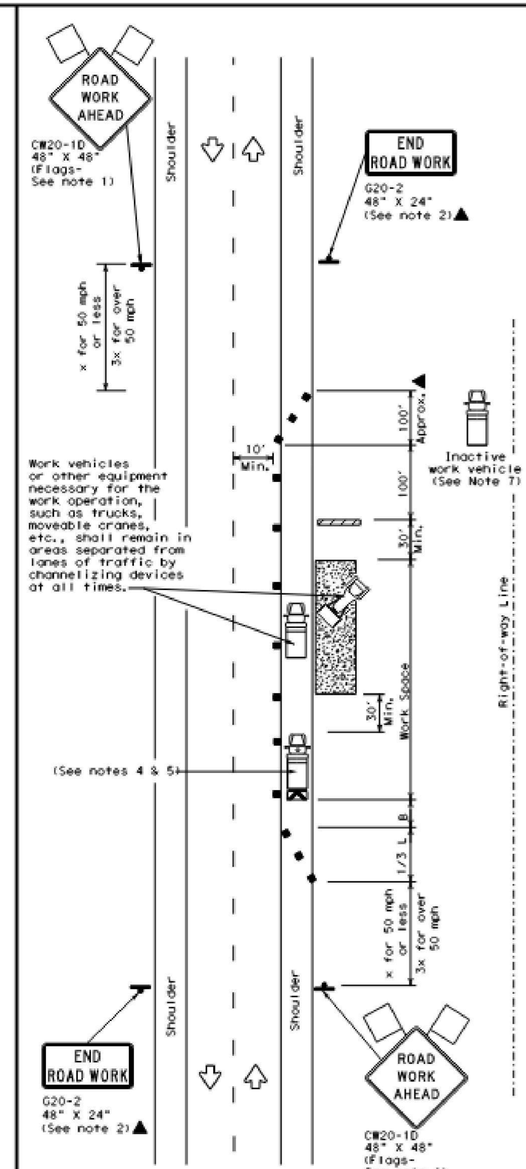

TCP (2-1c)

WORK VEHICLES ON SHOULDER

Conventional Roads

LEGEND			
	Type 3 Barricade		Channelizing Devices
	Heavy Work Vehicle		Truck Mounted Attenuator (TMA)
	Trailer Mounted Flashing Arrow Board		Portable Changeable Message Sign (PCMS)
	Sign		Traffic Flow
	Flag		Flagger

Posted Speed *	Formula	Minimum Desirable Taper Lengths **			Suggested Maximum Spacing of Channelizing Devices		Minimum Sign Spacing "X" Distance	Suggested Longitudinal Buffer Space "B"
		10' Offset	11' Offset	12' Offset	On a Taper	On a Tangent		
30	$L = \frac{WS^2}{60}$	150'	165'	180'	30'	60'	120'	90'
35		205'	225'	245'	35'	70'	160'	120'
40		265'	295'	320'	40'	80'	240'	155'
45	L = WS	450'	495'	540'	45'	90'	320'	195'
50		500'	550'	600'	50'	100'	400'	240'
55		550'	605'	660'	55'	110'	500'	295'
60		600'	660'	720'	60'	120'	600'	350'
65		650'	715'	780'	65'	130'	700'	410'
70		700'	770'	840'	70'	140'	800'	475'
75		750'	825'	900'	75'	150'	900'	540'

* Conventional Roads Only

** Taper lengths have been rounded off.
L=Length of Taper(FT) W=Width of Offset(FT) S=Posted Speed(MPH)

TYPICAL USAGE				
MOBILE	SHORT DURATION	SHORT TERM STATIONARY	INTERMEDIATE TERM STATIONARY	LONG TERM STATIONARY
	✓	✓	✓	✓

GENERAL NOTES

1. Flags attached to signs where shown, are REQUIRED.
2. All traffic control devices illustrated are REQUIRED, except those denoted with the triangle symbol may be omitted when stated in the plans, or for routine maintenance work, when approved by the Engineer.
3. Stockpiled material should be placed a minimum of 30 feet from nearest traveled way.
4. Shadow Vehicle with TMA and high intensity rotating, flashing, oscillating or strobe lights. A Shadow Vehicle with a TMA should be used anytime it can be positioned 30 to 100 feet in advance of the area of crew exposure without adversely affecting the performance or quality of the work. If workers are no longer present but road or work conditions require the traffic control to remain in place, Type 3 Barricades or other channelizing devices may be substituted for the Shadow Vehicle and TMA.
5. Additional Shadow Vehicles with TMAs may be positioned off the paved surface, next to those shown in order to protect a wider work space.
6. See TCP(5-1) for shoulder work on divided highways, expressways and freeways.
7. Inactive work vehicles or other equipment should be parked near the right-of-way line and not parked on the paved shoulder.
8. CW21-5 "SHOULDER WORK" signs may be used in place of CW21-1D "ROAD WORK AHEAD" signs for shoulder work on conventional roadways.

Texas Department of Transportation — Traffic Operations Division Standard

TRAFFIC CONTROL PLAN CONVENTIONAL ROAD SHOULDER WORK

TCP(2-1)-18

FILE: tcp2-1-18.dgn	DN:	CK:	DW:	CK:
©TxDOT December 1985	CONT	SECT	JOB	HIGHWAY
REVISIONS 2-94 4-98 8-95 2-12 1-97 2-18	DIST		COUNTY	SHEET NO.

161

GERALD S. FURRIER — STATE OF TEXAS — LICENSED PROFESSIONAL ENGINEER 129811 — 12/11/2023

REV. NO.	DATE	DRWN	CHKD	REMARKS
A	8/3/22	DWS	ALH	CONFORMED DRAWINGS

DESIGNED BY: A. KAJALE
DRAWN BY: S. DHANGAR
SHEET CHK'D BY: M. MAHADEVAN
CROSS CHK'D BY: A. RHAMES
APPROVED BY: A. HINDS
DATE: DECEMBER 2023

CDM Smith
8310-1 N Capital of Texas Hwy, Suite 250
Austin, TX 78731
Tel: (512) 346-1100
TBPELS Firm Registration No. F-3043

CITY OF GEORGETOWN, TEXAS

CEDAR BREAKS AND D B WOOD LIFT STATIONS

TRAFFIC CONTROL DETAIL II

PROJECT NO. 2048-272644
FILE NAME: C012 STDT.DWG
SHEET NO.
CD-12

PROPERTY OF CDM SMITH AND ARE NOT TO BE USED, IN WHOLE OR PART, FOR ANY OTHER PROJECT WITHOUT THE WRITTEN AUTHORIZATION OF CDM SMITH.
REUSE OF DOCUMENTS: THESE DOCUMENTS AND DESIGNS PROVIDED BY PROFESSIONAL SERVICE, INCORPORATED HEREIN, ARE THE PROPERTY OF CDM SMITH.
©2023 CDM SMITH. ALL RIGHTS RESERVED.

XREFs: [CDMS_2234] Images: []
Last saved by: RHAMESAD Time: 1/6/2019 12:53:46 PM
C:\cdmext\rhamesad\d0297581\C20SSTDT.dwg
Plotted: 12/13/2023 7:04:11 PM

GENERAL NOTES

DESIGN CRITERIA:

CODES:

- INTERNATIONAL BUILDING CODE 2021
- ENVIRONMENTAL STRUCTURES: ACI 350–06 "CODE REQUIREMENTS FOR ENVIRONMENTAL ENGINEERING CONCRETE STRUCTURES"
- OTHER STRUCTURES: ACI 318–19 "BUILDING CODE REQUIREMENTS FOR STRUCTURAL CONCRETE"
- AISC MANUAL OF STEEL CONSTRUCTION, FIFTEENTH EDITION
- ALUMINUM DESIGN MANUAL 2020

DESIGN LOADS:

LIVE LOADS:

– STAIRWAYS AND ACCESS PLATFORMS	100 PSF
– ELEVATED SLABS	200 PSF
– PROCESS SLABS ON GRADE	200 PSF

SNOW LOAD:

– GROUND SNOW LOAD, PG	5 PSF

WIND LOADS:

– BASIC DESIGN WIND SPEED, V (3–SECOND GUST)	115 MPH
– ALLOWABLE STRESS DESIGN WIND SPEED, V_{asd}	90 MPH
– RISK CATEGORY	III
– EXPOSURE CATEGORY	C
– INTERNAL PRESSURE COEFFICIENT (E–HOUSE)	±0.55
– COMPONENT AND CLADDING PRESSURES	SEE DESIGN DRAWINGS

EARTHQUAKE:

– SEISMIC DESIGN CATEGORY	A
– SEISMIC IMPORTANCE FACTOR, I	1.25
– MAPPED SPECTRAL RESPONSE ACC, SS	0.055
– MAPPED SPECTRAL RESPONSE ACC, S1	0.035
– SPECTRAL RESPONSE COEFFICIENT, SDS	0.033
– SPECTRAL RESPONSE COEFFICIENT, SD1	0.019
– SITE CLASS	B
– BASIC SEISMIC FORCE–RESISTING SYSTEM	SEE DESIGN DRAWINGS
– DESIGN BASE SHEAR	SEE DESIGN DRAWINGS
– SEISMIC RESPONSE COEFFICIENT, CS	SEE DESIGN DRAWINGS
– RESPONSE MODIFICATION FACTOR, R	SEE DESIGN DRAWINGS
– ANALYSIS PROCEDURE USED	SEE DESIGN DRAWINGS

CONCRETE 28–DAY STRENGTH:

– CONCRETE FILL, ENCASEMENTS, AND BOLLARDS	2500 PSI
– CIVIL SITE CONCRETE (SEE 'C' DRAWINGS)	3000 PSI
– BEAMS, SLABS, WALLS, FOUNDATIONS	4500 PSI

FOUNDATIONS:

- ALLOWABLE BEARING PRESSURE FOR MAT FOUNDATIONS ON SELECT/STRUCTURAL FILL AND GEOMODEL LAYER 2 LIMESTONE SHALL HAVE 3500 PSF AND 6000 PSF RESPECTIVELY AND GRADE SLABS ON SELECT/STRUCTURAL FILL SHALL HAVE 2500 PSF

GENERAL CONDITIONS:

ALL STRUCTURAL DRAWINGS SHALL BE USED IN CONJUNCTION WITH THE MECHANICAL, CIVIL, ELECTRICAL AND SHOP DRAWINGS AND SPECIFICATIONS.

THE CONTRACTOR SHALL REVIEW AND VERIFY DIMENSIONS SHOWN IN ALL PLANS AND REVIEW ALL FIELD CONDITIONS THAT MAY AFFECT THE INSTALLATION OF THE FACILITY. SHOULD DISCREPANCIES APPEAR, THE CONTRACTOR SHALL NOTIFY THE ENGINEER IN WRITING TO OBTAIN ENGINEER'S CLARIFICATION BEFORE COMMENCING WITH THE WORK.

FOR ALL ITEMS EMBEDDED IN OR PASSED THROUGH CONCRETE, THE CONTRACTOR SHALL INITIALLY REFER TO MECHANICAL DRAWINGS FOR TYPE, SIZE, LOCATION AND SPECIAL INSTALLATION REQUIREMENTS FOR THESE ITEMS.

THE CONTRACTOR SHALL TAKE ANY AND ALL NECESSARY MEASURES TO PROTECT EXISTING STRUCTURES FROM DAMAGE WHEN WORKING IN AND AROUND EXISTING STRUCTURES PERFORMING WORK SUCH AS DEMOLITION, FOUNDATION EXCAVATION AND OTHERS.

SIZE AND LOCATION OF EQUIPMENT PADS AND ANCHOR BOLTS SHALL BE PER EQUIPMENT MANUFACTURER'S REQUIREMENTS.

ANY EQUIPMENT THAT MAY INDUCE VIBRATION TO THE STRUCTURE SHALL BE ADEQUATELY ISOLATED FROM THE STRUCTURES.

ALL DETAILS AND SECTIONS SHOWN ON THE DRAWINGS ARE INTENDED TO BE TYPICAL AND SHALL BE CONSTRUED TO APPLY TO ANY SIMILAR SITUATION ELSE–WHERE ON THE PROJECT, EXCEPT WHERE A DIFFERENT DETAIL IS SHOWN.

STANDARD DETAILS APPLY TO ALL SIMILAR SITUATIONS ON THE PROJECT, EXCEPT WHERE A DIFFERENT DETAIL IS SHOWN.

UNLESS OTHERWISE NOTED, ALL PIPES UNDER SOIL SUPPORTED STRUCTURAL SLABS AND FOOTINGS SHALL BE ENCASED IN REINFORCED CONCRETE AS SHOWN ON THE STRUCTURAL DRAWINGS. PIPES SHALL BE PRESSURE TESTED BEFORE ENCASING. NOT ALL PIPING SHOWN ON STRUCTURAL DRAWINGS. REFER TO CIVIL AND PROCESS MECHANICAL DRAWINGS FOR PIPING SIZE AND LOCATIONS.

CONCRETE:

ALL MATERIALS AND METHODS OF CONSTRUCTION SHALL BE IN ACCORDANCE WITH ACI 318 AND ACI 350 REQUIREMENTS.

ALL CONCRETE SHALL BE AIR–ENTRAINED IN ACCORDANCE WITH ASTM C260.

WATER REDUCING AGENT SHALL BE IN ACCORDANCE WITH ASTM C494.

ALL CONCRETE SURFACES EXPOSED TO AIR, UNLESS OTHERWISE NOTED IN SPECIFICATIONS, SHALL BE TREATED WITH AN APPROPRIATE CURING COMPOUND AS SOON AS CEMENT FINISHING IS COMPLETED OR FORMS ARE REMOVED.

ALL EXPOSED CORNERS OF CONCRETE SHALL HAVE A MINIMUM CHAMFER OF ¾" UNLESS OTHERWISE NOTED.

THE CONTRACTOR SHALL OBTAIN ENGINEER'S APPROVAL FOR THE LOCATION OF CONSTRUCTION JOINTS THAT ARE NOT SHOWN ON THE DRAWING.

REINFORCING STEEL:

REINFORCEMENT SHALL CONFORM TO ASTM A615, GRADE 60 REQUIREMENTS. WELDED WIRE FABRIC SHALL CONFORM TO ASTM A185.

ALL ACCESSORIES SHALL BE IN CONFORMANCE WITH ACI 315 REQUIREMENTS. REINFORCING STEEL SHALL HAVE THE FOLLOWING CLEAR COVER UNLESS OTHER–WISE NOTED:

– CONCRETE CAST AGAINST EARTH	3"
– FORMED SURFACES IN CONTACT WITH SOIL, SEWAGE, WATER OR EXPOSED TO WEATHER	2"

LAP SPLICES SHALL BE AS SHOWN ON THE DRAWINGS. FOR LAP SPLICES NOT SHOWN ON THE DRAWINGS, THE CONTRACTOR SHALL OBTAIN ENGINEER'S APPROVAL.

THE CONTRACTOR SHALL PREPARE PLACING DRAWINGS AND SCHEDULES IN CONFORMANCE WITH ACI 315 REQUIREMENTS.

FLOATATION CONSIDERATION:

STRUCTURES WERE DESIGNED TO BE NON–BUOYANT AFTER THE STRUCTURE IS PLACED INTO SERVICE. THEREFORE, THE STRUCTURE MAY BE BUOYANT DURING CONSTRUCTION. THE GENERAL CONTRACTOR SHALL PROTECT ALL STRUCTURES (NEW AND EXISTING) FROM FLOATATION DURING CONSTRUCTION, REGARDLESS OF GROUNDWATER LEVELS, UNTIL STRUCTURES ARE PLACED IN OPERATION.

MISCELLANEOUS STEEL:

DESIGN, FABRICATION, ERECTION MATERIALS AND WORKMANSHIP SHALL BE IN ACCORDANCE WITH THE LATEST AISC SPECIFICATIONS AND DESIGN DRAWINGS.

ALL MISCELLANEOUS STEEL:

W SHAPES AND CHANNELS	ASTM A992
M, S AND HP SHAPES	ASTM A36
ANGLES	ASTM A36
HSS (SQUARE, RECTANGULAR AND ROUND)	ASTM A500
PLATES	ASTM A36
HIGH–STRENGTH BOLTS	ASTM F3125
NUTS	ASTM F3125
HARDENED STEEL WASHER	ASTM F3125
ANCHOR RODS	ASTM F1554
THREADED ROD	ASTM A36

ALL PIPE: ASTM A53, GRADE B.

THE FABRICATOR SHALL DESIGN AND DETAIL ALL PARTS OF CONNECTIONS NOT FULLY DETAILED ON THE DESIGN DRAWINGS. THE NUMBER OF BOLTS AND OTHER SIMILAR ELEMENTS SHOWN ON THE DRAWING ARE PICTORIAL ONLY.

SHOP AND ERECTION DRAWINGS SHALL BE SUBMITTED TO THE ENGINEER FOR REVIEW.

WELDED CONNECTIONS SHALL BE IN ACCORDANCE WITH THE LATEST AWS STRUCTURAL WELDING CODE REQUIREMENTS. ELECTRODES SHALL BE E–70XX.

MISCELLANEOUS ALUMINUM:

DESIGN, FABRICATION, ERECTION MATERIALS AND WORKMANSHIP SHALL BE IN ACCORDANCE WITH THE LATEST "ALUMINUM DESIGN MANUAL" (ADM) SPECIFICATIONS AND DESIGN DRAWINGS.

ALL MISCELLANEOUS ALUMINUM:

ALUMINUM EXTRUDED PIPE –	ASTM B429, ALLOY 6063–T6 OR 6061–T6
ALUMINUM EXTRUDED SHAPE –	ASTM B221, ALLOY 6063–T6
ALUMINUM SHEET AND PLATE –	ASTM B209, ALLOY 6061–T6
ALUMINUM ALLOY ROLLED THREAD PLATE –	ASTM B209, ALLOY 6061–T6
ALUMINUM CASTING –	ASTM B26/B26M, ALLOY A350.6–T6

SHOP AND ERECTION DRAWINGS SHALL BE SUBMITTED TO THE ENGINEER FOR REVIEW.

WELDED CONNECTIONS SHALL BE IN ACCORDANCE WITH THE LATEST ANS D1.2/D1.2M "STRUCTURAL WELDING CODE – ALUMINUM".

WHERE ALUMINUM CONTACTS A DISSIMILAR METAL, APPLY TO THE DISSIMILAR METAL A HEAVY BRUSH COAT OF ZINC–CHROMATE PRIMER FOLLOWED BY TWO COATS OF ALUMINUM METAL PAINT.

WHERE ALUMINUM CONTACTS MASONRY OR CONCRETE, APPLY A HEAVY COAT OF BITUMASTIC OR EPOXY PAINT.

FOUNDATION NOTES:

1. THE EXISTING SUBSURFACE MATERIALS GENERALLY CONSIST OF THE FOLLOWING LAYERS:
   A. GEOMODEL LAYER 1: SURFICIAL CLAYS, SANDS, AND GRAVELS.
   B. GEOMODEL LAYER 2: EDWARDS GROUP LIMESTONE.
2. REFER TO DESIGN DRAWINGS FOR VERTICAL AND HORIZONTAL LIMITS OF COMPACTED SELECT STRUCTURAL FILL BENEATH SLAB ON GRADE FOUNDATIONS.
3. CONSTRUCTION AREAS SHALL BE STRIPPED OF ALL VEGETATION INCLUDING ROOTS, LOOSE/SOFT TOPSOIL, AND OTHER UNSUITABLE SURFACE MATERIALS, FAT CLAYS. FOLLOWING STRIPPING AND PRIOR TO PLACEMENT OF ADDITIONAL FILL, THE EXPOSED SOIL SUBGRADE AREAS SHALL BE PROOFROLLED AS PER TXDOT ITEM 216 WITH AN ADEQUATELY LOADED VEHICLE SUCH AS A FULLY–LOADED TANDEM–AXLE DUMP TRUCK TO DETECT WEAK AREAS. WEAK AREAS DETECTED DURING PROOFROLLING SHALL BE REMOVED AND REPLACED WITH SELECT FILL. PROOFROLLING IS NOT NECESSARY IN INTACT GEOMODEL LAYER 2 LIMESTONE SUBGRADE AREAS. PROPER SITE DRAINAGE SHALL BE MAINTAINED DURING CONSTRUCTION SO THAT PONDING OF SURFACE RUNOFF DOES NOT OCCUR.
4. SUBSEQUENT TO PROOFROLLING, AND JUST PRIOR TO PLACEMENT OF FILL, THE EXPOSED SUBGRADE SHALL BE EVALUATED FOR MOISTURE AND DENSITY. THE SUBGRADE SHALL BE WITHIN 2 PERCENT OF THE OPTIMUM MOISTURE CONTENT, AND HAVE AN IN–PLACE DRY DENSITY OF AT LEAST 98 PERCENT OF THE STANDARD EFFORT (ASTM D 698) MAXIMUM DRY DENSITY OF THE IN–SITU SOILS. IF THE MOISTURE OR DENSITY DOES NOT MEET THE ABOVE CRITERIA, THE SUBGRADE SHALL BE SCARIFIED TO A MINIMUM DEPTH OF 8 INCHES, MOISTURE ADJUSTED TO WITHIN 2 PERCENT OF THE OPTIMUM MOISTURE CONTENT, AND COMPACTED TO AT LEAST 98 PERCENT OF THE STANDARD EFFORT (ASTM D698) MAXIMUM DRY DENSITY.
5. GRADE ADJUSTMENTS WITHIN THE GRADE SLABS OR FOUNDATION AREA SHALL BE ACCOMPLISHED BY INSTALLING AND COMPACTING SELECT FILL COMPOSED OF IMPORTED FILL MATERIAL OR ON–SITE PROCESSED ROCK MATERIAL SPECIFIED IN THE GEOTECHNICAL REPORT THAT MEETS TXDOT ITEM 247 (TYPE A, GRADE 3 OR BETTER) WITH A PLASTICITY INDEX RANGING BETWEEN 5 AND 20 PERCENT AND GRADATION LESS THAN 40% RETAINED ON NO. 4 SIEVE. SELECT FILL SHALL BE PLACED ON PREPARED SURFACES IN LIFTS NOT TO EXCEED 8 INCHES LOOSE MEASURE, WITH COMPACTED THICKNESS NOT TO EXCEED 6 INCHES. THE SELECT FILL SHALL BE COMPACTED TO AT LEAST 98 PERCENT OF THE STANDARD EFFORT (ASTM D 698) MAXIMUM DRY DENSITY WITHIN 3 PERCENT OF THE OPTIMUM MOISTURE CONTENT FOR FILL LAYERS UP TO 6 FEET BELOW FINAL GRADE. INCREASE COMPACTION TO AT LEAST 100 PERCENT OF THE STANDARD EFFORT (ASTM D 698) MAXIMUM DRY DENSITY FOR FILL LAYERS DEEPER THAN 6 FEET BELOW FINAL GRADE.
6. SELECT FILL MATERIAL CAN ALSO CONSIST OF CRUSHED GEOMODEL LAYER 2 LIMESTONE BASE MATERIAL MEETING THE REQUIREMENTS OF THE TEXAS DEPARTMENT OF TRANSPORTATION (TXDOT) 2004 STANDARD SPECIFICATION ITEM 247, TYPE A, GRADE 3. GEOMODEL LAYER 1 SOILS ARE NOT SUITABLE FOR RE–USE AS SELECT/STRUCTURAL FILL.
7. FOR MAT FOUNDATIONS FOR BELOW–GRADE STRUCTURES (LIFT STATION, STRUCTURES, ETC.); EXCAVATIONS SHALL BE PERFORMED WITH EQUIPMENT CAPABLE OF PROVIDING A RELATIVELY CLEAN BEARING AREA. THE BOTTOM 6 INCHES OF THE EXCAVATIONS SHALL BE PERFORMED USING A SMOOTH–TOOTHED EXCAVATION BUCKET OR HAND LABOR. THE EXCAVATIONS SHALL BE NEATLY EXCAVATED AND PROPERLY FORMED WITH DISTURBANCE OF THE BEARING AREA OF THE FOUNDATIONS MINIMIZED DURING THE EXCAVATION OPERATIONS.
   A. EITHER AT OR WITHIN 6 INCHES OF THE BOTTOM OF EXCAVATIONS, THE EXPOSED SOIL SUBGRADE AREA SHALL BE PROOFROLLED AS PER TXDOT ITEM 216 WITH AN ADEQUATELY LOADED VEHICLE SUCH AS A FULLY–LOADED TANDEM–AXLE DUMP TRUCK TO DETECT WEAK AREAS. PROOFROLLING IS NOT NECESSARY IN INTACT LIMESTONE STRATUM SUBGRADE AREAS.
   B. WEAK AREAS OR SOFT ZONES OBSERVED DURING PROOFROLLING SHALL BE OVER–EXCAVATED TO A FIRM AND UNDISTURBED SOIL LAYER WITH ALL LOOSE MATERIALS IN THE EXCAVATION BOTTOM REMOVED AND REPLACED WITH SELECT FILL OR CONCRETE.
   C. CONTRACTOR SHALL INSTALL SEAL SLABS AND PROVIDE NECESSARY DEWATERING TO ENSURE THAT WATER IS REMOVED AND DOES NOT ACCUMULATE AT THE BOTTOM OF THE FOUNDATION EXCAVATIONS.
8. SAMPLES OF PROPOSED SELECT FILL SHALL BE FURNISHED TO THE TESTING LABORATORY 7 DAYS PRIOR TO INSTALLATION TO PERMIT TIME FOR SPECIFICATION COMPLIANCE INSPECTION AND APPROVAL.
9. FOUNDATION DESIGNS ARE BASED ON THE RECOMMENDATIONS PROVIDED IN THE GEOTECHNICAL REPORT.

GEOTECHNICAL REPORT:

GEOTECHNICAL REPORT ENTITLED "CITY OF GEORGETOWN – SOUTH LAKE WTP TO SOUTH FORK INTERCEPTOR WASTEWATER IMPROVEMENTS" PREPARED BY TERRACON CONSULTANTS, INC., DATED NOVEMBER 06, 2023.

DEFERRED SUBMITTALS

THE FOLLOWING PORTIONS OF THE PROJECT ARE DEFERRED SUBMITTAL ITEMS & HAVE NOT BEEN DESIGNED BY THE ENGINEER OF RECORD:

- ANCHORAGE OF EQUIPMENT AND PIPE SUPPORTS (SPECIFICATION DIV 40).
- ELECTRICAL EQUIPMENT AND GENERATOR ENCLOSURES.
- GENERATOR ACCESS PLATFORM, RAILING, AND STAIRS.
- ALUMINUM FLOOR DOORS (SPECIFICATION SECTION 083483).
- SCADA TOWER AND FOUNDATION (SPECIFICATION SECTION 406666).
- ELECTRICAL POWER HOUSE (E–HOUSE) (SPECIFICATION SECTION 266100).

DEFERRED SUBMITTAL ITEMS SHALL NOT BE INSTALLED UNTIL THE ENGINEER OF RECORD HAS REVIEWED THE SUBMITTAL DOCUMENTS AND INDICATED THAT THEY HAVE BEEN REVIEWED AND ARE FOUND TO BE IN CONFORMANCE WITH THE REQUIREMENTS OF THE SPECIFICATIONS.

DEFERRED SUBMITTALS SHALL BE PREPARED AND STAMPED BY A CIVIL OR STRUCTURAL PROFESSIONAL ENGINEER LICENSED IN THE STATE OF TEXAS.

ABBREVIATIONS:

AL	ALUMINUM	MAX	MAXIMUM
ADDT'L	ADDITIONAL	MIN	MINIMUM
BLDG	BUILDING	MISC	MISCELLANEOUS
BOT	BOTTOM	NF	NEAR FACE
CC	CENTER TO CENTER	NTS	NOT TO SCALE
CJ	CONTROL JOINT	OC	ON CENTER
CLR	CLEAR COVER	PCJ	PARTIAL CONTRACTION JOINT
CMU	CONCRETE MASONRY UNIT	PJF	PREFORMED JOINT FILLER
CONC	CONCRETE	PL	PLATE
CONST JT	CONSTRUCTION JOINT	PLF	POUNDS PER LINEAR FOOT
CONT	CONTINUOUS	PROJ	PROJECTION
CONT'D	CONTINUED	PSF	POUNDS PER SQUARE FOOT
DIA	DIAMETER	PSI	POUNDS PER SQUARE INCH
DWG	DRAWING	REINF	REINFORCEMENT
EF	EACH FACE	SPECS	SPECIFICATIONS
EL	ELEVATION	SS	STAINLESS STEEL
EW	EACH WAY	STD	STANDARD
EXP JT	EXPANSION JOINT	T&B	TOP AND BOTTOM
FF	FAR FACE	T/STRUCTURE	TOP OF STRUCTURE
FTG	FOOTING	TYP	TYPICAL
HORIZ	HORIZONTAL	UON	UNLESS OTHERWISE NOTED
HP	HIGH POINT	VERT	VERTICAL
ID	INSIDE DIAMETER	WSTP	WATERSTOP
LP	LOW POINT	WWF	WELDED WIRE FABRIC
MAT'L	MATERIAL	W/	WITH

ABBREVIATION NOTES:

1. ABBREVIATIONS AND DESIGNATIONS FOR STEEL MEMBERS MAY BE FOUND IN THE CURRENT MANUAL OF STEEL CONSTRUCTION BY AISC.
2. ABBREVIATIONS OF TECHNICAL SOCIETIES AND TRADE ASSOCIATIONS MAY BE FOUND IN THE SPECIFICATIONS.
3. WELDING SYMBOLS AND ABBREVIATIONS MAY BE FOUND IN AWS 2.4.

STRUCTURAL LEGEND & SYMBOLS

(E) — INDICATES EQUIPMENT PAD PER DETAIL B ON SHEET SD–2. COORDINATE SIZE W/ EQUIPMENT REQUIREMENTS.

DECK & GRATING SPAN DIRECTION

WATERSTOP (SEE SPECS FOR TYPE AND MATERIALS)

MOMENT CONNECTION

PIPE — PXXX / EL XXX.XX / QTY XX — MARK. SEE A/S–STD–8 / TOP OF SHAFT ELEVATION / QUANTITY OF SHAFTS

EARTH FILL	BRICK
UNDISTURBED SOIL	STEEL
STRUCTURAL FILL	GRATING
SELECT FILL	CHECKERED PLATE
SAND	CONCRETE MASONRY
GROUT	CONCRETE
NATIVE LIME STONE	AL FLOOR DOOR

COLUMN CENTERLINE UNO

GUARDRAIL/RAILING

STATE OF TEXAS — MAHNAZ MOSTAFAZADEH — 147841 — LICENSED PROFESSIONAL ENGINEER

12/11/2023

REV. NO.	DATE	DRWN	CHKD	REMARKS

DESIGNED BY: E. RIVERA
DRAWN BY: J. GILEZAN
SHEET CHK'D BY: W. KIAHON
CROSS CHK'D BY: E. RIVERA
APPROVED BY: M. MOSTAFAZADEH
DATE: DECEMBER 2023

CDM Smith
8310-1 N Capital of Texas Hwy, Suite 250
Austin, TX 78731
Tel: (512) 346-1100
TBPELS Firm Registration No. F-3043

CITY OF GEORGETOWN, TEXAS

CEDAR BREAKS AND D B WOOD LIFT STATIONS

STRUCTURAL
GENERAL NOTES, ABBREVATIONS, AND LEGEND

PROJECT NO. 2048–272644
FILE NAME: S001NFNT.dwg
SHEET NO.
S-1

Plotted: 12/12/2023 10:45:24 AM

© 2023 CDM SMITH ALL RIGHTS RESERVED.
REUSE OF DOCUMENTS: THESE DOCUMENTS AND DESIGNS PROVIDED BY PROFESSIONAL SERVICE, INCORPORATED HEREIN, ARE THE PROPERTY OF CDM SMITH AND ARE NOT TO BE USED, IN WHOLE OR PART, FOR ANY OTHER PROJECT WITHOUT THE WRITTEN AUTHORIZATION OF CDM SMITH.

NOTES:

1. THIS DRAWING IS PROVIDED TO OUTLINE THE MINIMUM LEVEL OF SPECIAL INSPECTIONS DURING CONSTRUCTION TO ENSURE CONFORMANCE TO THE REQUIREMENTS OF THE CONTRACT DOCUMENTS. A STATEMENT OF SPECIAL INSPECTIONS WILL BE PREPARED BY A REGISTERED DESIGN PROFESSIONAL AND SUBMITTED WITH THE BUILDING PERMIT APPLICATION.
2. SPECIAL INSPECTIONS WILL BE CONDUCTED IN ACCORDANCE WITH THE REQUIREMENTS SET FORTH IN CHAPTER 17 OF THE 2021 INTERNATIONAL BUILDING CODE (IBC).
3. IN ACCORDANCE WITH THE REQUIREMENTS OF CHAPTER 17 OF THE INTERNATIONAL BUILDING CODE, THE OWNER WILL PROVIDE AN APPROVED AGENCY OR AGENCIES, INDEPENDENT FROM THE CONTRACTOR AND EMPLOYING QUALIFIED PERSONNEL TO PERFORM SPECIAL INSPECTIONS IDENTIFIED IN THE STATEMENT OF SPECIAL INSPECTIONS. THE APPROVED AGENCY WILL FURNISH INSPECTION REPORTS TO THE REGISTERED DESIGN PROFESSIONAL IN RESPONSIBLE CHARGE AND BUILDING OFFICIAL.
4. SPECIAL INSPECTIONS SHALL NOT RELIEVE THE CONTRACTOR OF RESPONSIBILITY FOR QUALITY CONTROL OF THE WORK OR FOR CONFORMANCE TO THE REQUIREMENTS OF THE CONTRACT DOCUMENTS. DETECTION, OR FAILURE TO DETECT, DEFECTS IN THE WORK SHALL NOT RELIEVE THE CONTRACTOR OF RESPONSIBILITY TO CORRECT ALL DEFECTS IN THE WORK, WHETHER DETECTED OR NOT, AND OF RESPONSIBILITY FOR CONFORMANCE TO THE REQUIREMENTS OF THE CONTRACT DOCUMENTS.
5. REMOVE AND REPLACE, OR REPAIR, DEFECTS IN THE WORK AND WORK NOT IN CONFORMANCE WITH THE REQUIREMENTS OF THE CONTRACT DOCUMENTS AT NO ADDITIONAL COST TO THE OWNER. CONTRACTOR SHALL BEAR THE COSTS FOR THE INSPECTION AND/OR TESTS OF ANY REPLACED OR REPAIRED PORTIONS OF THE WORK.
6. CONTRACTOR SHALL COOPERATE WITH SPECIAL INSPECTIONS BY PROVIDING SUFFICIENT NOTICE FOR THE SCHEDULING OF PERSONNEL AND BY ALLOWING FREE AND SAFE ACCESS TO THE WORK FOR OBSERVATION, VERIFICATION, SAMPLING AND INSPECTION. PROVIDE AND PERMIT THE USE OF LADDERS, SCAFFOLDING, INCIDENTAL EQUIPMENT, AND SAFETY EQUIPMENT AS MAY BE REQUIRED TO CONDUCT SPECIAL INSPECTIONS. ALL SUCH PROVISIONS FOR FREE AND SAFE ACCESS AND EQUIPMENT SHALL BE SAFE, IN GOOD WORKING CONDITION, AND ERECTED, MAINTAINED, AND HANDLED BY QUALIFIED PERSONNEL.
7. SPECIAL INSPECTIONS DO NOT APPLY TO CONTRACTOR'S EQUIPMENT, TEMPORARY STRUCTURES USED FOR CONSTRUCTION, MEANS AND METHODS OF CONSTRUCTION, OR SITE SAFETY. CONTRACTOR SHALL REMAIN RESPONSIBLE FOR ADEQUACY AND SAFETY OF EQUIPMENT, TEMPORARY STRUCTURES USED FOR CONSTRUCTION, MEANS AND METHODS OF CONSTRUCTION AND SITE SAFETY.
8. PROVIDE SPECIAL INSPECTIONS AND TESTS FOR THE FOLLOWING TYPES OF WORK:
   A. STEEL CONSTRUCTION PER IBC SECTION 1705.2.
   B. CONCRETE CONSTRUCTION PER IBC SECTION 1705.3 AND TABLE 1705.3.
   C. SOILS PER IBC SECTION 1705.6.
   D. FABRICATED ITEMS PER IBC SECTION 1705.11.

TABLE 1 – REQUIRED SPECIAL INSPECTIONS AND TESTS OF SOILS (IBC, TABLE 1705.6)

TYPE	IBC REFERENCE	INSPECTION FREQUENCY		REFERENCE STANDARD
		CONTINUOUS	PERIODIC	
VERIFY MATERIALS BELOW SHALLOW FOUNDATIONS ARE ADEQUATE TO ACHIEVE THE DESIGN BEARING CAPACITY.	1705.6		X	CONTRACT DOCUMENTS AND GEOTECHNICAL REPORT
VERIFY EXCAVATIONS ARE EXTENDED TO PROPER DEPTH AND HAVE REACHED PROPER MATERIAL.			X	
PERFORM CLASSIFICATION AND TESTING OF COMPACTED FILL MATERIALS.			X	
DURING FILL PLACEMENT, VERIFY USE OF PROPER MATERIALS AND PROCEDURES IN ACCORDANCE WITH THE PROVISIONS OF THE APPROVED GEOTECHNICAL REPORT. VERIFY DENSITIES AND LIFT THICKNESSES DURING PLACEMENT AND COMPACTION OF COMPACTED FILL.		X		
PRIOR TO PLACEMENT OF COMPACTED FILL, INSPECT SUBGRADE AND VERIFY THAT SITE HAS BEEN PREPARED PROPERLY.			X	

TABLE 2 – REQUIRED SPECIAL INSPECTIONS AND TESTS OF CONCRETE CONSTRUCTION (IBC, TABLE 1705.3)

TYPE	IBC REFERENCE	INSPECTION FREQUENCY		REFERENCE STANDARD
		CONTINUOUS	PERIODIC	
INSPECT REINFORCEMENT, INCLUDING PRESTRESSING TENDONS, AND VERIFY PLACEMENT	1705.3		X	ACI 318: CH 20, 25.2, 25.3, 26.6.1–26.6.3
REINFORCING BAR WELDING:	1705.3			AWS D1.4 ACI 318: 26.6.4
a. VERIFY WELDABILITY OF REINFORCING BARS OTHER THAN ASTM A706			X	
b. INSPECT SINGLE PASS FILLET WELDS MAX 5/16"			X	
c. INSPECT ALL OTHER WELDS		X		
INSPECT ANCHORS CAST IN CONCRETE	1705.3		X	ACI 318: 17.8.2
INSPECT ANCHORS POST–INSTALLED IN HARDENED CONCRETE MEMBERS (NOTE a):	1705.3			
a. ADHESIVE ANCHORS INSTALLED HORIZONTALLY OR UPWARDLY INCLINED ORIENTATIONS TO RESIST SUSTAINED TENSION LOADS		X		ACI 318: 17.8.2.4
b. MECHANICAL ANCHORS AND ADHESIVE ANCHORS NOT DEFINED IN a			X	ACI 318: 17.8.2
VERIFYING USE OF REQUIRED DESIGN MIX	1904.1 1904.2		X	ACI 318: CH 19, 26.4.3, 26.4.4
PRIOR TO CONCRETE PLACEMENT, FABRICATE SPECIMENS FOR STRENGTH TESTS, PERFORM SLUMP AND AIR CONTENT TESTS, AND DETERMINE THE TEMPERATURE OF THE CONCRETE	1705.3	X		ASTM C31 ASTM C172 ACI 318: 26.5, 26.12
INSPECT CONCRETE AND SHORTCRETE PLACEMENT FOR PROPER APPLICATION TECHNIQUES	1705.3	X		ACI 318: 26.5
VERIFY MAINTENANCE OF SPECIFIED CURING TEMPERATURE AND TECHNIQUES	1705.3		X	ACI 318: 26.5.3–26.5.5
INSPECT PRESTRESSED CONCRETE FOR:	1705.3			ACI 318: 26.10
a. APPLICATION OF PRESTRESSING FORCES		X		
b. GROUTING OF BONDED PRESTRESSING TENDONS		X		
INSPECT ERECTION OF PRECAST CONCRETE MEMBERS	1705.3		X	ACI 318: 26.9
FOR PRECAST CONCRETE DIAPHRAGM CONNECTIONS OR REINFORCEMENT AT JOINTS CLASSIFIED AS MODERATE OR HIGH DEFORMABILITY ELEMENTS (MDE OR HDE) IN STRUCTURES ASSIGNED TO SEISMIC DESIGN CATEGORY C, D, E OR F, INSPECT SUCH CONNECTIONS AND REINFORCEMENT IN THE FIELD FOR:	1705.3			ACI 318: 26.13.1.3
a. INSTALLATION OF THE EMBEDDED PARTS		X		ACI 550.5
b. COMPLETION OF THE CONTINUITY OF REINFORCEMENT ACROSS JOINTS.		X		
c. COMPLETION OF CONNECTIONS IN THE FIELD.		X		
INSPECT INSTALLATION TOLERANCES OF PRECAST CONCRETE DIAPHRAGM CONNECTIONS FOR COMPLIANCE WITH ACI 550.5	1705.3		X	ACI 318: 26.13.1.3
VERIFY IN–SITU CONCRETE STRENGTH, PRIOR TO STRESSING OF TENDONS IN POST–TENSIONED CONCRETE AND PRIOR TO REMOVAL OF SHORES AND FORMS FROM BEAMS AND STRUCTURAL SLABS	1705.3		X	ACI 318: 26.11.2
INSPECT FORMWORK FOR SHAPE, LOCATION AND DIMENSIONS OF THE CONCRETE MEMBER BEING FORMED	1705.3		X	ACI 318: 26.11.1.2(b)

NOTES:
a. SPECIFIC REQUIREMENTS FOR SPECIAL INSPECTION SHALL BE INCLUDED IN THE RESEARCH REPORT FOR THE ANCHOR ISSUED BY AN APPROVED SOURCE IN ACCORDANCE WITH 17.8.2 IN ACI 318, OR OTHER QUALIFICATION PROCEDURES. WHERE SPECIFIC REQUIREMENTS ARE NOT PROVIDED, SPECIAL INSPECTION REQUIREMENTS SHALL BE SPECIFIED BY THE REGISTERED DESIGN PROFESSIONAL AND SHALL BE APPROVED BY THE BUILDING OFFICIAL PRIOR TO THE COMMENCEMENT OF THE WORK.

STATE OF TEXAS
MAHNAZ MOSTAFAZADEH
141841
LICENSED
PROFESSIONAL ENGINEER
12/11/2023

REV. NO.	DATE	DRWN	CHKD	REMARKS

DESIGNED BY: E. RIVERA
DRAWN BY: K. RAJENDRAN
SHEET CHK'D BY: W. KIAHON
CROSS CHK'D BY: E. RIVERA
APPROVED BY: M. MOSTAFAZADEH
DATE: DECEMBER 2023

CDM Smith
8310-1 N Capital of Texas Hwy, Suite 250
Austin, TX 78731
Tel: (512) 346-1100
TBPELS Firm Registration No. F-3043

CITY OF GEORGETOWN, TEXAS

CEDAR BREAKS AND D B WOOD LIFT STATIONS

STRUCTURAL SPECIAL INSPECTIONS

PROJECT NO. 2048–272644
FILE NAME: S002NFSI.dwg
SHEET NO.
S-2

© 2023 CDM SMITH ALL RIGHTS RESERVED.
REUSE OF DOCUMENTS: THESE DOCUMENTS AND DESIGNS PROVIDED BY PROFESSIONAL SERVICE, INCORPORATED HEREIN, ARE THE PROPERTY OF CDM SMITH AND ARE NOT TO BE USED, IN WHOLE OR PART, FOR ANY OTHER PROJECT WITHOUT THE WRITTEN AUTHORIZATION OF CDM SMITH.

Plotted: 12/12/2023 10:56:22 AM

DESIGN LOAD DATA – CEDAR BREAKS STATION	
SEISMIC	
BASIC SEISMIC FORCE RESISTING SYSTEM:	CONCRETE CAST–IN–PLACE WALL DESIGNED IN ACCORDANCE WITH ACI 350.3
DESIGN BASE SHEAR:	$\left[(Pi+Pw+Pr)^2+Pc^2+Py^2\right]^{0.5}$
SEISMIC RESPONSE COEFFICIENTS	Ci=0.042 Cc=0.015 Ct=0.020
RESPONSE MODIFICATION FACTOR:	Ri=3.0 Rc=1.0
ANALYSIS PROCEDURE USED:	EQUIVALENT LATERAL FORCE PROCEDURE
REFER TO SHEET S–1 FOR DESIGN LOAD DATA THAT IS THE SAME FOR ALL STRUCTURES.	

NOTES:

1. REFER TO MECHANICAL SHEETS FOR REQUIRED EQUIPMENT PAD AND PIPE SUPPORT DIMENSIONS AND LOCATIONS.
2. REFER TO MECHANICAL SHEETS FOR ALL PIPE PENETRATION LOCATIONS, AND DETAILS.
3. PROVIDE A MINIMUM OF 3" OF SEAL SLAB UNDER THE FOUNDATION SLAB.
4. REFERENCE GEOTECHNICAL INVESTIGATION ENTITLED "CITY OF GEORGETOWN – SLWTP TO SFI WASTEWATER IMPROVEMENTS". TWO ZONES OF MATERIAL HAVE BEEN IDENTIFIED THAT MAY REQUIRE ATTENTION. THE CONTRACTOR SHALL TAKE APPROPRIATE MEASURES WHEN EXCAVATING FOR THIS STRUCTURE.
5. SEE SPECIFICATION SECTION 083483 FLOOR DOORS FOR FLOOR DOOR (ACCESS HATCH) REQUIREMENTS.
6. DIMENSIONS SHALL BE VERIFIED AND COORDINATED BY CONTRACTOR WITH PUMP SUPPLIER. ADJUST DIMENSION OF FLOOR DOOR OPENING AND LOCATION OF BEAMS AS REQUIRED AND SUBMIT UPDATED DIMENSIONS TO ENGINEER FOR REVIEW. COORDINATE TOP SLAB PENETRATIONS WITH PROCESS MECHANICAL, ELECTRICAL, AND INSTRUMENTATION DRAWINGS.
7. * COORDINATE LOCATION OF PENETRATIONS WITH WALLS, BEAMS, AND FLOOR DOOR EMBEDDED FRAMING. DO NOT ENCROACH ON BEAMS AND WALLS AND REMAIN AT LEAST 6" FROM FLOOR DOOR FRAMING. COORDINATE TOP SLAB PENETRATIONS WITH PROCESS MECHANICAL, ELECTRICAL, AND INSTRUMENTATION DRAWINGS.
8. AT WALL OPENINGS CUT HORIZONTAL REINFORCEMENT AND PROVIDE ADDITIONAL REINFORCEMENT AS SHOWN ON STANDARD DETAIL E/SD–1.

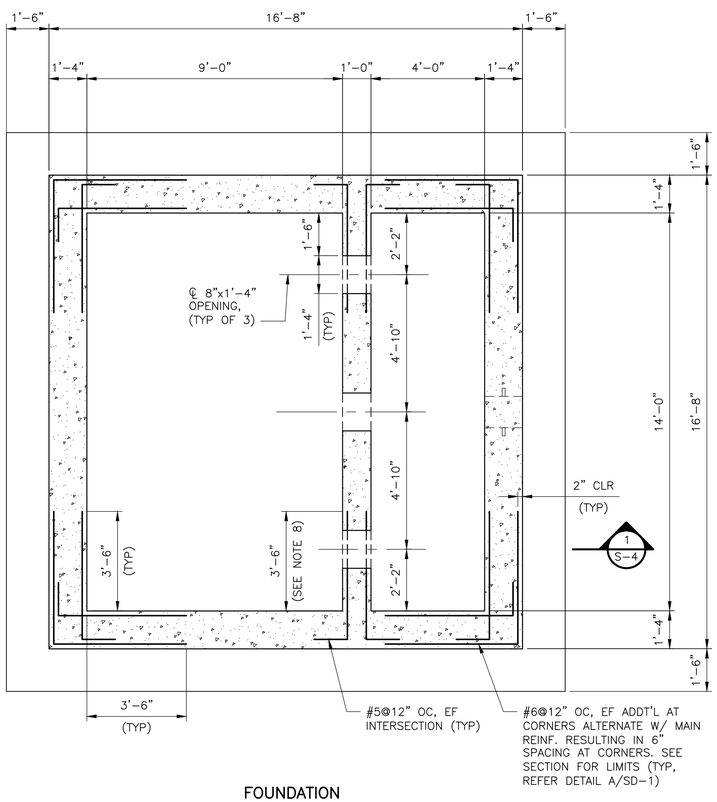

FOUNDATION

PLAN

3/8" = 1'–0"

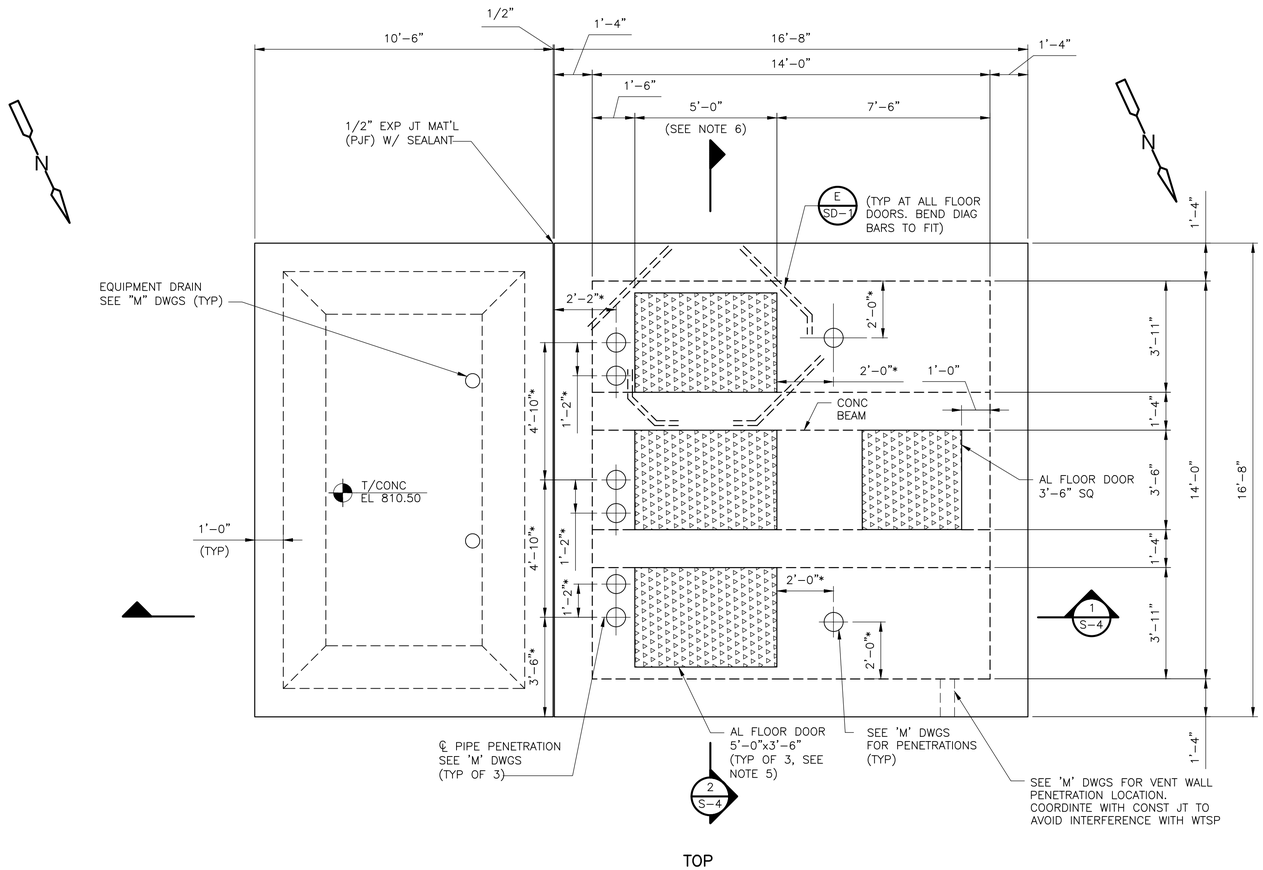

TOP

PLAN

3/8" = 1'–0"

3/8" = 1'– 0"

2 0 2 4

STATE OF TEXAS
MAHNAZ MOSTAFAZADEH
147841
LICENSED
PROFESSIONAL ENGINEER
12/11/2023

REV. NO.	DATE	DRWN	CHKD	REMARKS

DESIGNED BY: J. CLARKE
DRAWN BY: K. RAJENDRAN
SHEET CHK'D BY: W. KIAHON
CROSS CHK'D BY: E. RIVERA
APPROVED BY: M. MOSTAFAZADEH
DATE: DECEMBER 2023

CDM Smith
8310-1 N Capital of Texas Hwy, Suite 250
Austin, TX 78731
Tel: (512) 346-1100
TBPELS Firm Registration No. F-3043

CITY OF GEORGETOWN, TEXAS

CEDAR BREAKS AND D B WOOD LIFT STATIONS

CEDAR BREAKS LIFT STATION
FOUNDATION AND TOP PLANS

PROJECT NO. 2048–272644
FILE NAME: S003LSPL.dwg

SHEET NO.
S-3

Plotted: 12/12/2023 11:00:25 AM

© 2023 CDM SMITH ALL RIGHTS RESERVED.
REUSE OF DOCUMENTS: THESE DOCUMENTS AND DESIGNS PROVIDED BY PROFESSIONAL SERVICE, INCORPORATED HEREIN, ARE THE PROPERTY OF CDM SMITH AND ARE NOT TO BE USED, IN WHOLE OR PART, FOR ANY OTHER PROJECT WITHOUT THE WRITTEN AUTHORIZATION OF CDM SMITH.

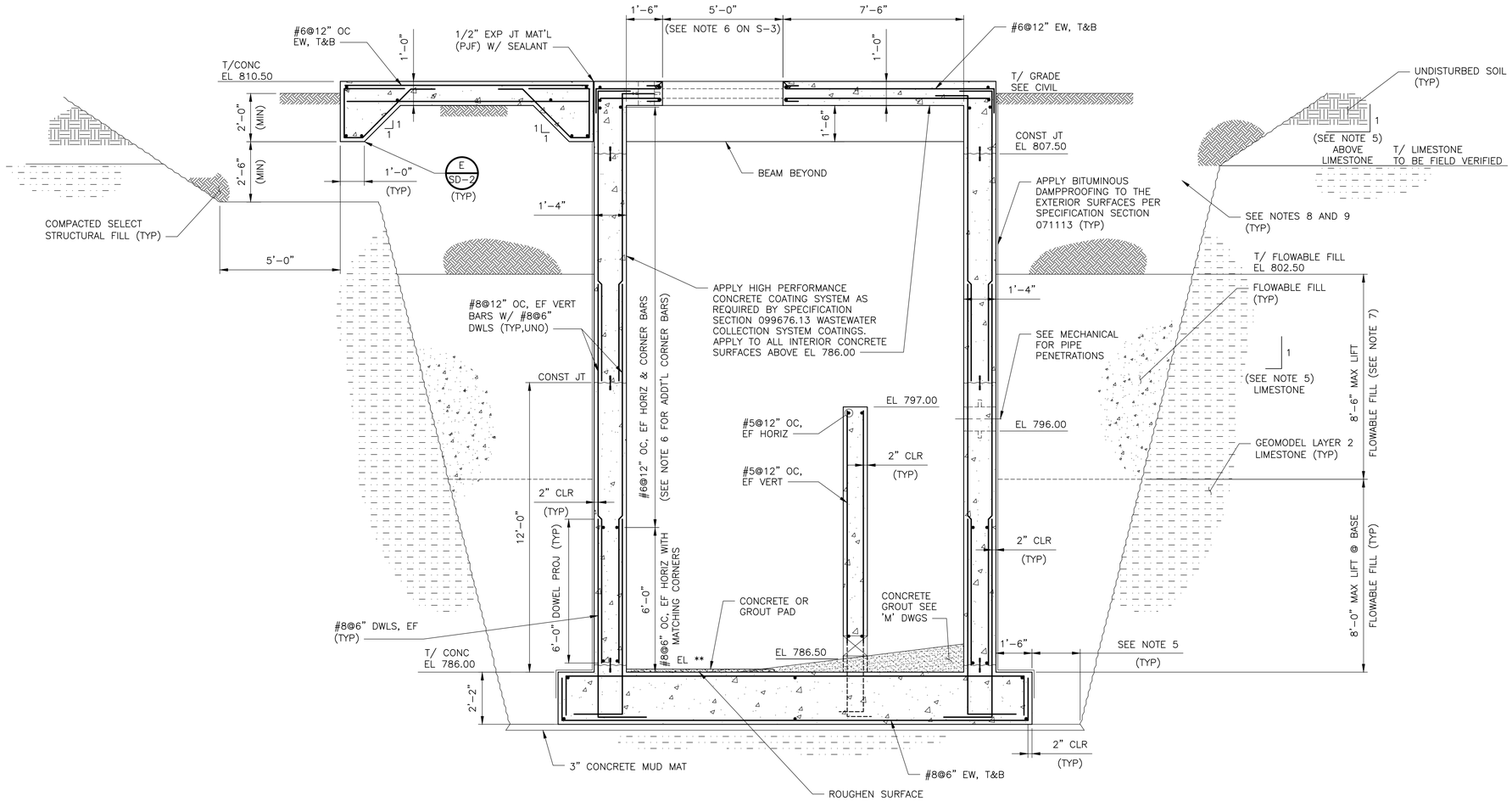

SECTION 1 / S-3
3/8" = 1'-0"

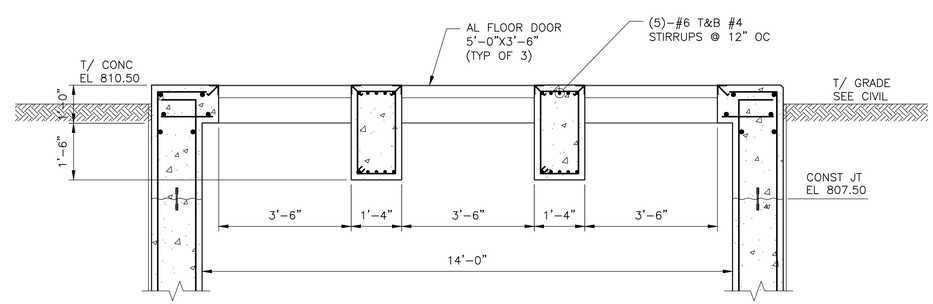

SECTION 2 / S-3
1/2" = 1'-0"

NOTES:

1. REFER TO MECHANICAL SHEETS FOR REQUIRED EQUIPMENT PAD AND PIPE SUPPORT DIMENSIONS AND LOCATIONS.
2. REFER TO MECHANICAL SHEETS FOR ALL PIPE PENETRATION LOCATIONS, AND DETAILS.
3. SEE SHEET S-3 FOR ADDITIONAL NOTES.
4. ** REQUIREMENT VARIES WITH PUMP MANUFACTURER. VERIFY REQUIREMENTS PRIOR TO CONSTRUCTION AND REVISE AS REQUIRED.
5. EXCAVATION METHOD AND LIMITS SHALL BE DETERMINED BY THE CONTRACTOR IN ACCORDANCE WITH OSHA 29 CFR AND SUBMITTED TO THE ENGINEER FOR REVIEW AND APPROVAL PRIOR TO CONSTRUCTION.
6. FOR ADDITIONAL REINFORCING AT CORNERS/INTERSECTION, SEE FOUNDATION PLAN ON SHEET S-3.
7. FLOWABLE FILL LIFTS SHALL NOT BE PLACED UNTIL THE LIFT DIRECTLY BELOW HAS HARDENED TO FULL STRENGTH.
8. SEE FOUNDATION NOTES ON S-1 FOR GENERAL REQUIREMENTS OF SITE PREPARATION, SELECT STRUCTURAL FILL, AND COMPACTION REQUIREMENTS.
9. FILL LAYERS UP TO 6 FEET BELOW FINAL GRADE SHALL BE COMPACTED TO MINIMUM 98 PERCENT OF THE STANDARD EFFORT. INCREASE COMPACTION TO MINIMUM 100 PERCENT OF THE STANDARD EFFORT (ASTM D 698) MAXIMUM DRY DENSITY FOR FILL LAYERS DEEPER THAN 6 FEET BELOW FINAL GRADE.

3/8" = 1'- 0"
1/2" = 1'- 0"

STATE OF TEXAS
MANUAZ MOSTAFAZADEH
147841
LICENSED
PROFESSIONAL ENGINEER
12/11/2023

REV. NO.	DATE	DRWN	CHKD	REMARKS

DESIGNED BY: J. CLARKE
DRAWN BY: K. RAJENDRAN
SHEET CHK'D BY: W. KIAHON
CROSS CHK'D BY: E. RIVERA
APPROVED BY: M. MOSTAFAZADEH
DATE: DECEMBER 2023

CDM Smith
8310-1 N Capital of Texas Hwy, Suite 250
Austin, TX 78731
Tel: (512) 346-1100
TBPELS Firm Registration No. F-3043

CITY OF GEORGETOWN, TEXAS

CEDAR BREAKS AND D B WOOD LIFT STATIONS

CEDAR BREAKS LIFT STATION SECTIONS

PROJECT NO. 2048-272644
FILE NAME: S004LSSC.dwg
SHEET NO. S-4

Plotted: 12/12/2023 11:08:24 AM

© 2023 CDM SMITH ALL RIGHTS RESERVED.
REUSE OF DOCUMENTS: THESE DOCUMENTS AND DESIGNS PROVIDED BY PROFESSIONAL SERVICE, INCORPORATED HEREIN, ARE THE PROPERTY OF CDM SMITH AND ARE NOT TO BE USED, IN WHOLE OR PART, FOR ANY OTHER PROJECT WITHOUT THE WRITTEN AUTHORIZATION OF CDM SMITH.

NOTES:

1. * GENERATOR PAD DESIGN IS CONSIDERED PRELIMINARY UNTIL GENERATOR SHOP DRAWING HAS BEEN SUBMITTED TO AND APPROVED BY THE ENGINEER. FINAL DESIGN, IF DIFFERENT THAN SHOWN HERE, WILL BE APPROVED AFTER FINAL GENERATOR SUBMITTAL IS APPROVED.
2. ***FOR BLOCKOUTS AND OPENINGS, PROVIDE OPENING REINFORCING PER DETAIL E/SD-1. COORDINATE SIZE AND LOCATION WITH MANUFACTURER OF FINAL EQUIPMENT, APPROVED BY THE ENGINEER.
3. MINIMUM PAD DIMENSIONS. INCREASE AS NEEDED TO FIT EQUIPMENT.
4. ** IF LIMESTONE LAYER IS ENCOUNTERED WITHIN COMPACTION ZONE, CONTACT ENGINEER TO COORDINATE REDUCTION IN COMPACTION ZONE DEPTH. NATIVE SOIL SHALL BE COMPLETELY REMOVED AND ONLY COMPACTED SELECT FILL SHALL BE USED BETWEEN BOTTOM OF SLABS ON GRADE AND THE TOP OF THE LIMESTONE ROCK LAYER.
5. REFER TO FOUNDATION NOTES ON S-1 FOR GENERAL REQUIREMENTS OF SITE PREPARATION, SELECT STRUCTURAL FILL, AND COMPACTION REQUIREMENTS.

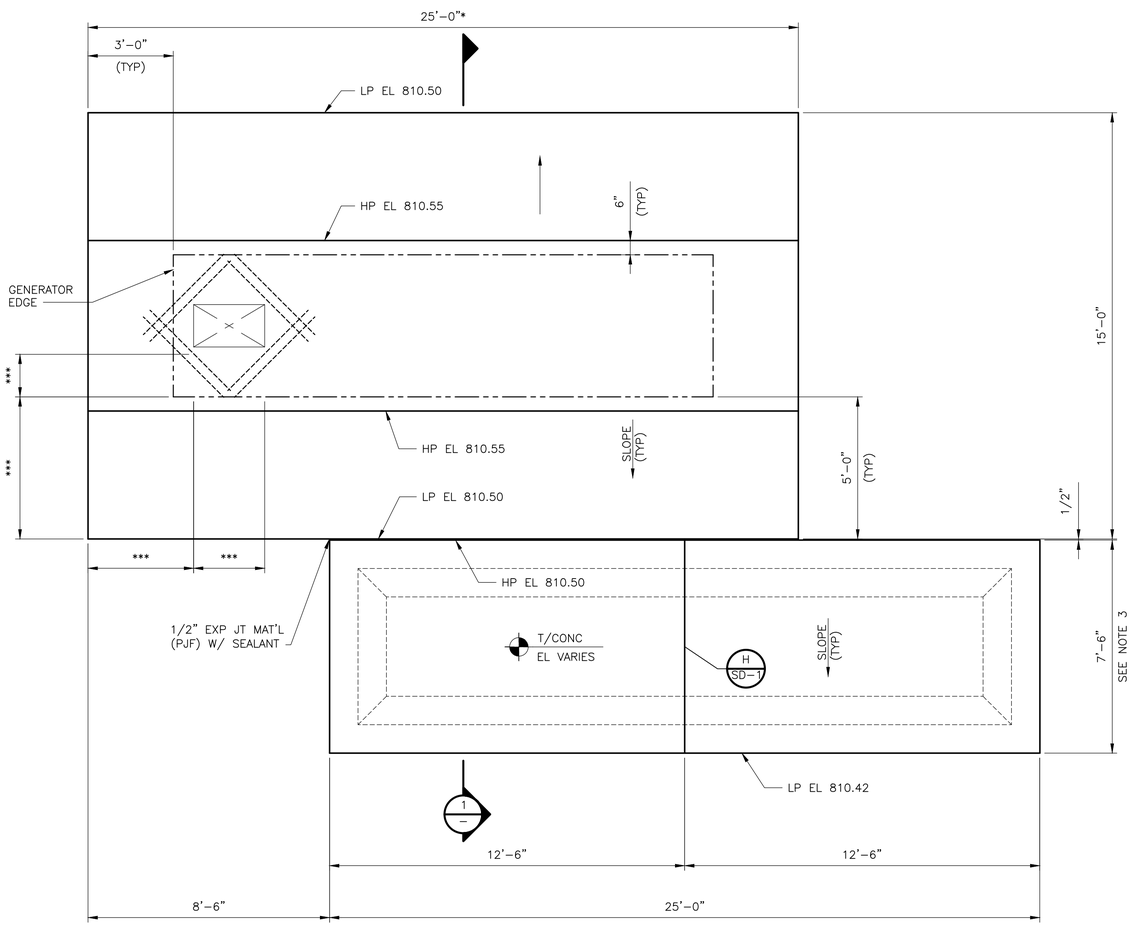

PLAN

3/8" = 1'-0"

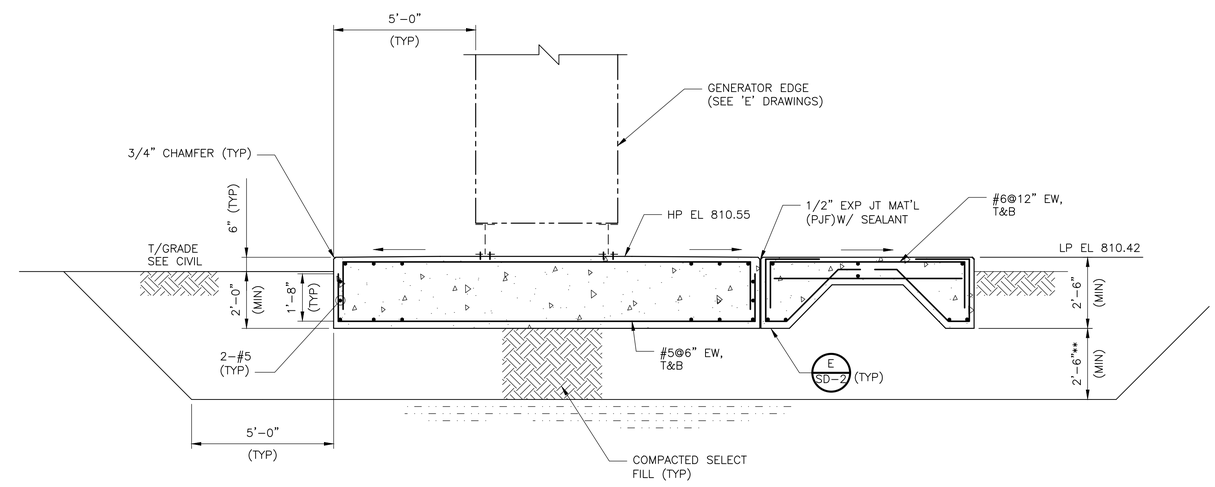

SECTION 1 / -

3/8" = 1'-0"

3/8" = 1'- 0"

2 0 2 4

STATE OF TEXAS
MAHNAZ MOSTAFAZADEH
147841
LICENSED
PROFESSIONAL ENGINEER
12/11/2023

REV. NO.	DATE	DRWN	CHKD	REMARKS

DESIGNED BY: B. ADITYA
DRAWN BY: K. RAJENDRAN
SHEET CHK'D BY: W. KIAHON
CROSS CHK'D BY: E. RIVERA
APPROVED BY: M. MOSTAFAZADEH
DATE: DECEMBER 2023

CDM Smith
8310-1 N Capital of Texas Hwy, Suite 250
Austin, TX 78731
Tel: (512) 346-1100
TBPELS Firm Registration No. F-3043

CITY OF GEORGETOWN, TEXAS

CEDAR BREAKS AND D B WOOD LIFT STATIONS

CEDAR BREAKS GENERATOR PAD
PLAN AND SECTION

PROJECT NO. 2048-272644
FILE NAME: S005CBGN.dwg
SHEET NO.
S-5

Plotted: 12/13/2023 2:57:30 PM

© 2023 CDM SMITH ALL RIGHTS RESERVED.
REUSE OF DOCUMENTS: THESE DOCUMENTS AND DESIGNS PROVIDED BY PROFESSIONAL SERVICE, INCORPORATED HEREIN, ARE THE PROPERTY OF CDM SMITH AND ARE NOT TO BE USED, IN WHOLE OR PART, FOR ANY OTHER PROJECT WITHOUT THE WRITTEN AUTHORIZATION OF CDM SMITH.

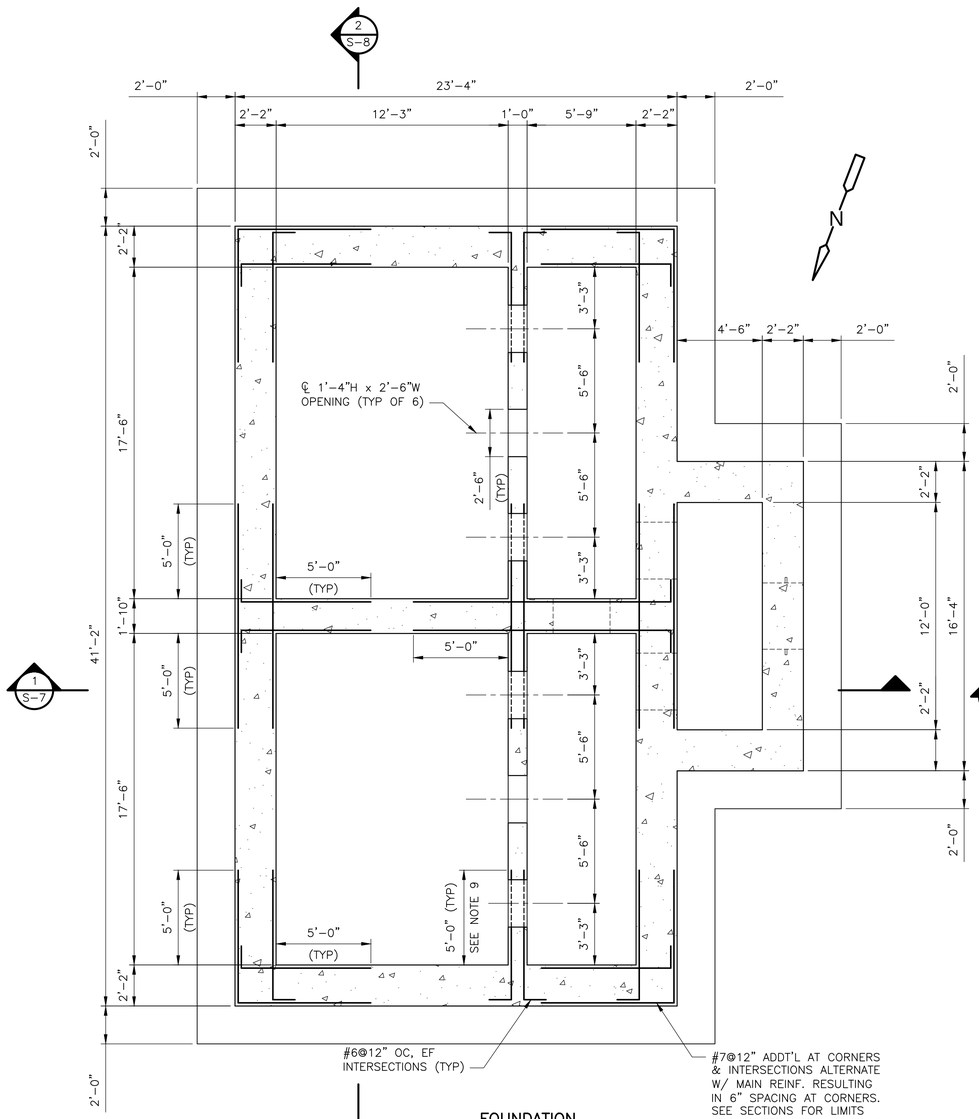

FOUNDATION

PLAN

1/4" = 1'-0"

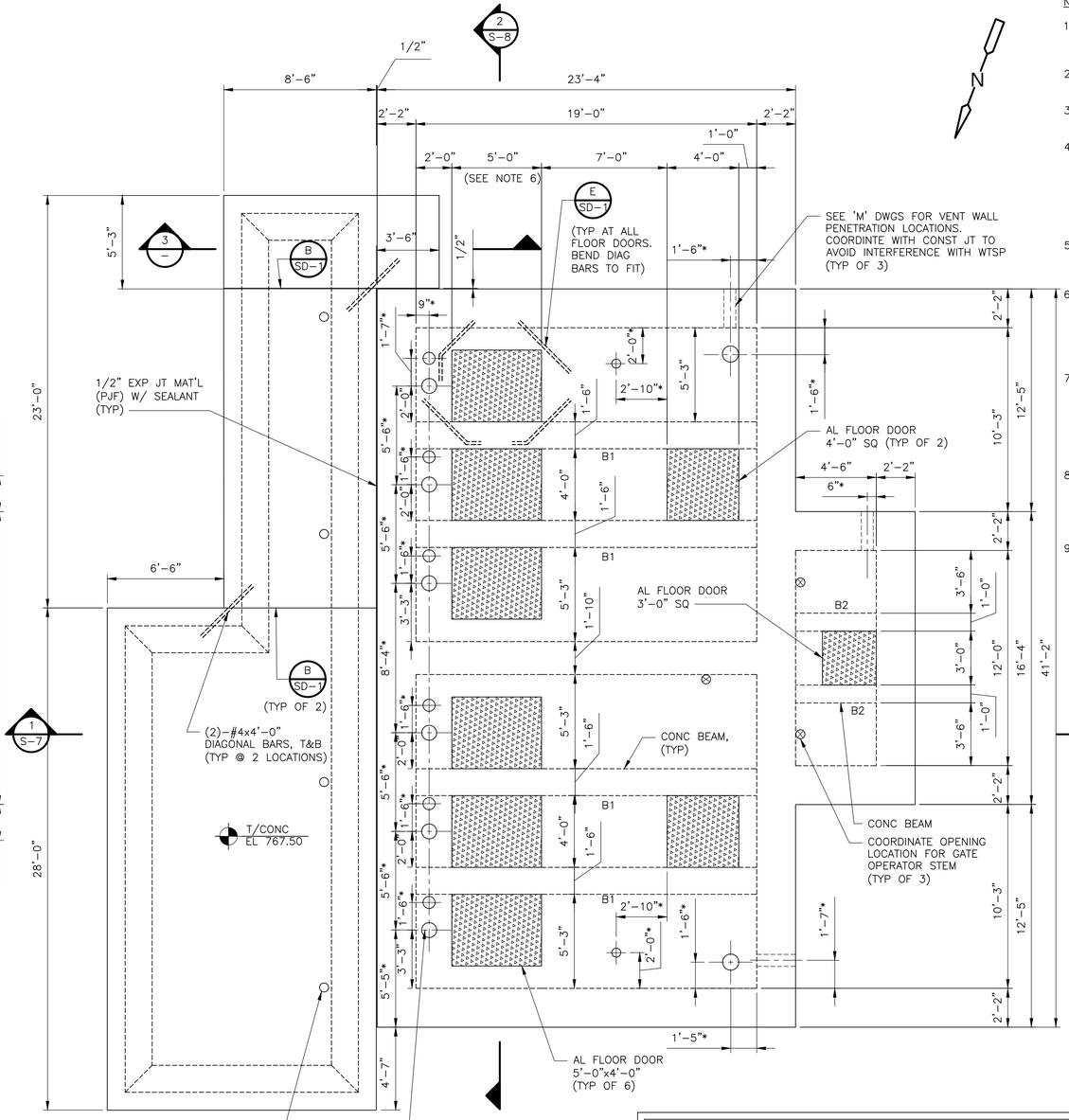

TOP

PLAN

1/4" = 1'-0"

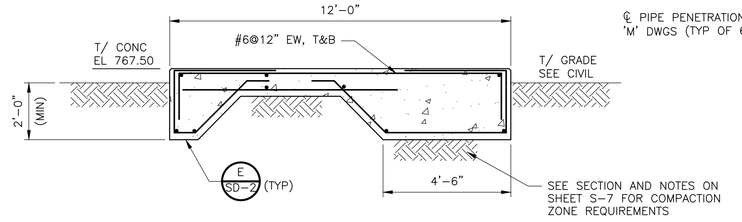

NOTES:

1. REFER TO MECHANICAL SHEETS FOR REQUIRED EQUIPMENT PAD AND PIPE SUPPORT DIMENSIONS AND LOCATIONS.
2. REFER TO MECHANICAL SHEETS FOR ALL PIPE PENETRATION LOCATIONS, AND DETAILS.
3. PROVIDE A MINIMUM OF 3" OF SEAL SLAB UNDER THE FOUNDATION SLAB.
4. REFERENCE GEOTECHNICAL INVESTIGATION ENTITLED "CITY OF GEORGETOWN – SLWTP TO SF WASTEWATER IMPROVEMENTS". TWO ZONES OF MATERIAL HAVE BEEN IDENTIFIED THAT MAY REQUIRE ATTENTION. THE CONTRACTOR SHALL TAKE APPROPRIATE MEASURES WHEN EXCAVATING FOR THIS STRUCTURE.
5. SEE SPECIFICATION SECTION 083483 FLOOR DOORS FOR FLOOR DOOR (ACCESS HATCH) REQUIREMENTS.
6. DIMENSIONS SHALL BE VERIFIED AND COORDINATED BY CONTRACTOR WITH PUMP SUPPLIER. ADJUST DIMENSION OF FLOOR OPENING AND LOCATION OF BEAMS AS REQUIRED AND SUBMIT UPDATED DIMENSIONS TO ENGINEER FOR REVIEW.
7. * COORDINATE LOCATION OF PENETRATIONS WITH WALLS, BEAMS, AND FLOOR DOOR EMBEDDED FRAMING. DO NOT ENCROACH ON BEAMS AND WALLS AND REMAIN AT LEAST 6" FROM FLOOR DOOR FRAMING. COORDINATE TOP SLAB PENETRATIONS WITH PROCESS MECHANICAL, ELECTRICAL, AND INSTRUMENTATION DRAWINGS.
8. PROVIDE OPENING REINFORCEMENT AT ALL FLOOR DOOR OPENINGS. BEND DIAGONAL BARS AS NEEDED TO AVOID CLASH WITH OTHER OPENINGS/PENETRATIONS. DO NOT CUT BARS SHORTER THAN THE MINIMUM LENGTH.
9. AT WALL OPENINGS CUT HORIZONTAL REINFORCEMENT AND PROVIDE ADDITIONAL REINFORCEMENT AS SHOWN ON STANDARD DETAIL E/SD-1.

1/4" = 1'- 0"

2 1 0 2 4

DESIGN LOAD DATA – D B WOOD LIFT STATION

SEISMIC	
BASIC SEISMIC FORCE RESISTING SYSTEM:	CONCRETE CAST-IN-PLACE WALL DESIGNED IN ACCORDANCE WITH ACI 350.3
DESIGN BASE SHEAR:	$\left[(Pi+Pw+Pr)^2 + Pc^2 + Py^2\right]^{0.5}$
SEISMIC RESPONSE COEFFICIENTS	Ci=0.042 Cc=0.006 Ct=0.020
RESPONSE MODIFICATION FACTOR:	Ri=3.0 Rc=1.0
ANALYSIS PROCEDURE USED:	EQUIVALENT LATERAL FORCE PROCEDURE

REFER TO SHEET S-1 FOR DESIGN LOAD DATA THAT IS THE SAME FOR ALL STRUCTURES.

STATE OF TEXAS
MAHNAZ MOSTAFAZADEH
141841
LICENSED
PROFESSIONAL ENGINEER
12/11/2023

REV. NO.	DATE	DRWN	CHKD	REMARKS

DESIGNED BY: B. ADITYA
DRAWN BY: K RAJENDRAN
SHEET CHK'D BY: W. KIAHON
CROSS CHK'D BY: E. RIVERA
APPROVED BY: M. MOSTAFAZADEH
DATE: DECEMBER 2023

CDM Smith
8310-1 N Capital of Texas Hwy, Suite 250
Austin, TX 78731
Tel: (512) 346-1100
TBPELS Firm Registration No. F-3043

CITY OF GEORGETOWN, TEXAS

CEDAR BREAKS AND D B WOOD LIFT STATIONS

D B WOOD LIFT STATION
FOUNDATION AND TOP PLANS

PROJECT NO. 2048-272644
FILE NAME: S006DBLS.dwg

SHEET NO.
S-6

Plotted: 12/12/2023 5:16:38 PM

© 2023 CDM SMITH ALL RIGHTS RESERVED.
REUSE OF DOCUMENTS: THESE DOCUMENTS AND DESIGNS PROVIDED BY PROFESSIONAL SERVICE, INCORPORATED HEREIN, ARE THE PROPERTY OF CDM SMITH AND ARE NOT TO BE USED, IN WHOLE OR PART, FOR ANY OTHER PROJECT WITHOUT THE WRITTEN AUTHORIZATION OF CDM SMITH.

NOTES:

1. REFER TO MECHANICAL SHEETS FOR REQUIRED EQUIPMENT PAD AND PIPE SUPPORT DIMENSIONS AND LOCATIONS.
2. REFER TO MECHANICAL SHEETS FOR ALL PIPE PENETRATION LOCATIONS, AND DETAILS.
3. SEE SHEET S-5 FOR ADDITIONAL NOTES.
4. ** REQUIREMENT VARIES WITH PUMP MANUFACTURER. VERIFY REQUIREMENTS PRIOR TO CONSTRUCTION AND REVISE AS REQUIRED.
5. EXCAVATION METHOD AND LIMITS SHALL BE DETERMINED BY THE CONTRACTOR IN ACCORDANCE WITH OSHA 29 CFR AND SUBMITTED TO THE ENGINEER FOR REVIEW AND APPROVAL PRIOR TO CONSTRUCTION.
6. FOR ADDITIONAL REINFORCING AT CORNERS/INTERSECTION, SEE FOUNDATION PLAN ON SHEET S-6.
7. FLOWABLE FILL LIFTS SHALL NOT BE PLACED UNTIL THE LIFT DIRECTLY BELOW HAS HARDENED TO FULL STRENGTH.

NOTES (CONT'D):

8. REFER TO FOUNDATION NOTES ON S-1 FOR GENERAL REQUIREMENTS OF SITE PREPARATION, SELECT STRUCTURAL FILL, AND COMPACTION REQUIREMENTS.
9. FILL LAYERS UP TO 6 FEET BELOW FINAL GRADE SHALL BE COMPACTED TO MINIMUM 98 PERCENT OF THE STANDARD EFFORT. INCREASE COMPACTION TO MINIMUM 100 PERCENT OF THE STANDARD EFFORT (ASTM D 698) MAXIMUM DRY DENSITY FOR FILL LAYERS DEEPER THAN 6 FEET BELOW FINAL GRADE.

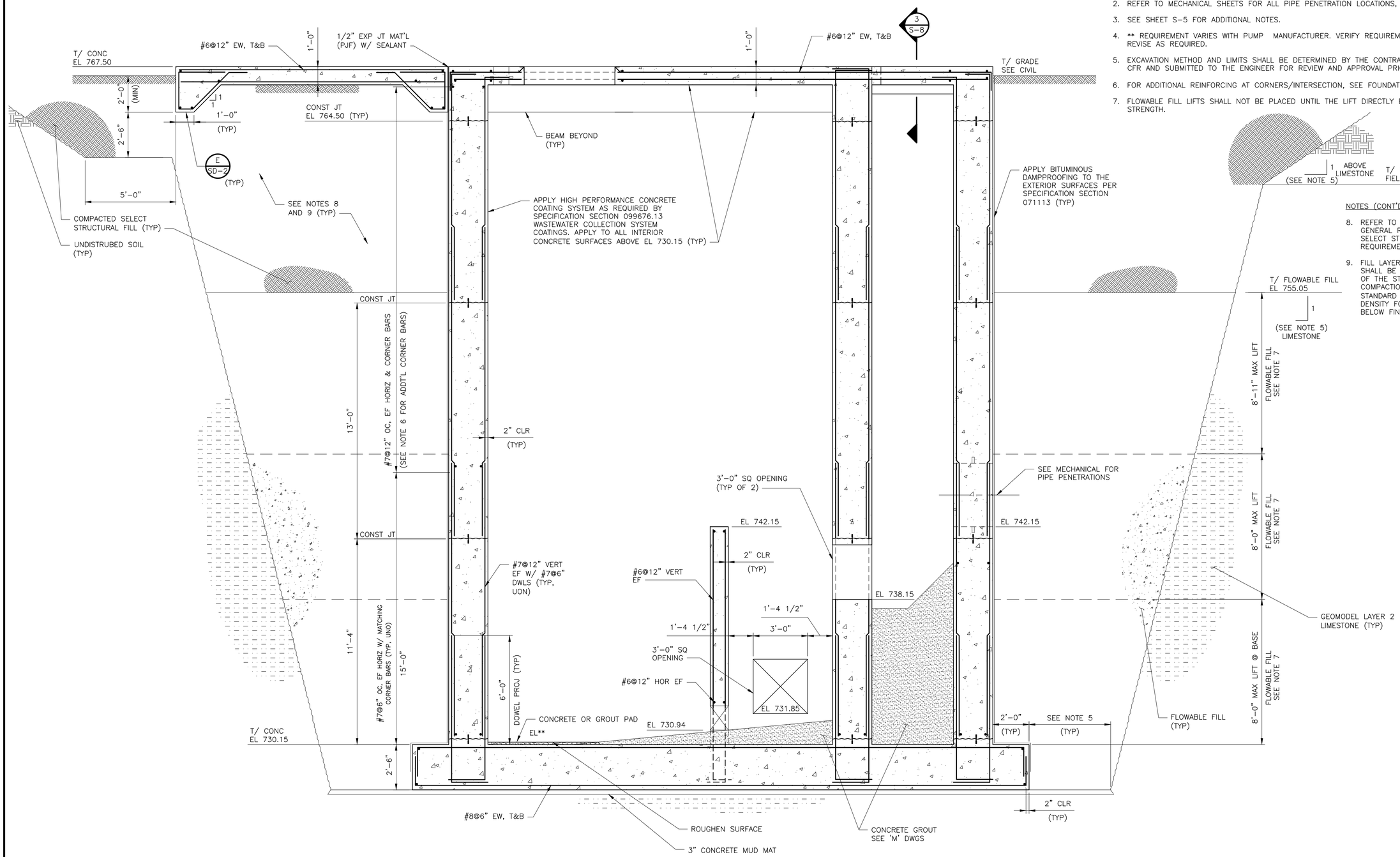

SECTION 1 / S-6
3/8" = 1'-0"

3/8" = 1'- 0"
2 0 2 4

STATE OF TEXAS
MAHNAZ MOSTAFAZADEH
141841
LICENSED
PROFESSIONAL ENGINEER
12/11/2023

REV. NO.	DATE	DRWN	CHKD	REMARKS

DESIGNED BY: B. ADITYA
DRAWN BY: K RAJENDRAN
SHEET CHK'D BY: W. KIAHON
CROSS CHK'D BY: E. RIVERA
APPROVED BY: M. MOSTAFAZADEH
DATE: DECEMBER 2023

CDM Smith
8310-1 N Capital of Texas Hwy, Suite 250
Austin, TX 78731
Tel: (512) 346-1100
TBPELS Firm Registration No. F-3043

CITY OF GEORGETOWN, TEXAS

CEDAR BREAKS AND D B WOOD LIFT STATIONS

D B WOOD LIFT STATION
SECTION I

PROJECT NO. 2048-272644
FILE NAME: S007LSSC.dwg
SHEET NO.
S-7

© 2023 CDM SMITH ALL RIGHTS RESERVED
REUSE OF DOCUMENTS: THESE DOCUMENTS AND DESIGNS PROVIDED BY PROFESSIONAL SERVICE, INCORPORATED HEREIN, ARE THE PROPERTY OF CDM SMITH AND ARE NOT TO BE USED, IN WHOLE OR PART, FOR ANY OTHER PROJECT WITHOUT THE WRITTEN AUTHORIZATION OF CDM SMITH.

Plotted: 12/12/2023 2:08:18 PM

© 2023 CDM SMITH ALL RIGHTS RESERVED.
REUSE OF DOCUMENTS: THESE DOCUMENTS AND DESIGNS PROVIDED BY PROFESSIONAL SERVICE, INCORPORATED HEREIN, ARE THE PROPERTY OF CDM SMITH AND ARE NOT TO BE USED, IN WHOLE OR PART, FOR ANY OTHER PROJECT WITHOUT THE WRITTEN AUTHORIZATION OF CDM SMITH.

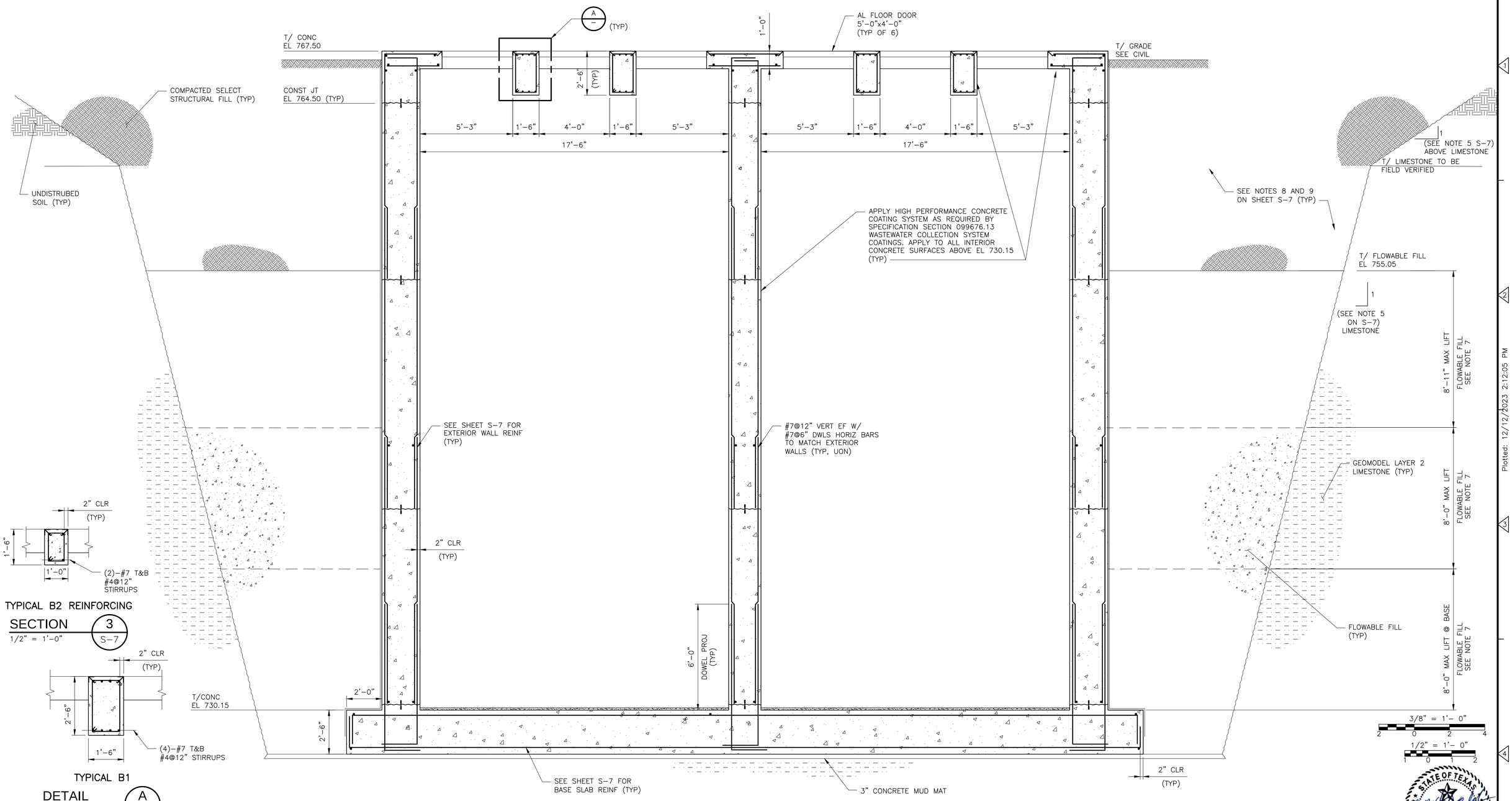

STATE OF TEXAS
MAHNAZ MOSTAFAZADEH
147841
LICENSED
PROFESSIONAL ENGINEER
12/11/2023

REV. NO.	DATE	DRWN	CHKD	REMARKS

DESIGNED BY: B. ADITYA
DRAWN BY: K. RAJENDRAN
SHEET CHK'D BY: W. KIAHON
CROSS CHK'D BY: E. RIVERA
APPROVED BY: M. MOSTAFAZADEH
DATE: DECEMBER 2023

CDM Smith
8310-1 N Capital of Texas Hwy, Suite 250
Austin, TX 78731
Tel: (512) 346-1100
TBPELS Firm Registration No. F-3043

CITY OF GEORGETOWN, TEXAS

CEDAR BREAKS AND D B WOOD LIFT STATIONS

D B WOOD LIFT STATION
SECTIONS AND DETAIL

PROJECT NO. 2048-272644
FILE NAME: S008LSSC.dwg
SHEET NO.
S-8

Plotted: 12/12/2023 2:12:05 PM

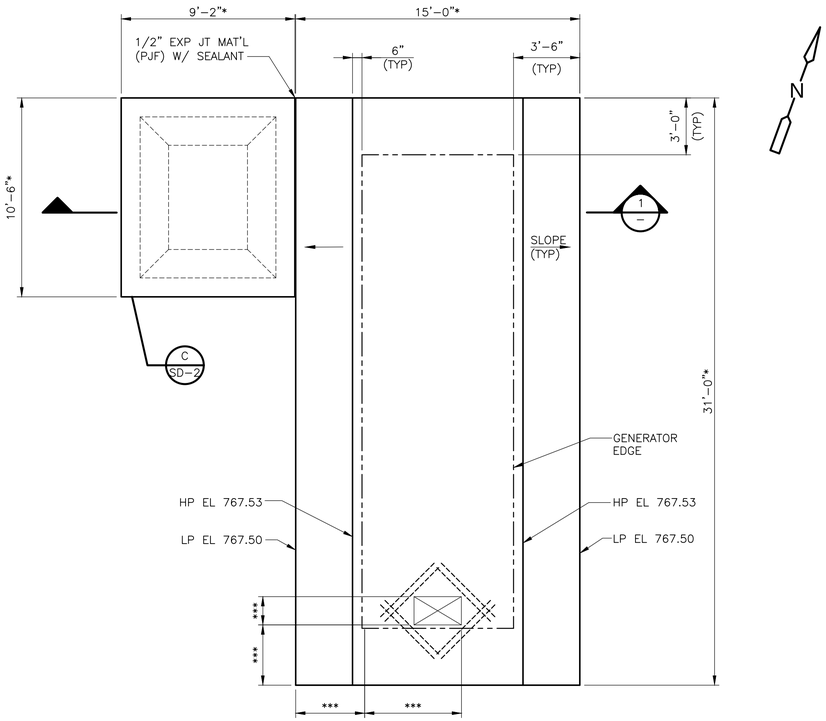

PLAN
1/4" = 1'-0"

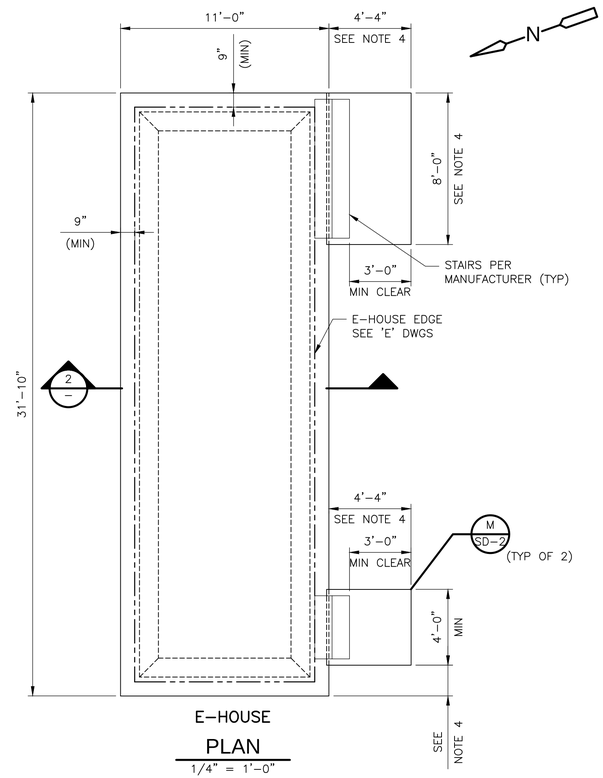

E-HOUSE
PLAN
1/4" = 1'-0"

NOTES:

1. * GENERATOR AND ATS PAD DIMENSIONS ARE CONSIDERED PRELIMINARY UNTIL GENERATOR AND ATS SHOP DRAWINGS HAVE BEEN SUBMITTED TO AND APPROVED BY THE ENGINEER. FINAL DESIGN, IF DIFFERENT THAN SHOWN HERE, WILL BE APPROVED AFTER FINAL GENERATOR SUBMITTAL IS APPROVED.
2. *** FOR BLOCKOUTS AND OPENINGS, PROVIDE OPENING REINFORCING PER DETAIL E/SD-1. COORDINATE SIZE AND LOCATION WITH MANUFACTURER OF FINAL EQUIPMENT, APPROVED BY THE ENGINEER.
3. ** IF LIMESTONE LAYER IS ENCOUNTERED WITHIN 3-FT COMPACTION ZONE, CONTACT ENGINEER TO COORDINATE REDUCTION IN COMPACTION ZONE DEPTH. NATIVE SOIL SHALL BE COMPLETELY REMOVED AND ONLY COMPACTED SELECT FILL SHALL BE USED BETWEEN BOTTOM OF SLABS ON GRADE AND THE TOP OF THE LIMESTONE ROCK LAYER.
4. COORDINATE SIZE OF E-HOUSE PAD AND CONNECTED ENTRANCE LANDINGS WITH APPROVED ELECTRICAL POWER HOUSE SHOP DRAWING THAT HAS BEEN REVIEWED AND APPROVED BY ENGINEER. THE DIMENSIONS AND LANDING LOCATIONS SHOWN HERE ARE PRELIMINARY AND ARE SUBJECT TO CHANGE. CONTRACTOR SHALL SUBMIT MARKUPS OF CHANGES FOR THE PAD LAYOUT ONCE FINAL APPROVED E-HOUSE SUBMITTAL IS RECEIVED. REFER TO ELECTRICAL DRAWINGS AND SPECIFICATION SECTION 266100 ELECTRICAL POWER HOUSE FOR MORE INFORMAITON ON THE E-HOUSE.
5. REFER TO FOUNDATION NOTES ON S-1 FOR GENERAL REQUIREMENTS OF SITE PREPARATION, SELECT STRUCTURAL FILL, AND COMPACTION REQUIREMENTS.

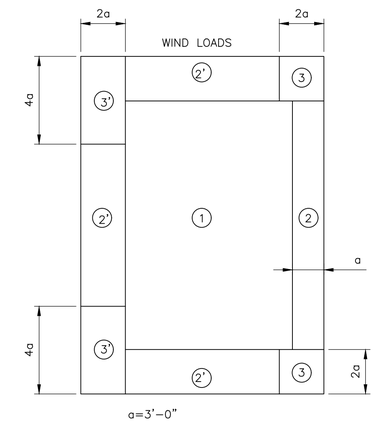

COMPONENTS & CLADDING E-HOUSE ROOF WIND PRESSURES (PSF)		
ZONE	MAXIMUM POSITIVE PRESSURE	MAXIMUM SUCTION PRESSURE
1	21.3	-43.9
2	21.3	-47.9
2'	21.3	-55.9
3	21.3	-54.8
3'	21.3	-71

NOTE: ALL TABULATED VALUES ARE STRENGTH LEVEL (1.0W) PRESSURES.

DETAIL A
NTS

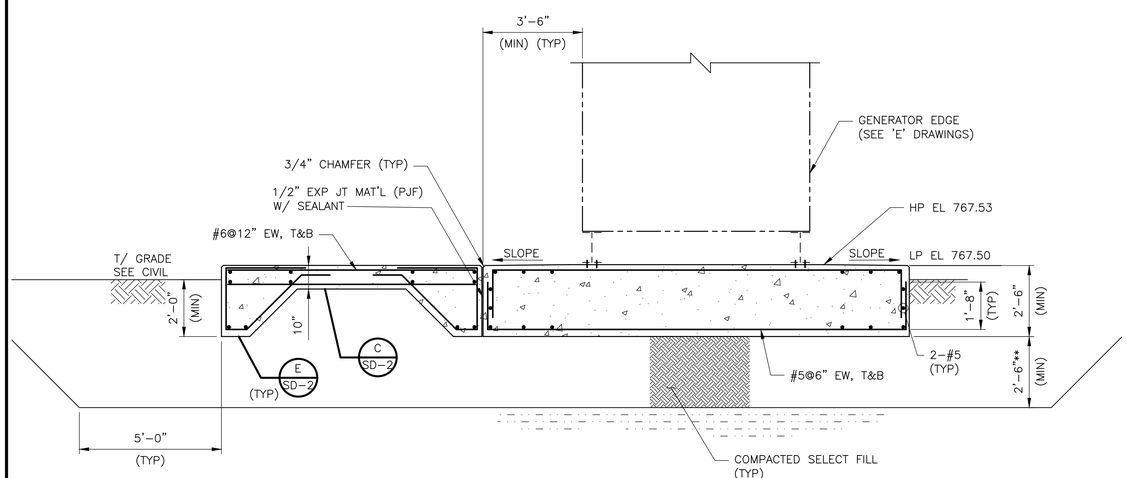

SECTION 1
3/8" = 1'-0"

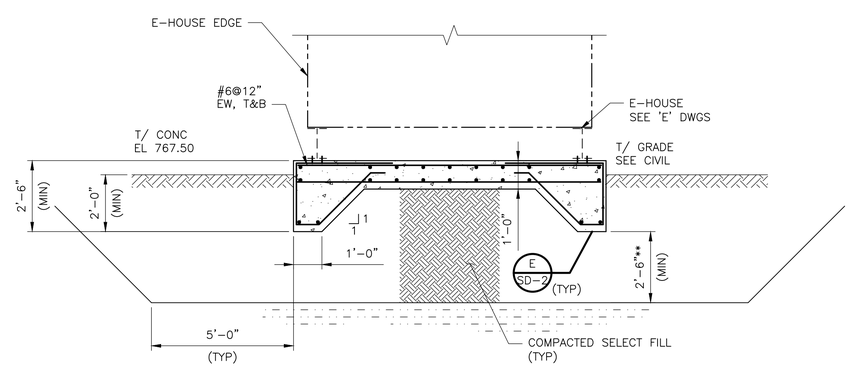

SECTION 2
3/8" = 1'-0"

3/8" = 1'- 0"
1/4" = 1'- 0"

STATE OF TEXAS
MAHNAZ MOSTAFAZADEH
141841
LICENSED
PROFESSIONAL ENGINEER
12/11/2023

REV. NO.	DATE	DRWN	CHKD	REMARKS

DESIGNED BY: B. ADITYA
DRAWN BY: K. RAJENDRAN
SHEET CHK'D BY: W. KIAHON
CROSS CHK'D BY: E. RIVERA
APPROVED BY: M. MOSTAFAZADEH
DATE: DECEMBER 2023

CDM Smith
8310-1 N Capital of Texas Hwy, Suite 250
Austin, TX 78731
Tel: (512) 346-1100
TBPELS Firm Registration No. F-3043

CITY OF GEORGETOWN, TEXAS

CEDAR BREAKS AND D B WOOD LIFT STATIONS

D B WOOD GENERATOR AND E-HOUSE PAD PLANS AND SECTIONS

PROJECT NO. 2048-272644
FILE NAME: S009DGPL.dwg
SHEET NO.
S-9

Plotted: 12/13/2023 3:03:27 PM

© 2023 CDM SMITH ALL RIGHTS RESERVED.
REUSE OF DOCUMENTS: THESE DOCUMENTS AND DESIGNS PROVIDED BY PROFESSIONAL SERVICE, INCORPORATED HEREIN, ARE THE PROPERTY OF CDM SMITH AND ARE NOT TO BE USED, IN WHOLE OR PART, FOR ANY OTHER PROJECT WITHOUT THE WRITTEN AUTHORIZATION OF CDM SMITH.

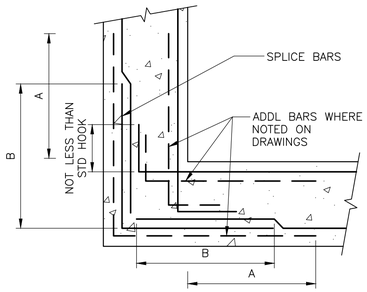

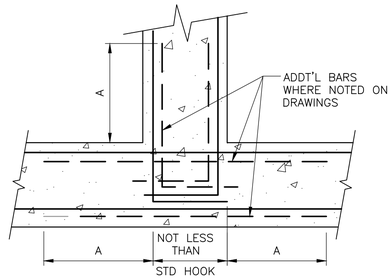

NOTES:

1. A = 1/4 CLEAR HORIZ SPAN, BUT NOT LESS THAN REQUIRED TENSION LAP NOR GREATER THAN 10 FEET.
2. B= TENSION LAP SPLICE
3. SPLICE BARS SHALL BE SAME SIZE & SPACING AS LARGER OF BARS BEING SPLICED, UNO, AND SHALL BE LAPPED W/TYPICAL WALL REINFORCING.
4. EXTEND BAR HOOKED ENDS TO FAR FACE OF WALL
5. ALTERNATE TYPICAL AND ADDT'L BARS, ADDT'L BARS TO BE IN SAME VERTICAL PLANE AS TYP WALL REINFORCING,
   ——— DENOTES TYP REINF
   — — — DENOTES ADDT'L REINF
6. REBAR DETAIL HAS OPTION TO PROVIDE "B" TENSION LAP SPLICE FOR ALL BARS AT END OF "A" LENGTH CORNER BAR, SO ALL CORNER BARS (TYPICAL & ADDT'L) HAVE SAME LENGTHS.

CORNER REINFORCING

DETAIL A
NTS –

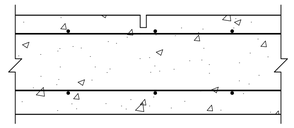

NOTES:

1. SAWCUT WIDTH ⅛" MINIMUM–¼" MAXIMUM.
2. SAWCUT DEPTH 1" MINIMUM–1½" MAXIMUM.
3. FILL JOINT TO FULL DEPTH WITH SELF–LEVELING SEALANT. USE BACKER ROD OR BOND BREAKER TAPE PER MANUFACTURER

CONTROL JOINT

DETAIL B
NTS –

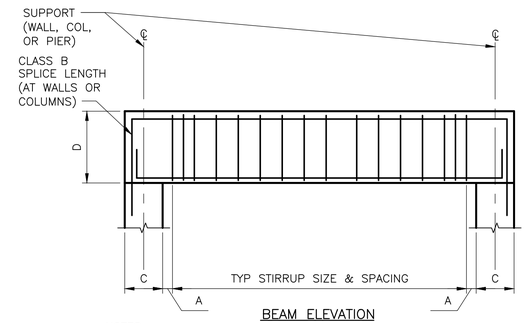

BEAM ELEVATION

NOTATION:

A. MAXIMUM 2 INCHES
C. SUPPORT WIDTH, INCHES
D. BEAM DEPTH, INCHES

NOTES:

1. WHERE SAME NUMBER & SIZE OF REINF BARS CONTINUE FROM SPAN TO SPAN, SPLICES MAY BE OMITTED. WHERE SPLICES ARE PROVIDED, LOCATE TOP SPLICES AT MIDSPAN & BOTTOM SPLICES OVER SUPPORTS AS INDICATED.
2. STIRRUPS SHALL BE CLOSED STIRRUPS, UNO.

CONCRETE BEAM

DETAIL C
NTS –

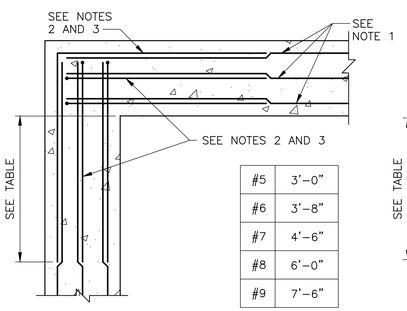

#5	3'–0"
#6	3'–8"
#7	4'–6"
#8	6'–0"
#9	7'–6"

CORNER REINFORCING

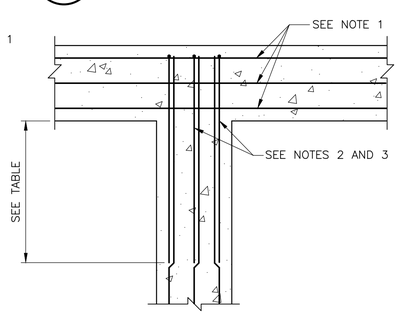

INTERSECTION REINFORCING

NOTES:

1. BASIC SLAB/WALL/BEAM REINFORCING AS SHOWN ON DESIGN DRAWINGS.
2. SIZE AND SPACING OF BAR TO MATCH WALL/BEAM REINFORCEMENT AS SHOWN ON DESIGN DRAWINGS.
3. FOR ADDITIONAL BARS AT CORNERS AND INTERSECTIONS SEE DESIGN DRAWINGS.
4. FOR DOWEL SIZE AND SPACING SEE DESIGN DRAWINGS.
5. FOR WALLS, TERMINATE WATERSTOP AND KEYWAY 8" BELOW TOP OF WALL.

BEAM/GRADE BEAM REINFORCING

DETAIL D
NTS –

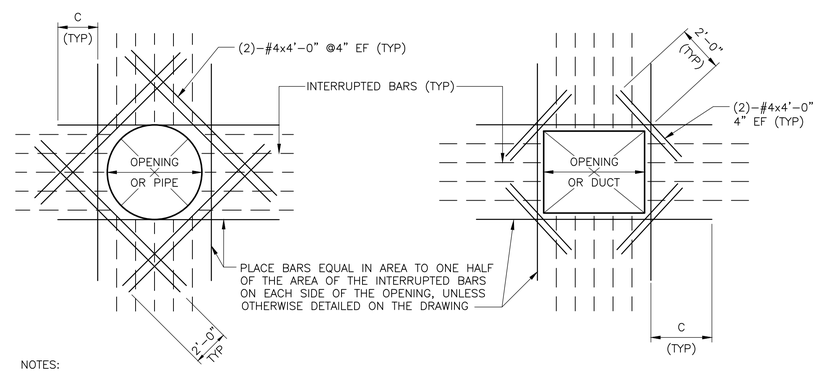

NOTES:

1. DETAIL IS TYPICAL FOR ALL OPENINGS 12" AND GREATER IN CONCRETE WALLS AND SLABS UNLESS OTHERWISE NOTED. SPREAD REINFORCING AT SMALLER OPENINGS.
2. BARS ARE NOT REQUIRED AT AN OPENING EDGE PARALLEL TO AND WITHIN 6 INCHES OF A WALL OR BEAM.
3. C= TENSION DEVELOPMENT LENGTH: PROVIDE STD HOOK IF FULL DEVELOPMENT LENGTH IS NOT POSSIBLE.
4. REINFORCING STEEL IS TO BE CARRIED ACROSS ALL CONSTRUCTION JOINTS.
5. WHERE OPENING IS WITHIN 4'–0" OF BASE SLAB, PROVIDE MATCHING DOWELS FOR ADDITIONAL BARS.

REINFORCING AT OPENINGS

DETAIL E
NTS –

2" & 3" COVER
6" OR GREATER SPACING

F'c=4,500 PSI
Fy=60,000 PSI

BAR SIZE	ALL (INCHES)					
	90° HOOK		SPLICE		STRAIGHT DEVELOPMENT	
	Idh	A	TOP BARS	OTHER BARS	TOP BARS	OTHER BARS
3	7	6	14	12	12	12
4	9	8	19	14	14	12
5	12	10	23	18	18	14
6	14	12	28	21	21	17
7	16	14	40	31	31	24
8	18	16	46	35	35	29
9	21	19	57	44	44	34
10	23	22	70	54	54	41
11	26	24	84	65	65	50

NOTES

1. TOP BARS ARE HORIZONTAL BARS PLACED SUCH THAT MORE THAN 12" OF CONCRETE IS CAST BELOW THE BAR. HORIZONTAL WALL BARS ARE TOP BARS.
2. 90° HOOKS SHALL BE LOCATED WITHIN THE CONFINED CORE OF A COLUMN OR BOUNDARY ELEMENT.
3. TABLE IS VALID FOR DESIGN BASED ON ACI 319–19 AND 350–06
4. TABLE IS BASED ON f'c = 4500 psi. LAP SPLICE AND DEVELOPMENT LENGTHS SHALL BE ADJUSTED FOR OTHER CONCRETE COMPRESSIVE STRENGTHS AS FOLLOWS:

f'c	MULTIPLIER
3000 PSI	1.23
3500 PSI	1.14
4000 PSI	1.06

5. FOR COVER AND SPACING GEOMETRY NOT SHOWN ALL HOOKS, SPLICES AND DEVELOPMENT LENGTHS SHALL BE APPROVED IN WRITING BY THE ENGINEER OF RECORD.
6. LAPPED SPLICES SHALL NOT BE MADE AT POINTS OF MAXIMUM STRESS UNLESS NOTED OTHERWISE. INDICATED ON THE DRAWING OR DETERMINED BY ENGINEER.
7. UNLESS NOTED OTHERWISE ON DRAWINGS, THE BARS AT A LAP SPLICE SHALL BE IN CONTACT WITH EACH OTHER.
8. FOR STRAIGHT DEVELOPMENT LENGTH, DIVIDE SPLICE LENGTH BY 1.3, ROUNDING OFF TO THE NEXT WHOLE NUMBER, BUT NOT LESS THAN 12".

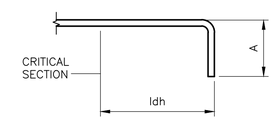

STANDARD HOOKS, CLASS B LAP SPLICE AND DEVELOPMENT LENGTHS (FOR UNCOATED BARS)

LAP SPLICE

DETAIL F
NTS –

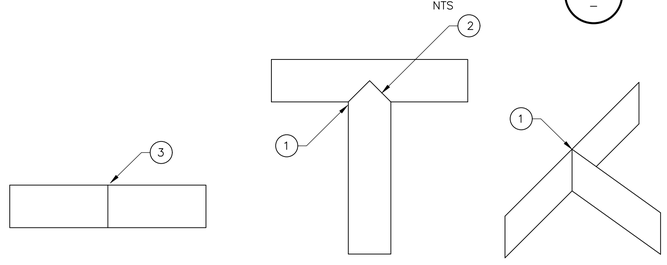

FIELD SPLICE

FLAT TEE

VERTICAL TEE

WATERSTOP NOTES:

1. FACTORY FABRICATED INTERSECTION PIECES.
2. USE THERMOSTATICALLY CONTROLLED SPLICING IRON TO WELD INTERSECTION PIECE TO FIELD PIECE SPLICING IRON SHALL BE DESIGNED SPECIFICALLY FOR THE WATERSTOP BEING SPLICED.
3. USE INDIRECT SOURCE OF HEAT ONLY. USE OF DIRECT FLAME IS SPECIFICALLY PROHIBITED.
4. FOLLOW MANUFACTURER'S RECOMMENDATIONS FOR ALL SPLICING AND WELDING REQUIREMENTS.

PVC WATERSTOP SPLICE AND JOINTS

DETAIL G
NTS –

STATE OF TEXAS
MAHNAZ MOSTAFAZADEH
147841
LICENSED
PROFESSIONAL ENGINEER
12/11/2023

REV. NO.	DATE	DRWN	CHKD	REMARKS

DESIGNED BY: E. RIVERA
DRAWN BY: J. GILEZAN
SHEET CHK'D BY: W. KIAHON
CROSS CHK'D BY: E. RIVERA
APPROVED BY: M. MOSTAFAZADEH
DATE: DECEMBER 2023

CDM Smith
8310-1 N Capital of Texas Hwy, Suite 250
Austin, TX 78731
Tel: (512) 346-1100
TBPELS Firm Registration No. F-3043

CITY OF GEORGETOWN, TEXAS

CEDAR BREAKS AND D B WOOD LIFT STATIONS

STRUCTURAL
STANDARD DETAILS I

PROJECT NO. 2048–272644
FILE NAME: SZ01NFDT.dwg
SHEET NO.
SD-1

Plotted: 12/12/2023 2:52:15 PM

© 2023 CDM SMITH ALL RIGHTS RESERVED.
REUSE OF DOCUMENTS: THESE DOCUMENTS AND DESIGNS PROVIDED BY PROFESSIONAL SERVICE, INCORPORATED HEREIN, ARE THE PROPERTY OF CDM SMITH AND ARE NOT TO BE USED, IN WHOLE OR PART, FOR ANY OTHER PROJECT WITHOUT THE WRITTEN AUTHORIZATION OF CDM SMITH.

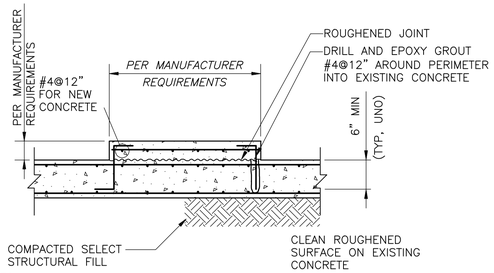

NOTES:

1. FOR EQUIPMENT PADS > 12" TALL PROVIDE CONTINUOUS #4@12 BAR ALL AROUND SIDES.
2. PROVIDE 6" MIN EDGE DISTANCE ON ALL EQUIP ANCHOR BOLTS.

HOUSEKEEPING PAD FOR NEW OR EXISTING SLAB

DETAIL A
NTS

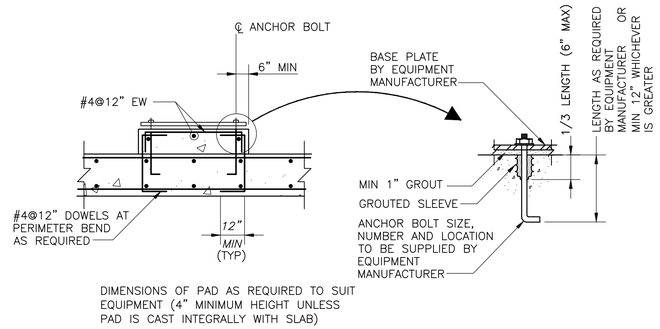

EQUIPMENT PAD

DETAIL B
NTS

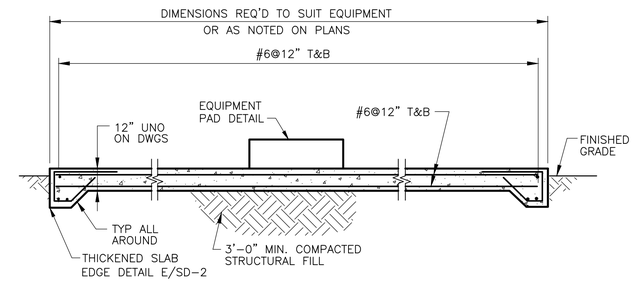

EQUIPMENT SLAB

DETAIL C
NTS

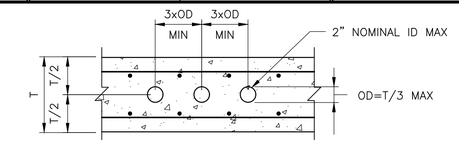

CONDUIT NOTES:

1. NO CONDUIT SHALL BE EMBEDDED IN STRUCTURAL BEAMS, COLUMNS, WALLS OR SLABS UNLESS SPECIFICALLY SHOWN ON THE STRUCTURAL DRAWING
2. CONDUIT SHALL BE PLACED 6" BELOW SLABS
3. WHERE CONDUIT MUST PASS THROUGH A SLAB OR WALL, MINIMUM SIZE AND SPACING REQUIREMENT PER ACI 318–SECTION 6.3 AND DETAIL D/SD–2
4. ALUMINUM SHALL NOT BE EMBEDDED IN CONCRETE UNLESS COATED TO PREVENT ALUMINUM–CONCRETE REACTION

CONDUIT PASSING THROUGH SLAB OR WALL

DETAIL D
NTS

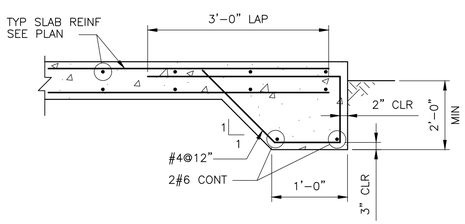

THICKENED EDGE SLAB

DETAIL E
NTS

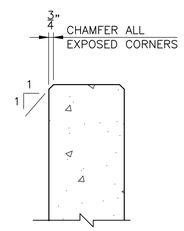

CHAMFER

DETAIL F
NTS

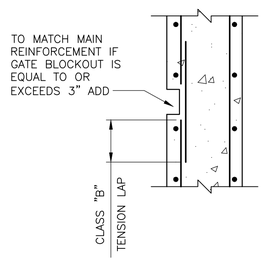

WALL GATE BLOCKOUT

DETAIL G
NTS

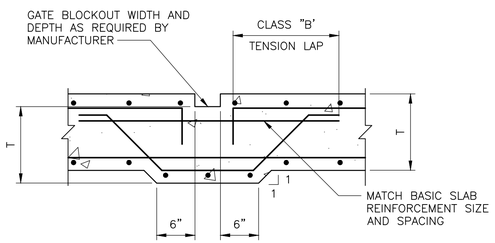

SLAB GATE BLOCKOUT

DETAIL H
NTS

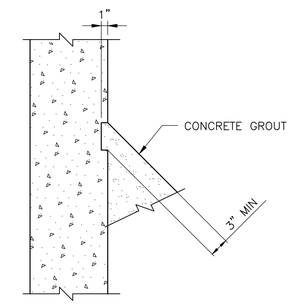

GROUT FILLET

DETAIL J
NTS

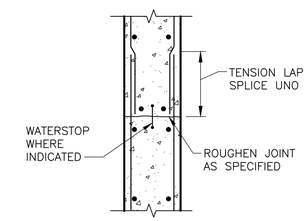

NOTES:

1. DETAIL SHOWN FOR WALLS; SLABS SIMILAR.

CONSTRUCTION JOINT

DETAIL K
NTS

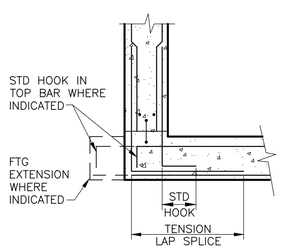

END WALL

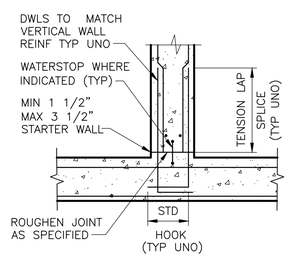

INTERMEDIATE WALL

NOTES:

1. STARTER WALL MAY BE ELIMINATED AT JOINTS WITHOUT WATERSTOP.
2. SEE INTERMEDIATE WALL FOR INFORMATION NOT GIVEN FOR END WALL.
3. PROVIDE ADDITIONAL REINFORCEMENT EF IN BOT 3'–0" OF WALL WHERE NOTED ON DRAWINGS. BARS SHALL BE SAME SIZE AS AND LOCATED HALFWAY BETWEEN TYPICAL HORIZ REINFORCEMENT.

WALL CONSTRUCTION JOINT AT BASE SLAB

DETAIL L
NTS

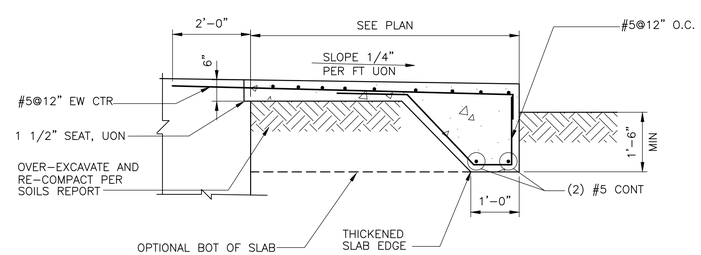

NOTES:

1. LANDING WIDTH = WIDTH OF DOOR OPENING +6" EACH SIDE UNLESS OTHERWISE NOTED.
2. WHERE EMBEDMENT LENGTH IS NOT AVAILABLE PROVIDE STANDARD HOOK.

DOOR APRON/ SLAB

DETAIL M
NTS

STATE OF TEXAS
MAHNAZ MOSTAFAZADEH
147841
LICENSED
PROFESSIONAL ENGINEER
12/11/2023

REV. NO.	DATE	DRWN	CHKD	REMARKS

DESIGNED BY: E. RIVERA
DRAWN BY: J. GILEZAN
SHEET CHK'D BY: W. KIAHON
CROSS CHK'D BY: E. RIVERA
APPROVED BY: M. MOSTAFAZADEH
DATE: DECEMBER 2023

CDM Smith
8310-1 N Capital of Texas Hwy, Suite 250
Austin, TX 78731
Tel: (512) 346-1100
TBPELS Firm Registration No. F-3043

CITY OF GEORGETOWN, TEXAS

CEDAR BREAKS AND D B WOOD LIFT STATIONS

STRUCTURAL
STANDARD DETAILS II

PROJECT NO. 2048–272644
FILE NAME: SZ02NFDT.dwg

SHEET NO.
SD-2

© 2023 CDM SMITH ALL RIGHTS RESERVED.
REUSE OF DOCUMENTS: THESE DOCUMENTS AND DESIGNS PROVIDED BY PROFESSIONAL SERVICE, INCORPORATED HEREIN, ARE THE PROPERTY OF CDM SMITH AND ARE NOT TO BE USED, IN WHOLE OR PART, FOR ANY OTHER PROJECT WITHOUT THE WRITTEN AUTHORIZATION OF CDM SMITH.

Plotted: 12/12/2023 7:16:34 PM

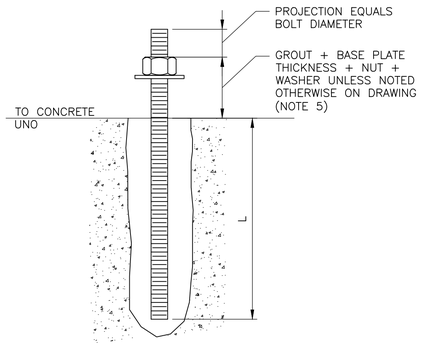

316 SS ADHESIVE ANCHOR BOLTS

DETAIL A
NTS –

NOTES:

1. BOLT EDGE DISTANCE SHALL BE A MINIMUM OF 1.5 X L, UNO ON THE DRAWINGS. SMALLER EDGE DISTANCE SHALL BE APPROVED BY THE ENGINEER OF RECORD.
2. MINIMUM CENTER TO CENTER SPACING OF BOLTS SHALL BE 3 X L, UNO ON THE DRAWINGS. SMALLER BOLT SPACING SHALL BE APPROVED BY THE ENGINEER OF RECORD.
3. HOLES SHALL BE DRILLED USING A HAMMER DRILL BIT UNO.
4. PROVIDE 1 1/2" – INCHES NON–SHRINK GROUT UNDER BASE PLATE, UNO.
5. BOLT SHALL CONFORM TO ASTIM F 593, TYPE 316 CW1 FOR DIAMETERS BETWEEN 1/4 TO 5/8 – INCHES INCLUSIVE, AND ASTM F 593, TYPE 316 CW2 FOR BOLT DIAMETERS 3/4 – INCHES AND GREATER IN DIAMETER.
6. NUT SHALL CONFORM TO ASTM F 594 GROUP 2, HEX, UNO.
7. WASHERS SHALL CONFORM TO ASTM A 240.
8. CONTRACTOR SHALL COORDINATE BOLT PROJECTION WITH EQUIPMENT MANUF.

BOLT DIA (IN)	"L" MIN (IN)	MIN WASHER THICKNESS (IN)
1/2	5	0.097
5/8	7	0.122
3/4	8	0.122
7/8	10	0.136
1	12	0.136
1 1/8	14	0.136
1 1/4	16	0.136

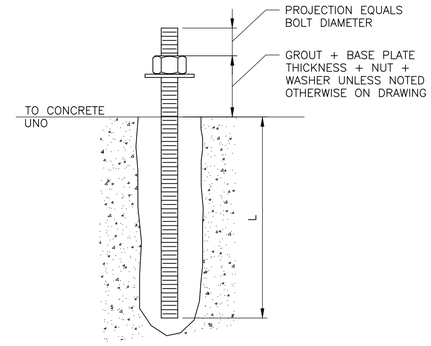

CARBON STEEL ADHESIVE ANCHOR BOLTS

DETAIL B
NTS –

BOLT DIA (IN)	"L" MIN (IN)	MIN WASHER THICKNESS (IN)
1/2	4.5	0.097
5/8	6.5	0.122
3/4	7.5	0.122
7/8	9.5	0.136
1	11	0.136
1 1/8	12.5	0.136
1 1/4	14.5	0.136

NOTES:

1. BOLT EDGE DISTANCE SHALL BE A MINIMUM OF 1.5 X L, UNO ON THE DRAWINGS. SMALLER EDGE DISTANCE SHALL BE APPROVED BY THE ENGINEER OF RECORD.
2. MINIMUM CENTER TO CENTER SPACING OF BOLTS SHALL BE 3 X L, UNO ON THE DRAWINGS. SMALLER BOLT SPACING SHALL BE APPROVED BY THE ENGINEER OF RECORD.
3. HOLES SHALL BE DRILLED USING A HAMMER DRILL CARBIDE BIT OR EQUAL.
4. PROVIDE 1 1/2" – INCHES NON–SHRINK GROUT UNDER BASE PLATE, UNO.
5. CONTRACTOR SHALL COORDINATE BOLT PROJECTION WITH ALUMINUM ROOF AND/OR EQUIPMENT MANUF.

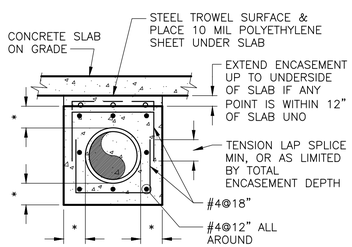

NOTES:

1. * = 8" MIN FOR PIPE ≤ 24"ø, 12" MIN FOR PIPE > 24"ø.
2. CONCRETE ENCASEMENT SHALL BE TERMINATED AT PIPE JOINTS ONLY.
3. SEE DETAIL D/– FOR LIMIT OF ENCASEMENT BEYOND EDGE OF BLDG / SLAB.
4. WHERE ENCASEMENT TERMINATES AT CONCRETE WALL OR SLAB PROVIDE MATCHING DOWEL TO LAP WITH LONGITUDINAL BARS.

PIPE ENCASEMENT

DETAIL C
NTS –

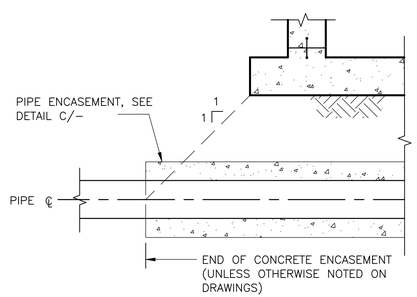

END OF PIPE ENCASEMENT UNDER STRUCTURES

DETAIL D
NTS –

STATE OF TEXAS
MAHNAZ MOSTAFAZADEH
147841
LICENSED
PROFESSIONAL ENGINEER
12/11/2023

REV. NO.	DATE	DRWN	CHKD	REMARKS

DESIGNED BY: E. RIVERA
DRAWN BY: J. GILEZAN
SHEET CHK'D BY: W. KIAHON
CROSS CHK'D BY: E. RIVERA
APPROVED BY: M. MOSTAFAZADEH
DATE: DECEMBER 2023

CDM Smith
8310-1 N Capital of Texas Hwy, Suite 250
Austin, TX 78731
Tel: (512) 346-1100
TBPELS Firm Registration No. F-3043

CITY OF GEORGETOWN, TEXAS

CEDAR BREAKS AND D B WOOD LIFT STATIONS

STRUCTURAL
STANDARD DETAILS III

PROJECT NO. 2048–272644
FILE NAME: SZ02NFDT.dwg
SHEET NO.
SD-3

© 2023 CDM SMITH ALL RIGHTS RESERVED.
REUSE OF DOCUMENTS: THESE DOCUMENTS AND DESIGNS PROVIDED BY PROFESSIONAL SERVICE, INCORPORATED HEREIN, ARE THE PROPERTY OF CDM SMITH AND ARE NOT TO BE USED, IN WHOLE OR PART, FOR ANY OTHER PROJECT WITHOUT THE WRITTEN AUTHORIZATION OF CDM SMITH.

Plotted: 12/12/2023 3:01:41 PM

PIPING SYMBOLS

DOUBLE LINE SYMBOL	SINGLE LINE SYMBOL	FEATURE
		WELDED JOINT
		BLIND FLANGE
SEE NOTE 2		FLANGED JOINT COMPLEX REPRESENTATION.
		MECHANICAL JOINT COMPLEX REPRESENTATION.
		PUSH ON JOINT OR CAULKED BELL & SPIGOT JOINT SIMPLIFIED REPRESENTATION
		PUSH ON JOINT OR CAULKED BELL & SPIGOT JOINT COMPLEX REPRESENTATION
		PUSH ON JOINT OR CAULKED BELL & SPIGOT JOINT RESTRAINED
		BALL JOINT
		DIRECTION OF FLOW
		PLAIN END x PLAIN END PIPE COUPLING
		PLAIN END x PLAIN END PIPE COUPLING RESTRAINED
		FLANGE x PLAIN END PIPE COUPLING
A B TYPE IDENTIFICATION REFER TO SPECS	A B	FLEXIBLE COUPLING OR EXPANSION JOINT (SLEEVE TYPE)
		FLEXIBLE COUPLING OR EXPANSION JOINT (BELLOWS TYPE)
F OR R		COUPLING FOR GROOVED END JOINTS: F FLEXIBLE R RIGID
		FLANGE GUARD
		FLANGE FILLER
		UNION
		QUICK CONNECT COUPLING
		HOSE COUPLING

PIPE AND FITTING SYMBOL NOTES

1 SIMPLIFIED JOINT SYMBOL IS USED FOR ALL SINGLE LINE PIPING SHOWN ON THE INTERIOR & EXTERIOR PIPING DRAWINGS.

2 UNLESS MODIFIED BY THE GENERAL PROJECT NOTES OR DETAILED ON THE LAYOUT AND SCHEMATIC DRAWINGS PIPE & FITTING JOINT REQUIREMENTS FOR THE VARIOUS PIPE MATERIALS ARE DEFINED IN THE SPECIFICATIONS.

EQUIPMENT / VALVE TAG

NOTE: ONLY NEW VALVES 4" OR LARGER WILL BE TAGGED.

SHFP–01

16"–PTW–GV–01

- EQUIPMENT CODE
- NUMERICAL INDICATOR UNIQUE NUMBER ASSIGNED TO EACH PIECE OF EQUIPMENT
- NUMERICAL INDICATOR UNIQUE NUMBER ASSIGNED TO EACH VALVE
- ABBREVIATION INDICATING TYPE OF VALVE, i.e. GATE
- PROCESS FLUID ABBREVIATION
- VALVE SIZE

PIPE TAG

(3) 2" PTW–PVC/F

- NUMERICAL INDICATOR FOR MULTIPLE IDENTICAL FLOWSTREAMS
- NOMINAL PIPE SIZE
- JOINT DESIGNATION SEE PIPE JOINT LEGEND
- PIPE MATERIAL SEE ABBREVIATIONS
- PROCESS FLUID ABBREVIATION SEE ABBREVIATIONS

DEPICTED ARE: THREE, 2" DIAMETER POLYVINYL CHLORIDE PIPES WITH FLANGED JOINTS SCHEDULED TO TRANSPORT PROTECTED WATER.

VALVE SYMBOLS

SYMBOL	FEATURE
	CAP OR PLUG
	UNCLASSIFIED. TYPE AS SHOWN ON THE DRAWINGS ADJACENT TO SYMBOL
	FLOW METER
V	TELESCOPING VALVE
	VALVE WITH HOSE END (FLUSHING CONNECTION)
	GATE VALVE
K	KNIFE GATE VALVE
	GLOBE VALVE
	BALL VALVE
	3–WAY BALL VALVE
	4–WAY BALL VALVE
	CONE VALVE
	NEEDLE VALVE
	PINCH VALVE
	DIAPHRAGM VALVE
	BUTTERFLY VALVE
BFD	BUTTERFLY VALVE DAMPER (AIR PIPING)
	PLUG VALVE
	CHECK VALVE, GENERAL SYMBOL
	BALL CHECK VALVE
	DOUBLE DOOR CHECK VALVE
	ANGLE VALVE
S	SOLENOID VALVE
S	THREE WAY SOLENOID VALVE
M	MOTOR OPERATED VALVE
	FLAP VALVE
	SHEAR GATE
	MUD VALVE
FD	FLOOR DRAIN
ED	EQUIPMENT DRAIN
	ECCENTRIC REDUCER OR REDUCING BUSHING
	CONCENTRIC REDUCER OR REDUCING BUSHING
	Y–STRAINER
	YARD HOSE STATION
	CALIBRATION CYLINDER
	AIR RELEASE VALVE
CO	CLEAN OUT
	DOWN
	UP
	DROP OR RISE
	PRESSURE RELIEF VALVE
	BALL VALVE – CHLORINE SERVICE
	VACUUM REGULATOR
	SELF–CONTAINED PRESSURE REGULATING VALVE
	BACK PRESSURE VALVE
	VACUUM RELIEF VALVE

VALVE SYMBOLS (CONTINUED)

SYMBOL	FEATURE
	SPRING RETURN BALL VALVE
	DIAPHRAGM SEAL STANDARD
	DIAPHRAGM SEAL SPECIAL SERVICE
	DIAPHRAGM CHECK VALVE

GATE SYMBOLS

PLAN	FEATURE
	SLUICE GATE (SG)
	SLIDE GATE (SLG)
	WEIR SLIDE GATE (WSLG)
	STOP PLATE (SP)

SECTION (OPERATOR ONLY)	FEATURE
	SLUICE GATE (SG)
	SLIDE GATE (SLG)
	WEIR SLIDE GATE (WSLG)

EQUIPMENT SYMBOLS FOR PROCESS MECHANICAL DIAGRAMS

SYMBOL	TYPE
	CENTRIFUGAL PUMP
PS	PRESSURE SWITCH
PI	PRESSURE GAUGE
VI	VACUUM GAUGE
FS	FLOW SWITCH/FLOW SENSOR
DPI	DIFFERENTIAL PRESSURE GAUGE
PIT	PRESSURE INDICATING TRANSMITTER
LE	LEVEL ELEMENT
LIT	LEVEL INDICATING TRANSMITTER
LS	LEVEL SWITCH
WT	WEIGHT TRANSMITTER
LSH	LEVEL SWITCH HIGH

PIPE JOINT LEGEND

DESIGNATION	PIPE JOINT
F	FLANGED
G	GROOVED
P	MECHANICAL JOINT

PIPE MATERIAL

CI	CAST IRON
CIS	CAST IRON – SOIL
CS	CARBON STEEL
DI	DUCTILE IRON
FRP	FIBER REINFORCED PLASTIC
GS	GALVANIZED CARBON STEEL
PVC	POLYVINYL CHLORIDE
SST	STAINLESS STEEL
STL	STEEL

PROCESS FLUID ABBREVIATIONS

EFF	EFFLUENT
INF	INFLUENT
SWR	SEWER LINE

EQUIPMENT IDENTIFICATION SYSTEM
EQUIPMENT CODES

ARV	AIR RELIEF VALVE
ARVV	AIR RELIEF/VACUUM
BCV	BALL CHECK VALVE
BFD	BUTTERFLY VALVE DAMPER
BFPV	BACK FLOW PREVENTER
CFG	CENTRIFUGE
CFP	CENTRIFUGE PUMPS
CV	CHECK VALVE
GV	GATE VALVE
PCV	PUMP CONTROL VALVE
PV	PLUG VALVE

NOTES

1. PIPE HANGERS SHALL BE PROVIDED IN ACCORDANCE WITH SECTION 15140 AND AS SHOWN ON DRAWINGS.
2. ALL PIPING INSTALLED BELOW A PROCESS STRUCTURE SHALL BE ENCASED IN ACCORDANCE WITH DETAIL C ON SHEET SZ–2 UNLESS NOTED OTHERWISE.

STATE OF TEXAS
GERALD S. FURRIER
129811
LICENSED PROFESSIONAL ENGINEER
12/11/2023

REV. NO.	DATE	DRWN	CHKD	REMARKS

DESIGNED BY: M. TESFAI
DRAWN BY: D. SNEHA
SHEET CHK'D BY: M. MAHADEVAN
CROSS CHK'D BY: M. TESFAI
APPROVED BY: G. FURRIER
DATE: DECEMBER 2023

CDM Smith
8310-1 N Capital of Texas Hwy, Suite 250
Austin, TX 78731
Tel: (512) 346-1100
TBPELS Firm Registration No. F-3043

CITY OF GEORGETOWN, TEXAS

CEDAR BREAKS AND D B WOOD LIFT STATIONS

MECHANICAL LEGEND

PROJECT NO. 2048–272644
FILE NAME: M001NFLG
SHEET NO. M-1

XREFs: [CDMS_2234_LS_Border] Images: []
Last saved by: RANUTHV Time: 11/1/2023 5:41:33 PM
pw:\\cdmsmith-ad2-pw.bentley.com:pw_pri\12049\272644\04 Design Services NM_50%\05 Process Mechanical\10 BIM_CADD\M001NFLG.dwg
© 2023 CDM SMITH ALL RIGHTS RESERVED.
REUSE OF DOCUMENTS: THESE DOCUMENTS AND DESIGNS PROVIDED BY PROFESSIONAL SERVICE, INCORPORATED HEREIN, ARE THE PROPERTY OF CDM SMITH AND ARE NOT TO BE USED, IN WHOLE OR PART, FOR ANY OTHER PROJECT WITHOUT THE WRITTEN AUTHORIZATION OF CDM SMITH.

Plotted: 12/13/2023 6:33:50 PM

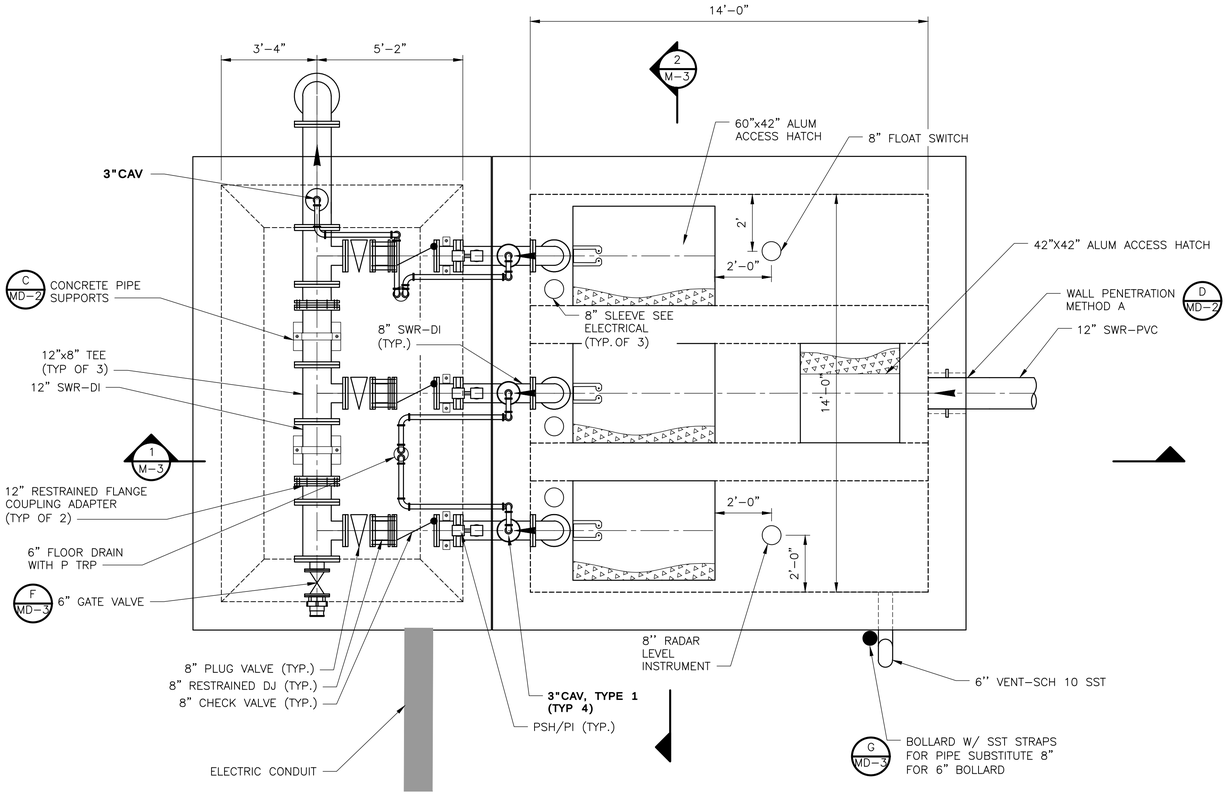

UPPER PLAN @ 810.00

PLAN

3/8" = 1'-0"

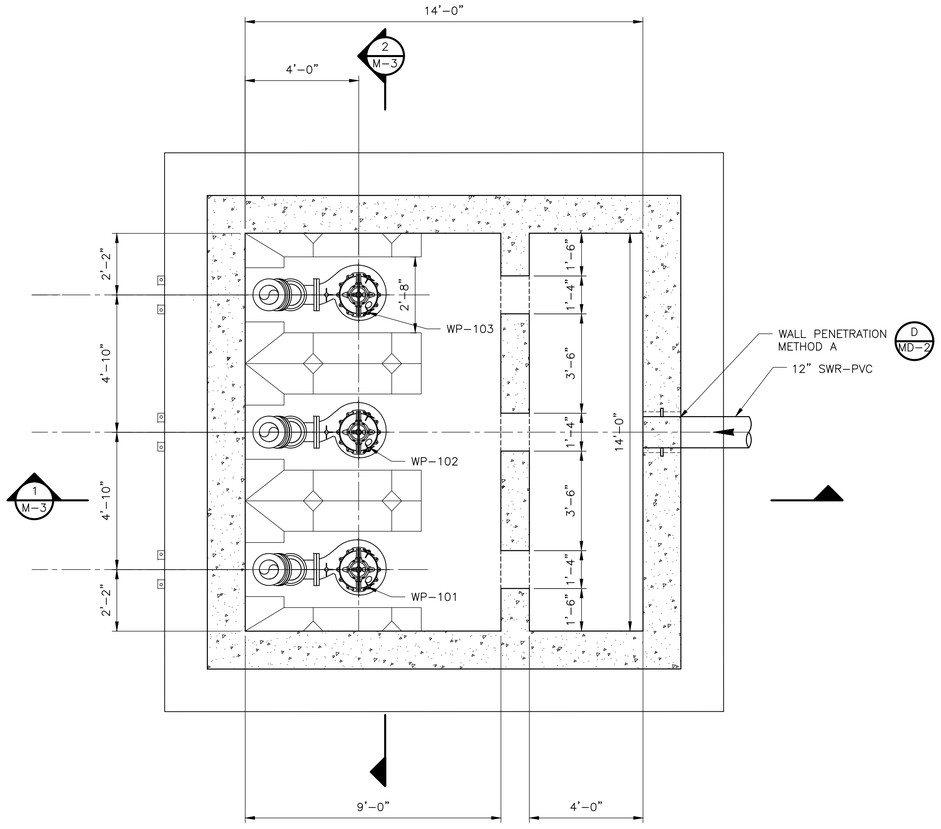

LOWER PLAN @ 797.00

PLAN

3/8" = 1'-0"

3/8" = 1'-0"

NOTE:

1. PROTECTIVE LINNING SHALL BE INSTALLED IN WET WELL. REFER TO STRUCTURAL SHEETS.

STATE OF TEXAS
GERALD S. FURRIER
129811
LICENSED
PROFESSIONAL ENGINEER
12/11/2023

REV. NO.	DATE	DRWN	CHKD	REMARKS

DESIGNED BY: M. TESFAI
DRAWN BY: T SRINIVASAN
SHEET CHK'D BY: M. MAHADEVAN
CROSS CHK'D BY: M. TESFAI
APPROVED BY: G. FURRIER
DATE: DECEMBER 2023

CDM Smith
8310-1 N Capital of Texas Hwy, Suite 250
Austin, TX 78731
Tel: (512) 346-1100
TBPELS Firm Registration No. F-3043

CITY OF GEORGETOWN, TEXAS

CEDAR BREAKS AND D B WOOD LIFT STATIONS

MECHANICAL
CEDAR BREAKS LIFT STATION
UPPER PLAN AND LOWER PLAN

PROJECT NO. 2048-272644
FILE NAME: M002LSPS.dwg

SHEET NO.
M-2

Plotted: 12/14/2023 8:45:26 PM

xREFs: [CDMS_2234_South lake to South fork_Border, MWP001LS, SWS001LS, SWP000LS, SWP001LS, EWP001ST] Images: []
Last saved by: MAHADEVANM, Time: 12/14/2023 7:55:57 PM
pw:\\cdmsmith-az02-pw.bentley.com:pw_pw1\20482\272644\04 Design Services NM_50%\05 Process Mechanical\10 BIM_CAD\DM002LSPS.dwg
© 2023 CDM SMITH ALL RIGHTS RESERVED
REUSE OF DOCUMENTS: THESE DOCUMENTS AND DESIGNS PROVIDED BY PROFESSIONAL SERVICE, INCORPORATED HEREIN, ARE THE PROPERTY OF CDM SMITH AND ARE NOT TO BE USED, IN WHOLE OR PART, FOR ANY OTHER PROJECT WITHOUT THE WRITTEN AUTHORIZATION OF CDM SMITH.

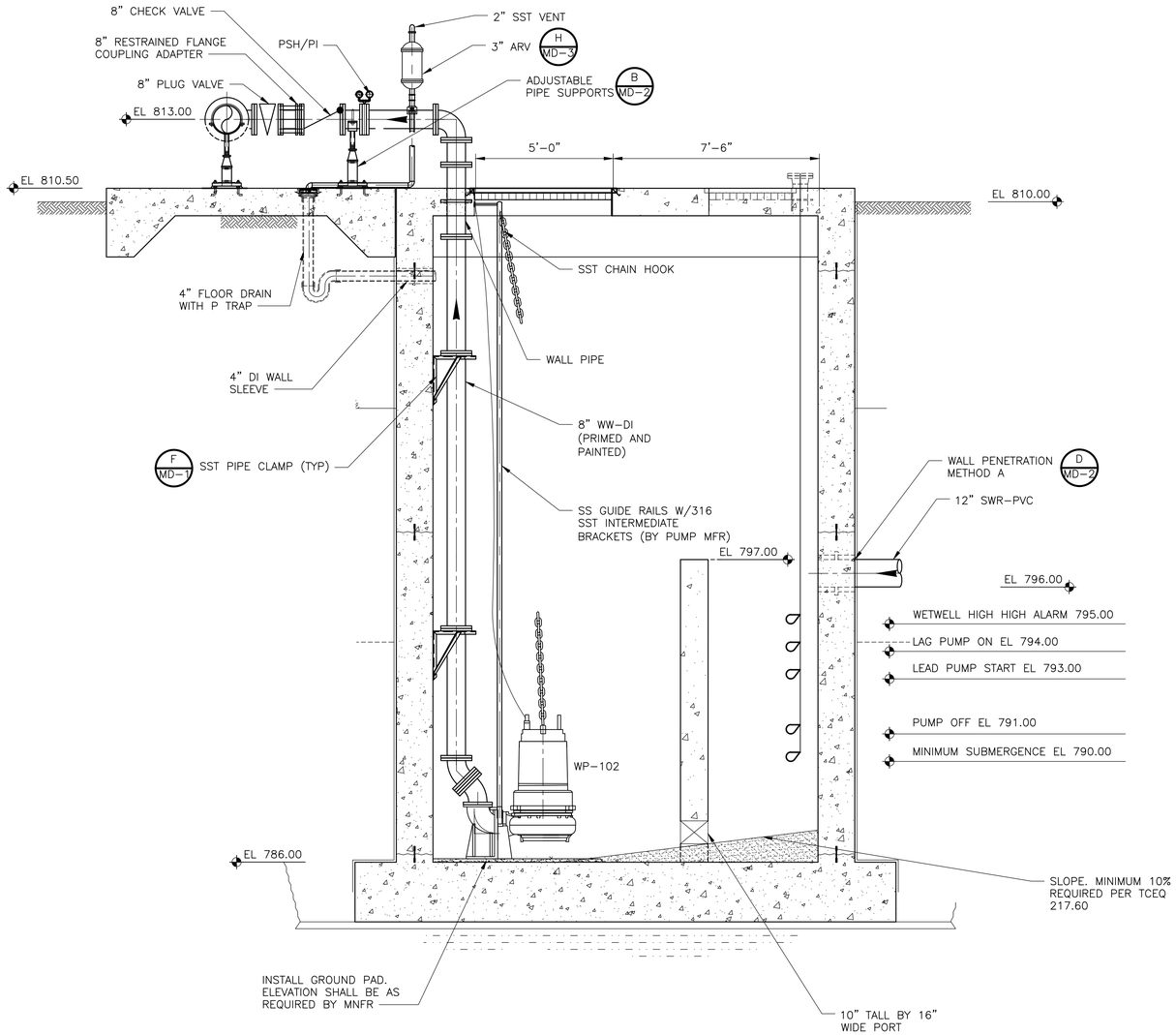

SECTION 1 / M-2
3/8" = 1'-0"

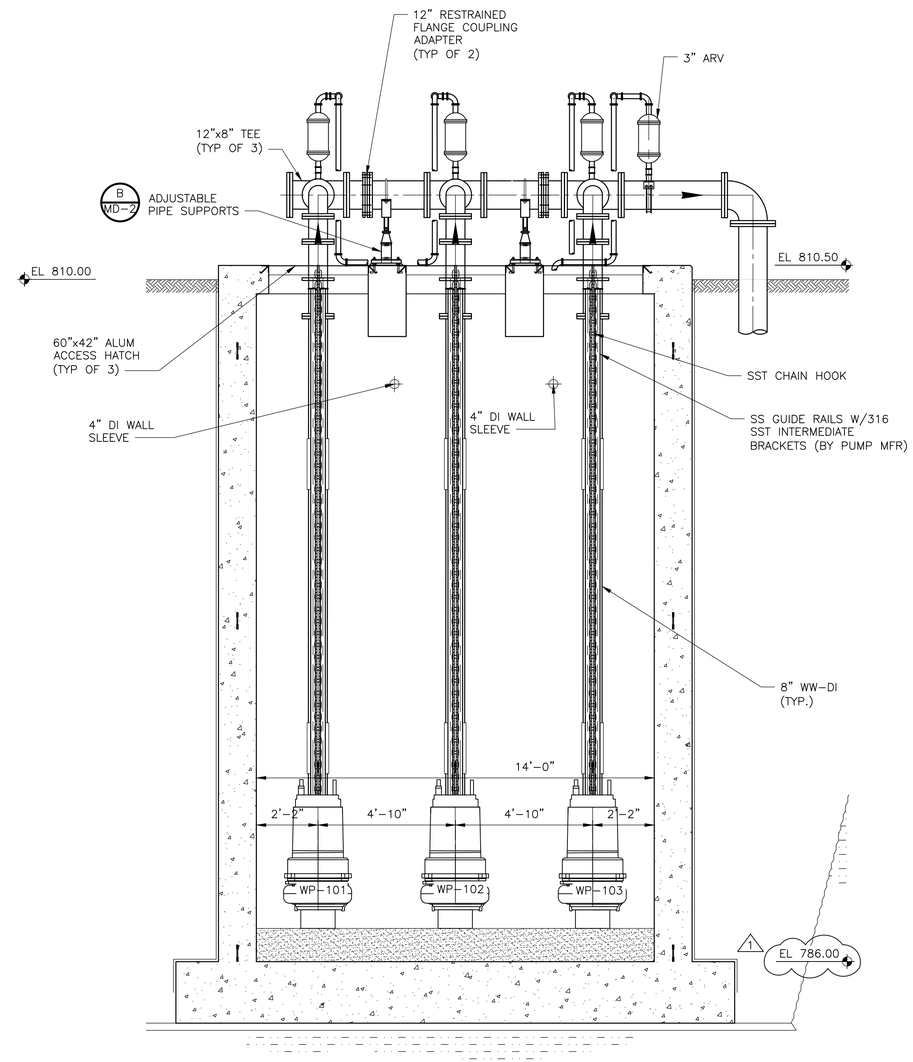

SECTION 2 / M-2
3/8" = 1'-0"

NOTE:

1. CONTRACTOR SHALL COORDINATE ATTACHMENT OF GUIDERAIL WITH THE HATCH DOOR (FLOOR DOOR) APPROVED SUBMITTAL AND THE HIGH-PERFORMANCE CONCRETE COATING SYSTEM. ENSURE THAT ATTACHMENT BOLTS ARE NO LESS THAN 3.5" FROM A CONCRETE EDGE AND THAT THE ANCHORS ARE PROPERLY SEALED PER COATING MANUFACTURER REQUIREMENTS. SUBMIT PROPOSED ATTACHMENT LOCATION AND METHOD TO ENGINEER FOR REVIEW PRIO TO FABRICATION AND PURCHASE OF ATTACHMENT.

3/8" = 1'- 0"
2 0 2 4

STATE OF TEXAS
GERALD S. FURRIER
129811
LICENSED PROFESSIONAL ENGINEER
12/11/2023

REV. NO.	DATE	DRWN	CHKD	REMARKS
1	1/9/24	MT	GF	REVISED ELEVATION.

DESIGNED BY: M. TESFAI
DRAWN BY: T SRINIVASAN
SHEET CHK'D BY: M. MAHADEVAN
CROSS CHK'D BY: M. TESFAI
APPROVED BY: G. FURRIER
DATE: DECEMBER 2023

CDM Smith
8310-1 N Capital of Texas Hwy, Suite 250
Austin, TX 78731
Tel: (512) 346-1100
TBPELS Firm Registration No. F-3043

CITY OF GEORGETOWN, TEXAS
CEDAR BREAKS AND D B WOOD LIFT STATIONS

MECHANICAL
CEDAR BREAKS LIFT STATION
SECTIONS

PROJECT NO. 2048-272644
FILE NAME: M003LSPS.dwg
SHEET NO.
M-3

XREFs: [CDMS_2234_South lake to South fork_Border, MWP001LS, SWP000LS, SWP001LS, SWS001LS] Images: []
Last saved by: MAHADEVANM Time: 12/14/2023 9:04:12 PM
pw:\\cdmsmith-az02-pw.bentley.com:pw_pl1\2048\272644\04 Design Services NM_50%\05 Process Mechanical\10 BIM_CADD\M003LSPS.dwg
© 2023 CDM SMITH ALL RIGHTS RESERVED.
REUSE OF DOCUMENTS: THESE DOCUMENTS AND DESIGNS PROVIDED BY PROFESSIONAL SERVICE, INCORPORATED HEREIN, ARE THE PROPERTY OF CDM SMITH AND ARE NOT TO BE USED, IN WHOLE OR PART, FOR ANY OTHER PROJECT WITHOUT THE WRITTEN AUTHORIZATION OF CDM SMITH.

Plotted: 4/26/2024 11:18:07 AM

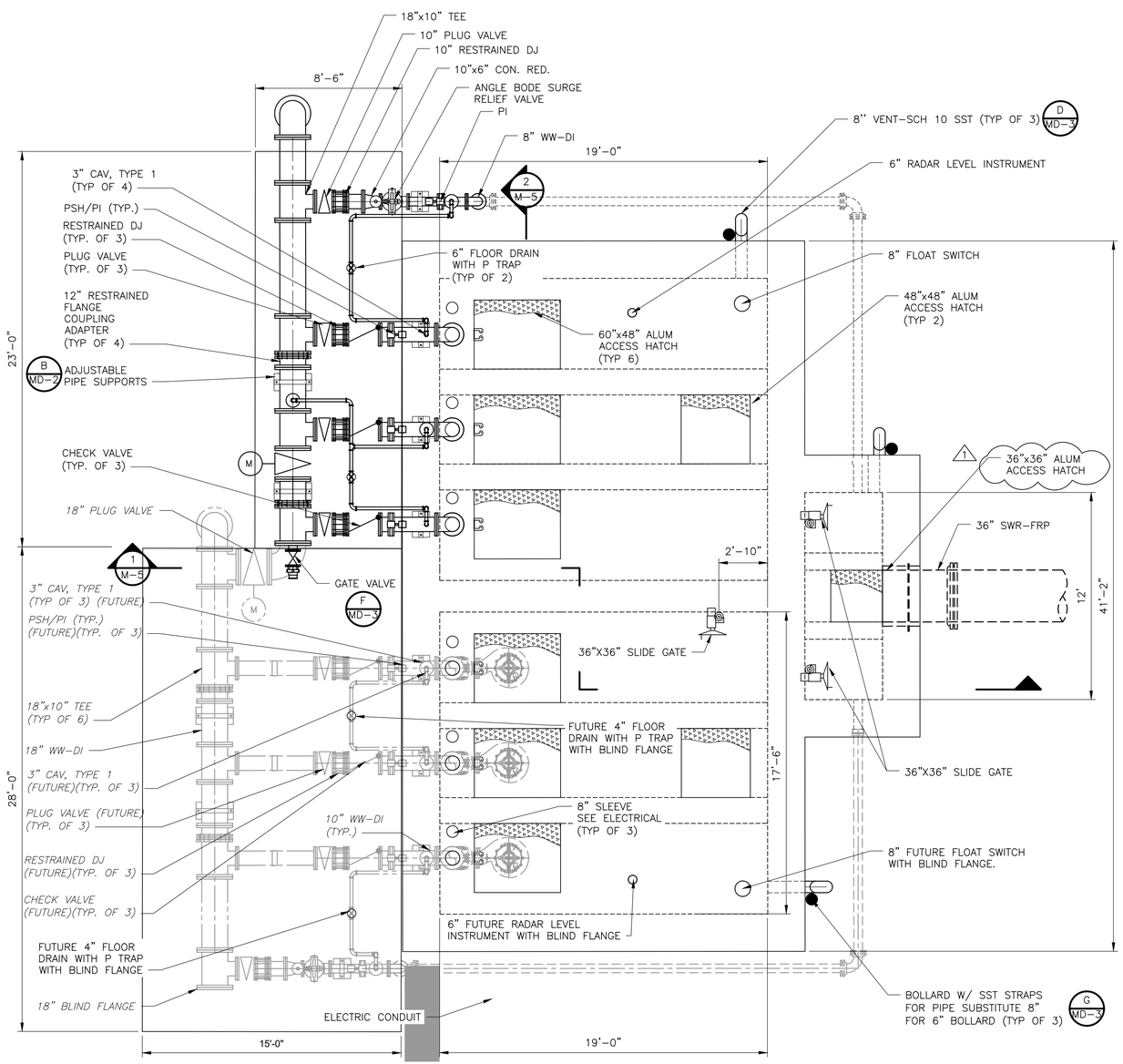

UPPER PLAN @ 767.50

PLAN

1/4" = 1'-0"

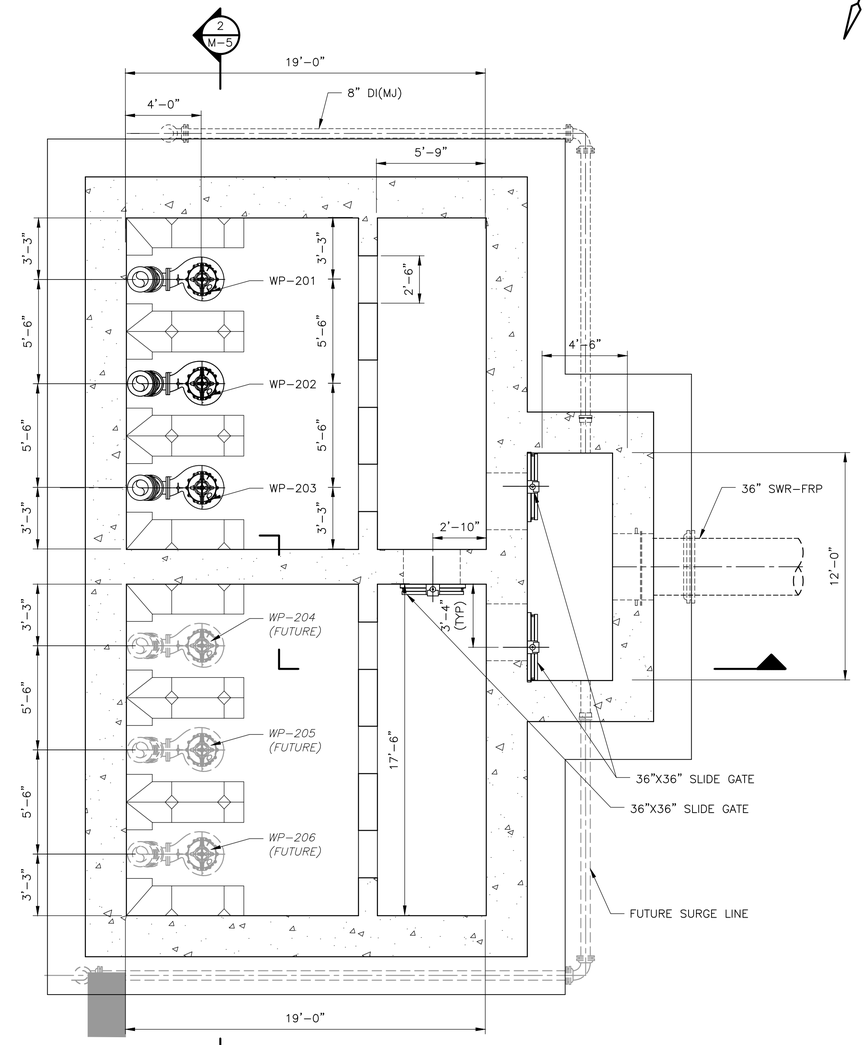

LOWER PLAN @ 742.00

PLAN

1/4" = 1'-0"

NOTE:

1. PROTECTIVE LINNING SHALL BE INSTALLED IN WET WELL. REFER TO STRUCTURAL SHEETS.

STATE OF TEXAS
GERALD S. FURRIER
129811
LICENSED PROFESSIONAL ENGINEER
12/11/2023

REV. NO.	DATE	DRWN	CHKD	REMARKS
1	1/9/24	MT	GF	REVISED ACCESS HATCH MATERIAL

DESIGNED BY: M. TESFAI
DRAWN BY: T SRINIVASAN
SHEET CHK'D BY: M. MAHADEVAN
CROSS CHK'D BY: M. TESFAI
APPROVED BY: G. FURRIER
DATE: DECEMBER 2023

CDM Smith
8310-1 N Capital of Texas Hwy, Suite 250
Austin, TX 78731
Tel: (512) 346-1100
TBPELS Firm Registration No. F-3043

CITY OF GEORGETOWN, TEXAS

CEDAR BREAKS AND D B WOOD LIFT STATIONS

MECHANICAL
D B WOOD LIFT STATION
UPPER PLAN AND LOWER PLAN

PROJECT NO. 2048-272644
FILE NAME: M004LSPL.dwg
SHEET NO.
M-4

Plotted: 4/26/2024 11:12:26 AM

XREFs: [CDMS_2234_South lake to South fork_Border; MWP002LS, SWS002LS, SWP004LS, SWP002LS, EWP002ST] Images: []
Last saved by LIZ2, Time: 12/14/2023 3:35:13 PM
C:\pw_pr\liz2cd\15\969\M004LSPL.dwg
© 2023 CDM SMITH ALL RIGHTS RESERVED.
REUSE OF DOCUMENTS: THESE DOCUMENTS AND DESIGNS PROVIDED BY PROFESSIONAL SERVICE, INCORPORATED HEREIN, ARE THE PROPERTY OF CDM SMITH AND ARE NOT TO BE USED, IN WHOLE OR PART, FOR ANY OTHER PROJECT WITHOUT THE WRITTEN AUTHORIZATION OF CDM SMITH.

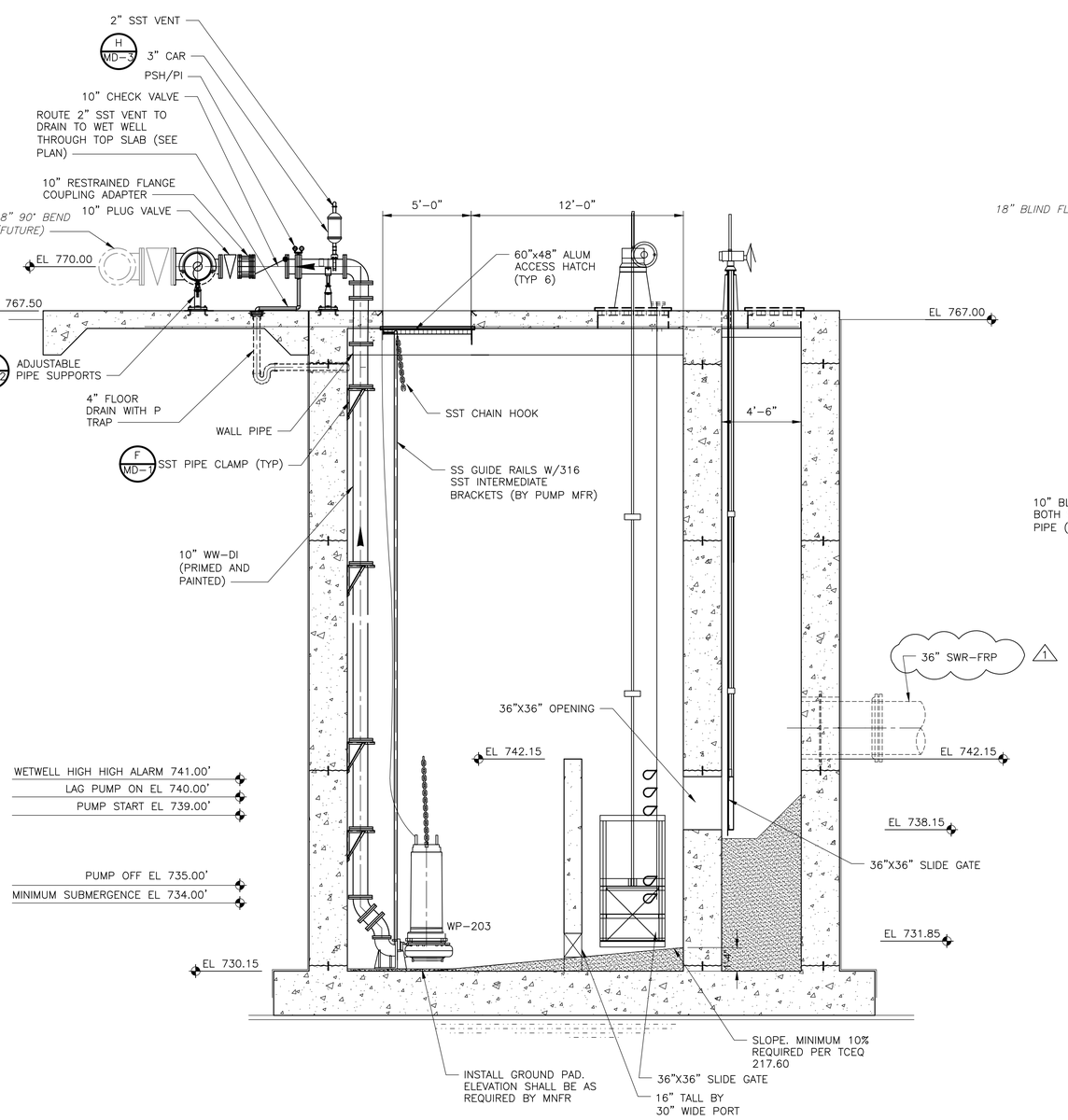

SECTION 1 / M-4
1/4" = 1'-0"

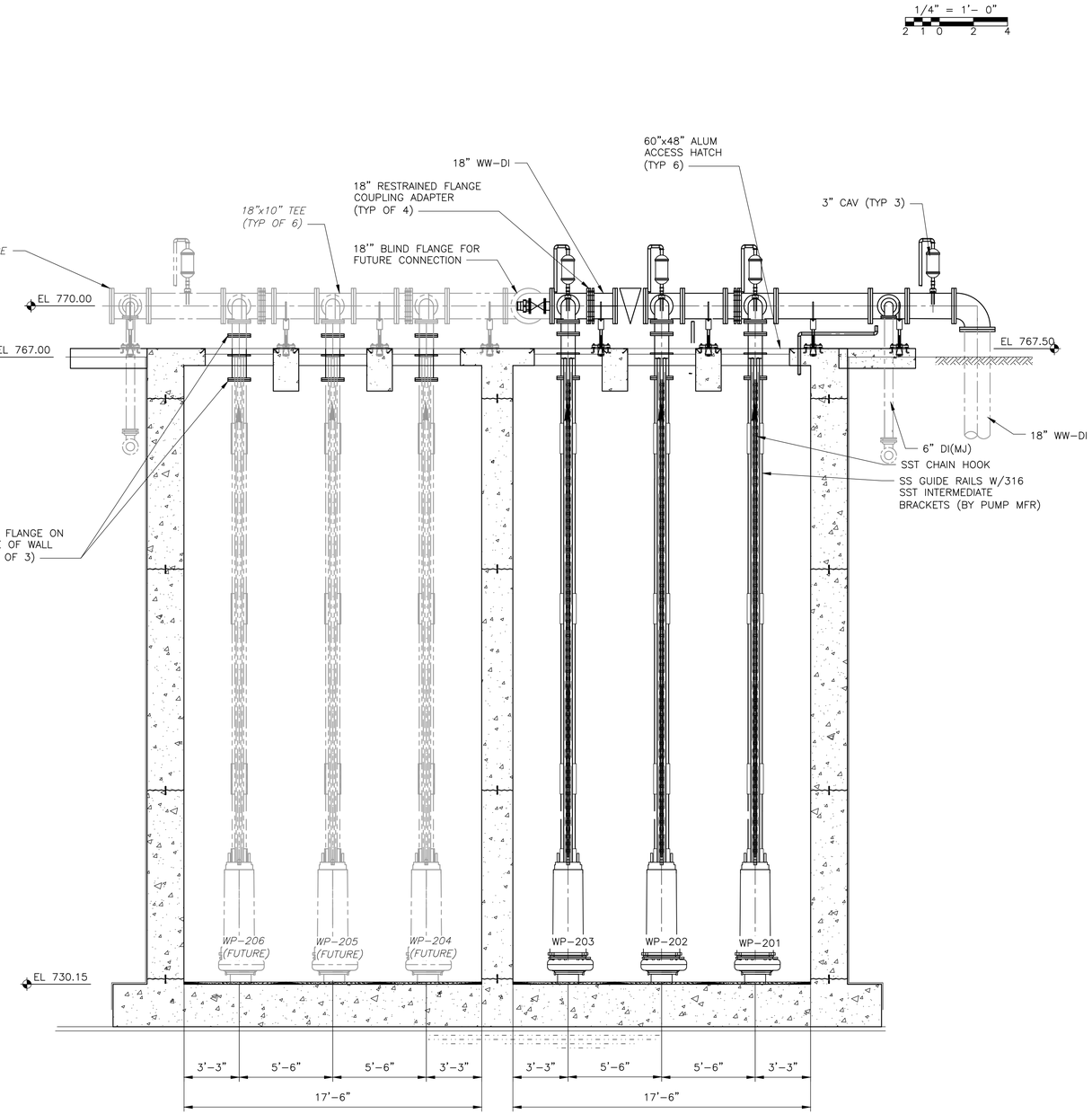

SECTION 2 / M-4
1/4" = 1'-0"

NOTES:

1. PROTECTIVE LINING SHALL BE INSTALLED IN WET WELL. REFER TO STRUCTURAL SHEETS.
2. CONTRACTOR SHALL COORDINATE ATTACHMENT OF GUIDERAIL WITH THE HATCH DOOR (FLOOR DOOR) APPROVED SUBMITTAL AND THE HIGH-PERFORMANCE CONCRETE COATING SYSTEM. ENSURE THAT ATTACHMENT BOLTS ARE NO LESS THAN 3.5" FROM A CONCRETE EDGE AND THAT THE ANCHORS ARE PROPERLY SEALED PER COATING MANUFACTURER REQUIREMENTS. SUBMIT PROPOSED ATTACHMENT LOCATION AND METHOD TO ENGINEER FOR REVIEW PRIO TO FABRICATION AND PURCHASE OF ATTACHMENT.

STATE OF TEXAS
GERALD S. FURRIER
129811
LICENSED PROFESSIONAL ENGINEER
12/11/2023

REV. NO.	DATE	DRWN	CHKD	REMARKS
1	1/9/24	MT	GF	REVISED PIPE MATERIAL

DESIGNED BY: M. TESFAI
DRAWN BY: T SRINIVASAN
SHEET CHK'D BY: M. MAHADEVAN
CROSS CHK'D BY: M. TESFAI
APPROVED BY: G. FURRIER
DATE: DECEMBER 2023

CDM Smith
8310-1 N Capital of Texas Hwy, Suite 250
Austin, TX 78731
Tel: (512) 346-1100
TBPELS Firm Registration No. F-3043

CITY OF GEORGETOWN, TEXAS
CEDAR BREAKS AND D B WOOD LIFT STATIONS

MECHANICAL
D B WOOD LIFT STATION
SECTIONS

PROJECT NO. 2048-272644
FILE NAME: M005LSSC.dwg
SHEET NO.
M-5

90% DESIGN - NOT FOR CONSTRUCTION

XREFs: [CDMS_2234_South_lake_to_South_fork_Border_PP, MWP002LS, SWP002LS, SWS002LS, SWP004LS] Images: []
Last saved by: KAJALEAN Time: 4/26/2024 11:02:57 AM
C:\pw_pl1\kajalean\d3151969\M005LSSC.dwg
© 2022 CDM SMITH ALL RIGHTS RESERVED.
REUSE OF DOCUMENTS: THESE DOCUMENTS AND DESIGNS PROVIDED BY PROFESSIONAL SERVICE, INCORPORATED HEREIN, ARE THE PROPERTY OF CDM SMITH AND ARE NOT TO BE USED, IN WHOLE OR PART, FOR ANY OTHER PROJECT WITHOUT THE WRITTEN AUTHORIZATION OF CDM SMITH.

Plotted: 4/26/2024 11:07:29 AM

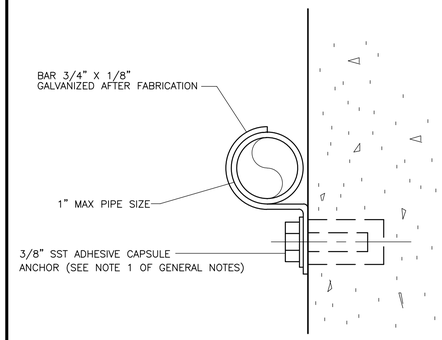

NOTES

1 WHERE SUBMERGED OR LOCATED ON OR ABOVE TOP OF WALL OF HYDRAULIC STRUCTURE, PIPE CLAMP, WASHER AND SHIELD SHALL BE TYPE 316 STAINLESS STEEL.

2 WHEN USED WITH PVC OR FIBERGLASS PIPE, PROVIDE STEEL SHIELD AROUND PIPE AT CLAMP WITH LOOSE FIT. WRAP COPPER TUBES WITH 2" WIDE STRIP OF RUBBER FABRIC.

3 WHERE SUBMERGED, STRAP, EXPANSION BOLT, NUT & WASHER SHALL BE TYPE 316 STAINLESS STEEL.

PIPE CLAMP FOR INDIVIDUAL PIPES

DETAIL A
NTS

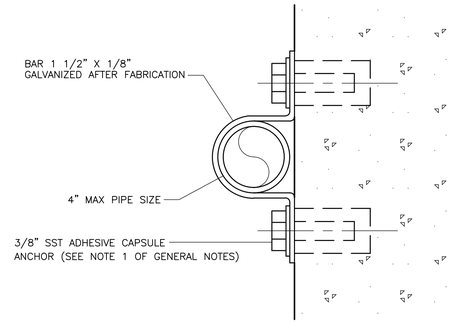

NOTES

1 WHERE SUBMERGED OR LOCATED ON OR ABOVE TOP OF WALL OF HYDRAULIC STRUCTURE, PIPE CLAMP, WASHER AND SHIELD SHALL BE TYPE 316 STAINLESS STEEL.

2 WHEN USED WITH PVC OR FIBERGLASS PIPE, PROVIDE STEEL SHIELD AROUND PIPE AT CLAMP WITH LOOSE FIT. WRAP COPPER TUBES WITH 2" WIDE STRIP OF RUBBER FABRIC.

PIPE CLAMP FOR INDIVIDUAL PIPES

DETAIL B
NTS

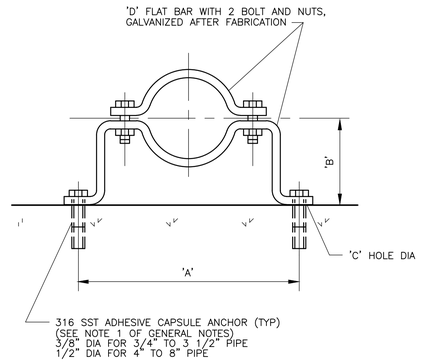

DIMENSIONS IN INCHES					
PIPE DIA	'A'	'B' SEE NOTE 3 BELOW	'C' HOLE DIA	'D' FLAT BAR SIZE	LOAD RATING LBS*
3/4	5 15/16	2 1/2	7/16	3/16 X 1 1/4	300
1	6 1/4	2 5/8	7/16	3/16 X 1 1/4	300
1 1/4	6 11/16	2 3/4	7/16	3/16 X 1 1/4	300
1 1/2	6 15/16	3	7/16	3/16 X 1 1/4	300
2	8 5/16	3 3/16	7/16	1/4 X 1 1/4	500
2 1/2	8 7/8	3 7/16	7/16	1/4 X 1 1/4	500
3	9 1/8	3 3/4	7/16	1/4 X 1 1/4	500
3 1/2	10 1/16	4	7/16	1/4 X 1 1/4	500
4	10 9/16	4 1/4	9/16	1/4 X 1 1/2	600
5	11 3/4	4 3/4	9/16	1/4 X 1 1/2	600
6	14 3/8	5 5/16	9/16	3/8 X 1 1/2	850
8	16 5/8	6 5/16	9/16	3/8 X 1 1/2	850

* SAFETY FACTOR OF 5

NOTES

1 WHERE SUBMERGED OR LOCATED ON OR ABOVE TOP OF WALL OF HYDRAULIC STRUCTURE, PIPE CLAMP, WASHER AND SHIELD SHALL BE TYPE 316 STAINLESS STEEL.

2 WHEN USED WITH PVC OR FIBERGLASS PIPE PROVIDE STEEL SHIELD AROUND PIPE AT CLAMP, WITH LOOSE FIT. WRAP COPPER TUBES WITH 2" STRIP OF RUBBER FABRIC.

3 FOR FLANGED PIPING INCREASE 'B' DIMENSION AS REQUIRED.

PIPE CLAMP FOR INDIVIDUAL PIPES

DETAIL C
NTS

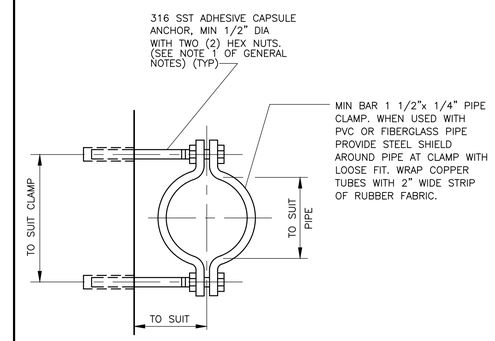

NOTE

1 GALVANIZE ALL PARTS AFTER FABRICATION. WHERE SUBMERGED OR LOCATED ON OR ABOVE TOP OF WALL OF HYDRAULIC STRUCTURE, PIPE CLAMP, WASHER AND SHIELD SHALL BE TYPE 316 STAINLESS STEEL.

PIPE CLAMP FOR INDIVIDUAL PIPES

DETAIL D
NTS

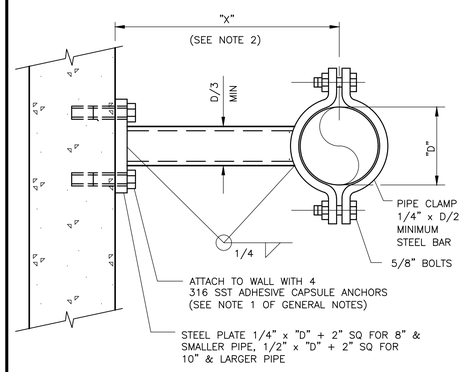

PLAN

NOTES

1 SWAY BRACE SHALL NOT SUPPORT VERTICAL LOADS.

2 FOR USE WHEN "X" IS GREATER THAN 12". FOR "X" 12" OR LESS, USE DETAIL AD OR AS OTHERWISE NOTED.

3 SWAY BRACES SHALL BE HOT DIP GALVANIZED AFTER FABRICATION. WHERE SUBMERGED OR LOCATED ON OR ABOVE TOP OF WALL OF HYDRAULIC STRUCTURE, PIPE SWAY BRACE ASSEMBLY SHALL BE TYPE 316 STAINLESS STEEL.

VERTICAL PIPE SWAY BRACE

DETAIL E
NTS

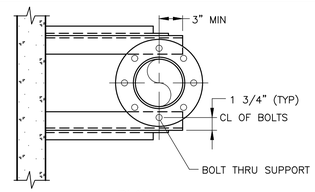

PLAN

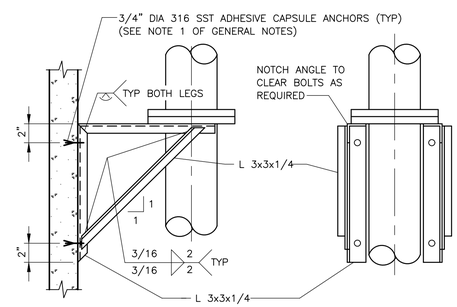

SECTION ELEVATION

NOTES

1 FOR 4" AND LARGER PIPE.

2 SUPPORT SHALL BE 316 STAINLESS STEEL. WHERE SUBMERGED OR LOCATED OVER WATER, PIPE BRACKET ASSEMBLY & BOLTS SHALL BE 316 SST.

3 MAXIMUM VERTICAL LOAD EQUALS 900 POUNDS.

4 FOR PIPE WITH JOINT TYPE OTHER THAN FLANGED, WELD SINGLE SLIP-ON TYPE FLANGE TO PIPE AT LOCATION OF EACH SUPPORT.

5 PIPE BRACKET ASSEMBLY & BOLTS SHALL BE TYPE 316 SST WHEN USED FOR SUPPORT OF SST PIPING.

PIPE SUPPORT

DETAIL F
NTS

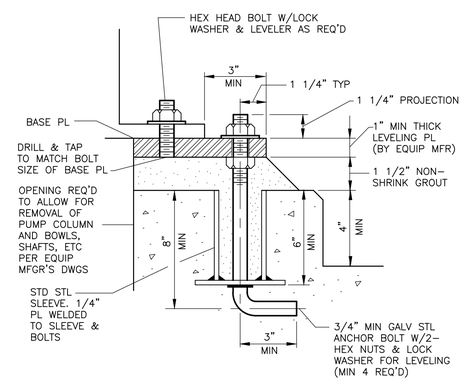

EQUIPMENT MOUNTING BASE

DETAIL G
NTS

GENERAL NOTES (TYPICAL FOR ALL STANDARD MECHANICAL DETAIL SHTS)

1. STAINLESS STEEL ADHESIVE CAPSULE ANCHORS SHALL BE A TWO-PART STUD AND CAPSULE RESIN ANCHORING SYSTEM. CAPSULES SHALL BE SELF-CONTAINED. SEALED GLASS UNITS CONTAINING PREMEASURED AMOUNTS OF RESIN, AGGREGATES, AND HARDENER. STUD ASSEMBLIES SHALL BE ALL-THREAD ANCHOR ROD WITH NUT AND WASHER. INSTALL ANCHOR IN FULL COMPLIANCE WITH THE MANUFACTURERS' RECOMMENDATIONS. ANCHORS SHALL BE HILTI "HVA ADHESIVE ANCHOR", MOLLY "PARABOUND CAPSULE ANCHOR", OR EQUAL. PROVIDE MINIMUM EMBEDMENT OF 10 BOLT DIAMETERS IN CONC.

2. ALL PIPE FRAMING SUPPORTS, PIPE CLAMPS, INTERMEDIATE SUPPORTS, POST SUPPORTS, Z FITTINGS, PIPE SHIELDS, ETC FOR CHEMICAL FEED SYSTEMS LOCATED ON OR ADJACENT TO CHEMICAL EQUIPMENT PADS OR LOCATED IN CHEMICAL PIPE TRENCHES, SUMPS, OR SECONDARY CONTAINMENT STRUCTURES SHALL BE CONSTRUCTED OF MATERIALS THAT ARE COMPATIBLE WITH PROCESS FLUID.

REV. NO.	DATE	DRWN	CHKD	REMARKS

DESIGNED BY: M. TESFAI
DRAWN BY: D. SNEHA
SHEET CHK'D BY: M. MAHADEVAN
CROSS CHK'D BY: M. TESFAI
APPROVED BY: G. FURRIER
DATE: DECEMBER 2023

CDM Smith
8310-1 N Capital of Texas Hwy, Suite 250
Austin, TX 78731
Tel: (512) 346-1100
TBPELS Firm Registration No. F-3043

CITY OF GEORGETOWN, TEXAS

CEDAR BREAKS AND D B WOOD LIFT STATIONS

MECHANICAL STANDARD DETAILS I

PROJECT NO. 2048-272644
FILE NAME: MZ-1
SHEET NO.
MD-1

XREFs: [CDMS_2234_South lake to South fork_Border] Images: []
Last saved by: RAAJITHV Time: 11/1/2023 5:48:06 PM
pw:\\cdmsmith-az02-pw.bentley.com:pw_pw1\204827\264\04 Design Services NM_50%\05 Process Mechanical\10 BIM_CADD\02 Details\M001STDT.dwg
© 2023 CDM SMITH ALL RIGHTS RESERVED.
REUSE OF DOCUMENTS: THESE DOCUMENTS AND DESIGNS PROVIDED BY PROFESSIONAL SERVICE, INCORPORATED HEREIN, ARE THE PROPERTY OF CDM SMITH AND ARE NOT TO BE USED, IN WHOLE OR PART, FOR ANY OTHER PROJECT WITHOUT THE WRITTEN AUTHORIZATION OF CDM SMITH.
Plotted: 12/13/2023 8:30:07 PM

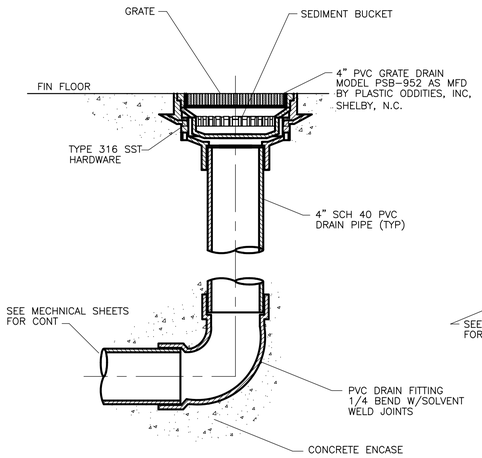

FLOOR DRAIN WITHOUT P-TRAP

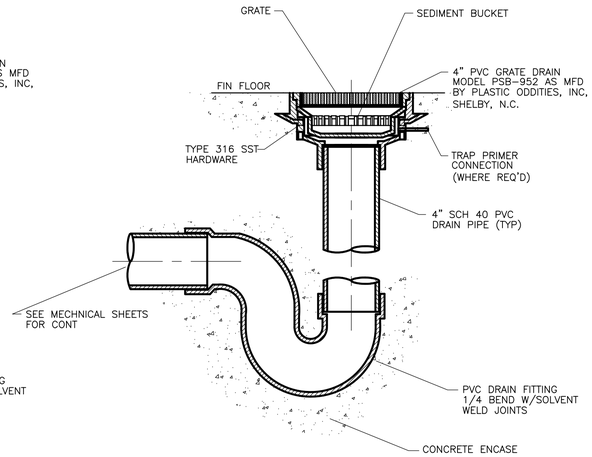

FLOOR DRAIN WITH P-TRAP

NOTES

1 PROVIDE FLOOR DRAIN W/P-TRAP ONLY WHERE REQUIRED ON DRAWINGS.

2 ALL PIPE AND FITTING CONNECTIONS SHALL BE SOLVENT WELDED IN ACCORDANCE WITH SECTION 15064.

DETAIL A
NTS

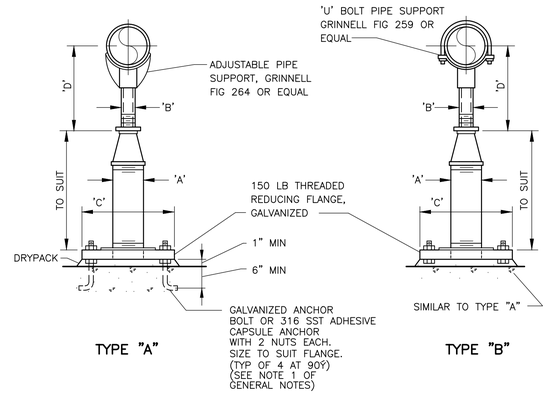

TYPE "A" TYPE "B"

ADJUSTABLE PIPE SUPPORT

DETAIL B
NTS

ADJUSTABLE PIPE SUPPORT APPROX DIMENSIONS IN INCHES					
PIPE SIZE	A	B	C	D MIN	D MAX
2 1/2	2 1/2	1 1/2	9	8	11 1/2
3	2 1/2	1 1/2	9	8 1/4	11 3/4
3 /12	2 1/2	1 1/2	9	8 1/2	12
4	3	2 1/2	9	10 1/4	14
6	3	2 1/2	9	11 5/8	15 1/4
8	3	2 1/2	9	13 5/8	16 1/2
10	3	2 1/2	9	14 5/8	18 1/4
12	3	2 1/2	9	15 5/8	19 3/4
14	4	3	11	18 7/8	20 3/4
16	4	3	11	19 7/8	22 1/4
18	6	3 1/2	13 1/2	21 1/4	24
20	6	3 1/2	13 1/2	23 1/4	25 1/2
24	6	4	13 1/2	26 1/2	28 1/4
30	6	4	13 1/2	29 5/8	31 1/2
32	6	4	13 1/2	30 5/8	32 3/4
36	6	4	13 1/2	32 5/8	34 3/4

NOTE

1 UNDER VALVES, METERS OR OTHER SPECIAL APPURTENANCES, A FABRICATED SUPPORT PIECE MAY BE UTILIZED AS ACCEPTABLE TO ENGINEER.

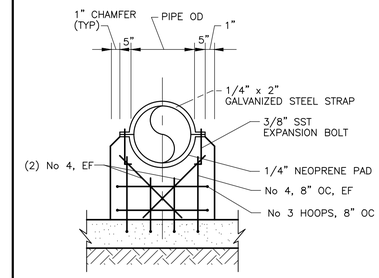

CONCRETE PIPE SUPPORT REACTION TYPE

DETAIL C
NTS

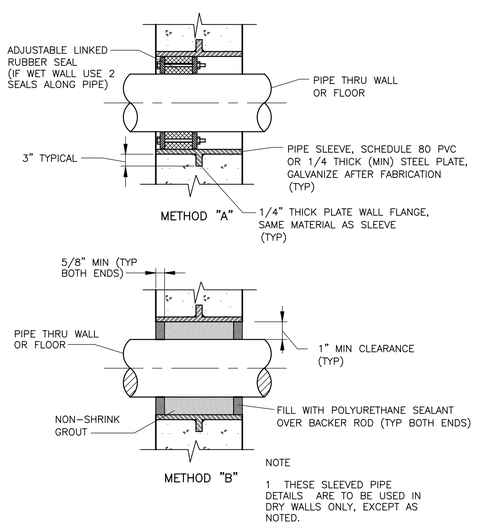

NOTE

1 THESE SLEEVED PIPE DETAILS ARE TO BE USED IN DRY WALLS ONLY, EXCEPT AS NOTED.

WALL PENETRATION IN NEW WALL

DETAIL D
NTS

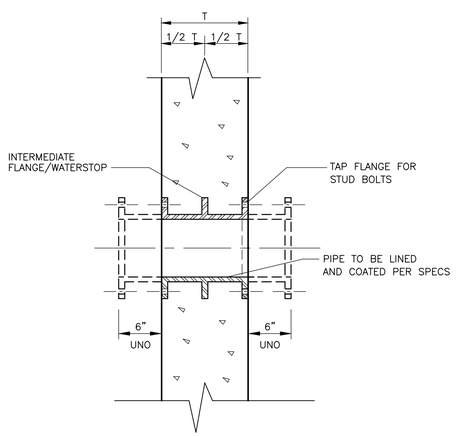

DI FxFxF WALL PIPE IN NEW WALL

DETAIL E
NTS

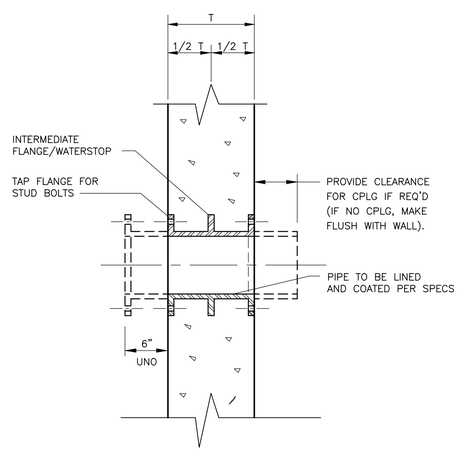

DI FxFxPE WALL PIPE IN NEW WALL

DETAIL F
NTS

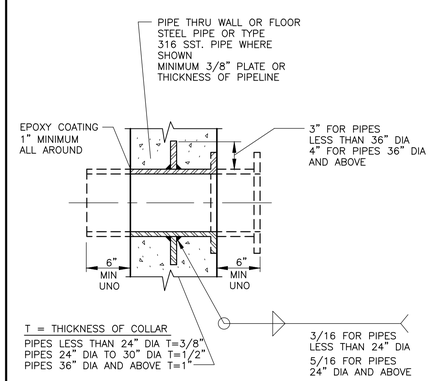

STEEL FLANGE X PLAIN END WALL PIPE

DETAIL G
NTS

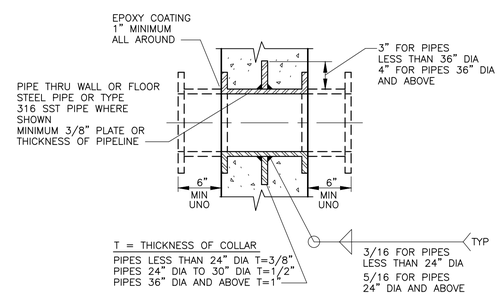

STEEL F X F X F WALL PIPE

DETAIL H
NTS

STATE OF TEXAS
GERALD S. FURRIER
129811
LICENSED
PROFESSIONAL ENGINEER
12/11/2023

REV. NO.	DATE	DRWN	CHKD	REMARKS

DESIGNED BY: M. TESFAI
DRAWN BY: D. SNEHA
SHEET CHK'D BY: M. MAHADEVAN
CROSS CHK'D BY: M. TESFAI
APPROVED BY: G. FURRIER
DATE: DECEMBER 2023

CDM Smith
8310-1 N Capital of Texas Hwy, Suite 250
Austin, TX 78731
Tel: (512) 346-1100
TBPELS Firm Registration No. F-3043

CITY OF GEORGETOWN, TEXAS

CEDAR BREAKS AND D B WOOD LIFT STATIONS

MECHANICAL STANDARD DETAILS II

PROJECT NO. 2048-272644
FILE NAME: MZ-2
SHEET NO.
MD-2

XREFs: [CDMS_2234_South lake to South fork_Border] Images: []
Last saved by: RAAUTHV Time: 11/1/2023 5:48:15 PM
pw:\\cdmsmith-wa02-pw.bentley.com:pw_pt1\204872\272644\04 Design Services NM_50%\05 Process Mechanical\10 BIM_CADD\02 Details\M002STDT.dwg
© 2023 CDM SMITH ALL RIGHTS RESERVED
REUSE OF DOCUMENTS: THESE DOCUMENTS AND DESIGNS PROVIDED BY PROFESSIONAL SERVICE, INCORPORATED HEREIN, ARE THE PROPERTY OF CDM SMITH AND ARE NOT TO BE USED, IN WHOLE OR PART, FOR ANY OTHER PROJECT WITHOUT THE WRITTEN AUTHORIZATION OF CDM SMITH.
Plotted: 12/13/2023 6:30:56 PM

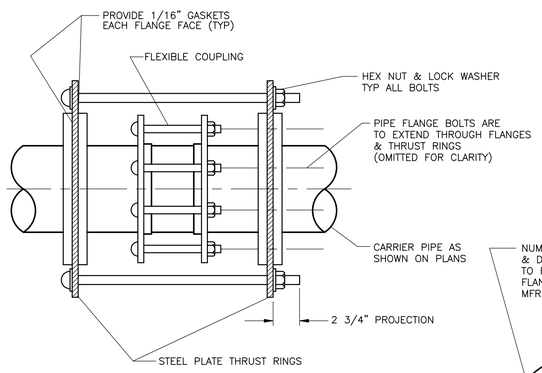

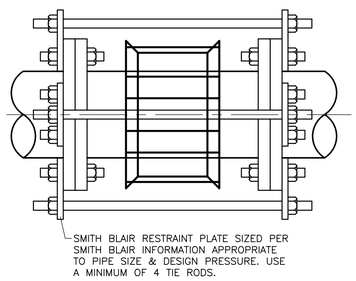

FOR 12" DIAMETER PIPE & LARGER

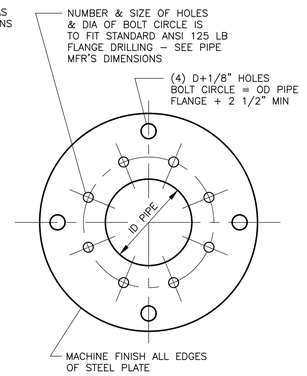

NOTES

1 FOR PIPE 6" DIA & SMALLER, USE (2) 3/4" DIA TIE RODS MIN.

2 FOR PIPE 8" DIA & LARGER, USE (4) 1" DIA TIE RODS MIN.

THRUST HARNESS FOR FLEXIBLE COUPLING

DETAIL A
NTS

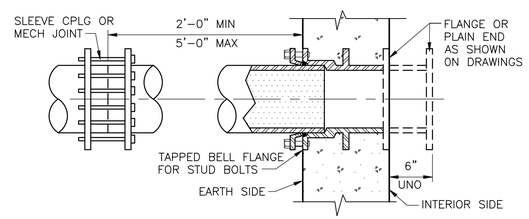

DI MJ WALL PIPE IN NEW WALL

DETAIL B
NTS

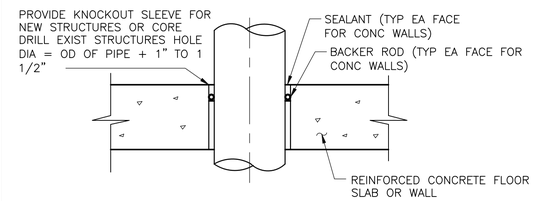

NOTE

1 IN CMU WALLS, UNITS TO BE PENETRATED SHALL BE MORTAR–FILLED TO MIN 12" AROUND PIPE PENETRATION.

PIPE THROUGH FLOOR PENETRATION

DETAIL C
NTS

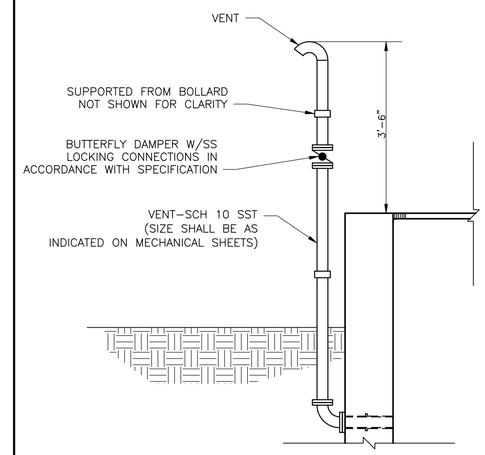

VENT PIPE

DETAIL D
NTS

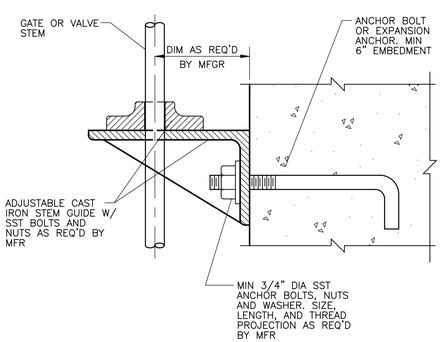

VALVE OR GATE STEM GUIDE

DETAIL E
NTS

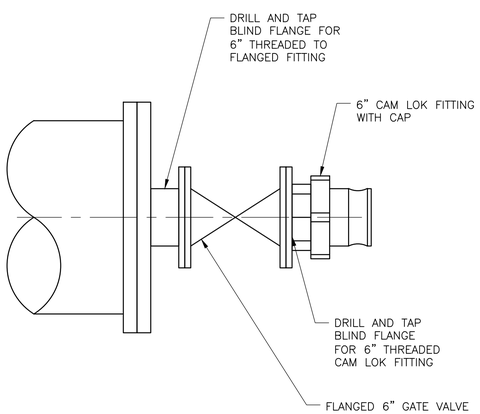

TAPPED FLANGE CONNECTION

DETAIL F
NTS

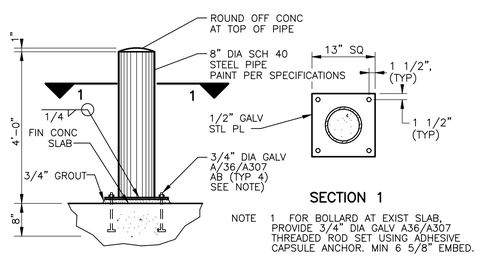

NOTE 1 FOR BOLLARD AT EXIST SLAB, PROVIDE 3/4" DIA GALV A36/A307 THREADED ROD SET USING ADHESIVE CAPSULE ANCHOR. MIN 6 5/8" EMBED.

BOLLARD

DETAIL G
NTS

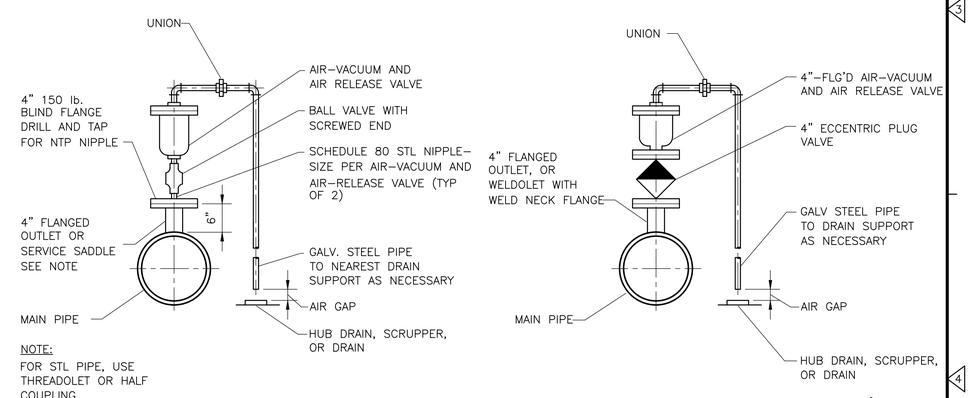

AIR RELEASE AND VACUUM

DETAIL H
NTS

STATE OF TEXAS
GERALD S. FURRIER
129811
LICENSED
PROFESSIONAL ENGINEER
12/11/2023

REV. NO.	DATE	DRWN	CHKD	REMARKS

DESIGNED BY: M. TESFAI
DRAWN BY: D. SNEHA
SHEET CHK'D BY: M. MAHADEVAN
CROSS CHK'D BY: M. TESFAI
APPROVED BY: G. FURRIER
DATE: DECEMBER 2023

CDM Smith
8310-1 N Capital of Texas Hwy, Suite 250
Austin, TX 78731
Tel: (512) 346-1100
TBPELS Firm Registration No. F-3043

CITY OF GEORGETOWN, TEXAS

CEDAR BREAKS AND D B WOOD LIFT STATIONS

MECHANICAL STANDARD DETAILS III

PROJECT NO. 2048–272644
FILE NAME: MZ–3

SHEET NO.
MD-3

XREFs: [CDMS_2234_South lake to South fork_Border] Images: []
Last saved by: RANJITHV Time: 11/1/2023 5:46:46 PM
pw:\\cdmsmith-ecd2-pw.bentley.com:pw_pw1\2048\272644\04 Design Services NM_50%\05 Process Mechanical\10 BIM_CADD\02 Details\M003STDT.dwg
© 2023 CDM SMITH ALL RIGHTS RESERVED.
REUSE OF DOCUMENTS: THESE DOCUMENTS AND DESIGNS PROVIDED BY PROFESSIONAL SERVICE, INCORPORATED HEREIN, ARE THE PROPERTY OF CDM SMITH. AND ARE NOT TO BE USED, IN WHOLE OR PART, FOR ANY OTHER PROJECT WITHOUT THE WRITTEN AUTHORIZATION OF CDM SMITH.
Plotted: 12/13/2023 8:30:27 PM

ONE LINE OR CONTROL DIAGRAM	PLAN	DESCRIPTION
52 CS	—	MEDIUM VOLTAGE DRAWOUT TYPE POWER CIRCUIT BREAKER CS=CONTROL SWITCH
FRAME TRIP	CB	LOW VOLTAGE AIR OR MOLDED CASE CIRCUIT BREAKER, 3 POLE UNLESS OTHERWISE NOTED.
SIZE # AMPS TYPE *		COMBINATION MOTOR CIRCUIT PROTECTOR AND MAGNETIC MOTOR STARTER, FULL VOLTAGE NON-REVERSING UNLESS OTHERWISE NOTED: * FVR – FULL VOLTAGE REVERSING RVNR – REDUCED VOLTAGE NON-REVERSING RVAT – REDUCED VOLTAGE AUTOTRANSFORMER RVSS – REDUCED VOLTAGE SOLID STATE 2S1W – TWO SPEED, ONE WINDING 2S2W – TWO SPEED, TWO WINDING (DIAGRAMMATICALLY SHOWN, CONTRACTOR SHALL FIELD LOCATE)
*		NON-FUSIBLE DISCONNECT SWITCH, 600 VOLT, 3 POLE * AMPERE RATING NOTED IF OTHER THAN 30A (DIAGRAMMATICALLY SHOWN, CONTRACTOR SHALL FIELD LOCATE)
* *	F	FUSIBLE DISCONNECT SWITCH, 600 VOLT, 3 POLE, * AMPERE RATING AND FUSE SIZE AS NOTED * AMPERE RATING NOTED IF OTHER THAN 30A FUSE RATING (DIAGRAMMATICALLY SHOWN, CONTRACTOR SHALL FIELD LOCATE)
	P 2	MANUAL MOTOR STARTER WITH THERMAL OVERLOAD HEATER, 1 POLE UNLESS OTHERWISE NOTED "P" INDICATES WITH PILOT LIGHT "2" INDICATES TWO POLE (DIAGRAMMATICALLY SHOWN, CONTRACTOR SHALL FIELD LOCATE)
	—	DRAWOUT TYPE EQUIPMENT OR DEVICE
	—	MEDIUM VOLTAGE CABLE TERMINATION
	—	MEDIUM VOLTAGE AIR INTERRUPTER SWITCH
*	—	MEDIUM VOLTAGE FUSED AIR INTERRUPTER SWITCH * FUSE RATING
	—	MEDIUM VOLTAGE FUSED MOTOR CONTROLLER
XFMR NO. 1 480V KVA 120/208V 3P, 4W	T	TRANSFORMER, RATINGS AND CONNECTIONS AS NOTED. UNLESS OTHERWISE NOTED ON THE SINGLE LINE DIAGRAMS, ALL DRY TYPE TRANSFORMERS SERVICING ADMINISTRATIVE AND LABORATORY SPACES SHALL HAVE A K FACTOR OF 4. ISOLATION TRANSFORMERS SHALL HAVE A K-20 RATING
* A TO 5	—	CURRENT TRANSFORMER * QUANTITY A = PRIMARY AMPERES
* V TO 120	—	POTENTIAL TRANSFORMER * QUANTITY V = PRIMARY VOLTAGE
	G	GENERATOR, RATINGS AND CONNECTIONS AS NOTED
ATS N S 100A	—	AUTOMATIC OR MANUAL TRANSFER SWITCH NO.1 (ATS-1), (MTS-1) "N" INDICATES NORMAL OR PREFERRED SOURCE "S" INDICATES STANDBY OR ALTERNATE SOURCE 100A INDICATES CONTINUOUS CURRENT RATING
*	*	VARIABLE SPEED DRIVE CONTROLLER * D.C. = D.C. DRIVE CONTROLLER SCR = SILICON CONTROLLED RECTIFIER VFD = VARIABLE FREQUENCY DRIVE
#KW	E	UNIT HEATER – ELECTRIC HEATING COIL AND FAN # – RATING
—	U	UNIT HEATER – GAS FIRED, STEAM OR WATER HEATING COIL AND FAN
5	M	MOTOR, NUMERAL INDICATES HORSEPOWER
VS VM *	—	VOLTMETER WITH SWITCH, 3 PHASE
AS AM *	—	AMMETER WITH SWITCH, 3 PHASE

ONE LINE OR CONTROL DIAGRAM	PLAN	DESCRIPTION
*	—	METER * WM – WATTMETER WHM – WATTHOUR METER WHDM – WATTHOUR DEMAND METER WHDR – WATTHOUR DEMAND RECORDER PF – POWER FACTOR METER DMU – DIGITAL METERING UNIT TRANSDUCER AX – CURRENT TRANSDUCER WX – WATT TRANSDUCER WHX – WATTHOUR TRANSDUCER
*	*	RELAY, NO. AS INDICATED 25 – SYNCHRONISM CHECK RELAY 27 – UNDERVOLTAGE RELAY 32 – DIRECTIONAL POWER RELAY 38 – BEARING PROTECTIVE DEVICE 40 – LOSS OF EXCITATION RELAY 42 – RUNNING CONTACTOR/PILOT RELAY 46 – REVERSE PHASE/PHASE BALANCE/CURRENT RELAY 47 – PHASE SEQUENCE VOLTAGE RELAY 49 – MACHINE OR TRANSFORMER THERMAL RELAY 50/51 – INSTANTANEOUS/TIME OVERCURRENT RELAY 50G – INSTANTANEOUS GROUND 51 – TIME OVERCURRENT RELAY 51G – TIME OVERCURRENT RELAY, GROUNDING RESISTOR TYPE 51N – TIME OVERCURRENT RELAY, RESIDUAL TYPE 51V – TIME OVERCURRENT RELAY WITH VOLTAGE RESTRAINT 51X – AUXILIARY RELAY (TRIPS CB AND ALARMS) 59 – OVERVOLTAGE RELAY 60 – NEGATIVE SEQUENCE VOLTAGE RELAY 62 – TIME DELAY RELAY 63 – OVERPRESSURE RELAY 64 – GENERATOR FIELD GROUND RELAY 67 – AC DIRECTIONAL OVERCURRENT RELAY 74 – ALARM LATCHING RELAY 83 – AUTOMATIC SELECTIVE CONTROL OR TRANSFER RELAY 86 – LOCKING-OUT RELAY 87 – DIFFERENTIAL PROTECTIVE RELAY B – SUFFIX INDICATES "BUS" G – SUFFIX INDICATES "GENERATOR" GF – GROUND FAULT ST – SHUNT TRIP T – SUFFIX INDICATES "TRANSFORMER" X – SUFFIX INDICATES "AUXILIARY"
*	—	SPECIAL CAPACITOR * SC – SURGE CAPACITOR PF – POWER FACTOR CORRECTION CAPACITOR
*	—	TUNED POWER FACTOR CORRECTION CAPACITOR
	—	PUSHBUTTON, MOMENTARY CONTACT, SPRING RETURN, NORMALLY CLOSED
	—	PUSHBUTTON, MOMENTARY CONTACT, SPRING RETURN, NORMALLY OPEN
	ES	EMERGENCY STOP PUSHBUTTON WITH RED MUSHROOM HEAD OPERATOR (MAINTAINED CONTACT)
STOP START	PBL	START-STOP PUSHBUTTON CONTROL STATION (MOMENTARY CONTACT) WITH LOCKOUT DEVICE ON STOP
	PBM	START-STOP PUSHBUTTON CONTROL STATION, MAINTAINED CONTACT WITH LOCKOUT DEVICE ON STOP
OFF ON	S/S	OFF/ON SELECTOR SWITCH
L R (XO) (OX)	LR	LOCAL/REMOTE SELECTOR SWITCH
A B C* (XOO) (OXO) (OOX)	*	3 POSITION SELECTOR SWITCH, MAINTAINED CONTACT O-OPEN X-CLOSED POSITION / TOP CONTACT / MIDDLE CONTACT / BOTTOM CONTACT A / X / O / O B / O / X / O C / O / O / X NAMEPLATE (A/B/C) HOA – HAND/OFF/AUTO HOR – HAND/OFF/REMOTE LOR – LOCAL/OFF/REMOTE RSL – RAISE/STOP/LOWER TOA – TEST/OFF/AUTO

GD/VF #	GD/VF #	GAS DETECTOR / VENTILATION FAILURE ALARM
		# INDICATES TYPE OF UNIT
		1=MASTER, 2=REMOTE

42 #	—	MOTOR STARTER COIL, NUMBER AS INDICATED TO DENOTE INTERLOCKING ONLY
CR #	—	CONTROL RELAY COIL, NUMBER AS INDICATED

ONE LINE OR CONTROL DIAGRAM	PLAN	DESCRIPTION
*	—	PILOT LIGHT, COLOR AS NOTED * R – RED G – GREEN B – BLUE W – WHITE A – AMBER
*	—	PILOT LIGHT, PUSH-TO-TEST TYPE, COLOR AS NOTED ABOVE.
* # RANGE SETPOINT * NOTC NCTO NOTO NCTC		TIME DELAY RELAY RANGE AS NOTED SETPOINT AS NOTED # NUMBER AS INDICATED * TDE – TIME DELAY AFTER ENERGIZATION ON DELAY TDD – TIME DELAY AFTER DE-ENERGIZATION OFF DELAY NOTC– NORMALLY OPEN, TIMED CLOSING WHEN ENERGIZED NCTO– NORMALLY CLOSED, TIMED OPENING WHEN ENERGIZED NOTO– NORMALLY OPEN, TIMED OPENING WHEN DE-ENERGIZED NCTC– NORMALLY CLOSED, TIMED CLOSING WHEN DE-ENERGIZED
—	* – ##	FIELD INSTRUMENT, TAG NO. AS INDICATED * INDICATES INSTRUMENT TYPE DEFINED ON LOOP SHEETS OR P & ID ## INDICATES LOOP NO.
	LS OR ■	LIQUID LEVEL (FLOAT) SWITCH NORMALLY OPEN, CLOSES ON RISING LEVEL NORMALLY CLOSED, OPENS ON RISING LEVEL
	PS OR ■	PRESSURE OR VACUUM SWITCH NORMALLY OPEN, CLOSES ON RISING PRESSURE NORMALLY OPEN, CLOSES ON DROPPING PRESSURE NORMALLY CLOSED, OPENS ON RISING PRESSURE NORMALLY CLOSED, OPENS ON DROPPING PRESSURE
	TS OR T OR ■	TEMPERATURE SWITCH OR THERMOSTAT NORMALLY OPEN, CLOSES ON RISING TEMPERATURE NORMALLY OPEN, CLOSES ON DROPPING TEMPERATURE NORMALLY CLOSED, OPENS ON RISING TEMPERATURE NORMALLY CLOSED, OPENS ON DROPPING TEMPERATURE
	FS OR ■	FLOW SWITCH (AIR, WATER, ETC.) NORMALLY OPEN, CLOSES ON INCREASED FLOW NORMALLY CLOSED, OPENS ON INCREASED FLOW
	ZS OR ■	POSITION (LIMIT) SWITCH NORMALLY OPEN NORMALLY OPEN – HELD CLOSED NORMALLY CLOSED NORMALLY CLOSED – HELD OPEN
	WS OR ■	TORQUE SWITCH NORMALLY OPEN, CLOSES ON HIGH TORQUE NORMALLY CLOSED, OPENS ON HIGH TORQUE
#	—	UTILIZED IN CONJUNCTION WITH OTHER CONTROL SCHEMATIC SYMBOLS TO DEPICT THE PHYSICAL LOCATION OF THE DEVICE # REPRESENTS LOCATION SEE LOCATION LEGEND ON DRAWING
	—	CONDUCTORS OR CONDUITS CROSSING PATHS BUT NOT CONNECTED
	—	CONDUCTORS ELECTRICALLY CONNECTED
	S	SOLENOID VALVE

ONE LINE OR CONTROL DIAGRAM	PLAN	DESCRIPTION
LA	—	LIGHTNING ARRESTER
		GROUND OR GROUND ROD
30A	—	FUSE, AMPERE RATING AS NOTED
	HTR	STRIP HEATER OR HEATING ELEMENT
	—	INDUCTOR
TG	TG	TACHOMETER GENERATOR
	—	CONTACT, NORMALLY OPEN (NO)
	—	CONTACT, NORMALLY CLOSED (NC)
	—	OVERLOAD RELAY HEATER
	—	* K = KEY INTERLOCK E = ELECTRICAL INTERLOCK
TB	—	TERMINAL OR TEST BLOCK
RTD	—	RESISTANCE TEMPERATURE DETECTOR
VE OR VE	—	VIBRATION DETECTOR
DM	DM	DAMPER MOTOR
ETM	—	ELAPSED TIME METER
M	M	MOTOR OPERATED VALVE OR GATE
	—	INDICATES LIMITS OF ELECTRICAL EQUIPMENT OR WIRING ENCLOSURE

EXISTING WORK | NEW WORK | FUTURE EXPANSION

EXISTING, NEW OR FUTURE CONDITION DESIGNATION

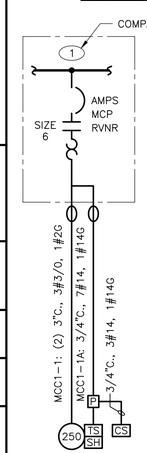

INDICATES CONDUIT IS ALL OR PARTIALLY LOCATED UNDERGROUND. CONDUIT SIZE SHOWN INDICATES THE SIZE WITHIN STRUCTURE. UNDERGROUND CONDUIT SIZE IS SHOWN ON DUCT BANK SECTIONS.

MCC1-1: (2) 3"C., 3#3/0, 1#2G DENOTES A QUANTITY OF TWO (2) 3-INCH CONDUITS EACH CONTAINING THREE NO. 3/0 AWG CONDUCTORS AND 1 NO. 2 AWG GROUND CONDUCTOR, FROM NEMA SIZE 6 STARTER IN MCC-1 TO 250HP MOTOR LOAD.

MCC1-1A: 3/4"C., 7#14, 1#14G DENOTES ONE 3/4-INCH CONDUIT CONTAINING SEVEN NO. 14 AWG CONTROL CONDUCTORS AND 1 NO. 14 AWG GROUND CONDUCTOR.

MCC1-1 AND MCC1-1A: DENOTES CONDUIT IDENTIFICATION (ID) (TYPICAL)

NOTES:
1. PROTECTIVE/CONTROL DEVICE AS SHOWN.
2. CONTROL/AUXILIARY DEVICES AT OR NEAR EQUIPMENT. EQUIPMENT SHALL BE INSTALLED AND WIRED AS REQUIRED BY EQUIPMENT FURNISHED AND/OR CONTROL DIAGRAM.

TYPICAL ONE LINE DIAGRAM SHOWING POWER AND CONTROL TO EQUIPMENT

NOTES:

1. IN GENERAL CONDUIT ROUTING FOR EQUIPMENT AND DEVICES IS NOT SHOWN ON THE PLANS. THE CONTRACTOR SHALL BE RESPONSIBLE FOR ROUTING ALL CONDUITS WHICH SHALL INCLUDE CONDUITS SHOWN ON ONE-LINE AND RISER DIAGRAMS AND HOME-RUNS SHOWN ON PLAN DRAWINGS. REFER TO SPECIFICATIONS FOR MATERIALS AND INSTALLATION REQUIREMENTS.
2. THE WIRING DIAGRAMS, QUANTITY AND SIZE OF WIRES AND CONDUITS REPRESENT A SUGGESTED ARRANGEMENT BASED UPON SELECTED STANDARD COMPONENTS OF ELECTRICAL EQUIPMENT. MODIFICATIONS ACCEPTABLE TO THE ENGINEER MAY BE MADE BY THE CONTRACTOR TO ACCOMMODATE EQUIPMENT ACTUALLY PURCHASED. THE BASIC SEQUENCE AND METHOD OF CONTROL MUST BE MAINTAINED AS INDICATED ON THE DRAWINGS AND/OR SPECIFICATIONS.
3. SWITCHGEAR AND MOTOR CONTROL CENTER COMPARTMENT DESIGNATIONS AS INDICATED BELOW:
   BLANK: NOT INTENDED FOR USE. PLATE ONLY
   SPACE: EQUIPPED WITH REQUIRED BUS AND HARDWARE FOR THE FUTURE ADDITION OF BREAKERS AND/OR STARTERS WITHIN THE SIZE AND RANGE SHOWN
   SPARE: CONTAINS A COMPLETELY INSTALLED BREAKER AND/OR STARTER OF SIZE AND TYPE INDICATED FOR FUTURE USE.
4. INTERPRETATION OF ELECTRICAL DRAWINGS: CIRCUIT IDENTIFICATION, ROUTING, AND SIZES OF CONDUITS AND WIRES ARE SHOWN ON THE FOLLOWING DRAWINGS:

A. ONE LINE POWER DIAGRAMS: POWER, CONTROL AND SIGNAL WIRING REQUIREMENTS FOR ELECTRICAL DISTRIBUTION EQUIPMENT AND UTILIZATION EQUIPMENT POWERED FROM SWITCHGEAR, SWITCHBOARDS, MOTOR CONTROL CENTERS AND MAJOR POWER DISTRIBUTION PANELBOARDS ARE TYPICALLY SHOWN ON THE ONE LINE DIAGRAMS. THE PARAMETERS IDENTIFIED ON THE ONE LINE DIAGRAMS ARE: CIRCUIT IDENTIFICATION, CIRCUIT ORIGIN AND DESTINATION, CONDUIT SIZE, WIRE SIZE AND QUANTITY FOR COMPLETE CIRCUIT LENGTH, AND AUXILIARY DEVICES ASSOCIATED WITH THE CONTROL/PROTECTION OF THE POWERED EQUIPMENT, AND SIZE OF THE GROUNDING ELECTRODE CONDUCTORS.

B. INSTRUMENTATION AND CONTROL RISER DIAGRAMS: POWER, CONTROL, SIGNAL AND DATA HIGHWAY WIRING REQUIREMENTS FOR INSTRUMENTS AND CONTROL DEVICES CONTROLLED/MONITORED FROM INSTRUMENTATION AND CONTROL PANELS SUCH AS RTUS, PLCS, TERMINAL CABINETS, AND REMOTE I/O PANELS ARE TYPICALLY SHOWN ON THE INSTRUMENTATION AND CONTROL ONE LINE DIAGRAMS. THE PARAMETERS IDENTIFIED ON THE ONE LINE DIAGRAMS ARE: CIRCUIT IDENTIFICATION, CIRCUIT ORIGIN AND DESTINATION, CONDUIT SIZE, WIRE SIZE, QUANTITY AND TYPE FOR COMPLETE CIRCUIT LENGTH, AND AUXILIARY DEVICES ASSOCIATED WITH THE CONTROL/PROTECTION OF THE POWERED EQUIPMENT.

C. FLOOR PLANS: FOR DETERMINING THE LENGTH OF CIRCUITS LOCATED WITHIN STRUCTURES, FLOOR PLANS SHOW THE LOCATION OF ELECTRICAL DISTRIBUTION EQUIPMENT, CONTROL PANELS, UTILIZATION EQUIPMENT, INSTRUMENTS, ANCILLARY EQUIPMENT AND DEVICES AND THE ANTICIPATED PENETRATION LOCATIONS WHERE CONDUITS EXIT/ENTER THE STRUCTURE. HOMERUNS MAY ALSO BE SHOWN FROM MISCELLANEOUS EQUIPMENT NOT SHOWN ON A ONE LINE OR RISER DIAGRAM.

D. SITE PLANS: FOR DETERMINING THE LENGTH OF CIRCUITS EXTERIOR TO STRUCTURES AND TO IDENTIFY THE SPECIFIC REQUIREMENTS OF THE UNDERGROUND CONDUITS OR DUCT BANKS, SITE PLANS SHOW THE GENERAL ROUTING OF UNDERGROUND CONDUITS AND DUCT BANKS WITH SECTIONS INDICATING THE CONDUIT SIZE, ARRANGEMENT AND CIRCUIT ROUTING.

E. NOTE THAT CONDUIT SIZE WITHIN THE STRUCTURE IS INDICATED ON ONE-LINE DIAGRAM AND UNDERGROUND SIZE IS INDICATED ON DUCT BANK SECTIONS.

GENERAL NOTE
THIS IS A STANDARD LEGEND. SOME SYMBOLS MAY NOT APPEAR ON THE DRAWINGS.

STATE OF TEXAS
JOYSON VARGHESE
134792
LICENSED PROFESSIONAL ENGINEER
12/9/23

REV. NO.	DATE	DRWN	CHKD	REMARKS

DESIGNED BY: K. DINEESH
DRAWN BY: M. VISHNU
SHEET CHK'D BY: J. VARGHESE
CROSS CHK'D BY: S. MEHTA
APPROVED BY: J. VARGHESE
DATE: DECEMBER 2023

CDM Smith
8310-1 N Capital of Texas Hwy, Suite 250
Austin, TX 78731
Tel: (512) 346-1100
TBPELS Firm Registration No. F-3043

CITY OF GEORGETOWN, TEXAS

CEDAR BREAKS AND D B WOOD LIFT STATIONS

ELECTRICAL SYMBOLS, LEGEND, AND ABBREVIATIONS I

PROJECT NO. 2048-272644
FILE NAME: E001LSLG.DWG
SHEET NO. E-1

XREFs: [CDMS_2234_South Iake to South fork_Border: J. VARGHESE- review stamp, CDMS_2234_ LS_Border] Images: []
Last saved by: VARGHESEJ2 Time: 12/11/2023 12:00:28 PM
pw:\\cdmsmith-pz02-pw.bentley.com:pw_pf1\2048\272644\04 Design Services NM_50%\09 Electrical\10 BIM_CADD\E001LSLG.dwg
©2023 CDM SMITH ALL RIGHTS RESERVED.
REUSE OF DOCUMENTS: THESE DOCUMENTS AND DESIGNS PROVIDED BY PROFESSIONAL SERVICE, INCORPORATED HEREIN, ARE THE PROPERTY OF CDM SMITH AND ARE NOT TO BE USED, IN WHOLE OR PART, FOR ANY OTHER PROJECT WITHOUT THE WRITTEN AUTHORIZATION OF CDM SMITH.

Plotted: 12/11/2023 3:03:46 PM

SYMBOL	DESCRIPTION
A 3 b	LIGHTING FIXTURE "A" – FIXTURE TYPE (SEE LIGHTING FIXTURE SCHEDULE) "b" – CONTROLLED BY SWITCH "b" "3" – CIRCUIT NUMBER
A 3 b	LIGHTING FIXTURE, NOTATIONS SAME AS ABOVE
A 3 b	WALL MOUNTED TYPE LIGHTING FIXTURE, NOTATIONS SAME AS ABOVE
A 3 OR A 3	CROSS HATCH INDICATES LIGHTING FIXTURE THAT IS UNSWITCHED AND SHALL REMAIN ON AT ALL TIMES. NOTATIONS SAME AS ABOVE.
A 3 b OR A 3 b	SHADED AREA INDICATES LIGHTING FIXTURE THAT IS EQUIPPED WITH EMERGENCY BACKUP POWER SOURCE. NOTATIONS SAME AS ABOVE.
A 3	POLE MOUNTED AREA TYPE LIGHTING FIXTURE, NOTATIONS SAME AS ABOVE
A 3	POLE MOUNTED ROADWAY TYPE LIGHTING FIXTURE, NOTATIONS SAME AS ABOVE
EM 3 (*)	EMERGENCY LIGHTING BATTERY UNIT WITH TWO LAMP HEADS "EM" – FIXTURE TYPE (SEE LIGHTING FIXTURE SCHEDULE) "3" – SUPERVISORY CIRCUIT * – FIXTURE TAG #
R–2 BU–1(*)	REMOTE EMERGENCY ADJUSTABLE WALL LIGHTING FIXTURE WITH TWO LAMP HEADS "R–2" – FIXTURE TYPE (SEE LIGHTING FIXTURE SCHEDULE) * – HOME RUN TO BATTERY UNIT INDICATED. CONDUIT SHALL BE 3/4" AND CONTAIN (2) NO. 12 AWG BRANCH CIRCUIT CONDUCTORS AND (1) NO. 12 AWG GROUND CONDUCTOR UNLESS OTHERWISE INDICATED.
A 3	COMBINATION BATTERY UNIT AND EXIT SIGN. FILLED QUADRANT REPRESENTS FACE SIDE OF SIGN.
A 3	CEILING MOUNTED EXIT SIGN, NOTATIONS SAME AS ABOVE. WHEN USED, ARROW INDICATES DIRECTION OF EGRESS. FILLED QUADRANT REPRESENTS FACE SIDE OF SIGN. (DOUBLE FACE DOUBLE CHEVRONS SHOWN)
A 3	WALL MOUNTED EXIT SIGN, NOTATIONS SAME AS ABOVE. WHEN USED, ARROW INDICATES DIRECTION OF EGRESS. FILLED QUADRANT REPRESENTS FACE SIDE OF SIGN.
RH–3 E 3 BU–1(*)	REMOTE EMERGENCY CEILING LIGHTING FIXTURE. "RH–3" – FIXTURE TYPE (SEE LIGHTING FIXTURE SCHEDULE) "3" – SUPERVISORY CIRCUIT * – HOME RUN TO BATTERY UNIT INDICATED. CONDUIT SHALL BE 3/4" AND CONTAIN 2 NO. 12 AWG BRANCH CIRCUIT CONDUCTORS AND 1 NO. 12 AWG GROUND CONDUCTOR UNLESS OTHERWISE INDICATED.
	HOME RUN TO DESIGNATED EQUIPMENT. BRANCH CIRCUIT CONDUIT WITH 2 NO. 12 AWG BRANCH CIRCUIT CONDUCTORS AND 1 NO. 12 AWG GROUND CONDUCTOR UNLESS OTHERWISE NOTED. NUMBER OF ARROWS INDICATE NUMBER OF CIRCUITS. FOR MINIMUM SIZE CONDUIT PERMITTED REFER TO THE SPECIFICATIONS.
	CONDUIT CONCEALED IN WALL, IN SLAB ABOVE, OR ABOVE CEILING.
	CONDUIT CONCEALED IN OR BELOW FLOOR OR UNDERGROUND.
	CONDUIT RUN EXPOSED. RUN PARALLEL OR PERPENDICULAR TO STRUCTURE OR WALL.
	'X' INDICATES EXPLOSION PROOF CONDUIT SEAL FITTING.
	CONCRETE ENCASED DUCTBANK. WIDTH VARIES, SEE DUCTBANK SECTION/DETAILS FOR REQUIREMENTS AND WIDTH
	CONDUIT STUBBED OUT AND CAPPED
(2) 3"C., 3#3/0, 1#2G	DENOTES A QUANTITY OF TWO (2) 3–INCH CONDUITS EACH CONTAINING THREE NO. 3/0 AWG CONDUCTORS AND 1 NO. 2 AWG GROUND CONDUCTOR.
2–2/C#16 SH	DENOTES A QUANTITY OF TWO INSTRUMENT CABLES. EACH CABLE TO CONSIST OF TWO NO. 16 AWG CONDUCTORS TWISTED TOGETHER AND COVERED WITH A METALLIC SHIELD AND AN OVERALL PROTECTIVE JACKET. REFER TO THE SPECIFICATIONS FOR THE EXACT CABLE TO BE PROVIDED.
2–3/C#16 SH	SAME AS ABOVE EXCEPT CABLE TO CONSIST OF THREE NO. 16 AWG CONDUCTORS TWISTED, SHIELDED AND COVERED WITH AN OVERALL PROTECTIVE JACKET. REFER TO THE SPECIFICATIONS FOR THE EXACT CABLE TO BE PROVIDED.
(3) 4"C.	THREE 4–INCH CONDUITS
	FLEXIBLE METAL CONDUIT "WHIP" (3/4"C., 2#12, 1#12G UNLESS OTHERWISE NOTED) FOR LIQUID TIGHT MOTOR CONNECTIONS
	'X' INDICATES CONDUIT SEAL FITTING IN OTHER THAN CODE REQUIRED LOCATIONS.
	INDICATES MOTOR STARTER AND/OR MOTOR CONTROL EQUIPMENT WITHIN THE ENCLOSURE.

SYMBOL	DESCRIPTION
$a	SINGLE POLE SWITCH "a" INDICATES FIXTURES CONTROLLED.
$a2	DOUBLE POLE SWITCH "a" INDICATES FIXTURES CONTROLLED.
$c3	THREE WAY SWITCH "c" INDICATES FIXTURES CONTROLLED.
$a4	FOUR WAY SWITCH "a" INDICATES FIXTURES CONTROLLED.
$aD	DIMMER SWITCH "a" INDICATES FIXTURES CONTROLLED
$OS	SINGLE POLE SWITCH "OS" INDICATES A PASSIVE INFRARED OCCUPANCY SENSOR
$OS2	DOUBLE POLE SWITCH "OS" INDICATES PROGRAMMABLE OCCUPANCY SENSOR CAPABLE OF INBOARD/OUTBOARD SWITCHING
$DT	SINGLE POLE SWITCH "DT" INDICATES DUAL TECHNOLOGY PROGRAMMABLE OCCUPANCY SENSOR CAPABLE OF SENSING MOTION AND SOUND
C 3	LIGHTING CONTACTOR WITH NUMBER OF POLES AS INDICATED
TM	TIME SWITCH
	PUSH BUTTON STATION
TYPE A	INDICATES ALL LIGHTING FIXTURES WITHIN THE ROOM OR AREA IN WHICH THIS NOTATION APPEARS SHALL BE TYPE "A" UNLESS OTHERWISE NOTED. SEE LIGHTING FIXTURE SCHEDULE FOR TYPES
	LIGHTING PANELBOARD (LP–#) SHOWN ON PLAN PER ACTUAL PANEL DIMENSIONS
	POWER PANELBOARD (PP–#) OR DISTRIBUTION PANELBOARD (DP–#) SHOWN ON PLAN PER ACTUAL PANEL DIMENSIONS
	LIGHTING CONTACTOR PANELBOARD (LCP–#) SHOWN ON PLAN PER ACTUAL PANEL DIMENSIONS
* 4	DUPLEX RECEPTACLE, 20A, 120V, 2P, 3W * GFCI – GROUND FAULT CIRCUIT INTERRUPTER TYPE WP – WEATHERPROOF XP – EXPLOSION PROOF T – TRANSIENT VOLTAGE SURGE SUPPRESSOR IC – ISOLATED GROUND 4 – CIRCUIT NUMBER
* 4	DUPLEX RECEPTACLE, 20A, 120V, 2P, 3W MOUNTED ABOVE COUNTER–TOP OR 42" AFF * NOTATIONS SAME AS ABOVE
* 60 3 4W	SPECIAL PURPOSE RECEPTACLE * – VOLT RATING "3" – NUMBER OF POLES "60" – AMPERE RATING "4W" – 4 WIRES IN ADDITION TO GROUND
	MULTI–OUTLET ASSEMBLY, SYMBOL DENOTES RECEPTACLE TYPE
	FLUSH FLOOR OUTLET BOX WITH TYPE OUTLET INDICATED
	UNDER FLOOR DUCT SYSTEM WITH TYPE OUTLETS INDICATED
	THREE CELL UNDER FLOOR DUCT SYSTEM JUNCTION BOX
J OR J	JUNCTION BOX
P	PULL BOX
TC	TERMINAL CABINET
OS	OCCUPANCY SENSOR
PC	PHOTOCELL
ESA	EMERGENCY EYEWASH/SHOWER ALARM STATION WITH FLOW SWITCH(ES)
	INDICATED EQUIPMENT AND MATERIALS TO BE DEMOLISHED
	GROUND SYSTEM GRID OR LOOP, 36" BELOW FINISHED GRADE UNLESS OTHERWISE NOTED.
	EXOTHERMIC WELD CONNECTION
	3/4" x 10'–0" GROUND ROD. UNLESS SPECIFIED OTHERWISE.
	GROUND ROD TEST WELL STATION (SEE DETAIL SHEET FOR REQUIREMENTS)

SYMBOL	DESCRIPTION
COMMUNICATION SYSTEMS	
K	TELEPHONE OUTLET FOR DESK TYPE HANDSET K = KEY SYSTEM
K	TELEPHONE OUTLET FOR WALL TYPE HANDSET (MOUNT UP 4'–6") K = KEY SYSTEM
	PAGE/PARTY TELEPHONE OUTLET FOR DESK TYPE HANDSET
	PAGE/PARTY TELEPHONE OUTLET FOR WALL TYPE HANDSET, MOUNT UP 4'–6"
S H W	PAGING SPEAKER, WALL MOUNTED H = HORN TYPE W = WIDE ANGLE TYPE
S W	PAGING SPEAKER, WALL MOUNTED, BI–DIRECTIONAL, HORN TYPE W = WIDE ANGLE TYPE
S	PAGING SPEAKER, FLUSH MOUNTED CEILING TYPE
S	PAGING SPEAKER, SURFACE MOUNTED CEILING TYPE
VC	REMOTE WALL MOUNTED VOLUME CONTROL FOR CEILING SPEAKER, MOUNT UP 5'–0"
A	PAGING SPEAKER AMPLIFIER ASSEMBLY
TM	TELEPHONE CABINET OR BACKBOARD AS NOTED
P OR C	"C" – DATA INPUT/OUTPUT CABLE OUTLET "P" – PROCESS COMPUTER SYSTEM (CAT6 RJ–45 JACK)
GB	GAS DETECTION/VENTILATION FAILURE WEATHERPROOF DUAL–LITE BEACON MOUNT TOP OF DEVICE UP 6'–8" A.F.F.
15 G	GAS DETECTION/VENTILATION FAILURE HORN/STROBE MOUNT TOP OF DEVICE UP 6'–8" A.F.F.
G	GAS DETECTION/VENTILATION FAILURE HORN, MOUNT TOP OF DEVICE UP 6'–8" A.F.F.
G	GAS DETECTION/VENTILATION FAILURE STROBE, MOUNT TOP OF DEVICE UP 6'–8" A.F.F.
SECURITY SYSTEMS	
SACP	SECURITY ALARM CONTROL PANEL
DS	SECURITY ALARM DOOR SWITCH
K	SECURITY ALARM KEY PAD
R	SECURITY SYSTEM CARD ACCESS READER
WS	SECURITY ALARM WINDOW SWITCH
	SECURITY ALARM MOTION DETECTOR
CCTV	CLOSED CIRCUIT TV CAMERA
PTZ	PAN, TILT, ZOOM CAMERA LENS CONTROLS
GB	GLASS BREAK DETECTOR
FIRE ALARM SYSTEMS	
H 200 R	FIRE ALARM HEAT DETECTOR 135 FIXED TEMPERATURE UNLESS OTHERWISE NOTED. "200" – 200 FIXED TEMPERATURE "R" – FIXED TEMPERATURE RATE–OF–RISE TYPE
I	FIRE ALARM SMOKE DETECTOR PHOTOELECTRIC TYPE UNLESS OTHERWISE NOTED. "I" – IONIZATION TYPE.
D	FIRE ALARM DUCT SMOKE DETECTOR
FACP	FIRE ALARM CONTROL PANEL
FV	FIRE ALARM VENTILATION PANEL WITH GRAPHIC PANEL
FA	REMOTE FIRE ALARM ANNUNCIATOR PANEL
F	FIRE ALARM MASTER BOX
F	FIRE ALARM HORN, MOUNT UP 7'–6"
15 F	FIRE ALARM STROBE, MOUNT UP 6'–8" 15 = CANDELA RATING

SYMBOL	DESCRIPTION
15 F	FIRE ALARM HORN AND STROBE LIGHT COMBINATION, MOUNT UP 6'–8" 15 = CANDELA RATING
F	FIRE ALARM MANUAL PULL STATION, MOUNT UP 4'–0"
VSS	SPRINKLER VALVE SUPERVISORY SWITCH
SFS	SPRINKLER FLOW ALARM SWITCH
F	FIRE ALARM BELL
FB	WEATHERPROOF HI–INTENSITY FIRE ALARM STROBE LIGHT WITH HORN
PIR	PASSIVE INFRARED DETECTOR
R	SMOKE BEAM DETECTOR (RECEIVER)
T	SMOKE BEAM DETECTOR (TRANSMITTER)
	FIRE ALARM SMOKE DETECTOR REMOTE INDICATOR AND TEST SWITCH

ABBREVIATIONS	
A	AMPS
AC	ALTERNATING CURRENT
AFF	ABOVE FINISHED FLOOR
AFG	ABOVE FINISHED GRADE
AL	ALUMINUM
AIC	AMPERE INTERRUPTING CAPACITY
AMP	AMPERE
ATS	AUTOMATIC TRANSFER SWITCH
AUTO	AUTOMATIC
AUX	AUXILIARY
AWG	AMERICAN WIRE GAUGE
BKR	BREAKER
BLDG	BUILDING
C	CONDUIT
CB	CIRCUIT BREAKER
CGD	COMBUSTIBLE GAS DETECTOR
CKT	CIRCUIT
CLB	CURRENT LIMITING BREAKER
CLF	CURRENT LIMITING FUSE
CP	CONTROL PANEL
CPT	CONTROL POWER TRANSFORMER
CR	CONTROL RELAY
CS	CONTROL SWITCH/CONTROL STATION
CT	CURRENT TRANSFORMER
CU	COPPER
CWS	CONDUIT WALL SEAL
DC	DIRECT CURRENT
DIA	DIAMETER
DMU	DIGITAL METERING UNIT
DN	DOWN
EC	EMPTY CONDUIT
ELEC	ELECTRICAL

ABBREVIATIONS (CONTINUED)	
ELEV	ELEVATION
EM	EMERGENCY
ENCL	ENCLOSURE OR ENCLOSED
EQUIP	EQUIPMENT
EWC	ELECTRIC WATER COOLER
EWH	ELECTRIC WATER HEATER
EX	EXISTING
FO	FIBER OPTIC
FU	FUSE
GCP	GENERATOR CONTROL PANEL
GEN	GENERATOR
G, GND	GROUND
GFI	GROUND FAULT INTERRUPTER
GRS	GALVANIZED RIGID STEEL
HACR	HEATING & AIR CONDITIONING RATED
HH	HANDHOLE
HT	HEIGHT
HID	HIGH INTENSITY DISCHARGE
HP	HORSEPOWER
HZ	HERTZ
ID	IDENTIFICATION
INSTR	INSTRUMENT
K	KILO (PREFIX)
kcmil	1000 CIRCULAR MILS
KVA	KILOVOLT AMPERES
KW	KILOWATTS
LA	LIGHTNING ARRESTER
LTG	LIGHTING
LP	LIGHTING PANEL
LV	LOW VOLTAGE
MAX	MAXIMUM
MCB	MAIN CIRCUIT BREAKER
MCC	MOTOR CONTROL CENTER
MCP	MOTOR CIRCUIT PROTECTOR
MDP	MAIN DISTRIBUTION PANEL
MFR	MANUFACTURER
MH	MANHOLE
MIN	MINIMUM
MLO	MAIN LUGS ONLY
MTD	MOUNTED
MTS	MANUAL TRANSFER SWITCH
MV	MEDIUM VOLTAGE
N	NEUTRAL
NC	NORMALLY CLOSED
NO	NORMALLY OPEN OR NUMBER
NTS	NOT TO SCALE
OH	OVERHEAD
OL	OVERLOAD
PB	PULL BOX
PCP	PUMP CONTROL PANEL
PH	PHASE
PMH	POWER MANHOLE
PNL	PANEL OR PANELBOARD
PR	PAIR
PRI	PRIMARY
PT	POTENTIAL TRANSFORMER
PVC	POLYVINYL CHLORIDE
RECPT	RECEPTACLE
REQD	REQUIRED
QTY	QUANTITY
SA	SURGE ARRESTER
SEC	SECONDS OR SECONDARY
SH	SHIELDED OR SPACE HEATER
SHH	SIGNAL HANDHOLE
SPD	SURGE PROTECTIVE DEVICE
SS	STAINLESS STEEL
SV	SOLENOID VALVE
SW	SWITCH
SWBD	SWITCHBOARD
SWGR	SWITCHGEAR
TC	TIME TO CLOSE OR TRAY CABLE
TEL	TELEPHONE
TO	TIME TO OPEN
TS	TWISTED SHIELDED OR THERMAL SWITCH
TYP	TYPICAL
UG	UNDERGROUND
UPS	UNINTERRUPTIBLE POWER SUPPLY
V	VOLTS
VA	VOLT AMPS
VFD	VARIABLE FREQUENCY DRIVE
W	WATTS, WIDTH, WITH, WIRE
WP	WEATHERPROOF
XP	EXPLOSION PROOF
XFMR	TRANSFORMER

A
E–4
SHEET NO. WHERE DETAIL IS DRAWN

SYMBOL WHERE THERE IS A DETAIL

DETAIL A
1/4" = 1'–0" E–3
SHEET NO. WHERE THERE IS A DETAIL

SYMBOL WHERE DETAIL IS DRAWN

DETAIL SYMBOL

1
E–4
SHEET NO. WHERE SECTION IS DRAWN

SYMBOL WHERE THERE IS A SECTION

SECTION 1
1/4" = 1'–0" E–3
SHEET NO. WHERE SECTION IS TAKEN

SYMBOL WHERE SECTION IS DRAWN

SECTION SYMBOL

GENERAL NOTE
THIS IS A STANDARD LEGEND. SOME SYMBOLS MAY NOT APPEAR ON THE DRAWINGS.

STATE OF TEXAS
JOYSON VARGHESE
134792
LICENSED PROFESSIONAL ENGINEER
12/9/23

REV. NO.	DATE	DRWN	CHKD	REMARKS

DESIGNED BY: K. DINEESH
DRAWN BY: M. VISHNU
SHEET CHK'D BY: J. VARGHESE
CROSS CHK'D BY: S. MEHTA
APPROVED BY: J. VARGHESE
DATE: DECEMBER 2023

CDM Smith
8310-1 N Capital of Texas Hwy, Suite 250
Austin, TX 78731
Tel: (512) 346-1100
TBPELS Firm Registration No. F-3043

CITY OF GEORGETOWN, TEXAS

CEDAR BREAKS AND D B WOOD LIFT STATIONS

ELECTRICAL SYMBOLS, LEGEND, AND ABBREVIATIONS II

PROJECT NO. 2048–272644
FILE NAME: E002LSLG.DWG
SHEET NO.
E-2

XREFs: [CDMS_2234_South lake to South fork_Border J. VARGHESE– review stamp, CDMS_2234_ LS_Border] Images: []
Last saved by: VARGHESEJ2 Time 12/11/2023 12:00:36 PM
pw:\\cdmsmith-az02-pw.bentley.com:pw_pi1\2048\272644\04 Design Services NM_50%\09 Electrical\10 BIM_CADD\E002LSLG.dwg
© 2023 CDM SMITH ALL RIGHTS RESERVED.
REUSE OF DOCUMENTS: THESE DOCUMENTS AND DESIGNS PROVIDED BY PROFESSIONAL SERVICE, INCORPORATED HEREIN, ARE THE PROPERTY OF CDM SMITH AND ARE NOT TO BE USED, IN WHOLE OR PART, FOR ANY OTHER PROJECT WITHOUT THE WRITTEN AUTHORIZATION OF CDM SMITH.
Plotted: 12/13/2023 3:03:48 PM

AREA CLASSIFICATION LEGEND:

CLASS I DIVISION 1 | CLASS I DIVISION 2 | UNCLASSIFIED

(X) AREA TAG. REFER TO SHEET G-7 AND G-8.

GENERAL NOTES:

1. REFER TO SHEET G-7 AND G-8 FOR AREA CLASSIFICATION AND MATERIALS SCHEDULE.

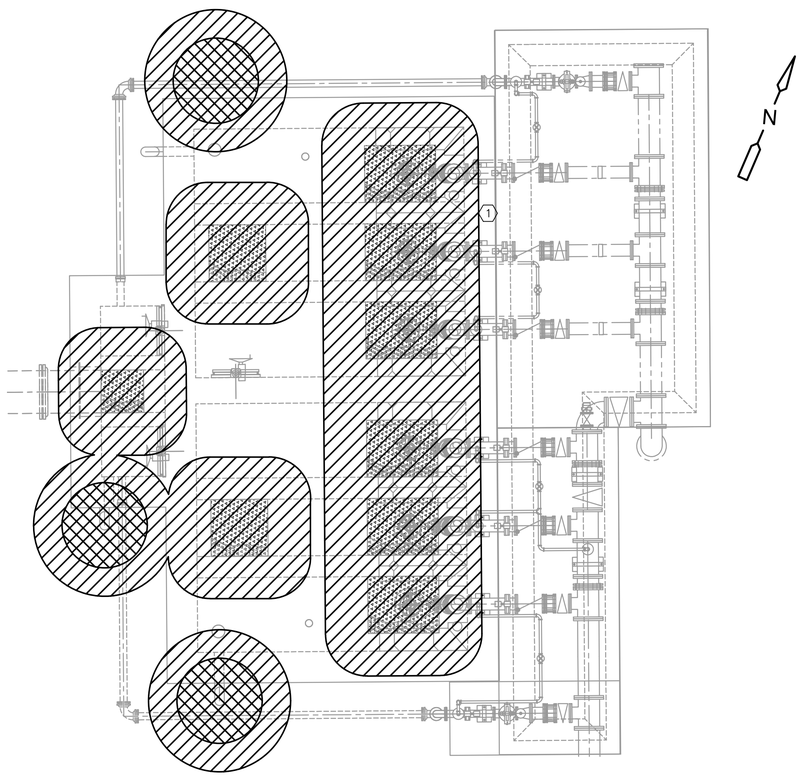

D B WOOD LIFT STATION AREA CLASSIFICATION

PLAN

3/16" = 1'- 0"

4 0 4 8

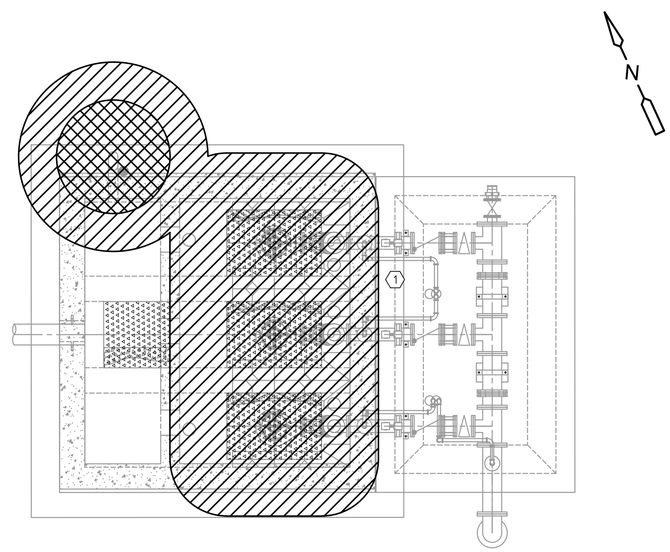

CEDAR BREAKS LIFT STATION AREA CLASSIFICATION

PLAN

1/4" = 1'- 0"

2 1 0 2 4

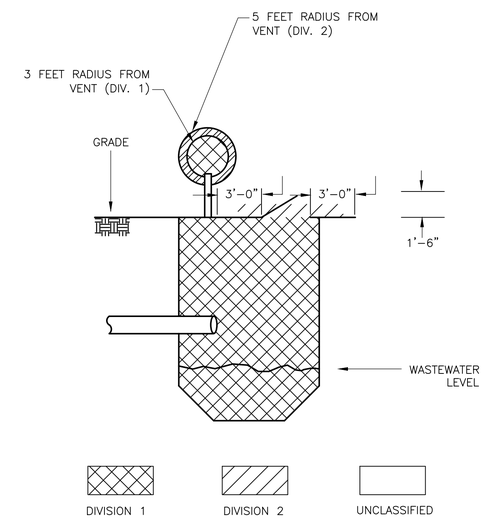

BELOW GRADE WET WELL

DETAIL A

NTS

STATE OF TEXAS
JOYSON VARGHESE
134792
LICENSED
PROFESSIONAL ENGINEER
12/9/23

REV. NO.	DATE	DRWN	CHKD	REMARKS

DESIGNED BY: K. DINEESH
DRAWN BY: M. VISHNU
SHEET CHK'D BY: J. VARGHESE
CROSS CHK'D BY: S. MEHTA
APPROVED BY: J. VARGHESE
DATE: DECEMBER 2023

CDM Smith
8310-1 N Capital of Texas Hwy, Suite 250
Austin, TX 78731
Tel: (512) 346-1100
TBPELS Firm Registration No. F-3043

CITY OF GEORGETOWN, TEXAS

CEDAR BREAKS AND D B WOOD LIFT STATIONS

CEDAR BREAKS AND D B WOOD LIFT STATION AREA CLASSIFICATION PLAN

PROJECT NO. 2048-272644
FILE NAME: E003ACPL.DWG

SHEET NO.

E-3

XREFs: [EWP002ST, EWP001ST, CDMS_2234_South lake to South fork_Border, J. VARGHESE- review stamp, MWP001LS, SWP000LS, CWP002LS, CEP004SS, SWP004LS, MWP002LS, CDMS_2234_ LS_Border, SWP001LS] Images: []
Last saved by: VARGHESEJ2 Time: 12/11/2023 12:02:10 PM
pw:\\cdmsmith-a202-pw.bentley.com:pw_pi\2048\272644\04 Design Services NM_505\09 Electrical\10 BIM_CADD\E003ACPL.dwg
©2023 CDM SMITH ALL RIGHTS RESERVED.
REUSE OF DOCUMENTS: THESE DOCUMENTS AND DESIGNS PROVIDED BY PROFESSIONAL SERVICE, INCORPORATED HEREIN, ARE THE PROPERTY OF CDM SMITH AND ARE NOT TO BE USED, IN WHOLE OR PART, FOR ANY OTHER PROJECT WITHOUT THE WRITTEN AUTHORIZATION OF CDM SMITH.

Plotted: 12/13/2023 3:03:53 PM

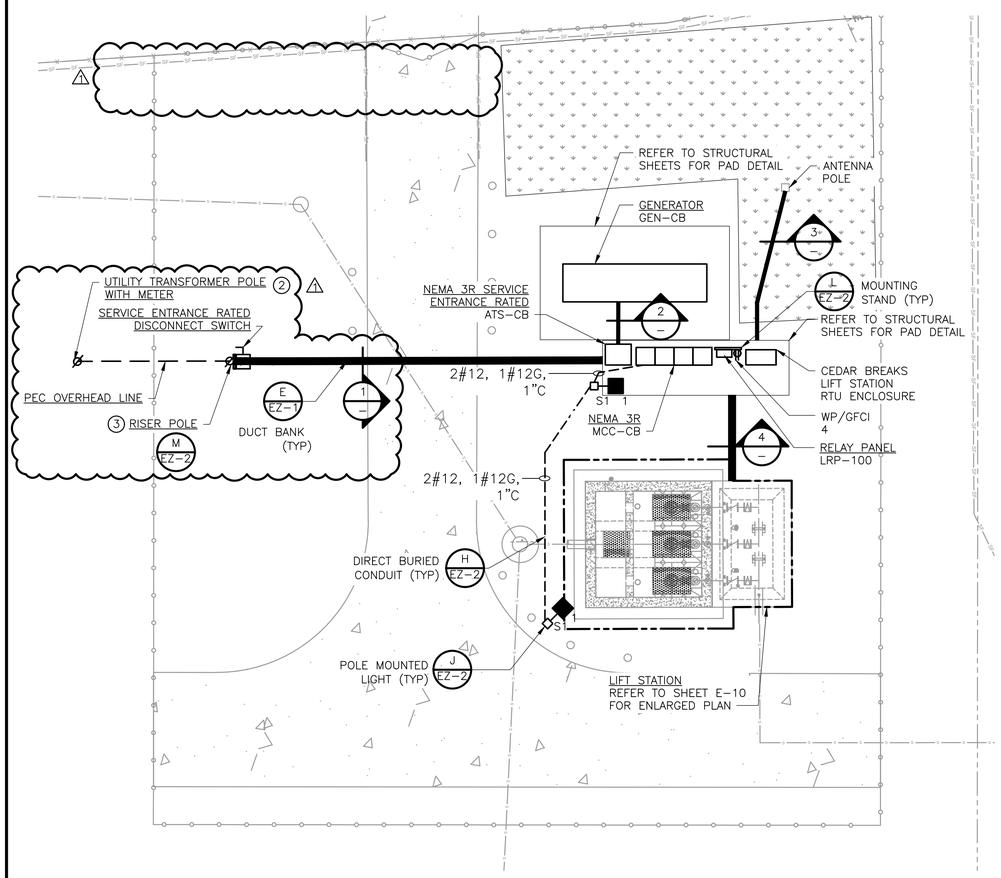

CEDAR BREAKS LIFT STATION ELECTRICAL SITE

PLAN

1" = 10'

5 0 10

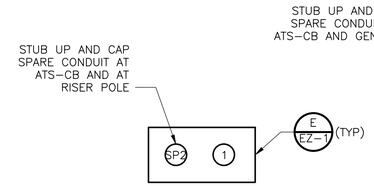

DUCTBANK SECTION 1 NTS

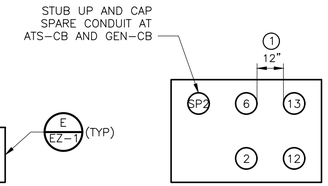

DUCTBANK SECTION 2 NTS

DUCTBANK SECTION 3 NTS

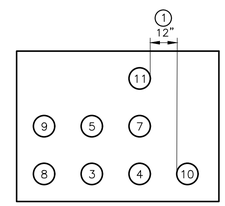

DUCTBANK SECTION 4 NTS

GENERAL NOTES:

1. REFER TO ELECTRICAL SHEET E-6 FOR ONE LINE DIAGRAM, E-8 FOR PANELBOARD AND LIGHTING FIXTURE SCHEDULE AND E-13 FOR RISER DIAGRAMS.
2. ALL LIGHTING FIXTURES AND RECEPTACLES SHALL BE WIRED BACK TO PANELBOARD LP-CB UNLESS OTHERWISE NOTED.
3. DUCTBANK SECTIONS JUST SHOWN THE CONDUITS REQUIRED AND DO NOT NECESSARILY REFLECT THE FINAL CONDUIT ARRANGEMENT. CONTRACTOR TO PROVIDE FINAL ARRANGEMENT IN AS-BUILT.

KEY NOTES:

1. MAINTAIN 12" SEPARATION BETWEEN POWER CONDUITS AND CONTROL/SIGNAL/COMMUNICATION CONDUITS.
2. PEC TO PROVIDE PRIMARY AND SECONDARY OVERHEAD LINE, POLE MOUNTED TRANSFORMER, CTS, AND METER ON A PEC PROVIDED POLE. COORDINATE FINAL LOCATION WITH PEC.
3. CONTRACTOR TO PROVIDE RISER POLE, WEATHERHEAD, RISER CONDUIT, CABLE, AND DISCONNECT SWITCH. PEC TO TERMINATE THE OVERHEAD LINE ON THE POLE.

CONDUIT SCHEDULE

ID NO.	CONDUIT TAG	REMARKS
1	UTCB-1B	
2	GENCB-1	
3	MCCCB-2	
4	MCCCB-3	
5	MCCCB-4	
6	MCCCB-5	
7	MCCCB-2C	
8	MCCCB-3C	
9	MCCCB-4C	
10	C-LIT100	
11	C-LCP100	
12	C-GENCBA	
13	C-GENCBB	
14	C-ANT	
SP2	SPARE 2"C	

STATE OF TEXAS
JOYSON VARGHESE
134792
LICENSED PROFESSIONAL ENGINEER
1/18/24

REV. NO.	DATE	DRWN	CHKD	REMARKS
1	1/18/24	JV	JV	ADDENDUM NO.3

DESIGNED BY: K. DINEESH
DRAWN BY: M. VISHNU
SHEET CHK'D BY: J. VARGHESE
CROSS CHK'D BY: S. MEHTA
APPROVED BY: J. VARGHESE
DATE: JANUARY 2024

CDM Smith
8310-1 N Capital of Texas Hwy, Suite 250
Austin, TX 78731
Tel: (512) 346-1100
TBPELS Firm Registration No. F-3043

CITY OF GEORGETOWN, TEXAS

CEDAR BREAKS AND D B WOOD LIFT STATIONS

CEDAR BREAKS LIFT STATION ELECTRICAL SITE PLAN

PROJECT NO. 2048-272644
FILE NAME: E004STPL.DWG

SHEET NO.
E-4

XREFs: [EWP002ST, EWP001ST, CDMS_2234_South_Iake_to_South_fork_Border_PP, J. VARGHESE- review stamp, MWP001LS, SWP001LS, SWP001LS, SWP000LS, CWP001LS, CDMS_2234_ LS_Border] Images: []
Last saved by: VARGHESEJ2 Time: 1/18/2024 1:32:43 PM
pw:\\cdmsmith-aa02-pw.bentley.com:pw_pi1\2048\272644\04 Design Services NM_508\09 Electrical\10 BIM_CADD\E004STPL.dwg
©2023 CDM SMITH ALL RIGHTS RESERVED.
REUSE OF DOCUMENTS: THESE DOCUMENTS AND DESIGNS PROVIDED BY PROFESSIONAL SERVICE, INCORPORATED HEREIN, ARE THE PROPERTY OF CDM SMITH AND ARE NOT TO BE USED, IN WHOLE OR PART, FOR ANY OTHER PROJECT WITHOUT THE WRITTEN AUTHORIZATION OF CDM SMITH.

Plotted: 1/18/2024 2:18:20 PM

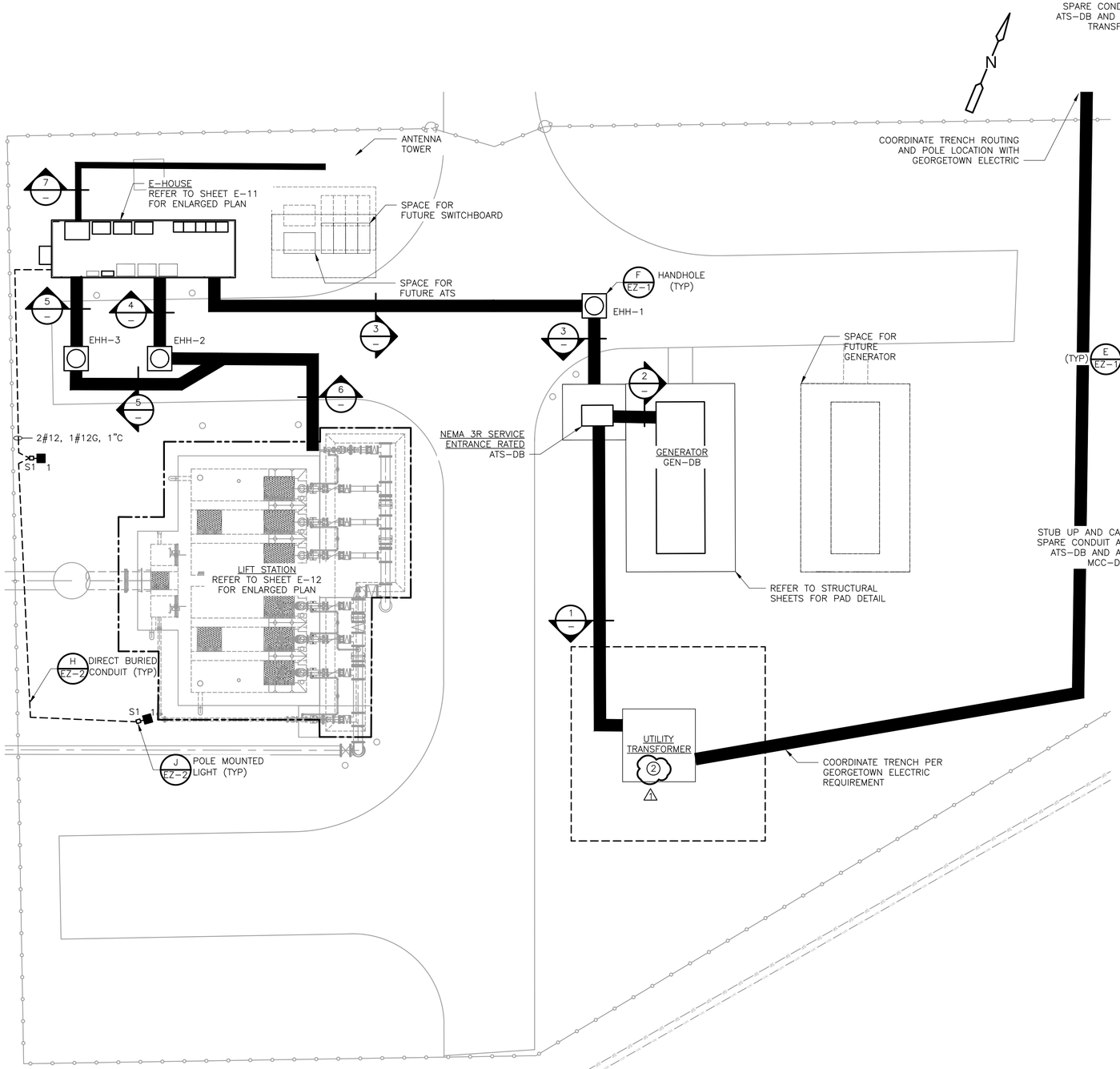

D B WOOD LIFT STATION ELECTRICAL SITE

PLAN

1" = 10'

5 0 10

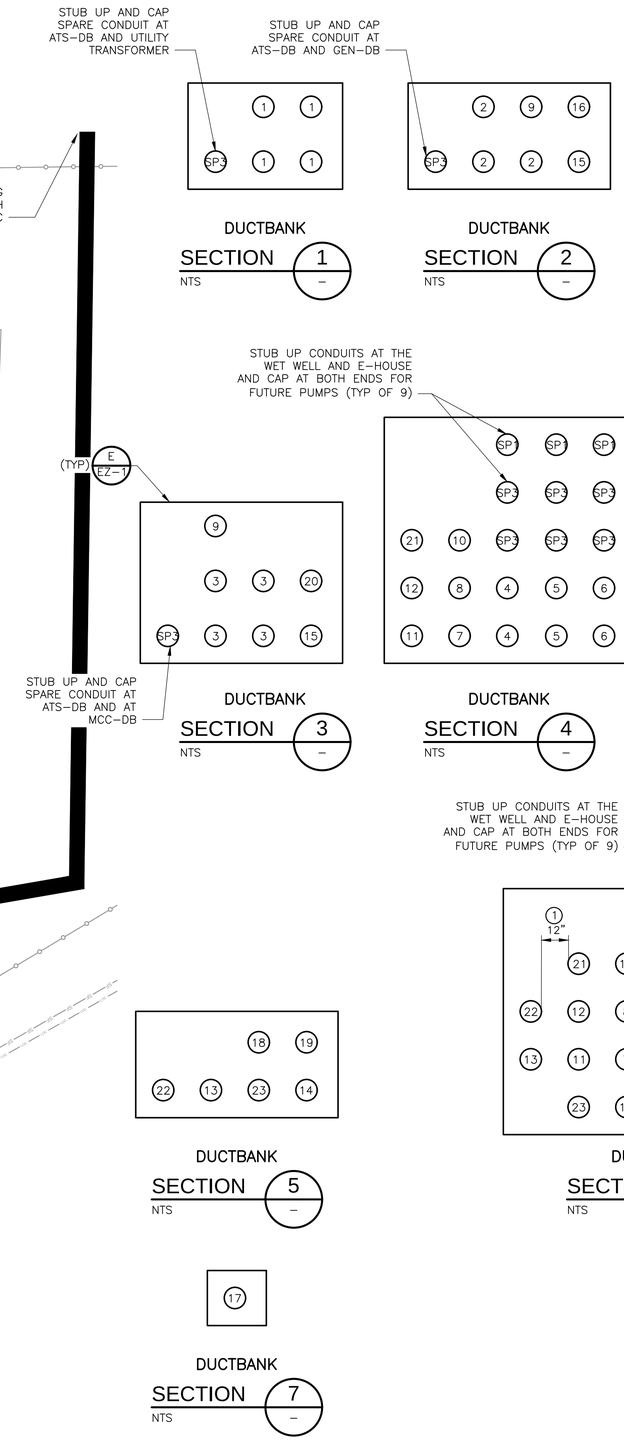

GENERAL NOTES:

1. REFER TO ELECTRICAL SHEET E-7 FOR ONE LINE DIAGRAM, E-8 FOR PANELBOARD AND LIGHTING FIXTURE SCHEDULE AND E-14 FOR RISER DIAGRAMS.
2. ALL LIGHTING FIXTURES AND RECEPTACLES SHALL BE WIRED BACK TO PANELBOARD LP-DB UNLESS OTHERWISE NOTED.
3. DUCTBANK SECTIONS JUST SHOWN THE CONDUITS REQUIRED AND DO NOT NECESSARILY REFLECT THE FINAL CONDUIT ARRANGEMENT. CONTRACTOR TO PROVIDE FINAL ARRANGEMENT IN AS-BUILT.

KEY NOTES:

1. MAINTAIN 12" SEPARATION BETWEEN POWER CONDUITS AND CONTROL/SIGNAL/COMMUNICATION CONDUITS.
2. COORDINATE WITH GEORGETOWN ELECTRIC AND PROVIDE TRANSFORMER PAD PER GEORGETOWN ELECTRIC REQUIREMENTS.

CONDUIT SCHEDULE

ID NO.	CONDUIT TAG	REMARKS
1	UTDB-1B	4 PARALLEL SETS
2	GENDB-1	3 PARALLEL SETS
3	ATSDB-1	4 PARALLEL SETS
4	MCCDB-2	2 PARALLEL SETS
5	MCCDB-3	2 PARALLEL SETS
6	MCCDB-4	2 PARALLEL SETS
7	MCCDB-5	
8	MCCDB-6	EMPTY CONDUIT FOR FUTURE PV-208
9	MCCDB-7	
10	MCCDB-2C	
11	MCCDB-3C	
12	MCCDB-4C	
13	C-LIT200	
14	C-LRP200	
15	C-GENDBA	
16	C-GENDBB	
17	C-ANT	
18	C-PV207	
19	C-PV208	EMPTY CONDUIT FOR FUTURE PV-208
20	C-GENDBC	
21	LPDB-5	
22	C-FUTURELIT	EMPTY CONDUIT FOR FUTURE LIT
23	C-FUTURELRP	EMPTY CONDUIT FOR FUTURE LRP
SP1	SPARE 1"C	
SP2	SPARE 2"C	
SP3	SPARE 3"C	

STATE OF TEXAS
JOYSON VARGHESE
134792
LICENSED PROFESSIONAL ENGINEER
1/18/24

REV. NO.	DATE	DRWN	CHKD	REMARKS
1	1/18/24	JV	JV	ADDENDUM NO.3

DESIGNED BY: K. DINEESH
DRAWN BY: M. VISHNU
SHEET CHK'D BY: J. VARGHESE
CROSS CHK'D BY: S. MEHTA
APPROVED BY: J. VARGHESE
DATE: JANUARY 2024

CDM Smith
8310-1 N Capital of Texas Hwy, Suite 250
Austin, TX 78731
Tel: (512) 346-1100
TBPELS Firm Registration No. F-3043

CITY OF GEORGETOWN, TEXAS

CEDAR BREAKS AND D B WOOD LIFT STATIONS

D B WOOD LIFT STATION ELECTRICAL SITE PLAN

PROJECT NO. 2048-272644
FILE NAME: E005STPL.DWG

SHEET NO.
E-5

XREFs: [EWP001ST, CDMS_2234_South lake to South fork_Border, J. VARGHESE- review stamp, SWP004LS, MWP002LS, CWP002LS, EWP002ST, CDMS_2234_LS_Border] Images: []
Last saved by: VARGHESEJ2 Time: 1/18/2024 1:41:32 PM
pw:\\admsmith-a202-pw.bentley.com:pw_pll\2048\272644\04 Design Services NM_50%\09 Electrical\10 BIM_CADD\E005STPL.dwg
© 2023 CDM SMITH ALL RIGHTS RESERVED.
REUSE OF DOCUMENTS: THESE DOCUMENTS AND DESIGNS PROVIDED BY PROFESSIONAL SERVICE, INCORPORATED HEREIN, ARE THE PROPERTY OF CDM SMITH AND ARE NOT TO BE USED, IN WHOLE OR PART, FOR ANY OTHER PROJECT WITHOUT THE WRITTEN AUTHORIZATION OF CDM SMITH.

Plotted: 1/18/2024 2:23:29 PM

KEY NOTES:

1. MOLDED CASE CIRCUIT BREAKER (MCCB) SHALL BE SIZED BY EQUIPMENT MANUFACTURER.
2. MOTOR CIRCUIT PROTECTOR (MCP) SHALL BE SIZED BY MOTOR CONTROL CENTER MANUFACTURER.
3. SEPARATELY DERIVED SYSTEM SHALL BE BONDED TO THE NEAREST GROUNDING ELECTRODE PER NEC.
4. PUMP MANUFACTURER PROVIDED CABLE.
5. LOCATED IN THE GENERATOR ENCLOSURE. PROVIDED AND INSTALLED BY THE GENERATOR MANUFACTURER.
6. PROVIDE SSRVS RATED FOR 60HP.

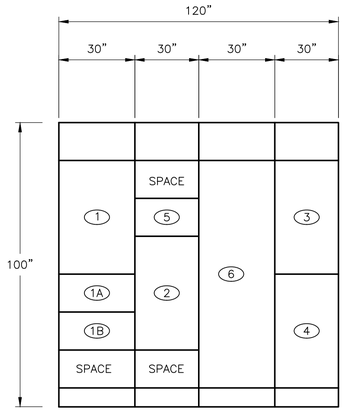

MOTOR CONTROL CENTER 'MCC-CB'

ELEVATION

NTS

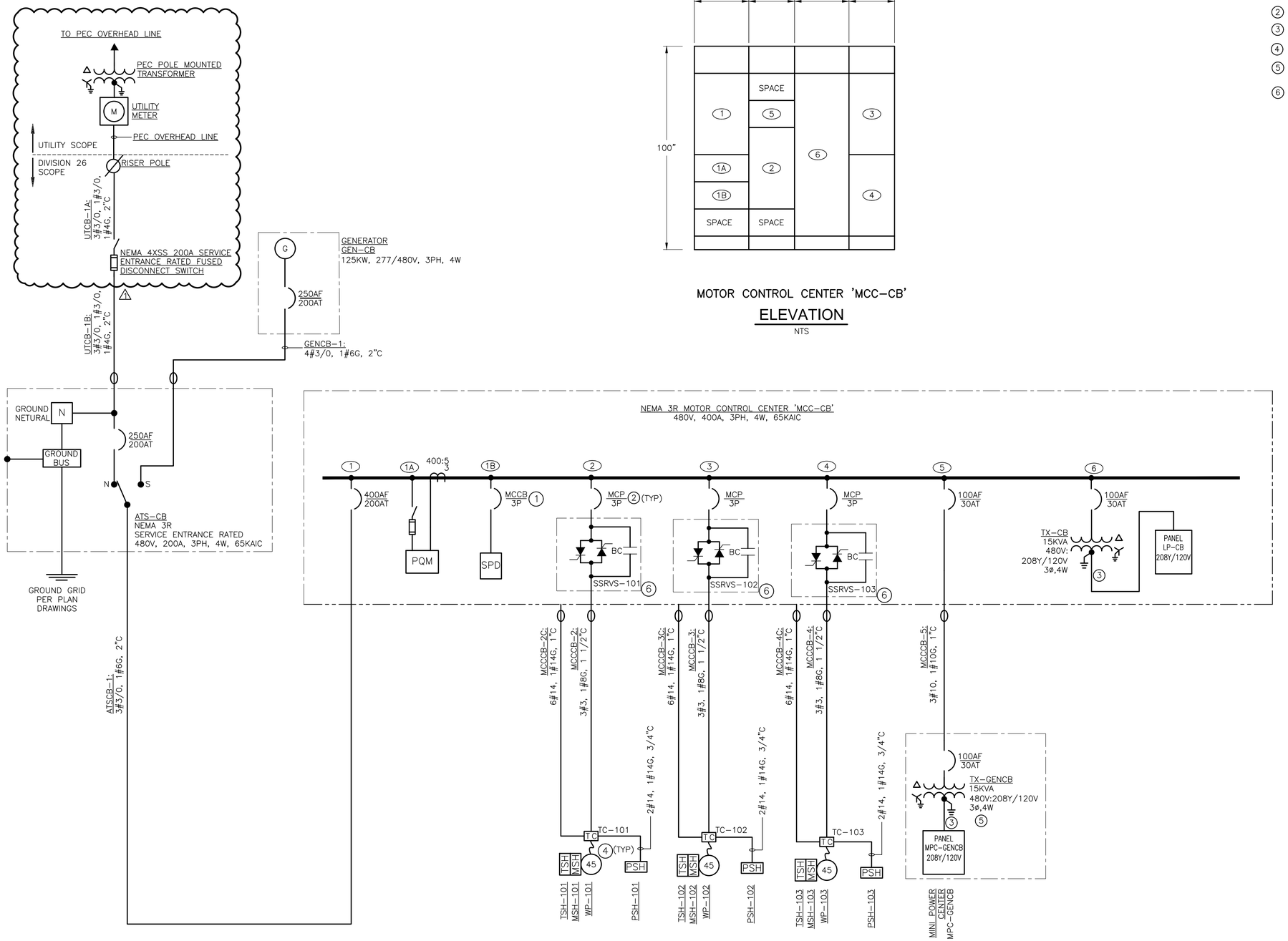

MOTOR CONTROL CENTER 'MCC-CB'

ONE-LINE DIAGRAM

NTS

STATE OF TEXAS
JOYSON VARGHESE
134792
LICENSED
PROFESSIONAL ENGINEER
1/18/24

REV. NO.	DATE	DRWN	CHKD	REMARKS
1	1/18/24	JV	JV	ADDENDUM NO.

DESIGNED BY: K. DINEESH
DRAWN BY: K. DINEESH
SHEET CHK'D BY: J. VARGHESE
CROSS CHK'D BY: S. MEHTA
APPROVED BY: J. VARGHESE
DATE: JANUARY 2024

CDM Smith
8310-1 N Capital of Texas Hwy, Suite 250
Austin, TX 78731
Tel: (512) 346-1100
TBPELS Firm Registration No. F-3043

CITY OF GEORGETOWN, TEXAS

CEDAR BREAKS AND D B WOOD LIFT STATIONS

CEDAR BREAKS LIFT STATION
MOTOR CONTROL CENTER 'MCC-CB'
ONE-LINE DIAGRAM AND ELEVATION

PROJECT NO. 2048-272644
FILE NAME: E006LSOL.DWG
SHEET NO.
E-6

XREFs: [CDMS_2234_South Ioke to South fork_Border, J. VARGHESE- review stamp, CDMS_2234_ LS_Border] images: []
Last saved by: VARGHESEJ2 Time: 1/18/2024 2:08:02 PM
pw:\\cdmsmith-az02-pw.bentley.com:pw_pf1\2048\272644\04 Design Services NM_50%\09 Electrical\10 BIM_CADD\E006LSOL.dwg
© 2023 CDM SMITH ALL RIGHTS RESERVED.
REUSE OF DOCUMENTS: THESE DOCUMENTS AND DESIGNS PROVIDED BY PROFESSIONAL SERVICE, INCORPORATED HEREIN, ARE THE PROPERTY OF CDM SMITH AND ARE NOT TO BE USED, IN WHOLE OR PART, FOR ANY OTHER PROJECT WITHOUT THE WRITTEN AUTHORIZATION OF CDM SMITH.

Plotted: 1/18/2024 2:24:01 PM

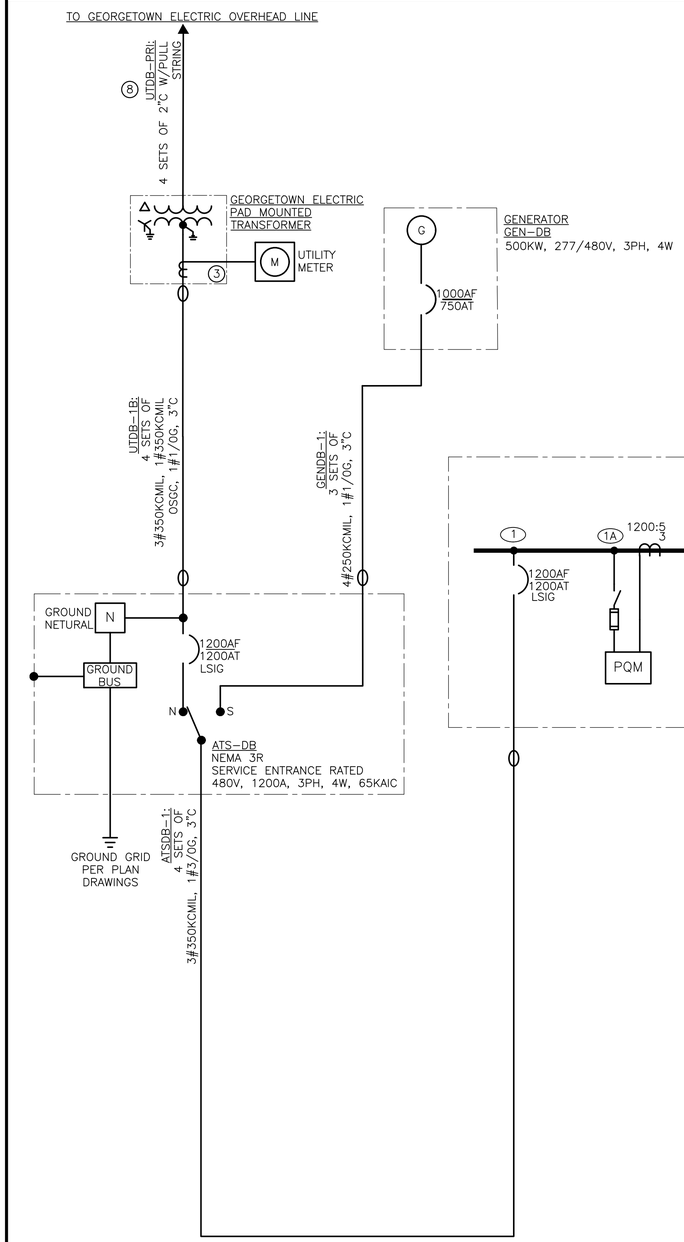

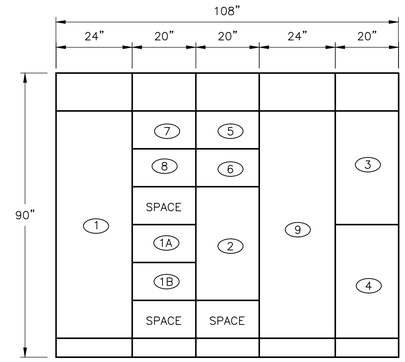

MOTOR CONTROL CENTER 'MCC-DB'

ELEVATION

NTS

KEY NOTES:

1. MOLDED CASE CIRCUIT BREAKER (MCCB) SHALL BE SIZED BY EQUIPMENT MANUFACTURER.
2. MOTOR CIRCUIT PROTECTOR (MCP) SHALL BE SIZED BY MOTOR CONTROL CENTER MANUFACTURER.
3. SEPARATELY DERIVED SYSTEM SHALL BE BONDED TO THE NEAREST GROUNDING ELECTRODE PER NEC.
4. PUMP MANUFACTURER PROVIDED CABLE.
5. STUB UP AND CAP CONDUITS AT BOTH ENDS FOR FUTURE USE.
6. COORDINATE HVAC REQUIREMENT WITH E-HOUSE MANUFACTURER.
7. LOCATED IN THE GENERATOR ENCLOSURE. PROVIDED AND INSTALLED BY THE GENERATOR MANUFACTURER.
8. APPROXIMATE 250 LINEAR FEET OF CONDUIT. COORDINATE EXACT TRENCH ROUTING AND POLE LOCATION WITH GEORGETOWN ELECTRIC.

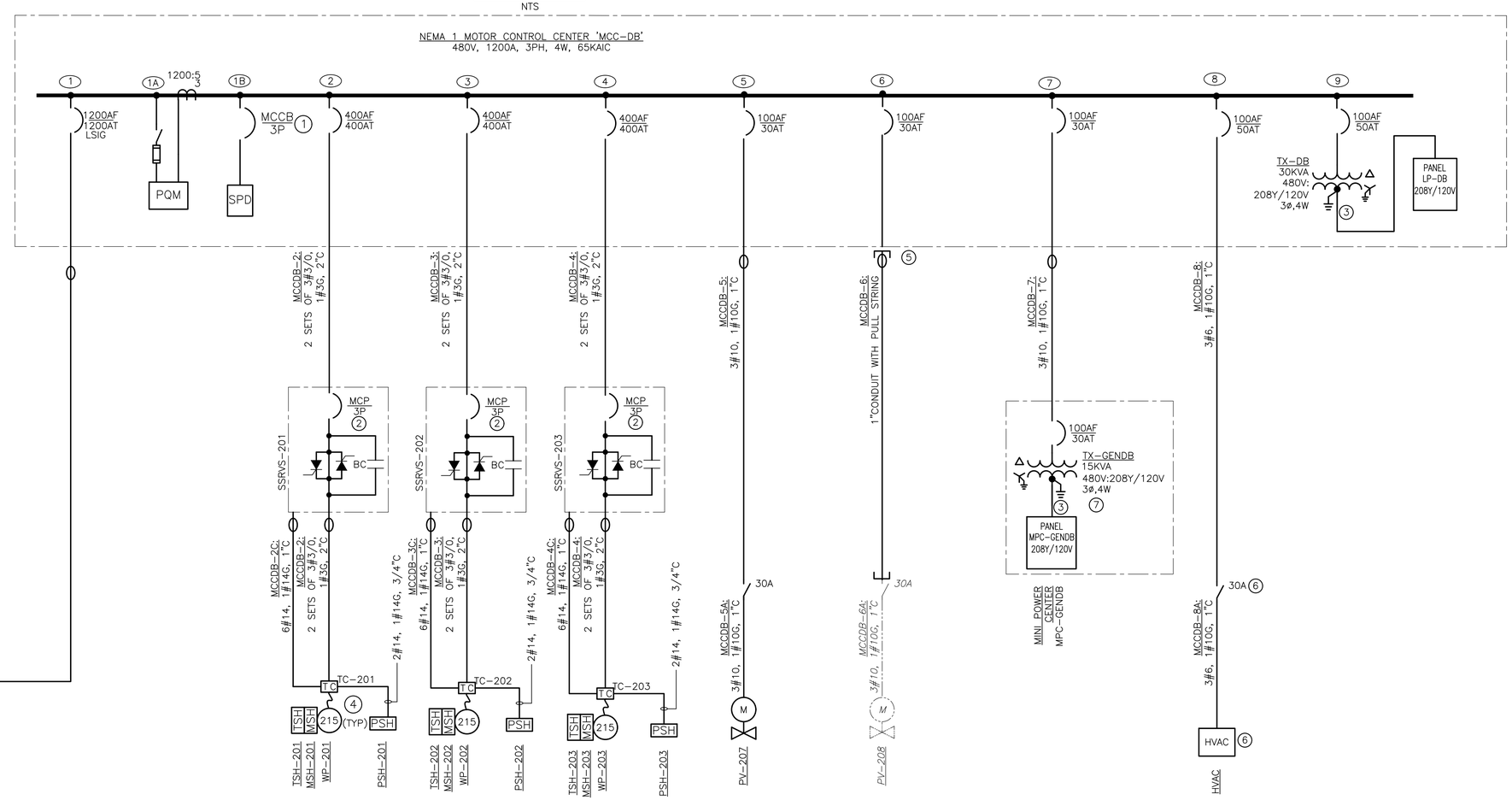

MOTOR CONTROL CENTER 'MCC-DB'

ONE-LINE DIAGRAM

NTS

STATE OF TEXAS
JOYSON VARGHESE
134792
LICENSED
PROFESSIONAL ENGINEER
12/9/23

REV. NO.	DATE	DRWN	CHKD	REMARKS

DESIGNED BY: K. DINEESH
DRAWN BY: K. DINEESH
SHEET CHK'D BY: J. VARGHESE
CROSS CHK'D BY: S. MEHTA
APPROVED BY: J. VARGHESE
DATE: DECEMBER 2023

CDM Smith
8310-1 N Capital of Texas Hwy, Suite 250
Austin, TX 78731
Tel: (512) 346-1100
TBPELS Firm Registration No. F-3043

CITY OF GEORGETOWN, TEXAS

CEDAR BREAKS AND D B WOOD LIFT STATIONS

DB WOOD LIFT STATION
MOTOR CONTROL CENTER 'MCC-DB'
ONE-LINE DIAGRAM AND ELEVATION

PROJECT NO. 2048-272644
FILE NAME: E007LSOL.DWG
SHEET NO.
E-7

XREFs: [CDMS_2234_South lake to South fork_Border, J. VARGHESE- review stamp, CDMS_2234_ LS_Border] Images: []
Last saved by: VARGHESEJ2 Time: 12/11/2023 12:01:09 PM
pw:\\cdmsmith-azo2-pw.bentley.com:pw_pi\2048\272644\04 Design Services NM_50%\09 Electrical\10 BIM_CADD\E007LSOL.dwg
© 2023 CDM SMITH ALL RIGHTS RESERVED.
REUSE OF DOCUMENTS: THESE DOCUMENTS AND DESIGNS PROVIDED BY PROFESSIONAL SERVICE, INCORPORATED HEREIN, ARE THE PROPERTY OF CDM SMITH AND ARE NOT TO BE USED, IN WHOLE OR PART, FOR ANY OTHER PROJECT WITHOUT THE WRITTEN AUTHORIZATION OF CDM SMITH.
Plotted: 12/13/2023 3:04:09 PM

KEY NOTES:

1. PROVIDE INTEGRAL SURGE PROTECTION.

PANELBOARD LP-CB (1)

60 AMP MAIN BREAKER — **100** AMP BUS RATING — **30** POLES
208/120 VOLTS — **3** PHASE — **4** WIRE — **60 Hz.**
LOCATION: **MCC-CB**
10 KA SHORT CIRCUIT RATING
ENCLOSURE RATING: **NEMA 1**
ELECTRONIC GRADE: **NO**
MOUNTING: **SURFACE**

CIRCUIT NO.	DESCRIPTION	LOAD KVA PHASE A	LOAD KVA PHASE B	LOAD KVA PHASE C	BREAKER AMPS/ POLES	NOTES	CIRCUIT NO.	DESCRIPTION	LOAD KVA PHASE A	LOAD KVA PHASE B	LOAD KVA PHASE C	BREAKER AMPS/ POLES	NOTES
1	SITE LIGHT	0.23			20 /1	7	2	RELAY PANEL LRP-100	1.00			20 /1	7
3	CEDAR BREAKS LS RTU ENCLOSURE		1.00		20 /1	7	4	EXTERIOR RECEPTACLE		0.18		20 /1	7
5	SPARE				20 /1		6	SPARE				20 /1	
7	SPARE				20 /1		8	SPARE				20 /1	
9	SPARE				20 /1		10	SPARE				20 /1	
11	SPACE				/1		12	SPACE				/1	
13	SPACE				/1		14	SPACE				/1	
15	SPACE				/1		16	SPACE				/1	
17	SPACE				/1		18	SPACE				/1	
19	SPACE				/1		20	SPACE				/1	
21	SPACE				/1		22	SPACE				/1	
23	SPACE				/1		24	SPACE				/1	
25	SPACE				/1		26	SPACE				/1	
27	SPACE				/1		28	SPACE				/1	
29	SPACE				/1		30	SPACE				/1	
	TOTAL PHASE KVA THIS SIDE	0.23	1.00	0.00				TOTAL PHASE KVA THIS SIDE	1.00	0.18	0.00		
								TOTAL KVA PER PHASE	1.23	1.18	0.00		
								TOTAL THREE PHASE KVA	2.41				

NOTES:
1. PROVIDE LOCKING HARDWARE
3. 30 ma GFI CIRCUIT BREAKER FOR EQUIPMENT PROTECTION ONLY (HEAT TRACE)
5. BRANCH CIRCUIT WIRING: 3/4"C, 3#12 & 1#12G
7. BRANCH CIRCUIT WIRING: 3/4"C, 2#12 & 1#12G
9.

NOTES CONT.:
2. 5 ma GROUND FAULT INTERRUPTER (GFI) CIRCUIT BREAKER
4. PROVIDE LOCKING HARDWARE & PAINT BREAKER HANDLE RED (FACP)
6. BRANCH CIRCUIT WIRING: 3/4'C, 3#10 & 1#10G
8. BRANCH CIRCUIT WIRING: 3/4'C, 2#8 & 1#8G
10.

PANELBORD LP–CB
SCHEDULE
NTS

PANELBOARD LP-DB (1)

60 AMP MAIN BREAKER — **100** AMP BUS RATING — **30** POLES
208/120 VOLTS — **3** PHASE — **4** WIRE — **60 Hz.**
LOCATION: **MCC-DB**
10 KA SHORT CIRCUIT RATING
ENCLOSURE RATING: **NEMA 1**
ELECTRONIC GRADE: **NO**
MOUNTING: **SURFACE**

CIRCUIT NO.	DESCRIPTION	LOAD KVA PHASE A	LOAD KVA PHASE B	LOAD KVA PHASE C	BREAKER AMPS/ POLES	NOTES	CIRCUIT NO.	DESCRIPTION	LOAD KVA PHASE A	LOAD KVA PHASE B	LOAD KVA PHASE C	BREAKER AMPS/ POLES	NOTES
1	SITE LIGHT	0.23			20 /1	7	2	RELAY PANEL LRP-200	1.00			20 /1	7
3	DB WOOD LS RTU ENCLOSURE		1.00		20 /1	7	4	ELECTRICAL BLDG LIGHTS		0.30		20 /1	7
5	LIFT STATION RECEPTACLE			0.36	20 /1		6	EXTERIOR ELEC BLDG RECEPTACLE			0.72	20 /1	7
7	SPARE				20 /1		8	ELECTRICAL BLDG RECEPTACLE	0.36			20 /1	7
9	SPARE				20 /1		10	SPARE				20 /1	
11	SPACE				/1		12	SPACE				/1	
13	SPACE				/1		14	SPACE				/1	
15	SPACE				/1		16	SPACE				/1	
17	SPACE				/1		18	SPACE				/1	
19	SPACE				/1		20	SPACE				/1	
21	SPACE				/1		22	SPACE				/1	
23	SPACE				/1		24	SPACE				/1	
25	SPACE				/1		26	SPACE				/1	
27	SPACE				/1		28	SPACE				/1	
29	SPACE				/1		30	SPACE				/1	
	TOTAL PHASE KVA THIS SIDE	0.23	1.00	0.36				TOTAL PHASE KVA THIS SIDE	1.36	0.30	0.72		
								TOTAL KVA PER PHASE	1.59	1.30	1.08		
								TOTAL THREE PHASE KVA	3.97				

NOTES:
1. PROVIDE LOCKING HARDWARE
3. 30 ma GFI CIRCUIT BREAKER FOR EQUIPMENT PROTECTION ONLY (HEAT TRACE)
5. BRANCH CIRCUIT WIRING: 3/4"C, 3#12 & 1#12G
7. BRANCH CIRCUIT WIRING: 3/4"C, 2#12 & 1#12G

NOTES CONT.:
2. 5 ma GROUND FAULT INTERRUPTER (GFI) CIRCUIT BREAKER
4. PROVIDE LOCKING HARDWARE & PAINT BREAKER HANDLE RED (FACP)
6. BRANCH CIRCUIT WIRING: 3/4'C, 3#10 & 1#10G
8. BRANCH CIRCUIT WIRING: 3/4'C, 2#8 & 1#8G

PANELBORD LP–DB
SCHEDULE
NTS

LIGHTING FIXTURE SCHEDULE

TYPE	LAMP TYPE / SOURCE	MOUNTING	DESCRIPTION	MAXIMUM WATTAGE COMSUMPTION	MINIMUM LUMEN OUTPUT	VOLTAGE	ACCEPTABLE MANUFACTURER/MODEL	REMARKS
B	LED	PENDANT / SURFACE	INDUSTRIAL LINEAR BAY LIGHT, CRI ABOVE 80, 3500K COLOR TEMPERATURE, DAMP LOCATION LISTED, 4 FOOT LENGTH, WIDE DISTRIBUTION, L70 HOURS = 170,000 @25 DEGREES CELSIUS	33	8839	MVOLT	EATON (METALUX) - 4ILED-LD5-5-W-FL-UNV-L835-CD1-U ACUITY (LITHONIA) HUBBELL INDUSTRIAL	PROVIDE REQUIRED ACCESSORIES FOR PENDANT MOUNTING
BE	LED	PENDANT / SURFACE	INDUSTRIAL LINEAR BAY LIGHT, CRI ABOVE 80, 3500K COLOR TEMPERATURE, DAMP LOCATION LISTED, 4 FOOT LENGTH, WIDE DISTRIBUTION, L70 HOURS = 170,000 @25 DEGREES CELSIUS, EMERGENCY LUMEN OUTPUT MINIMUM - 2170, INTERGRAL 90 MINUTE EMERGENCY BACKUP	33	8839	MVOLT	EATON (METALUX) - 4ILED-LD5-5-W-FL-UNV-L835-EL14W-CD1-U ACUITY (LITHONIA) HUBBELL INDUSTRIAL	PROVIDE REQUIRED ACCESSORIES FOR PENDANT MOUNTING
W	LED	SURFACE	OUTDOOR WALL MOUNTED FIXTURE, CRI =70, 4000K COLOR TEMPERATURE, BRONZE COLOR, WET LOCATION LISTED, INTEGRAL PHOTOCELL, INTEGRAL 90 MINUTE EMERGENCY BACKUP. L70 HOURS =200,000 @ 40 DEGREES CELSIUS	22	2151	120	HUBBELL OUTDOOR - TRP1-12L-20-4K7-4-U-DB-PCU-E ACUITY (LITHONIA) EATON (LUMARK)	
S1	LED	POLE	FIXTURE WITH 20 FEET SQUARE POLE COMBO TYPE SUITABLE FOR OUTDOOR SITE LIGHTING, INTEGRAL PHOTOCELL, 4000K, WET LOCATION LISTED	115	12674	120	HUBBELL-A-12-N-T3-7PR-S20	PROVIDE REQUIRED ACCESSORIES FOR POLE MOUNTING

LIGHTING FIXTURE
SCHEDULE
NTS

STATE OF TEXAS
JOYSON VARGHESE
134792
LICENSED
PROFESSIONAL ENGINEER
12/9/23

REV. NO.	DATE	DRWN	CHKD	REMARKS

DESIGNED BY: K. DINEESH
DRAWN BY: M. VISHNU
SHEET CHK'D BY: J. VARGHESE
CROSS CHK'D BY: S. MEHTA
APPROVED BY: J. VARGHESE
DATE: DECEMBER 2023

CDM Smith
8310-1 N Capital of Texas Hwy, Suite 250
Austin, TX 78731
Tel: (512) 346-1100
TBPELS Firm Registration No. F-3043

CITY OF GEORGETOWN, TEXAS

CEDAR BREAKS AND D B WOOD LIFT STATIONS

CEDAR BREAKS AND DB WOOD LIFT STATION
PANELBOARD AND LIGHTING FIXTURE SCHEDULE

PROJECT NO. 2048–272644
FILE NAME: E008LSPB.DWG
SHEET NO.
E-8

XREFs: [CDMS_2234_South lake to South fork_Border, J. VARGHESE– review stamp, CDMS_2234_ LS_Border] Images: []
Last saved by: VARGHESEJ2 Time: 12/11/2023 11:57:42 AM
pw:\\cdmsmith–a202–pw.bentley.com:pw_pi1\2048\272644\04 Design Services NM_50%\09 Electrical\10 BIM_CADD\E008LSSH.dwg
©2023 CDM SMITH ALL RIGHTS RESERVED.
REUSE OF DOCUMENTS: THESE DOCUMENTS AND DESIGNS PROVIDED BY PROFESSIONAL SERVICE, INCORPORATED HEREIN, ARE THE PROPERTY OF CDM SMITH AND ARE NOT TO BE USED, IN WHOLE OR PART, FOR ANY OTHER PROJECT WITHOUT THE WRITTEN AUTHORIZATION OF CDM SMITH.
Plotted: 12/13/2023 3:29:24 PM

GENERAL NOTES:

1. LOCATION OF GROUNDING LOOP SHALL BE AT A MINIMUM OF 30" FROM ANY FOUNDATION WALLS AND COLUMNS. GROUNDING LOOP SHALL BE BURIED 30" BELOW GRADE LEVEL.

KEY NOTES:

1. BOND #4/0 BARE COPPER WIRE TO STRUCTURAL STEEL.
2. BOND #4/0 BARE COPPER WIRE TO EQUIPMENT ENCLOSURE.

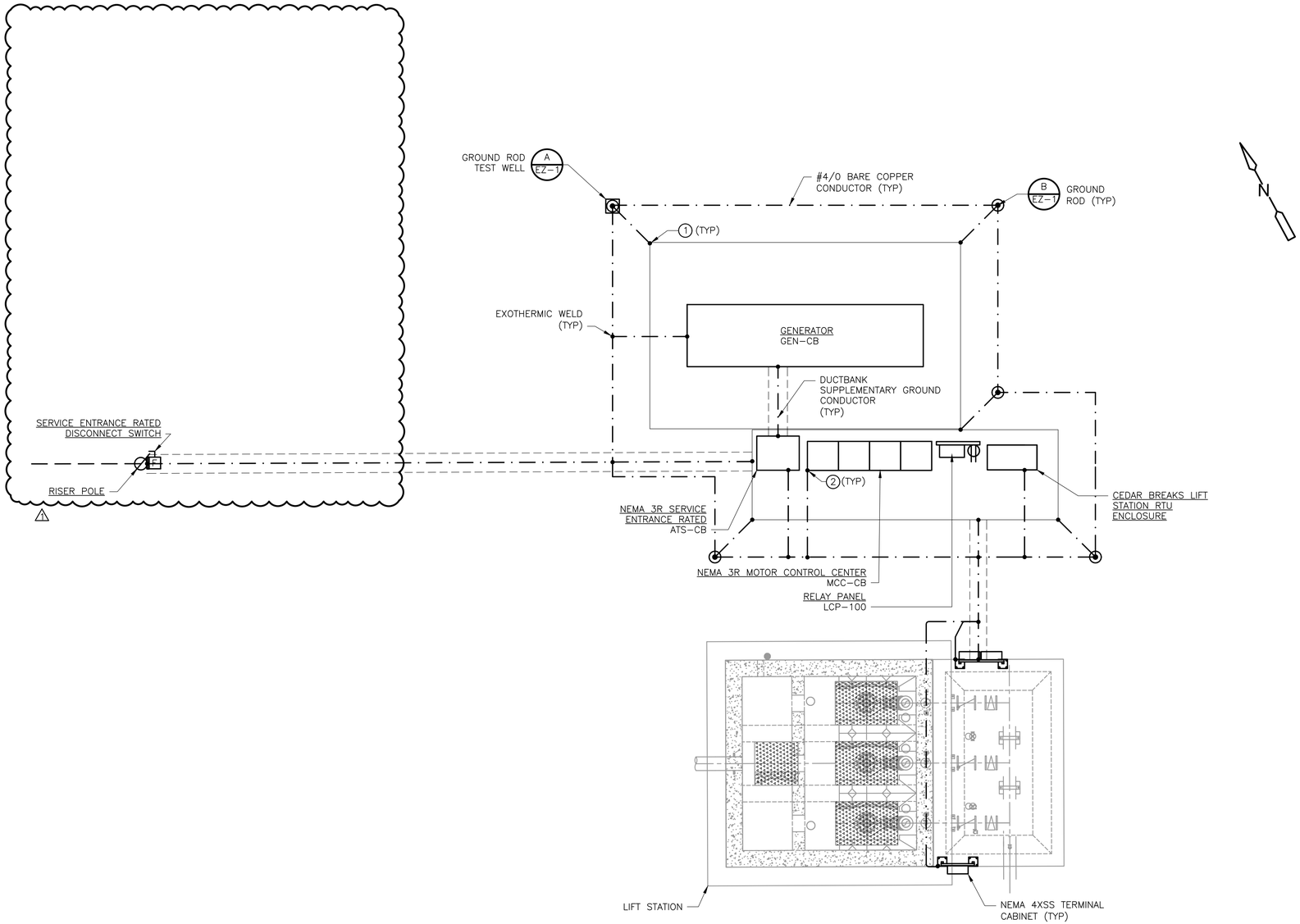

CEDAR BREAKS LIFT STATION ELECTRICAL SITE GROUNDING

PLAN

1" = 5'

2.5 0 5

STATE OF TEXAS
JOYSON VARGHESE
134792
LICENSED
PROFESSIONAL ENGINEER
1/18/24

REV. NO.	DATE	DRWN	CHKD	REMARKS
1	1/18/24	JV	JV	ADDENDUM NO.3

DESIGNED BY: K. DINEESH
DRAWN BY: M. VISHNU
SHEET CHK'D BY: J. VARGHESE
CROSS CHK'D BY: S. MEHTA
APPROVED BY: J. VARGHESE
DATE: JANUARY 2024

CDM Smith
8310-1 N Capital of Texas Hwy, Suite 250
Austin, TX 78731
Tel: (512) 346-1100
TBPELS Firm Registration No. F-3043

CITY OF GEORGETOWN, TEXAS

CEDAR BREAKS AND D B WOOD LIFT STATIONS

CEDAR BREAKS LIFT STATION
ELECTRICAL SITE GROUNDING

PROJECT NO. 2048-272644
FILE NAME: E009LSPL.DWG

SHEET NO.
E-9

XREFs: [CDMS_2234_South lake to South fork_Border, J. VARGHESE- review stamp, EWP002ST, EWP001ST, CEP000SS_do not use, CEP002SS, CEZ001SV, CWP003ST, MWP001LS, SWP000LS, SWP001LS, CDMS_2234_ LS_Border] Images: []
Last saved by: VARGHESEJ2 Time: 1/18/2024 2:27:54 PM
pw:\\cdmsmith-az02-pw.bentley.com:pw_pi1\2048\272644\04 Design Services NM_50%\09 Electrical\10 BIM_CADD\E009LSPL.dwg
© 2023 CDM SMITH ALL RIGHTS RESERVED.
REUSE OF DOCUMENTS: THESE DOCUMENTS AND DESIGNS PROVIDED BY PROFESSIONAL SERVICE, INCORPORATED HEREIN, ARE THE PROPERTY OF CDM SMITH AND ARE NOT TO BE USED, IN WHOLE OR PART, FOR ANY OTHER PROJECT WITHOUT THE WRITTEN AUTHORIZATION OF CDM SMITH.
Plotted: 1/18/2024 2:37:41 PM

KEY NOTES:

1. PROVIDE TRIP HAZARD PROTECTION FOR PUMP CABLES ROUTED TO WETWELL.

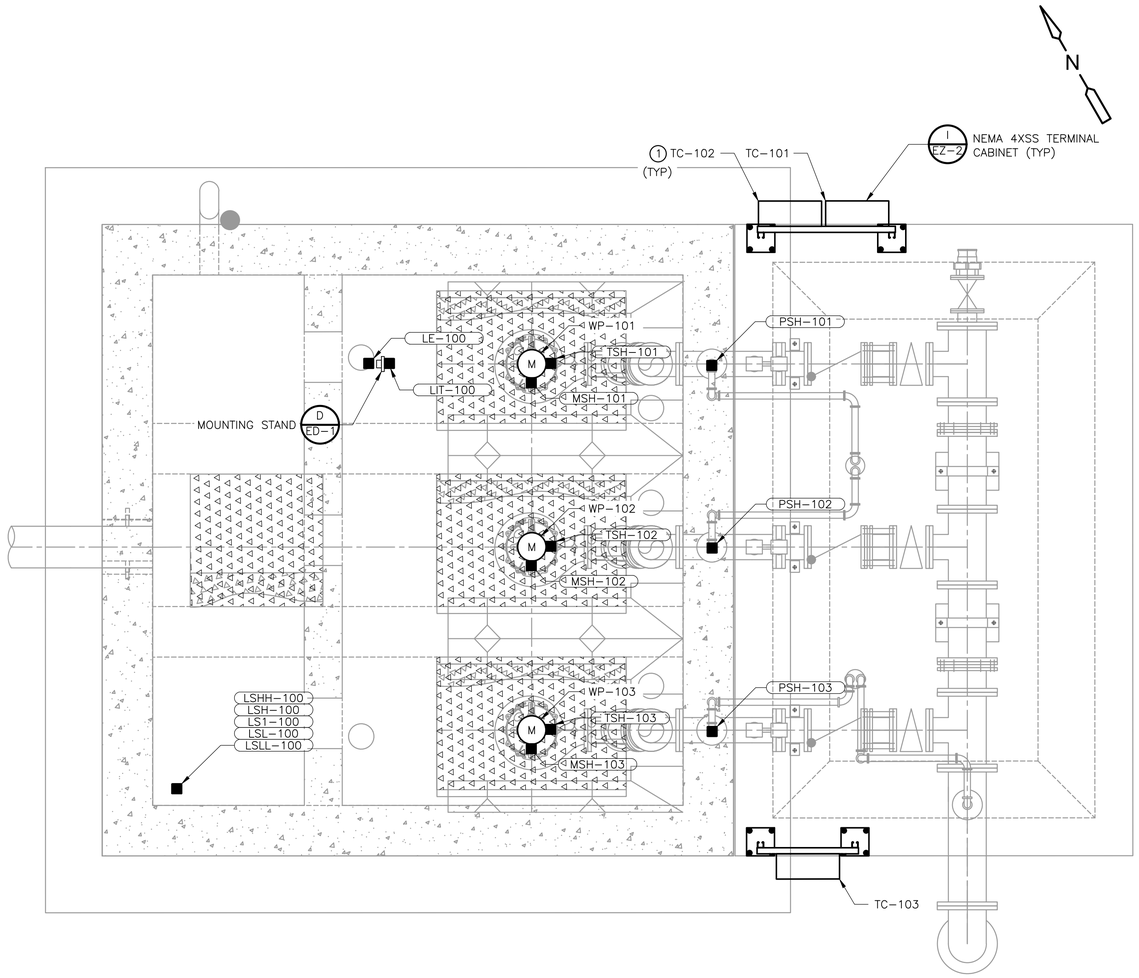

CEDAR BREAKS LIFT STATION ELECTRICAL

PLAN

1/2" = 1'- 0"

1 0 1 2

STATE OF TEXAS
JOYSON VARGHESE
134792
LICENSED
PROFESSIONAL ENGINEER
12/9/23

REV. NO.	DATE	DRWN	CHKD	REMARKS

DESIGNED BY: K. DINEESH
DRAWN BY: M. VISHNU
SHEET CHK'D BY: J. VARGHESE
CROSS CHK'D BY: S. MEHTA
APPROVED BY: J. VARGHESE
DATE: DECEMBER 2023

CDM Smith
8310-1 N Capital of Texas Hwy, Suite 250
Austin, TX 78731
Tel: (512) 346-1100
TBPELS Firm Registration No. F-3043

CITY OF GEORGETOWN, TEXAS

CEDAR BREAKS AND D B WOOD LIFT STATIONS

CEDAR BREAKS LIFT STATION
ELECTRICAL PLAN

PROJECT NO. 2048-272644
FILE NAME: E010LSPL.DWG

SHEET NO.
E-10

Plotted: 12/13/2023 3:04:22 PM

XREFs: [CDMS_2234_South lake to South fork_Border, J. VARGHESE- review stamp, MWP001LS, SWP001LS, SWP000LS, CDMS_2234_ LS_Border] Images: []
Last saved by: VARGHESEJ2 Time: 12/11/2023 11:53:28 AM
pw:\\cdmsmith-azc2-pw.bentley.com:pw_pi\2048\272644\04 Design Services NM_50%\09 Electrical\10 BIM_CADD\E010LSPL.dwg
©2023 CDM SMITH ALL RIGHTS RESERVED.
REUSE OF DOCUMENTS: THESE DOCUMENTS AND DESIGNS PROVIDED BY PROFESSIONAL SERVICE, INCORPORATED HEREIN, ARE THE PROPERTY OF CDM SMITH AND ARE NOT TO BE USED, IN WHOLE OR PART, FOR ANY OTHER PROJECT WITHOUT THE WRITTEN AUTHORIZATION OF CDM SMITH.

GENERAL NOTES:

1. FINAL EQUIPMENT LAYOUT SHALL BE COORDINATED WITH E-HOUSE MANUFACTURER.
2. LOCATION OF GROUNDING LOOP SHALL BE AT A MINIMUM OF 30" FROM ANY FOUNDATION WALLS AND COLUMNS. GROUNDING LOOP SHALL BE BURIED 30" BELOW GRADE LEVEL.

KEY NOTES:

1. BOND #4/0 BARE COPPER WIRE TO STRUCTURAL STEEL.
2. BOND #4/0 BARE COPPER WIRE TO EQUIPMENT ENCLOSURE.
3. COIL 6' WIRE FOR CONNECTION TO FUTURE PUMP AND EQUIPMENT.
4. E-HOUSE MANUFACTURER TO PROVIDE SPACE FOR INSTALLING FUTURE 215HP SSRVS.
5. COORDINATE WITH DIVISION 40 CONTRACTOR FOR FINAL EQUIPMENT DIMENSION.

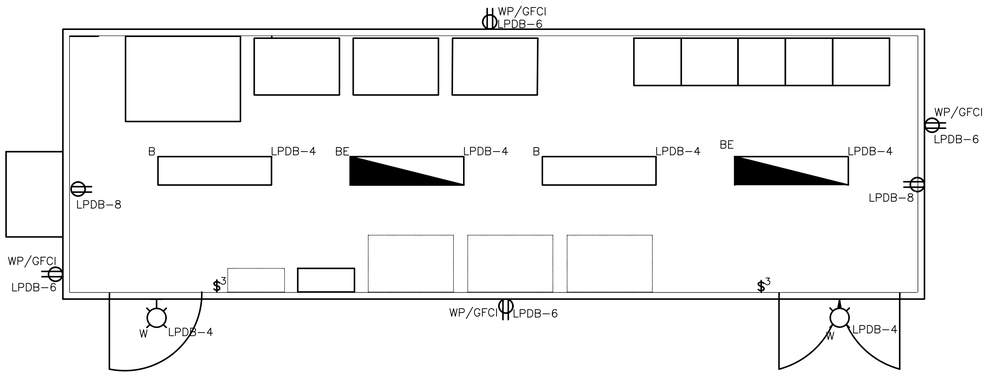

D B WOOD LIFT STATION E-HOUSE LIGHTING AND RECEPTACLE PLAN

3/8" = 1'- 0"

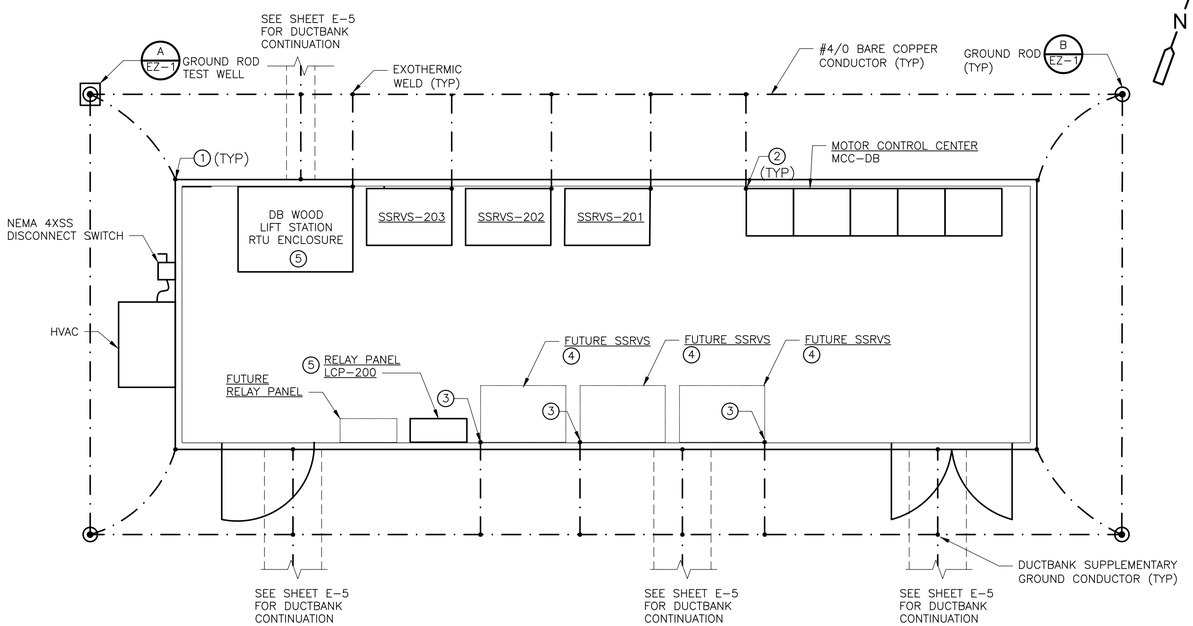

D B WOOD LIFT STATION E-HOUSE POWER AND GROUNDING PLAN

3/8" = 1'- 0"

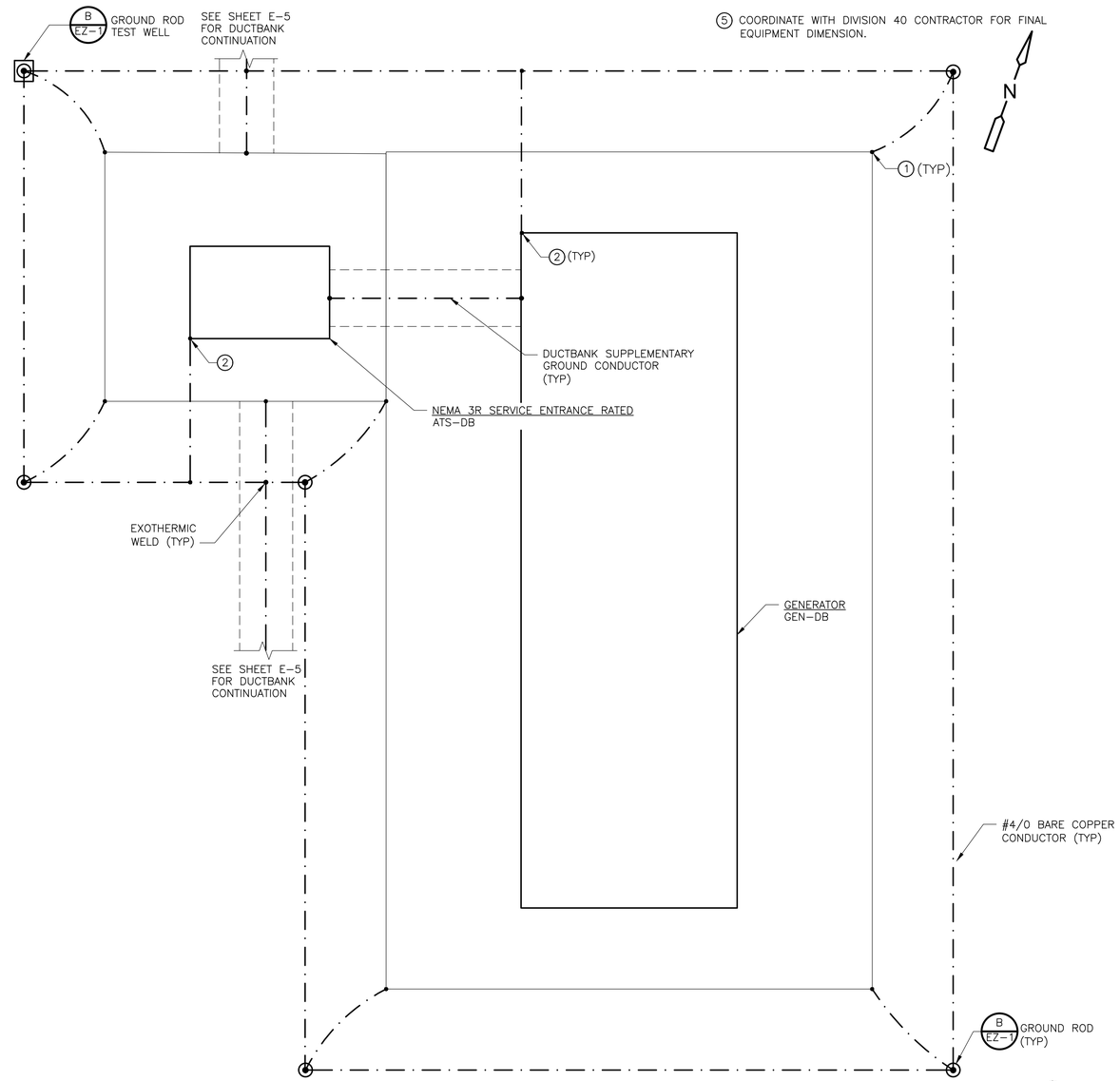

D B WOOD LIFT STATION GENERATOR GROUNDING PLAN

3/8" = 1'- 0"

STATE OF TEXAS
JOYSON VARGHESE
134792
LICENSED PROFESSIONAL ENGINEER
12/9/23

REV. NO.	DATE	DRWN	CHKD	REMARKS

DESIGNED BY: K. DINEESH
DRAWN BY: M. VISHNU
SHEET CHK'D BY: J. VARGHESE
CROSS CHK'D BY: S. MEHTA
APPROVED BY: J. VARGHESE
DATE: DECEMBER 2023

CDM Smith
8310-1 N Capital of Texas Hwy, Suite 250
Austin, TX 78731
Tel: (512) 346-1100
TBPELS Firm Registration No. F-3043

CITY OF GEORGETOWN, TEXAS

CEDAR BREAKS AND D B WOOD LIFT STATIONS

D B WOOD LIFT STATION
EHOUSE AND GENERATOR POWER
AND GROUNDING PLAN

PROJECT NO. 2048-272644
FILE NAME: E011LSPL.DWG
SHEET NO.
E-11

XREFs: [CDMS_2234_South Iake to South fork_Border; J. VARGHESE- review stamp; CDMS-003-SF INTERCEPTOR BRIDGE-FINAL-REV2; EWP002ST; _u] Images: []
Last saved by: VARGHESEJ2 Time: 12/11/2023 11:57:01 AM
pw:\\cdmsmith-pw02-pw.bentley.com:pw_pf1\2048\272644\04 Design Services NM_50%\09 Electrical\10 BIM_CADD\E011LSPL.dwg
©2023 CDM SMITH ALL RIGHTS RESERVED
REUSE OF DOCUMENTS: THESE DOCUMENTS AND DESIGNS PROVIDED BY PROFESSIONAL SERVICE, INCORPORATED HEREIN, ARE THE PROPERTY OF CDM SMITH AND ARE NOT TO BE USED, IN WHOLE OR PART, FOR ANY OTHER PROJECT WITHOUT THE WRITTEN AUTHORIZATION OF CDM SMITH.
Plotted: 12/13/2023 3:04:25 PM

KEY NOTES:

1. PROVIDE TRIP HAZARD PROTECTION FOR PUMP CABLES ROUTED TO WETWELL.

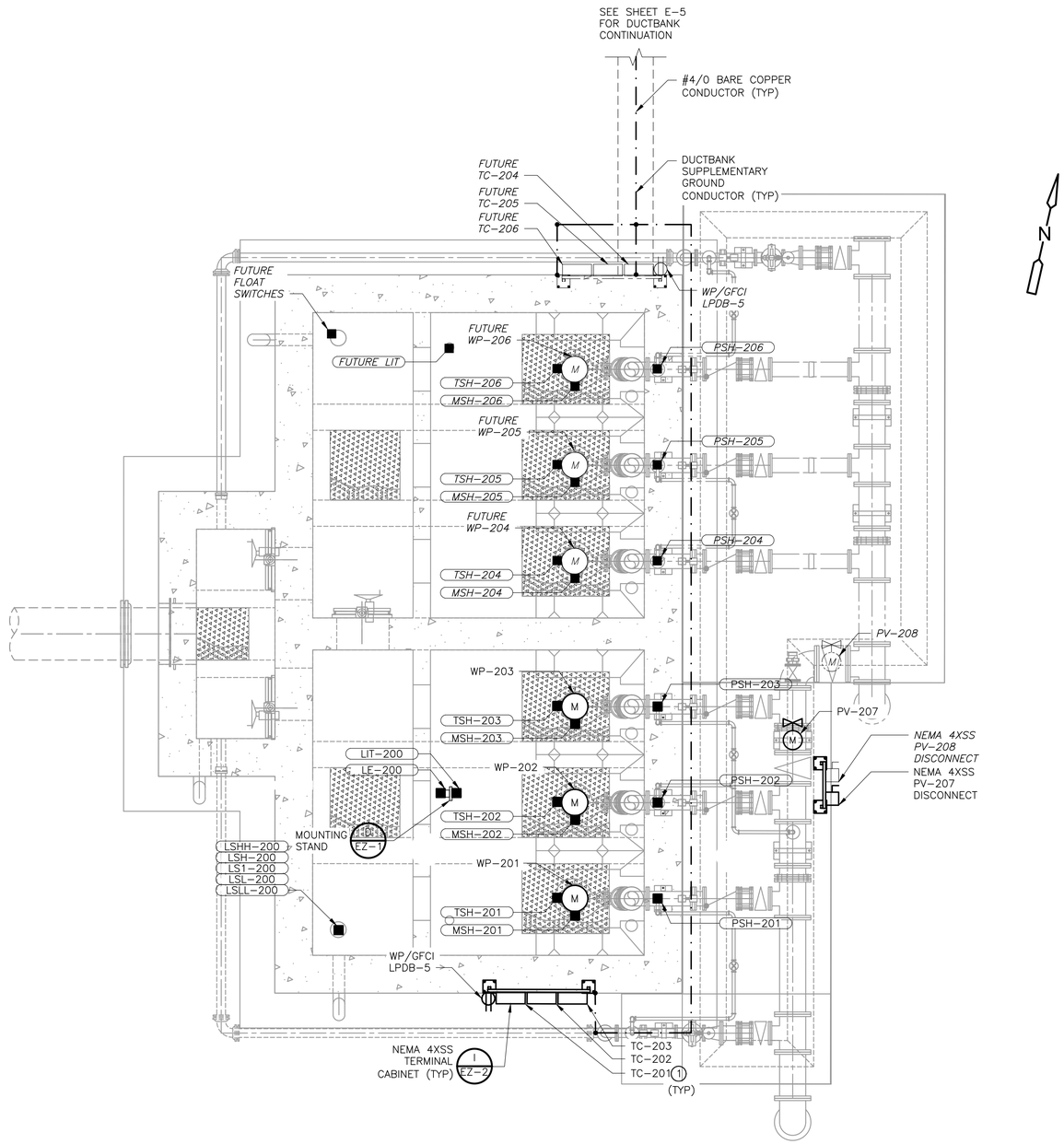

D B WOOD LIFT STATION ELECTRICAL

PLAN

1/4" = 1'- 0"

2 1 0 2 4

STATE OF TEXAS
JOYSON VARGHESE
134792
LICENSED PROFESSIONAL ENGINEER
12/9/23

REV. NO.	DATE	DRWN	CHKD	REMARKS

DESIGNED BY: K. DINEESH
DRAWN BY: M. VISHNU
SHEET CHK'D BY: J. VARGHESE
CROSS CHK'D BY: S. MEHTA
APPROVED BY: J. VARGHESE
DATE: DECEMBER 2023

CDM Smith
8310-1 N Capital of Texas Hwy, Suite 250
Austin, TX 78731
Tel: (512) 346-1100
TBPELS Firm Registration No. F-3043

CITY OF GEORGETOWN, TEXAS

CEDAR BREAKS AND D B WOOD LIFT STATIONS

D B WOOD LIFT STATION ELECTRICAL PLAN

PROJECT NO. 2048-272644
FILE NAME: E012LSPL.DWG

SHEET NO.
E-12

XREFs: [CDMS_2234_South lake to South fork_Border, J. VARGHESE- review stamp, MWP002LS, SWP002LS, SWP004LS, CDMS_2234_ LS_Border] Images: []
Last saved by: VARGHESEJ2 Time: 12/11/2023 11:56:46 AM
pw:\\cdmsmith-azo2-pw.bentley.com:pw_pt\2048\272644\04 Design Services NM_50%\09 Electrical\10 BIM_CADD\E012LSPL.dwg
© 2023 CDM SMITH ALL RIGHTS RESERVED.
REUSE OF DOCUMENTS: THESE DOCUMENTS AND DESIGNS PROVIDED BY PROFESSIONAL SERVICE, INCORPORATED HEREIN, ARE THE PROPERTY OF CDM SMITH AND ARE NOT TO BE USED, IN WHOLE OR PART, FOR ANY OTHER PROJECT WITHOUT THE WRITTEN AUTHORIZATION OF CDM SMITH.

Plotted: 12/13/2023 3:04:28 PM

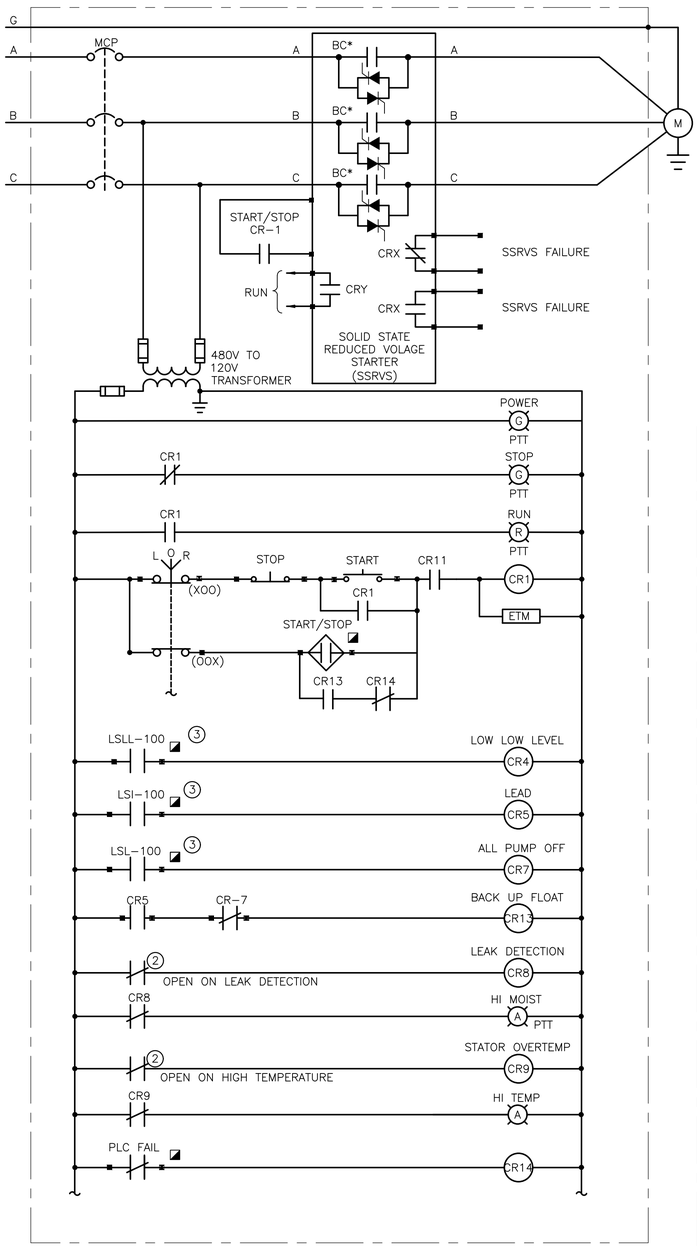

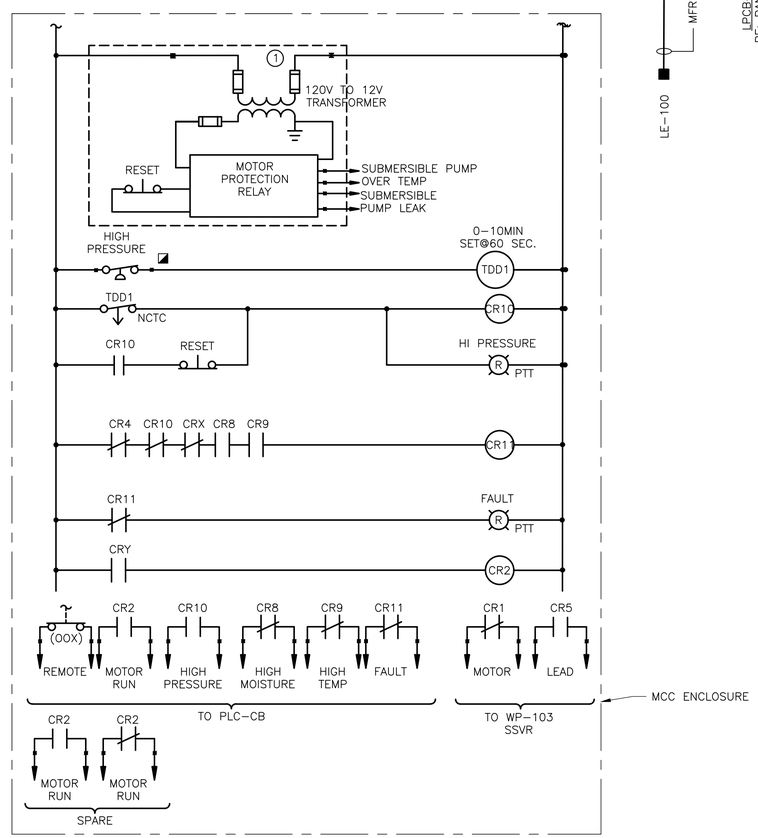

WP-101	MSH-101	TSH-101	PSH-101

SSRVS-101
SUBMERSIBLE SEWAGE PUMP WP-101

SCHEMATIC 1/–

KEY NOTES

1. MOTOR PROTECTION RELAY PROVIDED BY PUMP MANUFACTURER.
2. CONTACT FROM MOTOR PROTECTION RELAY. COORDINATE RELAY LOGIC WITH SUBMITTED PUMP RELAY. REVISE SCHEMATIC AS REQUIRED.
3. CONTACT FROM RELAY PANEL LRP-100.

SCHEMATIC LEGEND

- EXTERNAL DEVICE TERMINAL CONNECTIONS
- DEVICE LOCATED IN FIELD

ON (R) PUSH-TO-TEST LED PILOT LIGHT
PTT

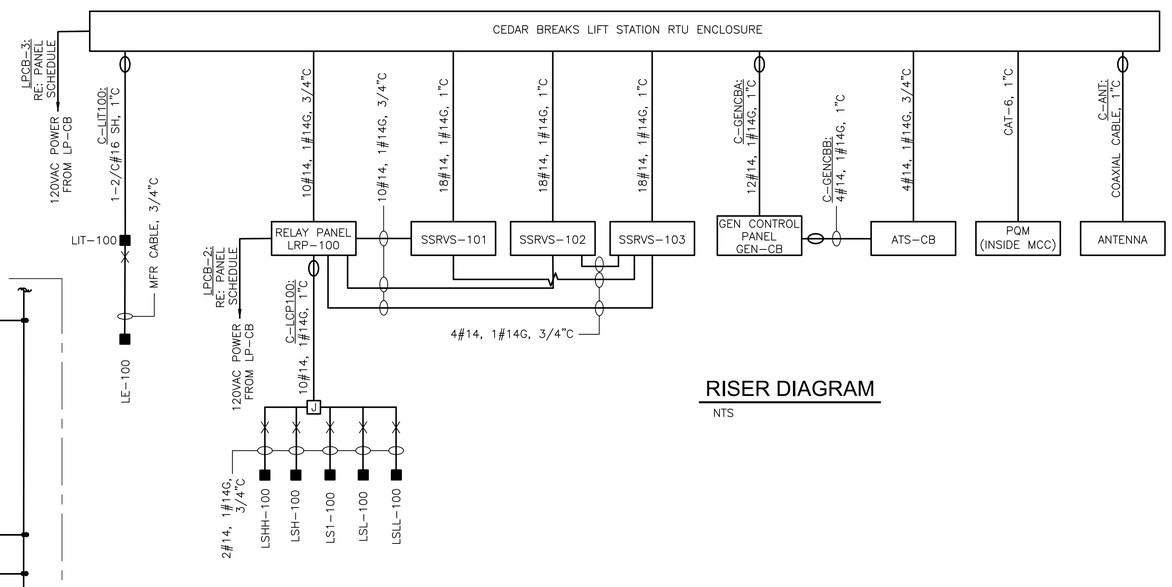

RISER DIAGRAM

NTS

REV. NO.	DATE	DRWN	CHKD	REMARKS

DESIGNED BY: K. DINEESH
DRAWN BY: K. DINEESH
SHEET CHK'D BY: J. VARGHESE
CROSS CHK'D BY: S. MEHTA
APPROVED BY: J. VARGHESE
DATE: DECEMBER 2023

CDM Smith
8310-1 N Capital of Texas Hwy, Suite 250
Austin, TX 78731
Tel: (512) 346-1100
TBPELS Firm Registration No. F-3043

CITY OF GEORGETOWN, TEXAS

CEDAR BREAKS AND D B WOOD LIFT STATIONS

CEDAR BREAKS LIFT STATION
SCHEMATIC I AND RISER DIAGRAM

PROJECT NO. 2048-272644
FILE NAME: E013LSRD.DWG
SHEET NO. E-13

XREF's: [CDMS_2234_South lake to South fork_Border_J. VARGHESE- review stamp, CDMS_2234_ LS_Border] Images: []
Last saved by: VARGHESEJ2 Time: 12/11/2023 11:55:46 AM
pw:\\cdmsmith-az02-pw.bentley.com:pw_pll\2048\272644\04 Design Services NM_50%\09 Electrical\10 BIM_CADD\E013LSRD.dwg
© 2023 CDM SMITH ALL RIGHTS RESERVED.
REUSE OF DOCUMENTS: THESE DOCUMENTS AND DESIGNS PROVIDED BY PROFESSIONAL SERVICE, INCORPORATED HEREIN, ARE THE PROPERTY OF CDM SMITH AND ARE NOT TO BE USED, IN WHOLE OR PART, FOR ANY OTHER PROJECT WITHOUT THE WRITTEN AUTHORIZATION OF CDM SMITH.
Plotted: 12/13/2023 3:04:31 PM

KEY NOTES

1. MOTOR PROTECTION RELAY PROVIDED BY PUMP MANUFACTURER.
2. CONTACT FROM MOTOR PROTECTION RELAY. COORDINATE RELAY LOGIC WITH SUBMITTED PUMP RELAY. REVISE SCHEMATIC AS REQUIRED.
3. CONTACT FROM RELAY PANEL LRP–100.

SCHEMATIC LEGEND

- ▪ EXTERNAL DEVICE TERMINAL CONNECTIONS
- ◪ DEVICE LOCATED IN FIELD
- ON (R) PUSH–TO–TEST LED PILOT LIGHT
  PTT

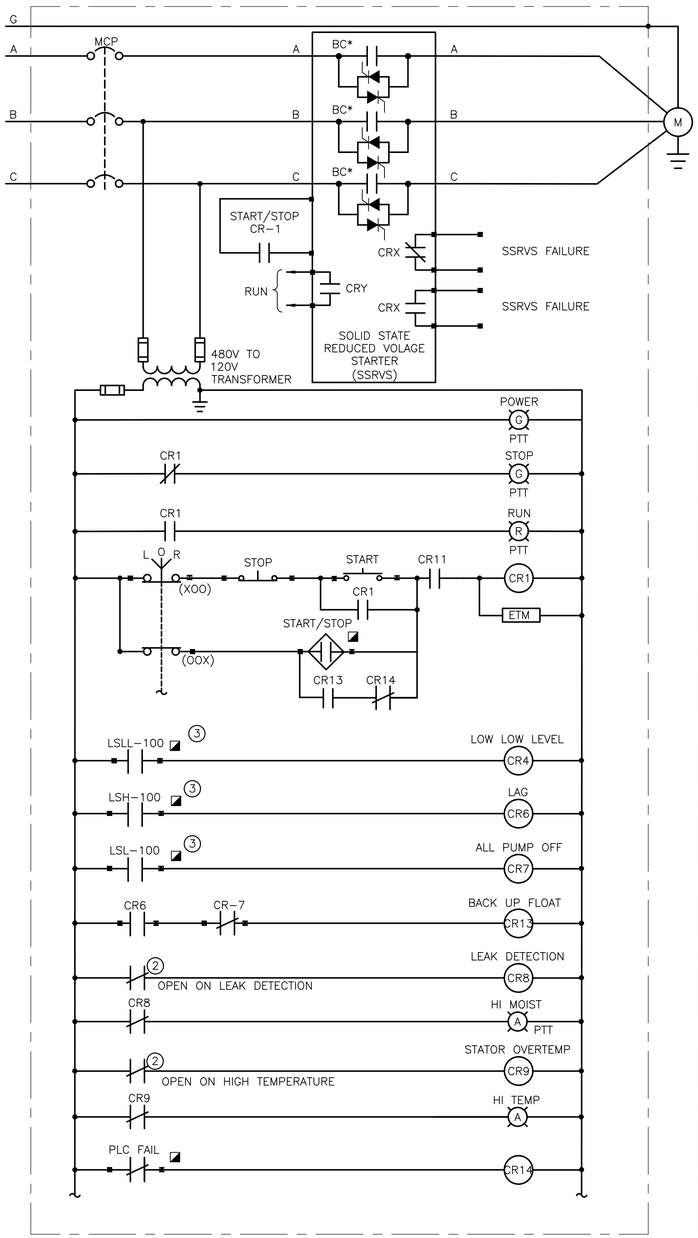

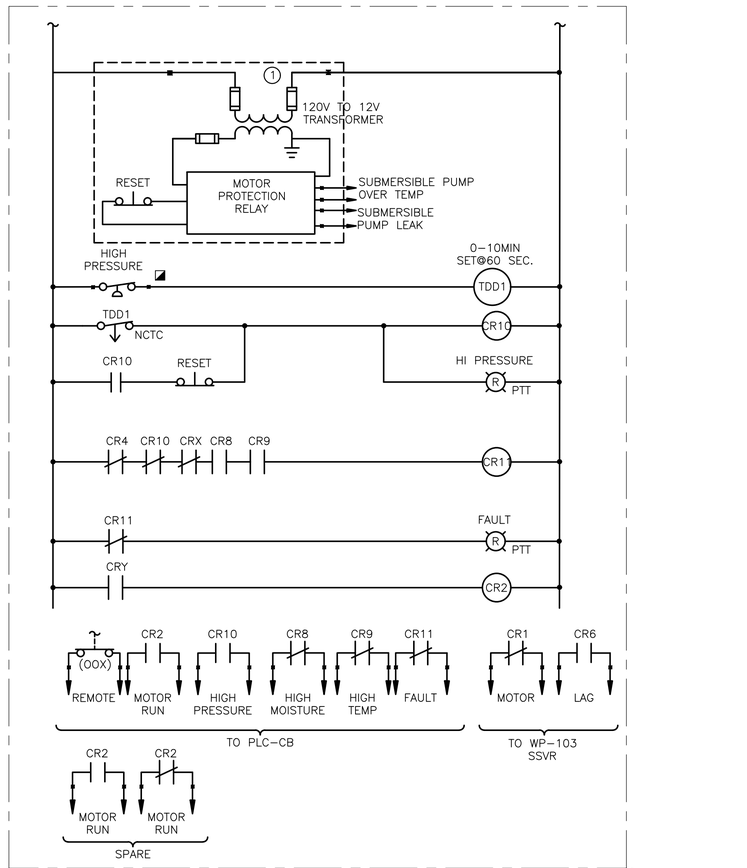

WP–102	MSH–102	TSH–102	PSH–102

SSRVS–102
SUBMERSIBLE SEWAGE PUMP WP–102

SCHEMATIC 1 / –

STATE OF TEXAS
JOYSON VARGHESE
134792
LICENSED
PROFESSIONAL ENGINEER
12/9/23

REV. NO.	DATE	DRWN	CHKD	REMARKS

DESIGNED BY: VISHNU M
DRAWN BY: VISHNU M
SHEET CHK'D BY: J. VARGHESE
CROSS CHK'D BY: S. MEHTA
APPROVED BY: J. VARGHESE
DATE: DECEMBER 2023

CDM Smith
8310-1 N Capital of Texas Hwy, Suite 250
Austin, TX 78731
Tel: (512) 346-1100
TBPELS Firm Registration No. F-3043

CITY OF GEORGETOWN, TEXAS

CEDAR BREAKS AND D B WOOD LIFT STATIONS

CEDAR BREAKS LIFT STATION
SCHEMATIC II

PROJECT NO. 2048–272644
FILE NAME: E014LSRD.DWG
SHEET NO.
E-14

XREFs: [CDMS_2234_South lake to South fork_Border, J. VARGHESE– review stamp, CDMS_2234_ LS_Border] Images: []
Last saved by: VARGHESEJ2 Time: 12/11/2023 11:55:30 AM
pw:\\cdmsmith–a202–pw.bentley.com:pw_pi1\2048\272644\04 Design Services NM_50%\09 Electrical\10 BIM_CADD\E014LSRD.dwg
© 2023 CDM SMITH ALL RIGHTS RESERVED.
REUSE OF DOCUMENTS: THESE DOCUMENTS AND DESIGNS PROVIDED BY PROFESSIONAL SERVICE, INCORPORATED HEREIN, ARE THE PROPERTY OF CDM SMITH. ARE NOT TO BE USED, IN WHOLE OR PART, FOR ANY OTHER PROJECT WITHOUT THE WRITTEN AUTHORIZATION OF CDM SMITH.

Plotted: 12/13/2023 3:04:33 PM

KEY NOTES

1. MOTOR PROTECTION RELAY PROVIDED BY PUMP MANUFACTURER.
2. CONTACT FROM MOTOR PROTECTION RELAY. COORDINATE RELAY LOGIC WITH SUBMITTED PUMP RELAY. REVISE SCHEMATIC AS REQUIRED.
3. CONTACT FROM RELAY PANEL LRP–100.

SCHEMATIC LEGEND

- ▪ EXTERNAL DEVICE TERMINAL CONNECTIONS
- ◪ DEVICE LOCATED IN FIELD
- ON (R) PUSH–TO–TEST LED PILOT LIGHT PTT

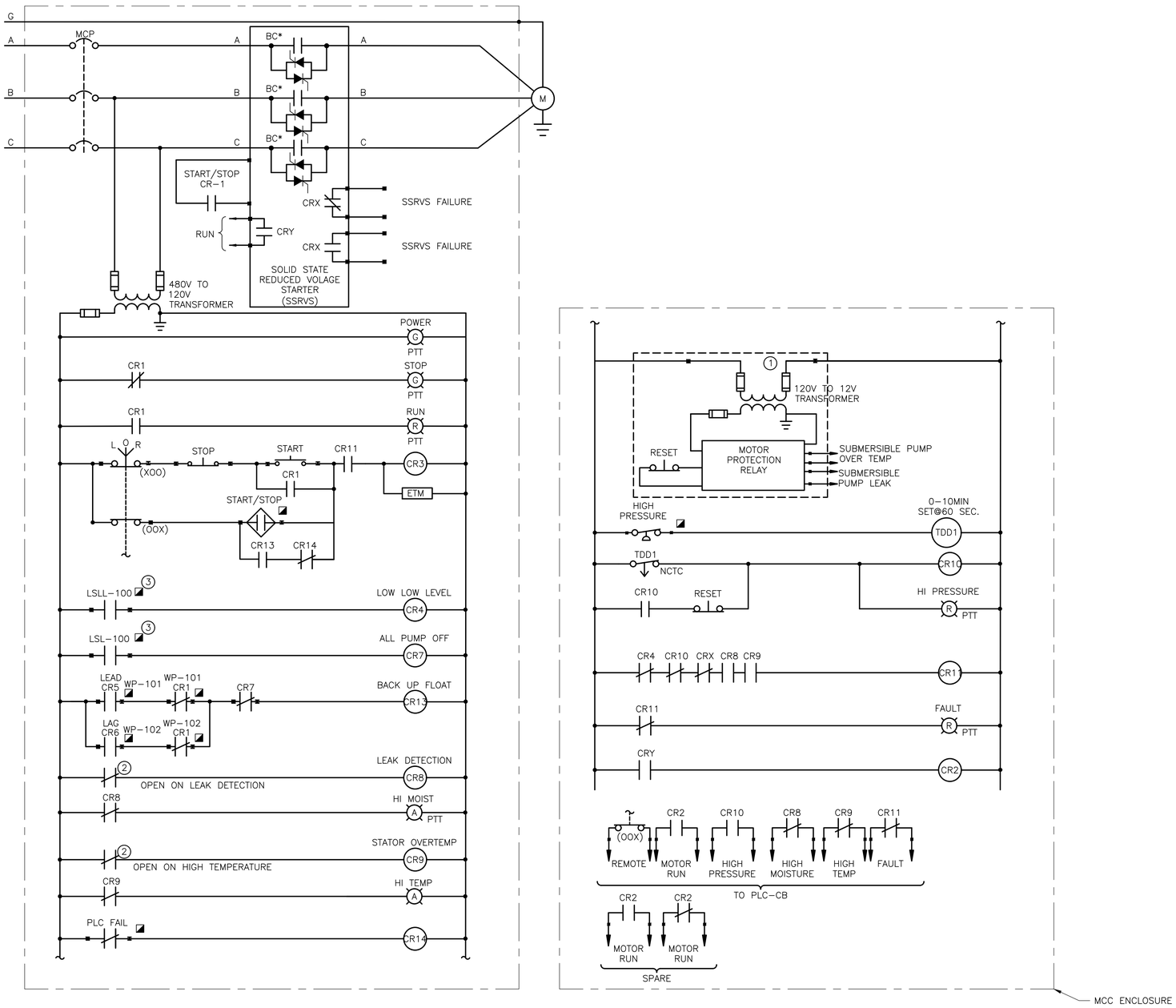

SSRVS–103
SUBMERSIBLE SEWAGE PUMP WP–103

SCHEMATIC 1 / –

WP–103	MSH–103	TSH–103	PSH–103

STATE OF TEXAS
JOYSON VARGHESE
134792
LICENSED
PROFESSIONAL ENGINEER
12/9/23

REV. NO.	DATE	DRWN	CHKD	REMARKS

DESIGNED BY: VISHNU M
DRAWN BY: VISHNU M
SHEET CHK'D BY: J. VARGHESE
CROSS CHK'D BY: S. MEHTA
APPROVED BY: J. VARGHESE
DATE: DECEMBER 2023

CDM Smith
8310-1 N Capital of Texas Hwy, Suite 250
Austin, TX 78731
Tel: (512) 346-1100
TBPELS Firm Registration No. F-3043

CITY OF GEORGETOWN, TEXAS

CEDAR BREAKS AND D B WOOD LIFT STATIONS

CEDAR BREAKS LIFT STATION
SCHEMATIC III

PROJECT NO. 2048–272644
FILE NAME: E015LSRD.DWG
SHEET NO.
E-15

XREFs: [CDMS_2234_South lake to South fork_Border, J. VARGHESE– review stamp, CDMS_2234_ LS_Border] Images: []
Last saved by: VARGHESEJ2 Time: 12/11/2023 11:55:19 AM
pw:\\cdmsmith–a02–pw.bentley.com:pw_pt\2048\272644\04 Design Services NM_50ft\09 Electrical\10 BIM_CADD\E015LSRD.dwg
© 2023 CDM SMITH ALL RIGHTS RESERVED.
REUSE OF DOCUMENTS: THESE DOCUMENTS AND DESIGNS PROVIDED BY PROFESSIONAL SERVICE, INCORPORATED HEREIN, ARE THE PROPERTY OF CDM SMITH AND ARE NOT TO BE USED, IN WHOLE OR PART, FOR ANY OTHER PROJECT WITHOUT THE WRITTEN AUTHORIZATION OF CDM SMITH.

Plotted: 12/13/2023 3:04:35 PM

KEY NOTES

1. MOTOR PROTECTION RELAY PROVIDED BY PUMP MANUFACTURER.
2. CONTACT FROM MOTOR PROTECTION RELAY. COORDINATE RELAY LOGIC WITH SUBMITTED PUMP RELAY. REVISE SCHEMATIC AS REQUIRED.
3. CONTACT FROM RELAY PANEL LRP-200.
4. STUB UP AND CAP CONDUITS AT BOTH ENDS FOR FUTURE USE.

SCHEMATIC LEGEND

- ▪ EXTERNAL DEVICE TERMINAL CONNECTIONS
- ◪ DEVICE LOCATED IN FIELD
- ON (R) PUSH-TO-TEST LED PILOT LIGHT
- PTT

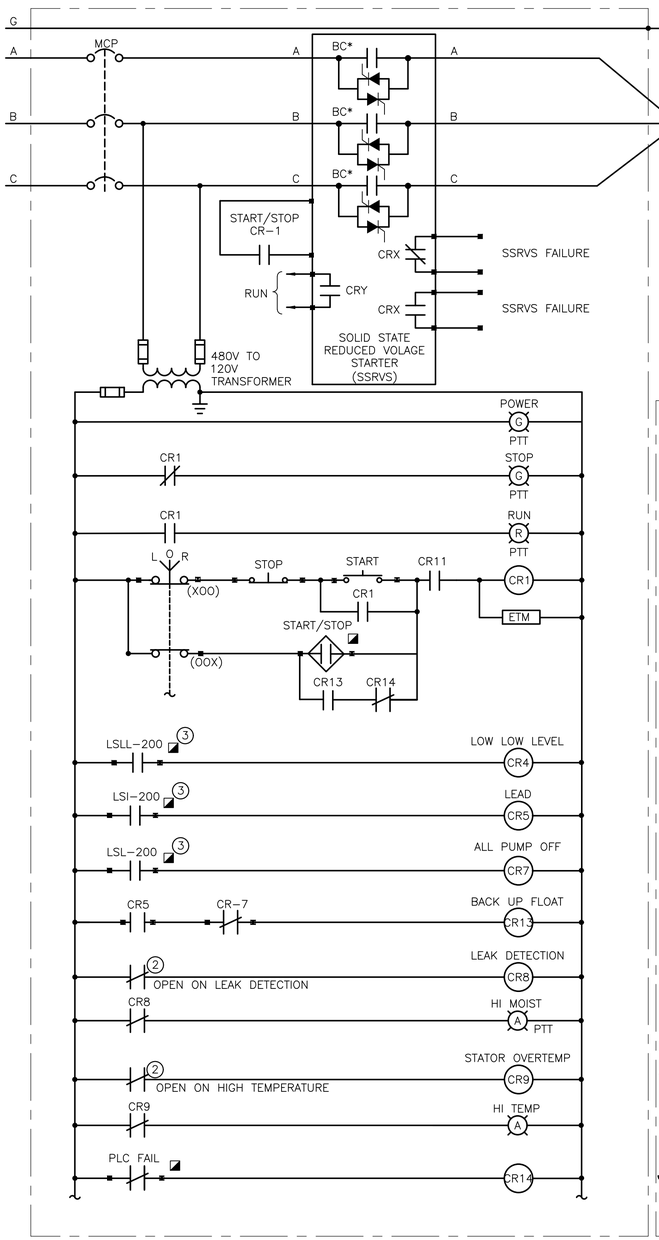

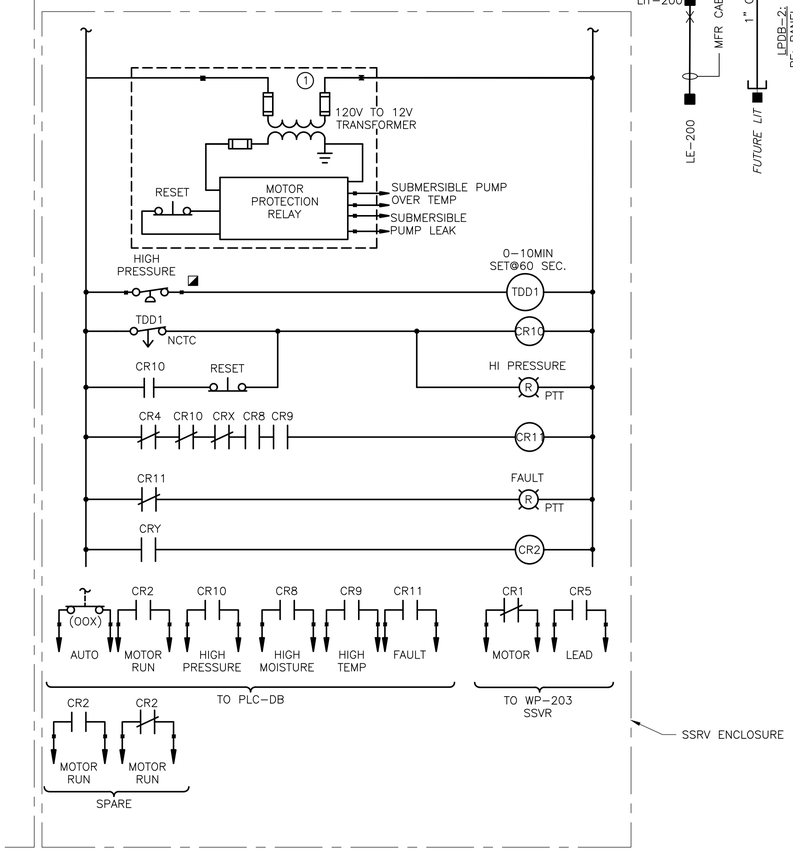

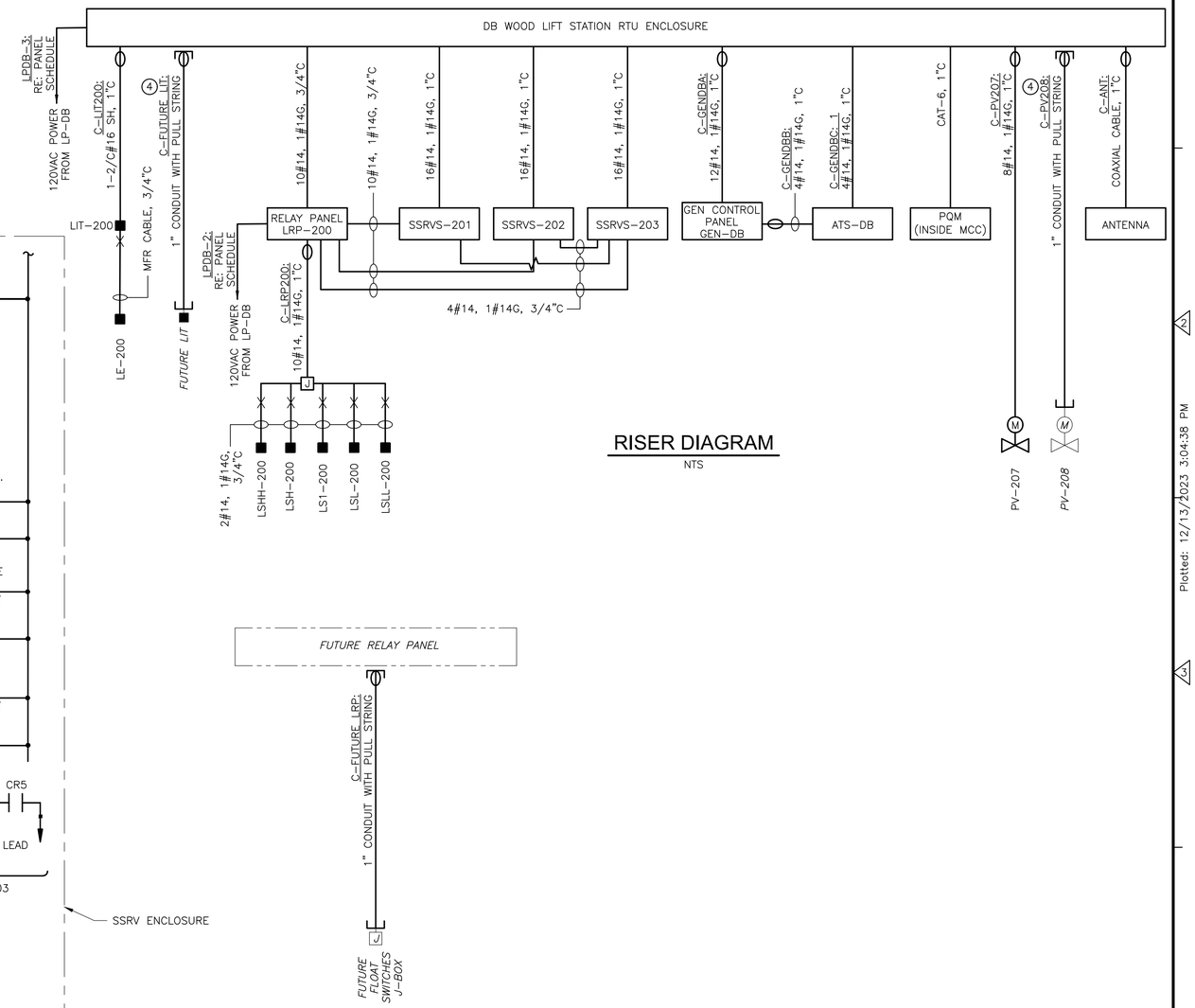

RISER DIAGRAM

NTS

SSRVS-201
SUBMERSIBLE SEWAGE PUMP WP-201

SCHEMATIC 1 / -

WP-201	MSH-201	TSH-201	PSH-201

STATE OF TEXAS — JOYSON VARGHESE — 134792 — LICENSED PROFESSIONAL ENGINEER — 12/9/23

REV. NO.	DATE	DRWN	CHKD	REMARKS

DESIGNED BY: K. DINEESH
DRAWN BY: K. DINEESH
SHEET CHK'D BY: J. VARGHESE
CROSS CHK'D BY: S. MEHTA
APPROVED BY: J. VARGHESE
DATE: DECEMBER 2023

CDM Smith
8310-1 N Capital of Texas Hwy, Suite 250
Austin, TX 78731
Tel: (512) 346-1100
TBPELS Firm Registration No. F-3043

CITY OF GEORGETOWN, TEXAS

CEDAR BREAKS AND D B WOOD LIFT STATIONS

DB WOOD LIFT STATION
SCHEMATIC I AND RISER DIAGRAM

PROJECT NO. 2048-272644
FILE NAME: E016LSRD.DWG
SHEET NO.
E-16

XREFs: [CDMS_2234_South Iole to South fork_Border, J. VARGHESE- review stamp, CDMS_2234_ LS_Border] Images: []
Last saved by: VARGHESEJ2 Time: 12/11/2023 11:55:05 AM
pw:\\cdmsmith-a202-pw.bentley.com:pw_pl1\2048\272644\04 Design Services NM_50%\09 Electrical\10 BIM_CADD\E016LSRD.dwg
©2023 CDM SMITH ALL RIGHTS RESERVED.
REUSE OF DOCUMENTS: THESE DOCUMENTS AND DESIGNS PROVIDED BY PROFESSIONAL SERVICE, INCORPORATED HEREIN, ARE THE PROPERTY OF CDM SMITH. OF CDM SMITH AND ARE NOT TO BE USED, IN WHOLE OR PART, FOR ANY OTHER PROJECT WITHOUT THE WRITTEN AUTHORIZATION OF CDM SMITH.

Plotted: 12/13/2023 3:04:38 PM

KEY NOTES

1. MOTOR PROTECTION RELAY PROVIDED BY PUMP MANUFACTURER.
2. CONTACT FROM MOTOR PROTECTION RELAY. COORDINATE RELAY LOGIC WITH SUBMITTED PUMP RELAY. REVISE SCHEMATIC AS REQUIRED.
3. CONTACT FROM RELAY PANEL LRP–200.

SCHEMATIC LEGEND

- ▪ EXTERNAL DEVICE TERMINAL CONNECTIONS
- ◪ DEVICE LOCATED IN FIELD
- ON (R) PUSH–TO–TEST LED PILOT LIGHT
- PTT

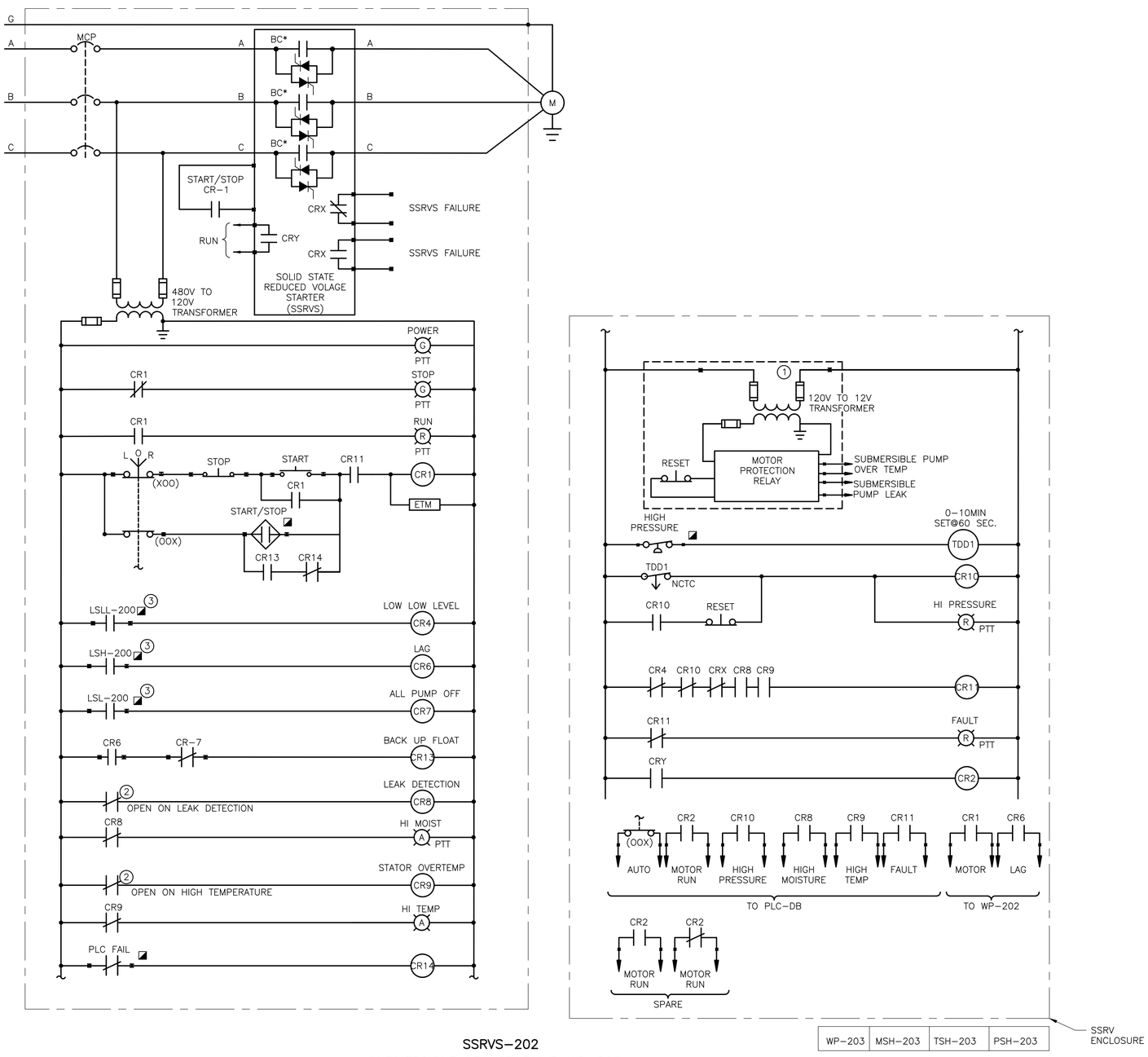

SSRVS–202
SUBMERSIBLE SEWAGE PUMP WP–202

SCHEMATIC 1/–

STATE OF TEXAS
JOYSON VARGHESE
134792
LICENSED
PROFESSIONAL ENGINEER
12/9/23

REV. NO.	DATE	DRWN	CHKD	REMARKS

DESIGNED BY: VISHNU M
DRAWN BY: VISHNU M
SHEET CHK'D BY: J. VARGHESE
CROSS CHK'D BY: S. MEHTA
APPROVED BY: J. VARGHESE
DATE: DECEMBER 2023

CDM Smith
8310-1 N Capital of Texas Hwy, Suite 250
Austin, TX 78731
Tel: (512) 346-1100
TBPELS Firm Registration No. F-3043

CITY OF GEORGETOWN, TEXAS

CEDAR BREAKS AND D B WOOD LIFT STATIONS

DB WOOD LIFT STATION
SCHEMATIC II

PROJECT NO. 2048–272644
FILE NAME: E017LSRD.DWG
SHEET NO.
E-17

XREFs: [CDMS_2234_South lake to South fork_Border, J. VARGHESE– review stamp, CDMS_2234_ LS_Border] Images: []
Last saved by: VARGHESSJ2 Time: 12/11/2023 11:54:43 AM
pw:\\cdmsmith–a202–pw.bentley.com:pw_pi1\2048\272644\04 Design Services NM_50%\09 Electrical\10 BIM_CADD\E017LSRD.dwg
© 2023 CDM SMITH ALL RIGHTS RESERVED.
REUSE OF DOCUMENTS: THESE DOCUMENTS AND DESIGNS PROVIDED BY PROFESSIONAL SERVICE, INCORPORATED HEREIN, ARE THE PROPERTY OF CDM SMITH AND ARE NOT TO BE USED, IN WHOLE OR PART, FOR ANY OTHER PROJECT WITHOUT THE WRITTEN AUTHORIZATION OF CDM SMITH.

Plotted: 12/13/2023 3:04:40 PM

KEY NOTES

1. MOTOR PROTECTION RELAY PROVIDED BY PUMP MANUFACTURER.
2. CONTACT FROM MOTOR PROTECTION RELAY. COORDINATE RELAY LOGIC WITH SUBMITTED PUMP RELAY. REVISE SCHEMATIC AS REQUIRED.
3. CONTACT FROM RELAY PANEL LRP-200.

SCHEMATIC LEGEND

- ▪ EXTERNAL DEVICE TERMINAL CONNECTIONS
- ◪ DEVICE LOCATED IN FIELD
- ON (R) PUSH-TO-TEST LED PILOT LIGHT
- PTT

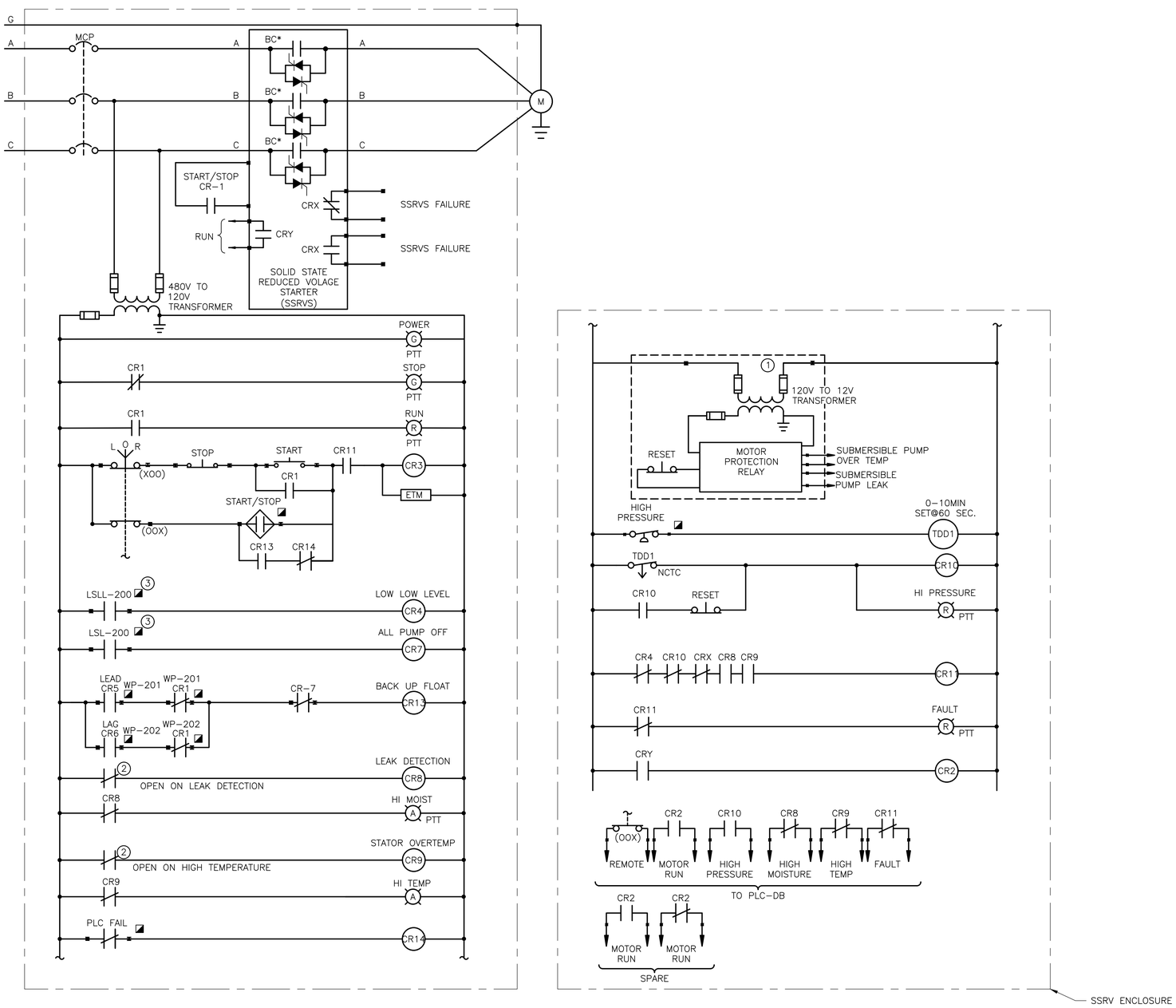

SSRVS-203
SUBMERSIBLE SEWAGE PUMP WP-203

SCHEMATIC 1/-

WP-203	MSH-203	TSH-203	PSH-203

REV. NO.	DATE	DRWN	CHKD	REMARKS

DESIGNED BY: VISHNU M
DRAWN BY: VISHNU M
SHEET CHK'D BY: J. VARGHESE
CROSS CHK'D BY: S. MEHTA
APPROVED BY: J. VARGHESE
DATE: DECEMBER 2023

CDM Smith
8310-1 N Capital of Texas Hwy, Suite 250
Austin, TX 78731
Tel: (512) 346-1100
TBPELS Firm Registration No. F-3043

CITY OF GEORGETOWN, TEXAS

CEDAR BREAKS AND D B WOOD LIFT STATIONS

DB WOOD LIFT STATION
SCHEMATIC III

PROJECT NO. 2048-272644
FILE NAME: E018LSRD.DWG
SHEET NO.
E-18

STATE OF TEXAS
JOYSON VARGHESE
134792
LICENSED PROFESSIONAL ENGINEER
12/9/23

XREFs: [CDMS_2234_South lake to South fork_Border, J. VARGHESE- review stamp, CDMS_2234_ LS_Border] Images: []
Last saved by: VARGHESEJ2 Time: 12/11/2023 11:54:28 AM
pw:\\cdmsmith-azo2-pw.bentley.com:pw_pt\2048\272644\04 Design Services NM_50%\09 Electrical\10 BIM_CADD\E018LSRD.dwg

© 2023 CDM SMITH ALL RIGHTS RESERVED.
REUSE OF DOCUMENTS: THESE DOCUMENTS AND DESIGNS PROVIDED BY PROFESSIONAL SERVICE, INCORPORATED HEREIN, ARE THE PROPERTY OF CDM SMITH. ARE NOT TO BE USED, IN WHOLE OR PART, FOR ANY OTHER PROJECT WITHOUT THE WRITTEN AUTHORIZATION OF CDM SMITH.

Plotted: 12/13/2023 3:04:42 PM

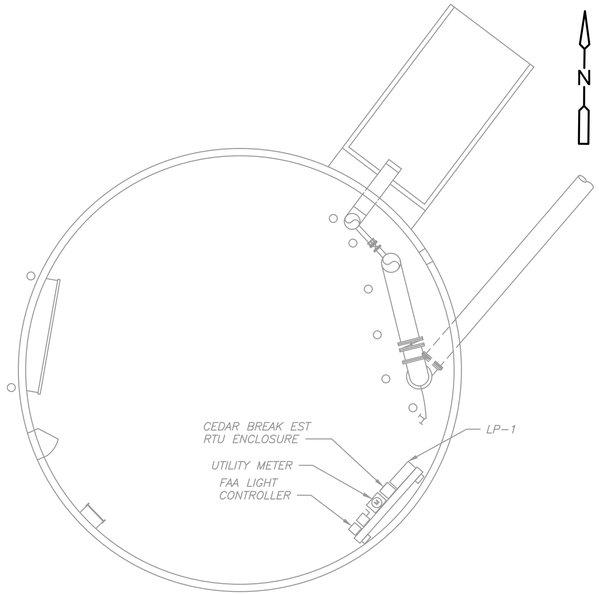

EXISTING ELEVATED STORAGE TANK

PLAN

1/8" = 1'- 0"

4 2 0 4 8

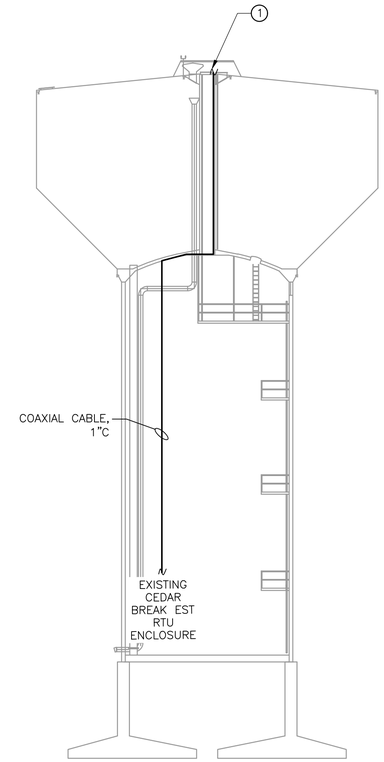

EXISTING ELEVATED STORAGE TANK ②

ELEVATION A

NTS

GENERAL NOTES:

1. THIS DRAWING REPRESENTS THE LATEST DOCUMENTED INFORMATION AVAILABLE ON THE EXISTING SYSTEM. HOWEVER, UNDOCUMENTED CHANGES MAY EXIST. PROVIDE THE NECESSARY CHANGES TO PROVIDE A COMPLETE AND OPERABLE SYSTEM ACCORDING TO THE INTENT OF THIS AND ALL DRAWINGS.

KEY NOTES:

① EXTEND CONDUIT AND CABLE TO THE OMNI ANTENNA. A GENERAL CONDUIT ROUTING IS SHOWN ON THE DRAWING, CONTRACTOR SHALL PROVDIE ALL LABOR, MATERIAL, AND INCIDENTAL TO FIELD VERIFY AND ROUTE CONDUIT AND CABLE FROM THE EXISTING RTU PANEL TO NEW OMNI ANTENNA.

② REFER TO INSTRUMENTATION DETAIL 'C' ON SHEET IZ-1 FOR OMNI ANTENNA MOUNTING DETAIL.

STATE OF TEXAS
JOYSON VARGHESE
134792
LICENSED
PROFESSIONAL ENGINEER
12/9/23

REV. NO.	DATE	DRWN	CHKD	REMARKS

DESIGNED BY: K. DINEESH
DRAWN BY: K. DINEESH
SHEET CHK'D BY: J. VARGHESE
CROSS CHK'D BY: S. MEHTA
APPROVED BY: J. VARGHESE
DATE: DECEMBER 2023

CDM Smith
8310-1 N Capital of Texas Hwy, Suite 250
Austin, TX 78731
Tel: (512) 346-1100
TBPELS Firm Registration No. F-3043

CITY OF GEORGETOWN, TEXAS

CEDAR BREAKS AND D B WOOD LIFT STATIONS

CEDAR BREAK EST
EXISTING ELEVATED STORAGE TANK
PLAN AND ELEVATION

PROJECT NO. 2048-272644
FILE NAME: E019NFPL.DWG

SHEET NO.
E-19

Plotted: 12/13/2023 3:04:44 PM

XREFs: [CDMS_2234_South Iole to South fork_Border, J. VARGHESE- review stamp, X-CTOWER, CDMS_2234_ LS_Border] images: []
Last saved by: VARGHESEJ2 Time: 12/11/2023 11:54:04 AM
pw:\\cdmsmith-azc2-pw.bentley.com:pw_pi1\2048\272644\04 Design Services NM_50%\09 Electrical\10 BIM_CADD\E019NFPL.dwg
©2023 CDM SMITH ALL RIGHTS RESERVED.
REUSE OF DOCUMENTS: THESE DOCUMENTS AND DESIGNS PROVIDED BY PROFESSIONAL SERVICE, INCORPORATED HEREIN, ARE THE PROPERTY OF CDM SMITH AND ARE NOT TO BE USED, IN WHOLE OR PART, FOR ANY OTHER PROJECT WITHOUT THE WRITTEN AUTHORIZATION OF CDM SMITH.

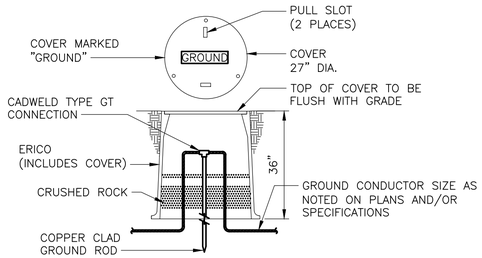

NOTE:

1. TO IMPROVE SYSTEM RESISTANCE, ERICO GEM MAY BE USED AS A BACKFILL MATERIAL IN AN AUGERED HOLE

GROUND ROD TEST WELL

DETAIL A
NTS

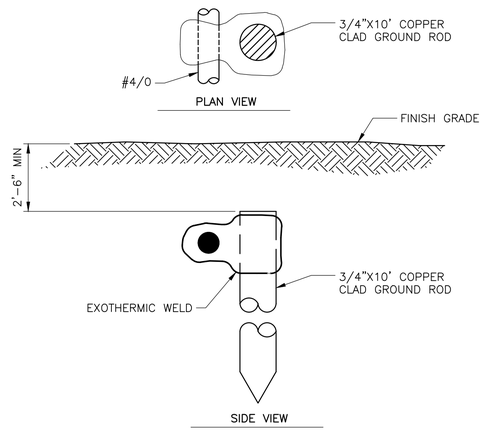

GROUND GRID CONNECTION TO GROUND ROD

DETAIL B
NTS

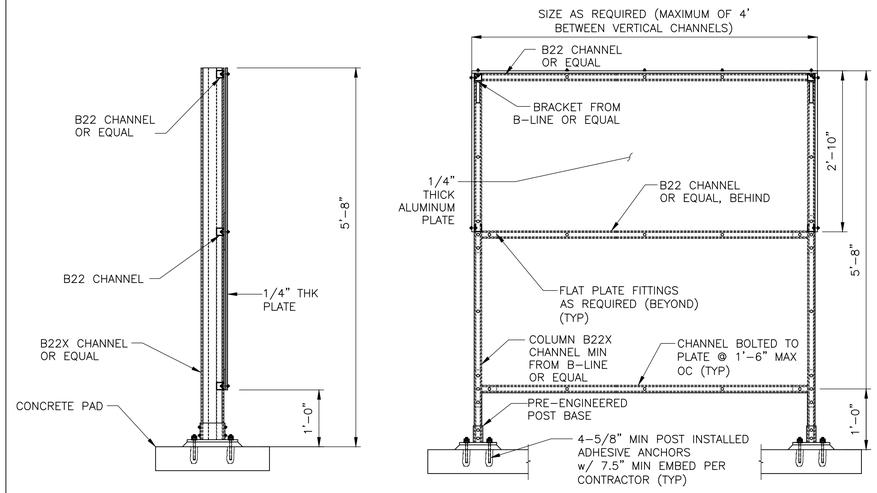

NOTES:

1. REFER TO SPECIFICATIONS FOR MATERIAL TYPES.
2. SUBMIT STRUCTURAL CALCULATIONS FOR EQUIPMENT SUPPORT STRUCTURE DESIGNED BY CONTRACTOR.
3. SUNSHIELD REQUIRED FOR OUTDOOR INSTALLATIONS ONLY.

EQUIPMENT SUPPORT STRUCTURE

DETAIL C
NTS

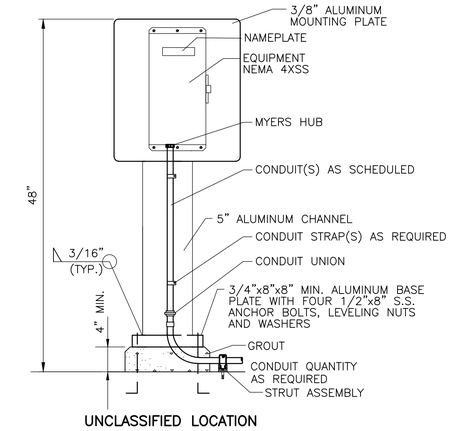

NOTES:

1. PROVIDE DISCONNECT WITH AUXILIARY CONTACT.
2. PUSHBUTTONS AS REQUIRED.
3. CONTRACTOR TO DESIGN MOUNTING STAND. MINIMUM DIMENSIONS ARE SHOWN.
4. SUBMITTALS SHALL BE IN ACCORDANCE WITH SPECIFICATIONS.

MOUNTING STAND

DETAIL D
NTS

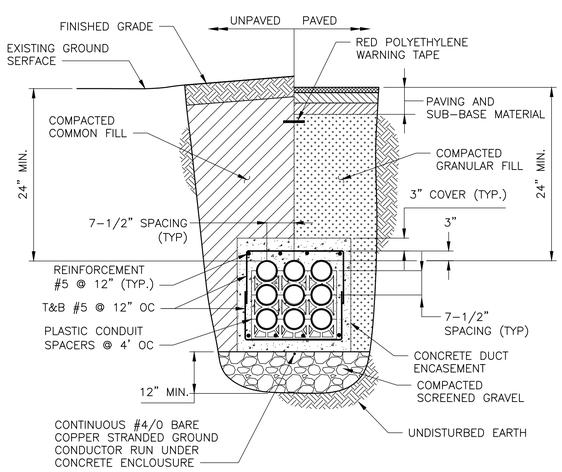

UNDERGROUND POWER DUCT BANK

DETAIL E
NTS

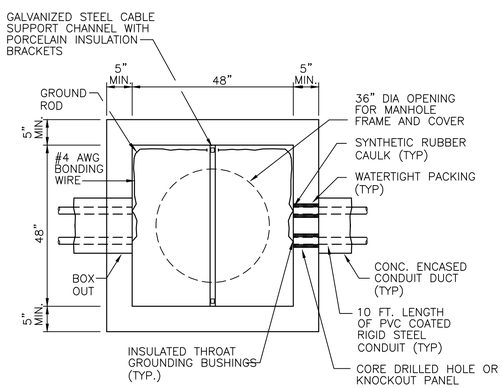

PLAN

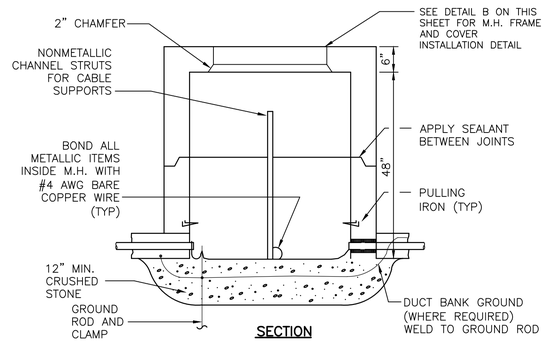

SECTION

NOTES:

1. BOND ALL METALLIC ITEMS INSIDE EHH TO GROUND W/MIN. #4 AWG BARE COPPER CABLE UNO.
2. HANDHOLES SHALL BE REINFORCED FOR H20 WHEEL LOAD.
3. CABLES SHALL BE RACKED ON PORCELAIN INSULATION CLAMPS.

ELECTRICAL HANDHOLE (EHH)

DETAIL F
NTS

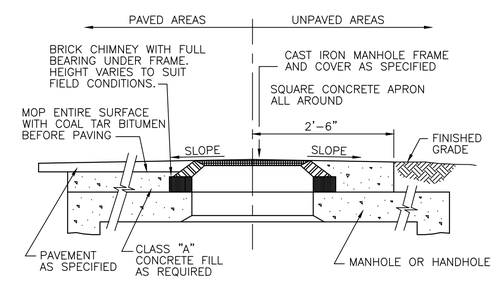

NOTE:

1. FINAL GRADING SHALL PROVIDE ADEQUATE DRAINAGE AWAY FROM MANHOLE COVER IN ALL DIRECTIONS.

MANHOLE OR HANDHOLE FRAME AND COVER

DETAIL G
NTS

STATE OF TEXAS
JOYSON VARGHESE
134792
LICENSED
PROFESSIONAL ENGINEER
12/9/23

REV. NO.	DATE	DRWN	CHKD	REMARKS

DESIGNED BY: K. DINEESH
DRAWN BY: K. DINEESH
SHEET CHK'D BY: J. VARGHESE
CROSS CHK'D BY: S. MEHTA
APPROVED BY: J. VARGHESE
DATE: DECEMBER 2023

CDM Smith
8310-1 N Capital of Texas Hwy, Suite 250
Austin, TX 78731
Tel: (512) 346-1100
TBPELS Firm Registration No. F-3043

CITY OF GEORGETOWN, TEXAS

CEDAR BREAKS AND D B WOOD LIFT STATIONS

ELECTRICAL DETAILS I

PROJECT NO. 2048-272644
FILE NAME: EZ01LSDT.DWG
SHEET NO.
EZ-1

XREFs: [CDMS_2234_South lake to South fork_Border, J. VARGHESE- review stamp, CDMS_2234_ LS_Border] Images: []
Last saved by: VARGHESEJ2 Time: 12/11/2023 11:53:55 AM
pw:\\cdmsmith-a202-pw.bentley.com:pw_pi\2048\272644\04 Design Services NM_50%\09 Electrical\10 BIM_CADD\EZ01LSDT.dwg
© 2023 CDM SMITH ALL RIGHTS RESERVED.
REUSE OF DOCUMENTS: THESE DOCUMENTS AND DESIGNS PROVIDED BY PROFESSIONAL SERVICE, INCORPORATED HEREIN, ARE THE PROPERTY OF CDM SMITH AND ARE NOT TO BE USED, IN WHOLE OR PART, FOR ANY OTHER PROJECT WITHOUT THE WRITTEN AUTHORIZATION OF CDM SMITH.
Plotted: 12/13/2023 3:04:47 PM

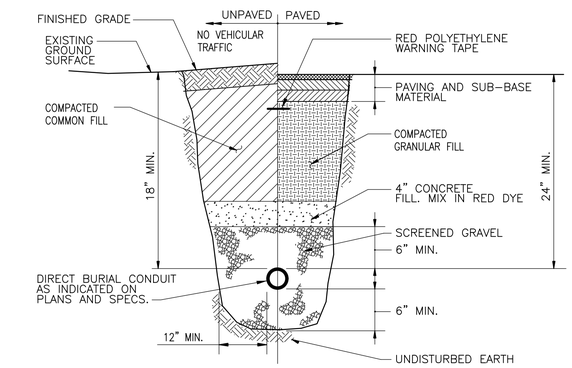

TYPICAL DIRECT BURIAL CONDUIT INSTALLATION

DETAIL H
NTS –

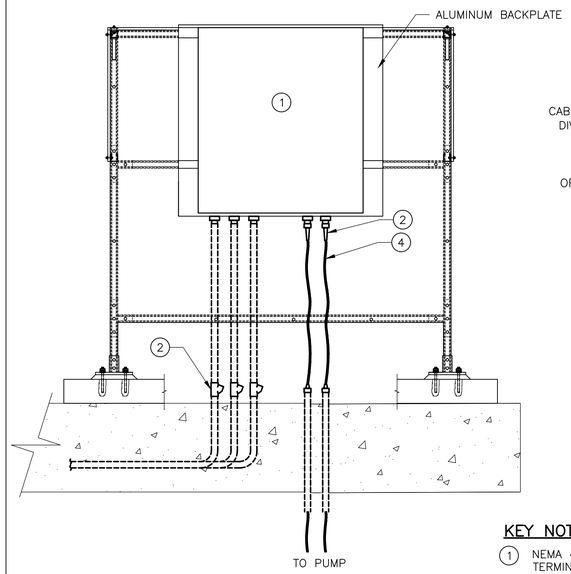

SUBMERSIBLE CABLE APPLICATION

SECTION I
NTS –

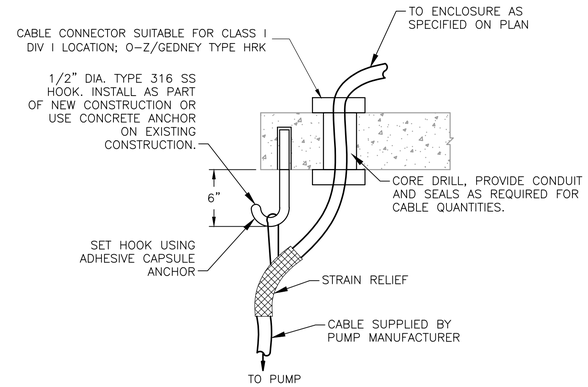

KEY NOTES:

1. NEMA 4X STAINLESS STEEL TERMINAL BOX. SIZE TERMINAL BOX PER NEC AS REQUIRED. PROVIDE TERMINAL BLOCKS WITH SCREW DOWN BOX LUGS FOR CONNECTION TO PUMP CABLE.
2. INSTALL CORD SEALING STRAIN-RELIEF CABLE CONNECTOR.
3. NO FITTING SHALL BE INSTALLED FROM CONDUIT SEAL TO TERMINAL BOX. NO FITTINGS SHALL BE INSTALLED FROM THE CONDUIT SEAL TO THE SLAB.
4. CABLE SUPPLIED BY PUMP MANUFACTURER.

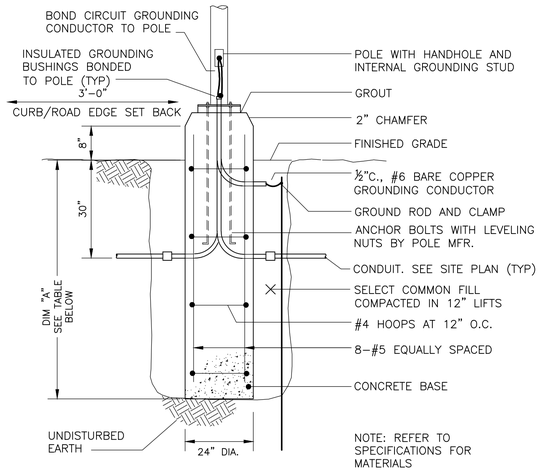

POLE HEIGHT	DIMENSION "A"
20'-0"	4'-6"

STANDARD LIGHTING BASE

DETAIL J
NTS –

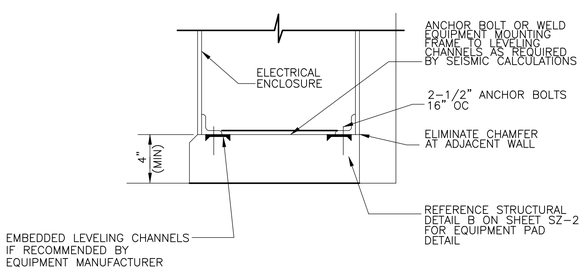

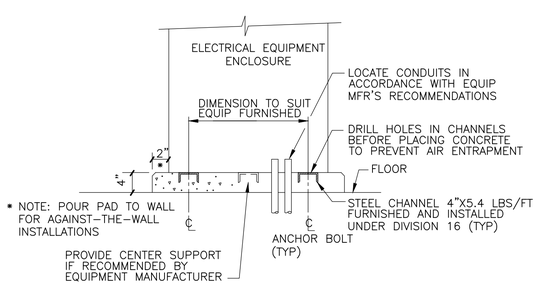

ELECTRICAL EQUIPMENT PAD

DETAIL K
NTS –

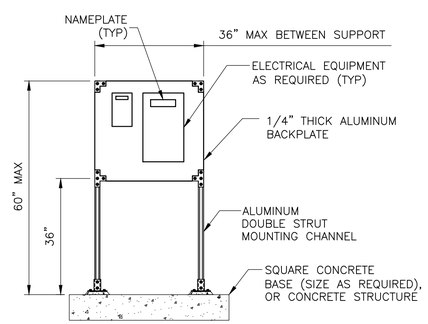

NOTES:

1. WELDING STRUT ASSEMBLY IS NOT ACCEPTABLE.

TYPICAL PAD MOUNTED STRUT SUPPORT STAND

DETAIL L
NTS –

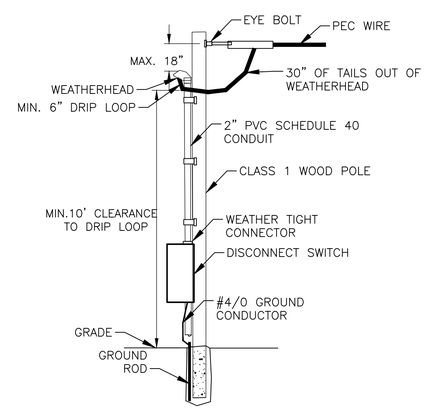

NOTES:

1. POLE SHALL MEET ALL REQUIREMENT OF PEC'S MEMBER OWNED POLE AND NESC CLEARANCES.
2. COORDINATE ALL RISER POLE INSTALLATION WITH PEC. INSTALLATION SHALL COMPLY WITH NEC AND NESC SPECIFICATION.

RISER POLE DETAIL

DETAIL M
NTS –

STATE OF TEXAS
JOYSON VARGHESE
134792
LICENSED
PROFESSIONAL ENGINEER
1/18/24

REV. NO.	DATE	DRWN	CHKD	REMARKS
1	1/18/24	JV	JV	ADDENDUM NO.3

DESIGNED BY: K. DINEESH
DRAWN BY: K. DINEESH
SHEET CHK'D BY: J. VARGHESE
CROSS CHK'D BY: S. MEHTA
APPROVED BY: J. VARGHESE
DATE: JANUARY 2024

CDM Smith
8310-1 N Capital of Texas Hwy, Suite 250
Austin, TX 78731
Tel: (512) 346-1100
TBPELS Firm Registration No. F-3043

CITY OF GEORGETOWN, TEXAS

CEDAR BREAKS AND D B WOOD LIFT STATIONS

ELECTRICAL DETAILS II

PROJECT NO. 2048-272644
FILE NAME: EZ02LSDT.DWG
SHEET NO.
EZ-2

XREFs: [CDMS_2234_South lake to South fork_Border, J. VARGHESE- review stamp, CDMS_2234_ LS_Border, DetailBorder] Images: []
Last saved by: VARGHESSJ2 Time: 1/18/2024 1:35:28 PM
pw:\\cdmsmith-az02-pw.bentley.com:pw_pi\2048\272644\04 Design Services NM_50%\09 Electrical\10 BIM_CADD\EZ02LSDT.dwg
©2023 CDM SMITH ALL RIGHTS RESERVED.
REUSE OF DOCUMENTS: THESE DOCUMENTS AND DESIGNS PROVIDED BY PROFESSIONAL SERVICE, INCORPORATED HEREIN, ARE THE PROPERTY OF CDM SMITH AND ARE NOT TO BE USED, IN WHOLE OR PART, FOR ANY OTHER PROJECT WITHOUT THE WRITTEN AUTHORIZATION OF CDM SMITH.

Plotted: 1/18/2024 2:14:06 PM

GENERAL INSTRUMENT OR FUNCTION SYMBOLS

SHARED DISPLAY/ SHARED CONTROL				
PRIMARY CHOICE	SECONDARY CHOICE	COMPUTER SOFTWARE	DISCRETE	LOCATION AND ACCESSIBILITY
				FIELD MOUNTED AND NORMALLY OPERATOR ACCESSIBLE
				PRIMARY CONTROL PANEL MOUNTED AND NORMALLY OPERATOR ACCESSIBLE
				PRIMARY CONTROL PANEL MOUNTED AND NOT NORMALLY OPERATOR ACCESSIBLE
				SECONDARY CONTROL PANEL MOUNTED AND NORMALLY OPERATOR ACCESSIBLE
				SECONDARY CONTROL PANEL MOUNTED AND NOT NORMALLY OPERATOR ACCESSIBLE

INSTRUMENTS SHARING COMMON HOUSING

PILOT LIGHT

DENOTES EQUIPMENT PROVIDED BY VENDOR

DENOTES EXISTING EQUIPMENT OR EQUIPMENT PROVIDED BY OTHERS UNDER A SEPARATE CONTRACT.

TYPICAL TAG NUMBERS & DESIGNATION

HS 1000 1A HOA AO

- INSTRUMENT TYPE SEE "INSTRUMENTATION FUNCTION CODE" TABLE
- ADDITIONAL INSTRUMENT IDENTIFICATION SEE "HAND SWITCH ABBREVIATIONS"
- INSTRUMENT IDENTIFICATION (FIRST TWO DIGITS DENOTE ASSOCIATED AREA)
- USED TO DENOTE THE DIVISION THE INSTRUMENT IS SUPPLIED UNDER OR IF THE INSTRUMENT IS EXISTING OR FUTURE.
- WHEN USED, LETTER DISTINGUISHES BETWEEN MULTIPLE, SIMILAR DEVICES.
- USED WHEN MULTIPLE TRAINS ARE USED AND REPRESENTS THE TRAIN NUMBER.

HAND SWITCH ABBREVIATIONS

AO = AUTO/OFF
AM = AUTO/MANUAL
CM = COMPUTER/MANUAL
CL = COMPUTER/LOCAL
E-STOP = EMERGENCY STOP
FR = FORWARD/REVERSE
FOR = FORWARD/OFF/REVERSE
FS = FAST SLOW
FOS = FAST/OFF/SLOW
HOA = HAND/OFF/AUTO
LLS = LEAD/LAG/STANDBY
LOC = LOCAL/OFF/COMPUTER
TSH = HIGH TEMPERATURE SWITCH
MSH = HIGH MOISTURE SWITCH
LOR = LOCAL/OFF/REMOTE
LOS = LOCKOUT/STOP
LA = LOCAL/AUTO
LR = LOCAL/REMOTE
OC = OPEN/CLOSE
OCA = OPEN/CLOSE/AUTO
OO = ON/OFF
OOA = ON/OFF/AUTO
OSC = OPEN/STOP/CLOSE
RDA = RECIRCULATE/DISCHARGE/AUTO
RSL = RAISE/STOP/LOWER
SS = START/STOP
SOR = START/OFF/RESET
LSHH = HIGH HIGH LEVEL SWITCH
LSH = HIGH LEVEL SWITCH
LS = LEVEL SWITCH
LSL = LOW LEVEL SWITCH
LSLL = LOW LOW LEVEL SWITCH

INSTRUMENTATION FUNCTION CODE

	FIRST LETTERS		SUCCEEDING LETTERS		
	COLUMN 1	COLUMN 2	COLUMN 3	COLUMN 4	COLUMN 5
	MEASURED/INITIATING VARIABLE	VARIABLE MODIFIER	READOUT/PASSIVE FUNCTION	OUTPUT/ACTIVE FUNCTION	FUNCTION MODIFIER
A	ANALYSIS		ALARM		
B	BURNER, COMBUSTION		USER'S CHOICE	USER'S CHOICE	USER'S CHOICE
C	USER'S CHOICE			CONTROL	CLOSED
D	USER'S CHOICE	DIFFERENCE, DIFFERENTIAL			DEVIATION
E	VOLTAGE		SENSOR, PRIMARY ELEMENT		
F	FLOW, FLOW RATE	RATIO			
G	USER'S CHOICE		GLASS, GAUGE, VIEWING DEVICE		
H	HAND				HIGH
I	CURRENT		INDICATE		
J	POWER		SCAN		
K	TIME, SCHEDULE	TIME RATE OF CHANGE		CONTROL STATION	
L	LEVEL		LIGHT		LOW
M	MOISTURE				MIDDLE, INTERMEDIATE
N	USER'S CHOICE		USER'S CHOICE	USER'S CHOICE	USER'S CHOICE
O	USER'S CHOICE		ORIFICE, RESTRICTION		OPEN
P	PRESSURE		POINT (TEST CONNECTION)		
Q	QUANTITY	INTEGRATE, TOTALIZE	INTEGRATE, TOTALIZE		
R	RADIATION		RECORD		RUN
S	SPEED, FREQUENCY	SAFETY		SWITCH	STOP
T	TEMPERATURE			TRANSMIT	
U	MULTIVARIABLE		MULTIFUNCTION	MULTIFUNCTION	
V	VIBRATION, MECHANICAL, ANALYSIS			VALVE, DAMPER, LOUVER	
W	WEIGHT, FORCE		WELL, PROBE		
X	UNCLASSIFIED (1)	X-AXIS	ACCESSORY DEVICES, UNCLASSIFIED (1)	UNCLASSIFIED (1)	UNCLASSIFIED (1)
Y	EVENT, STATE, PRESENCE	Y-AXIS		AUXILIARY DEVICES	
Z	POSITION, DIMENSION	Z-AXIS, SAFETY INSTRUMENT SYSTEM		DRIVER, ACTUATOR, UNCLASSIFIED, FINAL CONTROL ELEMENT	

TABLE NOTES:
(1) WHEN USED SYMBOL OR SIGNAL LINE IS ANNOTATED.

MISCELLANEOUS SYMBOLS

- M — MOTOR, VARIABLE SPEED
- M — MOTOR, CONSTANT SPEED
- MCC — INDICATES INTERLOCK OR LOGIC IN A MOTOR CONTROL CENTER
- I — INDICATES GENERAL OR MISCELLANEOUS HARDWIRED INTERLOCK
- MS — MOTOR STARTER
- SCR — SILICONE CONTROL RECTIFIER
- VFD — VARIABLE FREQUENCY DRIVE
- P — PURGE OR FLUSHING DEVICE
- ISR — INTRINSICALLY SAFE RELAY
- ISB — INTRINSICALLY SAFE BARRIER
- I/I — SIGNAL SPLITTER

INSTRUMENT LINE SYMBOLS

- ELECTRICAL SIGNAL
- COMMUNICATION LINK – COPPER (CAT 6)
- COMMUNICATION LINK – SERIAL
- VENDOR SUPPLIED CABLE
- COMMUNICATION LINK – FIBER OPTICS
- COMMUNICATION LINK – CELLULAR
- COMMUNICATION LINK – COAXIAL

ELECTRICAL / AIR SOURCES

- UPS — UPS POWERED ELECTRICAL SOURCE
- ES — ELECTRICAL SOURCE
- IA — INSTRUMENT AIR SOURCE

I/O SIGNALS

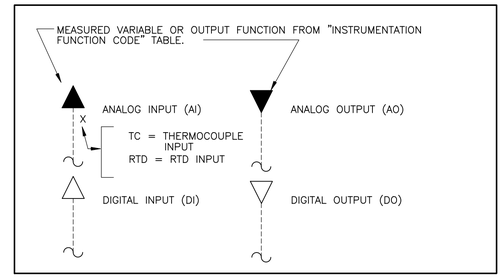

PRIMARY ELEMENTS

- FE — MAGNETIC FLOW METER
- FE — TURBINE OR PROPELLER FLOW METER
- FE — AVERAGING PITOT TUBE
- FE — ULTRASONIC FLOW METER
- FI — ROTAMETER
- FE — WEIR
- FE — ORIFICE PLATE
- FE — VENTURI TUBE
- FE — FLUME
- FE — GENERAL INSERTION FLOW METER (X; IM=INSERT MAG)
- FE — THERMAL MASS FLOW METER
- LE — FLOAT SWITCH
- LE — ULTRASONIC LEVEL SENSOR
- LE — RADAR LEVEL SENSOR
- LE — CAPACITANCE LEVEL SENSOR
- LE — PRESSURE SENSING LEVEL METER
- PI — PRESSURE GAUGE
- PDI — DIFFERENTIAL PRESSURE GAUGE
- TI — TEMPERATURE GAUGE
- AE — GENERAL ANALYZER (X; EXTENDED POWER SOURCE; pH=pH, DO=DISSOLVED OXYGEN, H2S=HYDROGEN SULFIDE, LEL=% LOWER EXPLOSIVE LIMIT, O2=OXYGEN, O3=OZONE, NH3=NITRATE, TURB=TURBIDITY, FL=FLUORIDE)

GENERAL NOTES

1. THIS LEGEND APPLIES TO P&IDS ONLY AND MAY DIFFER FROM LEGENDS FOR OTHER SHEETS.

2. IN GENERAL THIS LEGEND SHEET AND THE P&IDS ARE BASED ON THE INTERNATIONAL SOCIETY OF AUTOMATION (ISA) STANDARDS AND RECOMMENDED PRACTICES FOR INSTRUMENTATION AND CONTROL. SOME MODIFICATIONS, ADDITIONS AND ALTERATIONS HAVE BEEN MADE AS REQUIRED TO ACCOMMODATE PROJECT REQUIREMENTS.

3. SOME PROCESS ITEMS SUCH AS EQUIPMENT ISOLATION VALVES, BYPASS LINES, ETC., WHICH ARE NOT CRITICAL FOR AN UNDERSTANDING OF THE INSTRUMENTATION FUNCTIONS ARE NOT SHOWN ON THE P&IDS.

4. SEE ELECTRICAL AND MECHANICAL SHEETS AND SPECIFICATIONS FOR ADDITIONAL CONTROL AND INTERLOCK REQUIREMENTS.

5. LIGHTER WEIGHT LINES, SHOWN AS ———— , INDICATE EQUIPMENT, INSTRUMENTS OR PIPING THAT ARE EXISTING. WEIGHTED LINES, SHOWN AS OR HEAVIER ━━━━ , INDICATE EQUIPMENT, INSTRUMENTS OR PIPING THAT ARE NEW. DASHED WEIGHTED LINES, SHOWN AS —·—·—·— , INDICATED EQUIPMENT, INSTRUMENTS OR PIPING THAT ARE GROUPED AS A PACKAGE.

GENERAL ABBREVIATIONS

AI	ANALOG IN
AO	ANALOG OUT
CPU	CENTRAL PROCESSOR UNIT
DI	DIGITAL OR DISCRETE INPUT
DO	DIGITAL OUTPUT
FC	FAIL CLOSED
FO	FAIL OPEN OR FIBER OPTIC
HMI	HUMAN MACHINE INTERFACE
LCP	LOCAL CONTROL PANEL
LCS	LOCAL CONTROL STATION
MCC	MOTOR CONTROL CENTER
MCP	MASTER CONTROL PANEL
NC	NORMALLY CLOSED
NO	NORMALLY OPEN
OIT	OPERATOR INTERFACE TERMINAL
PLC	PROGRAMMABLE LOGIC CONTROLLER
RIO	REMOTE INPUT/OUTPUT
SCADA	SUPERVISORY, CONTROL AND DATA ACQUISITION
UPS	UNINTERRUPTIBLE POWER SUPPLY
VFD	VARIABLE FREQUENCY DRIVE
SSRVS	SOLID STATE REDUCED VOLTAGE STARTER

PROCESS FLOW STREAM ABBREVIATION

REFERENCE SHEET M-1 (MECHANICAL LEGEND) FOR A FULL LIST PROCESS FLOW ABBREVIATION.

A. Paithankar
STATE OF TEXAS
ANJALI PAITHANKAR
121554
LICENSED
PROFESSIONAL ENGINEER
12/09/2023

REV. NO.	DATE	DRWN	CHKD	REMARKS

DESIGNED BY: K.KHALDI
DRAWN BY: K.KHALDI
SHEET CHK'D BY: A.PAITHANKAR
CROSS CHK'D BY: Y.ZHONG
APPROVED BY: A.PAITHANKAR
DATE: DECEMBER 2023

CDM Smith
8310-1 N Capital of Texas Hwy, Suite 250
Austin, TX 78731
Tel: (512) 346-1100
TBPELS Firm Registration No. F-3043

CITY OF GEORGETOWN, TEXAS

CEDAR BREAKS AND D B WOOD LIFT STATIONS

INSTRUMENTATION LEGEND I
NOTES AND ABBREVIATIONS

PROJECT NO. 2048-272644
FILE NAME: I-1
SHEET NO. I-1

XREFs: [CDMS_2234, J.Haire- review stamp] Images: []
Last saved by: KHALDIK Time: 9/22/2022 3:46:30 PM
pw:\\cdmsmith-a02-pw.bentley.com:PW_EXT\124899\270868\04 Design Services LS NM_90%\10 Instrumentation\10 CADD\I-1.dwg
©2023 CDM SMITH ALL RIGHTS RESERVED.
REUSE OF DOCUMENTS: THESE DOCUMENTS AND DESIGNS PROVIDED BY PROFESSIONAL SERVICE, INCORPORATED HEREIN, ARE THE PROPERTY OF CDM SMITH AND ARE NOT TO BE USED, IN WHOLE OR PART, FOR ANY OTHER PROJECT WITHOUT THE WRITTEN AUTHORIZATION OF CDM SMITH.

Plotted: 12/13/2023 9:33:08 AM

TYPICAL PIPE TAG NUMBERS & DESIGNATION

6"–RW–DI–L12W01

- FLOW DIRECTION
- LINE NUMBER (FIRST TWO DIGITS DENOTE ASSOCIATED AREA. IF 'W' IS PRESENT, PIPE REMAINS WITHIN ASSOCIATED AREA. IF NOT PRESENT, THEN PIPE RUNS FROM AREA DENOTED BY FIRST TWO DIGITS TO AREA DENOTED BY SECOND TWO DIGITS)
- SPEC
- SERVICE
- SIZE

PIPE LINE SYMBOLS

- PIPE UNION
- FLEXIBLE BELLOWS TYPE COUPLING
- FLEXIBLE COUPLING (GENERAL SYMBOL)
- QUICK CONNECT TYPE COUPLING
- HOSE CONNECTION
- Y–STRAINER
- REDUCER/ENLARGER
- BLIND FLANGE
- PLAIN END x PLAIN END PIPE COUPLING RESTRAINED
- CONTINUED PIPE
- CONCENTRIC FLANGE MOUNTED DIAPHRAGM SEAL
- THREADED DIAPHRAGM SEAL
- OPEN EQUIPMENT DRAIN
- DIFFUSER
- BASKET STRAINER
- FILTER
- PULSATION DAMPNER
- MAJOR PROCESS LINE
- MINOR PROCESS LINE
- DOUBLE WALLED PIPE
- E (S) — ELECTRIC (OR STEAM) TRACING
- PROCESS FLUID / DWG NO. / TO/FROM LOCATION — DRAWING CONTINUATION

GATE SYMBOLS

- SLUICE GATE (SLG)
- SLIDE GATE (SG)
- WEIR SLIDE GATE (WSG)
- BUTTERFLY GATE
- BULK HEAD GATE/STOP LOG

VALVE ACTUATORS

- HAND (MANUALLY) OPERATED
- DIAPHRAGM, SPRING OPPOSED
- DIAPHRAGM, PRESSURE–BALANCED
- M — ROTARY MOTOR. (SHOWN TYPICALLY WITH ELECTRIC SIGNAL. MAY BE HYDRAULIC OR PNEUMATIC)
- S — SOLENOID
- E/H — ELECTROHYDRAULIC
- CYLINDER, SINGLE–ACTING, SPRING OPPOSED WITHOUT POSITIONER OR PILOT.
- CYLINDER, DOUBLE ACTING, WITHOUT POSITIONER OR PILOT
- EXAMPLE OF CYLINDER WITH POSITIONER
- ANY CYLINDER THAT IS ASSEMBLED WITH A PILOT SO THAT ASSEMBLY IS ACTUATED BY ONE CONTROLLED INPUT. PILOT MAY BE POSITIONER, SOLENOID VALVE, SIGNAL CONVERTER, etc.
- FLOAT ACTUATOR

VALVE SYMBOLS

- GATE VALVE (GV)
- PLUG VALVE (PV)
- BUTTERFLY VALVE (BFV)
- BALL VALVE (BV)
- GLOBE VALVE (GLV)
- PINCH VALVE (PCHV)
- DIAPHRAGM VALVE (DV)
- WEIGHTED FOOT VALVE
- SWING CHECK VALVE (CV)
- BALL CHECK VALVE (BCV)
- THREE WAY BALL VALVE (BV)
- S — SOLENOID VALVE (SV)
- NEEDLE VALVE (NV)
- KNIFE VALVE (KNV)
- MUD VALVE (MV)
- PRESSURE REGULATING VALVE (PREGV)
- BACK PRESSURE REGULATING VALVE (BPV)
- DIFFERENTIAL PRESSURE REGULATING VALVE W/ EXTERIOR TAPS
- SELF–CONTAINED DIFFERENTIAL PRESSURE REGULATING VALVE
- S — SELF–CONTAINED DIFFERENTIAL PRESSURE REGULATING VALVE (SOLENOID OPERATED)
- PRESSURE RELIEF VALVE (PRV)
- VACUUM RELIEF VALVE (VRV)
- COMBINATION AIR VALVE (CAV)
- AIR RELEASE VALVE (ARV)
- BACKFLOW PREVENTER

TYPICAL EQUIPMENT TAG NUMBERS & DESIGNATION

P–1000–1A

- WHEN USED, LETTER DISTINGUISHES BETWEEN MULTIPLE, SIMILAR DEVICES.
- USED WHEN MULTIPLE TRAINS ARE USED AND REPRESENTS THE TRAIN NUMBER.
- EQUIPMENT IDENTIFICATION (FIRST TWO DIGITS DENOTE ASSOCIATED AREA)
- EQUIPMENT TYPE

PROCESS EQUIPMENT

- SUBMERSIBLE PUMP

A. Paithankar

STATE OF TEXAS
ANJALI PAITHANKAR
121554
LICENSED
PROFESSIONAL ENGINEER

12/09/2023

REV. NO.	DATE	DRWN	CHKD	REMARKS

DESIGNED BY: K.KHALDI
DRAWN BY: K. KHALDI
SHEET CHK'D BY: A.PAITHANKAR
CROSS CHK'D BY: Y.ZHONG
APPROVED BY: A.PAITHANKAR
DATE: DECEMBER 2023

CDM Smith
8310-1 N Capital of Texas Hwy, Suite 250
Austin, TX 78731
Tel: (512) 346-1100
TBPELS Firm Registration No. F-3043

CITY OF GEORGETOWN, TEXAS

CEDAR BREAKS AND D B WOOD LIFT STATIONS

INSTRUMENTATION LEGEND II
NOTES AND ABBREVIATIONS

PROJECT NO. 2048–272644
FILE NAME: I–2
SHEET NO.
I-2

XREFs: [CDMS_2234, J.Haire- review stamp] Images: []
Last saved by: KHALDIK Time: 9/2/2022 3:50:20 PM
pw:\\cdmsmith-az02-pw.bentley.com:PW_EXT\124899\270868\04 Design Services LS NM_903X\10 Instrumentation\10 CADD\I-2.dwg
© 2023 CDM SMITH ALL RIGHTS RESERVED.
REUSE OF DOCUMENTS: THESE DOCUMENTS AND DESIGNS PROVIDED BY PROFESSIONAL SERVICE, INCORPORATED HEREIN, ARE THE PROPERTY OF CDM SMITH AND ARE NOT TO BE USED, IN WHOLE OR PART, FOR ANY OTHER PROJECT WITHOUT THE WRITTEN AUTHORIZATION OF CDM SMITH.

Plotted: 12/13/2023 9:33:58 AM

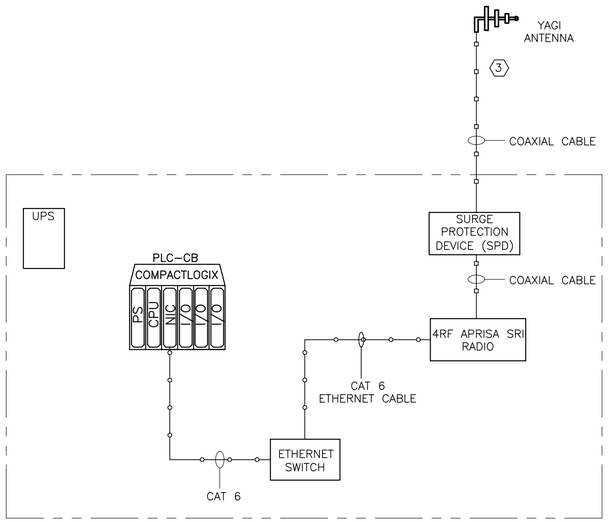

CEDAR BREAKS LIFT STATION RTU ENCLOSURE

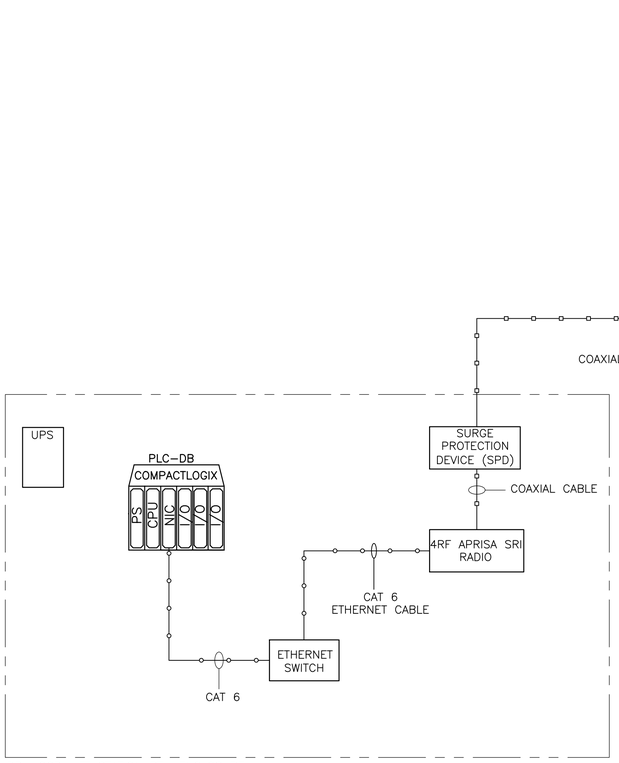

DB WOOD LIFT STATION RTU ENCLOSURE

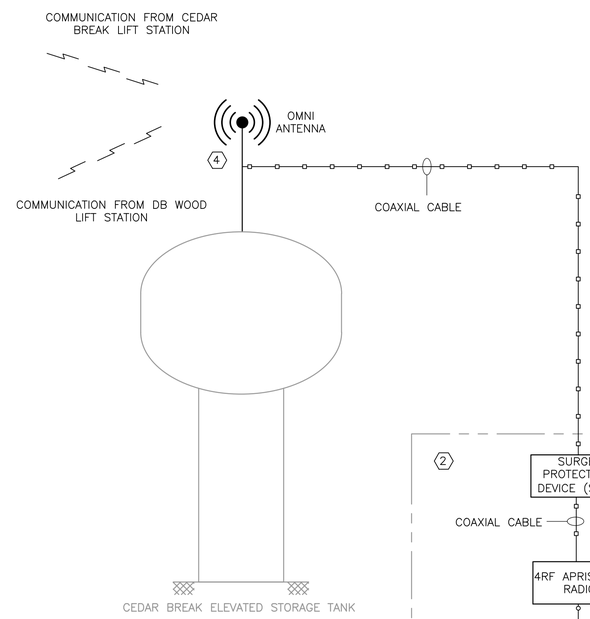

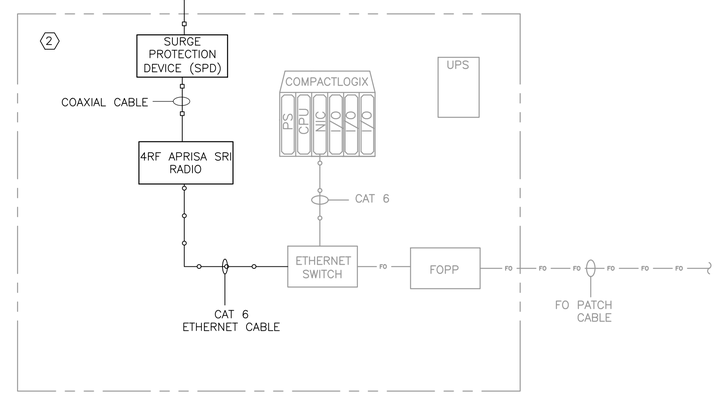

EXISTING CEDAR BREAK EST RTU ENCLOSURE

KEY NOTES:

1. INTEGRATE AND PROVIDE PLC AND HMI PROGRAMMING MODIFICATION TO THE EXISTING CITY CENTRAL PLANT SCADA SYSTEM WITH ASSISTANCE OF THE CITY TO ACCOMMODATE AND ADD SIGNALS FROM THE CEDAR BREAK AND DB WOOD PUMP STATIONS. CONFIRM SIGNALS FROM BOTH PUMP STATIONS ARE RECEIVED AT CITY CENTRAL AND CAN BE MONITORED AT SCADA. REFER TO SPECIFICATION 406100.

2. MODIFY THE EXISTING CEDAR BREAK EST RTU ENCLOSURE TO ADD APRISA SRI RADIO AND A SURGE PROTECTION DEVICE FOR THE RADIO. COORDINATE WORK WITH THE CITY STAFF.

3. A POLE FOR RADIO ANTENNA MUST BE PROVIDED AT THE CEDAR BREAK LIFT STATION. A MINIMUM 10 FT POLE MUST BE PROVIDED FOR THE ANTENNA AND IT MUST BE INSTALLED SUCH THAT THERE IS A CLEAR LINE OF SIGHT TO CEDAR BREAK ELEVATED STORAGE TANK RADIO ANTENNA. FINAL HEIGHT OF ANTENNA TO BE DETERMINED IN ACCORDANCE WITH A RADIO PATH STUDY RECOMMENDATION DURING CONSTRUCTION. REFER TO INSTALLATION DETAIL J ON DRAWING IZ–3.

4. A POLE FOR RADIO ANTENNA MUST BE PROVIDED AT THE CEDAR BREAK ELEVATED STORAGE TANK. A MINIMUM 10 FT POLE MUST BE PROVIDED FOR THE ANTENNA AND IT MUST BE INSTALLED SUCH THAT THERE IS A CLEAR LINE OF SIGHT TO CEDAR BREAK AND DB WOOD LIFT STATIONS RADIO ANTENNAS. FINAL HEIGHT OF ANTENNA TO BE DETERMINED IN ACCORDANCE WITH A RADIO PATH STUDY RECOMMENDATION DURING CONSTRUCTION. REFER TO INSTALLATION DETAIL C ON DRAWING IZ–1.

EXISTING CEDAR BREAK RTU ENCLOSURE (PHOTOGRAPH FOR REFERENCE)

A. Paithankar

STATE OF TEXAS
ANJALI PAITHANKAR
121554
LICENSED
PROFESSIONAL ENGINEER

12/09/2023

REV. NO.	DATE	DRWN	CHKD	REMARKS

DESIGNED BY: K.KHALDI
DRAWN BY: K. KHALDI
SHEET CHK'D BY: A.PAITHANKAR
CROSS CHK'D BY: Y.ZHONG
APPROVED BY: A.PAITHANKAR
DATE: DECEMBER 2023

CDM Smith
8310-1 N Capital of Texas Hwy, Suite 250
Austin, TX 78731
Tel: (512) 346-1100
TBPELS Firm Registration No. F-3043

CITY OF GEORGETOWN, TEXAS

CEDAR BREAKS AND D B WOOD LIFT STATIONS

SCADA SYSTEM ARCHITECTURE

PROJECT NO. 2048–272644
FILE NAME: I–3

SHEET NO.
I-3

xREFs: [CDMS_2234, J.Hoire- review stamp] Images: []
Last saved by: KHALDK Time: 9/8/2022 2:04:56 PM
pw:\\cdmsmith-az02-pw.bentley.com:PW_EXT\124999\270868\04 Design Services LS NM_90%\10 Instrumentation\10 CADD\I-3.dwg
© 2023 CDM SMITH ALL RIGHTS RESERVED.
REUSE OF DOCUMENTS: THESE DOCUMENTS AND DESIGNS PROVIDED BY PROFESSIONAL SERVICE, INCORPORATED HEREIN, ARE THE PROPERTY OF CDM SMITH AND ARE NOT TO BE USED, IN WHOLE OR PART, FOR ANY OTHER PROJECT WITHOUT THE WRITTEN AUTHORIZATION OF CDM SMITH.

Plotted: 12/13/2023 9:34:23 AM

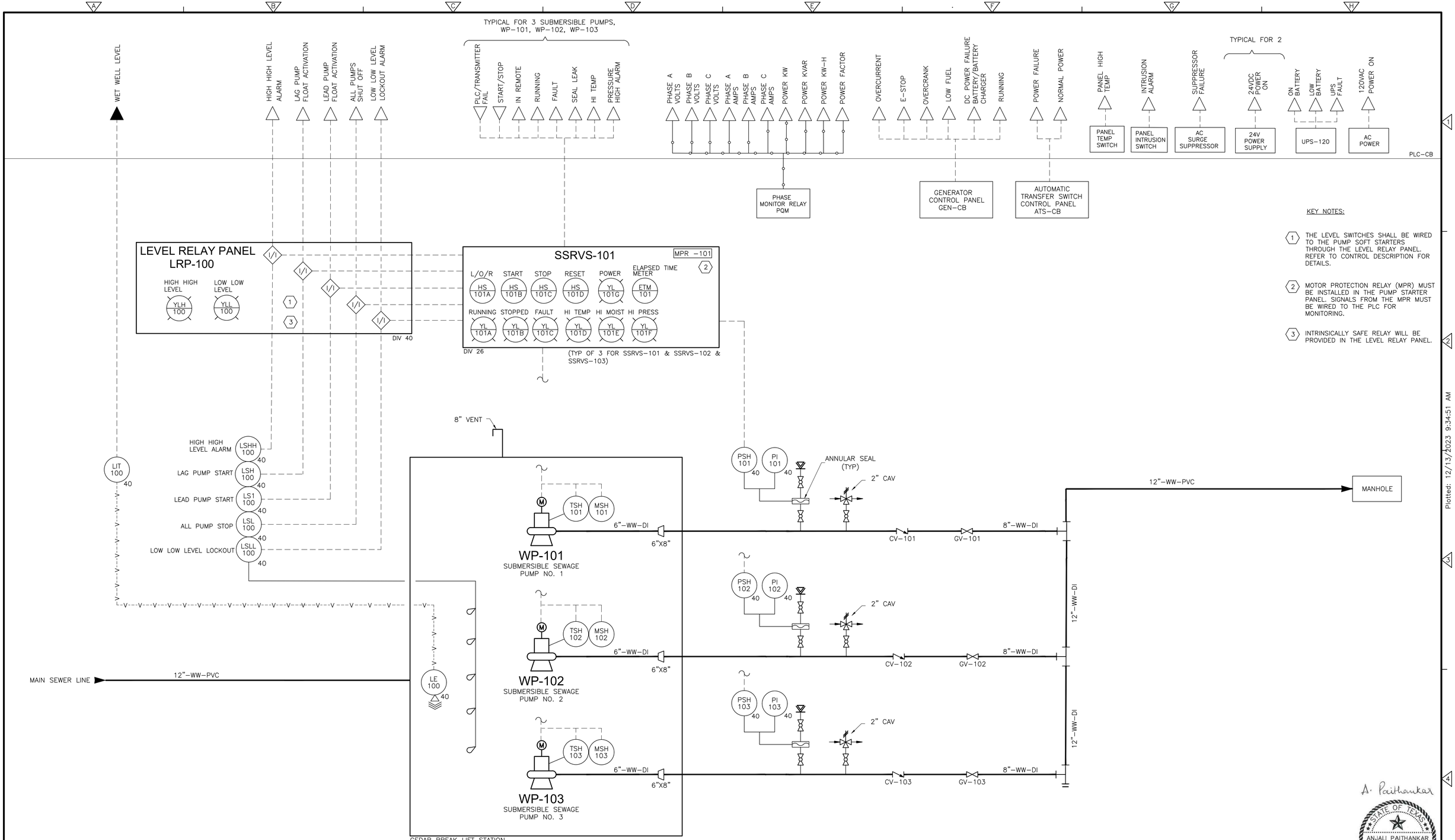

KEY NOTES:

1. THE LEVEL SWITCHES SHALL BE WIRED TO THE PUMP SOFT STARTERS THROUGH THE LEVEL RELAY PANEL. REFER TO CONTROL DESCRIPTION FOR DETAILS.
2. MOTOR PROTECTION RELAY (MPR) MUST BE INSTALLED IN THE PUMP STARTER PANEL. SIGNALS FROM THE MPR MUST BE WIRED TO THE PLC FOR MONITORING.
3. INTRINSICALLY SAFE RELAY WILL BE PROVIDED IN THE LEVEL RELAY PANEL.

A. Paithankar

STATE OF TEXAS
ANJALI PAITHANKAR
121554
LICENSED PROFESSIONAL ENGINEER

12/09/2023

REV. NO.	DATE	DRWN	CHKD	REMARKS

DESIGNED BY: K.KHALDI
DRAWN BY: K. KHALDI
SHEET CHK'D BY: A.PAITHANKAR
CROSS CHK'D BY: Y.ZHONG
APPROVED BY: A.PAITHANKAR
DATE: DECEMBER 2023

CDM Smith
8310-1 N Capital of Texas Hwy, Suite 250
Austin, TX 78731
Tel: (512) 346-1100
TBPELS Firm Registration No. F-3043

CITY OF GEORGETOWN, TEXAS

CEDAR BREAKS AND D B WOOD LIFT STATIONS

CEDAR BREAKS LIFT STATION
PROCESS AND INSTRUMENTATION DIAGRAM

PROJECT NO. 2048-272644
FILE NAME: I-4
SHEET NO.
I-4

XREFs: [CDMS_2234 J.Hoire- review stamp] Images: []
Last saved by: KHALDIK Time 9/8/2022 12:04:12 PM
pw:\\cdmsmith-azc2-pw.bentley.com:PW_EXT\124899\270868\04 Design Services LS NM_90%\10 Instrumentation\10 CADD\I-4.dwg
©2023 CDM SMITH ALL RIGHTS RESERVED.
REUSE OF DOCUMENTS: THESE DOCUMENTS AND DESIGNS PROVIDED BY PROFESSIONAL SERVICE, INCORPORATED HEREIN, ARE THE PROPERTY OF CDM SMITH AND ARE NOT TO BE USED, IN WHOLE OR PART, FOR ANY OTHER PROJECT WITHOUT THE WRITTEN AUTHORIZATION OF CDM SMITH.

Plotted: 12/13/2023 9:34:51 AM

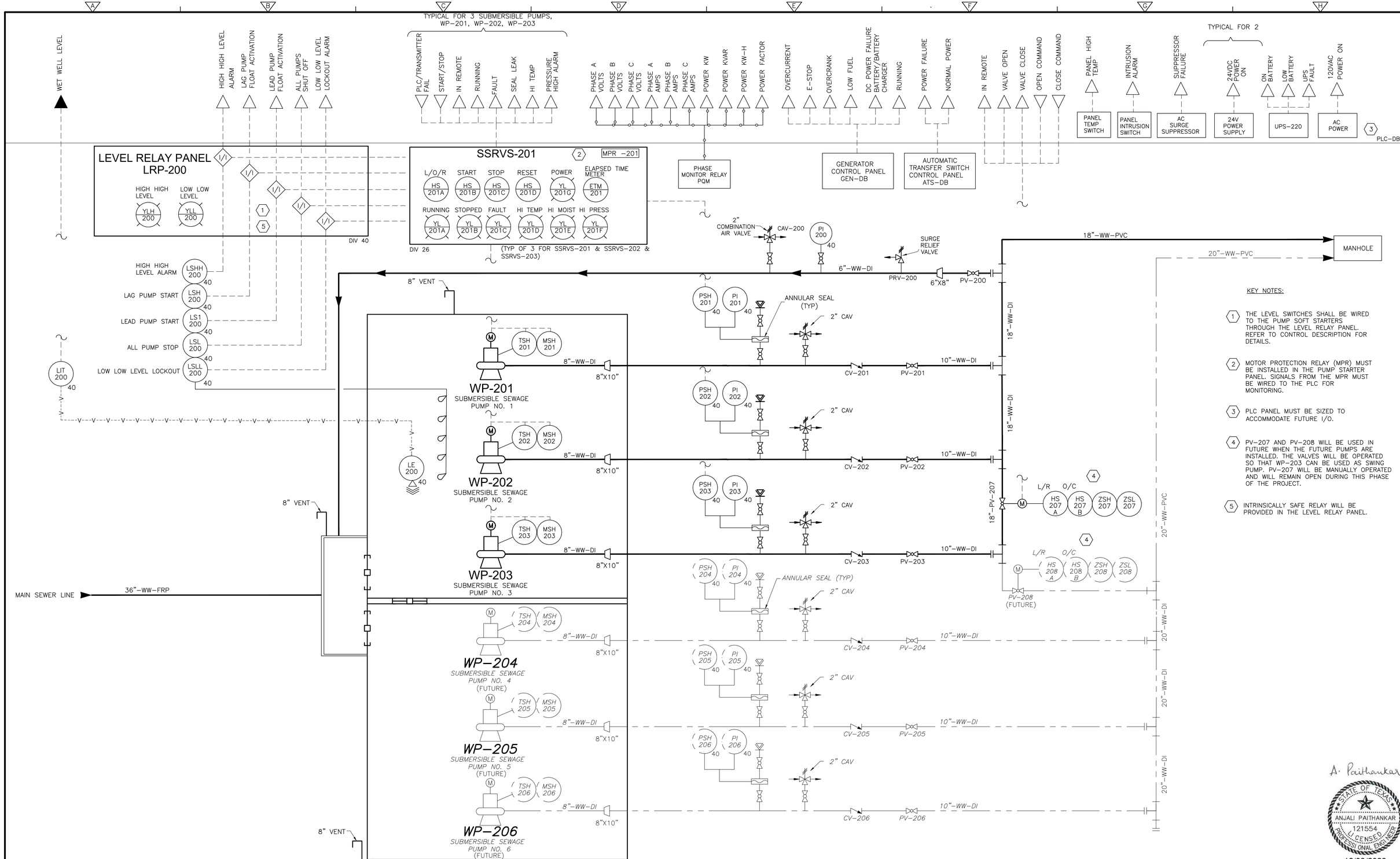

KEY NOTES:

1. THE LEVEL SWITCHES SHALL BE WIRED TO THE PUMP SOFT STARTERS THROUGH THE LEVEL RELAY PANEL. REFER TO CONTROL DESCRIPTION FOR DETAILS.
2. MOTOR PROTECTION RELAY (MPR) MUST BE INSTALLED IN THE PUMP STARTER PANEL. SIGNALS FROM THE MPR MUST BE WIRED TO THE PLC FOR MONITORING.
3. PLC PANEL MUST BE SIZED TO ACCOMMODATE FUTURE I/O.
4. PV-207 AND PV-208 WILL BE USED IN FUTURE WHEN THE FUTURE PUMPS ARE INSTALLED. THE VALVES WILL BE OPERATED SO THAT WP-203 CAN BE USED AS SWING PUMP. PV-207 WILL BE MANUALLY OPERATED AND WILL REMAIN OPEN DURING THIS PHASE OF THE PROJECT.
5. INTRINSICALLY SAFE RELAY WILL BE PROVIDED IN THE LEVEL RELAY PANEL.

A. Paithankar

STATE OF TEXAS
ANJALI PAITHANKAR
121554
LICENSED PROFESSIONAL ENGINEER

12/09/2023

REV. NO.	DATE	DRWN	CHKD	REMARKS

DESIGNED BY: K.KHALDI
DRAWN BY: K. KHALDI
SHEET CHK'D BY: A.PAITHANKAR
CROSS CHK'D BY: Y.ZHONG
APPROVED BY: A.PAITHANKAR
DATE: DECEMBER 2023

CDM Smith
8310-1 N Capital of Texas Hwy, Suite 250
Austin, TX 78731
Tel: (512) 346-1100
TBPELS Firm Registration No. F-3043

CITY OF GEORGETOWN, TEXAS

CEDAR BREAKS AND D B WOOD LIFT STATIONS

D B WOOD LIFT STATION
PROCESS AND INSTRUMENTATION DIAGRAM

PROJECT NO. 2048-272644
FILE NAME: I-5
SHEET NO.
I-5

XREFs: [CDMS_2234, J.Haire- review stamp] Images: []
Last saved by: KHALDIK Time: 9/8/2022 12:04:12 PM
pw:\\cdmsmith-gz02-pw.bentley.com:PW_EXT\124899\270866\04 Design Services LS NM_90%\10 Instrumentation\10 CADD\I-4.dwg
© 2023 CDM SMITH ALL RIGHTS RESERVED
REUSE OF DOCUMENTS: THESE DOCUMENTS AND DESIGNS PROVIDED BY PROFESSIONAL SERVICE, INCORPORATED HEREIN, ARE THE PROPERTY OF CDM SMITH AND ARE NOT TO BE USED, IN WHOLE OR PART, FOR ANY OTHER PROJECT WITHOUT THE WRITTEN AUTHORIZATION OF CDM SMITH.

Plotted: 12/13/2023 9:35:10 AM

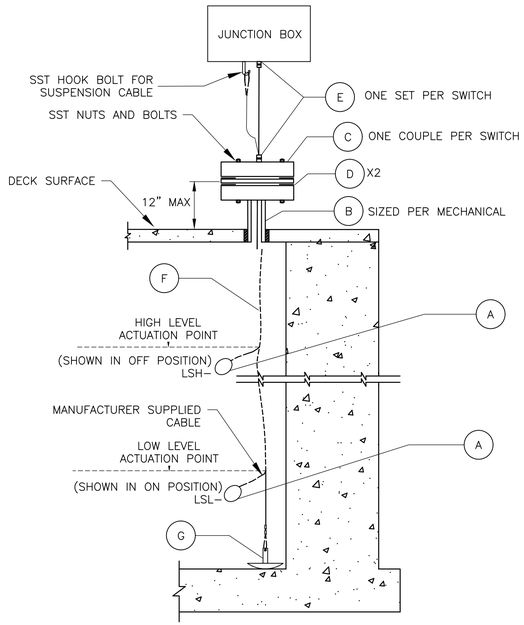

	ITEM	DESCRIPTION	MATERIAL
*	A	FLOAT SWITCH	SEE 407000
*	B	DECK FLANGE / PIPE FLANGE	304SS
*	C	BLIND FLANGE W/ WELDED HALF COUPLE	304SS
*	D	NEOPRENE GASKET	N/A
*	E	CORD GRIPS	304SS
*	F	3/8" SUSPENSION CABLE	316SS
*	G	ANCHOR	PVC COATED STEEL

* DENOTES NOTE TO CONTRACTOR

NOTES:

1. SECURE SUSPENSION CABLE ENDS WITH A MINIMUM TWO (2) CABLE CLAMPS.
2. SECURE FLOATS USING MOUNTING KITS FROM THE SAME MANUFACTURER AS THE FLOATS. MOUNTING HARDWARE SHALL BE SUITABLE FOR CONTINUAL SUBMERGENCE WITHOUT CORROSION.
3. SECURE FLOAT CABLES TO SUSPENSION CABLE WITH WIRE TIES.
4. SUITABLE MOUNT TERMINAL BOX WHERE LOCATED BY ELECTRICAL DRAWINGS. REFER TO DETAIL D, IZ-1 AND EQUIPMENT MOUNTING DETAILS (ELECTRICAL DRAWINGS) BASED ON SITE CONDITIONS.
5. ABOVE DECK HARDWARE TO BE 304SS, AND BELOW DECK HARDWARE TO BE 316SS
6. ANCHOR WITH SUFFICIENT WEIGHT TO COUNTER ACT THE BUOYANCY FROM ALL INSTALLED FLOATS ON THE SYSTEM PLUS THE SUCTION PULL OF THE PUMPS.

FLOAT SWITCH (CABLE SUSPENSION)

DETAIL A
NTS

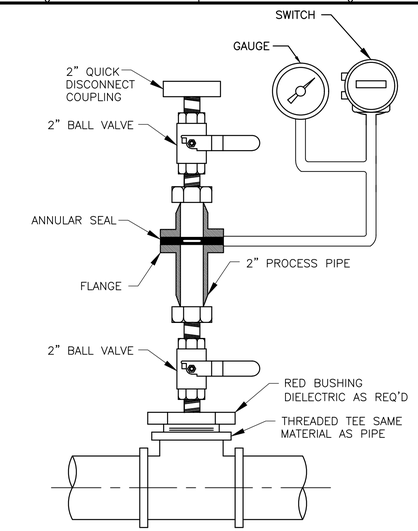

NOTES:

1. FOR PROPER OPERATION, EVACUATE SECTION BETWEEN ANNULAR SEAL AND PRESSURE DEVICE OF AIR AND SEAL WITH OIL.
2. DETAIL SHOWN IS TYPICAL FOR GAUGE/SWITCH INSTALLATION.

PRESSURE GAUGE/SWITCH (ANNULAR SEAL)

DETAIL B
NTS

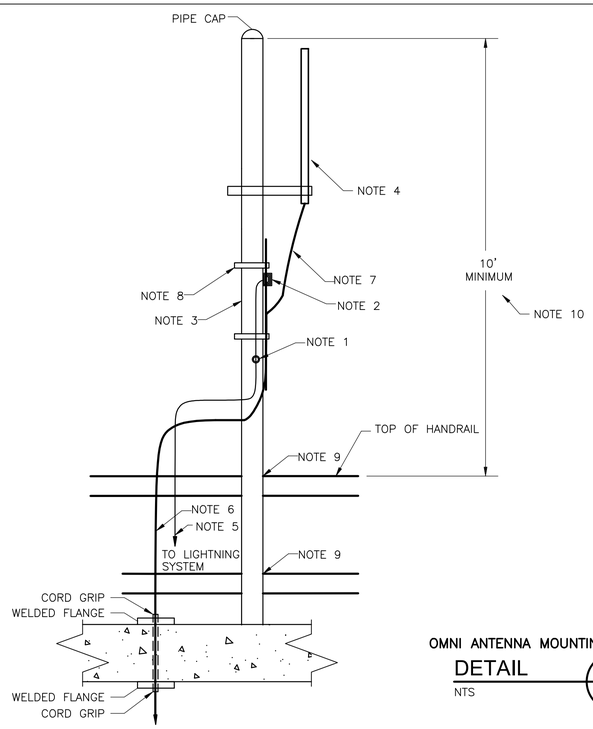

NOTES:

1. GROUND MAST WITH GROUNDING LUG AND CONNECT TO LIGHTNING PROTECTION SYSTEM PER DIVISION 26.
2. ANTENNA CABLE GROUNDING KIT. WIRE TO MAST GROUND.
3. ANTENNA MOUNTING MAST, 2" DIA. HOT DIP GALVANIZED.
4. OMNI ANTENNA.
5. #2/0 AWG COPPER GROUND WIRE.
6. ROUTE ANTENNA CABLE TO RADIO ENCLOSURE. CABLE HOUSING SHALL BE IMC OR RGS RIGID CONDUIT PIPE AT LEAST 1" IN DIAMETER
7. PROVIDE SUPERFLEX COAXIAL CABLE JUMPER FOR FINAL CONNECTION.
8. ANTENNA CABLE CLAMPS. HOT DIP GALVANIZED. CLAMP CABLE TO MAST AT 2' INTERVALS.
9. ANTENNA MAST SHALL BE SECURED TO THE STRUCTURE HANDRAILING TO WITHSTAND UP TO 130 MPH WINDS.
10. POLE FOR RADIO ANTENNA MUST BE PROVIDED. A MINIMUM 10 FT POLE MUST BE PROVIDED. FINAL HEIGHT OF ANTENNA TO BE DETERMINED IN ACCORDANCE WITH A RADIO PATH STUDY RECOMMENDATION DURING CONSTRUCTION

OMNI ANTENNA MOUNTING DETAIL

DETAIL C
NTS

NOTES:

1. SEE NOTES TO CONTRACTOR.
2. A MINIMUM OF 0.4" OF THE SENSOR RADAR SHIELD SHALL PROTRUDE FROM THE LIP OF INSERTION TO AVOID FALSE ECHOES BEING REFLECTED OFF THE FLANGE.
3. KEEP CONDUCTIVE OBJECTS (e.g. LADDERS, PIPES, ETC.) AWAY FROM PROBE TO AVOID ECHOING INTERFERENCE WITH SENSOR.
4. TO AVOID INTERFERENCE, THE SENSOR SHALL BE PLACED 1 FOOT AWAY FROM THE WALL FOR EVERY 10 FEET OF VESSEL HEIGHT. (e.g. 40 FT. WELL = 4 FT. AWAY FROM WELL WALL)

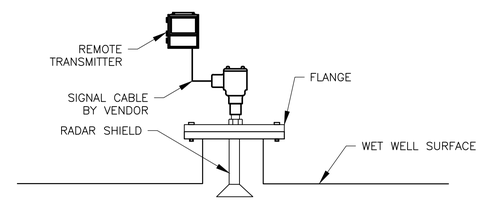

RADAR LEVEL TRANSMITTER (IN WET WELL)

DETAIL D
NTS

A. Paithankar
STATE OF TEXAS
ANJALI PAITHANKAR
121554
LICENSED
PROFESSIONAL ENGINEER
12/09/2023

REV. NO.	DATE	DRWN	CHKD	REMARKS

DESIGNED BY: K.KHALDI
DRAWN BY: K.KHALDI
SHEET CHK'D BY: A.PAITHANKAR
CROSS CHK'D BY: Y.ZHONG
APPROVED BY: A.PAITHANKAR
DATE: DECEMBER 2023

CDM Smith
8310-1 N Capital of Texas Hwy, Suite 250
Austin, TX 78731
Tel: (512) 346-1100
TBPELS Firm Registration No. F-3043

CITY OF GEORGETOWN, TEXAS

CEDAR BREAKS AND D B WOOD LIFT STATIONS

INSTRUMENTATION INSTALLATION DETAILS I

PROJECT NO. 2048-272644
FILE NAME: IZ-1
SHEET NO.
IZ-1

XREFs: [CDMS_2234, J.Haire- review stamp] Images: []
Last saved by: K4ALDK Time: 9/2/2022 3:55:14 PM
p:\\cdmsmith-a202-pw.bentley.com:PW_EXT\124899\270868\04 Design Services LS NM_903%\10 Instrumentation\10 CADD\IZ-1.dwg
©2023 CDM SMITH ALL RIGHTS RESERVED.
REUSE OF DOCUMENTS: THESE DOCUMENTS AND DESIGNS PROVIDED BY PROFESSIONAL SERVICE, INCORPORATED HEREIN, ARE THE PROPERTY OF CDM SMITH AND ARE NOT TO BE USED, IN WHOLE OR PART, FOR ANY OTHER PROJECT WITHOUT THE WRITTEN AUTHORIZATION OF CDM SMITH.
Plotted: 12/13/2023 9:35:36 AM

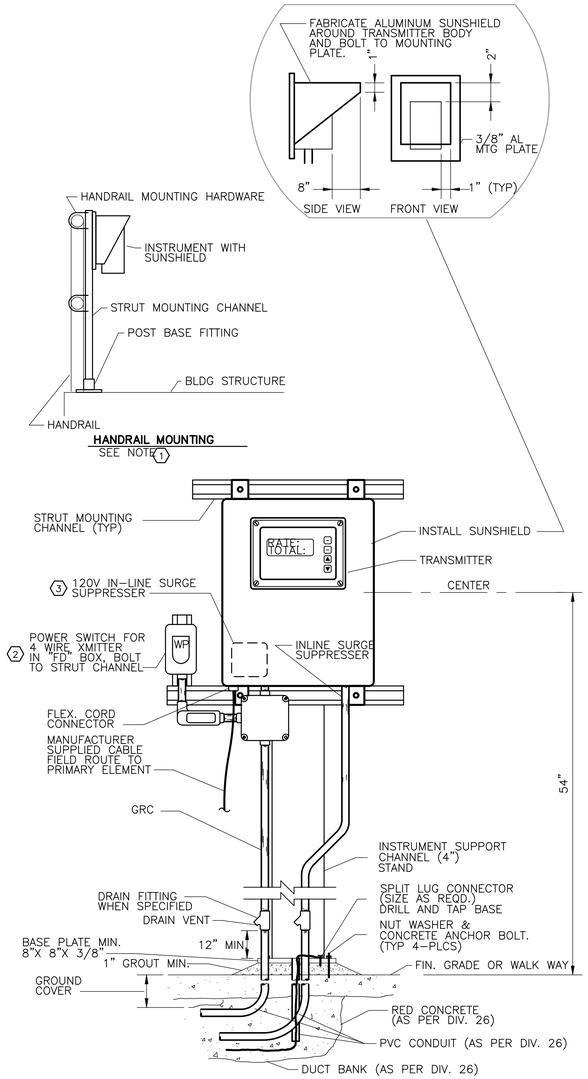

NOTES:

1. THIS DETAIL IS APPLICABLE FOR HANDRAIL MOUNTING. CONTRACTOR TO MODIFY INSTALLATION AS REQUIRED BY THE SITE CONDITIONS.
2. WHEN INSTRUMENT IS INSTALLED OUT OF SIGHT FROM THE CONTROLLING CIRCUIT BREAKER, PROVIDE POWER SWITCH FOR DISCONNECT.
3. WHEN INSTRUMENT IS INSTALLED OUTDOORS OR THE CABLE(S) LEAVE THE BUILDING ENVELOPE, PROVIDE A SILICON DIODE TYPE SURGE PROTECTION DEVICE (SPD) FOR EACH POWER, ANALOG AND COMMUNICATION CIRCUIT.
4. ORIENT INSTRUMENT FACE TOWARDS THE MAIN PATHWAY AND PROVIDE SUN SHIELD WHERE APPROPRIATE TO AVOID EXCESSIVE UV EXPOSURE AND ANY READABILITY ISSUES DUE TO GLARE.

TYPICAL INSTRUMENT INSTALLATION

DETAIL E
NTS

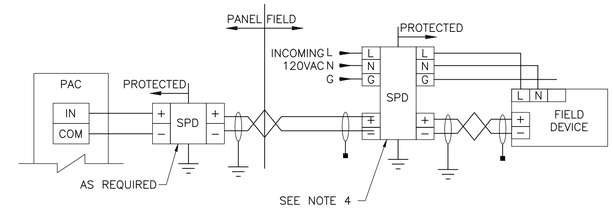

TYPICAL TRANSMITTER LOOP (EXTERNAL SOURCE: 4 WIRE)

DETAIL F
NTS

NOTES:

1. TERMINATE SPD DIRECTLY TO GROUND BUS. DO NOT DAISY CHAIN.
2. TERMINATE SHIELD/ DRAIN WIRE DIRECTLY TO SHIELD BUS/ GROUND. DO NOT DAISY CHAIN.
3. TAPE BACK SHIELD/ DRAIN WIRE WHERE INDICATED.
4. IN ADDITION TO THE CONTROL PANEL SPD, INSTALL SPD FOR EACH FIELD DEVICE THAT IS INSTALLED OUTSIDE OF THE BUILDING ENVELOPE. REFER TO SPECIFICATION 406717.

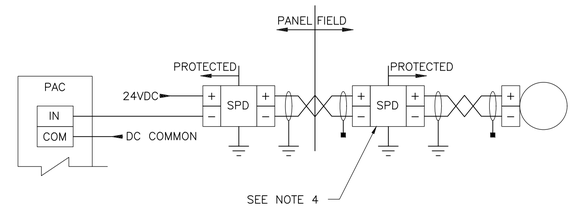

TYPICAL TRANSMITTER LOOP (LOOP POWERED: 2 WIRE)

DETAIL G
NTS

NOTES:

1. TERMINATE SPD DIRECTLY TO GROUND BUS. DO NOT DAISY CHAIN.
2. TERMINATE SHIELD/ DRAIN WIRE DIRECTLY TO SHIELD BUS/ GROUND. DO NOT DAISY CHAIN.
3. TAPE BACK SHIELD/ DRAIN WIRE WHERE INDICATED.
4. WHERE SPD ARE REQUIRED IN THE FIELD, INSTALL SURGE PROTECTION AS CLOSE TO FIELD DEVICE AS POSSIBLE. REFER TO SPECIFICATION 406717.

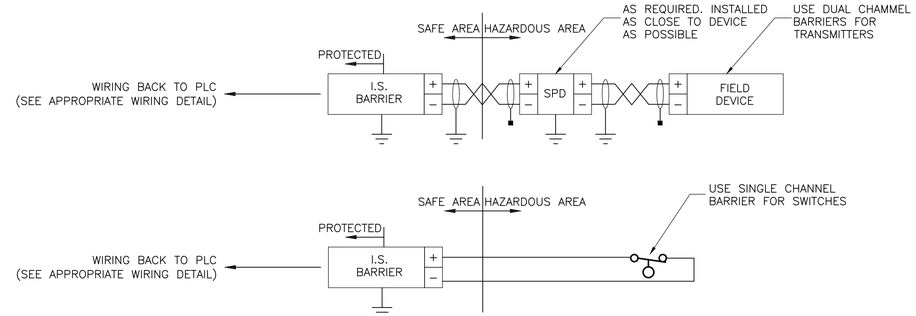

TYPICAL INTRINSICALLY SAFE CIRCUIT

DETAIL H
NTS

NOTES:

1. INSTALL INTRINSICALLY SAFE BARRIER IN METALLIC BOX OUTSIDE THE HAZARDOUS AREA ENVELOPE OR WHERE OTHERWISE IN ELECTRICAL DRAWINGS.
2. SEAL ALL CONDUIT ENTRIES FROM FIELD DEVICE TO THE SAFE AREA BOX. REFER TO ELECTRICAL SPECIFICATION FOR ADDITIONAL REQUIREMENTS.
3. ROUTE INTRINSICALLY SAFE WIRES FROM BARRIER TO DEVICE IN A DEDICATED COLOR CODED CONDUIT. COLOR SHALL BE "INTRINSIC BLUE". REFER TO ELECTRICAL SPECIFICATION FOR ADDITIONAL REQUIREMENTS.
4. CONTRACTOR TO ENSURE THAT THE INTRINSIC SAFE SYSTEM (i.e. SPD, WIRES AND DEVICE DO NOT EXCEED THE BARRIER LIMITATIONS.
5. FOR CLASS 1, DIVISION 1 APPLICATIONS, ONLY "IA" CLASSIFIED INTRINSIC BARRIERS ARE PERMITTED. FOR ALL OTHER AREAS, PROVIDE "IB" CLASSIFIED DEVICES AS A MINIMUM.

A. Paithankar
STATE OF TEXAS
ANJALI PAITHANKAR
121554
LICENSED
PROFESSIONAL ENGINEER
12/09/2023

REV. NO.	DATE	DRWN	CHKD	REMARKS

DESIGNED BY: K.KHALDI
DRAWN BY: K.KHALDI
SHEET CHK'D BY: A.PAITHANKAR
CROSS CHK'D BY: Y.ZHONG
APPROVED BY: A.PAITHANKAR
DATE: DECEMBER 2023

CDM Smith
8310-1 N Capital of Texas Hwy, Suite 250
Austin, TX 78731
Tel: (512) 346-1100
TBPELS Firm Registration No. F-3043

CITY OF GEORGETOWN, TEXAS

CEDAR BREAKS AND D B WOOD LIFT STATIONS

INSTRUMENTATION INSTALLATION DETAILS II

PROJECT NO. 2048-272644
FILE NAME: IZ-2
SHEET NO.
IZ-2

XREFs: [CDMS_2234, J.Hoire- review stamp] Images: []
Last saved by: KHALDIK, Time: 9/2/2023 3:55:14 PM.
pw:\\cdmsmith-azc02-pw.bentley.com:PW_EXT\124899\270868\04 Design Services LS NM_90%\10 Instrumentation\10 CADD\IZ-1.dwg
©2023 CDM SMITH ALL RIGHTS RESERVED.
REUSE OF DOCUMENTS: THESE DOCUMENTS AND DESIGNS PROVIDED BY PROFESSIONAL SERVICE, INCORPORATED HEREIN, ARE THE PROPERTY OF CDM SMITH.
THIS DOCUMENT IS THE PROPERTY OF CDM SMITH AND ARE NOT TO BE USED, IN WHOLE OR PART, FOR ANY OTHER PROJECT WITHOUT THE WRITTEN AUTHORIZATION OF CDM SMITH.

Plotted: 12/13/2023 9:35:56 AM

NOTES:

1. COORDINATE WITH OWNER AND OTHER TRADES FOR ANTENNA MOUNTING LOCATION AND SUITABILITY.
2. AT A MINIMUM, PROVIDE A 30 FT TOWER, PERFORM A FIELD RADIO PATH STUDY TO DETERMINE THE HEIGHT OF THE ANTENNA FOR CLEAR LINE OF SIGHT.
3. DETAIL SHOWS THE MAJOR COMPONENTS OF THIS RADIO/ANTENNA INSTALLATION. COORDINATE INSTALLATION DETAIL WITH RADIO/ANTENNA INSTALLERS AND MANUFACTURERS.
4. MAY REQUIRE ANTI-CLIMB PROTECTION OR PERIMETER FENCE.
5. MAY REQUIRE PAINTING AND/OR OBSTRUCTION LIGHTS, VERIFY FAA REQUIREMENTS.
6. PROVIDE A SAFETY CLIMBING FACILITY WITH SAFETY CLIMB DEVICE FOR TOWERS OVER 10 FEET HIGH PER TIA-222, REVISION G.

KEY NOTES:

1. LIGHTNING ROD PER NFPA 780
2. YAGI RADIO ANTENNA
3. ANTENNA MOUNTING BRACKETS
4. PROVIDE SUPERFLEX COAXIAL CABLE JUMPER FOR FINAL CONNECTION.
5. ANTENNA CABLE GROUNDING KIT
6. SECURE CABLE TO TOWER WITH CLAMPS, MAXIMUM 3 FEET BETWEEN CLAMPS.
7. DRIP LOOP
8. JUMPER #10 AWG COPPER MINIMUM PER NEC
9. GROUND WIRE: 6 AWG PER NEC ARTICLE 820 WITHOUT LIGHTENING ROD. OTHERWISE, 2 AWG STRANDED (OR 2/0 STRANDED FOR TOWERS OVER 75 FEET) PER NFPA 780 FOR LIGHTENING ROD.
10. IF LIGHTNING ROD IS USED, SUPPLY TOWER GROUND ROD PER NFPA 780 AND NEC. 8 FEET MINIMUM COPPER CLAD.
11. BOND TO ELECTRICAL GROUNDING ELECTRODE SYSYEM WITH #6 AWG MINIMUM PER NEC ARTICLE 820.
12. RADIO ANTENNA HEIGHT [SEE DESIGN NOTE 2]
13. ANTENNA CABLE
14. EXOTHERMIC WELD ON AT LEAST TWO LEGS PER NFPA 780.
15. FOUNDATION DESIGN AS RECOMMENDED BY TOWER MANUFACTURER FOR LOCAL SOIL AND WIND SITE CONDITIONS, AND TIA-222, REVISION G.
16. GRAVEL FOR DRAINAGE
17. PROVIDE A MINIMUM OF 10 FEET BETWEEN OTHER ANTENNAS ON THE SAME TOWER.
18. ANTENNA CABLE MUST BE LISTED FOR INDOOR USE IF LONGER THAN 50 FEET
19. COPPER GROUND BAR
20. SURGE PROTECTOR
21. ANTENNA CABLE FEED THROUGH PANEL
22. ROUTE ANTENNA CABLE TO RADIO/LOCATION IN THE CONTROL PANEL. RF CABLE MUST BE LISTED FOR INDOOR USE IF OVER 50 FEET.

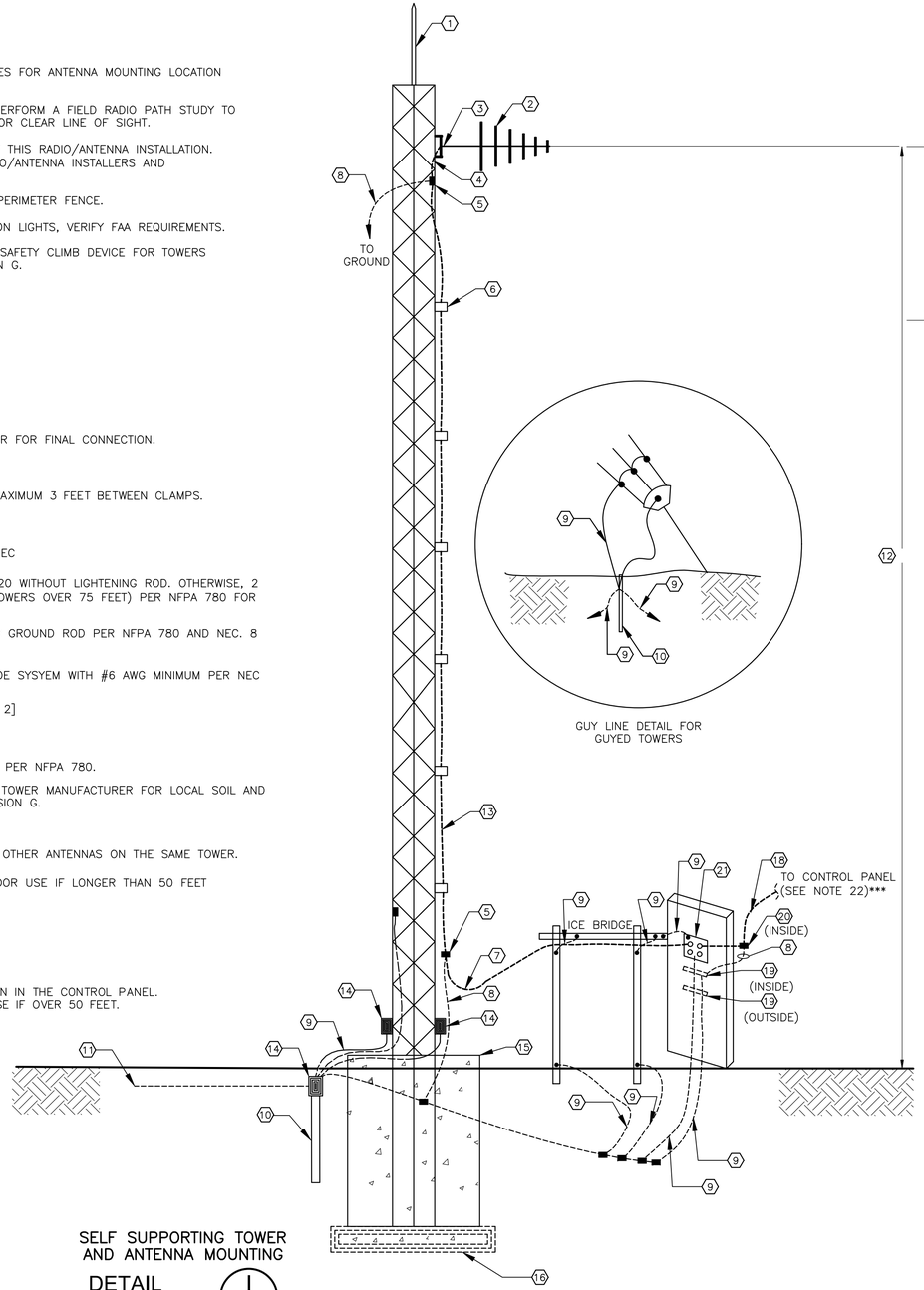

SELF SUPPORTING TOWER AND ANTENNA MOUNTING

DETAIL I

NTS

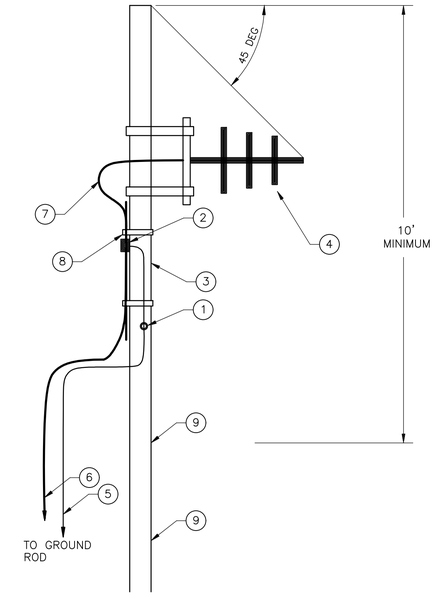

NOTES:

1. GROUND MAST WITH GROUNDING LUG AND CONNECT TO COPPER GROUND ROD OR STRUCTURE GROUND.
2. ANTENNA CABLE GROUNDING KIT. WIRE TO MAST GROUND.
3. ANTENNA MOUNTING MAST, 2" DIA. HOT DIP GALVANIZED.
4. ANTENNA.
5. MANUFACTURER RECOMMENDED COPPER GROUND WIRE.
6. ROUTE ANTENNA CABLE TO RADIO ENCLOSURE. CABLE HOUSING SHALL BE STAINLESS STEEL PIPE AT LEAST 1" IN DIAMETER. PIPE SHALL ENTER THE LCP FROM THE SIDE OF THE PANEL.
7. ANTENNA CABLE.
8. ANTENNA CABLE CLAMPS. HOT DIP GALVANIZED. CLAMP CABLE TO MAST AT 2' INTERVALS.
9. ANTENNA MAST SHALL BE SECURED TO THE STRUCTURE HANDRAILING TO WITHSTAND UP TO 135 MPH WINDS.
10. POLE FOR RADIO ANTENNA MUST BE PROVIDED. A MINIMUM 10 FT POLE MUST BE PROVIDED. FINAL HEIGHT OF ANTENNA TO BE DETERMINED IN ACCORDANCE WITH A RADIO PATH STUDY RECOMMENDATION DURING CONSTRUCTION. ANTENNA MAST SHALL EXTEND ABOVE THE ANTENNA A SUFFICIENT LENGTH TO PROVIDE A 45 DEG ANGLE "CONE" FOR LIGHTNING PROTECTION.

YAGI ANTENNA POLE MOUNT

DETAIL J

NTS

	ITEM	DESCRIPTION	MATERIAL
*	A	1 1/2" PROCESS CONNECTION	MATCH PIPE
*	B	1 1/2" X 3/4" BUSHING	304SS
*	C	3/4" NIPPLE	304SS
*	D	3/4" BALL VALVE	304SS
*	E	3/4" X 1/2" BUSHING	304SS
*	F	1/2" NIPPLE	304SS
*	G	PRESSURE GAUGE (PG)	SEE 407000

* DENOTES NOTE TO CONTRACTOR

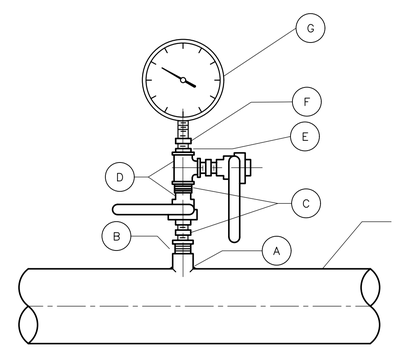

WHERE PROCESS PIPING IS HDPE, PVC OR CPVC, PROVIDE REDUCING TEE FOR THE PROCESS CONNECTION. THE REMAINING INSTRUMENT TREE SHALL REMAIN AS SHOWN.

PRESSURE DEVICE (SINGLE TREE)
STANDARD SERVICE TAP

DETAIL K

NTS

NOTES:

1. PROVIDE PROCESS CONNECTION (ITEM A) ACCORDING TO MECHANICAL DETAILS.
2. COMBINATION BLOCK AND BLEED MANIFOLD MAY BE INSTALLED IN PLACE OF BALL VALVES (ITEM D).
3. PROVIDE PRESSURE DEVICE (ITEM G) WHERE INDICATED ON THE DRAWINGS. REFER TO SPECS FOR GUIDANCE.
4. ROUTE FIELD WIRES FROM DEVICE TO JUNCTION BOX IN FLEXIBLE CONDUIT.

A. Paithankar

STATE OF TEXAS
ANJALI PAITHANKAR
121554
LICENSED
PROFESSIONAL ENGINEER

12/09/2023

REV. NO.	DATE	DRWN	CHKD	REMARKS

DESIGNED BY: K.KHALDI
DRAWN BY: K.KHALDI
SHEET CHK'D BY: A.PAITHANKAR
CROSS CHK'D BY: Y.ZHONG
APPROVED BY: A.PAITHANKAR
DATE: DECEMBER 2023

CDM Smith
8310-1 N Capital of Texas Hwy, Suite 250
Austin, TX 78731
Tel: (512) 346-1100
TBPELS Firm Registration No. F-3043

CITY OF GEORGETOWN, TEXAS

CEDAR BREAKS AND D B WOOD LIFT STATIONS

INSTRUMENTATION INSTALLATION DETAILS III

PROJECT NO. 2048-272644
FILE NAME: IZ-3

SHEET NO.
IZ-3

XREFs: [CDMS_2234, J.Haire- review stamp] Images: []
Last saved by: KHALDK Time: 9/2/2022 3:55:14 PM
pw:\\cdmsmith-pa02-pw.bentley.com:PW_EXT\124899\270866\04 Design Services LS NM_90%\10 Instrumentation\10 CADD\IZ-1.dwg
©2023 CDM SMITH ALL RIGHTS RESERVED
REUSE OF DOCUMENTS: THESE DOCUMENTS AND DESIGNS PROVIDED BY PROFESSIONAL SERVICE, INCORPORATED HEREIN, ARE THE PROPERTY OF CDM SMITH AND ARE NOT TO BE USED, IN WHOLE OR PART, FOR ANY OTHER PROJECT WITHOUT THE WRITTEN AUTHORIZATION OF CDM SMITH.

Plotted: 12/13/2023 9:36:35 AM

Construction Specifications

Cedar Breaks and D B Wood Lift Station
Georgetown, TX

CITY OF GEORGETOWN, TEXAS

CONTRACT DOCUMENTS AND TECHNICAL SPECIFICATIONS

FOR THE CONSTRUCTION OF

Cedar Breaks and D B Wood Lift Stations

PROJECT NO. PRJ000101

DECEMBER 2023

Bid No. 202409

TBPE FIRM REGISTRATION NO. F-3043

9430 Research Blvd., Suite 1-200
Austin, Texas 78759
tel 512-346-1100
fax 512-345-1483

THIS PAGE INTENTIONALLY LEFT BLANK.

CERTIFICATIONS

Division 0	(All Sections)
Division CIP	(All Sections)
Division G	(All Sections)
Division SD	(All Sections)
Division WW	(All Sections)
Division W	(All Sections)
Division 1	(All Sections)
Division 2	(All Sections)
Division 9	Section 099679
Division 31	(All Sections)
Division 32	(All Sections)
Division 33	(All Sections)
Division 40	(Sections 400506 thru 400578.29)
Division 43	(Section 432513.11)

STATE OF TEXAS
GERALD S. FURRIER
129811
LICENSED
PROFESSIONAL ENGINEER
12/11/2023

Division 3	(All Sections)
Division 5	(All Sections)
Division 7	Section 071113
Division 8	Section 083483
Division 9	Section 099676.13

STATE OF TEXAS
MAHNAZ MOSTAFAZADEH
141841
LICENSED
PROFESSIONAL ENGINEER
12/11/2023

Division 26	(All Sections)
Division 43	(400593.23)

STATE OF TEXAS
JOYSON VARGHESE
134792
LICENSED
PROFESSIONAL ENGINEER
12/9/23

Division 40 (Sections 406100 thru 407000)

A. Paithankar

STATE OF TEXAS
ANJALI PAITHANKAR
121554
LICENSED
PROFESSIONAL ENGINEER

12/09/2023

©2023 CDM Smith
All Rights Reserved

CITY OF GEORGETOWN, TEXAS
Cedar Breaks and D B Wood Lift Stations

TABLE OF CONTENTS

Division	Section	Title
DIVISION 0 - BIDDING AND CONTRACT REQUIREMENTS		
	00020	Invitation to Bid
	00100	Instructions to Bidders
	00300	Bid Form
	00400	Statement of Bidders Experience
	00410	Bid Bond
	00500	Standard Form of Agreement
	00510	Notice of Award
	00550	Notice to Proceed
	00610	Texas Statutory Performance Bond
	00620	Texas Statutory Payment Bond
	00650	Certificate of Insurance
	00680	Form 1295
	00700	General Conditions
	00800	Supplementary Conditions
	00800hh	Wage Rates – Heavy Construction
	00941	Change Order Form and Instructions
CIP	**CAPITAL IMPROVEMENT PROJECT REQUIREMENTS**	
	CIP1	Definition of Terms
	CIP2	Abbreviations
	CIP3	Summary of Work
	CIP4	Site Conditions
	CIP4.1	Boring Logs
	CIP6	Control of Work
	CIP7	Control of Materials
	CIP8	Legal Relations and Responsibilities to the Public
	CIP9	Environmental Protection Procedures
	CIP11	Trench Safety Requirements
	CIP13	Summary of Testing (Miscellaneous)
	CIP14	Project Closeout
	CIP15	Project Identification Signage
	CIP16	Warranty
	CIP17	Inspection of Projects

©2023 CDM Smith
All Rights Reserved

CITY OF GEORGETOWN, TEXAS
Cedar Breaks and D B Wood Lift Stations

TABLE OF CONTENTS

Division	Section	Title
G	**GENERAL SPECIFICATIONS**	
	G1	Barricades, Signs and Traffic Handling
	G2	Site Preparation
	G3	Site Clearing
	G4	Pipe Excavation, Trenching, Embedment, Encasement and Backfilling
	G5	Granular Fill Materials
	G6	Sedimentation and Temporary Erosion Control
	G7	Loaming, Hydroseeding and Permanent Erosion Control
	G8	Miscellaneous Work and Cleanup
	G9	Structural Excavation
SD	**STREET AND DRAINAGE SPECIFICATIONS**	
	SD2	Roadway Excavation
	SD3	Embankment and Subgrade
	SD4	Flexible Base
	SD5	Striping
	SD6	Storm Sewer Manholes
WW	**WASTEWATER SPECIFICATIONS**	
	WW1	Precast Manholes
	WW2	Polyvinyl Chloride (PVC) Pipe-Wastewater
	WW3	Connections to and Work on the Existing Wastewater System
W	**WATER SPECIFICATIONS**	
	W1	Ductile Iron Pipe and Fittings
	W2	Polyvinyl Chloride (PVC) Pipe-Water
	W3	Valves, Hydrants and Appurtenances
	W4	Encasement Pipe

©2023 CDM Smith
All Rights Reserved

CITY OF GEORGETOWN, TEXAS
Cedar Breaks and D B Wood Lift Stations

TABLE OF CONTENTS

Division	Section	Title
DIVISION 1 - GENERAL REQUIREMENTS		
	011100	Summary of Work
	011716	Existing Utilities
	012200	Measurement and Payment
	012500	Substation Procedures
	012900	Payment Procedures
	013100	Project Management and Coordination
	013233	Photographic Documentation
	013300	Submittal Procedures
	014000	Quality Requirements
	014200	References
	015000	Temporary Facilities and Controls
	015639	Temporary Tree and Plant Protection
	016000	Product Requirements
	017300	Execution
	017419	Construction Waste Management and Disposal
	017419.07	Form CWM-7: Construction Waste Reduction Progress Report
	017700	Closeout Procedures
	017823	Operation and Maintenance Data
	017900	Demonstration and Training
	018819	Tightness Testing Performance Requirements
	019113	General Commissioning Requirements
DIVISION 2 – SITE WORK		
	025731	Karst Void Mitigation
DIVISION 3 – CONCRETE		
	031000	Concrete Forming and Accessories
	031500	Concrete Joints and Accessories
	032000	Concrete Reinforcing
	033000	Cast-in-Place Concrete
	033500	Concrete Finishing
	033900	Concrete Curing
	036000	Grouting

CITY OF GEORGETOWN, TEXAS
Cedar Breaks and D B Wood Lift Stations

TABLE OF CONTENTS

Division	Section	Title
DIVISION 5 – METALS		
	050519	Post Installed Anchors and Reinforcing Bars
	055000	Metal Fabrications
DIVISION 7 – THERMAL AND MOISTURE PROTECTION		
	071113	Bituminous Dampproofing
DIVISION 8 – OPENINGS		
	083483	Floor Doors
DIVISION 9 – FINISHES		
	099676.13	Wastewater Collection System Coatings
	099679	Atomospheric Protection and Plant Service Areas Coatings
DIVISION 26 – ELECTRICAL		
	260010	Supplemental Requirements for Electrical CLS
	260519	Low-Voltage Electrical Power Conductors and Cables
	260523	Control-Voltage Electrical Power Conductors and Cables
	260526	Grounding and Bonding for Electrical Systems
	260533	Raceways and Boxes for Electrical Systems
	260543	Underground Ducts and Raceways for Electrical Systems
	260544	Sleeves and Sleeve Seals for Electrical Raceways and Cabling
	260573	Power Systems Studies
	262416	Panelboards
	262419	Motor-Control Centers
	262726	Wiring Devices
	262813	Fuses
	262913.06	Soft-Start Motor Controllers
	263213.13	Diesel Emergency Engine Generators
	263600	Transfer Switches
	265619	LED Exterior Lighting
	266100	Electrical Power House

©2023 CDM Smith
All Rights Reserved

CITY OF GEORGETOWN, TEXAS
Cedar Breaks and D B Wood Lift Stations

TABLE OF CONTENTS

Division	Section	Title
DIVISION 31 – EARTHWORK		
	310515	Soils and Aggregates for Earthwork
	310519.13	Geotextiles for Earthwork
	312000	Earthwork
	312316	Rock Removal
	312319	Dewatering
	312323.33	Flowable Fill
	315000	Excavation Support and Protection
DIVISION 32 – EXTERIOR IMPROVEMENTS		
	321313	Concrete Paving
	321373	Concrete Paving Joint Sealants
	323113	Access Gates and Chain Link Fencing
DIVISION 33 – UTILITIES		
	330509.33	Thrust Restraint for Utility Piping
	330526	Utility Identification
	333400	Sanitary Utility Sewerage Force Mains
DIVISION 40 – PROCESS INTERCONNECTIONS		
	400506	Couplings, Adapters, and Specials for Process Piping
	400507	Hangers and Supports for Process Piping
	400519	Ductile Iron Process Pipe
	400551	Common Requirements for Process Valves and Piping
	400559.23	Stainless Steel Slide Gates
	400561	Gate Valves
	400562	Plug Valves
	400565.23	Swing Check Valves
	400567.39	Pressure-Relief Valves
	400578.29	Combination Air Valves for Wastewater Service
	400593.23	Low-Voltage Motor Requirements for Process Equipment
	406100	Process Control and Enterprise Management Systems General Provisions
	406121.20	Process Control System Testing
	406126	Process Control System Training
	406196	Process Control Descriptions

CITY OF GEORGETOWN, TEXAS
Cedar Breaks and D B Wood Lift Stations

TABLE OF CONTENTS

Division	Section	Title
	406343	Programmable Logic Controllers
	406613	Switches and Routers
	406650	Radio Telemetry Equipment
	406663	Antennas
	406666	Monopoles and Towers
	406717	Industrial Enclosures
	406733	Panel Wiring
	406763	Control Panel Mounted UPS
	406863	Configuration of HMI Software
	406866	Configuration of Controller Software
	407000	Instrumentation for Process Systems

DIVISION 43 – PROCESS GAS AND LIQUID HANDLING, PURIFICATION AND STORAGE EQUIPMENT

	432513.11	Wet-Pit Submersible Solids Handling Pumps

APPENDIX A Bypass Pumps Xylem Quote

ADDENDA

SECTION 00020
INVITATION TO BID

Sealed bids may be electronically submitted through the City E-bid system accessible via City's web site at https://gtowntx.ionwave.net/CurrentSourcingEvents.aspx.

Sealed bids will be received by the **City of Georgetown** in the **Georgetown Municipal Court, Purchasing Department, at 510 W. 9th Street, Georgetown, Texas 78626** on **January 18, 2024 at 2:00 p.m. CST** and immediately thereafter publicly opened and read, for constructing the following project:

Cedar Breaks and D B Wood Lift Stations
Project No. PRJ000101
Bid No. 202409

The project consists of furnishing, installing and providing all labor and materials required for the construction of the Cedar Breaks and D B Wood Lift Stations and related pumps, pipelines, and appurtenances as more fully described in the drawings and the summary of work contained in Section CIP3.

Bids must be submitted on the complete project. Bids submitted in hard copy must be enclosed in a sealed envelope, addressed to City of Georgetown, **ATTN: Senior Buyer, 510 W. 9th Street, Georgetown, Texas 78626** and the outside of the envelope must be marked **Cedar Breaks and D B Wood Lift Stations**. The name and address of the bidder and addendum acknowledgement must be plainly marked on the outside of the envelope. All bids must be made on blank forms provided.

Digital copies of the Bidding Documents are available at no charge upon request to the Engineer, CDM Smith, 8310-1 N. Capital of Texas Hwy, Suite 250, Austin, Texas 78731, telephone: (512) 346-1100 (Judy MacLeod). If paper copies of the Bidding Documents are needed, CDM Smith can email the Bidding Documents to Bidder's preferred Printing Company at Bidder's expense. Bidders must register on the City of Georgetown's bid web site – https://purchasing.georgetown.org/bid-information/. The date, time and place for the pre-bid conference are specified below and in Section 00100, Instructions to Bidders.

Each bid must be accompanied by cash or a certified cashier's check, drawn on a bank or trust company authorized to do business in the State of Texas, payable to the City of Georgetown in an amount at least equal to five percent (5%) of the total amount of the bid, as a guarantee that a contract will be entered into. In lieu of cash or a certified check, the Bidder may submit a bid bond in the form prescribed in the Instructions to Bidders. Bids not accompanied by cashier's check or bid bond will not be considered.

Performance and Payment Bonds shall be executed on forms furnished by OWNER. Each bond shall be issued in an amount of one hundred percent (100%) of the Contract Amount by a solvent surety or insurance company licensed to do business in the State of Texas and as specifically prescribed in the General Conditions and Supplementary Conditions.

Minimum insurance requirements are specified in the General Conditions and Supplementary Conditions. The successful Bidder and its subcontractors shall pay to laborers, workmen, and mechanics the prevailing wage rates as required by the Supplementary Conditions.

The right is reserved to reject any or all bids, to waive minor technicalities, and to award a contract or contracts which, in the opinion of the Owner, appear to be in its best interest. A minor technicality is one that does not affect the competitiveness of the Bid. The Owner reserves the right to hold any or all proposals for

the period of time from the opening of bids as specified in Section 00300, Bid Form.

Effective January 1, 2016, Texas Government Code Section 2252.908 requires persons who enter into contract with a government entity to submit a disclosure of interested parties (Form 1295) to the governmental entity or state agency at the time the business entity submits the signed contract to the governmental entity or state agency. The law applies only to a contract of a governmental entity or state agency that either (1) requires an action or vote by the governing body of the entity or agency before the contract may be signed or (2) has a value of at least $1 million.

Use the following link to access filing instructions:
https://www.ethics.state.tx.us/whatsnew/elf_info_form1295.htm

Time is of the essence for this contract.

A **non-mandatory pre-bid teleconference** for this project will be held on **December 28, 2023 at 10:00 a.m. CST**. To attend the pre-bid teleconference, use the Microsoft Teams link provided below. The project site which starts near the **intersection of D B Wood Road and Cedar Breaks Road (meet at the existing Cedar Breaks Road Elevated Storage Tank site), Georgetown, TX 78627** routing as shown in the Drawings, will be available for inspection by prospective bidders on the afternoon of the pre-bid teleconference at **1:00 p.m. CST**.

For the pre-bid teleconference and for the bid opening teleconference, use the Microsoft Teams link provided below:

Microsoft Teams meeting

Join on your computer, mobile app or room device

Click here to join the meeting
Meeting ID: 210 013 000 090
Passcode: LapP7f
Download Teams | Join on the web

Or call in (audio only)
+1 857-327-8948,,986225881# United States, Boston
(844) 566-5330,,986225881# United States (Toll-free)
Phone Conference ID: 986 225 881#

Publication Dates:

Williamson County Sun:
December 13, 2023
December 20, 2023

SECTION 00100
INSTRUCTIONS TO BIDDERS

ARTICLE 1: DEFINED TERMS

1.01 Terms used in these Instructions to Bidders will have the meanings indicated in the General Conditions and Supplementary Conditions. Additional terms used in these Instructions to Bidders have the meanings indicated below which are applicable to both the singular and plural thereof:

A. *Bidder*--The individual or entity who submits a Bid directly to OWNER.

B. *Issuing Office*--The office from which the Bidding Documents are to be issued.

C. *Successful Bidder*--The Bidder submitting a responsive Bid to whom OWNER (on the basis of OWNER's evaluation as hereinafter provided) makes an award.

ARTICLE 2: COPIES OF BIDDING DOCUMENTS

2.01 Complete sets of the Bidding Documents in the number and for the non-refundable deposit sum, if any, stated in the Advertisement or Invitation to Bid may be obtained from the Issuing Office.

2.02 Complete sets of Bidding Documents must be used in preparing Bids; neither OWNER nor ENGINEER assumes any responsibility for errors or misinterpretations resulting from the use of incomplete sets of Bidding Documents.

2.03 OWNER and ENGINEER in making copies of Bidding Documents available on the above terms do so only for the purpose of obtaining Bids for the Work and do not confer a license or grant for any other use.

ARTICLE 3: QUALIFICATIONS OF BIDDERS

3.01 To demonstrate Bidder's qualifications to perform the Work, Bidder shall submit written evidence such as financial data, previous experience, present commitments, and such other data as may be called for below.

A. <u>Section 00400 Statement of Bidder's Experience, including Attachments A – I.</u>

ARTICLE 4: EXAMINATION OF BIDDING DOCUMENTS, OTHER RELATED DATA, AND SITE

4.01 *Subsurface and Physical Conditions*

A. The Supplementary Conditions identify:

1. Those reports of explorations and tests of subsurface conditions at or contiguous to the Site that Engineer has used in preparing the Bidding Documents.

2. Those drawings of physical conditions in or relating to existing surface and subsurface structures at or contiguous to the Site (except Underground Facilities) that ENGINEER has used in preparing the Bidding Documents.

B. Copies of reports and drawings referenced in paragraph 4.01.A will be made available by ENGINEER to any Bidder on request. Those reports and drawings are not part of the Contract Documents, but the "technical data" contained therein upon which Bidder is entitled to rely as provided in paragraph 4.02 of the General Conditions and established in paragraph 4.02 of the Supplementary Conditions. Bidder is responsible for any interpretation or conclusion Bidder draws from any "technical data" or any other data, interpretations, opinions or information contained in such reports or shown or indicated in such drawings.

4.02 *Underground Facilities*

A. Information and data shown or indicated in the Bidding Documents with respect to existing Underground Facilities at or contiguous to the Site is based upon information and data furnished to OWNER and ENGINEER by owners of such Underground Facilities, including OWNER, or others.

4.03 *Hazardous Environmental Condition*

A. The Supplementary Conditions identify those reports and drawings relating to a Hazardous Environmental Condition identified at the Site, if any, that ENGINEER has used in preparing the Bidding Documents.

B. Copies of reports and drawings referenced in paragraph 4.03.A will be made available by OWNER to any Bidder on request. Those reports and drawings are not part of the Contract Documents, but the "technical data" contained therein upon which Bidder is entitled to rely as provided in paragraph 4.06 of the General Conditions has been identified and established in paragraph 4.06 of the Supplementary Conditions. Bidder is responsible for any interpretation or conclusion Bidder draws from any "technical data" or any other data, interpretations, opinions, or information contained in such reports or shown or indicated in such drawings.

4.04 Provisions concerning responsibilities for the adequacy of data furnished to prospective Bidders with respect to subsurface conditions, other physical conditions and Underground Facilities, and possible changes in the Bidding Documents due to differing or unanticipated conditions appear in paragraphs 4.02, 4.03, and 4.04 of the General Conditions. Provisions concerning responsibilities for the adequacy of data furnished to prospective Bidders with respect to a Hazardous Environmental Condition at the Site, if any, and possible changes in the Contract Documents due to any Hazardous Environmental Condition uncovered or revealed at the Site which was not shown or indicated in the Drawings or Specifications or identified in the Contract Documents to be within the scope of the Work appear in paragraph 4.06 of the General Conditions.

4.05 On request, OWNER will provide Bidder access to the Site to conduct such examinations, investigations, explorations, tests, and studies as Bidder deems necessary for submission of a Bid.

Bidder shall fill all holes and clean up and restore the Site to its former condition upon completion of such explorations, investigations, tests, and studies.

4.06 DELETED

4.07 In submitting this Bid, the Bidder represents that:

A. Bidder has examined and carefully studied the Bidding Documents, including any Addenda and the other related data identified in the Bidding Documents;

B. Bidder has visited the Site and become familiar with and is satisfied as to the general, local, and Site conditions that may affect cost, progress, and performance of the Work;

C. Bidder is familiar with and is satisfied as to all federal, state, and local laws and regulations that may affect cost, progress, or performance of the Work;

D. Bidder has carefully studied (1) all reports of explorations and tests of subsurface conditions at or contiguous to the Site and all drawings of physical conditions in or relating to existing surface or subsurface structures at or contiguous to the Site (except Underground Facilities) which have been identified in the Supplementary Conditions as provided in paragraph 4.02 of the General Conditions, and (2) all reports and drawings of a Hazardous Environmental Condition, if any, at the Site which have been identified in the Supplementary Conditions as provided in paragraph 4.06 of the General Conditions;

E. Bidder has obtained and carefully studied (or accepts the consequences and responsibility for not doing so) all additional or supplementary examinations, investigations, explorations, tests, studies, and data concerning conditions (surface, subsurface, and Underground Facilities) at or contiguous to the Site which may affect cost, progress, or performance of the Work or which relate to any aspect of the means, methods, techniques, sequences, and procedures of construction to be employed by Bidder, including any specific means, methods, techniques, sequences, and procedures of construction expressly required by the Bidding Documents to be employed by Bidder, and safety precautions and programs incident thereto;

F. Bidder does not consider that any further examinations, investigations, explorations, tests, studies, or data are necessary for the determination of its Bid for performance of the Work at the price(s) bid and within the times and in accordance with the other terms and conditions of the Bidding Documents;

G. Bidder is aware of the general nature of the work to be performed by OWNER and others at the Site that relates to the Work as indicated in the Bidding Documents;

H. Bidder has correlated the information known to Bidder, information and observations obtained from visits to the Site, reports and drawings identified in the Bidding Documents, and all additional examinations, investigations, explorations, tests, studies, and data with the Bidding Documents;

I. Bidder has promptly given ENGINEER written notice of all conflicts, errors, ambiguities, or discrepancies that Bidder discovers in the Bidding Documents and confirmed that the written resolution thereof by ENGINEER is acceptable to Bidder; and

J. The Bidding Documents are generally sufficient to indicate and convey understanding of all terms and conditions for the performance of the Work for which this Bid is submitted.

4.08 The submission of a Bid will constitute an incontrovertible representation by Bidder that Bidder has complied with every requirement of this Article 4, that without exception the Bid is premised upon performing and furnishing the Work required by the Bidding Documents and applying any specific means, methods, techniques, sequences, and procedures of construction that may be shown or indicated or expressly required by the Bidding Documents, that Bidder has given ENGINEER written notice of all conflicts, errors, ambiguities, and discrepancies that Bidder has discovered in the Bidding Documents and the written resolutions thereof by ENGINEER are acceptable to Bidder, and that the Bidding Documents are generally sufficient to indicate and convey understanding of all terms and conditions for performing and furnishing the Work.

ARTICLE 5: PRE-BID CONFERENCE

5.01 A **non-mandatory pre-bid teleconference** will be held at **10:00 a.m. CST on December 28, 2023**. To attend the pre-bid, use the Microsoft Teams link provided below:

Microsoft Teams meeting
Click here to join the meeting
Meeting ID: 210 013 000 090
Passcode: LapP7f
Download Teams | Join on the web

Or call in (audio only)
+1 857-327-8948,,986225881# United States, Boston
(844) 566-5330,,986225881# United States (Toll-free)
Phone Conference ID: 986 225 881#

Representatives of OWNER and ENGINEER will be present to discuss the Project. Bidders are encouraged to attend and participate in the conference. ENGINEER will transmit to all prospective Bidders of record such Addenda as ENGINEER considers necessary in response to questions arising at the conference. Oral statements may not be relied upon and will not be binding or legally effective.

The project site which starts near **intersection of D B Wood Road and Cedar Breaks Road (meet at the existing Cedar Breaks Road Elevated Storage Tank site), Georgetown, TX 78627** routing as shown in the Drawings, will be available for inspection by prospective bidders on the afternoon of the pre-bid conference at **1:00 p.m. CST**.

ARTICLE 6: SITE AND OTHER AREAS

6.01 The Site is identified in the Bidding Documents. All additional lands and access thereto required for temporary construction facilities, construction equipment, or storage of materials and equipment to be incorporated in the Work are to be obtained and paid for by CONTRACTOR. Easements for permanent structures or permanent changes in existing facilities are to be obtained and paid for by OWNER unless otherwise provided in the Bidding Documents.

ARTICLE 7: INTERPRETATIONS AND ADDENDA

7.01 All questions about the meaning or intent of the Bidding Documents are to be submitted to ENGINEER in writing. Interpretations or clarifications considered necessary by ENGINEER in response to such questions will be issued by Addenda mailed or delivered to all parties recorded by ENGINEER as having received the Bidding Documents. Questions received less than ten days prior to the date for opening of Bids may not be answered. Only questions answered by Addenda will be binding. Oral and other interpretations or clarifications will be without legal effect.

7.02 Addenda may be issued to clarify, correct, or change the Bidding Documents as deemed advisable by OWNER or ENGINEER.

ARTICLE 8: BID SECURITY

8.01 A Bid must be accompanied by Bid security made payable to OWNER in an amount of five percent (5%) of Bidder's maximum Bid price and in the form of a certified or bank check or a Bid Bond [on the form attached] issued by a surety meeting the requirements of paragraphs 5.01 and 5.02 of the General Conditions.

8.02 If the Successful Bidder fails to execute and deliver the Contract Documents and furnish the required contract security within 15 days after the Notice of Award, OWNER may annul the Notice of Award and the Bid security of that Bidder will be forfeited.

8.03 Bid security of Unsuccessful Bidders will be returned upon written request by the Bidder. The bid security will be returned within fourteen days of bid opening to a Bidder who submits a certified or bank check unless OWNER believes Bidder has a reasonable chance of receiving the award. The bid security may be retained by the OWNER until the award of the Agreement by City Council.

ARTICLE 9: CONTRACT TIMES

9.01 The number of days within which, or the dates by which, the Work is to be (a) Substantially Completed and (b) also completed and ready for final payment are set forth in Section 00500, Standard Form of Agreement.

ARTICLE 10: LIQUIDATED DAMAGES

10.01 Provisions for liquidated damages, if any, are set forth in Section 00500, Standard Form of Agreement, Article 4.03.

ARTICLE 11: SUBSTITUTE AND "OR-EQUAL" ITEMS

11.01 The Contract, if awarded, will be on the basis of materials and equipment specified or described in the Bidding Documents without consideration of possible substitute or "or-equal" items. Whenever it is specified or described in the Bidding Documents that a substitute or "or-equal" item of material or equipment may be furnished or used by CONTRACTOR if acceptable to ENGINEER, application for such acceptance will not be considered by ENGINEER until after the Effective Date of the Agreement. The procedure for submission of any such application by CONTRACTOR and consideration by ENGINEER is set forth in the General Conditions and may be supplemented in the General Requirements.

ARTICLE 12: SUBCONTRACTORS, SUPPLIERS, AND OTHERS

12.01 Bidder shall identify the major Subcontractors Bidder proposes for this Project in Section 00400 Statement of Bidder's Experience. Such list shall be accompanied by an experience statement with pertinent information regarding similar projects and other evidence of qualification for each such Subcontractor, Supplier, individual, or entity as provided on Attachment E of Statement of Bidder's Experience. If OWNER or ENGINEER, after due investigation, has reasonable objection to any proposed Subcontractor, Supplier, individual, or entity, OWNER may, before the Notice of Award is given, request apparent Successful Bidder to submit a substitute, in which case apparent Successful Bidder shall submit an acceptable substitute.

12.02 If apparent Successful Bidder declines to make any such substitution, OWNER may award the Contract to another Bidder that proposes to use acceptable Subcontractors, Suppliers, individuals, or entities. Declining to make requested substitutions will not constitute grounds for forfeiture of the Bid security of any Bidder. Any Subcontractor, Supplier, individual, or entity so listed and against which OWNER or ENGINEER makes no written objection prior to the giving of the Notice of Award will be deemed acceptable to OWNER and ENGINEER subject to revocation of such acceptance after the Effective Date of the Agreement as provided in paragraph 6.06 of the General Conditions.

12.03 CONTRACTOR shall not be required to employ any Subcontractor, Supplier, individual, or entity against whom CONTRACTOR has reasonable objection.

ARTICLE 13: PREPARATION OF BID

13.01 The Bid form is included with the Bidding Documents. Additional copies may be obtained from ENGINEER.

13.02 All blanks on the Bid form shall be completed by printing in ink or by typewriter and the Bid signed. A Bid price shall be indicated for each [Bid item] listed therein, or the words "No Bid," "No Change," or "Not Applicable" entered.

13.03 A Bid by a corporation shall be executed in the corporate name by the president or a vice-president or other corporate officer accompanied by evidence of authority to sign. The corporate seal shall be affixed and attested by the secretary or an assistant secretary. The corporate address and state of incorporation shall be shown below the signature.

13.04 A Bid by a partnership shall be executed in the partnership name and signed by a partner (whose title must appear under the signature), accompanied by evidence of authority to sign. The official address of the partnership shall be shown below the signature.

13.05 A Bid by a limited liability company shall be executed in the name of the firm by a member and accompanied by evidence of authority to sign. The state of formation of the firm and the official address of the firm must be shown below the signature.

13.06 A Bid by an individual shall show the Bidder's name and official address.

13.07 A Bid by a joint venture shall be executed by each joint venturer in the manner indicated on the Bid form. The official address of the joint venture must be shown below the signature.

13.08 All names shall be typed or printed in ink below the signatures.

13.09 The Bid shall contain an acknowledgment of receipt of all Addenda, the numbers of which shall be filled in on the Bid form.

13.10 The address, telephone number, and email address for communications regarding the Bid shall be shown.

13.11 The Bid shall contain evidence of Bidder's authority and qualification to do business in Texas or covenant to obtain such qualification prior to award of the Contract. Bidder's Texas state contractor license number for, if any, shall also be shown on the Bid form.

ARTICLE 14: BASIS OF BID; EVALUATION OF BIDS

14.01 *Unit Price*

A. Bidders shall submit a Bid on a unit price basis for each item of Work listed in the Bid schedule.

B. The total of all estimated prices will be determined as the sum of the products of the estimated quantity of each item and the unit price Bid for the item. The final quantities and Contract Price will be determined in accordance with paragraph 11.03 of the General Conditions.

C. Discrepancies between the multiplication of units of Work and unit prices will be resolved in favor of the unit prices. Discrepancies between the indicated sum of any column of

figures and the correct sum thereof will be resolved in favor of the correct sum. Discrepancies between words and figures will be resolved in favor of the words.

14.02 The Bid price shall include such amounts as the Bidder deems proper for overhead and profit on account of cash allowances, if any, named in the Contract Documents as provided in paragraph 11.03 of the General Conditions.

14.03 As provided by Texas Local Government Code § 252.043(d), the Contract shall be awarded to the lowest responsible Bidder.

ARTICLE 15: SUBMITTAL OF BID

15.01 If submitted by hard copy, each prospective Bidder is furnished one separate unbound copy each of the Bid form, and, if required, the Bid Bond form. The unbound copy of the Bid form shall be completed and **one original and one copy** shall be submitted with the Bid security and the following data:

A. Section 00400 Statement of Bidder's Experience, including Attachments A – I

1. It would be preferred that this information be included with the bid. The proposed names must be filled in on the applicable sheets for Section 00400 and provided with the bid. If desired, the experience descriptions may be provided no later than 2:00 pm CST on January 12, 2024 at the Purchasing Office with the Bidder's name and Project name included on the envelope as described in Paragraph 15.02.

15.02 A Bid shall be submitted no later than the date and time prescribed and at the place indicated in the advertisement or Invitation to Bid and shall be enclosed in an opaque sealed envelope plainly marked with the Project title (and, if applicable, the designated portion of the Project for which the Bid is submitted), the Bid Number, the name and address of Bidder, and shall be accompanied by the Bid security and other required documents. If a Bid is sent by mail or other delivery system, the sealed envelope containing the Bid shall be enclosed in a separate envelope plainly marked on the outside with the notation "BID ENCLOSED." A mailed or hand delivered Bid shall be addressed to:

City of Georgetown
Purchasing Department
ATTN: Senior Buyer
510 W. 9th Street
Georgetown, Texas 78626

ARTICLE 16: MODIFICATION AND WITHDRAWAL OF BID

16.01 A Bid may be modified or withdrawn by an appropriate document duly executed in the manner that a Bid must be executed and delivered to the place where Bids are to be submitted prior to the date and time for the opening of Bids.

16.02 If within 24 hours after Bids are opened any Bidder files a duly signed written notice with OWNER and promptly thereafter demonstrates to the reasonable satisfaction of OWNER that there was a material and substantial mistake in the preparation of its Bid, that Bidder may withdraw its Bid, and the Bid security will be returned. Thereafter, if the Work is rebid, that Bidder will be disqualified from further bidding on the Work.

ARTICLE 17: OPENING OF BIDS

17.01 Bids will be opened at the time and place indicated in the advertisement or Invitation to Bid and, unless obviously non-responsive, read aloud publicly. An abstract of the amounts of the base Bids and major alternates, if any, will be made available to Bidders after the opening of Bids.

ARTICLE 18: BIDS TO REMAIN SUBJECT TO ACCEPTANCE

18.01 All Bids will remain subject to acceptance for the period of time stated in the Bid Form, but OWNER may, in its sole discretion, release any Bid and return the Bid security prior to the end of this period.

ARTICLE 19: AWARD OF CONTRACT

19.01 As permitted by the Texas Local Government Code § 252.043, OWNER reserves the right to reject any or all Bids, including without limitation, nonconforming, nonresponsive, unbalanced, or conditional Bids. OWNER further reserves the right to reject the Bid of any Bidder whom it finds, after reasonable inquiry and evaluation, to be non-responsible. OWNER may reject the Bid of any Bidder if OWNER believes that it would not be in the best interest of the Project to make an award to that Bidder. OWNER reserves the right to waive minor technicalities and make an award to best serve the interest of the OWNER.

19.02 More than one Bid for the same Work from an individual or entity under the same or different names will not be considered. Reasonable grounds for believing that any Bidder has an interest in more than one Bid for the Work may be cause for disqualification of that Bidder and the rejection of all Bids in which that Bidder has an interest.

19.03 In evaluating Bids, OWNER will consider whether or not the Bids comply with the prescribed requirements, and such alternates, unit prices and other data, as may be requested in the Bid Form or prior to the Notice of Award.

19.04 In evaluating Bidders, OWNER will consider the qualifications of Bidders and may consider the qualifications and experience of Subcontractors, Suppliers, and other individuals or entities proposed for those portions of the Work for which the identity of Subcontractors, Suppliers, and other individuals or entities must be submitted as provided in Section 00400 Statement of Bidder's Experience.

19.05 OWNER may conduct such investigations as OWNER deems necessary to establish the responsibility, qualifications, and financial ability of Bidders, proposed Subcontractors, Suppliers, individuals, or entities to perform the Work in accordance with the Contract Documents.

19.06 If the Contract is to be awarded, OWNER will award the Contract to the lowest responsible Bidder.

19.07 No Contract will be awarded or binding upon OWNER until it has been signed by its Mayor (or by the Mayor Pro Tem or other Council members stated in the City Charter) after having been duly authorized to do so by the City Council of the City of Georgetown.

19.08. Chapter 176 of the Texas Local Government Code requires a person or agent of a person who contracts or seeks to contract for the sale or purchase of property, goods, or services with a local governmental entity to submit a **Conflict of Interest Questionnaire** to the appropriate records administrator of the City not later than the seventh business day after the date the person begins contract discussions or negotiations with the local governmental entity, or submits to the local governmental entity an application, response to a request for proposals or Bids, correspondence, or another writing related to a potential agreement with the local governmental entity. For purposes of this Bid, Bidder may submit the completed form with the Bid. Each Bidder is responsible for verifying it is using the most current form available from www.ethics.state.tx.us. This legislation is subject to change, and each vendor should consult their own attorney regarding the current law. This statement is provided for information purposes only, and submission of a completed Conflict of Interest Questionnaire is not a required element of the Bid.

19.09 Section 2252.908 of the Texas Government Code states that a governmental entity or state agency may not enter into certain contracts with a business entity unless the business entity submits a disclosure of interested parties to the governmental entity or state agency at the time the business entity submits the signed contract to the governmental entity or state agency. The law applies only to a contract of a governmental entity or state agency that either (1) requires an action or vote by the governing body of the entity or agency before the contract may be signed or (2) has a value of at least $1 million.

All contractors entering into a contract that is approved by City Council must complete a Form 1295.

A business entity must enter the required information on Form 1295 online at https://www.ethics.state.tx.us/whatsnew/elf_info_form1295.htm and print a copy of the completed form, which will include a certification of filing that will contain a unique certification number. An authorized agent of the business entity must sign the printed copy of the form and have the form notarized. The completed Form 1295 with the certification of filing must be submitted to the City.

ARTICLE 20: CONTRACT SECURITY AND INSURANCE

20.01 Article 5 of the General Conditions, as may be modified by the Supplementary Conditions, sets forth OWNER'S requirements as to performance and payment Bonds and insurance. When the Successful Bidder delivers the executed Agreement to OWNER, it must be accompanied by such Bonds.

20.02 The CONTRACTOR shall not commence Work until he has furnished certification of all insurance required and such has been approved by the City of Georgetown, nor shall the CONTRACTOR

allow any subcontractor to commence Work until proof of all similar insurance that is required of the Subcontractor has been furnished and approved. The OWNER must be an additional insured on the policies and the policies must provide coverage to OWNER for work under this Contract. A certificate of insurance that contains the following language, or similar language, **WILL NOT BE ACCEPTED** as evidence that OWNER is an additional insured and covered under the policies: "ISSUED AS A MATTER OF INFORMATION ONLY AND CONFERS NO RIGHTS UPON THE CERTIFICATE HOLDER. THIS CERTIFICATE DOES NOT AMEND, EXTEND, OR ALTER THE COVERAGE AFFORDED BY THE POLICIES BELOW." The Certificate of Liability Insurance form included in the Bid Documents must be used by the CONTRACTOR's Insurer, and CONTRACTOR's Insurer must furnish a full and complete copy of the underlying insurance policy to the OWNER upon OWNER's request to establish proof of insurance.

20.03 If the Bidder's insurance company is authorized, pursuant to its agreement with Bidder, to arrange for the replacement of a loss, rather than by making a cash payment directly to the City of Georgetown, the insurance company must furnish or have furnished by Bidder, a performance bond in accordance with Chapter 2253.021(b), Texas Government Code, and a payment bond in accordance with Chapter 2253.021(c), Texas Government Code.

ARTICLE 21: SIGNING OF AGREEMENT

21.01 When OWNER gives a Notice of Award to the Successful Bidder, it shall be accompanied by the required number of unsigned counterparts of the Agreement with the other Contract Documents which are identified in the Agreement as attached thereto. Within 15 days thereafter, Successful Bidder shall sign and deliver the required number of counterparts of the Agreement and attached documents to OWNER. Within ten days thereafter, OWNER shall deliver one fully signed counterpart to Successful Bidder with a complete set of the Drawings with appropriate identification.

ARTICLE 22: SALES AND USE TAXES

22.01 OWNER is exempt from Texas state sales and use taxes on materials and equipment to be incorporated in the Work, pursuant to the provisions of Section 151.309(5) of the Texas Tax Code. Said taxes shall not be included in the Bid. Refer to paragraph 6.10 of the General Conditions for additional information.

ARTICLE 23: RETAINAGE

23.01 Under paragraph 14.02 of the General Conditions, retainage in the amount of five percent (5%) will be withheld pursuant to Texas Government Code § 2253, and such retainage will be withheld until thirty (30) days after Final Completion.

This page intentionally left blank.

SECTION 00300
BID FORM

BIDDER'S NAME: _____

PROJECT IDENTIFICATION:

City of Georgetown
Cedar Breaks and D B Wood Lift Stations

PROJECT NUMBER: PRJ000101
BID NUMBER: 202409

THIS BID IS SUBMITTED TO:

The City of Georgetown, Texas
Georgetown Municipal Court, Purchasing Department
510 W. 9th Street
Georgetown, Texas 78626

1.01 The undersigned Bidder proposes and agrees, if this Bid is accepted, to enter into an Agreement with OWNER in the form included in the Bidding Documents to perform all Work as specified or indicated in the Bidding Documents for the prices and within the times indicated in this Bid and in accordance with the other terms and conditions of the Bidding Documents.

2.02 BIDDER understands and agrees that the OWNER has the right to reject any or all Bids and to waive any minor technicalities.

2.01 Bidder accepts all of the terms and conditions of the Advertisement or Invitation to Bid and Instructions to Bidders, including without limitation those dealing with the disposition of Bid security. The Bid will remain subject to acceptance for 120 days after the Bid opening, or for such longer period of time that Bidder may agree to in writing upon request of OWNER.

3.01 In submitting this Bid, Bidder represents, as set forth in the Agreement, that:

A. Bidder has examined and carefully studied the Bidding Documents, the other related data identified in the Bidding Documents, and the following Addenda, receipt of all which is hereby acknowledged.

Addendum No.	Addendum Date
_____	_____
_____	_____
_____	_____

B. Bidder has visited the Site and become familiar with and is satisfied as to the general, local and Site conditions that may affect cost, progress, and performance of the Work.

C. Bidder is familiar with and is satisfied as to all federal, state and local laws and regulations that may affect cost, progress and performance of the Work.

D. Bidder has carefully studied all: (1) reports of explorations and tests of subsurface conditions at or contiguous to the Site and all drawings of physical conditions in or relating to existing surface or subsurface structures at or contiguous to the Site (except Underground Facilities) which have been identified in the Supplementary Conditions as provided in paragraph 4.02 of the General Conditions, and (2) reports and drawings of a Hazardous Environmental Condition, if any, which has been identified in the Supplementary Conditions as provided in paragraph 4.06 of the General Conditions.

E. Bidder has obtained and carefully studied (or assumes responsibility for having done so) all additional or supplementary examinations, investigations, explorations, tests, studies and data concerning conditions (surface, subsurface and Underground Facilities) at or contiguous to the Site which may affect cost, progress, or performance of the Work or which relate to any aspect of the means, methods, techniques, sequences, and procedures of construction to be employed by Bidder, including applying the specific means, methods, techniques, sequences, and procedures of construction expressly required by the Bidding Documents to be employed by Bidder, and safety precautions and programs incident thereto.

F. Bidder does not consider that any further examinations, investigations, explorations, tests, studies, or data are necessary for the determination of this Bid for performance of the Work at the price(s) bid and within the times and in accordance with the other terms and conditions of the Bidding Documents.

G. Bidder is aware of the general nature of work to be performed by OWNER and others at the Sites that relates to the Work as indicated in the Bidding Documents.

H. Bidder has correlated the information known to Bidder, information and observations obtained from visits to the Sites, reports and drawings identified in the Bidding Documents, and all additional examinations, investigations, explorations, tests, studies, and data with the Bidding Documents.

I. Bidder has given ENGINEER written notice of all conflicts, errors, ambiguities, or discrepancies that Bidder has discovered in the Bidding Documents, and the written resolution thereof by ENGINEER is acceptable to Bidder.

J. The Bidding Documents are generally sufficient to indicate and convey understanding of all terms and conditions for the performance of the Work for which this Bid is submitted.

4.01 Bidder further represents that this Bid is genuine and not made in the interest of or on behalf of any undisclosed individual or entity and is not submitted in conformity with any agreement or rules of any group, association, organization or corporation; Bidder has not directly or indirectly induced or solicited any other Bidder to submit a false or sham Bid; Bidder has not solicited or induced any individual or entity to refrain from bidding; and Bidder has not sought by collusion to obtain for itself any advantage over any other Bidder or over OWNER.

5.01 Bidder will complete the Work in accordance with the Contract Documents for the following price(s):

UNIT PRICE SCHEDULE FOR

CITY OF GEORGETOWN
CEDAR BREAKS AND D B WOOD LIFT STATIONS

ITEM NO.	ESTIMATED QUANTITY	UNIT	ITEM DESCRIPTION & PRICE IN WORDS	UNIT PRICE IN FIGURES	TOTAL ESTIMATED PRICE
1	1	LS	Insurance, Bonds and Mobilization/Demobilization Related Expenses not to exceed 5% of Total Proposal, the sum of _____ _____ _____ dollars and _____cents per unit	$_____	$_____
2	1	LS	Furnish all necessary labor, materials, equipment, and incidentals necessary to construct the **Cedar Breaks Lift Station**, as more fully described in the Drawings and the Summary of Work contained in Section CIP3. This item shall include all work as specified and shown on the Drawings including all ancillary equipment, complete in place including incidental work obviously needed for the complete project, except those costs specifically included in the other items in this Unit Price Schedule, the sum of _____ _____ _____ dollars and _____cents per unit	$_____	$_____
3	1	LS	Furnish all necessary labor, materials, equipment, and incidentals necessary to construct the **D B Wood Lift Station**, as more fully described in the Drawings and the Summary of Work contained in Section CIP3. This item shall include all work as specified and shown on the Drawings including all ancillary equipment, complete in	$_____	$_____

			place including incidental work obviously needed for the complete project, except those costs specifically included in the other items in this Unit Price Schedule, the sum of _____ _____ _____ dollars and _____cents per unit		
4	1	LS	Furnish all deliver two **Portable Trailer-Mounted Diesel Bypass Pumps** (Xylem/godwin CD150S and CD225M Dri-Prime) Pumps including suction hoses and PM service items noted for each pump and accessories as detailed in Appendix A of this Project Manual. This item shall include all items specified in Xylem quotation #115027859 included in Appendix A, the sum of _____ _____ _____ dollars and _____cents per unit	$_____	$_____

ALLOWANCES FOR BASE BID CEDAR BREAKS AND D B WOOD LIFT STATIONS					
ITEM NO.	**ESTIMATED QUANTITY**	**UNIT**	**ITEM DESCRIPTION & PRICE IN WORDS**	**UNIT PRICE IN FIGURES**	**TOTAL ESTIMATED PRICE**
5	1	LS	Allowance for Payments to Pedernales Electric Cooperative (PEC) for Power Transfer to New Cedar Breaks Lift Station, all work fully performed and shall not exceed, **TWO HUNDRED THOUSAND** dollars and **ZERO** cents per unit	$200,000.00	$200,000.00
6	1	LS	Allowance for Payments to City of Georgetown Electric for Power Transfer to New D B Wood Lift Station, all work fully performed and	$200,000.00	$200,000.00

			shall not exceed, **TWO HUNDRED THOUSAND** dollars and **ZERO** cents per unit		
7	1	LS	Owner-held Allowance for Bypass Pumping at Both Lift Station Wetwells and Temporary Discharge Piping to the Force Main Bypass Assemblies, **ONE HUNDRED THOUSAND** dollars and **ZERO** cents per unit	$100,000.00	$100,000.00
8	1	LS	Owner-held Contingency Allowance, **FIVE HUNDRED THOUSAND** dollars and **ZERO** cents per unit	$500,000.00	$500,000.00

TOTAL BASE BID AMOUNT (BASE BID ITEM Nos. 1 - 8)

$_____
(FIGURE)

$_____ dollars and

_____ cents
(WRITTEN)

OWNER will evaluate the Bids based upon the total base bid proposal amount above. The OWNER, at its sole discretion, will award the contract based on the base bid alone.

Unit Prices have been computed in accordance with paragraph 11.03.B of the General Conditions.

Bidder acknowledges that estimated quantities are not guaranteed, are solely for the purpose of comparison of Bids, and final payment for all Unit Price Bid items will be based on actual quantities provided, determined as provided in the Contract Documents.

DEDUCTIVE ALTERNATIVE

After reviewing the Total Base Bid Amount, at the OWNER's discretion, the OWNER may elect the following deductive alternatives as determined by the OWNER to be in their best interest. The additive and/or deductive alternative will be accepted based on availability of funds and will be considered in the selection of the low bidder.

DEDUCTIVE ALTERNATIVE ITEM NO. 1: Furnish and install all necessary labor, materials, equipment and incidentals necessary to provide an alternative Wet-Pit Submersible Solids Handling Pump manufacturer other than the basis of design pump manufacturer WILO USA, of Cedarburg, WI with one of the alternative Wet-Pit Submersible Solids Handling Pump manufacturers listed in Specification Section 432513.11 (Xylem or KSB) including all modifications required to comply with the drawings and as specified and shown on the drawings including all ancillary equipment, complete in place as detailed and specified, except those costs specifically included in the other items in Base Bid Item No. 2 and 3. No other alternative Wet-Pit Submersible Solids Handling Pump manufacturers will be considered. For this item, submit the total deductive price for selection of one of the alternative Wet-Pit Submersible Solids Handling

Pump manufacturers for all six (6) pumps. If the basis of design Wet-Pit Submersible Solids Handling Pump manufacturer WILO USA is selected, leave this section blank.

Alternative Submersible Pump Manufacturer **(circle one):**

Xylem *or* KSB

Lump Sum $_____
(Figures)

_____
(Written)

SCHEDULE OF MATERIALS AND SUPPLIERS

The Contract Documents are based upon the equipment or products available from the manufacturers/ suppliers denoted within the specifications. The Base Bid must be based on the manufacturers or suppliers included in the specifications. Bidders shall circle the manufacturers included in the Base Bid as shown on the Base Bid Equipment table. If nothing is circled, then it shall be the first manufacturer listed that is expected to be provided.

Provision is made in the Contract Documents for alternate manufacturers and suppliers whose equipment or product may be deemed equivalent in quality. If the Bidder desires to propose one or more alternate manufacturers/suppliers, the Bidder may write in the name of such alternates in the spaces provided on the attached schedule. Wherever an alternate manufacturer/supplier is proposed, the Bidder must insert the amount to be deducted from the Contract Price (either lump sum or unit price) if the alternate manufacturer/supplier is eventually approved.

If the Owner determines that it is in the best interest of the project to review the alternate manufacturer then the Owner will request that the Bidder supply complete information on proposed alternates for review prior to the Notice of Award. If the proposed alternate manufacturer/supplier is not determined to be in the best interest for this project or is not acceptable to the Owner or Engineer, the Bidder shall use their circled specified manufacturers or suppliers.

The deductive amount specified for alternate manufacturers/suppliers will not be used in determining the successful Bidder. Alternates will be considered only after award of the Contract.

For any alternate manufacturer or supplier accepted by the Owner, the Contract Price will be reduced by the deductive amount stated in the Bid. However, because the Contract Price is based on specified manufacturers/suppliers it will not be adjusted for any alternate supplier rejected.

The Contractor shall reimburse the Owner for any costs directly attributable to the change in manufacturer or supplier, such as additional field trips for the Engineer, additional redesign costs, additional review and inspection costs, etc.

BASE BID EQUIPMENT

Equipment Item or Material	Spec Section	Manufacturer/Supplier
Wet-Pit Submersible Solids Handling Pump	432513.11	WILO USA

ALTERNATE MANUFACTURERS/SUPPLIERS

Bidder proposes the following alternate manufacturers and suppliers for the equipment or material categories identified:

Equipment Item or Material	Drawing No.	Spec. Section	Alternative Manufacturer/Supplier (List One Only)	Deductible Amount (Indicate whether lump sum or unit price)
1.				
2.				
3.				
4.				
5.				

SCHEDULE OF SUBCONTRACTORS

Bidder proposes the following subcontractors to be used for the Project. All subcontractor specialties indicated below and any subcontractors that, due to the nature of the construction work, comprise a critical or essential element of the construction such that the amount of the subcontract is equal to or greater than 10% of the construction budget or $50,000, whichever is greater must be listed and submitted with the Bid. Bidders shall provide the address and phone number for each subcontractor listed and three (3) references for similar size and type of project (Attachment D of Section 00400) with the Bid in accordance with Section 00100. The references shall include name of project, and contact information, including name, phone number and address, for the Owner, Engineer and General Contractor for each project. Failure to provide this information by the specified date and time will disqualify the bid from consideration.

Bidder may change subcontractors after bid submittal only as approved in writing by the Engineer. The information provided will be used in the evaluation of the Bidder.

SUBCONTRACTOR	SPECIALTY
1.	Electrical
2.	Instrumentation and Controls
3.	
4.	
5.	

6.01 Bidder agrees that the Work will be substantially complete and fully complete project and ready for final payment as noted in Section 00500.

6.02 Bidder accepts the provisions of the Agreement as to liquidated damages in the event of failure to complete the Work within the times specified above, which shall be stated in the Agreement.

7.01 The following documents are attached to and made a condition of this Bid:

A. Required Bid security in the form of _____.

B. Section 00400, Statement of Bidder's Experience, including Attachments A – I.

8.01 The terms used in this Bid with initial capital letters have the meanings indicated in the Instructions to Bidders, the General Conditions, and the Supplementary Conditions.

SUBMITTED on _____, 20____.

If Bidder is:
An Individual

Name (typed or printed): _____

By: _____ (SEAL)
(Individual's signature)
Doing business as: _____
Business address: _____
_____
Phone No.: _____ FAX No.: _____

A Partnership

Partnership Name: _____ (SEAL)

By: _____
(Signature of general partner -- attach evidence of authority to sign)

Name (typed or printed): _____

Business address: _____
_____
Phone No.: _____ FAX No.: _____

A Corporation

Corporation Name: _____ (SEAL)
State of Incorporation: _____
Type (General Business, Professional, Service, Limited Liability):_____

By: _____
(Signature -- attach evidence of authority to sign)

Name (typed or printed): _____

Title: _____
(CORPORATE SEAL)
Attest _____
(Signature of Corporate Secretary)

Business address: _____
_____
Phone No.: _____ FAX No.: _____
Date of Qualification to do business is _____.

A Joint Venture

Joint Venturer Name: _____ (SEAL)

By: _____
(Signature of joint venture partner -- attach evidence of authority to sign)

Name (typed or printed): _____

Title: _____

Business address: _____
_____
Phone No.: _____ FAX No.: _____

Joint Venturer Name: _____ (SEAL)

By: _____
(Signature -- attach evidence of authority to sign)

Name (typed or printed): _____
Title: _____
Business address: _____
_____
Phone No.: _____ FAX No.: _____

Phone and FAX Number, and Address for receipt of official communications:

_____

_____
(Each joint venturer must sign. The manner of signing for each individual, partnership, and corporation that is a party to the joint venture should be in the manner indicated above.)

SECTION 00400
STATEMENT OF BIDDER'S EXPERIENCE

BIDDER'S NAME: _____

Project Name: Cedar Breaks and D B Wood Lift Stations

All questions on this form must be answered and data given must be clear and comprehensive. If necessary, questions may be continued on separately attached sheets.

PART 1, PART 2, and PART 3 below are to be submitted as part of the Bid, in accordance with Section 00100.

PART 1 – GENERAL

1.1 Bidder must submit Attachments A through I contained in this Statement of Bidder's Experience form signed and notarized with its Bid. Failure to do so will constitute an incomplete Bid, which will be rejected. Information must be provided to the OWNER as part of the formal Bid. Submit the required forms in accordance with Article 15, Section 00100, Instructions to Bidders.

1.2 The Bidder and OWNER agree that, in determining the apparent low Bid, the responsibility of the Bidders will be considered in awarding a Contract for this Project. In connection therewith, all Bidders are required to submit a set of additional completed attachments to the Statement of Bidder's Experience Form for the OWNER's consideration. The Contract will be awarded by the OWNER to the lowest responsible Bidder. Submit the required forms in accordance with Article 15, Section 00100, Instructions to Bidders.

PART 2 – BIDDER'S INFORMATION

2.1 Bidder's Information

In order to make a responsive Bid, Bidder must answer all questions completely and all information must be clear, accurate and comprehensive. If necessary, questions may be answered on separate attached sheets. **The forms to complete this requirement are attached hereto as Attachment A.**

PART 3 – EXPERIENCE REQUIREMENTS

The Bidder must provide the following information with its Bid:

3.1 In order to make a responsive Bid, the Bidder must provide evidence of a minimum of three (3) successfully completed water or wastewater lift, booster, or pumping station installation projects of comparable size (minimum value of $1 million each), complexity and scope (at least two projects must be at operational lift, booster, or pumping stations) within the United States successfully completed by the Bidder within the past ten (10) years, meeting the criteria listed on this form in subsection 3.1.1, if applicable. This documentation shall be presented sufficiently and completely to demonstrate that water or wastewater lift, booster, or pumping station installations are one of the primary business focus and services provided by the Bidder, and that such services have been successfully provided by the Bidder for at least **ten (10)** continuous year(s). **The forms to complete this requirement are attached hereto as Attachment B.**

If the Bidder chooses to fulfill any of the specific experience requirements listed in this document with subcontracted resources, the Bidder must indicate so on Attachment B, to be submitted with its bid, in accordance with Section 00100. Additionally, Attachments E and I must be submitted with its bid in accordance with paragraph 1.1, above, and in accordance with Section 00100.

3.1.1 The Bidder shall demonstrate experience in the following area(s) on its successfully completed projects:

- At least one of the three water or wastewater lift, booster, or pumping station installation projects identified by the Bidder in its experience statement must have been located in the Edwards Aquifer Contributing Zone and/or the Edwards Aquifer Recharge Zone.

3.2 In order to make a responsive Bid, the Bidder shall provide information on the experience of its proposed Project Manager and Superintendent by completing Attachment C, located at the end of this Section. The submitted Attachment C should include information and resumes for both the Bidder's Project Manager and Superintendent, indicating a minimum of three (3) successfully completed projects of similar size, complexity, and scope within the past ten (10) years. **The forms to complete this requirement are attached hereto as Attachment C.**

<u>The Bidder shall provide the following information at the time of bid, in accordance with Section 00100.</u>

3.3 **The same requirements shall apply to each major Subcontractor proposed for this project.** Major Subcontractors for this project: <u>Electrical and Instrumentation</u>. Should it be the intention of the Bidder to perform all or a portion of these services with its own forces, the Bidder shall provide previous project experience in the respective section demonstrating that the Bidder has previously successfully performed these services. Bidder must provide information on each major Subcontractor by completing Attachment D, located at the end of this Section. **The forms to complete this requirement are attached hereto as Attachment D.**

3.4 The OWNER seeks CONTRACTORS that can complete the Work within the Contract time given for completion. Anything that might negatively impact a Bidder's ability to timely complete the Work may result in the Bidder being determined to not be the most responsible Bidder.

3.5 A completed Attachment E (located at the end of this section) providing a list of equipment that is available to the CONTRACTOR / Subcontractor(s) and **specifically intended to be used on the Work under this Contract,** and notification whether the equipment is owned or to be leased by the CONTRACTOR and/or Subcontractor(s).

3.6 A completed Attachment F (located at the end of this section) providing a list of the available workforce for the various disciplines and crafts required for the Work on this project including the number of work crews, and number of employees anticipated to be assigned to the project.

3.7 A completed Attachment G (located at the end of this section) providing a list of all current projects, including ***all City of Georgetown projects***. Include the following: a brief statement regarding the job type, the estimated project duration, project contact, and project description of all jobs that Bidder is currently committed to or are currently underway.

3.8 A completed Attachment H (located at the end of this section) providing a list of all completed projects, including ***all City of Georgetown projects***. Include the following: a brief statement regarding the job type, the estimated project duration, project contact, and project description of the jobs that Bidder has completed in the past Ten (10) years by calendar year or life of company if less than Ten (10) years.

3.9 Authentication

The Bidder must authenticate and acknowledge the preceding information by providing witness in the presence of a notary public duly licensed and authorized to act in that capacity under the laws and statutes of the State of Texas, on the form provided on the following page. **The forms to complete this requirement are attached hereto as Attachment A through I.**

This page intentionally left blank.

Attachment A

BIDDER'S INFORMATION

(To be returned with the Bid in accordance with Section 00100)

Bidder must answer all questions completely and all information must be clear, accurate and comprehensive. If necessary, questions may be answered on separate attached sheets.

A. Name of Bidder: _____

B. Bidder's Permanent Address: _____

C. Bidder's Phone No.: _____

D. Number of years in business under current company name: _____

(Note: A minimum of Ten (10) year's existence as a business is required under the current company name. Changes in company name during the experience period are acceptable if the continuity of the company structure can be demonstrated. Attach separate documentation, if applicable.)

If response is "YES" for questions E – H, attach brief description or explanation

E. Has the Bidder ever defaulted on a contract?

YES (____) NO (____)

F. Are there currently any judgments, claims, or lawsuits pending against the Bidder?

YES (____) NO (____)

G. Does Bidder currently have any claims, judgments or lawsuits pending against any prior client?

YES (____) NO (____)

H. Is the Bidder or principals of Bidder now, or has the Bidder or principals of Bidder ever been, involved in any bankruptcy or reorganization proceedings?

YES (____) NO (____)

This page intentionally left blank.

Attachment B

STATEMENT OF EXPERIENCE

(To be returned with the Bid in accordance with Section 00100)

Using the summary format included below, list and describe Bidder's construction experience for a minimum of three (3) successfully completed projects of comparable size, scope and complexity to the Work described in the Contract Documents. The Bidder must have completed the projects within the past Ten (10) years. Part 3 of this section outlines the experience requirements which must be demonstrated with the three (3) successfully completed sample projects. (Use additional sheets as deemed necessary or appropriate.)

Are any of the experience requirements outlined in Part 3 to be fulfilled by subcontracted resources? (circle one) YES / NO

NOTE: If yes, Attachment E (Statement of Experience for Bidder's Listed Subcontractors) and Attachment J (Authentication of Post-Bid Submittal) as well as any other required Post-Bid forms must be submitted as a Post-Bid Submittal as outlined in Paragraph 1.2 of Section #00400.

Water or Wastewater Pipeline Project No. 1 - Experience

Name of Project: _____ Location: _____

OWNER's Name and Address: _____

OWNER's Contact Person (Print): _____ Phone/Fax No.:_____/_____

Payment Bond (circle one) YES / NO

Performance Bond (circle one) YES / NO

Initial Contract Price: _____ Final Contract Price: _____

Contract Start Date: _____ (Date of Notice To Proceed)

Contract Time: _____( ) Calendar Days ( ) Working Days

Contract Substantial Completion Date: _____

Actual Substantial Completion Date: _____

If contract completion time extensions were added to the contract as a result of Bidder's responsibilities, provide a short explanation of each.

_____

_____

_____

Project Description and Statement of Relevance to this Contract:

_____

_____

_____

_____

_____

Water or Wastewater Pipeline Project No. 2 - Experience

Name of Project: _____ Location: _____

OWNER's Name and Address: _____

OWNER's Contact Person (Print): _____ Phone/Fax No.:_____/_____

Payment Bond (circle one) YES / NO

Performance Bond (circle one) YES / NO

Initial Contract Price: _____ Final Contract Price: _____

Contract Start Date: _____ (Date of Notice To Proceed)

Contract Time: _____( ) Calendar Days ( ) Working Days

Contract Substantial Completion Date: _____

Actual Substantial Completion Date: _____

If contract completion time extensions were added to the contract as a result of Bidder's responsibilities, provide a short explanation of each.

_____

_____

_____

Project Description and Statement of Relevance to this Contract:

_____

_____

_____

_____

_____

_____

_____

Water or Wastewater Pipeline Project. 3 - Experience

Name of Project: _____ Location: _____

OWNER's Name and Address: _____

OWNER's Contact Person (Print): _____ Phone/Fax No.:_____/_____

Payment Bond (circle one) YES / NO

Performance Bond (circle one) YES / NO

Initial Contract Price: _____ Final Contract Price: _____

Contract Start Date: _____ (Date of Notice To Proceed)

Contract Time: _____( ) Calendar Days ( ) Working Days

Contract Substantial Completion Date: _____

Actual Substantial Completion Date: _____

If contract completion time extensions were added to the contract as a result of Bidder's responsibilities, provide a short explanation of each.

_____

_____

_____

Project Description and Statement of Relevance to this Contract:

_____

_____

_____

_____

_____

_____

This page intentionally left blank.

Attachment C

STATEMENT OF EXPERIENCE FOR BIDDER'S LISTED PROJECT MANAGER & SUPERINTENDENT

(To be returned with the Bid in accordance with Section 00100)

Attach resumes for the following personnel who will be assigned to this project. The resumes must demonstrate that these individuals have worked on at least three similar, successfully completed projects in the capacity of Project Manager or Superintendent, or other supervisory capacity, as applicable, during the last 10 years.

Project Manager (name): _____

Superintendent (name): _____

Insert Resumes & Experience

This page intentionally left blank.

Attachment D

STATEMENT OF EXPERIENCE FOR BIDDER'S LISTED SUBCONTRACTORS

(To be returned with the Bid in accordance with Section 00100)

Name of Bidder: _____

Bidder must supply the following project history information for each major Subcontractor included for the Work. OWNER may reject any Subcontractor whose project history information OWNER deems insufficient for the task. Bidder must answer all questions completely and all information must be clear, accurate and comprehensive. If necessary, questions may be answered on separate attached sheets. Use multiple copies of Attachment E to ensure a submittal for every Major Subcontractor.

Major Subcontractor's type of work: _____

Name of Major Subcontractor: _____

Subcontractor's Permanent Address: _____

Subcontractor's Phone No.: _____

Number of years in business under current company name: _____

Project No. 1 - Major Subcontractor's Experience Information

Name of Project: _____ Location: _____

OWNER's Name and Address: _____

OWNER's Contact Person (Print): _____ Phone No.:_____

Project Description and Statement of Relevance to this Contract: _____

_____

_____

_____

_____ Subcontract Price: _____

Contract Start Date: _____ (Date of Notice To Proceed)

Contract Time: _____ ( ) Calendar Days ( ) Working Days

Contract Substantial Completion Date: _____

Actual Substantial Completion Date: _____

If contract completion time extensions were added to the contract as a result of subcontract responsibilities, provide a short explanation of each.

_____

_____

Project No. 2 - Major Subcontractor's Experience Information

Name of Project: _____ Location: _____

OWNER's Name and Address: _____

OWNER's Contact Person (Print): _____ Phone No.:_____

Project Description and Statement of Relevance to this Contract: _____

_____

_____

_____ Subcontract Price: _____

Contract Start Date: _____ (Date of Notice to Proceed)

Contract Time: _____ ( ) Calendar Days ( ) Working Days

Contract Substantial Completion Date: _____

Actual Substantial Completion Date: _____

If contract completion time extensions were added to the contract as a result of subcontract responsibilities, provide a short explanation of each.

_____

_____

_____

Project No. 3 - Major Subcontractor's Experience Information

Name of Project: _____ Location: _____

OWNER's Name and Address: _____

OWNER's Contact Person (Print): _____ Phone No.:_____

Project Description and Statement of Relevance to this Contract: _____

_____

_____

_____ Subcontract Price: _____

Contract Start Date: _____ (Date of Notice to Proceed)

Contract Time: _____ ( ) Calendar Days ( ) Working Days

Contract Substantial Completion Date: _____

Actual Substantial Completion Date: _____

If contract completion time extensions were added to the contract as a result of subcontract responsibilities, provide a short explanation of each.

_____

_____

_____

This page intentionally left blank.

Attachment E

AVAILABLE EQUIPMENT LIST

(To be returned with the Bid in accordance with Section 00100)

Provide a list of equipment that is available to the CONTRACTOR / Subcontractor(s) and specifically intended to be used on the Work under this Contract, and notification whether the equipment is owned or to be leased by the CONTRACTOR and/or Subcontractor(s).

EQUIPMENT	**OWNED OR LEASED**	**COMMITTED TO ANOTHER PROJECT?** (Yes / No)	**AVAILABLE / RELEASE DATE**

Use additional pages, as necessary

This page intentionally left blank.

Attachment F

AVAILABLE WORKFORCE

(To be returned with the Bid in accordance with Section 00100)

Provide a list of the available workforce for the various disciplines and crafts required for the Work on this project including the number of work crews, and number and worker classification for each equipment operator, mechanic and laborer for that portion of the Work that Bidder will actually perform.

Number of Anticipated Work Crews: _____

DISCIPLINE OR CRAFT	NO. OF EMPLOYEES	COMMITTED TO ANOTHER PROJECT? (Yes / No)	AVAILABLE / RELEASE DATE
Professional (specify)			
Superintendent			
Technical (specify)			
Skilled Workers (specify)			
Semiskilled Workers (specify)			
Equipment Operators (list)			
Other			
Other			
Other			

Use additional pages, as necessary

This page intentionally left blank.

Attachment G

CURRENT PROJECT LISTING (INCLUDING ALL CITY OF GEORGETOWN PROJECTS)

(To be returned with the Bid in accordance with Section 00100)

Provide a list of **all current projects**, including ***all City of Georgetown projects***. Include the following: a brief statement regarding the job type, the estimated project duration, project contact, and project description of all jobs that Bidder is currently committed to or are currently underway.

Name of Project: _____ Location: _____

Type of Job: _____ City of Georgetown Job? (circle one) Yes / No

Project Start Date: _____ Estimated Completion Date: _____

Project Contact: _____

Brief Description: _____

_____

Name of Project: _____ Location: _____

Type of Job: _____ City of Georgetown Job? (circle one) Yes / No

Project Start Date: _____ Estimated Completion Date: _____

Project Contact: _____

Brief Description: _____

_____

Name of Project: _____ Location: _____

Type of Job: _____ City of Georgetown Job? (circle one) Yes / No

Project Start Date: _____ Estimated Completion Date: _____

Project Contact: _____

Brief Description: _____

_____

Name of Project: _____ Location: _____

Type of Job: _____ City of Georgetown Job? (circle one) Yes / No

Project Start Date: _____ Estimated Completion Date: _____

Project Contact: _____

Brief Description: _____

_____

Use additional pages, as necessary

This page intentionally left blank.

Attachment H

PROJECT HISTORY LISTING (INCLUDING ALL CITY OF Georgetown PROJECTS)

(To be returned with the Bid in accordance with Section 00100)

Provide a list of **all completed projects**, including ***all Public projects***. Include the following: a brief statement regarding the job type, the estimated project duration, project contact, and project description of the jobs that Bidder has completed in the past Ten (10) years by calendar year or life of company if less than Ten (10) years.

Calendar Year of _____

Name of Project: _____ Location: _____

Type of Job: _____ City of Georgetown Job? (circle one) Yes / No

Project Duration: _____ Project Contact: _____

Brief Description: _____

_____

_____

Name of Project: _____ Location: _____

Type of Job: _____ City of Georgetown Job? (circle one) Yes / No

Project Duration: _____ Project Contact: _____

Brief Description: _____

_____

_____

Name of Project: _____ Location: _____

Type of Job: _____ City of Georgetown Job? (circle one) Yes / No

Project Duration: _____ Project Contact: _____

Brief Description: _____

_____

_____

Name of Project: _____ Location: _____

Type of Job: _____ City of Georgetown Job? (circle one) Yes / No

Project Duration: _____ Project Contact: _____

Brief Description: _____

_____

_____

Use additional pages as necessary to achieve a representative listing covering 10 years

This page intentionally left blank.

Attachment I

AUTHENTICATION OF BID SUBMITTAL

(To be returned with the Bid in accordance with Section 00100)

The Bidder must authenticate and acknowledge the preceding information by providing witness in the presence of a notary public duly licensed and authorized to act in that capacity under the laws and statutes of the State of Texas, on the form provided on the following page.

NOTARIZE ONLY THE LAST PAGE OF THIS FORM

Signed By: _____ Typed Name: _____

Typed Title: _____

Limited Partnership Acknowledgement

State of Texas

County of _____

Before me _____ (insert Notary's name), a Notary Public, on this day personally appeared _____ (insert name of person signing on behalf of general partner of limited partnership), _____, title of officer or manager and _____, name of corporation or LLC); the General Partner of _____ (insert name of limited partnership), known to me personally or on the basis of legally sufficient identification to be the person whose name is subscribed to the foregoing instrument and acknowledged to me that he or she executed the same for the purposes and consideration therein expressed.

[Seal] Given under my hand and seal of office this ____day of _____, A.D., 20_____.

_____

Notary Public, State of Texas

Signed By: _____ Typed Name: _____

Typed Title: _____

Corporation or Limited Liability Company Acknowledgement

State of Texas

County of _____

Before me _____ (insert Notary's name), a Notary Public, on this day personally appeared _____ (insert name of person signing on behalf of corporation or LLC) as _____ (title of officer or manager and name of corporation or LLC); known to me personally or on the basis of legally sufficient identification to be the person whose name is subscribed to the foregoing instrument and acknowledged to me that he or she executed the same for the purposes and consideration therein expressed.

[Seal] Given under my hand and seal of office this ____day of _____, A.D., 20_____.

_____
Notary Public, State of Texas

SECTION 00410
BID BOND

BIDDER (Name and Address):

SURETY (Name and Address of Principal Place of Business):

OWNER (Name and Address):
City of Georgetown
808 Martin Luther King, Jr. St.
Georgetown, Williamson County, Texas 78626

BID NO.: 202409
BID DUE DATE: January 18, 2024
PROJECT: Cedar Breaks and D B Wood Lift Stations
PROJECT NO.: **PRJ000101**

BOND
BOND NUMBER:
DATE (Not later than Bid due date):
PENAL SUM: _____ _____
(Words) (Figures)

IN WITNESS WHEREOF, Surety and Bidder, intending to be legally bound hereby, subject to the terms printed on the reverse side hereof, do each cause this Bid Bond to be duly executed on its behalf by its authorized officer, agent, or representative.

BIDDER	SURETY
_____(Seal)	_____(Seal)
Bidder's Name and Corporate Seal	Surety's Name and Corporate Seal
By: _____	By: _____
Signature and Title	Signature and Title (Attach Power of Attorney)
Attest: _____	Attest: _____
Signature and Title	Signature and Title

Note: (1) Above addresses are to be used for giving required notice.
(2) Any singular reference to Bidder, Surety, OWNER or other party shall be considered plural where applicable.

1. Bidder and Surety, jointly and severally, bind themselves, their heirs, executors, administrators, successors and assigns to pay to OWNER upon default of Bidder the penal sum set forth on the face of this Bond.

2. Default of Bidder shall occur upon the failure of Bidder to deliver within the time required by the Bidding Documents (or any extension thereof agreed to in writing by OWNER) the executed Agreement required by the Bidding Documents and any Performance and Payment Bonds required by the Bidding Documents.

3. This obligation shall be null and void if:

3.1. OWNER accepts Bidder's Bid and Bidder delivers within the time required by the Bidding Documents (or any extension thereof agreed to in writing by OWNER) the executed Agreement required by the Bidding Documents and any Performance and Payment Bonds required by the Bidding Documents, or

3.2. All Bids are rejected by OWNER, or

3.3. OWNER fails to issue a Notice of Award to Bidder within the time specified in the Bidding Documents (or any extension thereof agreed to in writing by Bidder and, if applicable, consented to by Surety when required by paragraph 5 hereof).

4. Payment under this Bond will be due and payable upon default by Bidder and within 30 calendar days after receipt by Bidder and Surety of written notice of default from OWNER, which notice will be given with reasonable promptness, identifying this Bond and the Project and including a statement of the amount due.

5. Surety waives notice of and any and all defenses based on or arising out of any time extension to issue Notice of Award agreed to in writing by OWNER and Bidder, provided that the total time for issuing Notice of Award including extensions shall not in the aggregate exceed 90 days from Bid due date without Surety's written consent.

6. No suit or action shall be commenced under this Bond prior to 30 calendar days after the notice of default required in paragraph 4 above is received by Bidder and Surety and in no case later than one year after Bid due date.

7. Any suit or action under this Bond shall be commenced only in a court of competent jurisdiction located in the state in which the Project is located.

8. Notices required hereunder shall be in writing and sent to Bidder and Surety at their respective addresses shown on the face of this Bond. Such notices may be sent by personal delivery, commercial courier or by United States Registered or Certified Mail, return receipt requested, postage pre-paid, and shall be deemed to be effective upon receipt by the party concerned.

9. Surety shall cause to be attached to this Bond a current and effective Power or Attorney evidencing the authority of the officer, agent or representative who executed this Bond on behalf of Surety to execute, seal and deliver such Bond and bind the Surety thereby.

10. This Bond is intended to conform to all applicable statutory requirements. Any applicable requirement of any applicable statute that has been omitted from this Bond shall be deemed to be included herein as if set forth at length. If any provision of this Bond conflicts with any applicable statute, then the provision of said statute shall govern and the remainder of this Bond that is not in conflict therewith shall continue in full force and effect.

11. The term "Bid" as used herein includes a Bid, offer or proposal as applicable.

SECTION 00500
STANDARD FORM OF AGREEMENT BETWEEN OWNER AND CONTRACTOR FOR CONSTRUCTION CONTRACT

THIS AGREEMENT is by and between the City of Georgetown, Texas, a home-rule city and municipal corporation with principal offices located at 808 Martin Luther King, Jr. St., Georgetown, Williamson County, Texas 78626 (hereinafter called Owner) and _____ (hereinafter called Contractor).

Owner and Contractor hereby agree as follows:

ARTICLE 1 – WORK

1.01 Contractor shall complete all Work as specified or indicated in the Contract Documents. The Work is generally described as follows:

Cedar Breaks and D B Wood Lift Stations

ARTICLE 2 – THE PROJECT

2.01 The Project for which the Work under the Contract Documents may be the whole or only a part is generally described as follows:

A. The project consists of furnishing, installing and providing all labor and materials required for the construction of the Cedar Breaks and D B Wood Lift Stations project as more fully described in the drawings and the summary of work contained in Section CIP3.

2.02 The Project has been designed by: CDM Smith Inc., 8310-1 N. Capital of Texas Hwy., Suite 250, Austin, Texas 78731 (Engineer), which is to act as Owner's representative, assume all duties and responsibilities, and have the rights and authority assigned to Engineer in the Contract Documents in connection with the completion of the Work in accordance with the Contract Documents.

ARTICLE 3 – CONTRACT TIMES

3.01 *Time of the Essence*

A. All time limits for Milestones, if any, Substantial Completion, and completion and readiness for final payment as stated in the Contract Documents are of the essence of the Contract.

3.02 *Dates for Substantial Completion and Final Payment*

A. The Work will be substantially completed in 487 days from Notice to Proceed: and completed and ready for final payment in accordance with Paragraph 14.07 of the General Conditions in 547 days from Notice to Proceed.

3.03 *Liquidated Damages*

A. Contractor and Owner recognize that time is of the essence as stated in Paragraph 3.01 above and that Owner will suffer financial loss if the Work is not completed within the times specified in Paragraph 3.02 above, plus any extensions thereof allowed in accordance with Article 12 of the General Conditions. The parties also recognize the delays, expense, and difficulties involved in proving in a legal or arbitration proceeding the actual loss suffered by Owner if the Work is not completed on time. Accordingly, instead of requiring any such proof, Owner and Contractor agree that as liquidated damages for delay (but not as a penalty), Contractor shall pay Owner $1,500.00 for each calendar day that expires after the time specified in Paragraph 3.02 above for Substantial Completion until the Work is substantially complete. After Substantial Completion, if Contractor shall neglect, refuse, or fail to complete the remaining Work within the Contract Time or any proper extension thereof granted by Owner, Contractor shall pay Owner $1,000.00 for each calendar day that expires after the time specified in Paragraph 3.02 above for completion and readiness for final payment until the Work is completed and ready for final payment.

3.04 Contractor shall commence performance of the Work on the date when the Contract Times commence to run.

ARTICLE 4 – CONTRACT PRICE

4.01 Owner shall pay Contractor for completion of the Work in accordance with the Contract Documents an amount in current funds equal to the sum of the amounts determined pursuant to Paragraphs 4.01.A below:

A. For all Work, at the prices stated in Contractor's Bid, shown below.

$ _____
(FIGURES)

_____
(WRITTEN)

4.02 Owner agrees to pay Contractor from available funds for satisfactory performance of this Agreement in accordance with Contract Documents, and Owner agrees to make payment on account thereof as provided in the Contract Documents. Lack of funds shall render this Agreement null and void to the extent funds are not available.

ARTICLE 5 – PAYMENT PROCEDURES

5.01 *Submittal and Processing of Payments*

A. Contractor shall submit Applications for Payment in accordance with Article 14 of the General Conditions. Applications for Payment will be processed by Engineer as provided in the General Conditions.

5.02 *Progress Payments; Retainage*

A. Owner shall make progress payments on account of the Contract Price on the basis of Contractor's Applications for Payment on or about the **Third Monday** of each month during performance of the Work as provided in Paragraph 5.02.A.1 below. All such payments will be measured by the schedule of values established as provided in Paragraph 2.07.A of the General

Conditions (and in the case of Unit Price Work based on the number of units completed) or, in the event there is no schedule of values, as provided in the General Requirements.

1. Prior to Substantial Completion, progress payments will be made in an amount equal to the percentage indicated below but, in each case, less the aggregate of payments previously made and less such amounts as Engineer may determine or Owner may withhold, including but not limited to liquidated damages, in accordance with Paragraph 14.02 of the General Conditions.

   a. **95** percent of Work completed (with the balance being retainage). If the Work has been 50 percent completed as determined by Engineer, and if the character and progress of the Work have been satisfactory to Owner and Engineer, then as long as the character and progress of the Work remain satisfactory to Owner and Engineer, there will be no additional retainage; and

   b. **95** percent of cost of materials and equipment not incorporated in the Work (with the balance being retainage).

B. Upon Substantial Completion, Owner shall pay an amount sufficient to increase total payments to Contractor to 100 percent of the Work completed, less such amounts as Engineer shall determine in accordance with Paragraph 14.02.B.5 of the General Conditions and less 200 percent of Engineer's estimate of the value of Work to be completed or corrected as shown on the tentative list of items to be completed or corrected attached to the certificate of Substantial Completion.

5.03 *Final Payment*

A. Upon final completion and acceptance of the Work in accordance with Paragraph 14.07 of the General Conditions, Owner shall pay the remainder of the Contract Price as recommended by Engineer as provided in said Paragraph 14.07.

ARTICLE 6 – INTEREST

6.01 All moneys not paid when due as provided in Article 14 of the General Conditions shall bear interest as provided in Tex. Gov. Code Chapter 2251.

ARTICLE 7 – CONTRACTOR'S REPRESENTATIONS

7.01 In order to induce Owner to enter into this Agreement, Contractor makes the following representations:

A. Contractor has examined and carefully studied the Contract Documents and the other related data identified in the Bidding Documents.

B. Contractor has visited the Site and become familiar with and is satisfied as to the general, local, and Site conditions that may affect cost, progress, and performance of the Work.

C. Contractor is familiar with and is satisfied as to all federal, state, and local Laws and Regulations that may affect cost, progress, and performance of the Work.

D. Contractor has carefully studied all: (1) reports of explorations and tests of subsurface conditions at or contiguous to the Site and all drawings of physical conditions relating to existing surface or subsurface structures at the Site (except Underground Facilities), if any, that have been identified in Paragraph 4.02 of the General Conditions as containing reliable "technical data," and (2) reports and drawings of Hazardous Environmental Conditions, if any, at the Site that have been identified in the Supplementary Conditions as provided in Paragraph 4.06 of the General Conditions.

E. Contractor has considered the information known to Contractor; information commonly known to contractors doing business in the locality of the Site; information and observations obtained from visits to the Site; the Contract Documents; and the Site-related reports and drawings identified in the Contract Documents, with respect to the effect of such information, observations, and documents on (1) the cost, progress, and performance of the Work; (2) the means, methods, techniques, sequences, and procedures of construction to be employed by Contractor, including any specific means, methods, techniques, sequences, and procedures of construction expressly required by the Contract Documents; and (3) Contractor's safety precautions and programs.

F. Based on the information and observations referred to in Paragraph 7.01.E above, Contractor does not consider that further examinations, investigations, explorations, tests, studies, or data are necessary for the performance of the Work at the Contract Price, within the Contract Times, and in accordance with the other terms and conditions of the Contract Documents.

G. Contractor is aware of the general nature of work to be performed by Owner and others at the Site that relates to the Work as indicated in the Contract Documents.

H. Contractor has given Engineer written notice of all conflicts, errors, ambiguities, or discrepancies that Contractor has discovered in the Contract Documents, and the written resolution thereof by Engineer is acceptable to Contractor.

I. The Contract Documents are generally sufficient to indicate and convey understanding of all terms and conditions for performance and furnishing of the Work.

ARTICLE 8 – CONTRACT DOCUMENTS

8.01 *Contents*

A. The Contract Documents consist of the following:

1. This Agreement (pages 1 to 8, inclusive).
2. Performance bond (pages 1 to 2, inclusive).
3. Payment bond (pages 1 to 2, inclusive).
4. Bid bonds (pages 1 to 2, inclusive).
5. Certificate of Insurance
6. Form 1295

7. General Conditions (pages 1 to 49, inclusive).

8. Supplementary Conditions (pages 1 to 13, inclusive).

9. Specifications as listed in the table of contents of the Project Manual.

10. Drawings consisting of ___ sheets with each sheet bearing the following general title: Cedar Breaks and D B Wood Lift Stations, December 2023.

11. Addenda (numbers ___, inclusive).

12. Exhibits to this Agreement (enumerated as follows):

    a. Contractor's Bid (pages 00300-1 to 00300-10, inclusive).

    b. Documentation submitted by Contractor prior to Notice of Award (pages ___ to ___, inclusive).

    c. Section 00100 Instructions to Bidders (pages 1 to 12, inclusive).

13. The following which may be delivered or issued on or after the Effective Date of the Agreement and are not attached hereto:

    a. Notice to Proceed (pages 1 to 2, inclusive).

    b. Work Change Directives.

    c. Change Orders.

    d. Written Amendments.

B. The documents listed in Paragraph 8.01.A are attached to this Agreement (except as expressly noted otherwise above).

C. There are no Contract Documents other than those listed above in this Article 8.

D. The Contract Documents may only be amended, modified, or supplemented as provided in Paragraph 3.04 of the General Conditions.

E. To the extent of any direct conflict or inconsistency between any of the Contract Documents, the Contractor shall immediately seek clarification from the Engineer and notify the Owner that clarification has been requested. The Engineer shall clarify such discrepancy, within a reasonable time under the circumstances.

ARTICLE 9 – MISCELLANEOUS

9.01 *Terms*

A. Terms used in this Agreement will have the meanings stated in the General Conditions and the Supplementary Conditions.

9.02 *Assignment of Contract*

A. No assignment by a party hereto of any rights under or interests in the Contract will be binding on another party hereto without the written consent of the party sought to be bound; and, specifically but without limitation, moneys that may become due and moneys that are due may not be assigned without such consent (except to the extent that the effect of this restriction may be limited by law), and unless specifically stated to the contrary in any written consent to an assignment, no assignment will release or discharge the assignor from any duty or responsibility under the Contract Documents.

9.03 *Successors and Assigns*

A. Owner and Contractor each binds itself, its partners, successors, assigns, and legal representatives to the other party hereto, its partners, successors, assigns, and legal representatives in respect to all covenants, agreements, and obligations contained in the Contract Documents.

9.04 *Severability*

A. Any provision or part of the Contract Documents held to be void or unenforceable under any Law or Regulation shall be deemed stricken, and all remaining provisions shall continue to be valid and binding upon Owner and Contractor, who agree that the Contract Documents shall be reformed to replace such stricken provision or part thereof with a valid and enforceable provision that comes as close as possible to expressing the intention of the stricken provision.

9.05 *Contractor's Certifications*

A. Contractor certifies that it has not engaged in corrupt, fraudulent, collusive, or coercive practices in competing for or in executing the Contract. For the purposes of this Paragraph 10.05:

1. "corrupt practice" means the offering, giving, receiving, or soliciting of any thing of value likely to influence the action of a public official in the bidding process or in the Contract execution;

2. "fraudulent practice" means an intentional misrepresentation of facts made (a) to influence the bidding process or the execution of the Contract to the detriment of Owner, (b) to establish Bid or Contract prices at artificial non-competitive levels, or (c) to deprive Owner of the benefits of free and open competition;

3. "collusive practice" means a scheme or arrangement between two or more Bidders, with or without the knowledge of Owner, a purpose of which is to establish Bid prices at artificial, non-competitive levels; and

4. "coercive practice" means harming or threatening to harm, directly or indirectly, persons or their property to influence their participation in the bidding process or affect the execution of the Contract.

9.06 *Waiver of Breach*

A. Waiver of any breach of this Agreement shall not constitute waiver of any subsequent breach.

IN WITNESS WHEREOF, Owner and Contractor have signed this Agreement. Counterparts have been delivered to Owner and Contractor. All portions of the Contract Documents have been signed or have been identified by Owner and Contractor or on their behalf.

This Agreement will be effective on _____ (which is the Effective Date of the Agreement).

OWNER:	CONTRACTOR
City of Georgetown	_____
By: _____	By: _____
Title: Josh Schroeder, Mayor	Title: _____

Attest: _____

Title: City Secretary

Address for giving notices:	Address for giving notices:
808 Martin Luther King Jr. St.	_____
Georgetown, TX 78626	_____
_____	_____

APPROVED AS TO FORM:

_____
City Attorney

This page intentionally left blank.

Notice of Award

Date: _____

Project: Cedar Breaks and D B Wood Lift Stations	
Owner: City of Georgetown	Owner's Contract No.:
Project No.: PRJ000101	Engineer's Project No.: 272644
Bidder:	
Bidder's Address:	

You are notified that your Bid dated _____ for the above Contract has been considered. You are the Successful Bidder and are awarded a Contract for Cedar Breaks and D B Wood Lift Stations.

The project consists of furnishing, installing and providing all labor and materials required for the construction of the Cedar Breaks and D B Wood Lift Stations project as more fully described in the drawings and the summary of work contained in Section CIP3.

The Contract Price of your Contract is _____ Dollars ($).

(3) copies of the proposed Contract Documents (except Drawings) accompanied the Notice of Award.

Sets of the Drawings will be delivered separately or otherwise made available to you immediately.

You must comply with the following conditions precedent within 15 days of the date you receive this Notice of Award, if you have not already.

1. Deliver to the Owner 3 fully executed counterparts of the Contract Documents.
2. Deliver with the executed Contract Documents the Contract security [Bonds] as specified in the Instructions to Bidders (Article 20), General Conditions (Paragraph 5.01), and Supplementary Conditions (Paragraph SC-5.01).

Failure to comply with these conditions within the time specified will entitle Owner to consider you in default, annul this Notice of Award, and declare your Bid security forfeited.

Within ten days after you comply with the above conditions, Owner will return to you one fully executed counterpart of the Contract Documents.

City of Georgetown
Owner

By:_____
Authorized Signature

CIP Manager
Title

Copy to Engineer

This page intentionally left blank.

Notice to Proceed

Date: _____

Project: Cedar Breaks and D B Wood Lift Stations	
Owner: City of Georgetown	Owner's Contract No.: 202409
Project No.: PRJ000101	Engineer's Project No.: 272644
Contractor: .	
Contractor's Address:	

You are notified that the Contract Times under the above Contract will commence to run on _____. On or before that date, you are to start performing your obligations under the Contract Documents. In accordance with Article 4 of the Agreement, the number of days to achieve Substantial Completion is 487 calendar days, and the number of days to achieve readiness for final payment is 547 calendar days.

Before you may start any Work at the Site, Paragraph 2.01.B of the General Conditions provides that you and Owner must each deliver to the other (with copies to Engineer and other identified additional insureds and loss payees) certificates of insurance which each is required to purchase and maintain in accordance with the Contract Documents.

Also, before you may start any Work at the Site, you must:

1. Submit and receive approval on the construction sequence and schedule of values.
2. Hold the pre-construction meeting.

City of Georgetown
Owner
Given by:

Authorized Signature
CIP Manager
Title

Date

Copy to Engineer

This page intentionally left blank.

SECTION 00610
TEXAS STATUTORY PERFORMANCE BOND

Bond No.:

KNOW ALL MEN BY THESE PRESENTS:

THAT, _____(hereinafter called the Principal, and _____, a corporation organized and existing under the laws of the State of Texas, licensed to do business in the State of Texas and admitted to write bonds, as surety, (hereinafter called the Surety), are held and firmly bound unto the City of Georgetown, Texas (hereinafter called the Obligee), in the amount of _____Dollars ($_____) for the payment whereof, the said Principal and Surety bind themselves, and their heirs, administrators, executors, successors, and assigns, jointly and severally, firmly by these presents.

WHEREAS, the Principal has entered into a certain contract with the Obligee, dated the _____day of _____, 2023 for Cedar Breaks and D B Wood Lift Stations, which contract is hereinafter referred to as the "Contract."

NOW, THEREFORE, THE CONDITION OF THIS OBLIGATION IS SUCH, that if the said Principal shall faithfully perform the work required by the Contract and shall, in all respects, duly and faithfully observe and perform all and singular the covenants, conditions and agreements in and by said Contract, agreed and covenanted by the Principal to be observed and performed, including but not limited to, the repair of any and all defects in said work occasioned by and resulting from defects in materials furnished by or workmanship of, the Principal in performing the work covered by said Contract and occurring within a period of twelve (12) months from the date of Final Completion and all other covenants and conditions, according to the true intent and meaning of said Contract and the Plans and Specifications hereto annexed, then this obligation shall be void; otherwise to remain in full force and effect;

PROVIDED, HOWEVER, that this bond is executed pursuant to the provisions of Chapter 2253 of the Texas Government Code and all liabilities on this bond shall be determined in accordance with the provision, conditions and limitations of said Chapter to the same extent as if it were copied at length herein.

IN WITNESS WHEREOF, the said Principal and Surety have signed and sealed this instrument this _____day of _____, 2023.

_____	_____
Principal	Surety
_____	_____
Printed Name	Printed Name
By: _____	By: _____
Title: _____	Title: _____
Address: _____	Address: _____
_____	_____

Resident Agent of Surety:

_____
Signature

_____
Printed Name

_____
Street Address

_____
City, State & Zip Code

SECTION 00620
TEXAS STATUTORY PAYMENT BOND

Bond No.:

KNOW ALL MEN BY THESE PRESENTS:

THAT, _____(hereinafter called the Principal), as principal, and _____, a corporation organized and existing under the laws of the State of Texas, licensed to do business in the State of Texas and admitted to write bonds, as surety, (hereinafter called the Surety), are held and firmly bound unto the City of Georgetown, Texas (hereinafter called the Obligee), in the amount of _____ Dollars ($_____) for the payment whereof, the said Principal and Surety bind themselves, and their heirs, administrators, executors, successors, and assigns, jointly and severally, firmly by these presents.

WHEREAS, the Principal has entered into a certain contract with the Obligee, dated the _____ day of _____ ,2023 for Cedar Breaks and D B Wood Lift Stations, which contract is hereinafter referred to as the "Contract."

NOW, THEREFORE, THE CONDITION OF THIS OBLIGATION IS SUCH, that if the said Principal shall pay all claimants supplying labor and material to him or a subcontractor in the prosecution of the work provided for in said Contract, then, this obligation shall be null and void; otherwise to remain in full force and effect;

PROVIDED, HOWEVER, that this bond is executed pursuant to the provisions of Chapter 2253 of the Texas Government Code and all liabilities on this bond shall be determined in accordance with the provision, conditions and limitations of said Chapter to the same extent as if it were copied at length herein.

IN WITNESS WHEREOF, the said Principal and Surety have signed and sealed this instrument this _____ day of _____, 2023.

_____	_____
Principal	Surety
_____	_____
Printed Name	Printed Name
By: _____	By: _____
Title: _____	Title: _____
Address: _____	Address: _____
_____	_____

Resident Agent of Surety:

_____
Signature

_____
Printed Name

_____
Street Address

_____
City, State & Zip Code

SECTION 00650
Certificate of Insurance

THIS PAGE INTENTIONALLY LEFT BLANK

SECTION 00680

Form 1295

THIS PAGE INTENTIONALLY LEFT BLANK

This document has important legal consequences; consultation with an attorney is encouraged with respect to its use or modification. This document should be adapted to the particular circumstances of the contemplated Project and the Controlling Law.

STANDARD GENERAL CONDITIONS OF THE CONSTRUCTION CONTRACT

Prepared by

ENGINEERS JOINT CONTRACT DOCUMENTS COMMITTEE

and

Issued and Published Jointly By

PROFESSIONAL ENGINEERS IN PRIVATE PRACTICE
a practice division of the
NATIONAL SOCIETY OF PROFESSIONAL ENGINEERS

AMERICAN COUNCIL OF ENGINEERING COMPANIES

AMERICAN SOCIETY OF CIVIL ENGINEERS

This document has been approved and endorsed by

The Associated General Contractors of America

Construction Specifications Institute

Copyright © 2002 National Society of Professional Engineers for EJCDC. All rights reserved.

Copyright ©2002

National Society of Professional Engineers
1420 King Street, Alexandria, VA 22314

American Council of Engineering Companies
1015 15th Street, N.W., Washington, DC 20005

American Society of Civil Engineers
1801 Alexander Bell Drive, Reston, VA 20191-4400

These General Conditions have been prepared for use with the Suggested Forms of Agreement Between Owner and Contractor Nos. C-520 or C-525 (2002 Editions). Their provisions are interrelated and a change in one may necessitate a change in the other. Comments concerning their usage are contained in the EJCDC Construction Documents, General and Instructions (No. C-001) (2002 Edition). For guidance in the preparation of Supplementary Conditions, see Guide to the Preparation of Supplementary Conditions (No. C-800) (2002 Edition).

Copyright © 2002 National Society of Professional Engineers for EJCDC. All rights reserved.

TABLE OF CONTENTS

Page

ARTICLE 1 - DEFINITIONS AND TERMINOLOGY 6
1.01 *Defined Terms* 6
1.02 *Terminology* 8
ARTICLE 2 - PRELIMINARY MATTERS 9
2.01 *Delivery of Bonds and Evidence of Insurance* 9
2.02 *Copies of Documents* 9
2.03 *Commencement of Contract Times; Notice to Proceed* 9
2.04 *Starting the Work* 9
2.05 *Before Starting Construction* 9
2.06 *Preconstruction Conference* 9
2.07 *Initial Acceptance of Schedules* 9
ARTICLE 3 - CONTRACT DOCUMENTS: INTENT, AMENDING, REUSE 10
3.01 *Intent* 10
3.02 *Reference Standards* 10
3.03 *Reporting and Resolving Discrepancies* 10
3.04 *Amending and Supplementing Contract Documents* 11
3.05 *Reuse of Documents* 11
3.06 *Electronic Data* 11
ARTICLE 4 - AVAILABILITY OF LANDS; SUBSURFACE AND PHYSICAL CONDITIONS; HAZARDOUS ENVIRONMENTAL CONDITIONS; REFERENCE POINTS 11
4.01 *Availability of Lands* 11
4.02 *Subsurface and Physical Conditions* 12
4.03 *Differing Subsurface or Physical Conditions* 12
4.04 *Underground Facilities* 13
4.05 *Reference Points* 13
4.06 *Hazardous Environmental Condition at Site* 13
ARTICLE 5 - BONDS AND INSURANCE 14
5.01 *Performance, Payment, and Other Bonds* 14
5.02 *Licensed Sureties and Insurers* 15
5.03 *Certificates of Insurance* 15
5.04 *Contractor's Liability Insurance* 15
5.05 *Owner's Liability Insurance* 16
5.06 *Property Insurance* 16
5.07 *Waiver of Rights* 17
5.08 *Receipt and Application of Insurance Proceeds* 17
5.09 *Acceptance of Bonds and Insurance; Option to Replace* 17
5.10 *Partial Utilization, Acknowledgment of Property Insurer* 18
ARTICLE 6 - CONTRACTOR'S RESPONSIBILITIES 18
6.01 *Supervision and Superintendence* 18
6.02 *Labor; Working Hours* 18
6.03 *Services, Materials, and Equipment* 18
6.04 *Progress Schedule* 18
6.05 *Substitutes and "Or-Equals"* 19
6.06 *Concerning Subcontractors, Suppliers, and Others* 20
6.07 *Patent Fees and Royalties* 21
6.08 *Permits* 21
6.09 *Laws and Regulations* 21
6.10 *Taxes* 22
6.11 *Use of Site and Other Areas* 22
6.12 *Record Documents* 22
6.13 *Safety and Protection* 22
6.14 *Safety Representative* 23
6.15 *Hazard Communication Programs* 23
6.16 *Emergencies* 23
6.17 *Shop Drawings and Samples* 23

Copyright © 2002 National Society of Professional Engineers for EJCDC. All rights reserved.

6.18 *Continuing the Work* 24
6.19 *Contractor's General Warranty and Guarantee* 24
6.20 *Indemnification* 24
6.21 *Delegation of Professional Design Services* 25
ARTICLE 7 - OTHER WORK AT THE SITE 25
7.01 *Related Work at Site* 25
7.02 *Coordination* 26
7.03 *Legal Relationships* 26
ARTICLE 8 - OWNER'S RESPONSIBILITIES 26
8.01 *Communications to Contractor* 26
8.02 *Replacement of Engineer* 26
8.03 *Furnish Data* 26
8.04 *Pay When Due* 26
8.05 *Lands and Easements; Reports and Tests* 26
8.06 *Insurance* 26
8.07 *Change Orders* 26
8.08 *Inspections, Tests, and Approvals* 26
8.09 *Limitations on Owner's Responsibilities* 27
8.10 *Undisclosed Hazardous Environmental Condition* 27
8.11 *Evidence of Financial Arrangements* 27
ARTICLE 9 - ENGINEER'S STATUS DURING CONSTRUCTION 27
9.01 *Owner's Representative* 27
9.02 *Visits to Site* 27
9.03 *Project Representative* 27
9.04 *Authorized Variations in Work* 27
9.05 *Rejecting Defective Work* 27
9.06 *Shop Drawings, Change Orders and Payments* 28
9.07 *Determinations for Unit Price Work* 28
9.08 *Decisions on Requirements of Contract Documents and Acceptability of Work* 28
9.09 *Limitations on Engineer's Authority and Responsibilities* 28
ARTICLE 10 - CHANGES IN THE WORK; CLAIMS 28
10.01 *Authorized Changes in the Work* 28
10.02 *Unauthorized Changes in the Work* 29
10.03 *Execution of Change Orders* 29
10.04 *Notification to Surety* 29
10.05 *Claims* 29
ARTICLE 11 - COST OF THE WORK; ALLOWANCES; UNIT PRICE WORK 30
11.01 *Cost of the Work* 30
11.02 *Allowances* 31
11.03 *Unit Price Work* 31
ARTICLE 12 - CHANGE OF CONTRACT PRICE; CHANGE OF CONTRACT TIMES 32
12.01 *Change of Contract Price* 32
12.02 *Change of Contract Times* 33
12.03 *Delays* 33
ARTICLE 13 - TESTS AND INSPECTIONS; CORRECTION, REMOVAL OR ACCEPTANCE OF DEFECTIVE WORK 33
13.01 *Notice of Defects* 33
13.02 *Access to Work* 33
13.03 *Tests and Inspections* 33
13.04 *Uncovering Work* 34
13.05 *Owner May Stop the Work* 34
13.06 *Correction or Removal of Defective Work* 34
13.07 *Correction Period* 34
13.08 *Acceptance of Defective Work* 35
13.09 *Owner May Correct Defective Work* 35
ARTICLE 14 - PAYMENTS TO CONTRACTOR AND COMPLETION 36
14.01 *Schedule of Values* 36
14.02 *Progress Payments* 36
14.03 *Contractor's Warranty of Title* 37
14.04 *Substantial Completion* 37
14.05 *Partial Utilization* 38

Copyright © 2002 National Society of Professional Engineers for EJCDC. All rights reserved.

14.06 *Final Inspection* 38
14.07 *Final Payment* 38
14.08 *Final Completion Delayed* 39
14.09 *Waiver of Claims* 39
ARTICLE 15 - SUSPENSION OF WORK AND TERMINATION 39
15.01 *Owner May Suspend Work* 39
15.02 *Owner May Terminate for Cause* 39
15.03 *Owner May Terminate For Convenience* 40
15.04 *Contractor May Stop Work or Terminate* 40
ARTICLE 16 - DISPUTE RESOLUTION 41
16.01 *Methods and Procedures* 41
ARTICLE 17 - MISCELLANEOUS 41
17.01 *Giving Notice* 41
17.02 *Computation of Times* 41
17.03 *Cumulative Remedies* 41
17.04 *Survival of Obligations* 41
17.05 *Controlling Law* 41
17.06 *Headings* 41

Copyright © 2002 National Society of Professional Engineers for EJCDC. All rights reserved.

GENERAL CONDITIONS

ARTICLE 1 - DEFINITIONS AND TERMINOLOGY

1.01 *Defined Terms*

A. Wherever used in the Bidding Requirements or Contract Documents and printed with initial capital letters, the terms listed below will have the meanings indicated which are applicable to both the singular and plural thereof. In addition to terms specifically defined, terms with initial capital letters in the Contract Documents include references to identified articles and paragraphs, and the titles of other documents or forms.

1. *Addenda*--Written or graphic instruments issued prior to the opening of Bids which clarify, correct, or change the Bidding Requirements or the proposed Contract Documents. In case of inconsistency between the Contract Documents and any Addenda, the Addenda supersede other Contract Documents.

2. *Agreement*--The written instrument which is evidence of the agreement between Owner and Contractor covering the Work.

3. *Application for Payment*--The form acceptable to Engineer which is to be used by Contractor during the course of the Work in requesting progress or final payments and which is to be accompanied by such supporting documentation as is required by the Contract Documents.

4. *Asbestos*--Any material that contains more than one percent asbestos and is friable or is releasing asbestos fibers into the air above current action levels established by the United States Occupational Safety and Health Administration.

5. *Bid*--The offer or proposal of a Bidder submitted on the prescribed form setting forth the prices for the Work to be performed.

6. *Bidder*--The individual or entity who submits a Bid directly to Owner.

7. *Bidding Documents*--The Bidding Requirements and the proposed Contract Documents (including all Addenda).

8. *Bidding Requirements*--The Advertisement or Invitation to Bid, Instructions to Bidders, bid security of acceptable form, if any, and the Bid Form with any supplements.

9. *Change Order*--A document recommended by Engineer which is signed by Contractor and Owner and authorizes an addition, deletion, or revision in the Work or an adjustment in the Contract Price or the Contract Times, issued on or after the Effective Date of the Agreement. Extra Work will not be considered for a Change Order or for an adjustment in the Contract Price or the Contract Times unless the document is executed by both Owner and Contractor. Furthermore, the parties agree that under no circumstances will an act or failure to act on the part of the Owner or the Engineer constitute a waiver of the written Change Order requirement for extra work. A written Change Order is a strict condition precedent for payment of extra work.

10. *Claim*--A demand or assertion by Owner or Contractor seeking an adjustment of Contract Price or Contract Times, or both, or other relief with respect to the terms of the Contract. A demand for money or services by a third party is not a Claim.

11. *Contract*--The entire and integrated written agreement between the Owner and Contractor concerning the Work. The Contract supersedes prior negotiations, representations, or agreements, whether written or oral including, without limitation, all prior iterations of these General Conditions, the Supplementary Conditions, or any other document not specifically listed in the Agreement.

12. *Contract Documents*-- The Contract Documents consist of the Agreement between Owner and Contractor, Conditions of the Contract (General, Supplementary and other Conditions), Drawings, Specifications, Addenda issued prior to execution of the Contract, other documents listed in the Agreement and Modifications issued after execution of the Contract. A Modification is (1) a written amendment to the Contract signed by both parties, (2) a Change Order, (3) a Work Change Directive or (4) a Field Order. Unless specifically enumerated in the Agreement, the Contract Documents do not include other documents such as bidding requirements (advertisement or Invitation to Bid, Instructions to Bidders, sample forms, the Contractor's Bid, portions of Addenda relating to bidding requirements), Approved Shop Drawings, other Contractor submittals, and the reports and drawings of subsurface and physical conditions.

13. *Contract Price*--The moneys payable by Owner to Contractor for completion of the Work in accordance with the Contract Documents as stated in the Agreement (subject to the provisions of Paragraph 11.03 in the case of Unit Price Work).

14. *Contract Times*--The number of days or the dates stated in the Agreement to: (i) achieve Milestones, if any, (ii) achieve Substantial Completion; and (iii) complete the Work so that it is ready for final payment as evidenced by Engineer's written recommendation of final payment.

Copyright © 2002 National Society of Professional Engineers for EJCDC. All rights reserved.

15. *Contractor*--The individual or entity with whom Owner has entered into the Agreement. For purposes of giving or receiving notice, directives, change orders, or any other information from the Engineer or Owner to the Contractor, the Contractor shall designate one person as Project Manager to receive such notice, directives, change orders, or other information. If the person so identified by the Contractor is not present on the job site during normal working hours for any consecutive 48-hour period, the Contractor shall in writing addressed to the Engineer and Owner identify the individual who is acting as Project Manager.

16. *Cost of the Work*--See Paragraph 11.01.A for definition.

17. *Drawings*--That part of the Contract Documents prepared or approved by Engineer which graphically shows the scope, extent, and character of the Work to be performed by Contractor. Shop Drawings and other Contractor submittals are not Drawings as so defined.

18. *Effective Date of the Agreement*--The date indicated in the Agreement on which it becomes effective, but if no such date is indicated, it means the date on which the Agreement is signed and delivered by the last of the two parties to sign and deliver. However, Contractor has no rights or remedies arising from execution of the Agreement prior to receiving a Notice to Proceed from Owner or Engineer.

19. *Engineer*--The individual or entity named as such in the Agreement. The Engineer shall identify a specific individual to serve as liaison between the Owner and Contractor and between Engineer and Contractor. The Engineer will notify the Owner and Contractor of the name of an acting replacement as Engineer representative whenever the person so designated is not available. Whenever the Contractor or Owner requires information, direction, or assistance, the Contractor or Owner shall notify the individual designated by the Engineer.

20. *Field Order*--A written order issued by Engineer which requires minor changes in the Work but which does not involve a change in the Contract Price or the Contract Times. The Engineer will promptly obtain the signature of the Contractor on all Field Orders. This signature confirms that the Contractor is not entitled to any change in the Contract Price or the Contract Times. The Engineer will endeavor to obtain the signature of the Contractor on all Field Orders on a weekly basis.

21. *General Requirements*--Sections of Division 1 of the Specifications. The General Requirements pertain to all sections of the Specifications.

22. *Hazardous Environmental Condition*--The presence at the Site of Asbestos, PCBs, Petroleum, Hazardous Waste, or Radioactive Material in such quantities or circumstances that may present a substantial danger to persons or property exposed thereto in connection with the Work.

23. *Hazardous Waste*--The term Hazardous Waste shall have the meaning provided in Section 1004 of the Solid Waste Disposal Act (42 USC Section 6903) as amended from time to time.

24. *Laws and Regulations; Laws or Regulations*--Any and all applicable laws, rules, regulations, ordinances, codes, and orders of any and all governmental bodies, agencies, authorities, and courts having jurisdiction.

25. *Liens*--Charges, security interests, or encumbrances upon Project funds, real property, or personal property.

26. *Milestone*--A principal event specified in the Contract Documents relating to an intermediate completion date or time prior to Substantial Completion of all the Work.

27. *Notice of Award*--The written notice by Owner to the Successful Bidder stating that upon timely compliance by the Successful Bidder with the conditions precedent listed therein, Owner, if the Owner decides to proceed with the Work, will sign and deliver the Agreement, to the apparent successful bidder. However, the Notice of Award shall not be construed as an agreement, meeting of the minds, contract, or any other legal obligation between Owner and Contractor. Until Contractor receives a Notice to Proceed from the Owner, the Contractor has no remedy against the Owner.

28. *Notice to Proceed*--A written notice given by Owner to Contractor fixing the date on which the Contract Times will commence to run and on which Contractor shall start to perform the Work under the Contract Documents.

29. *Owner*--The individual or entity with whom Contractor has entered into the Agreement and for whom the Work is to be performed. As a general matter, the Contractor should utilize the Engineer's designated representative as the liaison between the Contractor and the Owner. However, in an exceptional circumstance, the Contractor can notify Owner's designated representative.

30. *PCBs*--Polychlorinated biphenyls.

31. *Petroleum*--Petroleum, including crude oil or any fraction thereof which is liquid at standard conditions of temperature and pressure (60 degrees Fahrenheit and 14.7 pounds per square inch absolute), such as oil, petroleum, fuel oil, oil sludge, oil refuse, gasoline, kerosene, and oil mixed with other non-Hazardous Waste and crude oils.

Copyright © 2002 National Society of Professional Engineers for EJCDC. All rights reserved.

32. *Progress Schedule*--A schedule, prepared and maintained by Contractor, describing the sequence and duration of the activities comprising the Contractor's plan to accomplish the Work within the Contract Times.

33. *Project*--The total construction of which the Work to be performed under the Contract Documents may be the whole, or a part.

34. *Project Manual*--The bound documentary information prepared for bidding and constructing the Work. A listing of the contents of the Project Manual, which may be bound in one or more volumes, is contained in the table(s) of contents.

35. *Radioactive Material*--Source, special nuclear, or byproduct material as defined by the Atomic Energy Act of 1954 (42 USC Section 2011 et seq.) as amended from time to time.

36. *Related Entity* -- An officer, director, partner, employee, agent, consultant, or subcontractor.

37. *Resident Project Representative*--The authorized representative of Engineer who may be assigned to the Site or any part thereof.

38. *Samples*--Physical examples of materials, equipment, or workmanship that are representative of some portion of the Work and which establish the standards by which such portion of the Work will be judged.

39. *Schedule of Submittals*--A schedule, prepared and maintained by Contractor, of required submittals and the time requirements to support scheduled performance of related construction activities.

40. *Schedule of Values*--A schedule, prepared and maintained by Contractor, allocating portions of the Contract Price to various portions of the Work and used as the basis for reviewing Contractor's Applications for Payment.

41. *Shop Drawings*--All drawings, diagrams, illustrations, schedules, and other data or information which are specifically prepared or assembled by or for Contractor and submitted by Contractor to illustrate some portion of the Work.

42. *Site*--Lands or areas indicated in the Contract Documents as being furnished by Owner upon which the Work is to be performed, including rights-of-way and easements for access thereto, and such other lands furnished by Owner which are designated for the use of Contractor.

43. *Specifications*--That part of the Contract Documents consisting of written requirements for materials, equipment, systems, standards and workmanship as applied to the Work, and certain administrative requirements and procedural matters applicable thereto.

44. *Subcontractor*--An individual or entity having a direct contract with Contractor or with any other Subcontractor for the performance of a part of the Work at the Site.

45. *Substantial Completion*--The time at which the Work (or a specified part thereof) has progressed to the point where, in the opinion of Owner, the Work (or a specified part thereof) is sufficiently complete, in accordance with the Contract Documents, so that the Work (or a specified part thereof) can be utilized for the purposes for which it is intended. The terms "substantially complete" and "substantially completed" as applied to all or part of the Work refer to Substantial Completion thereof.

46. *Successful Bidder*--The Bidder submitting a responsive Bid to whom Owner makes an award.

47. *Supplementary Conditions*--That part of the Contract Documents which amends or supplements these General Conditions.

48. *Supplier*--A manufacturer, fabricator, supplier, distributor, materialman, or vendor having a direct contract with Contractor or with any Subcontractor to furnish materials or equipment to be incorporated in the Work by Contractor or any Subcontractor.

49. *Underground Facilities*--All underground pipelines, conduits, ducts, cables, wires, manholes, vaults, tanks, tunnels, or other such facilities or attachments, and any encasements containing such facilities, including those that convey electricity, gases, steam, liquid petroleum products, telephone or other communications, cable television, water, wastewater, storm water, other liquids or chemicals, or traffic or other control systems.

50. *Unit Price Work*--Work to be paid for on the basis of unit prices.

51. *Work*--The entire construction or the various separately identifiable parts thereof required to be provided under the Contract Documents. Work includes and is the result of performing or providing all labor, services, and documentation necessary to produce such construction, and furnishing, installing, and incorporating all materials and equipment into such construction, all as required by the Contract Documents.

52. *Work Change Directive*--A written statement to Contractor issued on or after the Effective Date of the Agreement and signed by Owner and recommended by Engineer ordering an addition, deletion, or revision in the Work, or responding to differing or unforeseen subsurface or physical conditions under which the Work is to be

Copyright © 2002 National Society of Professional Engineers for EJCDC. All rights reserved.

performed or to emergencies. A Work Change Directive will not change the Contract Price or the Contract Times but is evidence that the parties expect that the change ordered or documented by a Work Change Directive will be incorporated in a subsequently issued Change Order following negotiations by the parties as to its effect, if any, on the Contract Price or Contract Times.

1.02 *Terminology*

A. The following words or terms are not defined but, when used in the Bidding Requirements or Contract Documents, have the following meaning.

B. *Intent of Certain Terms or Adjectives*

1. The Contract Documents include the terms "as allowed," "as approved," "as ordered", "as directed" or terms of like effect or import to authorize an exercise of professional judgment by Engineer. In addition, the adjectives "reasonable," "suitable," "acceptable," "proper," "satisfactory," or adjectives of like effect or import are used to describe an action or determination of Engineer as to the Work. It is intended that such exercise of professional judgment, action or determination will be solely to evaluate, in general, the Work for compliance with the requirements of and information in the Contract Documents and conformance with the design concept of the completed Project as a functioning whole as shown or indicated in the Contract Documents (unless there is a specific statement indicating otherwise). The use of any such term or adjective is not intended to and shall not be effective to assign to Engineer any duty or authority to supervise or direct the performance of the Work or any duty or authority to undertake responsibility contrary to the provisions of Paragraph 9.09 or any other provision of the Contract Documents.

C. *Day*

1. The word "day" means a calendar day of 24 hours measured from midnight to the next midnight.

D. *Defective*

1. The word "defective," when modifying the word "Work," refers to Work that is unsatisfactory, faulty, or deficient in that it:

a. does not conform to the Contract Documents, or

b. does not meet the requirements of any applicable inspection, reference standard, test, or approval referred to in the Contract Documents, or

c. has been damaged prior to Engineer's - recommendation of final payment (unless responsibility for the protection thereof has been assumed by Owner at Substantial Completion in accordance with Paragraph 14.04 or 14.05).

E. *Furnish, Install, Perform, Provide*

1. The word "furnish," when used in connection with services, materials, or equipment, shall mean to supply and deliver said services, materials, or equipment to the Site (or some other specified location) ready for use or installation and in usable or operable condition.

2. The word "install," when used in connection with services, materials, or equipment, shall mean to put into use or place in final position said services, materials, or equipment complete and ready for intended use.

3. The words "perform" or "provide," when used in connection with services, materials, or equipment, shall mean to furnish and install said services, materials, or equipment complete and ready for intended use.

4. When "furnish," "install," "perform," or "provide" is not used in connection with services, materials, or equipment in a context clearly requiring an obligation of Contractor, "provide" is implied.

F. Unless stated otherwise in the Contract Documents, words or phrases which have a well-known technical or construction industry or trade meaning are used in the Contract Documents in accordance with such recognized meaning.

ARTICLE 2 - PRELIMINARY MATTERS

2.01 *Delivery of Bonds and Evidence of Insurance*

A. When Contractor delivers the executed counterparts of the Agreement to Owner, Contractor shall also deliver to Owner such bonds as Contractor may be required to furnish.

B. *Evidence of Insurance:* Before any Work at the Site is started, Contractor shall each deliver to Owner, with copies to each additional insured identified in the Supplementary Conditions, certificates of insurance (and other evidence of insurance which Owner or any additional insured may reasonably request) which Contractor is required to purchase and maintain in accordance with Article 5.

2.02 *Copies of Documents*

A. Owner shall furnish to Contractor up to four (4) printed or hard copies of the Drawings and Project Manual. Additional copies will be furnished upon request at the cost of reproduction.

2.03 *Commencement of Contract Times; Notice to*

Copyright © 2002 National Society of Professional Engineers for EJCDC. All rights reserved.

Proceed

A. TIME IS OF THE ESSENCE OF THIS CONTRACT. This is a Calendar Day Contract. The Contract Times will commence to run on the day indicated in the Notice to Proceed. The Owner will provide a Notice to Proceed at a reasonable time after the effective date of the Agreement. In no event will the Owner have any obligations or duties to the Contractor under the Agreement until the Notice to Proceed is given to the Contractor.

2.04 *Starting the Work*

A. Contractor shall start to perform the Work on the date when the Contract Times commence to run as set forth in the Notice to Proceed. No Work shall be done at the Site prior to the date on which the Contract Times commence to run.

2.05 *Before Starting Construction*

A. *Preliminary Schedules:* Within 10 days after the Effective Date of the Agreement (unless otherwise specified in the General Requirements), Contractor shall submit to Owner and Engineer for timely review**:**

1. a preliminary Progress Schedule; indicating the times (numbers of days or dates) for starting and completing the various stages of the Work, including any Milestones specified in the Contract Documents;

2. a preliminary Schedule of Submittals; and

3. a preliminary Schedule of Values for all of the Work which includes quantities and prices of items which when added together equal the Contract Price and subdivides the Work into component parts in sufficient detail to serve as the basis for progress payments during performance of the Work. Such prices will include an appropriate amount of overhead and profit applicable to each item of Work.

2.06 *Preconstruction Conference*

A. Before any Work at the Site is started, a conference attended by Owner, Contractor, Engineer, and others as appropriate will be held to establish a working understanding among the parties as to the Work and to discuss the schedules referred to in Paragraph 2.05.A, procedures for handling Shop Drawings and other submittals, processing Applications for Payment, and maintaining required records.

2.07 *Initial Acceptance of Schedules*

A. At least 10 days before submission of the first Application for Payment a conference attended by Contractor, Engineer, and others as appropriate will be held to review for acceptability to Engineer as provided below the schedules submitted in accordance with Paragraph 2.05.A. Contractor shall have an additional 10 days to make corrections and adjustments and to complete and resubmit the schedules. No progress payment shall be made to Contractor until acceptable schedules are submitted to Engineer.

1. The Progress Schedule shall not exceed time limits current under the Contract Documents, shall be revised at appropriate intervals as required by the conditions of the Work and Project, shall be related to the entire Project to the extent required by the Contract Documents, and shall provide for expeditious, economical, and practicable execution of the Work. The Contractor shall perform all Work in accordance with the most recent Progress Schedule submitted to the Owner and Engineer. Nothing contained herein will impose on Owner or Engineer responsibility for the Progress Schedule, for sequencing, scheduling, or progress of the Work nor interfere with or relieve Contractor from Contractor's full responsibility therefor.

a. The Progress Schedule shall be in a detailed precedence-style critical path method ("CPM") or primavera-type format satisfactory to the Owner. The Progress Schedule shall also (i) provide a graphic representation of all activities and events that will occur during performance of the Work; (ii) identify each phase of construction and occupancy; and (iii) set forth dates that are critical in ensuring the timely and orderly completion of the Work in accordance with the requirements of the Contract Documents (hereinafter referred to as "Milestone Dates"). Upon review and acceptance by the Owner of the Milestone Dates, the Progress Schedule shall be deemed part of the Contract Documents. If not accepted, the Progress Schedule shall be promptly revised by Contractor in accordance with the recommendations of the Owner and resubmitted for acceptance. The Contractor shall monitor the progress of the Work for conformance with the requirements of the Progress Schedule and shall promptly advise the Owner of any delays or potential delays. The accepted Progress Schedule shall be updated to reflect the actual conditions as set forth in Paragraph 2.6.1 or if requested by either the Owner or the Engineer.

b. The parties acknowledge and agree that notwithstanding any theoretical delays or theoretical extensions of time for completion as may be shown on the Progress Schedule, the Interim Completion Dates, Milestone Dates, and the Scheduled Completion Date shall be governed by the Contract and shall be extended only in accordance with the procedures set forth in the Contract Documents.

c. In the event that the Owner or Engineer determines that the Work has not progressed or reached the level of completion required by the Contract Documents, the Owner shall have the right to order the Contractor to take corrective measures necessary to

Copyright © 2002 National Society of Professional Engineers for EJCDC. All rights reserved.

expedite the progress of construction, including, without limitation, (i) working additional shifts or overtime, (ii) supplying additional manpower, equipment, and facilities, and (iii) other similar measures. Contractor agrees to take such corrective measures to expedite the progress of construction until the progress of the Work complies with the state of completion required by the Contract Documents.

d. In the event Owner or Engineer determines that Contractor is not timely performing any of its Work or that Contractor is not keeping up with the Progress Schedule, Owner may, in addition to Owner's rights stated herein, request Contractor to prepare a Recovery Schedule. In such event, Contractor will prepare a Recovery Schedule in such form and in such detail as Owner may request. Contractor further agrees that it will work as necessary to meet the requirements of the Recovery Schedule and bring its Work into compliance with the current Progress Schedule (all without any additional cost to Owner). No approval by Owner or Engineer of Contractor's Recovery Schedule pursuant to this Paragraph shall constitute a waiver by Owner of any damages or losses which Owner may suffer as a result of Contractor's failure to meet the Scheduled Completion Date.

2. Contractor's Schedule of Submittals will be acceptable to Owner and Engineer if it provides a workable arrangement for reviewing and processing the required submittals.

3. Contractor's Schedule of Values will be acceptable to Owner and Engineer as to form and substance if it provides a reasonable allocation of the Contract Price to component parts of the Work.

4. If required by Owner, Contractor shall also prepare and furnish project cash flow projections, manning charts for all key trades, and schedules for the purchase and delivery of all equipment and materials, together with the periodic updating thereof.

ARTICLE 3 - CONTRACT DOCUMENTS: INTENT, AMENDING, REUSE

3.01 *Intent*

A. The Contract Documents are complementary; what is required by one is as binding as if required by all.

B. It is the intent of the Contract Documents to describe a functionally complete Project (or part thereof) to be constructed in accordance with the Contract Documents. Any labor, documentation, services, materials, or equipment that may reasonably be inferred from the Contract Documents or from prevailing custom or trade usage as being required to produce the intended result will be provided whether or not specifically called for at no additional cost to Owner.

C. Clarifications and interpretations of the Contract Documents shall be issued by Engineer as provided in Article 9.

D. In the event of inconsistencies within or between the parts of the Contract Documents, or between the Contract Documents and applicable standards, codes, or ordinances, the Contractor shall (i) provide the better quality or greater quantity of Work or (ii) comply with the more stringent requirement; either or both in accordance with the Engineer's interpretation.

3.02 *Reference Standards*

A. Standards, Specifications, Codes, Laws, and Regulations

1. Reference to standards, specifications, manuals, or codes of any technical society, organization, or association, or to Laws or Regulations, whether such reference be specific or by implication, shall mean the standard, specification, manual, code, or Laws or Regulations in effect at the time of opening of Bids (or on the Effective Date of the Agreement if there were no Bids), except as may be otherwise specifically stated in the Contract Documents.

2. No provision of any such standard, specification, manual or code, or any instruction of a Supplier shall be effective to change the duties or responsibilities of Owner, Contractor, or Engineer, or any of their subcontractors, consultants, agents, or employees from those set forth in the Contract Documents. No such provision or instruction shall be effective to assign to Owner, or Engineer, or any of, their Related Entities, any duty or authority to supervise or direct the performance of the Work or any duty or authority to undertake responsibility inconsistent with the provisions of the Contract Documents.

3.03 *Reporting and Resolving Discrepancies*

A. Reporting Discrepancies

1. *Contractor's Review of Contract Documents Before Starting Work*: Before undertaking each part of the Work, Contractor shall carefully study and compare the Contract Documents and check and verify pertinent figures therein and all applicable field measurements. Contractor shall promptly report in writing to Owner and Engineer any conflict, error, ambiguity, or discrepancy which Contractor may discover in the Contract Documents, or any condition at the site affecting the Work, and shall obtain a written interpretation or clarification from Owner and Engineer before proceeding with any Work affected thereby. The Contractor shall be liable to the Owner for failure to report any conflict, error,

Copyright © 2002 National Society of Professional Engineers for EJCDC. All rights reserved.

ambiguity or discrepancy in the Contract Documents which the Contractor knew or reasonably should have known.

2. *Contractor's Review of Contract Documents During Performance of Work*: If, during the performance of the Work, Contractor discovers any conflict, error, ambiguity, or discrepancy within the Contract Documents or between the Contract Documents and any provision of any Law or Regulation applicable to the performance of the Work or of any standard, specification, manual or code, or of any instruction of any Supplier, Contractor shall promptly report it to Owner and Engineer in writing. Contractor shall not proceed with the Work affected thereby (except in an emergency as required by Paragraph 6.16.A) until an amendment or supplement to the Contract Documents has been issued by one of the methods indicated in Paragraph 3.04.

3. Contractor shall not be liable to Owner or Engineer for failure to report any conflict, error, ambiguity, or discrepancy in the Contract Documents unless Contractor knew or reasonably should have known thereof.

4. The terms "knowledge," "recognize," and "discover," their respective derivatives, and similar terms in the Contract Documents, as used in reference to the Contractor, shall be interpreted to mean that which the Contractor knows (or should know), recognizes (or should recognize), and discovers (or should discover) in exercising the care, skill, and diligence required by the Contract Documents. Analogously, the expression "reasonably inferable" and similar terms in the Contract Documents shall be interpreted to mean reasonably inferable by a contractor familiar with the Project and exercising the care, skill, and diligence required of the Contractor by the Contract Documents.

B. Resolving Discrepancies

1. Except as may be otherwise specifically stated in the Contract Documents, the provisions of the Contract Documents shall take precedence in resolving any conflict, error, ambiguity, or discrepancy between the provisions of the Contract Documents and:

a. the provisions of any standard, specification, manual, code, or instruction (whether or not specifically incorporated by reference in the Contract Documents); or

b. the provisions of any Laws or Regulations applicable to the performance of the Work (unless such an interpretation of the provisions of the Contract Documents would result in violation of such Law or Regulation).

3.04 *Amending and Supplementing Contract Documents*

A. The Contract Documents may be amended to provide for additions, deletions, and revisions in the Work or to modify the terms and conditions thereof by either a Change Order or a Work Change Directive.

B. The requirements of the Contract Documents may be supplemented, and minor variations and deviations in the Work can only be authorized, by one or more of the following ways:

1. A Field Order;

2. Engineer's approval of a Shop Drawing or Sample; (Subject to the provisions of Paragraph 6.17.D.3); or

3. Engineer's written interpretation or clarification.

Any variations and deviations in the Work arising from any of the methods set forth in Paragraph 3.04.B will not authorize any Amendments to the Contract Price or Contract Times. The sole method to amend the Contract Price or Contract Times is pursuant to Paragraph 3.04.A.

3.05 *Reuse of Documents*

A. Contractor and any Subcontractor or Supplier or other individual or entity performing or furnishing all of the Work under a direct or indirect contract with Contractor, shall not:

1. have or acquire any title to or ownership rights in any of the Drawings, Specifications, or other documents (or copies of any thereof) prepared by or bearing the seal of Engineer or Engineer's consultants, including electronic media editions; or

2. reuse any of such Drawings, Specifications, other documents, or copies thereof on extensions of the Project or any other project without written consent of Owner and Engineer and specific written verification or adaption by Engineer.

B. The prohibition of this Paragraph 3.05 will survive final payment, or termination of the Contract. Nothing herein shall preclude Contractor from retaining copies of the Contract Documents for record purposes.

3.06 *Electronic Data*

A. Copies of data furnished by Owner or Engineer to Contractor or Contractor to Owner or Engineer that may be relied upon are limited to the printed copies (also known as hard copies). Files in electronic media format of text, data, graphics, or other types are furnished only for the convenience of the receiving party. Any conclusion or information obtained or derived from such electronic files will be at the user's

Copyright © 2002 National Society of Professional Engineers for EJCDC. All rights reserved.

sole risk. If there is a discrepancy between the electronic files and the hard copies, the hard copies govern.

B. Because data stored in electronic media format can deteriorate or be modified inadvertently or otherwise without authorization of the data's creator, the party receiving electronic files agrees that it will perform acceptance tests or procedures within 60 days, after which the receiving party shall be deemed to have accepted the data thus transferred. Any errors detected within the 60-day acceptance period will be corrected by the transferring party.

C. When transferring documents in electronic media format, the transferring party makes no representations as to long term compatibility, usability, or readability of documents resulting from the use of software application packages, operating systems, or computer hardware differing from those used by the data's creator.

ARTICLE 4 - AVAILABILITY OF LANDS; SUBSURFACE AND PHYSICAL CONDITIONS; HAZARDOUS ENVIRONMENTAL CONDITIONS; REFERENCE POINTS

4.01 *Availability of Lands*

A. Owner shall furnish the Site. Owner shall notify Contractor of any encumbrances or restrictions not of general application but specifically related to use of the Site with which Contractor must comply in performing the Work. Owner will obtain in a timely manner and pay for easements for permanent structures or permanent changes in existing facilities. If Contractor and Owner are unable to agree on entitlement to or on the amount or extent, if any, of any adjustment in the Contract Price or Contract Times, or both, as a result of any delay in Owner's furnishing the Site or a part thereof, Contractor may make a Claim therefor as provided in Paragraph 10.05.

B. Upon reasonable written request, Owner shall furnish Contractor with a current statement of record legal title and legal description of the lands upon which the Work is to be performed and Owner's interest therein as necessary for giving notice of or filing a mechanic's or construction lien against such lands in accordance with applicable Laws and Regulations.

C. Contractor shall provide for all additional lands and access thereto that may be required for temporary construction facilities or storage of materials and equipment.

4.02 *Subsurface and Physical Conditions*

A. *Reports and Drawings:* The Supplementary Conditions identify:

1. those reports of explorations and tests of subsurface conditions at or contiguous to the Site that Engineer has used in preparing the Contract Documents; and

2. those drawings of physical conditions in or relating to existing surface or subsurface structures at or contiguous to the Site (except Underground Facilities) that Engineer has used in preparing the Contract Documents.

B. *Limited Reliance by Contractor on Technical Data Authorized:* Contractor may rely upon the general accuracy of the "technical data" contained in such reports and drawings, but such reports and drawings are not Contract Documents. Such "technical data" is identified in the Supplementary Conditions. Except for such reliance on such "technical data," Contractor may not rely upon or make any claim against Owner or Engineer, or any of their Related Entities with respect to:

1. the completeness of such reports and drawings for Contractor's purposes, including, but not limited to, any aspects of the means, methods, techniques, sequences, and procedures of construction to be employed by Contractor, and safety precautions and programs incident thereto; or

2. other data, interpretations, opinions, and information contained in such reports or shown or indicated in such drawings; or

3. any Contractor interpretation of or conclusion drawn from any "technical data" or any such other data, interpretations, opinions, or information.

4.03 *Differing Subsurface or Physical Conditions*

A. The Contractor hereby covenants that it has examined the site of the proposed Work and is familiar with all of the conditions surrounding construction of the Project, having conducted all inquiries, tests and investigations for the Work.

1. The Contractor acknowledges that he has satisfied himself as to the nature and location of the Work; the general and local conditions, particularly those bearing upon availability of transportation, disposal, handling and storage of materials, availability of labor, water, electric power, roads, and uncertainties of weather, river/stream stages, or similar physical conditions at the site; the conformation and conditions of the ground; the character of equipment and facilities needed preliminary to and during the prosecution of the Work and all other

Copyright © 2002 National Society of Professional Engineers for EJCDC. All rights reserved.

matters which can in any way affect the work or the cost thereof under this Contract.

2. The Contractor further acknowledges that he has satisfied himself as to the character, quality, and quantity of surface and subsurface materials to be encountered from inspecting the Site and from evaluating information derived from exploratory work, if any, that has been presented in any geotechnical report, as well as from information presented in the Supplementary Conditions. Any failure by the Contractor to acquaint himself with all the available information will not relieve him from responsibility for properly estimating the difficulty or cost of successfully performing the Work. Neither the Owner nor the Engineer assume responsibility for any conclusion or interpretation made by the Contractor on the basis of the information made available by the Owner or the Engineer. All risks of differing site conditions shall be borne solely by the Contractor.

4.04 *Underground Facilities*

A. *Shown or Indicated:* The information and data shown or indicated in the Contract Documents with respect to existing Underground Facilities at or contiguous to the Site is based on information and data furnished to Owner or Engineer by the owners of such Underground Facilities, including Owner, or by others. Unless it is otherwise expressly provided in the Supplementary Conditions:

1. Owner and Engineer shall not be responsible for the accuracy or completeness of any such information or data; and

2. the cost of all of the following will be included in the Contract Price, and Contractor shall have full responsibility for:

a. reviewing and checking all such information and data,

b. locating all Underground Facilities shown or indicated in the Contract Documents and notifying Texas One Call Service,

c. coordination of the Work with the owners of such Underground Facilities, including Owner, during construction, and

d. the safety and protection of all such Underground Facilities and repairing any damage thereto resulting from the Work.

3. Notwithstanding any other provision to the contrary, the Contractor shall be solely responsible for the location and protection of any and all public lines and utility customer service lines in the Work area. For the purposes of this section, "public lines" means the utility distribution and supply system within public rights-of-way or easements, and "utility customer service lines" (service) means any utility line connecting a utility customer to the utility distribution system. Generally, existing service connections within right-of-way or easements are not shown on the Drawings. The Contractor shall notify the Owner and "Texas One Call Service" and exercise due care to locate and to mark, uncover or otherwise protect all such lines in the construction zone and any of the Contractor's work or storage areas. The Contractor's obligation hereunder shall be primary and non-delegable. **The Contractor shall indemnify or reimburse such expenses or costs (including fines that may be levied against the Owner) that may result from unauthorized or accidental damage to all public lines and utility customer service lines in the Work area.** The Owner reserves the right to repair such damage the Contractor may cause, at the Contractor's expense.

B. *Not Shown or Indicated*

1. If an Underground Facility is uncovered or revealed at or contiguous to the Site which was not shown or indicated, or not shown or indicated with reasonable accuracy in the Contract Documents, Contractor shall, within 24 hours after the Contractor discovers and before further disturbing conditions affected thereby or performing any Work in connection therewith (except in an emergency as required by Paragraph 6.16.A), identify the owner of such Underground Facility and give written notice to that owner and to Owner and Engineer.

C. The Contractor shall take reasonable precaution to avoid disturbing primitive records and antiquities of archaeological, paleontological or historical significance. No objects of this nature shall be disturbed without written permission of the Owner and the Texas Department of Antiquities Protection. When such objects are uncovered unexpectedly, the Contractor shall stop all Work in close proximity and notify Owner's Representative and the Texas Department of Antiquities Protection of their presence and shall not disturb them until written permission and permit to do so is granted. All primitive rights and antiquities uncovered on the Owner's property shall remain property of the State of Texas, the Texas Department of Antiquities Protection conforming to the Texas Natural Resources Code. If it is determined by the Owner, in consultation with the Texas Department of Antiquities Protection, that exploration or excavation of primitive records or antiquities on Project site is necessary to avoid loss, the Contractor shall cooperate in salvage work attendant to preservation. If the Work stoppage or salvage work causes an increase in the Contractor's cost of, or time required for, performance of the Work, the Contract Amount and/or Contract Time may be equitably adjusted.

Copyright © 2002 National Society of Professional Engineers for EJCDC. All rights reserved.

4.05 *Reference Points*

A. Engineer shall provide engineering surveys to establish reference points for construction which in Engineer's judgment are necessary to enable Contractor to proceed with the Work. Contractor shall be responsible for laying out the Work, shall protect and preserve the established reference points and property monuments, and shall make no changes or relocations without the prior written approval of Owner. Contractor shall report to Engineer whenever any reference point or property monument is lost or destroyed or requires relocation because of necessary changes in grades or locations, and shall be responsible for the accurate replacement or relocation of such reference points or property monuments by a Registered Professional Land Surveyor at Contractor's expense.

4.06 *Hazardous Environmental Condition at Site*

A. *Reports and Drawings:* Reference is made to the Supplementary Conditions for the identification of those reports and drawings relating to a Hazardous Environmental Condition identified at the Site, if any, that have been utilized by the Engineer in the preparation of the Contract Documents.

B. *Limited Reliance by Contractor on Technical Data Authorized:* Contractor may rely upon the general accuracy of the "technical data" contained in such reports and drawings, but such reports and drawings are not Contract Documents. Such "technical data" is identified in the Supplementary Conditions. Except for such reliance on such "technical data," Contractor may not rely upon or make any claim against Owner or Engineer, or any of their Related Entities with respect to:

1. the completeness of such reports and drawings for Contractor's purposes, including, but not limited to, any aspects of the means, methods, techniques, sequences and procedures of construction to be employed by Contractor and safety precautions and programs incident thereto; or

2. other data, interpretations, opinions and information contained in such reports or shown or indicated in such drawings; or

3. any Contractor interpretation of or conclusion drawn from any "technical data" or any such other data, interpretations, opinions or information.

C. The Contractor must take all precautions to discovery and locate any Hazardous Environmental Condition(s) at the site that may present a substantial danger to persons or property exposed thereto in connection with the Work at the site. The Contractor is responsible for any damages caused by such Hazardous Environmental Condition(s) created on the site by a Contractor, Subcontractor, Supplier, or anyone else for whom the Contractor is responsible. Within 24 hours of the time when the Contractor discovers the Hazardous Environmental Condition(s), the Contractor will follow the procedures set forth in Paragraph 4.06.D.

D. If Contractor encounters a Hazardous Environmental Condition or if Contractor or anyone for whom Contractor is responsible creates a Hazardous Environmental Condition, Contractor shall immediately: (i) secure or otherwise isolate such condition; (ii) stop all Work in connection with such condition and in any area affected thereby (except in an emergency as required by Paragraph 6.16.A); and (iii) notify Owner and Engineer (and promptly thereafter confirm such notice in writing). Owner shall promptly consult with Engineer concerning the necessity for Owner to retain a qualified expert to evaluate such condition or take corrective action, if any.

E. Contractor shall not be required to resume Work in connection with such condition or in any affected area until after Owner has obtained any required permits related thereto and delivered to Contractor written notice: (i) specifying that such condition and any affected area is or has been rendered safe for the resumption of Work; or (ii) specifying any special conditions under which such Work may be resumed safely. If Owner and Contractor cannot agree as to entitlement to or on the amount or extent, if any, of any adjustment in Contract Price or Contract Times, or both, as a result of such Work stop-page or such special conditions under which Work is agreed to be resumed by Contractor, either party may make a Claim therefor as provided in Paragraph 10.05.

F. If after receipt of such written notice Contractor does not agree to resume such Work based on a reasonable belief it is unsafe, or does not agree to resume such Work under such special conditions, then Owner may order the portion of the Work that is in the area affected by such condition to be deleted from the Work. If Owner and Contractor cannot agree as to entitlement to or on the amount or extent, if any, of an adjustment in Contract Price or Contract Times as a result of deleting such portion of the Work, then either party may make a Claim therefor as provided in Paragraph 10.05. Owner may have such deleted portion of the Work performed by Owner's own forces or others in accordance with Article 7.

H. To the fullest extent permitted by Laws and Regulations, Contractor shall indemnify and hold harmless Owner and Engineer, and the officers, directors, partners, employees, agents, consultants, and subcontractors of each and any of them from and against all claims, costs, losses, and damages (including but not limited to all fees and charges of engineers, architects, attorneys, and other professionals and all court or arbitration or other dispute resolution costs) arising out of or relating to a Hazardous Environmental Condition created by Contractor or by anyone for whom Contractor

Copyright © 2002 National Society of Professional Engineers for EJCDC. All rights reserved.

is responsible. Nothing in this Paragraph 4.06.H shall obligate Contractor to indemnify any individual or entity from and against the consequences of that individual's or entity's own negligence.

I. The provisions of Paragraphs 4.02, 4.03, and 4.04 do not apply to a Hazardous Environmental Condition uncovered or revealed at the Site.

ARTICLE 5 - BONDS AND INSURANCE

5.01 *Performance, Payment, and Other Bonds*

A. Contractor shall furnish performance and payment bonds, each in an amount at least equal to the Contract Price as security for the faithful performance and payment of all of Contractor's obligations under the Contract Documents. These bonds shall remain in effect until one year after the date when final payment becomes due or until completion of the correction period specified in Paragraph 13.07, whichever is later, except as provided otherwise by Laws or Regulations or by the Contract Documents. Contractor shall also furnish such other bonds as are required by the Contract Documents.

B. All bonds shall be in the form prescribed by the Contract Documents except as provided otherwise by Laws or Regulations, and shall be executed by such sureties as are named in the current list of "Companies Holding Certificates of Authority as Acceptable Sureties on Federal Bonds and as Acceptable Reinsuring Companies" as published in Circular 570 (amended) by the Financial Management Service, Surety Bond Branch, U.S. Department of the Treasury. All bonds signed by an agent must be accompanied by a certified copy of the agent's authority to act.

C. If the surety on any bond furnished by Contractor is declared bankrupt or becomes insolvent or its right to do business is terminated in any state where any part of the Project is located or it ceases to meet the requirements of Paragraph 5.01.B, Contractor shall promptly notify Owner and Engineer and shall, within 20 days after the event giving rise to such notification, provide another bond and surety, both of which shall comply with the requirements of Paragraphs 5.01.B and 5.02.

5.02 *Licensed Sureties and Insurers*

A. All bonds and insurance required by the Contract Documents shall be obtained from solvent surety or insurance companies that are duly licensed by the State of Texas and authorized to issue bonds or insurance policies for the limits and coverages required by the Contract Documents. The bonds shall be in a form acceptable to the Owner and shall be issued by a surety which complies with the requirements of Art. 7.19-1, Texas Insurance Code and which is otherwise acceptable to the Owner. Owner may require the surety to obtain reinsurance for any portion of the risk that exceeds 10% of the surety's capital and surplus. For bonds exceeding $100,000, the surety must also hold a certificate of authority from the U.S. Secretary of the Treasury or have obtained reinsurance from a reinsurer that is authorized as a reinsurer in Texas and holds a certificate of authority from the U.S. Secretary of the Treasury.
Such surety and insurance companies shall also meet such additional requirements and qualifications as may be provided in the Supplementary Conditions.

5.03 *Certificates of Insurance*

A. Contractor shall deliver to Owner, with copies to each additional insured identified in the Supplementary Conditions, certificates of insurance (and other evidence of insurance requested by Owner or any other additional insured) which Contractor is required to purchase and maintain.

B. Owner shall deliver to Contractor, with copies to each additional insured identified in the Supplementary Conditions, certificates of insurance (and other evidence of insurance requested by Contractor or any other additional insured) which Owner is required to purchase and maintain.

5.04 *Contractor's Liability Insurance*

A. Contractor shall purchase and maintain such liability and other insurance as is appropriate for the Work being performed and as will provide protection from claims set forth below which may arise out of or result from Contractor's performance of the Work and Contractor's other obligations under the Contract Documents, whether it is to be performed by Contractor, any Subcontractor or Supplier, or by anyone directly or indirectly employed by any of them to perform any of the Work, or by anyone for whose acts any of them may be liable:

1. claims under workers' compensation, disability benefits, and other similar employee benefit acts;

2. claims for damages because of bodily injury, occupational sickness or disease, or death of Contractor's employees;

3. claims for damages because of bodily injury, sickness or disease, or death of any person other than Contractor's employees;

4. claims for damages insured by reasonably available personal injury liability coverage which are sustained:

Copyright © 2002 National Society of Professional Engineers for EJCDC. All rights reserved.

a. by any person as a result of an offense directly or indirectly related to the employment of such person by Contractor, or

b. by any other person for any other reason;

5. claims for damages, other than to the Work itself, because of injury to or destruction of tangible property wherever located, including loss of use resulting therefrom; and

6. claims for damages because of bodily injury or death of any person or property damage arising out of the ownership, maintenance or use of any motor vehicle.

B. The policies of insurance required by this Paragraph 5.04 shall:

1. with respect to insurance required by Paragraphs 5.04.A.3 through 5.04.A.6 inclusive, include as additional insured (subject to any customary exclusion regarding professional liability) Owner and Engineer, and any other individuals or entities identified in the Supplementary Conditions, all of whom shall be listed as additional insureds, and include coverage for the respective officers, directors, partners, employees, agents, consultants and subcontractors of each and any of all such additional insureds, and the insurance afforded to these additional insureds shall provide primary coverage for all claims covered thereby;

2. include at least the specific coverages and be written for not less than the limits of liability provided in the Supplementary Conditions or required by Laws or Regulations, whichever is greater;

3. include completed operations insurance;

4. include contractual liability insurance covering Contractor’s indemnity obligations under Paragraphs 6.11 and 6.20;

5. contain a provision or endorsement that the coverage afforded will not be canceled, materially changed or renewal refused until at least 30 days prior written notice has been given to Owner and Contractor and to each other additional insured identified in the Supplementary Conditions to whom a certificate of insurance has been issued (and the certificates of insurance furnished by the Contractor pursuant to Paragraph 5.03 will so provide);

6. remain in effect at least until final payment and at all times thereafter when Contractor may be correcting, removing, or replacing defective Work in accordance with Paragraph 13.07; and

7. with respect to completed operations insurance, and any insurance coverage written on a claims-made basis, remain in effect for at least two years after final payment.

a. Contractor shall furnish Owner and each other additional insured identified in the Supplementary Conditions, to whom a certificate of insurance has been issued, evidence satisfactory to Owner and any such additional insured of continuation of such insurance at final payment and one year thereafter.

5.05 *Workers' Compensation Insurance Coverage.*

A. Definitions:

Certificate of coverage ("certificate") - A copy of a certificate of insurance, a certificate of authority to self-insure issued by the commission, or a coverage agreement (TWCC-81, TWCC-82, TWCC-83, or TWCC-84), showing statutory workers' compensation insurance coverage for the person's or entity's employees providing services on a project, for the duration of the Project.

Duration of the Project - includes the time from the beginning of the work on the project until the contractor's/person's work on the project has been completed and accepted by the governmental entity.

Persons providing services on the project ("subcontractor" in §406.096) - includes all persons or entities performing all or part of the services the contractor has undertaken to perform on the project, regardless of whether that person contracted directly with the contractor and regardless of whether that person has employees. This includes, without limitation, independent contractors, subcontractors, leasing companies, motor carriers, owner-operators, employees of any such entity, or employees of any entity which furnishes persons to provide services on the project. "Services" include, without limitation, providing, hauling, or delivering equipment or materials, or providing labor, transportation, or other service related to a project. "Services" does not include activities unrelated to the project, such as food/beverage vendors, office supply deliveries, and delivery of portable toilets.

B. The Contractor shall provide coverage, based on proper reporting of classification codes and payroll amounts and filing of any coverage agreements, which meets the statutory requirements of Texas Labor Code, Section 401.011(44) for all employees of the Contractor providing services on the project, for the duration of the project.

C. The Contractor must provide a certificate of coverage to the governmental entity prior to being awarded the Contract.

D. If the coverage period shown on the contractor's current certificate of coverage ends during the duration of the project, the contractor must, prior to the end

Copyright © 2002 National Society of Professional Engineers for EJCDC. All rights reserved.

of the coverage period, file a new certificate of coverage with the governmental entity showing that coverage has been extended.

E. The Contractor shall obtain from each person providing services on a project, and provide to the governmental entity:

(1) a certificate of coverage, prior to that person beginning work on the project, so the governmental entity will have on file certificates of coverage showing coverage for all persons providing services on the project; and

(2) no later than seven days after receipt by the contractor, a new certificate of coverage showing extension of coverage, if the coverage period shown on the current certificate of coverage ends during the duration of the project.

F. The Contractor shall retain all required certificates of coverage for the duration of the Project and for one year thereafter.

G. The Contractor shall notify the governmental entity in writing by certified mail or personal delivery, within 10 days after the Contractor knew or should have known, of any change that materially affects the provision of coverage of any person providing services on the project.

H. The Contractor shall post on each project site a notice, in the text, form and manner prescribed by the Texas Workers' Compensation Commission, informing all persons providing services on the project that they are required to be covered, and stating how a person may verify coverage and report lack of coverage. This notice does not satisfy other posting requirements imposed by the Act or other commission rules. This notice must be printed with a title in at least 30 point bold type and text in at least 19 point normal type, and shall be in both English and Spanish and any other language common to the worker population. The text for the notices shall be the following text provided by the commission on the sample notice, without any additional words or changes:

"REQUIRED WORKERS' COMPENSATION COVERAGE"

"The law requires that each person working on this site or providing services related to this construction project must be covered by workers' compensation insurance. This includes persons providing, hauling, or delivering equipment or materials, or providing labor or transportation or other service related to the project, regardless of the identity of their employer or status as an employee."

"Call the Texas Workers' Compensation Commission at 512-440-3789 to receive information on the legal requirement for coverage, to verify whether your employer has provided the required coverage, or to report an employer's failure to provide coverage."

I. The Contractor shall contractually require each person with whom it contracts to provide services on a project, to:

(1) provide coverage, based on proper reporting of classification codes and payroll amounts and filing of any coverage agreements, which meets the statutory requirements of Texas Labor Code, Section 401.011(44) for all of its employees providing services on the project, for the duration of the project;

(2) provide to the Contractor, prior to that person beginning work on the project, a certificate of coverage showing that coverage is being provided for all employees of the person providing services on the Project, for the duration of the Project;

(3) provide the Contractor, prior to the end of the coverage period, a new certificate of coverage showing extension of coverage, if the coverage period shown on the current certificate of coverage ends during the duration of the Project;

(4) obtain from each other person with whom it contracts, and provide to the Contractor:

(a) a certificate of coverage, prior to the other person beginning work on the Project; and

(b) a new certificate of coverage showing extension of coverage, prior to the end of the coverage period, if the coverage period shown on the current certificate of coverage ends during the duration of the Project;

(5) retain all required certificates of coverage on file for the duration of the Project and for one year thereafter;

(6) notify the governmental entity in writing by certified mail or personal delivery, within 10 days after the person knew or should have known, of any change that materially affects the provision of coverage of any person providing services on the Project; and

(7) contractually require each person with whom it contracts, to perform as required by Paragraphs (1) - (7), with the certificates of coverage to be provided to the person for whom they are providing services.

J. By signing this Contract or providing or causing to be provided a certificate of coverage, the Contractor is representing to the Owner that all employees of the Contractor who will provide services on the Project will be covered by workers' compensation coverage for the

Copyright © 2002 National Society of Professional Engineers for EJCDC. All rights reserved.

duration of the Project, that the coverage will be based on proper reporting of classification codes and payroll amounts, and that all coverage agreements will be filed with the appropriate insurance carrier or, in the case of a self-insured, with the commission's Division of Self-Insurance Regulation. Providing false or misleading information may subject the Contractor to administrative penalties, criminal penalties, civil penalties, or other civil actions.

K. The Contractor's failure to comply with any of these provisions is a breach of contract by the Contractor which entitles the Owner to declare the Contract void if the Contractor does not remedy the breach within ten days after receipt of notice of breach from the Owner.

5.06 *Builder's Risk Insurance*

A. Unless otherwise provided in the Supplementary Conditions, Contractor shall purchase and maintain property insurance upon the Work at the Site in the amount of the full replacement cost thereof (subject to such deductible amounts as may be provided in the Supplementary Conditions or required by Laws and Regulations). This insurance shall:

1. include the interests of Owner, Contractor, Subcontractors, and Engineer, and any other individuals or entities identified in the Supplementary Conditions, and the officers, directors, partners, employees, agents, consultants and subcontractors of each and any of them, each of whom is deemed to have an insurable interest and shall be listed as an insured or additional insured;

2. be written on a Builder's Risk "all-risk" or open peril or special causes of loss policy form that shall at least include insurance for physical loss or damage to the Work, temporary buildings, false work, and materials and equipment in transit, and shall insure against at least the following perils or causes of loss: fire, lightning, extended coverage, theft, vandalism and malicious mischief, earthquake, collapse, debris removal, demolition occasioned by enforcement of Laws and Regulations, water damage, (other than caused by flood) and such other perils or causes of loss as may be specifically required by the Supplementary Conditions;

3. include expenses incurred in the repair or replacement of any insured property (including but not limited to fees and charges of engineers and architects);

4. cover materials and equipment stored at the Site or at another location that was agreed to in writing by Owner prior to being incorporated in the Work, provided that such materials and equipment have been included in an Application for Payment recommended by Engineer;

5. allow for partial utilization of the Work by Owner;

6. include testing and startup; and

7. be maintained in effect until final payment is made unless otherwise agreed to in writing by Owner, Contractor, and Engineer with 30 days written notice to each other additional insured to whom a certificate of insurance has been issued.

B. Contractor shall purchase and maintain such boiler and machinery insurance or additional property insurance as may be required by the Supplementary Conditions or Laws and Regulations which will include the interests of Owner, Contractor, Subcontractors, and Engineer, and any other individuals or entities identified in the Supplementary Conditions, and the officers, directors, partners, employees, agents, consultants and subcontractors of each and any of them, each of whom is deemed to have an insurable interest and shall be listed as an insured or additional insured.

C. All the policies of insurance (and the certificates or other evidence thereof) required to be purchased and maintained in accordance with Paragraph 5.06 will contain a provision or endorsement that the coverage afforded will not be canceled or materially changed or renewal refused until at least 30 days prior written notice has been given to Owner and Contractor and to each other additional insured to whom a certificate of insurance has been issued and will contain waiver provisions in accordance with Paragraph 5.07.

D. Owner shall not be responsible for purchasing and maintaining any property insurance specified in this Paragraph 5.06 to protect the interests of Contractor, Subcontractors, or others in the Work to the extent of any deductible amounts that are identified in the Supplementary Conditions. The risk of loss within such identified deductible amount will be borne by Contractor, Subcontractors, or others suffering any such loss, and if any of them wishes property insurance coverage within the limits of such amounts, each may purchase and maintain it at the purchaser's own expense.

5.07 *Waiver of Rights*

A. Owner and Contractor intend that all policies purchased in accordance with Paragraph 5.06 will protect Owner, Contractor, Subcontractors, and Engineer, and all other individuals or entities identified in the Supplementary Conditions to be listed as insureds or additional insureds (and the officers, directors, partners, employees, agents, consultants and subcontractors of each and any of them) in such policies and will provide primary coverage for all losses and damages caused by the perils or causes of loss covered thereby. All such policies shall contain

Copyright © 2002 National Society of Professional Engineers for EJCDC. All rights reserved.

provisions to the effect that in the event of payment of any loss or damage the insurers will have no rights of recovery against any of the insureds or additional insureds thereunder. Owner and Contractor waive all rights against each other and their respective officers, directors, partners, employees, agents, consultants and subcontractors of each and any of them for all losses and damages caused by, arising out of or resulting from any of the perils or causes of loss covered by such policies and any other property insurance applicable to the Work; and, in addition, waive all such rights against Subcontractors, and Engineer, and all other individuals or entities identified in the Supplementary Conditions to be listed as insured or additional insured (and the officers, directors, partners, employees, agents, consultants and subcontractors of each and any of them) under such policies for losses and damages so caused. None of the above waivers shall extend to the rights that any party making such waiver may have to the proceeds of insurance held by Owner as trustee or otherwise payable under any policy so issued.

B. Owner waives all rights against Contractor, Subcontractors, and Engineer, and the officers, directors, partners, employees, agents, consultants and subcontractors of each and any of them for:

2. loss or damage to the completed Project or part thereof caused by, arising out of, or resulting from fire or other insured peril or cause of loss covered by any property insurance maintained on the completed Project or part thereof by Owner during partial utilization pursuant to Paragraph 14.05, after Substantial Completion pursuant to Paragraph 14.04, or after final payment pursuant to Paragraph 14.07.

5.08 *Receipt and Application of Insurance Proceeds*

A. Any insured loss under the policies of insurance required by Paragraph 5.06 will be adjusted with Owner and made payable to Owner as fiduciary for the insureds, as their interests may appear, subject to the requirements of any applicable mortgage clause and of Paragraph 5.08.B. Owner shall deposit in a separate account any money so received and shall distribute it in accordance with such agreement as the parties in interest may reach. If no other special agreement is reached, the damaged Work shall be repaired or replaced, the moneys so received applied on account thereof, and the Work and the cost thereof covered by an appropriate Change Order .

B. Owner as fiduciary shall have power to adjust and settle any loss with the insurers unless one of the parties in interest shall object in writing within 15 days after the occurrence of loss to Owner's exercise of this power. If such objection be made, Owner as fiduciary shall make settlement with the insurers in accordance with such agreement as the parties in interest may reach. If no such agreement among the parties in interest is reached, Owner as fiduciary shall adjust and settle the loss with the insurers.

5.09 *Acceptance of Bonds and Insurance; Option to Replace*

A. If either Owner or Contractor has any objection to the coverage afforded by or other provisions of the bonds or insurance required to be purchased and maintained by the other party in accordance with Article 5 on the basis of non-conformance with the Contract Documents, the objecting party shall so notify the other party in writing within 10 days after receipt of the certificates (or other evidence requested) required by Paragraph 2.01.B. Owner and Contractor shall each provide to the other such additional information in respect of insurance provided as the other may reasonably request. If either party does not purchase or maintain all of the bonds and insurance required of such party by the Contract Documents, such party shall notify the other party in writing of such failure to purchase prior to the start of the Work, or of such failure to maintain prior to any change in the required coverage. Without prejudice to any other right or remedy, the other party may elect to obtain equivalent bonds or insurance to protect such other party's interests at the expense of the party who was required to provide such coverage, and a Change Order shall be issued to adjust the Contract Price accordingly.

5.10 *Partial Utilization, Acknowledgment of Property Insurer*

A. If Owner finds it necessary to occupy or use a portion or portions of the Work prior to Substantial Completion of all the Work as provided in Paragraph 14.05, no such use or occupancy shall commence before the insurers providing the property insurance pursuant to Paragraph 5.06 have acknowledged notice thereof and in writing effected any changes in coverage necessitated thereby. The insurers providing the property insurance shall consent by endorsement on the policy or policies, but the property insurance shall not be canceled or permitted to lapse on account of any such partial use or occupancy.

ARTICLE 6 - CONTRACTOR'S RESPONSIBILITIES

6.01 *Supervision and Superintendence*

A. Contractor shall supervise, inspect, and direct the Work competently and efficiently, devoting such attention thereto and applying such skills and expertise as may be necessary to perform the Work in accordance with the Contract Documents. Contractor shall be solely responsible for the means, methods, techniques, sequences, and procedures of construction. Contractor shall not be responsible for the negligence of Owner or Engineer in the design or specification of a specific

Copyright © 2002 National Society of Professional Engineers for EJCDC. All rights reserved.

means, method, technique, sequence, or procedure of construction which is shown or indicated in and expressly required by the Contract Documents.

B. The Contractor shall have an English-speaking, competent Superintendent on the Work at all times that Work is in progress. Upon request of Owner, the Contractor shall present the resume of the proposed Superintendent to Owner showing evidence of experience and successful superintendence and direction of work of a similar scale and complexity. If, in the opinion of Owner, the proposed Superintendent does not indicate sufficient experience in line with the Work, he/she will not be allowed to be the designated Superintendent for the Work. The Superintendent shall not be replaced without Written Notice to Owner. If the Contractor deems it necessary to replace the Superintendent, the Contractor shall provide the necessary information for approval, as stated above, on the proposed new Superintendent. A qualified substitute Superintendent may be designated in the event that the designated Superintendent is temporarily away from the Work, but not to exceed a time limit acceptable to Owner. The Contractor shall replace the Superintendent upon the Owner's request in the event the Superintendent is unable to perform to the Owner's satisfaction. The Superintendent will be the Contractor's representative on the Work and shall have the authority to act on behalf of the Contractor. All communications given to the Superintendent shall be as binding as if given to the Contractor. Either the Contractor or the Superintendent shall provide an emergency and home telephone number at which one or the other may be reached if necessary when work is not in progress.

C. The Contractor agrees to employ only orderly and competent workers, skillful in performance of the type of Work required under the Contract. The Contractor, Subcontractors, Sub-subcontractors, and their employees may not use or possess any firearms, alcoholic or other intoxicating beverages, illegal drugs or controlled substances while on the job or on the Owner's property, nor may such workers be intoxicated, or under the influence of alcohol or drugs, on the job. If the Owner or Owner's Representative notifies the Contractor that any worker is incompetent, disorderly or disobedient, has knowingly or repeatedly violated safety regulations, has possessed any firearms, or has possessed or was under the influence of alcohol or drugs on the job, the Contractor shall immediately remove such worker from performing Contract Work, and may not employ such worker again on Contract Work without the Owner's prior written consent. The Contractor shall at all times maintain good discipline and order on or off the site in all matters pertaining to the Project.

6.02 *Labor; Working Hours*

A. Contractor shall provide competent, suitably qualified personnel to survey and lay out the Work and perform construction as required by the Contract Documents. Contractor shall at all times maintain good discipline and order at the Site.

B. Except as otherwise required for the safety or protection of persons or the Work or property at the Site or adjacent thereto, and except as otherwise stated in the Contract Documents, all Work at the Site shall be performed during regular working hours. Contractor will not permit the performance of Work on a Saturday, Sunday, or any legal holiday without Owner's written consent (which will not be unreasonably withheld) given after prior written notice to Engineer.

6.03 *Services, Materials, and Equipment*

A. Unless otherwise specified in the Contract Documents, Contractor shall provide and assume full responsibility for all services, materials, equipment, labor, transportation, construction equipment and machinery, tools, appliances, fuel, power, light, heat, telephone, water, sanitary facilities, temporary facilities, and all other facilities and incidentals necessary for the performance, testing, start-up, and completion of the Work.

B. All materials and equipment incorporated into the Work shall be as specified or, if not specified, shall be of good quality and new, except as otherwise provided in the Contract Documents. All special warranties and guarantees required by the Specifications shall expressly run to the benefit of Owner. The Contractor agrees to assign to the Owner at the time of final completion of the Work any and all manufacturer's warranties relating to materials and labor used in the Work, and the Contractor further agrees to perform the Work in such manner to preserve any and all manufacture's warranties. If required by Engineer, Contractor shall furnish satisfactory evidence (including reports of required tests) as to the source, kind, and quality of materials and equipment.

1. The Contractor shall furnish twenty-four (24) hour callback maintenance service for the equipment provided by the Contractor for a period of three (3) months after completion and acceptance of the Work. This service shall include regular examination of the equipment by competent and trained employees of the Contractor and shall include all necessary adjustments, greasing, oiling, cleaning, supplies, and parts to keep the equipment in proper operation, except parts made necessary by misuse, accident, or negligence not caused by the Contractor or any Subcontractors of any tier.

C. All materials and equipment shall be stored, applied, installed, connected, erected, protected, used, cleaned, and conditioned in accordance with instructions of the applicable Supplier, except as otherwise may be provided in the Contract Documents.

Copyright © 2002 National Society of Professional Engineers for EJCDC. All rights reserved.

6.04 *Progress Schedule*

A. Contractor shall adhere to the Progress Schedule established in accordance with Paragraph 2.07 as it may be adjusted from time to time as provided below.

1. Contractor shall submit to Engineer for acceptance (to the extent indicated in Paragraph 2.07) proposed adjustments in the Progress Schedule that will not result in changing the Contract Times. Such adjustments will comply with any provisions of the General Requirements applicable thereto.

2. Proposed adjustments in the Progress Schedule that will change the Contract Times shall be submitted in accordance with the requirements of Article 12. Adjustments in Contract Times may only be made by a Change Order.

6.05 *Substitutes and "Or-Equals"*

A. Whenever an item of material or equipment is specified or described in the Contract Documents by using the name of a proprietary item or the name of a particular Supplier, the specification or description is intended to establish the type, function, appearance, and quality required. Unless the specification or description contains or is followed by words reading that no like, equivalent, or "or-equal" item or no substitution is permitted, other items of material or equipment or material or equipment of other Suppliers may be submitted to Engineer for review under the circumstances described below.

1. *"Or-Equal" Items:* If in Engineer's sole discretion an item of material or equipment proposed by Contractor is functionally equal to that named and sufficiently similar so that no change in related Work will be required, it may be considered by Engineer as an "or-equal" item, in which case review and approval of the proposed item may, in Engineer's sole discretion, be accomplished without compliance with some or all of the requirements for approval of proposed substitute items. For the purposes of this Paragraph 6.05.A.1, a proposed item of material or equipment will be considered functionally equal to an item so named if:

a. in the exercise of reasonable judgment Engineer determines that:

1) it is at least equal in materials of construction, quality, durability, appearance, strength, and design characteristics;

2) it will reliably perform at least equally well the function and achieve the results imposed by the design concept of the completed Project as a functioning whole,

3) it has a proven record of performance and availability of responsive service; and

b. Contractor certifies that, if approved and incorporated into the Work:

1) there will be no increase in cost to the Owner or increase in Contract Times, and

2) it will conform substantially to the detailed requirements of the item named in the Contract Documents.

2. Substitute Items

a. If in Engineer's sole discretion an item of material or equipment proposed by Contractor does not qualify as an "or-equal" item under Paragraph 6.05.A.1, it will be considered a proposed substitute item.

b. Contractor shall submit sufficient information as provided below to allow Engineer to determine that the item of material or equipment proposed is essentially equivalent to that named and an acceptable substitute therefor. Requests for review of proposed substitute items of material or equipment will not be accepted by Engineer from anyone other than Contractor.

c. The requirements for review by Engineer will be as set forth in Paragraph 6.05.A.2.d, as supplemented in the General Requirements and as Engineer may decide is appropriate under the circumstances.

d. Contractor shall make written application to Engineer for review of a proposed substitute item of material or equipment that Contractor seeks to furnish or use. The application:

1) shall certify that the proposed substitute item will:

a) perform adequately the functions and achieve the results called for by the general design,

b) be similar in substance to that specified, and

c) be suited to the same use as that specified;

2) will state:

a) the extent, if any, to which the use of the proposed substitute item will prejudice Contractor's achievement of Substantial Completion on time;

b) whether or not use of the proposed substitute item in the Work will require

Copyright © 2002 National Society of Professional Engineers for EJCDC. All rights reserved.

a change in any of the Contract Documents (or in the provisions of any other direct contract with Owner for other work on the Project) to adapt the design to the proposed substitute item; and

c) whether or not incorporation or use of the proposed substitute item in connection with the Work is subject to payment of any license fee or royalty;

3) will identify:

a) all variations of the proposed substitute item from that specified , and

b) available engineering, sales, maintenance, repair, and replacement services;

4) and shall contain an itemized estimate of all costs or credits that will result directly or indirectly from use of such substitute item, including costs of redesign and claims of other contractors affected by any resulting change,

B. *Substitute Construction Methods or Procedures:* If a specific means, method, technique, sequence, or procedure of construction is expressly required by the Contract Documents, Contractor may furnish or utilize a substitute means, method, technique, sequence, or procedure of construction approved by Engineer. Contractor shall submit sufficient information to allow Engineer, in Engineer's sole discretion, to determine that the substitute proposed is equivalent to that expressly called for by the Contract Documents. The requirements for review by Engineer will be similar to those provided in Paragraph 6.05.A.2.

C. *Engineer's Evaluation:* Engineer will be allowed seven (7) days within which to evaluate each proposal or submittal made pursuant to Paragraphs 6.05.A and 6.05.B. Engineer may require Contractor to furnish additional data about the proposed substitute item. Engineer will be the sole judge of acceptability. No "or equal" or substitute will be ordered, installed or utilized until Engineer's review is complete, which will be evidenced by either a Change Order for a substitute or an approved Shop Drawing for an "or equal." Engineer will advise Contractor in writing of any negative determination.

D. *Special Guarantee:* Owner may require Contractor to furnish at Contractor's expense a special performance guarantee or other surety with respect to any substitute.

E. *Engineer's Cost Reimbursement*: Engineer will record Engineer's costs in evaluating a substitute proposed or submitted by Contractor pursuant to Paragraphs 6.05.A.2 and 6.05.B Whether or not Engineer approves a substitute item so proposed or submitted by Contractor, Contractor shall reimburse Owner for the charges of Engineer for evaluating each such proposed substitute. Contractor shall also reimburse Owner for the charges of Engineer for making changes in the Contract Documents (or in the provisions of any other direct contract with Owner) resulting from the acceptance of each proposed substitute.

F. *Contractor's Expense*: Contractor shall provide all data in support of any proposed substitute or "or-equal" at Contractor's expense.

6.06 *Concerning Subcontractors, Suppliers, and Others*

A. Not later than 14 days after the execution of the Agreement by the Contractor and Owner, the Contractor shall furnish the Owner and the Engineer, in writing, with (1) the name, trade, and subcontract amount for each Subcontractor and (2) the names of all persons or entities proposed as manufacturers of the products identified in the Specifications (including those who are to furnish materials or equipment fabricated to a special design) and, where applicable, the name of the installing Subcontractor. Contractor shall not employ any Subcontractor, Supplier, or other individual or entity (including those acceptable to Owner as indicated in Paragraph 6.06.B), whether initially or as a replacement, against whom Owner may have reasonable objection. Contractor shall not be required to employ any Subcontractor, Supplier, or other individual or entity to furnish or perform any of the Work against whom Contractor has reasonable objection.

B. If the Supplementary Conditions require the identity of certain Subcontractors, Suppliers, or other individuals or entities to be submitted to Owner in advance for acceptance by Owner by a specified date prior to the Effective Date of the Agreement, and if Contractor has submitted a list thereof in accordance with the Supplementary Conditions, Owner's acceptance (either in writing or by failing to make written objection thereto by the date indicated for acceptance or objection in the Bidding Documents or the Contract Documents) of any such Subcontractor, Supplier, or other individual or entity so identified may be revoked on the basis of reasonable objection after due investigation. Contractor shall submit an acceptable replacement for the rejected Subcontractor, Supplier, or other individual or entity, and the Contract Price will be adjusted by the difference in the cost occasioned by such replacement, and an appropriate Change Order will be issued. No acceptance by Owner of any such Subcontractor, Supplier, or other individual or entity, whether initially or as a replacement, shall constitute a waiver of any right of Owner or Engineer to reject defective Work.

Copyright © 2002 National Society of Professional Engineers for EJCDC. All rights reserved.

C. Contractor shall be fully responsible to Owner and Engineer for all acts and omissions of the Subcontractors, Suppliers, and other individuals or entities performing or furnishing any of the Work just as Contractor is responsible for Contractor's own acts and omissions. Nothing in the Contract Documents:

1. shall create for the benefit of any such Subcontractor, Supplier, or other individual or entity any contractual relationship between Owner or Engineer and any such Subcontractor, Supplier or other individual or entity, nor

2. shall anything in the Contract Documents create any obligation on the part of Owner or Engineer to pay or to see to the payment of any moneys due any such Subcontractor, Supplier, or other individual or entity except as may otherwise be required by Laws and Regulations.

D. Contractor shall be solely responsible for scheduling and coordinating the Work of Subcontractors, Suppliers, and other individuals or entities performing or furnishing any of the Work under a direct or indirect contract with Contractor.

E. Contractor shall require all Subcontractors, Suppliers, and such other individuals or entities performing or furnishing any of the Work to communicate with Engineer through Contractor.

F. The divisions and sections of the Specifications and the identifications of any Drawings shall not control Contractor in dividing the Work among Subcontractors or Suppliers or delineating the Work to be performed by any specific trade.

G. All Work performed for Contractor by a Subcontractor or Supplier will be pursuant to an appropriate agreement between Contractor and the Subcontractor or Supplier which specifically binds the Subcontractor or Supplier to the applicable terms and conditions of the Contract Documents for the benefit of Owner and Engineer. Whenever any such agreement is with a Subcontractor or Supplier who is listed as an additional insured on the property insurance provided in Paragraph 5.06, the agreement between the Contractor and the Subcontractor or Supplier will contain provisions whereby the Subcontractor or Supplier waives all rights against Owner, Contractor, and Engineer,, and all other individuals or entities identified in the Supplementary Conditions to be listed as insureds or additional insureds (and the officers, directors, partners, employees, agents, consultants and subcontractors of each and any of them) for all losses and damages caused by, arising out of, relating to, or resulting from any of the perils or causes of loss covered by such policies and any other property insurance applicable to the Work. If the insurers on any such policies require separate waiver forms to be signed by any Subcontractor or Supplier, Contractor will obtain the same.

6.07 *Patent Fees and Royalties*

A. Contractor shall pay all license fees and royalties and assume all costs incident to the use in the performance of the Work or the incorporation in the Work of any invention, design, process, product, or device which is the subject of patent rights or copyrights held by others. If a particular invention, design, process, product, or device is specified in the Contract Documents for use in the performance of the Work and if to the actual knowledge of Owner or Engineer its use is subject to patent rights or copyrights calling for the payment of any license fee or royalty to others, the existence of such rights shall be disclosed by Owner in the Contract Documents.

B. To the fullest extent permitted by Laws and Regulations, Contractor shall indemnify and hold harmless Owner and Engineer, and the officers, directors, partners, employees, agents, consultants and subcontractors of each and any of them from and against all claims, costs, losses, and damages (including but not limited to all fees and charges of engineers, architects, attorneys, and other professionals and all court or arbitration or other dispute resolution costs) arising out of or relating to any infringement of patent rights or copyrights incident to the use in the performance of the Work or resulting from the incorporation in the Work of any invention, design, process, product, or device not specified in the Contract Documents.

6.08 *Permits*

A. Unless otherwise provided in the Supplementary Conditions, Contractor shall obtain and pay for all construction permits and licenses. Owner shall assist Contractor, when necessary, in obtaining such permits and licenses. Contractor shall pay all governmental charges and inspection fees necessary for the prosecution of the Work which are applicable at the time of opening of Bids, or, if there are no Bids, on the Effective Date of the Agreement. Owner shall pay all charges of utility owners for connections for providing permanent service to the Work.

6.09 *Laws and Regulations*

A. Contractor shall give all notices required by and shall comply with all Laws and Regulations applicable to the performance of the Work. Except where otherwise expressly required by applicable Laws and Regulations, neither Owner nor Engineer shall be responsible for monitoring Contractor's compliance with any Laws or Regulations. The Contractor shall plan and execute its operations in compliance with all applicable Federal, State and local laws and regulations, including those concerning control and abatement of water pollution

Copyright © 2002 National Society of Professional Engineers for EJCDC. All rights reserved.

and prevention and control of air pollution. The Contractor shall conduct activities in compliance with applicable laws and regulations and other requirements of the Contract relating to the environment, and its protection at all times. Unless otherwise specifically determined, the Contractor is responsible for obtaining and maintaining permits related to storm water run-off. The Contractor shall conduct operations consistent with storm water run-off permit conditions.

B. If Contractor performs any Work knowing or having reason to know that it is contrary to Laws or Regulations, Contractor shall bear all claims, costs, losses, and damages (including but not limited to all fees and charges of engineers, architects, attorneys, and other professionals and all court or arbitration or other dispute resolution costs) arising out of or relating to such Work.

C. Changes in Laws or Regulations not known at the time of opening of Bids (or, on the Effective Date of the Agreement if there were no Bids) having an effect on the cost or time of performance of the Work shall be the subject of an adjustment in Contract Price or Contract Times. If Owner and Contractor are unable to agree on entitlement to or on the amount or extent, if any, of any such adjustment, a Claim may be made therefor as provided in Paragraph 10.05.

6.10 *Taxes*

A. Contractor shall pay all sales, consumer, use, and other similar taxes required to be paid by Contractor in accordance with the Laws and Regulations of the place of the Project which are applicable during the performance of the Work.

B. The Owner is an exempt organization as defined by Chapter 11 of the Property Tax Code of Texas and is thereby exempt from payment of Sales Tax under Chapter 151, Limited Use Sales, Excise and Use Tax, Texas Tax Code, and Article 1066 (C), Local Sales and Use Tax Act, Revised Civil Statutes of Texas. The Owner may issue a "Texas Sales and Use Tax Exemption Certification" authorizing the Contractor to use same in the purchase of materials for the Project.

6.11 *Use of Site and Other Areas*

A. Limitation on Use of Site and Other Areas

1. Contractor shall confine construction equipment, the storage of materials and equipment, and the operations of workers to the Site and other areas permitted by Laws and Regulations, and shall not unreasonably encumber the Site and other areas with construction equipment or other materials or equipment. Contractor shall assume full responsibility for any damage to any such land or area, or to the owner or occupant thereof, or of any adjacent land or areas resulting from the performance of the Work.

2. Should any claim be made by any such owner or occupant because of the performance of the Work, Contractor shall promptly settle with such other party by negotiation or otherwise resolve the claim by arbitration or other dispute resolution proceeding or at law.

3. To the fullest extent permitted by Laws and Regulations, Contractor shall indemnify and hold harmless Owner and Engineer, and the officers, directors, partners, employees, agents, consultants and subcontractors of each and any of them from and against all claims, costs, losses, and damages (including but not limited to all fees and charges of engineers, architects, attorneys, and other professionals and all court or arbitration or other dispute resolution costs) arising out of or relating to any claim or action, legal or equitable, brought by any such owner or occupant against Owner, Engineer, or any other party indemnified hereunder to the extent caused by or based upon Contractor's performance of the Work.

B. *Removal of Debris During Performance of the Work:* During the progress of the Work Contractor shall keep the Site and other areas free from accumulations of waste materials, rubbish, and other debris. Removal and disposal of such waste materials, rubbish, and other debris shall conform to applicable Laws and Regulations.

C. *Cleaning:* Prior to Substantial Completion of the Work Contractor shall clean the Site and the Work and make it ready for utilization by Owner. At the completion of the Work Contractor shall remove from the Site all tools, appliances, construction equipment and machinery, and surplus materials and shall restore to original condition all property not designated for alteration by the Contract Documents.

D. *Loading Structures:* Contractor shall not load nor permit any part of any structure to be loaded in any manner that will endanger the structure, nor shall Contractor subject any part of the Work or adjacent property to stresses or pressures that will endanger it.

6.12 *Record Documents*

A. Contractor shall maintain in a safe place at the Site one record copy of all Drawings, Specifications,

Copyright © 2002 National Society of Professional Engineers for EJCDC. All rights reserved.

Addenda, Change Orders, Work Change Directives, Field Orders, and written interpretations and clarifications in good order and annotated to show changes made during construction. These record documents together with all approved Samples and a counterpart of all approved Shop Drawings will be available to Engineer for reference. Upon completion of the Work, these record documents, Samples, and Shop Drawings will be delivered to Engineer for Owner.

B. The Record Documents shall be updated to show the "As-Constructed" Drawings and Specifications monthly prior to submission of periodic Applications for Payment. Failure to update the "As-Constructed" Drawings and Specifications constitutes cause for denial of a progress payment otherwise due.

C. Upon Substantial Completion of the Work, these record documents, samples and Shop Drawings shall be promptly delivered to Owner. Prior to requesting a Substantial Completion inspection, Contractor shall furnish a complete set of the marked up "As-Constructed" Drawings and Specifications and one copy of same. Concurrently, Contractor shall submit a preliminary copy of each operating and maintenance manual required by the Contract Documents for review by the Owner and Engineer. Once determined acceptable, Contractor shall provide Mylar prints of professionally drafted "As Constructed" Drawings and Specifications in bound volumes along with electronic copies on CD in a format acceptable to Owner, two (2) sets of photocopies of the Mylar prints, two sets of operating and maintenance manuals, two sets of approved submittals, and any other record documents required by the Contract Documents.

6.13 *Safety and Protection*

A. Contractor shall be solely responsible for initiating, maintaining and supervising all safety precautions and programs in connection with the Work. Contractor shall take all necessary precautions for the safety of, and shall provide the necessary protection to prevent damage, injury or loss to:

1. all persons on the Site or who may be affected by the Work;

2. all the Work and materials and equipment to be incorporated therein, whether in storage on or off the Site; and

3. other property at the Site or adjacent thereto, including trees, shrubs, lawns, walks, pavements, roadways, structures, utilities, and Underground Facilities not designated for removal, relocation, or replacement in the course of construction.

B. Contractor shall comply with all applicable Laws and Regulations relating to the safety of persons or property, or to the protection of persons or property from damage, injury, or loss; and shall erect and maintain all necessary safeguards for such safety and protection. Contractor shall notify owners of adjacent property and of Underground Facilities and other utility owners when prosecution of the Work may affect them, and shall cooperate with them in the protection, removal, relocation, and replacement of their property.

C. All damage, injury, or loss to any property referred to in Paragraph 6.13.A.2 or 6.13.A.3 caused, directly or indirectly, in whole or in part, by Contractor, any Subcontractor, Supplier, or any other individual or entity directly or indirectly employed by any of them to perform any of the Work, or anyone for whose acts any of them may be liable, shall be remedied by Contractor (except damage or loss attributable to the fault of Drawings or Specifications or to the acts or omissions of Owner or Engineer or , or anyone employed by any of them, or anyone for whose acts any of them may be liable, and not attributable, directly or indirectly, in whole or in part, to the fault or negligence of Contractor or any Subcontractor, Supplier, or other individual or entity directly or indirectly employed by any of them).

D. Contractor's duties and responsibilities for safety and for protection of the Work shall continue until such time as all the Work is completed and Engineer has issued a notice to Owner and Contractor in accordance with Paragraph 14.07.B that the Work is acceptable (except as otherwise expressly provided in connection with Substantial Completion).

E. When the Work requires excavation which either exceed four (4) feet in depth or results in any worker's upper body being positioned below grade level, the Contractor is required to submit a trenching plan to the Owner prior to commencing trenching operations. The plan is required to be prepared and sealed by a professional engineer registered in the State of Texas, and employed by the Contractor. Said engineer cannot be anyone who is otherwise engaged directly or indirectly with this Project.

F. The Contractor shall erect and maintain, as required by existing conditions and performance of the Contractor, reasonable safeguards for safety and protection, including posting danger signs and other warnings against hazards, promulgating safety regulations and notifying owners and users of adjacent sites and utilities.

G. When use or storage of explosives or other hazardous materials or equipment or unusual methods are necessary for execution of the Work, the Contractor shall exercise utmost care and carry on such activities under supervision of properly qualified personnel.

6.14 *Safety Representative*

Copyright © 2002 National Society of Professional Engineers for EJCDC. All rights reserved.

A. Contractor shall designate a qualified and experienced safety representative at the Site whose duties and responsibilities shall be the prevention of accidents and the maintaining and supervising of safety precautions and programs.

6.15 *Hazard Communication Programs*

A. Contractor shall be responsible for coordinating any exchange of material safety data sheets or other hazard communication information required to be made available to or exchanged between or among employers at the Site in accordance with Laws or Regulations.

6.16 *Emergencies*

A. In emergencies affecting the safety or protection of persons or the Work or property at the Site or adjacent thereto, Contractor is obligated to act to prevent threatened damage, injury, or loss. Contractor shall give Engineer written notice immediately, and in no instance more than 24 hours after the alleged emergency, if Contractor believes that any significant changes in the Work or variations from the Contract Documents have been caused thereby or are required as a result thereof. If Engineer determines that a change in the Contract Documents is required because of the action taken by Contractor in response to such an emergency, a Work Change Directive or Change Order will be issued.

6.17 *Shop Drawings and Samples*

A. Contractor shall submit Shop Drawings and Samples to Engineer for review and approval in accordance with the acceptable Schedule of Submittals (as required by Paragraph 2.07). Each submittal will be identified as Engineer may require.

1. Shop Drawings

a. Submit number of copies specified in the General Requirements.

b. Data shown on the Shop Drawings will be complete with respect to quantities, dimensions, specified performance and design criteria, materials, and similar data to show Engineer the services, materials, and equipment Contractor proposes to provide and to enable Engineer to review the information for the limited purposes required by Paragraph 6.17.D.

2. *Samples:* Contractor shall also submit Samples to Engineer for review and approval in accordance with the acceptable schedule of Shop Drawings and Sample submittals.

a. Submit number of Samples specified in the Specifications.

b. Clearly identify each Sample as to material, Supplier, pertinent data such as catalog numbers, the use for which intended and other data as Engineer may require to enable Engineer to review the submittal for the limited purposes required by Paragraph 6.17.D.

B. Where a Shop Drawing or Sample is required by the Contract Documents or the Schedule of Submittals , any related Work performed prior to Engineer's review and approval of the pertinent submittal will be at the sole expense and responsibility of Contractor.

C. Submittal Procedures

1. Before submitting each Shop Drawing or Sample, Contractor shall have determined and verified:

a. all field measurements, quantities, dimensions, specified performance and design criteria, installation requirements, materials, catalog numbers, and similar information with respect thereto;

b. the suitability of all materials with respect to intended use, fabrication, shipping, handling, storage, assembly, and installation pertaining to the performance of the Work;

c. all information relative to Contractor's responsibilities for means, methods, techniques, sequences, and procedures of construction, and safety precautions and programs incident thereto; and

d. shall also have reviewed and coordinated each Shop Drawing or Sample with other Shop Drawings and Samples and with the requirements of the Work and the Contract Documents.

2. Each submittal shall bear a stamp or specific written certification that Contractor has satisfied Contractor's obligations under the Contract Documents with respect to Contractor's review and approval of that submittal.

3. With each submittal, Contractor shall give Engineer specific written notice of any variations, that the Shop Drawing or Sample may have from the requirements of the Contract Documents. This notice shall be both a written communication separate from the Shop Drawing's or Sample Submittal; and, in addition, by a specific notation made on each Shop Drawing or Sample submitted to Engineer for review and approval of each such variation.

D. Engineer's Review

1. Engineer will provide timely review of Shop Drawings and Samples in accordance with the Schedule of Submittals acceptable to Engineer. Engineer's review and approval will be only to determine if the items covered by the submittals will, after installation or

Copyright © 2002 National Society of Professional Engineers for EJCDC. All rights reserved.

incorporation in the Work, conform to the information given in the Contract Documents and be compatible with the design concept of the completed Project as a functioning whole as indicated by the Contract Documents.

2. Engineer's review and approval will not extend to means, methods, techniques, sequences, or procedures of construction (except where a particular means, method, technique, sequence, or procedure of construction is specifically and expressly called for by the Contract Documents) or to safety precautions or programs incident thereto. The review and approval of a separate item as such will not indicate approval of the assembly in which the item functions.

3. Engineer's review and approval shall not relieve Contractor from responsibility for any variation from the requirements of the Contract Documents unless Contractor has complied with the requirements of Paragraph 6.17.C.3 and Engineer has given written approval of each such variation by specific written notation thereof incorporated in or accompanying the Shop Drawing or Sample. Engineer's review and approval shall not relieve Contractor from responsibility for complying with the requirements of Paragraph 6.17.C.1.

E. Resubmittal Procedures

1. Contractor shall make corrections required by Engineer and shall return the required number of corrected copies of Shop Drawings and submit, as required, new Samples for review and approval. Contractor shall direct specific attention in writing to revisions other than the corrections called for by Engineer on previous submittals.

6.18 *Continuing the Work*

A. Contractor shall carry on the Work and adhere to the Progress Schedule during all disputes or disagreements with Owner. No Work shall be delayed or postponed pending resolution of any disputes or disagreements, except as permitted by Paragraph 15.04 or as Owner and Contractor may otherwise agree in writing.

6.19 *Contractor's General Warranty and Guarantee*

A. Contractor warrants and guarantees to Owner that all Work will be in accordance with the Contract Documents and will not be defective. Engineer and its Related Entities shall be entitled to rely on representation of Contractor's warranty and guarantee.

B. Contractor's warranty and guarantee hereunder excludes defects or damage caused by:

1. abuse, modification, or improper maintenance or operation by persons other than Contractor, Subcontractors, Suppliers, or any other individual or entity for whom Contractor is responsible; or

2. normal wear and tear under normal usage.

C. Contractor's obligation to perform and complete the Work in accordance with the Contract Documents shall be absolute. None of the following will constitute an acceptance of Work that is not in accordance with the Contract Documents or a release of Contractor's obligation to perform the Work in accordance with the Contract Documents:

1. observations by Engineer;

2. recommendation by Engineer or payment by Owner of any progress or final payment;

3. the issuance of a certificate of Substantial Completion by Engineer or any payment related thereto by Owner;

4. use or occupancy of the Work or any part thereof by Owner;

5. any review and approval of a Shop Drawing or Sample submittal or the issuance of a notice of acceptability by Engineer;

6. any inspection, test, or approval by others; or

7. any correction of defective Work by Owner.

6.20 *Indemnification*

A. CONTRACTOR SHALL INDEMNIFY AND HOLD OWNER HARMLESS AGAINST ANY LOSS OR DAMAGE TO PERSONS OR PROPERTY AS A RESULT OF OPERATIONS GROWING OUT OF THE PERFORMANCE OF THIS CONTRACT AND CAUSED BY THE NEGLIGENCE OR CARELESSNESS OF CONTRACTOR, CONTRACTOR'S EMPLOYEES, SUBCONTRACTORS, AND AGENTS OR LICENSEES. THE CONTRACTOR SHALL UNCONDITIONALLY DEFEND AT ITS OWN COST AND SHALL INDEMNIFY AND HOLD HARMLESS THE OWNER, ENGINEER, ENGINEER'S CONSULTANTS AND SUB-CONSULTANTS AND THEIR RESPECTIVE OFFICERS, DIRECTORS, PARTNERS, EMPLOYEES, AGENTS AND OTHER CONSULTANTS AND ANY OF THEM FROM AND AGAINST ALL CLAIMS, JUDGMENTS, COSTS, LIENS, LIABILITIES, LOSSES, DAMAGES, PENALTIES, INTEREST, FEES, FINES, COSTS AND EXPENSES (INCLUDING BUT NOT LIMITED TO ALL FEES AND CHARGES OF ENGINEERS, ARCHITECTS, ATTORNEYS AND OTHER PROFESSIONALS AND ALL COURT OR

Copyright © 2002 National Society of Professional Engineers for EJCDC. All rights reserved.

OTHER DISPUTE RESOLUTION COSTS) IN ANY MANNER ARISING DIRECTLY OR INDIRECTLY OUT OF, OR RESULTING FROM, THE WORK PERFORMED HEREUNDER OR THE MATERIALS TO BE FURNISHED UNDER THE CONTRACT DOCUMENTS, THAT IS:

1. ATTRIBUTABLE TO BODILY INJURY, SICKNESS, DISEASE OR DEATH (INCLUDING EMPLOYEES OF CONTRACTOR AND OWNER), OR TO INJURY TO OR DESTRUCTION OF TANGIBLE PROPERTY (INCLUDING PROPERTY OF CONTRACTOR AND OWNER AND THE WORK ITSELF), INCLUDING THE LOSS OF USE RESULTING THEREFROM, AND

2. CAUSED IN WHOLE OR IN PART BY ANY NEGLIGENT ACT, ERROR OR OMISSION; SOLE NEGLIGENCE; CONCURRENT NEGLIGENCE; JOINT NEGLIGENCE; ACTIVE OR PASSIVE NEGLIGENCE; GROSS NEGLIGENCE; NEGLIGENCE PER SE; STRICT LIABILITY; INVERSE CONDEMNATION, PATENT INFRINGEMENT; COPYRIGHT; CONDITION OF PROPERTY OR ITS PREMISES; LATENT DEFECTS; DEFECTS IN MATERIALS, WORKMANSHIP, OR DESIGN; WORKERS' COMPENSATION CLAIMS; DISABILITY ACT CLAIMS; EMPLOYEE BENEFIT CLAIMS; AND FAILURE TO COMPLY WITH ANY OF THE PROVISIONS OF THE CONTRACT DOCUMENTS; OR OTHER ACT OR OMISSION OF CONTRACTOR, OR CONTRACTOR'S EMPLOYEES, SUBCONTRACTORS, OR AGENTS OR LICENSEES.

B. In any and all claims against Owner or Engineer or any of their respective consultants, agents, officers, directors, partners, or employees by any employee (or the survivor or personal representative of such employee) of Contractor, any Subcontractor, any Supplier, or any individual or entity directly or indirectly employed by any of them to perform any of the Work, or anyone for whose acts any of them may be liable, the indemnification obligation under Paragraph 6.20.A shall not be limited in any way by any limitation on the amount or type of damages, compensation, or benefits payable by or for Contractor or any such Subcontractor, Supplier, or other individual or entity under workers' compensation acts, disability benefit acts, or other employee benefit acts.

C. The indemnification obligations of Contractor under Paragraph 6.20.A shall not extend to the liability of Engineer and Engineer's officers, directors, partners, employees, agents, consultants and subcontractors arising out of:

1. the preparation or approval of, or the failure to prepare or approve, maps, Drawings, opinions, reports, surveys, Change Orders, designs, or Specifications; or

2. giving directions or instructions, or failing to give them, if that is the primary cause of the injury or damage.

6.21 *Delegation of Professional Design Services*

A. Contractor will not be required to provide professional design services unless such services are specifically required by the Contract Documents for a portion of the Work or unless such services are required to carry out Contractor's responsibilities for construction means, methods, techniques, sequences and procedures. Contractor shall not be required to provide professional services in violation of applicable law.

B. If professional design services or certifications by a design professional related to systems, materials or equipment are specifically required of Contractor by the Contract Documents, Owner and Engineer will specify all performance and design criteria that such services must satisfy. Contractor shall cause such services or certifications to be provided by a properly licensed professional, whose signature and seal shall appear on all drawings, calculations, specifications, certifications, Shop Drawings and other submittals prepared by such professional. Shop Drawings and other submittals related to the Work designed or certified by such professional, if prepared by others, shall bear such professional's written approval when submitted to Engineer.

C. Owner and Engineer shall be entitled to rely upon the adequacy, accuracy and completeness of the services, certifications or approvals performed by such design professionals, provided Owner and Engineer have specified to Contractor all performance and design criteria that such services must satisfy.

D. Pursuant to this Paragraph 6.21, Engineer's review and approval of design calculations and design drawings will be only for the limited purpose of checking for conformance with performance and design criteria given and the design concept expressed in the Contract Documents. Engineer's review and approval of Shop Drawings and other submittals (except design calculations and design drawings) will be only for the purpose stated in Paragraph 6.17.D.1.

E. Contractor shall not be responsible for the adequacy of the performance or design criteria required by the Contract Documents.

Copyright © 2002 National Society of Professional Engineers for EJCDC. All rights reserved.

ARTICLE 7 - OTHER WORK AT THE SITE

7.01 *Related Work at Site*

A. Owner may perform other work related to the Project at the Site with Owner's employees, or via other direct contracts therefor, or have other work performed by utility owners. If such other work is not noted in the Contract Documents, then:

1. written notice thereof will be given to Contractor prior to starting any such other work.

B. Contractor shall afford each other contractor who is a party to such a direct contract, each utility owner and Owner, if Owner is performing other work with Owner's employees, proper and safe access to the Site, a reasonable opportunity for the introduction and storage of materials and equipment and the execution of such other work, and shall properly coordinate the Work with theirs. Contractor shall do all cutting, fitting, and patching of the Work that may be required to properly connect or otherwise make its several parts come together and properly integrate with such other work. Contractor shall not endanger any work of others by cutting, excavating, or otherwise altering their work and will only cut or alter their work with the written consent of Engineer and the others whose work will be affected. The duties and responsibilities of Contractor under this Paragraph are for the benefit of such utility owners and other contractors to the extent that there are comparable provisions for the benefit of Contractor in said direct contracts between Owner and such utility owners and other contractors.

C. If the proper execution or results of any part of Contractor's Work depends upon work performed by others under this Article 7, Contractor shall inspect such other work and promptly report to Engineer in writing any delays, defects, or deficiencies in such other work that render it unavailable or unsuitable for the proper execution and results of Contractor's Work. Contractor's failure to so report will constitute an acceptance of such other work as fit and proper for integration with Contractor's Work except for latent defects and deficiencies in such other work.

7.02 *Coordination*

A. If Owner intends to contract with others for the performance of other work on the Project at the Site, the following will be set forth in Supplementary Conditions:

1. the individual or entity who will have authority and responsibility for coordination of the activities among the various contractors will be identified;

2. the specific matters to be covered by such authority and responsibility will be itemized; and

3. the extent of such authority and responsibilities will be provided.

B. Unless otherwise provided in the Supplementary Conditions, Owner shall have sole authority and responsibility for such coordination.

7.03 *Legal Relationships*

A. Paragraphs 7.01.A and 7.02 are not applicable for utilities not under the control of Owner.

B. Each other direct contract of Owner under Paragraph 7.01.A shall provide that the other contractor is liable to Owner and Contractor for the reasonable direct delay and disruption costs incurred by Contractor as a result of the other contractor's actions or inactions.

C. Contractor shall be liable to Owner and any other contractor for the reasonable direct delay and disruption costs incurred by such other contractor as a result of Contractor's action or inactions.

ARTICLE 8 - OWNER'S RESPONSIBILITIES

8.01 *Communications to Contractor*

A. Except as otherwise provided in these General Conditions, Owner shall issue all communications to Contractor through Engineer.

8.02 *Replacement of Engineer*

A. In case of termination of the employment of Engineer, Owner shall appoint an engineer to whom Contractor makes no reasonable objection, whose status under the Contract Documents shall be that of the former Engineer.

8.03 *Furnish Data*

A. Owner shall furnish the data required of Owner under the Contract Documents.

8.04 *Pay When Due*

A. Owner shall make payments to Contractor when they are due as provided in Paragraphs 14.02.C and 14.07.C.

8.05 *Lands and Easements; Reports and Tests*

A. Owner's duties in respect of providing lands and easements and providing engineering surveys to establish reference points are set forth in Paragraphs 4.01

Copyright © 2002 National Society of Professional Engineers for EJCDC. All rights reserved.

and 4.05. Paragraph 4.02 refers to Owner's identifying and making available to Contractor copies of reports of explorations and tests of subsurface conditions and drawings of physical conditions in or relating to existing surface or subsurface structures at or contiguous to the Site that have been utilized by Engineer in preparing the Contract Documents.

8.06 *Insurance*

A. Owner's responsibilities, if any, in respect to purchasing and maintaining liability and property insurance are set forth in Article 5.

8.07 *Change Orders*

A. Owner is obligated to execute Change Orders as indicated in Paragraph 10.03.

8.08 *Inspections, Tests, and Approvals*

A. Owner's responsibility in respect to certain inspections, tests, and approvals is set forth in Paragraph 13.03.B.

8.09 *Limitations on Owner's Responsibilities*

A. The Owner shall not supervise, direct, or have control or authority over, nor be responsible for, Contractor's means, methods, techniques, sequences, or procedures of construction, or the safety precautions and programs incident thereto, or for any failure of Contractor to comply with Laws and Regulations applicable to the performance of the Work. Owner will not be responsible for Contractor's failure to perform the Work in accordance with the Contract Documents.

8.10 *Undisclosed Hazardous Environmental Condition*

A. Owner's responsibility in respect to an undisclosed Hazardous Environmental Condition is set forth in Paragraph 4.06.

ARTICLE 9 - ENGINEER'S STATUS DURING CONSTRUCTION

9.01 *Owner's Representative*

A. Engineer will be Owner's representative during the construction period. The duties and responsibilities and the limitations of authority of Engineer as Owner's representative during construction are set forth in the Contract Documents and will not be changed without written consent of Owner and Engineer.

9.02 *Visits to Site*

A. Engineer will make visits to the Site at intervals appropriate to the various stages of construction as Engineer deems necessary in order to observe as an experienced and qualified design professional the progress that has been made and the quality of the various aspects of Contractor's executed Work. Based on information obtained during such visits and observations, Engineer, for the benefit of Owner, will determine, in general, if the Work is proceeding in accordance with the Contract Documents. Engineer will not be required to make exhaustive or continuous inspections on the Site to check the quality or quantity of the Work. Engineer's efforts will be directed toward providing for Owner a greater degree of confidence that the completed Work will conform generally to the Contract Documents. On the basis of such visits and observations, Engineer will keep Owner informed of the progress of the Work and will endeavor to guard Owner against defective Work.

B. Engineer's visits and observations are subject to all the limitations on Engineer's authority and responsibility set forth in Paragraph 9.09. Particularly, but without limitation, during or as a result of Engineer's visits or observations of Contractor's Work Engineer will not supervise, direct, control, or have authority over or be responsible for Contractor's means, methods, techniques, sequences, or procedures of construction, or the safety precautions and programs incident thereto, or for any failure of Contractor to comply with Laws and Regulations applicable to the performance of the Work.

9.03 *Project Representative*

A. If Owner and Engineer agree, Engineer will furnish a Resident Project Representative to assist Engineer in providing more extensive observation of the Work. The authority and responsibilities of any such Resident Project Representative and assistants will be as provided in the Supplementary Conditions, and limitations on the responsibilities thereof will be as provided in Paragraph 9.09. If Owner designates another representative or agent to represent Owner at the Site who is not Engineer's consultant, agent or employee, the responsibilities and authority and limitations thereon of such other individual or entity will be as provided in the Supplementary Conditions.

9.04 *Authorized Variations in Work*

A. Engineer may authorize minor variations in the Work from the requirements of the Contract Documents which do not involve an adjustment in the Contract Price or the Contract Times and are compatible with the design concept of the completed Project as a functioning whole as indicated by the Contract Documents. These may be accomplished by a Field Order and will be binding on Owner and also on Contractor, who shall perform the Work involved promptly. If Owner or

Copyright © 2002 National Society of Professional Engineers for EJCDC. All rights reserved.

Contractor believes that a Field Order justifies an adjustment in the Contract Price or Contract Times, or both, and the parties are unable to agree on entitlement to or on the amount or extent, if any, of any such adjustment, a Claim may be made therefor as provided in Paragraph 10.05.

9.05 *Rejecting Defective Work*

A. Engineer will have authority to reject Work which Engineer believes to be defective, or that Engineer believes will not produce a completed Project that conforms to the Contract Documents or that will prejudice the integrity of the design concept of the completed Project as a functioning whole as indicated by the Contract Documents. The Engineer will obtain on a weekly basis the Contractor's signature on all Field Orders that will contain an acknowledgement by the Contractor that the Field Order does not involve an adjustment in the Contract Price or in the Contract Times.

9.06 *Shop Drawings, Change Orders and Payments*

A. In connection with Engineer's authority, and limitations thereof, as to Shop Drawings and Samples, see Paragraph 6.17.

B. In connection with Engineer's authority, and limitations thereof, as to design calculations and design drawings submitted in response to a delegation of professional design services, if any, see Paragraph 6.21.

C. In connection with Engineer's authority as to Change Orders, see Articles 10, 11, and 12.

D. In connection with Engineer's authority as to Applications for Payment, see Article 14.

9.07 *Determinations for Unit Price Work*

A. Engineer will determine the actual quantities and classifications of Unit Price Work performed by Contractor. Engineer will review with Contractor the Engineer's preliminary determinations on such matters before rendering a written decision thereon (by recommendation of an Application for Payment or otherwise). Engineer's written decision thereon will be final and binding (except as modified by Engineer to reflect changed factual conditions or more accurate data) upon Owner and Contractor, subject to the provisions of Paragraph 10.05.

9.08 *Decisions on Requirements of Contract Documents and Acceptability of Work*

A. Engineer will be the initial interpreter of the requirements of the Contract Documents and judge of the acceptability of the Work thereunder. All matters in question and other matters between Owner and Contractor arising prior to the date final payment is due relating to the acceptability of the Work, and the interpretation of the requirements of the Contract Documents pertaining to the performance of the Work, will be referred initially to Engineer in writing within 30 days of the event giving rise to the question

B. Engineer will, with reasonable promptness, render a written decision on the issue referred. If Owner or Contractor believe that any such decision entitles them to an adjustment in the Contract Price or Contract Times or both, a Claim may be made under Paragraph 10.05. The date of Engineer's decision shall be the date of the event giving rise to the issues referenced for the purposes of Paragraph 10.05.B.

C. Engineer's written decision on the issue referred will be final and binding on Owner and Contractor, subject to the provisions of Paragraph 10.05.

D. When functioning as interpreter and judge under this Paragraph 9.08, Engineer will not show partiality to Owner or Contractor and will not be liable in connection with any interpretation or decision rendered in good faith in such capacity.

9.09 *Limitations on Engineer's Authority and Responsibilities*

A. Neither Engineer's authority or responsibility under this Article 9 or under any other provision of the Contract Documents nor any decision made by Engineer in good faith either to exercise or not exercise such authority or responsibility or the undertaking, exercise, or performance of any authority or responsibility by Engineer shall create, impose, or give rise to any duty in contract, tort, or otherwise owed by Engineer to Contractor, any Subcontractor, any Supplier, any other individual or entity, or to any surety for or employee or agent of any of them.

B. Engineer will not supervise, direct, control, or have authority over or be responsible for Contractor's means, methods, techniques, sequences, or procedures of construction, or the safety precautions and programs incident thereto, or for any failure of Contractor to comply with Laws and Regulations applicable to the performance of the Work. Engineer will not be responsible for Contractor's failure to perform the Work in accordance with the Contract Documents.

C. Engineer will not be responsible for the acts or omissions of Contractor or of any Subcontractor, any Supplier, or of any other individual or entity performing any of the Work.

D. Engineer's review of the final Application for Payment and accompanying documentation and all maintenance and operating instructions, schedules, guarantees, bonds, certificates of inspection, tests and approvals, and other documentation required to be

Copyright © 2002 National Society of Professional Engineers for EJCDC. All rights reserved.

delivered by Paragraph 14.07.A will only be to determine generally that their content complies with the requirements of, and in the case of certificates of inspections, tests, and approvals that the results certified indicate compliance with the Contract Documents.

E. The limitations upon authority and responsibility set forth in this Paragraph 9.09 shall also apply to, the Resident Project Representative, if any, and assistants, if any.

ARTICLE 10 - CHANGES IN THE WORK; CLAIMS

10.01 *Authorized Changes in the Work*

A. Without invalidating the Contract and without notice to any surety, Owner may, at any time or from time to time, order additions, deletions, or revisions in the Work by a Change Order, or a Work Change Directive. Upon receipt of any such document, Contractor shall promptly proceed with the Work involved which will be performed under the applicable conditions of the Contract Documents (except as otherwise specifically provided). A change in the Contract Price or the Contract Times shall be accomplished only be written Amendment, a written Change Order, or a written Work Change Directive. Accordingly, no course of conduct or dealings between the parties, no expressed or implied acceptance of alterations or additions to the Work, and no claim that the Owner has been unjustly enriched by any alterations or additions to the Work shall be the basis of any claim for an increase in any amount due under the Contract Documents or a change in any time period provided for in the Contract Documents.

B. If Owner and Contractor are unable to agree on entitlement to, or on the amount or extent, if any, of an adjustment in the Contract Price or Contract Times, or both, that should be allowed as a result of a Work Change Directive, a Claim may be made therefor as provided in Paragraph 10.05.

10.02 *Unauthorized Changes in the Work*

A. Contractor shall not be entitled to an increase in the Contract Price or an extension of the Contract Times with respect to any work performed that is not required by the Contract Documents as amended, modified, or supplemented as provided in Paragraph 3.04, except in the case of an emergency as provided in Paragraph 6.16 or in the case of uncovering Work as provided in Paragraph 13.04.B.

10.03 *Execution of Change Orders*

A. Owner and Contractor shall execute appropriate Change Orders recommended by Engineer covering:

1. changes in the Work which are: (i) ordered by Owner pursuant to Paragraph 10.01.A, (ii) required because of acceptance of defective Work under Paragraph 13.08.A or Owner's correction of defective Work under Paragraph 13.09, or (iii) agreed to by the parties;

2. changes in the Contract Price or Contract Times which are agreed to by the parties, including any undisputed sum or amount of time for Work actually performed in accordance with a Work Change Directive; and

3. changes in the Contract Price or Contract Times which embody the substance of any written decision rendered by Engineer pursuant to Paragraph 10.05; provided that, in lieu of executing any such Change Order, an appeal may be taken from any such decision in accordance with the provisions of the Contract Documents and applicable Laws and Regulations, but during any such appeal, Contractor shall carry on the Work and adhere to the Progress Schedule as provided in Paragraph 6.18.A.

Agreements on any Change Order shall constitute a final settlement of all matters relating to the change in the Work that is the subject of a Change Order, including, but not limited to, all direct and indirect costs associated with such change and any and all adjustments to the Contract Price and the Contract Times. In the event a Change Order increases the Contract Price, the Contractor shall include the Work covered by such Change Order in Applications for Payment as if such Work were originally part of the Contract Documents.

10.04 *Notification to Surety*

A. If notice of any change affecting the general scope of the Work or the provisions of the Contract Documents (including, but not limited to, Contract Price or Contract Times) is required by the provisions of any bond to be given to a surety, the giving of any such notice will be Contractor's responsibility. The amount of each applicable bond will be adjusted to reflect the effect of any such change.

10.05 *Claims*

A. *Engineer's Decision Required*: All Claims, except those waived pursuant to Paragraph 14.09, shall be referred to the Engineer for decision. A decision by Engineer shall be required as a condition precedent to any exercise by Owner or Contractor of any rights or remedies either may otherwise have under the Contract Documents or by Laws and Regulations in respect of such Claims.

B. *Notice:* Written notice stating the general nature of each Claim, shall be delivered by the claimant to Engineer and the other party to the Contract promptly (but in no event later than 30 days) after the start of the event giving rise thereto. The responsibility to substantiate a

Copyright © 2002 National Society of Professional Engineers for EJCDC. All rights reserved.

Claim shall rest with the party making the Claim. Notice of the amount or extent of the Claim, with supporting data shall be delivered to the Engineer and the other party to the Contract within 60 days after the start of such event (unless Engineer allows additional time for claimant to submit additional or more accurate data in support of such Claim). A Claim for an adjustment in Contract Price shall be prepared in accordance with the provisions of Paragraph 12.01.B. A Claim for an adjustment in Contract Time shall be prepared in accordance with the provisions of Paragraph 12.02.B. Each Claim shall be accompanied by claimant's written statement that the adjustment claimed is the entire adjustment to which the claimant believes it is entitled as a result of said event. The opposing party shall submit any response to Engineer and the claimant within 30 days after receipt of the claimant's last submittal (unless Engineer allows additional time).

C. *Engineer's Action*: Engineer will review each Claim and, within 30 days after receipt of the last submittal of the claimant or the last submittal of the opposing party, if any, take one of the following actions in writing:

1. deny the Claim in whole or in part,

2. approve the Claim, or

3. notify the parties that the Engineer is unable to resolve the Claim if, in the Engineer's sole discretion, it would be inappropriate for the Engineer to do so. For purposes of further resolution of the Claim, such notice shall be deemed a denial.

D. In the event that Engineer does not take action on a Claim within said 30 days, the Claim shall be deemed denied.

E. Engineer's written action under Paragraph 10.05.C or denial pursuant to Paragraphs 10.05.C.3 or 10.05.D will be final and binding upon Owner and Contractor, unless Owner or Contractor invoke the dispute resolution procedure set forth in Article 16 within 30 days of such action or denial.

F. No Claim for an adjustment in Contract Price or Contract Times will be valid if not submitted in accordance with this Paragraph 10.05.

G. In calculating the amount of any claim or measure of damages for breach of contract (such provision to survive any termination of following such breach), the following standards shall apply:

1. No indirect or consequential damages will be allowed;

2. No recovery shall be based on a comparison of planned expenditures to total actual expenditures, or on estimated losses of labor efficiency, or on a comparison pf planned manloading to actual manloading, or any other analysis that is used to show damages indirectly;

3. Damages are limited to extra costs specifically shown to have been directly caused by a proven wrong;

4. No damages shall be allowed for delay;

5. No damages will be allowed for home office overhead or other home office charges or any Eichleay formula calculation; and

6. No profit will be allowed on any damage claim.

ARTICLE 11 - COST OF THE WORK; ALLOWANCES; UNIT PRICE WORK

11.01 *Cost of the Work*

A. *Costs Included:* The term Cost of the Work means the sum of all costs, except those excluded in Paragraph 11.01.B, necessarily incurred and paid by Contractor in the proper performance of the Work. When the value of any Work covered by a Change Order or when a Claim for an adjustment in Contract Price is determined on the basis of Cost of the Work, the costs to be reimbursed to Contractor will be only those additional or incremental costs required because of the change in the Work or because of the event giving rise to the Claim. Except as otherwise may be agreed to in writing by Owner, such costs shall be in amounts no higher than those prevailing in the locality of the Project, shall include only the following items, and shall not include any of the costs itemized in Paragraph 11.01.B.

1. Payroll costs for employees in the direct employ of Contractor in the performance of the Work under schedules of job classifications agreed upon by Owner and Contractor. Such employees shall include, without limitation, superintendents, foremen, and other personnel employed full time at the Site. Payroll costs for employees not employed full time on the Work shall be apportioned on the basis of their time spent on the Work. Payroll costs shall include, but not be limited to, salaries and wages plus the cost of fringe benefits, which shall include social security contributions, unemployment, excise, and payroll taxes, workers' compensation, health and retirement benefits, bonuses, sick leave, vacation and holiday pay applicable thereto. The expenses of performing Work outside of regular working hours, on Saturday, Sunday, or legal holidays, shall be included in the above to the extent authorized in writing by Owner.

2. Cost of all materials and equipment furnished and incorporated in the Work, including costs of transportation and storage thereof, and Suppliers' field services required in connection therewith. All cash

Copyright © 2002 National Society of Professional Engineers for EJCDC. All rights reserved.

discounts shall accrue to Contractor unless Owner deposits funds with Contractor with which to make payments, in which case the cash discounts shall accrue to Owner. All trade discounts, rebates and refunds and returns from sale of surplus materials and equipment shall accrue to Owner, and Contractor shall make provisions so that they may be obtained.

3. Payments made by Contractor to Subcontractors for Work performed by Subcontractors. If required by Owner, Contractor shall obtain competitive bids from subcontractors acceptable to Owner and Contractor and shall deliver such bids to Owner, who will then determine, with the advice of Engineer, which bids, if any, will be acceptable. If any subcontract provides that the Subcontractor is to be paid on the basis of Cost of the Work plus a fee, the Subcontractor's Cost of the Work and fee shall be determined in the same manner as Contractor's Cost of the Work and fee as provided in this Paragraph 11.01.

4. Costs of special consultants (including but not limited to Engineers, architects, testing laboratories, surveyors, attorneys, and accountants) employed for services specifically related to the Work, but only to the extent authorized and approved in writing by Owner and Engineer.

5. Supplemental costs including the following:

a. The proportion of necessary transportation, travel, and subsistence expenses of Contractor's employees incurred in discharge of duties connected with the Work.

b. Cost, including transportation and maintenance, of all materials, supplies, equipment, machinery, appliances, office, and temporary facilities at the Site, and hand tools not owned by the workers, which are consumed in the performance of the Work, and cost, less market value, of such items used but not consumed which remain the property of Contractor.

c. Rentals of all construction equipment and machinery, and the parts thereof whether rented from Contractor or others in accordance with rental agreements approved by Owner with the advice of Engineer, and the costs of transportation, loading, unloading, assembly, dismantling, and removal thereof. All such costs shall be in accordance with the terms of said rental agreements. The rental of any such equipment, machinery, or parts shall cease when the use thereof is no longer necessary for the Work.

d. Sales, consumer, use, and other similar taxes related to the Work, and for which Contractor is liable, imposed by Laws and Regulations.

e. Deposits lost for causes other than negligence of Contractor, any Subcontractor, or anyone directly or indirectly employed by any of them or for whose acts any of them may be liable, and royalty payments and fees for permits and licenses.

f. Losses and damages (and related expenses) caused by damage to the Work, not compensated by insurance or otherwise, sustained by Contractor in connection with the performance of the Work (except losses and damages within the deductible amounts of property insurance established in accordance with Paragraph 5.06.D), provided such losses and damages have resulted from causes other than the negligence of Contractor, any Subcontractor, or anyone directly or indirectly employed by any of them or for whose acts any of them may be liable. Such losses shall include settlements made with the written consent and approval of Owner. No such losses, damages, and expenses shall be included in the Cost of the Work for the purpose of determining Contractor's fee.

g. The cost of utilities, fuel, and sanitary facilities at the Site.

h. Minor expenses such as telegrams, long distance telephone calls, telephone service at the Site, expresses, and similar petty cash items in connection with the Work.

i. The costs of premiums for all bonds and insurance Contractor is required by the Contract Documents to purchase and maintain.

B. *Costs Excluded:* The term Cost of the Work shall not include any of the following items:

1. Payroll costs and other compensation of Contractor's officers, executives, principals (of partnerships and sole proprietorships), general managers, safety managers, engineers, architects, estimators, attorneys, auditors, accountants, purchasing and contracting agents, expediters, timekeepers, clerks, and other personnel employed by Contractor, whether at the Site or in Contractor's principal or branch office for general administration of the Work and not specifically included in the agreed upon schedule of job classifications referred to in Paragraph 11.01.A.1 or specifically covered by Paragraph 11.01.A.4, all of which are to be considered administrative costs covered by the Contractor's fee.

2. Expenses of Contractor's principal and branch offices other than Contractor's office at the Site.

3. Any part of Contractor's capital expenses, including interest on Contractor's capital employed for the Work and charges against Contractor for delinquent payments.

4. Costs due to the negligence of Contractor, any Subcontractor, or anyone directly or indirectly employed by any of them or for whose acts any of them may be liable, including but not limited to, the correction of

Copyright © 2002 National Society of Professional Engineers for EJCDC. All rights reserved.

defective Work, disposal of materials or equipment wrongly supplied, and making good any damage to property.

5. Other overhead or general expense costs of any kind and the costs of any item not specifically and expressly included in Paragraphs 11.01.A and 11.01.B.

C. *Contractor's Fee:* When all the Work is performed on the basis of cost-plus, Contractor's fee shall be determined as set forth in the Agreement. When the value of any Work covered by a Change Order or when a Claim for an adjustment in Contract Price is determined on the basis of Cost of the Work, Contractor's fee shall be determined as set forth in Paragraph 12.01.C.

D. *Documentation:* Whenever the Cost of the Work for any purpose is to be determined pursuant to Paragraphs 11.01.A and 11.01.B, Contractor will establish and maintain records thereof in accordance with generally accepted accounting practices and submit in a form acceptable to Engineer an itemized cost breakdown together with supporting data.

E. *Pricing Information Requirements:* The Contractor agrees to provide and require all Subcontractors to provide a breakdown of allowable labor and labor burden cost information as outlined herein. This information will be used to evaluate the potential cost of labor and labor burden related to Change Order Work. It is intended that this information represent an accurate estimate of the Contractor's actual labor and labor burden cost components. This information is not intended to establish fixed billing or Change Order pricing labor rates. However, at the time Change Orders are priced the submitted cost data for labor rates may be used to price Change Order Work. The accuracy of any such agreed-upon labor cost components used to price Change Orders will be subject to later audit. Approved Change Order amounts may be adjusted later to correct the impact of inaccurate labor cost components if the agreed-upon labor cost components are determined to be inaccurate.

11.02 *Allowances*

A. It is understood that Contractor has included in the Contract Price all allowances so named in the Contract Documents and shall cause the Work so covered to be performed for such sums and by such persons or entities as may be acceptable to Owner and Engineer.

B. Cash Allowances

1. Contractor agrees that:

a. the cash allowances include the cost to Contractor (less any applicable trade discounts) of materials and equipment required by the allowances to be delivered at the Site, and all applicable taxes; and

b. Contractor's costs for unloading and handling on the Site, labor, installation , overhead, profit, and other expenses contemplated for the cash allowances have been included in the Contract Price and not in the allowances, and no demand for additional payment on account of any of the foregoing will be valid.

C. Contingency Allowance

1. Contractor agrees that a contingency allowance, if any, is for the sole use of Owner to cover unanticipated costs.

D. Prior to final payment, an appropriate Change Order will be issued as recommended by Engineer to reflect actual amounts due Contractor on account of Work covered by allowances, and the Contract Price shall be correspondingly adjusted.

11.03 *Unit Price Work*

A. Where the Contract Documents provide that all or part of the Work is to be Unit Price Work, initially the Contract Price will be deemed to include for all Unit Price Work an amount equal to the sum of the unit price for each separately identified item of Unit Price Work times the estimated quantity of each item as indicated in the Agreement.

B. The estimated quantities of items of Unit Price Work are not guaranteed and are solely for the purpose of comparison of Bids and determining an initial Contract Price. Determinations of the actual quantities and classifications of Unit Price Work performed by Contractor will be made by Engineer subject to the provisions of Paragraph 9.07.

C. Each unit price will be deemed to include an amount considered by Contractor to be adequate to cover Contractor's overhead and profit for each separately identified item.

D. When "plan quantity" is indicated for a bid item, the Contractor shall be paid the amount specified in the Contract Documents without any measurements.

E. A Major Item is any individual bid item in the Bid that has a total cost equal to or greater than five percent (5%) of the original Contract Amount or $50,000, whichever is greater, computed on the basis of bid quantities and Contract unit prices.

F. The Owner or the Contractor may make a Claim for an adjustment in the Contract Amount if:

1. the actual quantity of any Major Item should become as much as twenty percent (20%) more than or twenty percent (20%) less than in the Bid; or

Copyright © 2002 National Society of Professional Engineers for EJCDC. All rights reserved.

2. The Contractor presents proper documentation contesting the accuracy of "plan quantity," and Owner's Representative verifies quantity and determines original quantity is in error by five percent (5%) or more.

ARTICLE 12 - CHANGE OF CONTRACT PRICE; CHANGE OF CONTRACT TIMES

12.01 *Change of Contract Price*

A. The Contract Price may only be changed by a Change Order.

1. If the total of amount of all Change Orders, in the aggregate, involves a decrease or an increase of more than $25,000, no Change Order shall be valid unless it is approved by the City Council of the City of Georgetown. The original Contract Price may not be increased by more than twenty-five percent (25%) under any circumstances and it may not be decreased more than twenty-five percent (25%) without the consent of the Contractor to such decrease.

2. Any claim for an adjustment in the Contract Amount shall be made by Written Notice delivered by the party making the Claim to the other party promptly (but in no event later than thirty (30) calendar days) after the start of the occurrence or event giving rise to the Claim and stating the general nature of the Claim, but in any case before proceeding to execute the work considered to be additional costs (except for Emergencies as described in Article 6). Notice of the amount of the Claim with supporting data shall be delivered within thirty (30) calendar days after Written Notice of Claim is delivered by claimant, and shall represent that the adjustment claimed covers all known amounts to which claimant is entitled as a result of said occurrence or event.

B. The value of any Work covered by a Change Order or of any Claim for an adjustment in the Contract Price will be determined as follows:

1. where the Work involved is covered by unit prices contained in the Contract Documents, by application of such unit prices to the quantities of the items involved (subject to the provisions of Paragraph 11.03); or

2. where the Work involved is not covered by unit prices contained in the Contract Documents, by a mutually agreed lump sum (which may include an allowance for overhead and profit not necessarily in accordance with Paragraph 12.01.C.2); or

3. where the Work involved is not covered by unit prices contained in the Contract Documents and agreement to a lump sum is not reached under Paragraph 12.01.B.2, on the basis of the Cost of the Work (determined as provided in Paragraph 11.01) plus a Contractor's fee for overhead and profit (determined as provided in Paragraph 12.01.C).

C. *Contractor's Fee:* The Contractor's fee for overhead and profit shall be determined as follows:

1. a mutually acceptable fixed fee; or

2. if a fixed fee is not agreed upon, then a fee based on the following percentages of the various portions of the Cost of the Work:

a. for costs incurred under Paragraphs 11.01.A.1 and 11.01.A.2, the Contractor's fee shall be 10 percent;

b. for costs incurred under Paragraph 11.01.A.3, the Contractor's fee shall be five percent;

c. where one or more tiers of subcontracts are on the basis of Cost of the Work plus a fee and no fixed fee is agreed upon, the intent of Paragraph 12.01.C.2.a is that the Subcontractor who actually performs the Work, at whatever tier, will be paid a fee of 10 percent of the costs incurred by such Subcontractor under Paragraphs 11.01.A.1 and 11.01.A.2 and that any higher tier Subcontractor and Contractor will each be paid a fee of five percent of the amount paid to the next lower tier Subcontractor;

d. no fee shall be payable on the basis of costs itemized under Paragraphs 11.01.A.4, 11.01.A.5, and 11.01.B;

e. the amount of credit to be allowed by Contractor to Owner for any change which results in a net decrease in cost will be the amount of the actual net decrease in cost plus a deduction in Contractor's fee by an amount equal to five percent of such net decrease; and

f. when both additions and credits are involved in any one change, the adjustment in Contractor's fee shall be computed on the basis of the net change in accordance with Paragraphs 12.01.C.2.a through 12.01.C.2.e, inclusive.

12.02 *Change of Contract Times*

A. The Contract Times may only be changed by a Change Order. Any Claim for an adjustment in the Contract Times shall be based on written notice submitted by the party making the Claim to the Engineer and the other party to the Contract in accordance with the provisions of Paragraph 10.05.

Copyright © 2002 National Society of Professional Engineers for EJCDC. All rights reserved.

B. Any adjustment of the Contract Times covered by a Change Order or any Claim for an adjustment in the Contract Times will be determined in accordance with the provisions of this Article 12.

C. All time limits stated in the Contract Documents are of the essence of the Agreement. The Contractor acknowledges and understands that failure by the Contractor to complete the Work in accordance with the construction schedule will cause significant damages to the Owner, and subject Contractor to Liquidated Damages as stated in the Agreement.

12.03 *Delays*

A. Where Contractor is prevented from completing any part of the Work within the Contract Times due to delay beyond the control of Contractor, the Contract Times will be extended in an amount equal to the time lost due to such delay if a Claim is made therefor as provided in Paragraph 12.02.A. Delays beyond the control of Contractor shall include, but not be limited to, acts or neglect by Owner, acts or neglect of utility owners or other contractors performing other work as contemplated by Article 7, fires, floods, epidemics, abnormal weather conditions, or acts of God.

B. If Owner, Engineer, or other contractors or utility owners performing other work for Owner as contemplated by Article 7, or anyone for whom Owner is responsible, delays, disrupts, or interferes with the performance or progress of the Work, then Contractor shall be entitled to an equitable adjustment in the Contract Price or the Contract Times, or both. Contractor's entitlement to an adjustment of the Contract Times is conditioned on such adjustment being essential to Contractor's ability to complete the Work within the Contract Times.

C If Contractor is delayed in the performance or progress of the Work by fire, flood, epidemic, abnormal weather conditions, acts of God, acts or failures to act of utility owners not under the control of Owner, or other causes not the fault of and beyond control of Owner and Contractor, then Contractor shall be entitled to an equitable adjustment in Contract Times, if such adjustment is essential to Contractor's ability to complete the Work within the Contract Times. Such an adjustment shall be Contractor's sole and exclusive remedy for the delays described in this Paragraph 12.03.C.

D. Owner, Engineer and the Related Entities of each of them shall not be liable to Contractor for any claims, costs, losses, or damages (including but not limited to all fees and charges of Engineers, architects, attorneys, and other professionals and all court or arbitration or other dispute resolution costs) sustained by Contractor on or in connection with any other project or anticipated project.

E. Contractor shall not be entitled to an adjustment in Contract Price or Contract Times for delays within the control of Contractor. Delays attributable to and within the control of a Subcontractor or Supplier shall be deemed to be delays within the control of Contractor.

F. Notwithstanding anything to the contrary in the Contract Documents, an extension in the Contract Times, to the extent permitted under Paragraphs 12.02 and 12.03, shall be the sole and exclusive remedy of the Contractor for any (1) delay in the commencement, prosecution, or completion of the Work; (2) hindrance or obstruction in the performance of the Work; (3) loss of productivity; or (4) other similar claims (collectively referred to in this paragraph as "Delays") whether or not such Delays are foreseeable. In no event shall the Contractor be entitled to any compensation or recovery of any damages, in connection with any Delay, including, without limitation, consequential damages, lost opportunity costs, impact damages, or other similar remuneration. The Owner's exercise of any of its rights or remedies under the Contract Documents (including, without limitation, ordering changes in the Work, directing suspension, rescheduling, or correction of the Work, or terminating this Agreement for its convenience), regardless of the extent or frequency of the Owner's exercise of such rights or remedies, shall not be construed as active interference with the Contractor's performance of the Work. If the Contractor submits a progress report indicating, or otherwise expressing an intention to achieve, completion of the Work prior to any completion date required by the Contract Documents or expiration of the Contract Time, no liability of the Owner to the Contractor for any failure of the Contractor to so complete the Work shall be created or implied.

G. Under a Calendar Day Contract, the Contractor may also be granted an extension of time because of unusual inclement weather that is beyond the normal weather expected for the Georgetown, Texas area. Normal weather which prevents the Contractor from performing Work is expected during a Calendar Day Contract, and is <u>not</u> a justification for an extension of time. The following delineates the number of days per month for which, for purposes of Calendar Day Contracts, expected normal weather will prevent performance of Work:

January.....	7 days
February.....	7 days
March.....	7 days
April.....	7 days
May.....	8 days
June.....	6 days
July.....	6 days
August.....	5 days
September.....	7 days
October.....	7 days
November.....	7 days
December.....	7 days

Copyright © 2002 National Society of Professional Engineers for EJCDC. All rights reserved.

Days per month exceeding the number shown above may be credited as Rain Days if a Claim is made in accordance with this Article 12 and meets the following definition: a "Rain Day" is any day in which a weather event occurs at the site and is sufficient to prevent the Contractor from performing units of Work critical to maintaining the Progress Schedule.

ARTICLE 13 - TESTS AND INSPECTIONS; CORRECTION, REMOVAL OR ACCEPTANCE OF DEFECTIVE WORK

13.01 *Notice of Defects*

A. Prompt notice of all defective Work of which Owner or Engineer has actual knowledge will be given to Contractor. All defective Work may be rejected, corrected, or accepted as provided in this Article 13.

13.02 *Access to Work*

A. Owner, Engineer, their consultants and other representatives and personnel of Owner, independent testing laboratories, and governmental agencies with jurisdictional interests will have access to the Site and the Work at reasonable times for their observation, inspecting, and testing. Contractor shall provide them proper and safe conditions for such access and advise them of Contractor's Site safety procedures and programs so that they may comply therewith as applicable.

13.03 *Tests and Inspections*

A. Contractor shall give Engineer timely notice of readiness of the Work for all required inspections, tests, or approvals and shall cooperate with inspection and testing personnel to facilitate required inspections or tests.

B. Owner shall employ and pay for the services of an independent testing laboratory to perform all inspections, tests, or approvals required by the Contract Documents except:

1. for inspections, tests, or approvals covered by Paragraphs 13.03.C and 13.03.D below;

2. that costs incurred in connection with tests or inspections conducted pursuant to Paragraph 13.04.B shall be paid as provided in said Paragraph 13.04.C; and

3. as otherwise specifically provided in the Contract Documents.

C. If Laws or Regulations of any public body having jurisdiction require any Work (or part thereof) specifically to be inspected, tested, or approved by an employee or other representative of such public body, Contractor shall assume full responsibility for arranging and obtaining such inspections, tests, or approvals, pay all costs in connection therewith, and furnish Engineer the required certificates of inspection or approval.

D. Contractor shall be responsible for arranging and obtaining and shall pay all costs in connection with any inspections, tests, or approvals required for Owner's and Engineer's acceptance of materials or equipment to be incorporated in the Work; or acceptance of materials, mix designs, or equipment submitted for approval prior to Contractor's purchase thereof for incorporation in the Work. Such inspections, tests, or approvals shall be performed by organizations acceptable to Owner and Engineer.

E. If any Work (or the work of others) that is to be inspected, tested, or approved is covered by Contractor without written concurrence of Engineer, it must, if requested by Engineer, be uncovered for observation.

F. Uncovering Work as provided in Paragraph 13.03.E shall be at Contractor's expense unless Contractor has given Engineer timely notice of Contractor's intention to cover the same and Engineer has not acted in the time set forth in the Contractor's notice.

13.04 *Uncovering Work*

A. If any Work is covered contrary to the written request of Engineer, it must, if requested by Engineer, be uncovered for Engineer's observation and replaced at Contractor's expense.

B. If Engineer considers it necessary or advisable that covered Work be observed by Engineer or inspected or tested by others, Contractor, at Engineer's request, shall uncover, expose, or otherwise make available for observation, inspection, or testing as Engineer may require, that portion of the Work in question, furnishing all necessary labor, material, and equipment.

C. If it is found that the uncovered Work is defective, Contractor shall pay all claims, costs, losses, and damages (including but not limited to all fees and charges of engineers, architects, attorneys, and other professionals and all court or arbitration or other dispute resolution costs) arising out of or relating to such uncovering, exposure, observation, inspection, and testing, and of satisfactory replacement or reconstruction (including but not limited to all costs of repair or replacement of work of others), unless the Contractor fails to provide written notice as required by Paragraph 13.03.F; and Owner shall be entitled to an appropriate decrease in the Contract Price. If the parties are unable to agree as to the amount thereof, Owner may make a Claim therefor as provided in Paragraph 10.05.

D. If, the uncovered Work is not found to be defective, Contractor shall be allowed an increase in the Contract Price or an extension of the Contract Times, or both, directly attributable to such uncovering, exposure,

Copyright © 2002 National Society of Professional Engineers for EJCDC. All rights reserved.

observation, inspection, testing, replacement, and reconstruction. If the parties are unable to agree as to the amount or extent thereof, Contractor may make a Claim therefor as provided in Paragraph 10.05.

13.05 *Owner May Stop the Work*

A. If the Work is defective, or Contractor fails to supply sufficient skilled workers or suitable materials or equipment, or fails to perform the Work in such a way that the completed Work will conform to the Contract Documents, Owner may order Contractor to stop the Work, or any portion thereof, until the cause for such order has been eliminated; however, this right of Owner to stop the Work shall not give rise to any duty on the part of Owner to exercise this right for the benefit of Contractor, any Subcontractor, any Supplier, any other individual or entity, or any surety for, or employee or agent of any of them.

13.06 *Correction or Removal of Defective Work*

A. Promptly after receipt of notice, Contractor shall correct all defective Work, whether or not fabricated, installed, or completed, or, if the Work has been rejected by Engineer, remove it from the Project and replace it with Work that is not defective. Contractor shall pay all claims, costs, losses, and damages (including but not limited to all fees and charges of engineers, architects, attorneys, and other professionals and all court or arbitration or other dispute resolution costs) arising out of or relating to such correction or removal (including but not limited to all costs of repair or replacement of work of others).

B. When correcting defective Work under the terms of this Paragraph 13.06 or Paragraph 13.07, Contractor shall take no action that would void or otherwise impair Owner's special warranty and guarantee, if any, on said Work.

13.07 *Correction Period*

A. If within one year after the date of Substantial Completion (or such longer period of time as may be prescribed by the terms of any applicable special guarantee required by the Contract Documents) or by any specific provision of the Contract Documents, any Work is found to be defective, or if the repair of any damages to the land or areas made available for Contractor's use by Owner or permitted by Laws and Regulations as contemplated in Paragraph 6.11.A is found to be defective, Contractor shall promptly, without cost to Owner and in accordance with Owner's written instructions:

1. repair such defective land or areas; or

2. correct such defective Work; or

3. if the defective Work has been rejected by Owner, remove it from the Project and replace it with Work that is not defective, and

4. satisfactorily correct or repair or remove and replace any damage to other Work, to the work of others or other land or areas resulting therefrom.

B. If Contractor does not promptly comply with the terms of Owner's written instructions, or in an emergency where delay would cause serious risk of loss or damage, Owner may have the defective Work corrected or repaired or may have the rejected Work removed and replaced. All claims, costs, losses, and damages (including but not limited to all fees and charges of engineers, architects, attorneys, and other professionals and all court or arbitration or other dispute resolution costs) arising out of or relating to such correction or repair or such removal and replacement (including but not limited to all costs of repair or replacement of work of others) will be paid by Contractor.

C. In special circumstances where a particular item of equipment is placed in continuous service for the benefit of the Owner before Substantial Completion of all the Work, the correction period for that item may start to run from an earlier date if so provided in the Specifications.

D. Where defective Work (and damage to other Work resulting therefrom) has been corrected or removed and replaced under this Paragraph 13.07, the correction period hereunder with respect to such Work will be extended for an additional period of one year after such correction or removal and replacement has been satisfactorily completed.

E. Contractor's obligations under this Paragraph 13.07 are in addition to any other obligation or warranty. The provisions of this Paragraph 13.07 shall not be construed as a substitute for or a waiver of the provisions of any applicable statute of limitation or repose.

13.08 *Acceptance of Defective Work*

A. If, instead of requiring correction or removal and replacement of defective Work, Owner (and, prior to Engineer's recommendation of final payment, Engineer) prefers to accept it, Owner may do so. Contractor shall pay all claims, costs, losses, and damages (including but not limited to all fees and charges of engineers, architects, attorneys, and other professionals and all court or arbitration or other dispute resolution costs) attributable to Owner's evaluation of and determination to accept such defective Work (such costs to be approved by Engineer as to reasonableness) and the diminished value of the Work to the extent not otherwise paid by Contractor pursuant to this sentence. If any such acceptance occurs prior to Engineer's recommendation of final payment, a Change Order will be issued incorporating the necessary revisions

Copyright © 2002 National Society of Professional Engineers for EJCDC. All rights reserved.

in the Contract Documents with respect to the Work, and Owner shall be entitled to an appropriate decrease in the Contract Price, reflecting the diminished value of Work so accepted. If the parties are unable to agree as to the amount thereof, Owner may make a Claim therefor as provided in Paragraph 10.05. If the acceptance occurs after such recommendation, an appropriate amount will be paid by Contractor to Owner.

13.09 *Owner May Correct Defective Work*

A. If Contractor fails within a reasonable time after written notice from Engineer to correct defective Work or to remove and replace rejected Work as required by Engineer in accordance with Paragraph 13.06.A, or if Contractor fails to perform the Work in accordance with the Contract Documents, or if Contractor fails to comply with any other provision of the Contract Documents, Owner may, after seven days written notice to Contractor, correct or remedy any such deficiency.

B. In exercising the rights and remedies under this Paragraph 13.09, Owner shall proceed expeditiously. In connection with such corrective or remedial action, Owner may exclude Contractor from all or part of the Site, take possession of all or part of the Work and suspend Contractor's services related thereto, take possession of Contractor's tools, appliances, construction equipment and machinery at the Site, and incorporate in the Work all materials and equipment stored at the Site or for which Owner has paid Contractor but which are stored elsewhere. Contractor shall allow Owner, Owner's representatives, agents and employees, Owner's other contractors, and Engineer and Engineer's consultants access to the Site to enable Owner to exercise the rights and remedies under this Paragraph.

C. All claims, costs, losses, and damages (including but not limited to all fees and charges of engineers, architects, attorneys, and other professionals and all court or arbitration or other dispute resolution costs) incurred or sustained by Owner in exercising the rights and remedies under this Paragraph 13.09 will be charged against Contractor, and a Change Order will be issued incorporating the necessary revisions in the Contract Documents with respect to the Work; and Owner shall be entitled to an appropriate decrease in the Contract Price. If the parties are unable to agree as to the amount of the adjustment, Owner may make a Claim therefor as provided in Paragraph 10.05. Such claims, costs, losses and damages will include but not be limited to all costs of repair, or replacement of work of others destroyed or damaged by correction, removal, or replacement of Contractor's defective Work.

D. Contractor shall not be allowed an extension of the Contract Times because of any delay in the performance of the Work attributable to the exercise by Owner of Owner's rights and remedies under this Paragraph 13.09.

ARTICLE 14 - PAYMENTS TO CONTRACTOR AND COMPLETION

14.01 *Schedule of Values*

A. The Schedule of Values established as provided in Paragraph 2.07.A will serve as the basis for progress payments and will be incorporated into a form of Application for Payment acceptable to Engineer. Progress payments on account of Unit Price Work will be based on the number of units completed.

14.02 *Progress Payments*

A. Applications for Payments

1. At least 20 days before the date established in the Agreement for each progress payment (but not more often than once a month), Contractor shall submit to Engineer for review an Application for Payment filled out and signed by Contractor covering the Work completed as of the date of the Application and accompanied by such supporting documentation as is required by the Contract Documents. If payment is requested on the basis of materials and equipment not incorporated in the Work but delivered and suitably stored at the Site or at another location agreed to in writing, the Application for Payment shall also be accompanied by a bill of sale, invoice, or other documentation warranting that Owner has received the materials and equipment free and clear of all Liens and evidence that the materials and equipment are covered by appropriate property insurance or other arrangements to protect Owner's interest therein, all of which must be satisfactory to Owner.

2. Beginning with the second Application for Payment, each Application shall include an affidavit of Contractor stating that all previous progress payments received on account of the Work have been applied on account to discharge Contractor's legitimate obligations associated with prior Applications for Payment.

3. The OWNER will pay to the CONTRACTOR the total amount of approved Application for Payment, less five percent (5%) of the amount thereof, which five percent (5%) or the highest maximum amount of retainage as may be allowed under Government Code Chapter 2253 will be retained until thirty (30) days after Final Completion of the Work, less all previous payments and less all sums that may be retained by the OWNER under the terms of this Contract. The CONTRACTOR, at the OWNER'S option, may be relieved of the obligation to complete the Work and, thereupon, the CONTRACTOR shall receive payment of the balance due under the Contract subject to the conditions stated under paragraph 15.2.

.

Copyright © 2002 National Society of Professional Engineers for EJCDC. All rights reserved.

4. Each application for payment shall be accompanied by the following, all in form and substance satisfactory to the Owner:

a. A current Contractor's lien waiver and duly executed and acknowledged sworn statement showing all Subcontractors and material suppliers with whom the Contractor has entered into Subcontracts, the amount of each such Subcontract, the amount requested for any Subcontractor and material supplier in the requested progress payment, and the amount to be paid to the Contractor from such progress payment, together with similar sworn statements from all such Subcontractors and material suppliers;

b. Duly executed waivers of mechanics' and material suppliers' liens from all Subcontractors and, when appropriate, from material suppliers and lower-tier Subcontractors establishing payment or satisfaction of payment of all amounts requested by the Contractor on behalf of such entities or persons in any previous application for payment;

c. updated Progress Schedule;

d. monthly subcontractor report;

e. Contractor's estimate of the amount of the Work performed, labor furnished, and materials included in the Work using the agreed schedule of values; and

f. any other documentation required under the Supplementary Conditions or elsewhere in the Contract Documents; and

g. All information and materials required to comply with the requirements of the Contract Documents or reasonably requested by the Owner or the Engineer.

5. The Contractor shall also comply with the following specific requirements:

a. With each application for payment, the Contractor shall submit to the Owner a written list identifying each location where materials are stored off the project site and the value of the materials at each location. The Contractor shall procure insurance satisfactory to the Owner for material stored off the project site in an amount not less than the total value thereof.

b. The consent of any surety shall be obtained to the extent required prior to payment for any materials stored off the project site.

B. *Review of Applications*

1. Engineer will, within 10 days after receipt of each Application for Payment, either indicate in writing a recommendation of payment and present the Application to Owner or return the Application to Contractor indicating in writing Engineer's reasons for refusing to recommend payment. In the latter case, Contractor may make the necessary corrections and resubmit the Application.

2. Engineer's recommendation of any payment requested in an Application for Payment will constitute a representation by Engineer to Owner, based on Engineer's observations on the Site of the executed Work as an experienced and qualified design professional and on Engineer's review of the Application for Payment and the accompanying data and schedules, that to the best of Engineer's knowledge, information and belief:

a. the Work has progressed to the point indicated;

b. the quality of the Work is generally in accordance with the Contract Documents (subject to an evaluation of the Work as a functioning whole prior to or upon Substantial Completion, to the results of any subsequent tests called for in the Contract Documents, to a final determination of quantities and classifications for Unit Price Work under Paragraph 9.07, and to any other qualifications stated in the recommendation); and

c. the conditions precedent to Contractor's being entitled to such payment appear to have been fulfilled in so far as it is Engineer's responsibility to observe the Work.

3. By recommending any such payment Engineer will not thereby be deemed to have represented that:

a. inspections made to check the quality or the quantity of the Work as it has been performed have been exhaustive, extended to every aspect of the Work in progress, or involved detailed inspections of the Work beyond the responsibilities specifically assigned to Engineer in the Contract Documents; or

b. that there may not be other matters or issues between the parties that might entitle Contractor to be paid additionally by Owner or entitle Owner to withhold payment to Contractor.

4. Neither Engineer's review of Contractor's Work for the purposes of recommending payments nor Engineer's recommendation of any payment, including final payment, will impose responsibility on Engineer:

a. to supervise, direct, or control the Work, or

Copyright © 2002 National Society of Professional Engineers for EJCDC. All rights reserved.

b. for the means, methods, techniques, sequences, or procedures of construction, or the safety precautions and programs incident thereto, or

c. for Contractor's failure to comply with Laws and Regulations applicable to Contractor's performance of the Work, or

d. to make any examination to ascertain how or for what purposes Contractor has used the moneys paid on account of the Contract Price, or

e. to determine that title to any of the Work, materials, or equipment has passed to Owner free and clear of any Liens.

5. Engineer may refuse to recommend the whole or any part of any payment if, in Engineer's opinion, it would be incorrect to make the representations to Owner stated in Paragraph 14.02.B.2. Engineer may also refuse to recommend any such payment or, because of subsequently discovered evidence or the results of subsequent inspections or tests, revise or revoke any such payment recommendation previously made, to such extent as may be necessary in Engineer's opinion to protect Owner from loss because:

a. the Work is defective, or completed Work has been damaged, requiring correction or replacement;

b. the Contract Price has been reduced by Change Orders;

c. Owner has been required to correct defective Work or complete Work in accordance with Paragraph 13.09; or

d. Engineer has actual knowledge of the occurrence of any of the events enumerated in Paragraph 15.02.A.

C. *Payment Becomes Due*

1. Ten days after presentation of the Application for Payment to Owner with Engineer's recommendation, the amount recommended will (subject to the provisions of Paragraph 14.02.D) become due, and when due will be paid by Owner to Contractor.

D. *Reduction in Payment*

1. Owner may refuse to make payment of the full amount recommended by Engineer because:

a. claims have been made against Owner on account of Contractor's performance or furnishing of the Work;

b. Liens have been filed in connection with the Work, except where Contractor has delivered a specific bond satisfactory to Owner to secure the satisfaction and discharge of such Liens;

c. there are other items entitling Owner to a set-off against the amount recommended;

d. Owner has actual knowledge of the occurrence of any of the events enumerated in Paragraphs 14.02.B.5.a through 14.02.B.5.c or Paragraph 15.02.A;

e. reasonable evidence that the Work cannot be completed for the unpaid balance of the Contract Amount;

f. damage to the Owner or another contractor;

g. reasonable evidence that the Work will not be completed within the Contract Time, and that the unpaid balance would not be adequate to cover actual or liquidated damages for the anticipated delay;

h. failure of the Contractor to submit a schedule of values in accordance with the Contract Documents;

i. failure of the Contractor to submit a submittal schedule in accordance with the Contract Documents;

j. failure of the Contractor to submit or update construction schedules, including Progress Schedule(s), in accordance with the Contract Documents;

k. failure of the Contractor to maintain a Record Documents;

l. failure of the Contractor to maintain weekly payroll reports;

m. failure of the Contractor to submit monthly Subcontractor reports;

n. the Contractor's neglect or unsatisfactory prosecution of the Work, including failure to clean up;

o. assessment of fines and/or penalties for violations of any federal or state law;

p. notice of potential claims by subcontractors or suppliers; or

q. failure of the Contractor to comply with any provision of the Contract Documents.

Copyright © 2002 National Society of Professional Engineers for EJCDC. All rights reserved.

2. If Owner refuses to make payment of the full amount recommended by Engineer, Owner will give Contractor immediate written notice (with a copy to Engineer) stating the reasons for such action and promptly pay Contractor any amount remaining after deduction of the amount so withheld. Owner shall promptly pay Contractor the amount so withheld, or any adjustment thereto agreed to by Owner and Contractor, when Contractor corrects to Owner's satisfaction the reasons for such action.

3. If it is subsequently determined that Owner's refusal of payment was not justified, the amount wrongfully withheld shall be treated as an amount due as determined by Paragraph 14.02.C.1.

E. No money shall be paid by the Owner upon any claim, debt, demand or account whatsoever, to any person, firm or corporation who is in arrears to the City of Georgetown for taxes; and the City of Georgetown shall be entitled to counterclaim and offset against any such debt, claim, demand or account in the amount of taxes so in arrears and no assignment or transfer of such debt, claim, demand or account after said taxes are due, shall affect the right of the Owner to so offset said taxes, and associated penalties and interest if applicable, against the same.

14.03 *Contractor's Warranty of Title*

A. Contractor warrants and guarantees that title to all Work, materials, and equipment covered by any Application for Payment, whether incorporated in the Project or not, will pass to Owner no later than the time of payment free and clear of all Liens.

(1) The Contractor further expressly undertakes to defend the Owner and Engineer, at the Contractor's sole expense, against any actions, lawsuits, or proceedings brought against the Owner, Engineer, or any third party as a result of liens filed against the Work, the site of any of the Work, the project site and any improvements thereon, payments due the Contractor, or any portion of the property of the Owner, Engineer, or third party. The Contractor hereby agrees to indemnify and hold the Owner, Engineer, and third parties harmless against any such liens or claims of lien and agrees to pay any judgment or lien resulting from any such action, lawsuit, or proceeding.

(2) The Owner shall release any payments withheld due to a lien or claim of lien if the Contractor obtains security acceptable to the Owner or a lien bond that is (i) issued by a surety acceptable to the Owner; (ii) in a form and substance satisfactory to the Owner; and (iii) in an amount not less than two hundred percent (200%) of such lien claim. By posting a lien bond or other acceptable security, however, the Contractor shall not be relieved of any responsibilities or obligations under this paragraph, including, without limitation, the duty to defend and indemnify the Owner and Engineer. The cost of any premiums incurred in connection with such bonds and securities shall be the responsibility of the Contractor and shall not be part of, or cause any adjustment to, the Contract Price.

(3) The Contractor agrees to waive any right that it may have to assert a mechanic's or other lien against the project site and any improvements thereon, including without limitation, the Work itself. Furthermore, the Contractor will cause a similar provision, waiving all rights to a mechanic's or other lien against the property, to be included in all of its subcontracts, any sub-subcontracts, and all contracts with material suppliers.

(4) Notwithstanding the foregoing, the Owner reserves the right to settle any disputed mechanic's or material supplier's lien claim by payment to the lien claimant or by such other means as the Owner, in the Owner's sole discretion, determines is the most economical or advantageous method of settling the dispute. The Contractor shall promptly reimburse the Owner, upon demand, for any payment so made.

14.04 *Substantial Completion*

A. When Contractor considers the entire Work ready for its intended use Contractor shall notify Owner and Engineer in writing that the entire Work is substantially complete (except for items specifically listed by Contractor as incomplete) and request that Engineer issue a certificate of Substantial Completion.

B. Promptly after Contractor's notification, , Owner, Contractor, and Engineer shall make an inspection of the Work to determine the status of completion. If Engineer does not consider the Work substantially complete, Engineer will notify Contractor in writing giving the reasons therefor.

C. If Engineer considers the Work substantially complete, Engineer will deliver to Owner a tentative certificate of Substantial Completion which shall fix the date of Substantial Completion. There shall be attached to the certificate a tentative list of items to be completed or corrected before final payment. Owner shall have seven days after receipt of the tentative certificate during which to make written objection to Engineer as to any provisions of the certificate or attached list. If, after considering such objections, Engineer concludes that the Work is not substantially complete, Engineer will within 14 days after submission of the tentative certificate to Owner notify Contractor in writing, stating the reasons therefor. If, after consideration of Owner's objections, Engineer considers the Work substantially complete, Engineer will within said 14 days execute and deliver to Owner and Contractor a definitive certificate of Substantial Completion (with a revised tentative list of items to be completed or corrected) reflecting such changes from the tentative certificate

Copyright © 2002 National Society of Professional Engineers for EJCDC. All rights reserved.

as Engineer believes justified after consideration of any objections from Owner.

D. At the time of delivery of the tentative certificate of Substantial Completion, Engineer will deliver to Owner and Contractor a written recommendation as to division of responsibilities pending final payment between Owner and Contractor with respect to security, operation, safety, and protection of the Work, maintenance, heat, utilities, insurance, and warranties and guarantees. Unless Owner and Contractor agree otherwise in writing and so inform Engineer in writing prior to Engineer's issuing the definitive certificate of Substantial Completion, Engineer's aforesaid recommendation will be binding on Owner and Contractor until final payment.

E. Owner shall have the right to exclude Contractor from the Site after the date of Substantial Completion subject to allowing Contractor reasonable access to complete or correct items on the tentative list.

14.05 *Partial Utilization*

A. Prior to Substantial Completion of all the Work, Owner may use or occupy any substantially completed part of the Work which has specifically been identified in the Contract Documents, or which Owner, Engineer, and Contractor agree constitutes a separately functioning and usable part of the Work that can be used by Owner for its intended purpose without significant interference with Contractor's performance of the remainder of the Work, subject to the following conditions.

1. Owner at any time may request Contractor in writing to permit Owner to use or occupy any such part of the Work which Owner believes to be ready for its intended use and substantially complete. If and when Contractor agrees that such part of the Work is substantially complete, Contractor will certify to Owner and Engineer that such part of the Work is substantially complete and request Engineer to issue a certificate of Substantial Completion for that part of the Work.

2. Contractor at any time may notify Owner and Engineer in writing that Contractor considers any such part of the Work ready for its intended use and substantially complete and request Engineer to issue a certificate of Substantial Completion for that part of the Work.

3. Within a reasonable time after either such request, Owner, Contractor, and Engineer shall make an inspection of that part of the Work to determine its status of completion. If Engineer does not consider that part of the Work to be substantially complete, Engineer will notify Owner and Contractor in writing giving the reasons therefor. If Engineer considers that part of the Work to be substantially complete, the provisions of Paragraph 14.04 will apply with respect to certification of Substantial Completion of that part of the Work and the division of responsibility in respect thereof and access thereto.

4. No use or occupancy or separate operation of part of the Work may occur prior to compliance with the requirements of Paragraph 5.10 regarding property insurance.

14.06 *Final Inspection*

A. Upon written notice from Contractor that the entire Work or an agreed portion thereof is complete, Engineer will promptly make a final inspection with Owner and Contractor and will notify Contractor in writing of all particulars in which this inspection reveals that the Work is incomplete or defective. Contractor shall immediately take such measures as are necessary to complete such Work or remedy such deficiencies.

14.07 *Final Payment*

A. Application for Payment

1. After Contractor has, in the opinion of Engineer, satisfactorily completed all corrections identified during the final inspection and has delivered, in accordance with the Contract Documents, all maintenance and operating instructions, schedules, guarantees, bonds, certificates or other evidence of insurance certificates of inspection, marked-up record documents (as provided in Paragraph 6.12), and other documents, Contractor may make application for final payment following the procedure for progress payments.

2. The final Application for Payment shall be accompanied (except as previously delivered) by:

a. all documentation called for in the Contract Documents, including but not limited to the evidence of insurance required by Paragraph 5.04.B.7;

b. consent of the surety, if any, to final payment;

c. a list of all Claims against Owner that Contractor believes are unsettled; and

d. complete and legally effective releases or waivers (satisfactory to Owner) of all Lien rights arising out of or Liens filed in connection with the Work.

e. Non-Use of Asbestos Affidavit (After Construction);

f. Affidavit that all payrolls, bills for materials and equipment, subcontracted Work, and all indebtedness connected with the Work, except as specifically noted, are paid or will be paid, or will be otherwise satisfied within the period of time required by Chapter 2251 of the Texas Government Code. Contractor's affidavit shall include documentation establishing payment or satisfaction of all

Copyright © 2002 National Society of Professional Engineers for EJCDC. All rights reserved.

such obligations such as receipts, releases, and waivers of claims and liens arising out of the Contract. The Contractor may not subsequently submit a claim on behalf of a subcontractor or vendor unless the Contractor's affidavit notes that claim as an exception; and

g. Other data establishing payment or satisfaction of obligations, such as receipts, releases and waivers of liens, claims, security interests or encumbrances arising out of the Contract, to the extent and in such form as may be designated by the Owner.

3. In lieu of the releases or waivers of Liens specified in Paragraph 14.07.A.2 and as approved by Owner, Contractor may furnish receipts or releases in full and an affidavit of Contractor that: (i) the releases and receipts include all labor, services, material, and equipment for which a Lien could be filed; and (ii) all payrolls, material and equipment bills, and other indebtedness connected with the Work for which Owner or Owner's property might in any way be responsible have been paid or otherwise satisfied. If any Subcontractor or Supplier fails to furnish such a release or receipt in full, Contractor may furnish a bond or other collateral satisfactory to Owner to indemnify Owner against any Lien.

B. Engineer's Review of Application and Acceptance

1. If, on the basis of Owner's and Engineer's observation of the Work during construction and final inspection, and Owner's and Engineer's review of the final Application for Payment and accompanying documentation as required by the Contract Documents, Owner and Engineer are satisfied that the Work has been completed and Contractor's other obligations under the Contract Documents have been fulfilled, Engineer will, within ten days after receipt of the final Application for Payment, indicate in writing Engineer's recommendation of payment and present the Application for Payment to Owner for payment. At the same time Engineer will also give written notice to Owner and Contractor that the Work is acceptable subject to the provisions of Paragraph 14.09. Otherwise, Engineer will return the Application for Payment to Contractor, indicating in writing the reasons for refusing to recommend final payment, in which case Contractor shall make the necessary corrections and resubmit the Application for Payment.

C. Payment Becomes Due

1. Thirty days after the presentation to Owner of the Application for Payment and accompanying documentation, the amount recommended by Engineer, less any sum Owner is entitled to set off against Engineer's recommendation, including but not limited to liquidated damages, will become due and, will be paid by Owner to Contractor.

14.08 *Final Completion Delayed*

A. If, through no fault of Contractor, final completion of the Work is significantly delayed, and if Engineer so confirms, Owner shall, upon receipt of Contractor's final Application for Payment (for Work fully completed and accepted) and recommendation of Engineer, and without terminating the Contract, make payment of the balance due for that portion of the Work fully completed and accepted. If the remaining balance to be held by Owner for Work not fully completed or corrected is less than the retainage stipulated in the Agreement, and if bonds have been furnished as required in Paragraph 5.01, the written consent of the surety to the payment of the balance due for that portion of the Work fully completed and accepted shall be submitted by Contractor to Engineer with the Application for such payment. Such payment shall be made under the terms and conditions governing final payment, except that it shall not constitute a waiver of Claims.

14.09 *Waiver of Claims*

A. The making and acceptance of final payment will constitute:

1. a waiver of all Claims by Owner against Contractor, except Claims arising from unsettled Liens, from defective Work appearing after final inspection pursuant to Paragraph 14.06, from failure to comply with the Contract Documents or the terms of any special guarantees specified therein, or from Contractor's continuing obligations under the Contract Documents; and

2. a waiver of all Claims by Contractor against Owner other than those previously made in accordance with the requirements herein and expressly acknowledged by Owner in writing as still unsettled.

ARTICLE 15 - SUSPENSION OF WORK AND TERMINATION

15.01 *Owner May Suspend Work*

A. At any time and without cause, Owner may suspend the Work or any portion thereof for a period of not more than 90 consecutive days by notice in writing to Contractor and Engineer which will fix the date on which Work will be resumed. Contractor shall resume the Work on the date so fixed. Contractor shall be granted an adjustment in the Contract Price or an extension of the Contract Times, or both, directly attributable to any such suspension if Contractor makes a Claim therefor as provided in Paragraph 10.05.

Copyright © 2002 National Society of Professional Engineers for EJCDC. All rights reserved.

15.02 *Owner May Terminate for Cause*

A. The occurrence of any one or more of the following events will justify termination for cause:

1. Contractor's persistent failure to perform the Work in accordance with the Contract Documents (including, but not limited to, failure to supply sufficient skilled workers or suitable materials or equipment or failure to adhere to the Progress Schedule established under Paragraph 2.07 as adjusted from time to time pursuant to Paragraph 6.04);

2. Contractor's disregard of Laws or Regulations of any public body having jurisdiction;

3. Contractor's disregard of the authority of Engineer; or

4. Persistent failure to prosecute the Work in accordance with the Contract, and to insure its completion within the time, or any approved extension thereof, specified in this Contract; and/or

5. Failure to remedy defective Work condemned by the Owner; and/or

6. Failure to pay subcontractors, laborers, and material suppliers pursuant to Tex. Gov't Code Chapter 2251; and/or

7. Persistent endangerment to the safety of labor or of the Work; and/or

8. Failure to supply or maintain statutory bonds or to maintain required insurance, pursuant to the contract; and/or

9. If the CONTRACTOR is adjudged a bankrupt, or makes a general assignment for the benefit of creditors, or if a receiver is appointed for the benefit of creditors, or if a receiver is appointed on account of CONTRACTOR's insolvency, or if CONTRACTOR has otherwise demonstrated financial inability to perform the Work; and/or

10. Contractor's violation in any substantial way of any provisions of the Contract Documents.

B. If one or more of the events identified in Paragraph 15.02.A occur, Owner may, after giving Contractor (and surety) seven days written notice of its intent to terminate the services of Contractor:

1. exclude Contractor from the Site, and take possession of the Work and of all Contractor's tools, appliances, construction equipment, and machinery at the Site, and use the same to the full extent they could be used by Contractor (without liability to Contractor for trespass or conversion),

2. incorporate in the Work all materials and equipment stored at the Site or for which Owner has paid Contractor but which are stored elsewhere, and

3. complete the Work as Owner may deem expedient.

C. If Owner proceeds as provided in Paragraph 15.02.B, Contractor shall not be entitled to receive any further payment until the Work is completed. If the unpaid balance of the Contract Price exceeds all claims, costs, losses, and damages (including but not limited to all fees and charges of engineers, architects, attorneys, and other professionals and all court or arbitration or other dispute resolution costs) sustained by Owner arising out of or relating to completing the Work, such excess will be paid to Contractor. If such claims, costs, losses, and damages exceed such unpaid balance, Contractor shall pay the difference to Owner. Such claims, costs, losses, and damages incurred by Owner will be reviewed by Engineer as to their reasonableness and, when so approved by Engineer, incorporated in a Change Order. When exercising any rights or remedies under this Paragraph Owner shall not be required to obtain the lowest price for the Work performed.

D. Notwithstanding Paragraphs 15.02.B and 15.02.C, Contractor's services will not be terminated if Contractor begins within seven days of receipt of notice of intent to terminate to correct its failure to perform and proceeds diligently to cure such failure within no more than 30 days of receipt of said notice.

E. Where Contractor's services have been so terminated by Owner, the termination will not affect any rights or remedies of Owner against Contractor then existing or which may thereafter accrue. Any retention or payment of moneys due Contractor by Owner will not release Contractor from liability.

F. If and to the extent that Contractor has provided a performance bond under the provisions of Paragraph 5.01.A, the termination procedures of that bond shall supersede the provisions of Paragraphs 15.02.B, and 15.02.C.

G. In the event that Owner's termination under Paragraph 15.02 is determined to be wrongful, the termination will automatically become a termination for convenience under Paragraph 15.03, and Contractor's remedy for wrongful termination shall be limited to recovery of payments permitted for termination for convenience under paragraph 15.03.

Copyright © 2002 National Society of Professional Engineers for EJCDC. All rights reserved.

15.03 *Owner May Terminate For Convenience*

A. The Owner may, at any time, terminate the Contract in whole or in part for the Owner's convenience and without cause. Termination by the Owner under this paragraph shall be by a notice of termination delivered to the Contractor specifying the extent of termination and the effective date.

B. Upon receipt of a notice of termination for convenience, the Contractor shall immediately, in accordance with instructions from the Owner, proceed with performance of the following duties regardless of delay in determining or adjusting amounts due under this paragraph:

1. cease operations as specified in the notice;

2. place no further orders and enter into no further subcontracts for materials, labor, service, or facilities except as necessary to complete continued portions of the Contract;

3. terminate all subcontracts and orders to the extent they relate to the Work terminated;

4. proceed to complete the performance of the Work not terminated; and

5. take actions that may be necessary, or that the Owner may direct, for the protection and preservation of the terminated Work.

C. Upon such termination, the Contractor shall recover as its sole remedy payment of the percentage of the Contract Price equal to the percentage of the Work performed satisfactorily and not previously paid for as determined by the Engineer. The Contractor hereby waives and forfeits all other claims for payment and damages, including, without limitation, anticipated profits or revenue or other economic loss arising out of or resulting from such termination.

D. The Owner shall be credited for (1) payments previously made to the Contractor for the terminated portion of the Work; (2) claims that the Owner has against the Contractor under the Contract; and (3) the value of the materials, supplies, equipment, or other items that are to be disposed of by the Contractor that are part of the Contract Price.

ARTICLE 16 - DISPUTE RESOLUTION

16.01 *Methods and Procedures*

A. Claims shall be made by Written Notice delivered by the party making the Claim to the other party within thirty (30) calendar days after the start of the occurrence or event giving rise to the Claim and stating the general nature of the Claim. Notice of the amount of the Claim with supporting data shall be delivered within thirty (30) calendar days after Written Notice of Claim is delivered by claimant and shall represent that the adjustment claimed covers all known amounts to which claimant is entitled.

B. Within thirty (30) calendar days of receipt of notice of the amount of the Claim with supporting data, Owner and the Contractor shall meet to discuss the Claim, after which an offer of settlement or notification of no settlement offer will be made to claimant. If claimant is not satisfied with the proposal presented, claimant shall have thirty (30) calendar days in which to:

.1 submit additional supporting data requested by the other party;

.2 modify the initial Claim; or

.3 request Alternative Dispute Resolution.

16.02 *Alternative Dispute Resolution*

A. If a dispute exists concerning a Claim, the parties agree to use the following procedure prior to pursuing any other available remedies. The Owner reserves the right to include Engineer as a party.

B. Either party may give the other party written notification of any dispute not resolved in the normal course of business. Within fifteen (15) days after delivery of the notice, the receiving party shall submit to the other party a written response. The notice and response shall include (a) a statement of that party's position and a summary of arguments supporting that position, and (b) the name and title of the executive who will represent that party and of any other person will accompany that executive.

C. Within thirty (30) days after delivery of the initial notice, the executives of both parties shall meet in Georgetown, Texas at a mutually acceptable time and location, and thereafter as often as they deem reasonably necessary to attempt to resolve the dispute.

D. All reasonable requests for information made by one party to the other will be honored.

E. All negotiations are confidential and shall be treated as compromise and settlement negotiations for purpose of applicable rules of evidence.

F. Each party is required to continue to perform its obligations under the Contract Documents pending final resolution of any dispute arising out of or relating to the Contract Documents.

16.03 *Mediation*

Copyright © 2002 National Society of Professional Engineers for EJCDC. All rights reserved.

A. If the procedure described in Paragraph 16.02 proves unsuccessful or is waived pursuant to its terms, the parties shall initiate the mediation process, as follows:

B. Any Claim arising out of or related to the Contract, shall be subject to mediation as a condition precedent to the institution of legal or equitable proceedings by either party.

C. The parties shall endeavor to resolve their Claims by mediation. Request for mediation shall be filed in writing with the other party. The request may be made concurrently with the filing of a lawsuit but, in such event, mediation shall proceed in advance of legal or equitable proceedings, which shall be stayed pending mediation for a period of 60 days from the date of filing, unless stayed for a longer period by agreement of the parties or court order.

D. The parties shall share the mediator's fee and any filing fees equally. The mediation shall be held in Georgetown, Texas, unless another location is mutually agreed upon. Agreements reached in mediation shall be enforceable as settlement agreements in any court having jurisdiction thereof.

J. Claims not resolved by mediation shall be decided by litigation. Venue shall be proper only in Williamson County, Texas.

ARTICLE 17 - MISCELLANEOUS

17.01 *Giving Notice*

A. Whenever any provision of the Contract Documents requires the giving of written notice, it will be deemed to have been validly given if:

1. delivered in person to the individual or to a member of the firm or to an officer of the corporation for whom it is intended, or

2. delivered at or sent by registered or certified mail, postage prepaid, to the last business address known to the giver of the notice.

17.02 *Computation of Times*

A. When any period of time is referred to in the Contract Documents by days, it will be computed to exclude the first and include the last day of such period. If the last day of any such period falls on a Saturday or Sunday or on a day made a legal holiday by the law of the applicable jurisdiction, such day will be omitted from the computation.

B. The following legal holidays are observed by the Owner:

Holiday	*Date Observed*
New Year's Day	January 1
Martin Luther King, Jr.'s Birthday	Third Monday in January
Memorial Day	Last Monday in May
Independence Day	July 4
Labor Day	First Monday in September
Thanksgiving Day	Fourth Thursday in November
Friday after Thanksgiving	Friday after Thanksgiving
Christmas Eve	December 24
Christmas Day	December 25

C. If a Legal Holiday falls on Saturday, it will be observed on the preceding Friday. If a Legal Holiday falls on Sunday, it will be observed on the following Monday. If Christmas Eve falls on a Saturday or a Sunday, the preceding Friday is observed as the Christmas Eve holiday. If Christmas Day falls on a Saturday or a Sunday, the following Monday is observed as the Christmas Day holiday.

17.03 *Cumulative Remedies*

A. The duties and obligations imposed by these General Conditions and the rights and remedies available hereunder to the parties hereto are in addition to, and are not to be construed in any way as a limitation of, any rights and remedies available to any or all of them which are otherwise imposed or available by Laws or Regulations, by special warranty or guarantee, or by other provisions of the Contract Documents. The provisions of this Paragraph will be as effective as if repeated specifically in the Contract Documents in connection with each particular duty, obligation, right, and remedy to which they apply.

B. The Contractor and Owner waive all Claims against each other for consequential damages arising out of or relating to this Contract; provided, however, that in no event shall this mutual waiver be deemed to preclude an award of liquidated damages recoverable under the Agreement. This mutual waiver is applicable, without limitation, to all consequential damages due to either party's termination in accordance with this Contract.

Copyright © 2002 National Society of Professional Engineers for EJCDC. All rights reserved.

17.04 *Survival of Obligations*

A. All representations, indemnifications, warranties, and guarantees made in, required by, or given in accordance with the Contract Documents, as well as all continuing obligations indicated in the Contract Documents, will survive final payment, completion, and acceptance of the Work or termination or completion of the Contract or termination of the services of Contractor.

17.05 *Controlling Law*

A. This Contract is to be governed by the law of the State of Texas.

17.06 *Headings*

A. Article and paragraph headings are inserted for convenience only and do not constitute parts of these General Conditions.

Copyright © 2002 National Society of Professional Engineers for EJCDC. All rights reserved.

SECTION 00800

SUPPLEMENTARY CONDITIONS

GENERAL

These Supplementary Conditions amend or supplement the Standard General Conditions of the Construction Contract and other provisions of the Contract Documents as indicated below. All provisions which are not so amended or supplemented remain in full force and effect.

The terms used in these Supplementary Conditions will have the meanings indicated in the General Conditions. Additional terms used in these Supplementary Conditions have the meanings indicated below, which are applicable to both the singular and plural thereof.

SC-1.01 DEFINED TERMS

Add the following defined terms to Section 1.01:

53 *Calendar Day*: "Calendar Day" is any day of the week or month, no days being excepted.

54 *Working Day*: A "Working Day" is defined as any day not including Saturdays, Sundays or any legal holidays, in which weather or other conditions, not under the control of the CONTRACTOR, will permit construction of the principal units of the work for a period of not less than seven (7) hours between 7:00 a.m. and 6:00 p.m.

55 *Working Times*: Times of day(s) during which work may be performed. Unless authorized by the City of Georgetown, all Work shall be performed between 7:00am and 6:00pm on weekdays and, if previously authorized by as provided for in Section 6.02 herein, as applicable, between 9:00 am and 6:00 pm on Saturdays, Sundays, or Legal Holidays. When the CONTRACTOR has been authorized to perform Work during hours outside Working Times, such hours shall be considered time worked on Working days. Notwithstanding the preceding, emergency work may be done without prior permission only as provided in paragraph 6.16 herein.

56 *Proposal:* Proposal of Offeror, under Local Government Code section 271.113 providing for alternative project delivery methods, on prescribed forms setting forth prices for performing the Work described in the Contract Documents.

57 *Proposal Documents*: The advertisement or invitation for Proposals, Instruction to Offerors, the Proposal form, the Contract Documents and Addenda (NOTE: this definition only applies where proposals, rather than bids have been solicited and where allowed under the Local Government Code).

SC-4.01 AVAILABILITY OF LANDS

Add the following defined terms to Section 4.01:

D. The Site for this project shall include the temporary and permanent easements as indicated on the Drawings.

SC-4.02 SUBSURFACE AND PHYSICAL CONDITIONS

Add the following paragraph immediately after paragraph 4.02.B:

C. In the preparation of the Contract Documents ENGINEER relied upon the following reports of explorations and tests of subsurface conditions at the Site:

1. Geotechnical information including bore logs are presented in "City of Georgetown South Lake Water Treatment Plant to South Fork Interceptor Wastewater Improvements – Geotechnical Engineering Report" prepared by Terracon Consultants, Inc., Austin, Texas dated November 6, 2023.

2. Copies of the report listed in SC-4.02.C.1 that are not included with the Bidding Documents may be examined at the offices of ENGINEER during regular business hours, or may be obtained from the ENGINEER. This report is not part of the Contract Documents, but the "technical data" contained therein, upon which CONTRACTOR may rely, is attached to Section CIP4. CONTRACTOR is not entitled to rely upon other information and data utilized by ENGINEER in the preparation of Drawings and Specifications.

3. CONTRACTOR represents that he has satisfied himself as to the subsurface conditions at the Site of the Work. The Contract Documents, including subsurface conditions, but excluding the "technical data" referenced in SC-4.02.C.2 above, are for information purposes only and are not warranted or represented in any manner to accurately show the conditions at the Site of the Work. All risks of differing site conditions shall be borne solely by the CONTRACTOR.

SC-4.03 DIFFERING SUBSURFACE AND PHYSICAL CONDITIONS

In Section 4.03.A.2, delete the last sentence in its entirety and add the following language: "All risks of differing site conditions shall be borne solely by the Contractor, except for mitigation of karst features which will be paid under the applicable bid items."

SC-5.02 LICENSED SURETIES AND INSURERS

Add the following to Section 5.02 A:

Surety and insurance companies from which the bonds and insurance for this Project are purchased shall have a Best's rating of no less than A:VII, in addition to other requirements specified herein.

SC-5.04 CONTRACTOR'S LIABILITY INSURANCE

Add the following to Section 5.04.B.1:

Include the following parties or entities as additional insured:

CDM Smith Inc.
8310-1 N Capital of Texas Hwy., Suite 250
Austin, Texas 78731

SC-5.04 Contractor's Liability Insurance

Replace Paragraph 5.04 with the following SC-5.04

5.04 *Other Requirements: Bond and Insurance.*

A. General Requirements:

1. CONTRACTOR shall purchase and maintain insurance in the types and amounts indicated below for the duration of the Contract (unless a longer duration is specified), which shall include items owned by OWNER in the care, custody and control of CONTRACTOR prior to and during the term of the Contract and all warranty periods. Failure to purchase and maintain the required insurance shall be grounds for Termination of the Contract or Suspension of the Work by OWNER. Except for the Worker's Compensation policy, the other insurance policies required by the Contract to be obtained by CONTRACTOR must state that OWNER, its officials, directors, employees, representatives, and volunteers are added as additional insureds with regard to operations and activities by or on behalf of the named insureds performed under contract with OWNER. The additional insured status must cover completed operations as well, and the policy covering completed work must remain in effect until the expiration of the statue of repose.

2. CONTRACTOR must complete and forward the required Certificates of Insurance to OWNER before the Contract is executed as verification of coverage required below. CONTRACTOR shall not commence Work until the required insurance is obtained and until such insurance has been reviewed by OWNER. Approval of insurance by OWNER shall not relieve or decrease the liability of CONTRACTOR hereunder and shall not be construed to be a limitation of liability on the part of CONTRACTOR. CONTRACTOR must also complete and forward the required Certificates of Insurance to OWNER whenever a previously identified policy period has expired as verification of continuing coverage.

3. Contractor's insurance coverage is to be written by companies licensed to do business in the State of Texas at the time the policies are issued and shall be written by companies with A.M. Best ratings of B+VII or better, except for hazardous material insurance which shall be written by companies with A.M. Best ratings of A- or better.

4. All endorsements naming the OWNER as additional insured, waivers, and notices of cancellation endorsements as well as the Certificate of Insurance shall indicate: City of Georgetown, 808 Martin Luther King Jr. St., Georgetown, Texas 78626, ATTN: Senior Buyer.

5. The "other" insurance clause shall not apply to the OWNER where the OWNER is an additional insured shown on any policy. It is agreed that the CONTRACTOR's insurance shall be considered primary with respect to any insurance or self insurance carried by OWNER. The CONTRACTOR'S insurance shall apply separately to each insured against whom a claim is made and/or lawsuits brought, except with respect to the limits of insurer's liability.

6. If insurance policies are not written for amounts specified below, CONTRACTOR shall carry Umbrella or Excess Liability Insurance for any differences in amounts specified. If Excess Liability Insurance is provided, it shall follow the form of the primary coverage.

7. OWNER shall be entitled, upon request and without expense, to receive certified copies of policies and endorsements thereto and may make any reasonable requests for deletion or revision or modification of particular policy terms, conditions, limitations, or exclusions except where policy provisions are established by law or regulations binding upon either of the parties hereto or the underwriter on any such policies.

8. OWNER reserves the right to review the insurance requirements set forth during the effective period of this Contract and to make reasonable adjustments to insurance coverage, limits, and exclusions when deemed necessary and prudent by OWNER based upon changes in statutory law, court decisions, the claims history of the industry or financial condition of the insurance company as well as CONTRACTOR.

9. CONTRACTOR shall not cause any insurance to be canceled nor permit any insurance to lapse during the term of the Contract or as required in the Contract.

10. CONTRACTOR shall be responsible for premiums, deductibles and self-insured retentions, if any, stated in policies. All deductibles or self-insured retentions shall be disclosed on the Certificate of Insurance.

11. The policies must contain the following language: "This policy shall not be cancelled, materially changed, or not renewed until after thirty (30) days prior written notice has been given to OWNER." In addition, CONTRACTOR shall provide OWNER thirty (30) days written notice of erosion of the aggregate limits below occurrence limits for all applicable coverages indicted within the Contract.

12. If OWNER-owned property is being transported or stored off-Site by CONTRACTOR, then the appropriate property policy will be endorsed for transit and storage in an amount sufficient to protect OWNER's property.

13. The insurance coverages required under this contract are required minimums and are not intended to limit the responsibility or liability of CONTRACTOR.

14. Without limiting any of the other obligations or liabilities of the CONTRACTOR, the CONTRACTOR shall require each Subcontractor performing work under the Contract, at the Subcontractor's own expense, to maintain during the term of the Contract, the same stipulated minimum insurance including the required provisions and additional policy conditions as shown above. As an alternative, the CONTRACTOR may include its Subcontractors as

additional insureds on its own coverage as prescribed under these requirements. The CONTRACTOR's certificate of insurance shall note in such event that the Subcontractors are included as additional insureds and that CONTRACTOR agrees to provide Workers' Compensation for the Subcontractors and their employees. The CONTRACTOR shall obtain and monitor the certificates of insurance from each Subcontractor in order to assure compliance with the insurance requirements. The CONTRACTOR must retain the certificates of insurance for the duration of the Contract plus 5 years and shall have the responsibility of enforcing these insurance requirements among its subcontractors. The OWNER shall be entitled, upon request and without expense, to receive copies of these certificates.

B. Business Automobile Liability Insurance. Provide coverage for all owned, non-owned and hired vehicles in an amount not less than $1,000,000 combined single limit per accident for bodily injury and property damage. The policy shall contain the following endorsements in favor of OWNER:

Waiver of Subrogation endorsement TE 2046A;

30 day Notice of Cancellation endorsement TE 0202A; and

Additional Insured endorsement TE 9901 B.

Provide coverage in the following types and amounts:

A minimum combined bodily injury and property damage limit of $1,000,000 per occurrence. No aggregate shall be permitted for this type of coverage.

Such insurance shall include coverage for loading and unloading hazards.

C. Workers' Compensation and Employers' Liability Insurance. Coverage shall be consistent with statutory benefits outlined in the Texas Workers' Compensation Act (Section 401). CONTRACTOR shall assure compliance with this Statute by submitting two (2) copies of a standard certificate of coverage (e.g. ACCORD form) to Owner's Representative for every person providing services on the Project as acceptable proof of coverage. The required Certificate of Insurance must be presented as evidence of coverage for CONTRACTOR. Workers' Compensation Insurance coverage written by the Texas Workers Compensation Fund is acceptable to OWNER. CONTRACTOR's policy shall apply to the State of Texas and include these endorsements in favor of OWNER:

Waiver of Subrogation, form WC 420304; and

30 day Notice of Cancellation, form WC 420601.

The minimum policy limits for Employers' Liability Insurance coverage shall be the minimum amounts required to meet the statutory requirements of Texas Labor Code, Section 401.011(44), or the following, whichever is greater:

$1,000,000 bodily injury per accident, and

$1,000,000 bodily injury by disease policy limit; and

$1,000,000 bodily injury by disease each employee; and

$1,000,000 Employer's Liability.

D. Commercial General Liability Insurance. The Policy shall contain the following provisions:

Blanket contractual liability coverage for liability and indemnifications assumed under the Contract and all contracts relative to this Project.

Completed Operations/Products Liability until the end the statute of repose period.

Explosion, Collapse and Underground (X, C & U) coverage.

Independent Contractor's coverage.

Aggregate limits of insurance per project, endorsement CG 2503.

OWNER listed as an additional insured, endorsement CG 2010.

30 day notice of cancellation in favor of OWNER, endorsement CG 0205.

Waiver of Transfer of Recovery Against Others in favor of OWNER, endorsement CG 2404

fully insuring CONTRACTOR'S or Subcontractor's liability for bodily injury and property damages with a combined bodily injury (including death) and property damage minimum limit of:

$1,000,000 per occurrence

$2,000,000 general aggregate

$2,000,000 products and completed operations aggregate

Coverage shall be on an "occurrence" basis.

E. Property Floater. Contractor shall obtain and maintain Property Floater in an amount sufficient to cover the replacement value of materials on site.

F. Umbrella Liability Insurance. The CONTRACTOR shall obtain, pay for, and maintain umbrella liability insurance during the contract term, insuring the CONTRACTOR (or subcontractor) for an amount not less than $2,000,000 that provides coverage at least as broad and applies in excess of and follows the form of the primary liability coverages required in Article 5. The policy shall provide "drop down" coverage where underlying primary insurance coverages limits are insufficient or exhausted.

G. Asbestos Abatement Liability Insurance. If the Work or the Project involves asbestos containing materials, the CONTRACTOR shall obtain Asbestos Abatement Liability Insurance for liability arising from the encapsulation, removal, handling, storage, transportation, and disposal of asbestos containing materials. The combined single limit for bodily injury and property damage shall be a minimum of $1,000,000 per occurrence. If claims made, the claims-made, the claims made form shall provide that the period of coverage shall be: Continuous coverage for the term of the Contract plus the warranty period of at least one (1) year, and an extended discovery period for a minimum of five (5) years, which shall begin at the end of the warranty period.

H. Completed Work Insurance.

SC-5.045 Bonds.

A. *General.*

1. Bonds, when required by the Contract or by Chapter 2253 of the Texas Government Code, shall be executed on forms furnished by or acceptable to OWNER. All bonds signed by an agent must be accompanied by a certified copy of such agent's authority to act.

2. If the surety on any bond furnished by CONTRACTOR is declared bankrupt or becomes insolvent or its right to do business is terminated in the State of Texas or it ceases to meet the requirements of the preceding paragraph, CONTRACTOR shall within ten (10) days thereafter substitute another bond and surety, both of which must be acceptable to OWNER.

3. When Performance Bonds and/or Payment Bonds are required, each shall be issued in an amount of one hundred percent (100%) of the Contract Amount as security for the faithful performance and/or payment of all CONTRACTOR's obligations under the Contract Documents. Performance Bonds and Payment Bonds shall be issued by a solvent surety company authorized to do business in the State of Texas, and shall meet any other requirements established by law or by OWNER pursuant to applicable law. Any surety duly authorized to do business in Texas may write Performance and Payment Bonds on a project without reinsurance to the limit of 10 percent of its capital and surplus. Such a surety must reinsure any obligations over 10 percent.

B. *Performance Bond.*

1. If the Contract Amount exceeds $100,000, CONTRACTOR shall furnish OWNER with a Performance Bond in the form set out by OWNER. The Performance Bond shall be effective for the Contract Time and through all warranty period(s).

2. If the Contract Amount exceeds $50,000 but is less than or equal to $100,000, CONTRACTOR shall furnish OWNER with a Performance Bond in the form set out by OWNER, unless the original Contract Time is 60 Calendar Days or less, in which case CONTRACTOR can agree to the following terms and conditions for payment in lieu of providing a Performance Bond: no money will be paid to CONTRACTOR until completion and acceptance of the Work by OWNER;

CONTRACTOR shall be entitled to receive 95% of the Contract Amount following Final Completion, and the remaining 5% of the Contract Amount following the one year warranty period.

3. If the Contract Amount is less than or equal to $50,000, CONTRACTOR will not be required to furnish a Performance Bond.

4. If a Performance Bond is required to be furnished, it shall extend for the one year warranty period, or longer if the warranty periods are longer.

C. Payment Bond.

1. If the Contract Amount exceeds $50,000, CONTRACTOR shall furnish OWNER with a Payment Bond in the form set out by OWNER.

2. If the Contract Amount is less than or equal to $50,000, CONTRACTOR will not be required to furnish a Payment Bond; provided that no money will be paid to CONTRACTOR until completion and acceptance of the Work by OWNER.

D. Power of Attorney. Each bond shall be accompanied by a valid Power of-Attorney (issued by the surety company and attached, signed and sealed with the corporate embossed seal, to the bond) authorizing the attorney in fact who signs the bond to commit the company to the terms of the bond, and stating any limit in the amount for which the attorney can issue a single bond.

E. Bond Indemnification. The process of requiring and accepting bonds and making claims thereunder shall be conducted in compliance with Tex. Gov't Code, Chapter 2253. IF FOR ANY REASON A STATUTORY PAYMENT OR PERFORMANCE BOND IS NOT HONORED BY THE SURETY, THE CONTRACTOR SHALL FULLY INDEMNIFY AND HOLD THE OWNER HARMLESS OF AND FROM ANY COSTS, LOSSES, OBLIGATIONS OR LIABILITIES IT INCURS AS A RESULT.

F. Furnishing Bond Information. OWNER shall furnish certified copies of the payment bond and the related Contract to any qualified person seeking copies who complies with Tex. Gov't Code, §2253.026.

G. Claims on Payment Bonds. Claims on payment bonds must be sent directly to the CONTRACTOR and his surety in accordance with Tex. Gov't Code § 2253.041. All Payment Bond claimants are cautioned that no lien exists on the funds unpaid to the CONTRACTOR on such Contract, and that reliance on notices sent to the OWNER may result in loss of their rights against the CONTRACTOR and/or his surety. The OWNER is not responsible in any manner to a claimant for collection of unpaid bills, and accepts no such responsibility because of any representation by any agent or employee.

H. Payment Claims when Payment Bond is not required. The rights of Subcontractors regarding payment are governed by Tex. Prop. Code, §§53.231 – 53.239 when the value of the Contract between the OWNER and the CONTRACTOR is less than $25,000.00. These provisions set out the requirements for filing a valid lien on funds unpaid to the CONTRACTOR as of

the time of filing the claim, actions necessary to release the lien and satisfaction of such claim.

I. Minimum Standards for Sureties. Sureties shall be listed on the US Department of the Treasury's Listing Approved Sureties stating companies holding Certificates of Authority as acceptable sureties on Federal Bonds and acceptable reinsuring companies (Department Circular 570).

SC-6.02 LABOR; WORKING HOURS

Add the following defined terms to Paragraph 6.02:

C. Regular Working Hours shall be between 7 am and until 30 minutes prior to sunset or 6 pm whichever is earlier, and, if previously authorized in writing by the City of Georgetown, between 9:00 am and 6:00 pm on Saturdays, Sundays, or Legal Holidays.

D. The Contractor shall work Regular Working Hours on normal Working Days as defined in Section 1.01.

Add the following provision on prevailing wages to Paragraph 6.02:

E. PREVAILING WAGE RATES: This Contract is subject to Government Code Chapter 2258 concerning payment of Prevailing Wage Rates. The OWNER will determine the general prevailing rates in accordance with Government Code Chapter 2258. The applicable provisions include, but are not limited to the following:

§ 2258.021. Right to be Paid Prevailing Wage Rates

(a) A worker employed on a public work by or on behalf of the state or a political subdivision of the state shall be paid:

(1) not less than the general prevailing rate of per diem wages for work of a similar character in the locality in which the work is performed; and

(2) not less than the general prevailing rate of per diem wages for legal holiday and overtime work.

(b) Subsection (a) does not apply to maintenance work.

(c) A worker is employed on a public work for the purposes of this section if the worker is employed by a contractor or subcontractor in the execution of a contract for the public work with the state, a political subdivision of the state, or any officer or public body of the state or a political subdivision of the state.

§ 2258.023. Prevailing Wage Rates to be Paid by Contractor and Subcontractor; Penalty

(a) The contractor who is awarded a contract by a public body or a subcontractor of the contractor shall pay not less than the rates determined under Section 2258.022 to a worker employed by it in the execution of the contract.

(b) A contractor or subcontractor who violates this section shall pay to the state or a political subdivision of the state on whose behalf the contract is made, $60 for each worker employed for each calendar day or part of the day that the worker is paid less than the wage rates stipulated in the contract. A public body awarding a contract shall specify this penalty in the contract.

(c) A contractor or subcontractor does not violate this section if a public body awarding a contract does not determine the prevailing wage rates and specify the rates in the contract as provided by Section 2258.022.

(d) The public body shall use any money collected under this section to offset the costs incurred in the administration of this chapter.

(e) A municipality is entitled to collect a penalty under this section only if the municipality has a population of more than 10,000.

§ 2258.024. Records

(a) A contractor and subcontractor shall keep a record showing:

(1) the name and occupation of each worker employed by the contractor or subcontractor in the construction of the public work; and

(2) the actual per diem wages paid to each worker.

(b) The record shall be open at all reasonable hours to inspection by the officers and agents of the public body.

§ 2258.025. Payment Greater Than Prevailing Rate Not Prohibited

This chapter does not prohibit the payment to a worker employed on a public work an amount greater than the general prevailing rate of per diem wages.

SC-6.13.B Trench and Shoring Safety

Add the following Paragraph 6.13.B.1.

As required by the Texas Health & Safety Code, Title 9, Subtitle A, Chapter 756, Subchapter C, Contractor is required to comply with the trench safety standards of the Occupational Safety and Health Administration, 29 C.F.R. 1926, Subpart P, Excavations, in effect during the period of construction of the Project. Contractor agrees to comply with, and Owner agrees to include in the Bid Documents, a copy of any special shoring requirements, if any, required for the Project. Owner agrees to furnish to Contractor a copy of any geotechnical information that was obtained by the Owner for use by the Contractor in the design of the trench safety system, if any.

SC-14.02 Article 14 - Payments To Contractor And Completion

Change the 1st sentence in Paragraph 14.02.C.1 from "Ten days after presentation of the Application for Payment to OWNER…" to "Thirty (30) days after presentation of the Application for Payment to OWNER…"

SC-17.02 Delete the second sentence of Paragraph 17.02.

SC-17.07 Independent Contractor

Add the following Paragraph 17.07:

The Contract shall not be construed as creating an employer/employee relationship, a partnership, or a joint venture. The Contractor's services shall be those of an independent contractor. The Contractor agrees and understands that the Contract does not grant any rights or privileges established for employees of the Owner.

SC-17.08 Prohibition of Gratuities

Add the following Paragraph 17.08:

The Owner may, by Written Notice to the Contractor, terminate the Contract without liability if is determined by the Owner that gratuities were offered or given by the Contractor or any agent or representative of the Contractor to any officer or employee of the Owner with a view toward securing the Contract or securing favorable treatment with respect to the awarding or amending or the making of any determinations with respect to the performing of such Contract. In the event the Contract is terminated by the Owner pursuant to this provision, the Owner shall be entitled, in addition to any other rights and remedies, to recover or withhold the amount of the cost incurred by the Contractor in providing such gratuities.

SC-17.09 Prohibition Against Personal Interest in Contracts

Add the following Paragraph 17.09

No officer, employee, independent consultant, or elected official of the Owner who is involved in the development, evaluation, or decision-making process of the performance of any solicitation shall have a financial interest, direct or indirect, in the Contract resulting from that solicitation. Any violation of this provision, with the knowledge, expressed or implied, of the Contractor shall render the Contract voidable by the Owner.

SC-18. Article 18 – Right to Audit

Add the following Article 18.

18.01 Whenever the Owner enters into any type of contractual arrangement with the Contractor, then the Contractor's "records" shall upon reasonable notice be open to inspection and subject to audit and/or reproduction during normal business working hours. The Owner's representative, or an outside representative engaged by the Owner, may perform such audits. The Contractor shall maintain all records relating to this Contract for four (4) years from the date of final payment under this Contract, or until pending litigation has been completely and fully resolved, whichever occurs later.

18.02 The Owner shall have the exclusive right to examine the records of the Contractor. The term "records" as referred to herein shall include any and all information, materials and data of every kind and character, including without limitation records, books, papers, documents, contracts, schedules, commitments, arrangements, notes, daily diaries, reports, drawings, receipts, vouchers and memoranda, and any and all other agreements, sources of information and matters that may, in the Owner's judgment, have any bearing on or pertain to any matters, rights, duties or obligations under or covered by any contract document. Such records shall include (hard copy, as well as electronic data), written policies and procedures, time sheets, payroll registers, cancelled checks, personnel file data, correspondence, e-mail, general ledger entries, and any other record in the Contractor's possession which may have a bearing on matters of interest to the Owner in connection with the Contractor's dealings with the Owner (all of the foregoing are hereinafter referred to as "records"). In addition, the Contractor shall permit interviews of employees as well as agents, representatives, vendors, Subcontractors and other third parties paid by the Contractor to the extent necessary to adequately permit evaluation and verification of the following:

A. The Contractor's compliance with Contract Documents;

B. The Contractor's compliance with the Owner's business ethics policies; and

C. If necessary, the extent of the Work performed by the Contractor at the time of Contract termination.

18.03 The Contractor shall require all payees (examples of payees include Subcontractors, insurance agents, material suppliers, etc.) to comply with the provisions of this Article 17 by securing the requirements hereof in a written agreement between the Contractor and payee. Such requirements include a flow-down right of audit provision in contracts with payees that also apply to Subcontractors and Sub-subcontractors, material suppliers, etc. The Contractor shall cooperate fully and shall require Payees and all of the Contractor's Subcontractors to cooperate fully in furnishing or in making available to the Owner from time to time whenever requested, in an expeditious manner, any and all such information, materials, and data.

18.04 The Owner's authorized representative or designee shall have reasonable access to the Contractor's facilities, shall be allowed to interview all current or former employees to discuss matters pertinent to the performance of this Contract, and shall be provided adequate and appropriate work space in order to conduct audits in compliance with this Article 17.

18.05 If an audit inspection or examination in accordance with this Article 17 discloses overpricing or overcharges of any nature by the Contractor to the Owner in excess of one-half of one percent (0.5%) of the total contract billings, then the reasonable actual cost of the Owner's audit shall be reimbursed to the Owner by the Contractor. Any adjustments and/or payments, which must be made as a result of any such audit or inspection of the Contractor's invoices and/or records, shall be made within a reasonable amount of time (not to exceed 90 days) from presentation of the Owner's findings to the Contractor.

18.06 The Contractor shall take reasonable actions to prevent any actions or conditions which could result in a conflict with the Owner's best interests. These obligations shall apply to the activities of the Contractor's employees, agents, Subcontractors, etc. in their dealings and relations with the Owner's current and former employees and their relatives. For example, the Contractor's employees, agents or Subcontractors should not make or provide to be made any employment, gifts, extravagant entertainment, payments, loans or other considerations to the Owner's representatives, employees or their relatives.

18.07 It is also understood and agreed by the Contractor that any solicitation of gifts or any other item of value by anyone representing the Owner is to be reported within two (2) business working days to the

Owner at the following telephone number: 512-930-3723. Failure to report any such solicitations or offers shall be deemed a material breach of contract entitling the Owner to pursue damages resulting from the failure to comply with this provision.

END OF SECTION

THIS PAGE INTENTIONALLY LEFT BLANK.

SECTION 00800 HH
CITY OF GEORGETOWN
ADOPTED PREVAILING WAGE RATES

"General Decision Number: TX20230023 01/06/2023

Superseded General Decision Number: TX20220023

State: Texas

Construction Types: Heavy (Sewer/Water Treating Plant and Sewer/Incid. to Hwy.)

Counties: Bell, Bosque, Coryell, Falls, Freestone, Hamilton, Hill, Lampasas, Leon, Limestone, McLennan, Milam, Mills, Navarro, Robertson and Williamson Counties in Texas.

WATER & SEWAGE TREATMENT PLANTS AND LIFT PUMP STATIONS

Note: Contracts subject to the Davis-Bacon Act are generally required to pay at least the applicable minimum wage rate required under Executive Order 14026 or Executive Order 13658. Please note that these Executive Orders apply to covered contracts entered into by the federal government that are subject to the Davis-Bacon Act itself, but do not apply to contracts subject only to the Davis-Bacon Related Acts, including those set forth at 29 CFR 5.1(a)(2)-(60).

If the contract is entered into on or after January 30, 2022, or the contract is renewed or extended (e.g., an option is exercised) on or after January 30, 2022:	. Executive Order 14026 generally applies to the contract. . The contractor must pay all covered workers at least $16.20 per hour (or the applicable wage rate listed on this wage determination, if it is higher) for all hours spent performing on the contract in 2023.
If the contract was awarded on or between January 1, 2015 and January 29, 2022, and the contract is not renewed or extended on or after January 30, 2022:	. Executive Order 13658 generally applies to the contract. . The contractor must pay all covered workers at least $12.15 per hour (or the applicable wage rate listed on this wage determination, if it is higher) for all hours spent performing on that contract in 2023.

The applicable Executive Order minimum wage rate will be adjusted annually. If this contract is covered by one of the Executive Orders and a classification considered necessary for performance of work on the contract does not appear on this wage determination, the contractor must still submit a conformance request.

Additional information on contractor requirements and worker protections under the Executive Orders is available at http://www.dol.gov/whd/govcontracts.

Modification Number Publication Date
0 01/06/2023

SUTX1990-003 02/09/1990

	Rates	Fringes
CARPENTER	$ 9.00 **	
CEMENT MASON/CONCRETE FINISHER	$ 8.00 **	
ELECTRICIAN	$ 13.45 **	.80+8 1/2%
Form Builder	$ 7.25 **	
Form Setter	$ 7.25 **	
LABORER	$ 7.25 **	
Pipelayer	$ 7.50 **	
Power equipment operators:		
Bulldozers	$ 7.25 **	
Cranes, Clamshells, Backhoes, Derricks, Dragline, Shovels	$ 7.25 **	
Front End Loaders	$ 10.00 **	
Scrapers	$ 7.25 **	
Steel Setter	$ 9.50 **	
Steel Worker	$ 7.25 **	
Truck drivers:		
Tandem Axles	$ 7.25 **	
Transit Mix	$ 7.25 **	
Utility Laborer	$ 7.25 **	

WELDERS - Receive rate prescribed for craft performing operation to which welding is incidental

---

WELDERS - Receive rate prescribed for craft performing operation to which welding is incidental.

==========

** Workers in this classification may be entitled to a higher minimum wage under Executive Order 14026 ($16.20) or 13658 ($12.15). Please see the Note at the top of the wage determination for more information.

Note: Executive Order (EO) 13706, Establishing Paid Sick Leave for Federal Contractors applies to all contracts subject to the Davis-Bacon Act for which the contract is awarded (and any solicitation was issued) on or after January 1, 2017. If this contract is covered by the EO, the contractor must provide employees with 1 hour of paid sick leave for every 30 hours they work, up to 56 hours of paid sick leave each year. Employees must be permitted to use paid sick leave for their own illness, injury or other health-related needs, including preventive care; to assist a family member (or person who is

like family to the employee) who is ill, injured, or has other health-related needs, including preventive care; or for reasons resulting from, or to assist a family member (or person who is like family to the employee) who is a victim of, domestic violence, sexual assault, or stalking. Additional information on contractor requirements and worker protections under the EO is available at https://www.dol.gov/agencies/whd/government-contracts.

Unlisted classifications needed for work not included within the scope of the classifications listed may be added after award only as provided in the labor standards contract clauses (29CFR 5.5 (a) (1) (ii)).

The body of each wage determination lists the classification and wage rates that have been found to be prevailing for the cited type(s) of construction in the area covered by the wage determination. The classifications are listed in alphabetical order of ""identifiers"" that indicate whether the particular rate is a union rate (current union negotiated rate for local), a survey rate (weighted average rate) or a union average rate (weighted union average rate).

Union Rate Identifiers

A four letter classification abbreviation identifier enclosed in dotted lines beginning with characters other than ""SU"" or ""UAVG"" denotes that the union classification and rate were prevailing for that classification in the survey. Example: PLUM0198-005 07/01/2014. PLUM is an abbreviation identifier of the union which prevailed in the survey for this classification, which in this example would be Plumbers. 0198 indicates the local union number or district council number where applicable, i.e., Plumbers Local 0198. The next number, 005 in the example, is an internal number used in processing the wage determination. 07/01/2014 is the effective date of the most current negotiated rate, which in this example is July 1, 2014.

Union prevailing wage rates are updated to reflect all rate changes in the collective bargaining agreement (CBA) governing this classification and rate.

Survey Rate Identifiers

Classifications listed under the ""SU"" identifier indicate that no one rate prevailed for this classification in the survey and the published rate is derived by computing a weighted average rate based on all the rates reported in the survey for that classification. As this weighted average rate includes all rates reported in the survey, it may include both union and non-union rates. Example: SULA2012-007 5/13/2014. SU indicates the rates are survey rates based on a weighted average calculation of rates and are not majority rates. LA indicates the State of Louisiana. 2012 is the year of survey on which these classifications and rates are based. The next number, 007 in the example, is an internal number used in producing the wage determination. 5/13/2014 indicates the survey completion date for the classifications and rates under that identifier.

Survey wage rates are not updated and remain in effect until a

new survey is conducted.

Union Average Rate Identifiers

Classification(s) listed under the UAVG identifier indicate that no single majority rate prevailed for those classifications; however, 100% of the data reported for the classifications was union data. EXAMPLE: UAVG-OH-0010 08/29/2014. UAVG indicates that the rate is a weighted union average rate. OH indicates the state. The next number, 0010 in the example, is an internal number used in producing the wage determination. 08/29/2014 indicates the survey completion date for the classifications and rates under that identifier.

A UAVG rate will be updated once a year, usually in January of each year, to reflect a weighted average of the current negotiated/CBA rate of the union locals from which the rate is based.

WAGE DETERMINATION APPEALS PROCESS

1.) Has there been an initial decision in the matter? This can be:

* an existing published wage determination
* a survey underlying a wage determination
* a Wage and Hour Division letter setting forth a position on a wage determination matter
* a conformance (additional classification and rate) ruling

On survey related matters, initial contact, including requests for summaries of surveys, should be with the Wage and Hour National Office because National Office has responsibility for the Davis-Bacon survey program. If the response from this initial contact is not satisfactory, then the process described in 2.) and 3.) should be followed.

With regard to any other matter not yet ripe for the formal process described here, initial contact should be with the Branch of Construction Wage Determinations. Write to:

Branch of Construction Wage Determinations
Wage and Hour Division
U.S. Department of Labor
200 Constitution Avenue, N.W.
Washington, DC 20210

2.) If the answer to the question in 1.) is yes, then an interested party (those affected by the action) can request review and reconsideration from the Wage and Hour Administrator (See 29 CFR Part 1.8 and 29 CFR Part 7). Write to:

Wage and Hour Administrator
U.S. Department of Labor
200 Constitution Avenue, N.W.
Washington, DC 20210

The request should be accompanied by a full statement of the interested party's position and by any information (wage payment data, project description, area practice material, etc.) that the requestor considers relevant to the issue.

3.) If the decision of the Administrator is not favorable, an interested party may appeal directly to the Administrative Review Board (formerly the Wage Appeals Board). Write to:

Administrative Review Board
U.S. Department of Labor
200 Constitution Avenue, N.W.
Washington, DC 20210

4.) All decisions by the Administrative Review Board are final.

==========

END OF GENERAL DECISIO"

CITY OF GEORGETOWN ADOPTED PREVAILING WAGE RATES

Position	Recommended hourly rate
Acoustic Ceiling Installer	Davis Bacon
Air Tool Operator	Davis Bacon
Asphalt Distributor Operator	Davis Bacon
Asphalt Paving Machine Operator	Davis Bacon
Asphalt Raker	Davis Bacon
Asphalt Shoveler	Davis Bacon
Boilermaker	Davis Bacon
Bricklayer/Stone Mason, Entry Level	9.00
Bricklayer/Stone Mason, Journeyman	14.00
Broom or Sweeper Operator	Davis Bacon
Bulldozer Operator, Over 150 HP	Davis Bacon
Bulldozer Operator, Under 150 HP	Davis Bacon
Carpenter Finisher, Journeyman	15.97
Carpenter, Entry Level	10.00
Carpenter, Intermediate Level	11.88
Caulker	Davis Bacon
Cement Finisher, Entry Level	Davis Bacon
Cement finisher, Journeyman	Davis Bacon
Cement Mason, Intermediate Level	Davis Bacon
Concrete Finisher-Paving	Davis Bacon
Concrete Finisher-Structures	Davis Bacon
Concrete Paving Curbing Machine Operator	Davis Bacon
Concrete Paving Finishing Machine Operator	Davis Bacon

Concrete Rubber	Davis Bacon
Construction and Building Inspectors	Davis Bacon
Crane, Clamshell, Backhoe, Derrick, Dragline, Shovel Operator	Davis Bacon
Drywall System Installer, Entry Level	10.00
Drywall System Installer, Journeyman	13.00
Earth Drillers, Except Oil and Gas	DB
Electrician, Apprentice	13.00
Electrician, Entry Level	9.00
Electrician, Journeyman (Certificate)	19.00
Electrician, Master/Certified	22.67
Elevator/Escalator Installer	Davis Bacon
Elevator/Escalator Mechanic	Davis Bacon
Equipment Operator, Crane	19.00
Equipment Operator, Heavy	11.75
Equipment Operator, Light	10.00
Explosive Workers, Ordnance Handling Experts and Blasters	Davis Bacon
Fireproofing Installer	Davis Bacon
First-line Supervisors/Managers of Construction Trades and Extraction Workers	Davis Bacon
Flagger	Davis Bacon
Floor Layer, Helper	Davis Bacon
Floor Layer, Resilient Floor Installer	Davis Bacon
Form Builder/Setter, Structures	Davis Bacon
Form Setter, Paving and Curb	Davis Bacon
Foundation Drill Operator, Crawler Mounted	Davis Bacon
Foundation Drill Operator, Truck Mounted	Davis Bacon

Front End Loader Operator	Davis Bacon
Gardener	Davis Bacon
Glazier	Davis Bacon
Ground Man	Davis Bacon
Hazardous Materials Removal Workers	Davis Bacon
Highway Maintenance Workers	Davis Bacon
HVAC Mechanic, Journeyman	16.25
HVAC Sheet Metal Worker, Intermediate Level	11.75
HVAC, Entry Level	9.00
Insulation Workers, Floor, Ceiling, Walls	Davis Bacon
Insulation Workers, Mechanical	Davis Bacon
Iron Worker, Entry Level	10.00
Iron Worker, Reinforcing, Intermediate Level	14.50
Iron Worker, Structural Journeyman	14.50
Irrigation Technician	Davis Bacon
Laborer, Common	8.50
Laborer, Utility	9.67
Landscape Foreman	Davis Bacon
Lather	Davis Bacon
Lineman	Davis Bacon
Mechanic	Davis Bacon
Mechanic Lead, Journeyman	15.67
Millwright	Davis Bacon
Mixer Operator	Davis Bacon
Mixer Operator, Concrete Paving	Davis Bacon

Motor Grader Operator, Fine Grade	Davis Bacon
Motor Grader Operator, Rough	Davis Bacon
Oiler	Davis Bacon
Painter, Sprayer	10.63
Painter, Structures	10.63
Painter, Wallcover	10.63
Pavement Marking Machine Operator	Davis Bacon
Pipefitter	Davis Bacon
Pipelayer	Davis Bacon
Piping/Duct Insulator	Davis Bacon
Planer Operator	Davis Bacon
Plumber (excluding HVAC), Intermediate Level	12.00
Plumber Lead, Journeyman	20.00
Powder Man	Davis Bacon
Reinforcing Steel Setter, Entry Level	10.00
Reinforcing Steel Setter, Journeyman	11.67
Reinforcing Steel Setter, Paving	Davis Bacon
Roller Operator, Pneumatic, Self-Propelled	Davis Bacon
Roller Operator, Steel Wheel, Plant Mix Pavement	Davis Bacon
Roofer, Metal	11.00
Roofing Foreman	Davis Bacon
Sandblaster	Davis Bacon
Scraper Operator	Davis Bacon
Servicer	Davis Bacon
Sheet Metal Mechanic, Journeyman	17.50

Sign Installer (PGM)	Davis Bacon
Slip Form Machine Operator	Davis Bacon
Spreader Box Operator	Davis Bacon
Structural Steel Worker	Davis Bacon
Tapers	Davis Bacon
Terrazzo Workers and Finishers	Davis Bacon
Tile and Marble Worker, Journeyman	Davis Bacon
Tile Setter, Intermediate Level	Davis Bacon
Tractor Operator, Crawler Type	Davis Bacon
Traveling Mixer Operator	Davis Bacon
Trenching Machine Operator, Heavy	Davis Bacon
Truck Driver Tandem Axle Semi-Trailer	13.00
Truck Driver, Lowboy-Float	Davis Bacon
Truck Driver, Single Axle, heavy	Davis Bacon
Truck Driver, Single Axle, Light	13.44
Wagon Drill, Boring Machine, Post hole Driller Operator	Davis Bacon
Waterproofer	Davis Bacon
Welder Apprentice	10.00
Welder Journeyman	18.00
Work Zone Barricade Servicer	Davis Bacon

Engineers Joint Documents Committee
Design and Construction Related Documents
Instructions and License Agreement

Instructions

Before you use any EJCDC document:

1. Read the License Agreement. You agree to it and are bound by its terms when you use the EJCDC document.

2. Make sure that you have the correct version for your word processing software.

How to Use:

1. While EJCDC has expended considerable effort to make the software translations exact, it can be that a few document controls (e.g., bold, underline) did not carry over.

2. Similarly, your software may change the font specification if the font is not available in your system. It will choose a font that is close in appearance. In this event, the pagination may not match the control set.

3. If you modify the document, you must follow the instructions in the License Agreement about notification.

4. Also note the instruction in the License Agreement about the EJCDC copyright.

License Agreement

You should carefully read the following terms and conditions before using this document. Commencement of use of this document indicates your acceptance of these terms and conditions. If you do not agree to them, you should promptly return the materials to the vendor, and your money will be refunded.

The Engineers Joint Contract Documents Committee ("EJCDC") provides **EJCDC Design and Construction Related Documents** and licenses their use worldwide. You assume sole responsibility for the selection of specific documents or portions thereof to achieve your intended results, and for the installation, use, and results obtained from **EJCDC Design and Construction Related Documents**.

You acknowledge that you understand that the text of the contract documents of **EJCDC Design and Construction Related Documents** has important legal consequences and that consultation with an attorney is recommended with respect to use or modification of the text. You further acknowledge that EJCDC documents are protected by the copyright laws of the United States.

License:

You have a limited nonexclusive license to:

1. Use **EJCDC Design and Construction Related Documents** on any number of machines owned, leased or rented by your company or organization.

2. Use **EJCDC Design and Construction Related Documents** in printed form for bona fide contract documents.

3. Copy **EJCDC Design and Construction Related Documents** into any machine readable or printed form for backup or modification purposes in support of your use of **EJCDC Design and Construction Related Documents**.

You agree that you will:

1. Reproduce and include EJCDC's copyright notice on any printed or machine-readable copy, modification, or portion merged into another document or program. All proprietary rights in **EJCDC Design and Construction Related Documents** are and shall remain the property of EJCDC.

2. Not represent that any of the contract documents you generate from **EJCDC Design and Construction Related Documents** are EJCDC documents unless (i) the document text is used without alteration or (ii) all additions and changes to, and deletions from, the text are clearly shown.

You may not use, copy, modify, or transfer EJCDC Design and Construction Related Documents, or any copy, modification or merged portion, in whole or in part, except as expressly provided for in this license. Reproduction of EJCDC Design and Construction Related Documents in printed or machine-readable format for resale or educational purposes is expressly prohibited.

If you transfer possession of any copy, modification or merged portion of EJCDC Design and Construction Related Documents to another party, your license is automatically terminated.

Term:
The license is effective until terminated. You may terminate it at any time by destroying **EJCDC Design and Construction Related Documents** altogether with all copies, modifications and merged portions in any form. It will also terminate upon conditions set forth elsewhere in this Agreement or if you fail to comply with any term or condition of this Agreement. You agree upon such termination to destroy **EJCDC Design and Construction Related Documents** along with all copies, modifications and merged portions in any form.

Limited Warranty:
EJCDC warrants the CDs and diskettes on which **EJCDC Design and Construction Related Documents** is furnished to be free from defects in materials and workmanship under normal use for a period of ninety (90) days from the date of delivery to you as evidenced by a copy of your receipt.

There is no other warranty of any kind, either expressed or implied, including, but not limited to the implied warranties of merchantability and fitness for a particular purpose. Some states do not allow the exclusion of implied warranties, so the above exclusion may not apply to you. This warranty gives you specific legal rights and you may also have other rights which vary from state to state.

EJCDC does not warrant that the functions contained in **EJCDC Design and Construction Related Documents** will meet your requirements or that the operation of **EJCDC Design and Construction Related Documents** will be uninterrupted or error free.

Limitations of Remedies:
EJCDC's entire liability and your exclusive remedy shall be:

1. the replacement of any document not meeting EJCDC's "Limited Warranty" which is returned to EJCDC's selling agent with a copy of your receipt, or

2. if EJCDC's selling agent is unable to deliver a replacement CD or diskette which is free of defects in materials and workmanship, you may terminate this Agreement by returning EJCDC Document and your money will be refunded.

In no event will EJCDC be liable to you for any damages, including any lost profits, lost savings or other incidental or consequential damages arising out of the use or inability to use **EJCDC Design and Construction Related Documents** even if EJCDC has been advised of the possibility of such damages, or for any claim by any other party.

Some states do not allow the limitation or exclusion of liability for incidental or consequential damages, so the above limitation or exclusion may not apply to you.

General:
You may not sublicense, assign, or transfer this license except as expressly provided in this Agreement. Any attempt otherwise to sublicense, assign, or transfer any of the rights, duties, or obligations hereunder is void.

This Agreement shall be governed by the laws of the State of Virginia. Should you have any questions concerning this Agreement, you may contact EJCDC by writing to:

Arthur Schwartz, Esq.
General Counsel
National Society of Professional Engineers
1420 King Street
Alexandria, VA 22314

Phone: (703) 684-2845
Fax: (703) 836-4875
e-mail: aschwartz@nspe.org

You acknowledge that you have read this agreement, understand it and agree to be bound by its terms and conditions. You further agree that it is the complete and exclusive statement of the agreement between us which supersedes any proposal or prior agreement, oral or written, and any other communications between us relating to the subject matter of this agreement.

Change Order

No. _____

Date of Issuance: _____ Effective Date: _____

Project: Cedar Breaks and D B Wood Lift Stations	Owner: City of Georgetown	Owner's Contract No.:
Project No.: PRJ000101		Date of Contract:
Contractor:		Engineer's Project No.: 272644

The Contract Documents are modified as follows upon execution of this Change Order:

Description:

_____

_____

Attachments (list documents supporting change):

_____

CHANGE IN CONTRACT PRICE:	CHANGE IN CONTRACT TIMES:
Original Contract Price: $_____	Original Contract Times: ☐ Working days ☐ Calendar days Substantial completion (days or date): _____ Ready for final payment (days or date): _____
[Increase] [Decrease] from previously approved Change Orders No. _____ to No. $_____	[Increase] [Decrease] from previously approved Change Orders No. _____ to No. _____: Substantial completion (days): _____ Ready for final payment (days): _____
Contract Price prior to this Change Order: $_____	Contract Times prior to this Change Order: Substantial completion (days or date): _____ Ready for final payment (days or date): _____
[Increase] [Decrease] of this Change Order: $_____	[Increase] [Decrease] of this Change Order: Substantial completion (days or date): _____ Ready for final payment (days or date): _____
Contract Price incorporating this Change Order: $_____	Contract Times with all approved Change Orders: Substantial completion (days or date): _____ Ready for final payment (days or date): _____

RECOMMENDED:	ACCEPTED:	ACCEPTED:
By: _____	By: _____	By: _____
Engineer (Authorized Signature)	Owner (Authorized Signature)	Contractor (Authorized Signature)
Date: _____	Date: _____	Date: _____

Approved by Funding Agency (if applicable):

_____ Date: _____

A. GENERAL INFORMATION

This document was developed to provide a uniform format for handling contract changes that affect Contract Price or Contract Times. Changes that have been initiated by a Work Change Directive must be incorporated into a subsequent Change Order if they affect Price or Times.

Changes that affect Contract Price or Contract Times should be promptly covered by a Change Order. The practice of accumulating Change Orders to reduce the administrative burden may lead to unnecessary disputes.

If Milestones have been listed in the Agreement, any effect of a Change Order thereon should be addressed.

For supplemental instructions and minor changes not involving a change in the Contract Price or Contract Times, a Field Order should be used.

B. COMPLETING THE CHANGE ORDER FORM

Engineer normally initiates the form, including a description of the changes involved and attachments based upon documents and proposals submitted by Contractor, or requests from Owner, or both.

Once Engineer has completed and signed the form, all copies should be sent to Owner or Contractor for approval, depending on whether the Change Order is a true order to the Contractor or the formalization of a negotiated agreement for a previously performed change. After approval by one contracting party, all copies should be sent to the other party for approval. Engineer should make distribution of executed copies after approval by both parties.

If a change only applies to price or to times, cross out the part of the tabulation that does not apply.

TECHNICAL SPECIFICATIONS

SECTION CIP1 – DEFINITION OF TERMS

CIP1.01 DEFINITIONS

A. Wherever in these specifications or in other contract documents, the following terms or pronouns in place of them are used, the intent and meaning shall be interpreted as follows:

1. CITY - The City of Georgetown, party of the First Part.

2. COUNCIL - The Georgetown City Council.

3. COUNTY - A political Subdivision of the State.

4. ENGINEER - Representative of the City.
*ENGINEER - Representative of the Contractor or the Developer.

5. INSPECTOR - The authorized representative of the City assigned to inspect any or all parts of the work and the materials to be used therein.

6. CONTRACTOR - The individual, firm or corporation or any combination thereof, Party of the Second Part, with which the contract is made by the City, Developer or Public Cooperation.

7. SUPERINTENDENT - The representative of the Contractor authorized to receive and fulfill instructions from the Engineer or representative of the City, and who shall supervise and direct the construction.

8. PAVEMENT DESIGN MANUAL - Texas Department of Transportation manual outlining procedure to be followed in the design and control of asphaltic concrete and portland cement concrete mixes for structures and pavements.

9. MANUAL OF TESTING PROCEDURES - Texas Department of Transportation Materials and Tests Division manual outlining testing methods and procedures.

10. PLANS - The drawings approved by the City, or true reproductions thereof, which show the location, character, dimensions, and details of the work and which are a part of the contract. Plans and specifications to be prepared by a Professional Engineer registered in the State of Texas.

11. SPECIFICATIONS - The directions, provisions and requirements contained herein or in the Special Provisions, supplemented by such "Special Provisions or Standards" as may be issued or made pertaining to the method and manner or performing the work or qualities of materials to be furnished. Where the phrases "or directed by the City", "ordered by the City", or "to the satisfaction of the City" occur, it is to be understood that the directions, orders, or instructions of which they relate are within the limitations of, and authorized by the contract. "Special Provisions" will cover work pertaining to a particular project included in the proposal but not covered by the specifications. Where reference is made to specifications of ASTM, AWWA, AASHTO or Bulletins and Manuals of the Texas Department of Transportation it shall be construed to mean the latest standard or tentative standard in effect on the date of the proposal.

12. RIGHT OF WAY - The land provided for a highway or street, owned by the City of Georgetown or the municipality in which the highway or street is in.

13. ROADWAY - The portion of the highway or street within the limits of construction.

14. ROADBED - The graded portion of the roadway between the intersection of top and side slopes upon which the base course, surface course, shoulders and median are constructed.

15. SUBGRADE - That portion of the roadbed upon which the subbase, base, or pavement structure is to be placed.

16. BRIDGES - Structures of over 20-foot span measured from face to face of abutments, or in case of copings, from face to face of copings, and multiple span structures of over 20-foot length, measured between inside of end walls along the centerline of the roadbed.

17. CULVERTS - All drainage structures not defined as bridges.

18. TEMPORARY STRUCTURES - All temporary bridges and structures required to maintain traffic during the construction of the work.

19. SUBSTRUCTURE - That part of the structure below the bridge seats or below the springing lines of arches. Parapets, back walls and wing walls of abutments shall be considered as parts of the substructure.

20. SUPERSTRUCTURE - The part of the structure above the bridge seats or above the springing lines of arches.

21. THE WORK - The work shall include the furnishing of all labor, materials, equipment, and other incidentals necessary or convenient to the successful completion of the project and the carrying out of all the duties and obligations imposed by the contract.

22. PROJECT - The specific section or sections of the highway or street together with all appurtenances and construction to be performed thereon under the contract.

23. ASTM - American Society for Testing Materials.

24. AASHTO - American Association of State Highway and Transportation Officials.

25. ANSI - American National Standards Institute.

26. API - American Petroleum Institute.

27. UL - Underwriters Laboratory, Inc.

28. SCREENS AND SIEVES - As defined by the ASTM.

29. HIGHWAY, STREET OR ROAD - A general term denoting a public way for purposes of vehicular travel, including the entire area within the right of way. Recommended usage in urban areas-highway or road.

30. ARTERIAL HIGHWAY OR STREET - A general term denoting a highway or street primarily for through traffic, usually on a continuous route.

31. MAJOR STREET OR MAJOR HIGHWAY - An arterial highway or street with intersections at grade and direct access to abutting property, and on which geometric design and traffic control measures are used to expedite the safe movement of through traffic.

32. THROUGH STREET OR THROUGH HIGHWAY - Every highway, street, or portion thereof at the entrance to which vehicular traffic from intersecting highways or streets is required by law to stop before entering or crossing the same and when stop signs are erected.

33. LOCAL STREET OR LOCAL ROAD - A street or road primarily for access to residence, business, or other abutting property.

END OF SECTION

TECHNICAL SPECIFICATIONS

SECTION CIP2 - ABBREVIATIONS

CIP2.01 SCOPE

A. Whenever in these Contract Documents or Specifications the following abbreviations are used, the intent and meaning shall be interpreted as follows:

1.	AA	Aluminum Association
2.	AAMA	Architectural Aluminum Manufacturers' Association
3.	AASHTO	American Association of State Highway and Transportation Officials
4.	ACI	American Concrete Institute
5.	AFBMA	Anti-Friction Bearing Manufacturers' Association
6.	AGA	American Gas Association
7.	AGMA	American Gear Manufacturers' Association
8.	AISC	American Institute of Steel Construction
9.	AISI	American Iron and Steel Institute
10.	AITC	American Institute of Timber Construction
11.	AMCA	Air Moving and Conditioning Association
12.	ANSI	American National Standards Institute
13.	APA	American Plywood Association
14.	API	American Petroleum Institute
15.	AREA	American Railway Engineering Association
16.	ASAE	American Society of Agricultural Engineers
17.	ASCE	American Society of Civil Engineers
18.	ASHRAE	American Society of Heating, Refrigerating and Air-Conditioning Engineers, Inc.
19.	ASME	American Society of Mechanical Engineers
20.	ASTM	American Society of Testing and Materials
21.	AWI	Architectural Woodwork Institute
22.	AWPA	American Wood Preservers' Association
23.	AWPB	American Wood Preservers' Bureau
24.	AWS	American Welding Society
25.	AWWA	American Water Works Association
26.	BHMA	Builders' Hardware Manufacturers' Association
27.	CBMA	Certified Ballast Manufacturers' Association
28.	CDA	Copper Development Association
29.	CISPI	Cast Iron Soil Pipe Institute
30.	CMAA	Crane Manufacturers' Association of America
31.	CRSI	Concrete Reinforcing Steel Institute
32.	Fed. Spec.	Federal Specifications

33.	HI	Hydraulic Institute
34.	HMI	Hoist Manufacturers' Institute
35.	ICBO	International Conference of Building Officials
36.	IEEE	Institute of Electrical and Electronics Engineers, Inc.
37.	IPCEA	Insulated Power Cable Engineer's Association
38.	MMA	Monorail Manufacturers' Association
39.	NACE	National Association of Coatings Engineers
40.	NBMA	National Builders' Hardware Association
41.	NEC	National Electrical Code
42.	NEMA	National Electrical Manufacturers' Association
43.	NESC	National Electric Safety Code
44.	NFPA	National Fire Protection Association
45.	NLMA	National Lumber Manufacturers' Association
46.	NWMA	National Woodwork Manufacturers' Association
47.	OECI	Overhead Electrical Crane Institute
48.	OSHA	Occupational Safety and Health Act (both Federal & State)
49.	PS	Product Standards Sections - U.S. Department of Commerce
50.	RMA	Rubber Manufacturers' Association
51.	SAE	Society of Automotive Engineers
52.	SSPC	Steel Structures Painting Council
53.	TCA	Tile Council of America
54.	TxDOT	Texas Department of Transportation
55.	TEMA	Tubular Exchanger Manufacturers' Association
56.	UBC	Uniform Building Code
57.	UL	Underwriter's Laboratories, Inc.
58.	WWPA	Western Wood Products Association

END OF SECTION

TECHNICAL SPECIFICATIONS

SECTION CIP3 – SUMMARY OF WORK

CIP3.01 SCOPE OF WORK

A. This specification covers the requirements for constructing the Cedar Breaks and D B Wood List Stations project as shown on the Drawings and as specified herein.

B. The Work is located within the City of Georgetown on undeveloped land off Cedar Breaks Road and D B Wood Road, Georgetown, TX 78628, as shown on the Location Plan included in the Plans and as described in Section 00300 (Proposal Form).

C. The Cedar Breaks Lift Station and D B Wood Lift Station are part of a wastewater system expansion undertaken by the City of Georgetown to construct a new wastewater collection and conveyance system between the South Lake Water Treatment Plant located at the intersection of Cedar Breaks Road and Crockett Gardens Road and extending over three miles to the existing South Fork Interceptor located next to the South Fork of the San Gabriel River. This project is for the two lift station as shown on the drawings. The pipeline project consisting of force mains and gravity sewer will be constructed separately. A Summary of Work is presented below.

D. The Work (as shown on the Drawings) includes, but is not necessarily limited to, the following:

1. Mobilization: Including move-in costs, site preparation, temporary construction trailers, temporary power, water, insurance, bonds, and other ancillary items necessary to establish an active construction work site.
2. Trench and Excavation, including rock excavation, Safety and Protection for trenches for piping and excavations for below grade structures.
3. Construction of the **Cedar Breaks Lift Station**, including three (2 duty, 1 standby) submersible wastewater pumps, including piping, valves, appurtenances, electrical, instrumentation, concrete paving, and site work for the completed lift station and site.

   Construction of the **D B Wood Lift Station**, including an influent channel, bifurcated wetwell, slide gates, three (2 duty, 1 standby) submersible wastewater pumps, including piping, valves, appurtenances, electrical, instrumentation, concrete paving and other site work for the completed lift station and site.

4. **Site Work**: Consists of site preparation, temporary sedimentation/erosion control, grading, seeding, new paving, and related work. Construction of new buried and non-buried piping, valves, and appurtenances, manholes and vaults.
5. Furnish and delivery to Owner two **Trailer-Mounted Diesel Bypass Pumps** and appurtenances per the December 8, 2023, Xylem quotation included in the Project Manual appendix.
6. Other improvements based on the Owner-held contingencies listed in the Bid Form.

CIP3.02 WORK SEQUENCE

A. Perform work in sequence as agreed upon at the Pre-Construction Conference and as noted below and herein.

B. Contractor shall coordinate all work sequencing and shutdowns with the Owner's representative and Engineer. Contractor shall provide a 72-hour notice to the Owner prior to any tie-ins and connections to an existing or operating system.

C. The following construction sequencing issues, critical tie-ins, and other constraints shall be considered by the Contractor in development of the construction schedule. These items are presented to assist the Contractor and are not all-inclusive.

a. Construction Constraints:

i. Construction for these facilities may not begin until the City authorizes work pending receipt of TCEQ Organized Sewerage Collection System (SCS) and Water Pollution Abatement Plan (WPAP) permit approvals. General Contractor may process and order equipment upon Notice to Proceed.

ii. Timing for Permanent Power to Site: Available by **December 2024** from PEC for the Cedar Breaks Lift Station and Georgetown Electric for the D B Wood Lift Station. Contractor to coordinate temporary power needs per Section 015000.

iii. Contractor may only clear the site within the limits of construction and the temporary construction easements as shown on the drawings.

iv. Excavations for all Structures.

1. Contractor shall allow 48-hours for subgrade conditions of finished excavation to be inspected and evaluated by the Owner's Geotechnical engineer for all of the new structures and the Contractor shall furnish and provide backhoe with hoe ram equipment necessary for testing procedures. If the subgrade conditions require remedial improvements and void treatments, as recommended and deemed necessary by the Owner's Geotechnical engineer at time of inspection and evaluation of subgrade conditions, Contractor shall allow for additional time in their base construction schedule as outlined herein in this CIP3.

v. Contractor shall include 90 calendar days on the baseline schedule against the critical path for time delays due to void mitigation applicable to Phase 1 and an additional 30 calendar days against the critical path for time delays to Phase 2. These days and costs associated for General Contractor staffing and overhead due to delays are to be included in the bid and are NOT part of any allowance items. The allowances for voids only apply to direct costs born by the Contractor to a subcontractor for addressing the voids.

b. Construction Sequence:

i. Contractor shall acquire all permits necessary to begin construction and mobilize to site.

ii. Installation of Erosion/Sedimentation Controls and temporary fencing shall be performed prior to beginning any construction.

iii. Contractor to mobilize to site and coordinate temporary utilities.

iv. Contractor to clear site and rough grade work.

v. Complete and receive approval for all applicable submittals to get equipment in fabrication and delivered.

vi. Complete Construction of the lift stations as identified on drawings.

1. Related electrical, instrumentation (instruments and PLCs along with related programming) and site/civil (this includes the perimeter fence, gate and all site security) improvements.

2. Complete and receive approval for all applicable O&M Manuals for Phase 1.

3. Complete startup of all equipment and supporting infrastructure, including the SCADA system, and training of Owner's staff for Phase 1.

4. Once the list stations construction is substantially completed, Owner will request Partial Utilization per Section 00700 General Conditions, Article 14.05. Contractor, Owner, and Engineer will coordinate to finalize to verify the work is Substantially Complete. This must be completed by the schedule shown in Section 00500. Liquidated Damages will be assessed to the Contractor for failure to meet the substantial completion and final completion milestones as outlined in Division 0.

5. Coordinate commissioning of the lift stations to include a minimum of ten business days of successful operation at each lift station. Contractor shall coordinate the commissioning and testing of the lift stations with the Owner, Engineer and separate Pipeline General Contractor. Operation of the lift stations can only be operated when the pipelines construction by others is complete, tested and accepted by the Owner.

6. The warranty period shall commence upon the date of Substantial Completion, refer to CIP 16 – Warranties and Section 017700 Closeout Procedure for further information.

CIP3.03 PROGRESS OF THE WORK

A. The Work shall be started within 7 days following the effective date of the Notice to Proceed, and the Work shall be executed with such progress as may be required to prevent any delay to the general completion of the project. The Work shall be executed at such times and in or on such parts of the project, and with such personnel, materials, and equipment to assure completion of the Work in the time established by the Agreement.

B. If the Contractor, for his convenience and at his own expense, should desire to carry on his work at night or outside regular hours, he shall submit a written approval request to the City and he shall allow ample time for satisfactory arrangements to be made for inspecting the work in progress. The Contractor shall pay the expenses for extra inspection required for work outside regular hours. Normal working hours for this purpose are Monday through Friday, 7:00 a.m. to 6:00 p.m. The Contractor shall light the different parts of the Project as required to comply with all applicable Federal and State regulations and with all applicable requirements of the City of Georgetown.

CIP3.04 CONSTRUCTION SCHEDULE

A. The Contractor shall, within five (5) days after the effective date of the Notice to Proceed, provide and submit to the City for approval, the Schedule for the project. A complete updated schedule shall be submitted with monthly pay requests. The Schedule shall account for all the work of the Contractor and his Subcontractors and suppliers. In addition to all reasonably important construction activities, the Schedule shall provide for the proper sequence of construction considering the various crafts, purchasing time, submittal approval, material delivery, equipment fabrication, and similar time-consuming factors.

B. The Schedule shall include, as a minimum, the earliest starting and finish dates, and latest starting and finish dates, and the total float for each task or item. The Contractor shall update (monitor) the schedule as necessary and shall submit to the City a copy of the updated schedule (monthly) at the same time the pay estimate is prepared. The schedule shall contain all of the items of the Periodic Estimate and Pay Schedule.

C. While the Contractor bears full responsibility for scheduling all phases and stages of the Work to ensure its successful prosecution and completion within the time specified in accordance with all provisions of these Specifications, the Contractor is specifically required to complete fully or complete such stages of work to enable his Subcontractors and suppliers to complete their work within the respective times specified.

D. If the City determines that construction activities are falling behind schedule at any time during the construction period, the City may require the Contractor to add equipment and/or construction forces, including increases in working hours, in such quantities as are required to bring construction activities back on schedule. Upon receipt of written communication from the City requiring such addition, the Contractor shall furnish same at no additional cost to the City.

CIP3.05 PRECONSTRUCTION CONFERENCE

A. A Pre-Construction Conference shall be held as soon as possible after Award of Contract and before work is started. The conference will be held at a location selected by the City. The conference will be attended by:

1. Contractor's Office Representative.

2. Contractor's General Superintendent

3. Any subcontractors' or suppliers' representatives whom the Contractor may desire to invite or the City may request.

4. Engineer's Representatives.

5. City’s Representatives.

6. Other individuals that the City may invite.

B. A suggested format would include but not be limited to the following subjects:

1. Check of required bonds and insurance certifications.
2. Liquidated damages.
3. Shop drawing submittal and approval procedure.
4. Chain of command, direction of correspondence, and coordinating responsibility between Contractors.
5. Schedule of periodic job meetings for all involved.
6. Introduction of the key project personnel.
7. Equal opportunity requirements.
8. Laboratory testing of material requirements.
9. Inventory of material stored on site provisions.
10. Progress estimate and payment procedure.

11. Discussion of Contractor's Safety program.

12. Scheduled plan for work requiring interruption of existing operations.

13. Review of the construction Plans and Specifications.

14. Discussion of Contractor's storage facilities for the Project.

15. Construction Schedule

C. The City's Representative will preside at the conference, prepare the minutes of the meeting and distribute copies of same to all participants who so request by fully completing the attendance form to be circulated at the beginning of the conference.

CIP3.06 CONSTRUCTION MEETINGS

A. Periodic Construction meetings shall be held at intervals designated by the City, generally monthly to review the progress at the project, submittals, upcoming activities, pay requests, etc. The Contractor is expected to have at least the project Superintendent present for all meetings. Attendance at the meetings shall not be directly paid for but shall be considered subsidiary to the items of the Contract.

B. In the event the Contractor is 30 minutes late or more or fails to attend a Construction meeting without 48 hours prior notice, the Contractor shall be billed the time for the Engineer(s) to represent the City at $200.00 per hour up to one (1) hour.

CIP3.07 COORDINATION WITH CITY'S OPERATIONS AND EXISTING FACILITIES

A. Several parts of the proposed Work under this Contract may connect with or into existing facilities. The Contractor shall carefully plan the schedule of that portion of the Work which will affect the existing facilities. Such plans and schedules shall be subject to the approval of the City of Georgetown.

B. Work which requires shutdown or in any way impedes the operations of existing facilities shall be closely coordinated with the City of Georgetown. A minimum of 48 hours written notice shall be given to the City of Georgetown.

C. Immediately after the award of a Contract for this Project, the Contractor shall outline and submit a scheduled plan for installation of the work, which requires interruption of operations.

CIP3.08 CONTRACTOR'S USE OF PREMISES

A. Contractor shall assume full responsibility for security of all materials and equipment stored on the site.

B. If directed by the City, move any stored items, which interfere with operations of the City, other contractors, or the public.

C. Obtain and pay for use of additional storage or work areas at no additional cost to the City if needed to perform the Work.

D. Contractor shall submit to the City for approval a plan of operations, designating proposed areas of the property to be used for his operations, material storage, equipment storage, employee's parking, offices and shops. The area shall affect minimal interference with the present operations.

E. Any damage to existing facilities, including contamination, which may be caused by Contractor's personnel, callers, visitors, materials or equipment, shall be repaired or corrected at the sole expense of the Contractor.

F. Any fence that is damaged or removed by the Contractor will be replaced at the Contractor's expense in like kind, and to the satisfaction of the City.

G. Contractor shall be responsible for ingress and egress at the site, shall coordinate traffic flow on roads leading to the work site, and shall submit and obtain approval for traffic control plans from the entity having jurisdiction.

END OF SECTION

SECTION CIP4 – SITE CONDITIONS

CIP4.01 SCOPE OF WORK

A. This specification covers the requirements for investigation and verification of site conditions for the Project.

CIP4.02 SUBSURFACE INFORMATION

A. No subsurface investigations have been made by the City. The Bidder / Contractor shall be responsible for any subsurface explorations and tests deemed necessary.

B. No test borings have been made by the City to indicate subsurface materials.

CIP4.03 SITE INVESTIGATION AND REPRESENTATION

A. The Bidder / Contractor acknowledges that he has satisfied himself as to the nature and location of the work; the general and local conditions, particularly those bearing upon availability of transportation, disposal, handling and storage of materials, availability of labor, water, electric power, roads, and uncertainties of weather, river/stream stages, or similar physical conditions at the site; the conformation and conditions of the ground; the character of equipment and facilities needed preliminary to and during the prosecution of the work and all other matters which can in any way affect the work or the cost thereof under this Contract.

B. The Contractor further acknowledges that he has satisfied himself as to the character, quality, and quantity of surface and subsurface materials to be encountered from inspecting the site and from evaluating information derived from exploratory work, if any, that has been done by the City as presented in the geotechnical report, as well as from information presented herein as a part of these Contract Documents. Any failure by the Contractor to acquaint himself with all the available information will not relieve him from responsibility for properly estimating the difficulty or cost of successfully performing the work. Neither the City nor the Engineer assume responsibility for any conclusion or interpretation made by the Contractor on the basis of the information made available by the City or the Engineer.

C. Existing ground profiles shown on the Plans were plotted from field surveys.

CIP4.04 RESPONSIBILITY FOR UTILITY PROPERTIES AND SERVICE

A. Known utilities and structures adjacent to or encountered in the work are shown on the Plans. The locations shown are taken from existing records and the best information available from existing plans; however, it is expected that there may be some discrepancies and omissions in the locations and quantities of utilities and structures shown. Those shown are for the convenience of the Contractor only, and no responsibility is assumed by either the City or the Engineer for their accuracy or completeness.

B. Neither the City nor its officers or agents shall be responsible to the Contractor for damages as a result of the Contractor's failure to protect utilities encountered in the work.

C. The Contractor shall at all times provide unobstructed access to fire hydrants and structures as per Fire Code, underground conduit, manholes, and water or gas valve boxes.

D. Where the Contractor's operations could cause damage which might result in considerable expense, loss, or inconvenience when his operations are adjacent to or near railway, telegraph, telephone, television, power, oil, gas, water, sewer, irrigation, or other systems, no operations shall be commenced until the Contractor has made all arrangements necessary for the protection of these utilities and services.

E. The Contractor shall notify all utility offices that are affected by the construction operation at least 15 days in advance of commencing construction operations. The Contractor shall not expose any utility without first obtaining permission from the affected agency. Once permission has been granted, locate and, if necessary, expose and provide temporary support for all existing underground utilities in advance

of operations.

F. The Contractor shall be solely and directly responsible to the City and operators of such utility properties for any damage, injury, expense, loss, inconvenience, delay, suits, actions, or claims of any character brought because of any injuries or damage that may result from the construction operations under this Contract.

G. In the event of interruption to domestic water, sewer, storm drain, or other utility services as a result of accidental breakage due to construction operations, the Contractor shall promptly notify the proper authority and cooperate with said authority in restoration of service as promptly as possible and bear all costs of repair.

H. The Contractor shall replace, at his own expense, any and all other existing utilities or structures removed or damaged during construction, unless otherwise provided for in these Contract Documents.

I. Where existing utility lines or structures are so located as to physically conflict with permanent structures to be constructed under this Contract, the conflicting utility line or structure shall be permanently relocated.

J. The Contractor shall give immediate notice to the Engineer, the City and the owner of the utility (where applicable) when a physical conflict is determined to exist.

1. Contractor will not be charged contract time for delays caused by unanticipated conflicts.

2. Contractor shall not charge the City of Georgetown for lost time or down time for unanticipated conflicts.

K. Where existing utility lines or structures are so located as to interfere with the Contractor's prosecution of the work, but do not physically conflict with completed manholes or other permanent structures to be constructed under this Contract, any modification, alteration, or relocation of interfering utility, either permanent or temporary, shall be accomplished at the expense of the Contractor.

CIP4.05 INTERFERING STRUCTURES

A. Take necessary precautions to prevent damage to existing structures whether on the surface, aboveground, or underground. An attempt has been made to show major structures on the Plans. While the information has been compiled from the best available sources, it's completeness and accuracy cannot be guaranteed, and it is presented as a guide to avoid known possible difficulties.

B. Protect existing structures from damage, whether or not they lie within the right-of-way or the limits of the easements obtained by the City. Where existing structures must be removed to properly carry out the work, or are damaged during the work, they shall be restored at the Contractor's own expense to at least their original condition and to the satisfaction of the Engineer.

C. The Contractor may, with the approval of the Engineer and without additional compensation, remove and replace in a condition as good as or better than original, any small interfering structures such as fences and signposts that interfere with the Contractor's operations.

CIP4.06 FIELD RELOCATION

A. During the progress of the work, minor relocations of the work may be necessary. Such relocations shall be made only by direction of the Engineer or the City. If existing structures are encountered that will prevent construction as shown, notify the Engineer before continuing with the work in order that the Engineer may make such field revisions as necessary to avoid conflict with the existing structures. If the Contractor fails to notify the Engineer when an existing structure is encountered and proceeds with the work despite this interference, he shall be responsible for any damage that may occur.

CIP4.07 LAND MONUMENTS

A. The Contractor shall preserve or replace any existing Federal, State, County, City, and private land monuments encountered.

B. Any damaged or destroyed monuments shall be replaced at the sole expense of the Contractor as designated by the controlling authority of the Entity.

CIP4.08 PAYMENT

A. No separate payment will be made for work performed in accordance with this section of the specifications, and the cost thereof shall be included in the appropriate items of the Proposal and Bid Schedule.

END OF SECTION

THIS PAGE INTENTIONALLY LEFT BLANK.

BORING LOGS

City of Georgetown - SLWTP to SFI
Crockett Gardens Rd. to Southwest Byp. | Georgetown, TX
Terracon Project No. 96215381

Terracon
5307 Industrial Oaks Blvd Ste 160
Austin, TX

Boring Log No. B-5

Location: See Exploration Plan
Latitude: 30.6576° Longitude: -97.7301°
Depth (Ft.) Elevation: 812.0 (Ft.) +/-

Model Layer	Graphic Log	Description	Depth (Ft.)	Water Level Observations	Sample Type	Field Test Results	RECOVERY (%) / RQD (%)	Strength Test: Test Type	Strength Test: Compressive Strength (tsf)	Strength Test: Strain (%)	Water Content (%)	Dry Unit Weight (pcf)	Atterberg Limits: LL-PL-PI	Percent Fines
1		**CLAYEY GRAVEL WITH SAND (GC)**, light gray to pale brown, medium dense, with limestone fragments (2.0, 810)				10-10-10 N=20					6.5			
2		**LIMESTONE (EDWARDS GROUP)**, pale brown to light gray, highly fractured, with vugs				50/2"								
			5				75/23	UC	167.64		1.8	137		
		- frequent clayey seams/layers from ~10 to 15 feet	10				35/35							
			15				73/18	UC	109.53		0.5	149		
			20				58/45							
			25				83/62	UC	163.50		3.4	130		
		- void from ~28 to 29 feet												
		- frequent clayey seams/layers from ~30 to 35 feet	30											

See Exploration and Testing Procedures for a description of field and laboratory procedures used and additional data (If any).

See Supporting Information for explanation of symbols and abbreviations.

Notes

Elevation Reference: Elevations were interpolated from a topographic site plan.

Water was observed at ~27 feet upon restart of boring the next day. Water was then observed at ~31 feet upon completion of drilling.

Water Level Observations
No free water observed during augering

Advancement Method
Dry Augered to 5 feet; Mud Rotary thereafter

Abandonment Method
Boring backfilled with Auger Cuttings and/or Bentonite

Drill Rig
Mobile B-57

Hammer Type
Automatic

Driller
Texas Geo Bore

Logged by
Rick / Cobey

Boring Started
09-07-2023

Boring Completed
09-08-2023

City of Georgetown - SLWTP to SFI
Crockett Gardens Rd. to Southwest Byp. | Georgetown, TX
Terracon Project No. 96215381

Terracon
5307 Industrial Oaks Blvd Ste 160
Austin, TX

Boring Log No. B-5

Location: See Exploration Plan
Latitude: 30.6576° Longitude: -97.7301°
Depth (Ft.) Elevation: 812.0 (Ft.) +/-

Model Layer	Graphic Log	Description	Depth (Ft.)	Water Level Observations	Sample Type	Field Test Results	RECOVERY (%) / RQD (%)	Strength Test: Test Type	Strength Test: Compressive Strength (tsf)	Strength Test: Strain (%)	Water Content (%)	Dry Unit Weight (pcf)	Atterberg Limits: LL-PL-PI	Percent Fines
2		**LIMESTONE (EDWARDS GROUP)**, pale brown to light gray, highly fractured, with vugs *(continued)*					45/15							
		35.0 777	35											
		LIMESTONE (EDWARDS GROUP), brown to light brown, highly fractured, with sandy/silty seams					97/42	UC	239.86		0.8	155		
			40				100/33	UC	252.40		1.1	153		
		45.0 767	45											
		Boring Terminated at 45 Feet												

See Exploration and Testing Procedures for a description of field and laboratory procedures used and additional data (If any).

See Supporting Information for explanation of symbols and abbreviations.

Notes

Elevation Reference: Elevations were interpolated from a topographic site plan.

Water was observed at ~27 feet upon restart of boring the next day. Water was then observed at ~31 feet upon completion of drilling.

Water Level Observations
No free water observed during augering

Advancement Method
Dry Augered to 5 feet; Mud Rotary thereafter

Abandonment Method
Boring backfilled with Auger Cuttings and/or Bentonite

Drill Rig
Mobile B-57

Hammer Type
Automatic

Driller
Texas Geo Bore

Logged by
Rick / Cobey

Boring Started
09-07-2023

Boring Completed
09-08-2023

Photo B-5.1: Boring B-5 Samples from 0 to 15 feet

Photo B-5.2: Boring B-5 Core Samples from 15 to 25

Photo B-5.3: Boring B-5 Samples from 25 to 35 feet

Photo B-5.4: Boring B-5 Samples from 35 to 40 feet

Photo B-5.5: Boring B-5 Samples from 40 to 45 feet

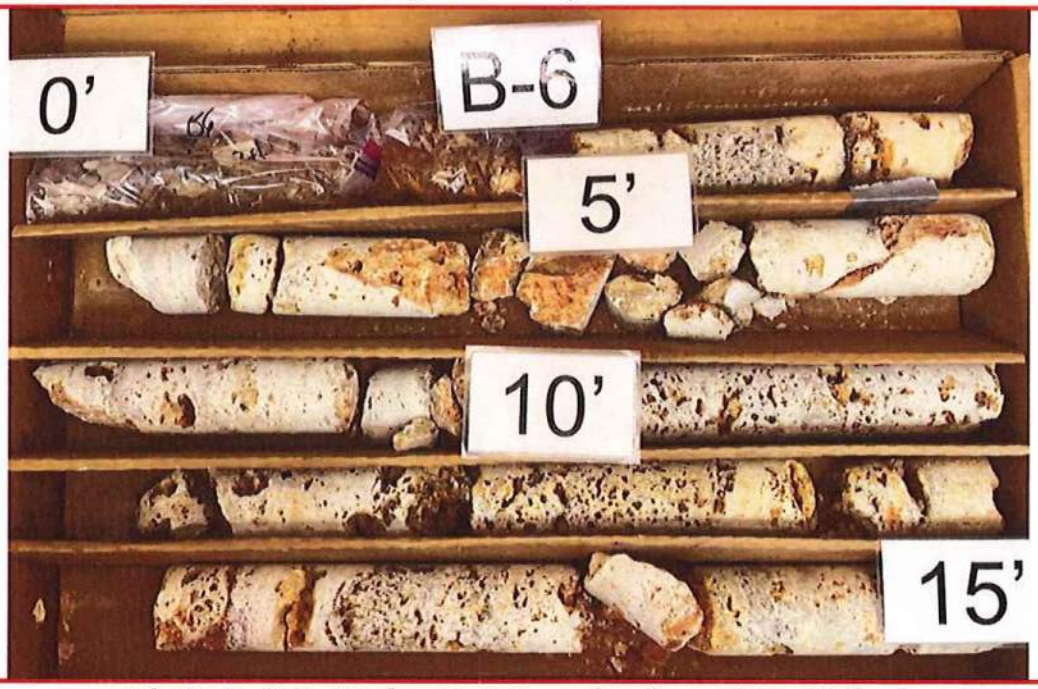

Photo B-6.1: Boring B-6 Samples from 0 to 15 feet

City of Georgetown - SLWTP to SFI
Crockett Gardens Rd. to Southwest Byp. | Georgetown, TX
Terracon Project No. 96215381

Terracon
5307 Industrial Oaks Blvd Ste 160
Austin, TX

Boring Log No. B-13

Location: See Exploration Plan
Latitude: 30.6485° Longitude: -97.7176°
Depth (Ft.) Elevation: 767.0 (Ft.) +/-

Model Layer	Graphic Log	Description	Depth (Ft.)	Elevation	Water Level Observations	Sample Type	Field Test Results	RECOVERY (%) / RQD (%)	Strength Test: Test Type	Strength Test: Compressive Strength (tsf)	Strength Test: Strain (%)	Water Content (%)	Dry Unit Weight (pcf)	Atterberg Limits: LL-PL-PI	Percent Fines
1		**LEAN CLAY WITH SAND (CL)**, dark brown to brown, hard	2.0	765			2-16-22 N=38								
1		**CLAYEY GRAVEL WITH SAND (GC)**, pale brown, dense, with limestone fragments	5.0	762			18-21-17 N=38					6.7			
2		**LIMESTONE (EDWARDS GROUP)**, pale brown to light gray, moderately fractured	5					88/77	UC	201.31		1.1	161		
2			10					95/45							
2			15					100/73	UC	478.46		1.3	166		
2		- marly seam from ~23 to 25½ feet	20					100/67							
2			25					97/78	UC	256.87		1.7	164		
2			30												

See Exploration and Testing Procedures for a description of field and laboratory procedures used and additional data (If any).

See Supporting Information for explanation of symbols and abbreviations.

Water Level Observations
No free water observed during augering

Drill Rig
Mobile B-57

Hammer Type
Automatic

Driller
Texas Geo Bore

Logged by
Rick / Cobey

Boring Started
08-28-2023

Boring Completed
08-29-2023

Notes

Elevation Reference: Elevations were interpolated from a topographic site plan.

Water was observed at ~16 feet upon restart of boring the next day. Water was then observed at ~36 feet upon completion of drilling.

Advancement Method
Dry Augered to 6 feet; Mud Rotary thereafter

Abandonment Method
Boring converted to Piezometer upon completion

City of Georgetown - SLWTP to SFI
Crockett Gardens Rd. to Southwest Byp. | Georgetown, TX
Terracon Project No. 96215381

Terracon
5307 Industrial Oaks Blvd Ste 160
Austin, TX

Boring Log No. B-13

Location: See Exploration Plan
Latitude: 30.6485° Longitude: -97.7176°
Depth (Ft.) Elevation: 767.0 (Ft.) +/-

Model Layer	Graphic Log	Description	Depth (Ft.)	Water Level Observations	Sample Type	Field Test Results	RECOVERY (%) / RQD (%)	Strength Test: Test Type	Strength Test: Compressive Strength (tsf)	Strength Test: Strain (%)	Water Content (%)	Dry Unit Weight (pcf)	Atterberg Limits: LL-PL-PI	Percent Fines
2		**LIMESTONE (EDWARDS GROUP)**, pale brown to light gray, moderately fractured *(continued)*					97/67							
		- highly to extremely fractured, with marly seams below ~35 feet	35				90/0	UC	110.92		1.6	164		
			40				93/0	UC	366.25		2.2	164		
			45				83/30	UC	147.41		2.3	163		
		50.0 717	50											
		Boring Terminated at 50 Feet												

See Exploration and Testing Procedures for a description of field and laboratory procedures used and additional data (If any).

See Supporting Information for explanation of symbols and abbreviations.

Water Level Observations
No free water observed during augering

Drill Rig
Mobile B-57

Hammer Type
Automatic

Driller
Texas Geo Bore

Logged by
Rick / Cobey

Boring Started
08-28-2023

Boring Completed
08-29-2023

Notes

Elevation Reference: Elevations were interpolated from a topographic site plan.

Water was observed at ~16 feet upon restart of boring the next day. Water was then observed at ~36 feet upon completion of drilling.

Advancement Method
Dry Augered to 6 feet; Mud Rotary thereafter

Abandonment Method
Boring converted to Piezometer upon completion

Photo B-12.3: Boring B-12 Samples from 20 to 25 feet

Photo B-13.1: Boring B-13 Samples from 0 to 15 feet

Photo B-13.2: Boring B-13 Samples from 15 to 25 feet

Photo B-13.3: Boring B-13 Samples from 25 to 35 feet

Photo B-13.4: Boring B-13 Samples from 35 to 45 feet

Photo B-13.5: Boring B-13 Samples from 45 to 50 feet

BORING NUMBER B-5

Kohutek Engineering & Testing, Inc.

CLIENT CDM Smith
PROJECT NAME Cedar Breaks - Pastor Water Line
PROJECT NUMBER 218189.002
PROJECT LOCATION DB Woods and Highway 29, Georgetown, Texas
DATE STARTED 12/6/18 **COMPLETED** 12/6/18
NOTES
LOGGED BY JB **CHECKED BY** GLK
GROUND ELEVATION
HOLE SIZE 6 inches

DEPTH (ft)	GRAPHIC LOG	MATERIAL DESCRIPTION	RECOVERY (RQD) %	N VALUE	POCKET PEN. (tsf)	MOISTURE CONTENT (%)	ATTERBERG LIMITS: LIQUID LIMIT	ATTERBERG LIMITS: PLASTIC LIMIT	ATTERBERG LIMITS: PLASTICITY INDEX	SIEVE ANALYSIS: MINUS #4 (%)	SIEVE ANALYSIS: MINUS #200 (%)
0		(CH) fat CLAY, sandy and gravelly, limestone particles, moist, stiff, dark reddish brown			2.75	23	58	20	38		
		...reddish brown				22					
		...very granular (<2")		N=44		13					
		...more clayey (<3')									
10				N=69		22					
		LIMESTONE, weathered, fractured, soft to medium hard, light reddish tan									
		...unweathered, medium hard to hard, light reddish tan									
		...void (<0.5')									
		...vuggy, honeycomb structure	80 (40)								
20											
		...dark tan	50 (18)								
		Ked	90 (50)								
30		...massive, hard to very hard, light gray									
			100 (82)								
			100 (68)								
40											
			100 (87)								
			100 (87)								
50											
			100 (65)								
		Kcp	90 (90)								
60											
		Bottom of borehole at 60.0 feet.									

GEOTECH BH WITHOUT LINES - GINT STD US LAB.GDT - 1/7/19 17:42 - T:\LABSRPT\2018\218189.002\218189.002 B5 AND B7.GPJ

TECHNICAL SPECIFICATIONS

SECTION CIP6 – CONTROL OF WORK

CIP6.01 SCOPE OF WORK

A. This specification covers the requirements for exercising control of work performed on the Project.

CIP6.02 AUTHORITY OF ENGINEER OR INSPECTOR

A. The work will be done in accordance with the Contract, Plans and Specifications. The Engineer or Inspector will decide all questions which may arise as to the quality or acceptability of materials furnished and work performed and the interpretations of the Plans and Specifications. His decisions will be final, and he will have executive authority to enforce and make effective such decisions and orders.

CIP6.03 CONFORMITY WITH PLANS, SPECIFICATIONS AND SPECIAL PROVISIONS

A. All work performed and all materials furnished shall be in reasonable close conformity with the lines, grades, cross sections, dimensions, details, gradations, physical and chemical characteristics of materials in accordance with tolerances shown on the Plans or indicated in the Specifications and Special Provisions. The limits establishing reasonable close conformity will be as defined in these items of the contract.

B. In the event the City finds that the work performed or the materials used are not within reasonable close conformity with the Plans, Specifications and Special Provisions, the affected material or product shall be removed and replaced or otherwise satisfactorily corrected by and at the expense of the Contractor.

C. Deviations from the Plans and approved working drawings as may be required will in all cases be determined by the City and authorized in writing. Before final acceptance of the project is issued by the City, the Contractor shall provide the City with a set of record drawings for the project certified by the Engineer of record.

CIP6.04 COORDINATION OF PLANS, SPECIFICATIONS AND SPECIAL PROVISIONS

A. The Specifications, the accompanying Plans, Special Provisions, and Supplemental Agreements, are essential parts of the Contract, and a requirement occurring in one is as binding as though occurring in all. They are intended to be co-operative and to describe and provide for a complete work. In cases of disagreement, figured dimensions shall govern over scaled dimensions, the Plans shall govern over Specifications, and Special Provisions shall govern over both Specifications and Plans.

CIP6.05 AUTHORITY AND DUTIES OF INSPECTORS

A. Inspectors will be authorized to inspect all work done and all materials furnished. Such inspection may extend to all or to any part of the work and to the preparation or Manufacturer of the materials to be used. Such inspection will not relieve the Contractor from any obligation to perform the work in accordance with the requirements of the Specifications. In case of any dispute arising between the Contractor and the Inspector as to materials furnished or the manner of performing the work, the Inspector will have authority to reject materials or suspend work until the question at issue can be referred to and decided by the City. The Inspector will not be authorized to revoke, alter, enlarge, or release any requirement of these Specifications, nor to approve or accept any portion of work, nor to issue instruction contrary to the Plans and Specifications. He will in no case act as foreman or perform other duties for the Contractor nor interfere with the management of the work.

CIP6.06 PLANT

A. The Contractor shall furnish plant and equipment which will be efficient, appropriate and large enough to secure a satisfactory quality of work and a rate of progress which will insure the completion of the work within the time stipulated in the Proposal. If at any time such plant appears to the Engineer to be inefficient, inappropriate or insufficient for securing the quality of work required or for producing the rate of progress aforesaid, he may order the Contractor to increase the efficiency, change the character or increase the plant and equipment, and the Contractor shall conform to such order. Failure of the Engineer to give such order shall in no way relieve the Contractor of his obligations to secure the quality of work and rate of progress required.

CIP6.07 PRIVATE LAND

A. The Contractor shall not enter or occupy private land outside of easements, except by written permission of the respective landowner.

CIP6.08 PIPE LOCATIONS

A. Pipelines shall be located substantially as indicated on the Plans, but the Engineer and the City reserve the right to make such modifications in locations as may be found desirable to avoid interference with existing structures or for other reasons. Where fittings are noted on the Plans, such notation is for the Contractor's convenience and does not relieve him from laying and jointing different or additional items where required.

CIP6.09 OPEN EXCAVATIONS

A. All open excavations shall be adequately safeguarded by providing temporary barricades, caution signs, lights and other means to prevent accidents to persons, and damage to property. The Contractor shall, at his own expense, provide suitable and safe bridges and other crossings for accommodating travel by pedestrians and workmen. Bridges provided for access during construction shall be removed when no longer required. The length or size of excavation will be controlled by the particular surrounding conditions, but shall always be confined to the limits prescribed by the Engineer. If the excavation becomes a hazard, or if it excessively restricts traffic at any point, the Engineer may require special construction procedures such as limiting the length of the open trench, prohibiting stacking excavated material in the street, and requiring that the trench shall not remain open overnight. The Contractor shall take precautions, such as fences and barricades, to prevent injury to the public due to open trenches. All trenches, excavated material, equipment, or other obstacles, which could be dangerous to the public, shall be well lighted at night. All trenches shall conform to the requirements of OSHA.

CIP6.10 TEST PITS

A. Test pits for the purpose of locating underground pipelines or structures in advance of the construction shall be excavated and backfilled by the Contractor at the direction of the Engineer or the City. Test pits shall be backfilled immediately after their purpose has been satisfied and the surface restored and maintained in a manner satisfactory to the Engineer and the City.

CIP6.11 MAINTENANCE OF TRAFFIC

A. Unless permission to close a street is received in writing from the proper authority, all excavated material shall be placed so that vehicular and pedestrian traffic may be maintained at all times. If the Contractor's operations cause traffic hazards, he shall repair the road surface, provide temporary ways, erect wheel guards or fences, or take other measures for safety satisfactory to the Engineer and the City.

B. Detours around construction will be subject to the approval of the City and the Engineer. Where detours are permitted, the Contractor shall provide all necessary barricades and signs as required to divert the flow of traffic. While traffic is detoured, the Contractor shall expedite construction operations and periods when traffic is being detoured will be strictly controlled by the City.

C. The Contractor shall take precautions to prevent injury to the public due to open trenches. Night watchmen may be required where special hazards exist, or police protection provided for traffic while work is in

progress. The Contractor shall be fully responsible for damage or injuries whether or not police protection has been provided.

CIP6.12 BLASTING

A. No blasting shall be allowed unless approved in writing by the City of Georgetown.

CIP6.13 CARE AND PROTECTION OF PROPERTY

A. The Contractor shall be responsible for the preservation of all public and private property, and shall use every precaution necessary to prevent damage thereto. If any direct or indirect damage is done to public or private property by or on account of any act, omission, neglect, or misconduct in the execution of the work on the part of the Contractor, such property shall be restored by the Contractor, at his expense, to a condition equal or better than existing before the damage was done, or he shall make good the damage in some other manner acceptable to the Engineer and the City.

CIP6.14 MAINTENANCE OF FLOW

A. The Contractor shall, at his own cost, provide for the flow of sewers, drains and water courses interrupted during the progress of the work, and shall immediately cart away and remove all offensive matter. The entire procedure of maintaining existing flow shall be fully discussed with the Engineer and the City well in advance of the interruption of any flow.

CIP6.15 COOPERATION WITHIN THIS CONTRACT

A. The Contractor shall cooperate with Subcontractors or trades, and shall assist in incorporating the work of other trades where necessary or required.

B. Cutting and patching, drilling and fitting shall be carried out where required by the Contractor and his Subcontractor having jurisdiction, unless otherwise indicated herein or directed by the Engineer or the City.

CIP6.16 CLEANUP

A. During the course of the work, the Contractor shall keep the site of his operations in as clean and neat a condition as is possible. The Contractor shall dispose of all rubbish resulting from the construction work and, at the conclusion of the work, he shall remove and haul away any surplus excavation, broken pavement, lumber, equipment, temporary structures, and any other refuse remaining from the construction operations, and shall leave the entire site of the work in a neat and orderly condition.

CIP6.17 FINAL INSPECTION

A. Whenever the work provided for in, and contemplated under, the contract has been satisfactorily completed, the City will make the "Final Inspection". If the work is found to be satisfactory, the Contractor will be notified in writing of the acceptance of the same. The City will require a Certificate of Completion and Final Acceptance from the Inspector before any building, electric or plumbing permits will be issued or any City utilities provided. No such Certificate will be issued until all monuments have been set and record drawing reviewed by the Engineer of Record are provided to the City. If items are found in need of repair or completion, a final punch list will be generated and the items shall be completed by the Contractor. The City will inspect the punch list items one time following their completion. Any subsequent inspections due to inadequate repair or completion of the punch list items shall be paid for by the Contractor or Developer at $200.00 per inspection.

B. Final acceptance of the Project or Development does not relieve the Contractor or Developer of the responsibility of insuring all work shown on the Plans has been completed. If any portion of the work is found at a later date to be inferior or incomplete, the Contractor or Developer shall replace or complete the work at no expense to the City.

CIP6.18 PAYMENT

A. No separate payment will be made for work performed in accordance with this section of the specifications, and the cost thereof shall be included in the appropriate items of the Proposal and Bid Schedule.

END OF SECTION

TECHNICAL SPECIFICATIONS

SECTION CIP7 – CONTROL OF MATERIALS

CIP7.01 SCOPE OF WORK

A. This specification covers the requirements for exercising control of materials used on the Project.

CIP7.02 SOURCES OF SUPPLY AND QUALITY OF MATERIALS

A. The source of supply of each of the materials shall be approved by the City before any deliveries and at the option of the City, may be sampled and tested for determining compliance with the governing Specifications by the City before delivery begins. If it is found after trial that sources of supply previously approved do not produce uniform and satisfactory products, or if the product from any source proves unacceptable at any time, the Contractor shall furnish materials from other approved sources. Only materials conforming to the requirements of these Specifications and approved by the City shall be used in the work. All materials being used are subject to inspection or test at any time during their preparation or use. Any materials which have been tested and accepted at the source of supply may be subjected to a check test after delivery and all materials which, when retested, do not meet approval or have in any way become unfit for use shall not be used in the work.

B. Throughout these Specifications where reference is made to ASTM, AASHTO or bulletins of the Texas Department of Transportation for the quality of materials or sampling and testing, the most current standard, tentative standard or bulletin issued prior to the date of the proposal shall govern.

CIP7.03 SAMPLES AND TEST

A. All materials, before being incorporated in the work, shall be inspected, tested and approved by the City and any work in which materials are used without prior test and approval or written permission of the City may be ordered removed and replaced at the Contractor's expense. The Contractor shall be responsible for and pay for all charges of testing laboratories for services in conjunction with initial tests made on all imported materials to the project site including but not limited to embedment materials, fill materials, backfill materials, select material, crushed limestone base,sub-base, concrete, steel, wood forms, liquid asphalt, aggregate, water, cement, guard rail etc. Sampling and testing of all materials, on the project site will be coordinated by the Contractor and paid for by the City. The selection of the method of test shall be designated by the City. Where tests are required, other than those made in the laboratory, for the purpose of control in the manufacture of a construction item, the Contractor will be required to furnish such facilities and equipment as may be necessary to perform the tests and inspection and shall be responsible for calibration of all test equipment required. When requested, the Contractor shall furnish a complete written statement of the origin, composition, and/or manufacture of any or all materials that are to be used in the work. Testing of all materials and work shall conform to the Texas Department of Transportation "Manual of Testing Procedures" which outlines testing methods and procedures. Other Texas Department of Transportation Bulletins shall apply.

CIP7.04 PAYMENT

A. No separate payment will be made for work performed under this section of the specifications, and the cost thereof shall be included in the appropriate items of the Proposal and Bid Schedule.

END OF SECTION

THIS PAGE INTENTIONALLY LEFT BLANK.

TECHNICAL SPECIFICATIONS

SECTION CIP8 – LEGAL RELATIONS AND RESPONSIBILITIES TO THE PUBLIC

CIP8.01 SCOPE OF WORK

A. This specification covers the requirements for complying with all Federal, State, and local laws, ordinances, and regulations, which in any manner affect the conduct of the work on the Project.

CIP8.02 LAWS TO BE OBSERVED

A. The Contractor shall make himself familiar with and at all times shall observe and comply with all Federal, State, and local laws, ordinances, and regulations which in any manner affect the conduct of the work and shall indemnify and save harmless the City and its representatives against any claim arising from the violation of any such law, ordinance, or regulation, whether by himself or by his employees.

CIP8.03 PERMITS, LICENSES AND TAXES

A. The Contractor shall procure all permits and licenses, pay all charges, fee and taxes, and give all notices necessary and incident to the due and lawful prosecution of the work.

CIP8.04 RESTORATION OF SURFACES OPENED BY PERMIT

A. The Contractor shall not allow any party to make an opening in the highway or street unless a duly authorized permit signed by the owner of the facility is presented. Until the acceptance of the work, the Contractor shall make all necessary repairs in the roadway where openings have been made by due authority.

CIP8.05 PUBLIC SAFETY AND CONVENIENCE

A. The safety of the public and the convenience of traffic shall be regarded as of prime importance. Unless otherwise shown on the Plans or except as herein provided, all portions of the highway and street shall be kept open to traffic. It shall be the entire responsibility of the Contractor to provide for traffic along and across the highway and streets as well as for ingress and egress to private property all as specified herein, as shown on the Plans or as directed by the City.

B. The Contractor shall plan and execute his operations in a manner that will cause the minimum interference with traffic. The Contractor shall secure the City's approval of his proposed plan of operation, sequence of work and methods of providing for the safe passage of traffic before it is placed into operation. If at any time during construction, the approved plan does not accomplish the intended purpose, due to weather or other conditions affecting the safe handling of traffic, the Contractor shall immediately make necessary changes in accordance with the latest version of the TMUTCD to correct the unsatisfactory conditions.

C. If due to rains or other reasons, the shoulders, slopes and ditches become unsatisfactory for handling traffic, construction operations shall be suspended and the base course or surface area shall be opened to traffic. Where the Specifications require that traffic be carried over or along the proposed work, construction operations shall be so prosecuted and new material so kept that placement and spreading will allow the passage of traffic in comfort and safety.

D. Where an Asphalt Surface Treatment is placed for the full width in an operation, traffic shall be carried on the shoulder slopes and ditches where appropriate. During the operation of placing asphalt and aggregate, the surface or pavement shall not be closed to traffic for a period of more than 45 minutes.

E. During construction of proposed structures, unless otherwise shown on the Plans, the Contractor shall provide and maintain detours including temporary structures or crossovers of adequate structural design as may be required for the safety and convenience of the traffic.

F. At night or otherwise, all equipment not in use shall be stored in such manner and such locations as not to interfere with the safe passage of traffic. The Contractor shall provide and maintain flagmen at such points and for such periods of time as may be required to provide for the safety and convenience of public travel and Contractor's personnel, and as directed by the City. Flagmen shall have a sense of responsibility for the safety of the public and the workers, adequate training in safe temporary traffic control practices, average intelligence, good physical condition, including sight, mobility, and hearing, mental alertness and the ability to react in an emergency, courteous but firm manner, and a neat appearance. When directing traffic, flagmen shall use the standard attire, flags and signals and follow the flagging procedure set forth in "Instructions to Flagmen" published by the Texas Department of Transportation.

CIP8.06 BARRICADES AND DANGER, WARNING AND DETOUR SIGNS

A. The Contractor shall place and maintain in good condition, standard barricades and warning signs at each end of the project and at other locations therein as called for on the Plans or as called for in the Contractor's approved plan of operation. The signs shall be of standard design as shown on the Plans and in accordance with Texas Department of Transportation Standards.

B. All barricades and signs remaining in place at night and all points of hazard to traffic shall be either retro-reflective with a material that has a smooth, sealed outer surface or illuminated by lights to show the same shape and similar color both day and night. Signs which refer to construction operations which do not apply after work has ended for the day, shall be moved to points out of the clear zone that are not visible to traffic until construction is resumed.

C. The Contractor may provide special signs not covered by the Plans to protect the traveling public against special conditions or hazards, provided however, that such signs are first approved by the City.

D. Upon completion of the work, all signs and evidences thereof shall be removed by the Contractor.

CIP8.07 PROJECT IDENTIFICATION SIGNAGE

A. Project identification signage shall be in accordance with Section CIP14- PROJECT IDENTIFICATION SIGNAGE. This does not apply to private development Projects.

CIP8.08 USE OF EXPLOSIVES

A. When the use of explosives is necessary for the prosecution of the work, the Contractor shall use the utmost care not to endanger life or property. All explosives shall be stored in a secure manner, and all storage places shall be marked clearly, "DANGEROUS - EXPLOSIVES". The method of storing and handling explosives and highly flammable materials shall conform with Federal and State laws and regulations. **The use of explosives must be approved in writing by the City prior to any use.**

B. In advance of doing any blasting work, involving the use of electric blasting caps within 200 feet of any railroad track, the Contractor shall give at least 24 hours advance notice to the nearest Roadmaster, Section Foreman, Agent, Signal Maintainer or Telegraph Operator with the request that his Superintendent be advised immediately of the pending use of explosives.

CIP8.09 PROTECTION OF ADJOINING PROPERTY

A. The Contractor shall take proper measures to protect the adjacent or adjoining property which might be damaged by any process of construction, and in case of any injury or damage resulting from any act or omission on the part of or on behalf of the Contractor, he shall restore at his own expense the damaged property to a condition equal or better than that existing before such injury or damage was done, or he shall make good such injury or damage in an acceptable manner.

CIP8.10 RESPONSIBILITY FOR DAMAGE CLAIMS

A. The Contractor shall save harmless the City from all suits, actions or claims brought on account of any injuries or damages sustained by any person or property in consequence of any neglect in safeguarding the work by the Contractor, or from any claims or amounts arising or recovered under the "Workmen's Compensation Laws" or any other laws. He shall be responsible for all damage or injury to property of any character occurring during the prosecution of the work resulting from any act, omission, neglect, or misconduct on his part in the manner or method of executing the work; or from his failure to properly execute the work; or from defective work or materials. He shall not be released from such responsibility until all claims have been settled and suitable evidence to that effect furnished the Council.

B. The Contractor's attention is directed to the fact that pipelines and other underground installations as may be shown on the Plans have been taken from the best available information. There may be other pipelines or installations. The Contractor shall save harmless the City from any and all suits or claims resulting from damage by his operations to any pipeline or underground installation.

CIP8.11 CONTRACTOR'S RESPONSIBILITY FOR WORK

A. Until the final acceptance of the work by the City as evidenced in writing, it shall be under the charge and care of the Contractor. The Contractor shall rebuild and make good at his own expense all injuries and damages to the work occurring before its completion and acceptance. In case of suspension of work for any cause, the Contractor shall be responsible for the preservation of all materials. He shall provide suitable drainage of the roadway and shall erect temporary structures where required. The Contractor shall maintain the roadway in good and passable condition until final acceptance.

B. Wherever, in the opinion of the City, any roadway or portion thereof is in suitable condition for travel, it shall be opened to traffic, as may be directed, and such opening shall not be held to be in any way the final acceptance of the roadway or any part of it or as a waiver of any of the provisions of the Contract. Where it is considered by the City to be in the public interest, any substantially completed roadway or portion thereof may be opened to traffic.

CIP8.12 PERSONAL LIABILITY OF PUBLIC OFFICIALS

A. In carrying out the provisions of the contract or in exercising any power or authority granted thereunder, there shall be no liability upon the City or its authorized assistant, either personally or otherwise, as they are agents and representatives of the City.

CIP8.13 PROSECUTION OF WORK

A. Prior to beginning construction operations, the Contractor shall submit to the City a chart or brief outlining the manner of prosecution of the work that he intends to follow in order to complete the Contract. Before any work is started on the project or development, a "Pre-Construction Conference", shall be held between the City, Contractor, Developer and any other interested parties.

CIP8.14 PAYMENT

A. No separate payment shall be made for work performed in accordance with this section of the specifications, and the cost thereof shall be included in the appropriate items of the Proposal and Bid Schedule.

END OF SECTION

THIS PAGE INTENTIONALLY LEFT BLANK.

SECTION CIP9 – ENVIRONMENTAL PROTECTION PROCEDURES

CIP9.01 SCOPE OF WORK

A. This specification covers the requirements for the prevention of environmental pollution in conformance with applicable laws and regulations, during and as the result of construction operations under this Contract. For the purpose of this specification, environmental pollution is defined as the presence of chemical, physical, or biological elements or agents which adversely affect human health or welfare; unfavorably alter ecological balances of importance to human life; affect other species of importance to man; or degrade the utility of the environment for aesthetic and/or recreational purposes.

B. The control of environmental pollution requires consideration of air, water and land, and involves management of noise and solid waste, as well as other pollutants.

C. Schedule and conduct all work in a manner that will minimize the erosion of soils in the area of the work. Provide erosion control measures such as diversion channels, sedimentation or filtration systems, berms, seeding, mulching or other special surface treatments as are required to prevent silting and muddying of streams, rivers, impoundments, lakes, etc. All erosion control measures shall be in place in an area prior to any construction activity in that area. Specific requirements are specified in Section G6-SEDIMENTATION AND TEMPORARY EROSION CONTROL.

D. These Specifications are intended to ensure that construction is achieved with a minimum of disturbance to the existing ecological balance between a water resource and its surroundings. These are general guidelines. It is the Contractor's responsibility to determine the specific construction techniques to meet these guidelines.

E. All phases of sedimentation and erosion control shall comply with and be subject to the approval of the Texas Commission on Environmental Quality, and U.S. EPA.

CIP9.02 SUBMITTALS

A. Within 30 days after the Notice to Proceed, the Contractor shall submit to the Engineer or the City for approval, technical product literature including descriptions of any special operations required, temporary roads and embankments, and all other pertinent data to illustrate conformance to the specification found within.

CIP9.03 APPLICABLE REGULATIONS

A. Comply with all applicable Federal, State and local laws and regulations concerning environmental pollution control and abatement.

CIP9.04 NOTIFICATIONS

A. The Engineer and/or City will notify the Contractor in writing of any non-compliance with the foregoing provisions or of any environmentally objectionable acts and corrective action to be taken. State or local agencies responsible for verification of certain aspects of the environmental protection requirements shall notify the Contractor in writing, through the Engineer, of any non-compliance with State or local requirements. The Contractor shall, after receipt of such notice from the Engineer or from the regulatory agency through the Engineer, immediately take corrective action. Such notice, when delivered to the Contractor or his/her authorized representative at the site of the work, shall be deemed sufficient for the purpose. If the Contractor fails or refuses to comply promptly, the City may issue an order stopping all or part of the work until satisfactory corrective action has been taken. No part of the time lost due to any such stop orders shall be made the subject of a claim for extension of time or for excess costs or damages by the Contractor unless it is later determined that the Contractor was in compliance.

CIP9.05 IMPLEMENTATION

A. Prior to commencement of the work, the Contractor shall meet with the City to develop mutual understandings relative to compliance with this provision and administration of the environmental pollution control program. All environmental and pollution control features shall be in place prior to any construction.

B. Remove temporary environmental control features, when approved by the Engineer, and incorporate permanent control features into the Project at the earliest practical time.

CIP9.06 PROTECTION OF WATERWAYS

A. The Contractor shall observe the rules and regulations of the State of Texas and agencies of the U.S. Government prohibiting the pollution of any lake, stream, river, or wetland by the dumping of any refuse, rubbish, dredge material, or debris therein.

B. Contractors are specifically cautioned that disposal of materials into any waters of the State must conform with the requirements of the Texas Commission on Environmental Quality, and an applicable permit from the U.S. Army Corps of Engineers.

C. The Contractor shall be responsible for providing holding ponds or an approved method which will handle, carry through, or divert around his work all flows, including storm flows and flows created by construction activity, so as to prevent silting of waterways or flooding damage to the property or adjacent properties.

D. The Contractor is responsible for researching the need for a U.S. EPA NPDES permit for the construction site. If one is required, the Contractor is responsible for obtaining the permit and for monitoring the site per the permit requirements until final completion.

CIP9.07 DISPOSAL OF EXCESS EXCAVATION AND OTHER WASTE MATERIALS

A. Excess excavated material not required or suitable for backfill and other waste material must be disposed of at sites approved by the City and Engineer.

B. Unacceptable disposal sites, include, but are not limited to, sites within a wetland or critical habitat and sites where disposal will have a detrimental effect on surface water or groundwater quality.

C. The Contractor may make his own arrangements for disposal subject to submission of proof to the Engineer that the Owner(s) of the proposed site(s) has a valid fill permit issued by the appropriate governmental agency and submission of a haul route plan including a map of the proposed route(s).

D. The Contractor shall provide watertight conveyance of any liquid, semi-liquid, or saturated solids which tend to bleed or leak during transport. No liquid loss from transported materials will be permitted whether being delivered to the construction site or being hauled away for disposal. Fluid materials hauled for disposal must be specifically acceptable at the selected disposal site.

CIP9.08 USE OF CHEMICALS

A. All chemicals used during project construction or furnished for project operation, whether herbicide, pesticide, disinfectant, polymer, reactant or of other classification, must show approval of either the U.S. Environmental Protection Agency or the U.S. Department of Agriculture or any other applicable regulatory agency. Use of all such chemicals and disposal of residues shall be in conformance with the Manufacturer's instructions.

B. Any oil or other hydrocarbon spilled or dumped during construction must be excavated and completely removed from the site prior to final acceptance. Soil contaminated by the Contractor's operations shall become the property of the Contractor, who will bear all costs of testing and disposal.

C. Before a Contractor commences work, the following steps shall be completed.

1. The City will inform the Contractor of his rights under the Texas Hazards Communication Act.

2. The City will provide a copy of the Chemical List giving the hazardous chemicals to which the Contractor, his employees and agents may be exposed to on the Project site.

3. The City will provide copies of all Material Safety Data Sheets (MSDS) to the Contractor for the hazardous chemicals, which he may be exposed to on the Project site.

4. The City will inform the Contractor of his obligation to inform his employees and agents of each of the above requirements.

5. The Contractor shall provide MSDS for all hazardous chemicals he may bring onto the project site that the City's employees may be exposed to.

6. The Contractor shall sign a Contractor Acknowledgement certifying that he/she has received the information provided by the City on hazardous chemicals and maintain the Acknowledgement with the original Contract.

CIP9.09 EROSION CONTROL

A. Provide positive means of erosion control such as shallow ditches around construction to carry off surface water. Erosion control measures, such as siltation basins, silt fences, rock berms, hay check dams, mulching, jute netting and other equivalent techniques, shall be used as appropriate. Flow of surface water into excavated areas shall be prevented. Ditches around the construction area shall also be used to carry away water resulting from dewatering of excavated areas. At the completion of the work, ditches shall be backfilled and the ground surface restored to original condition.

CIP9.10 PROTECTION OF STREAMS

A. Care shall be taken to prevent, or reduce to a minimum, any damage to any stream from pollution by debris, sediment or other material, or from the manipulation of equipment and/or materials in or near such streams. Water that has been used for washing or processing, or that contains oils or sediments that will reduce the quality of the water in the stream, shall not be directly returned to the stream. Such waters will be diverted through a settling basin or filter before being directed into the streams.

B. The Contractor shall not discharge water from dewatering operations directly into any live or intermittent stream, channel, wetlands, surface water or any storm sewer. Water from dewatering operations shall be treated by filtration, settling basins, or other approved method to reduce the amount of sediment contained in the water to allowable levels.

C. All preventative measures shall be taken to avoid spillage of petroleum products and other pollutants. In the event of any spillage, prompt remedial action shall be taken in accordance with a Contingency Action Plan approved by the Texas Commission on Environmental Quality. Contractor shall submit two (2) copies of approved contingency plans to the Engineer.

D. Water being flushed from structures or pipelines after disinfection, with a Cl_2 residue of 2 mg/l or greater, shall be treated with a dechlorination solution, in a method approved by the Engineer, prior to discharge.

CIP9.11 PROTECTION OF LAND RESOURCES

A. Land resources within the project boundaries and outside the limits of permanent work shall be restored to a condition, after completion of construction, that will appear to be natural and not detract from the appearance of the Project. Confine all construction activities to the appropriate areas shown on the Plans.

B. Outside of areas requiring earthwork for the construction of the new facilities, the Contractor shall not deface, injure, or destroy trees or shrubs, nor remove or cut them without prior approval. No ropes, cables, or guys shall be fastened or attached to any existing nearby trees for anchorage unless specifically authorized by the Engineer. Where such special emergency use is permitted, first wrap the trunk with a sufficient thickness of burlap or rags over which softwood cleats shall be tied before any rope, cable, or wire is placed. The Contractor shall in any event be responsible for any damage resulting from such use.

C. Where trees may possibly be defaced, bruised, injured, or otherwise damaged by the Contractor's equipment, dumping or other operations, protect such trees by placing boards, planks, or poles around them in accordance with Section S6- SEDIMENTATION AND TEMPORARY EROSION CONTROL. Monuments and markers shall be protected similarly before beginning operations near them.

D. Any trees or other landscape feature scarred or damaged by the Contractor's equipment or operations shall be restored as nearly as possible to its original condition. The Engineer or the City will decide what method of restoration shall be used and whether damaged trees shall be treated and healed or removed and disposed of.

All scars made on trees by equipment, construction operations, or by the removal of limbs larger than one (1) inch in diameter shall be coated as soon as possible with an approved tree wound dressing. All trimming or pruning shall be performed in an approved manner by experienced workmen with saws or pruning shears. Tree trimming with axes will not be permitted.

Climbing ropes shall be used where necessary for safety. Trees that are to remain, either within or outside established clearing limits, that are subsequently damaged by the Contractor and are beyond saving in the opinion of the Engineer or the City, shall be immediately removed and replaced.

E. The locations of the Contractor's storage, and other construction buildings, required temporarily in the performance of the work, shall be cleared portions of the job site or areas to be cleared as shown on the Plans and shall require written approval of the Engineer and shall not be within wetlands or floodplains. The preservation of the landscape shall be an imperative consideration in the selection of all sites and in the construction of buildings. Plans showing storage facilities shall be submitted for approval of the Engineer or the City.

F. If the Contractor proposes to construct temporary roads or embankments and excavations for plant and/or work areas, he/she shall submit the following for approval at least 10 days prior to scheduled start of such temporary work.

1. A layout of all temporary roads, excavations and embankments to be constructed within the work area.

2. Details of temporary road construction.

3. Plans and cross sections of proposed embankments and their foundations, including a description of proposed materials.

4. A landscaping drawing showing the proposed restoration of the area. Removal of any trees and shrubs outside the limits of existing clearing area shall be indicated. The drawing shall also indicate location of required guard posts or barriers required to control vehicular traffic passing close to trees and shrubs to be maintained undamaged. The drawing shall provide for the obliteration of construction scars as such and shall provide for a natural appearing final condition of the area. Modification of the Contractor's approved drawings shall be made only with the written approval of the Engineer. No unauthorized road construction, excavation or embankment construction including disposal areas will be permitted.

G. Remove all signs of temporary construction facilities such as haul roads, work areas, structures, foundations of temporary structures, stockpiles of excess waste materials, or any other vestiges of construction as directed by the Engineer or the City. It is anticipated that excavation, filling and plowing of roadways will be required to restore the area to near natural conditions which will permit the growth of vegetation thereon. The disturbed areas shall be prepared and seeded as described in Section G7-LOAMING, HYDROSEEDING AND PERMANENT EROSION CONTROL, or as approved by the Engineer or the City.

H. All debris and excess material will be disposed of outside wetland or floodplain areas in an environmentally sound manner.

CIP9.12 PROTECTION OF AIR QUALITY

A. Burning. The use of burning at the project site for the disposal of refuse and debris will not be permitted.

B. Dust Control. The Contractor will be required to maintain all excavations, embankment, subgrade, road bed, base course stockpiles, access roads, plant sites, waste areas, borrow areas, and all other work areas within or outside the project boundaries free from dust which could cause the standards for air pollution to be exceeded, and which would cause a hazard or nuisance to others.

C. An approved method of stabilization consisting of sprinkling or other similar methods will be permitted to control dust. The use of petroleum products is prohibited. The use of chlorides may be permitted with approval from the Engineer or the City.

D. Sprinkling, to be approved, must be repeated at such intervals as to keep all parts of the disturbed area at least damp at all times, and the Contractor must have sufficient competent equipment on the job to accomplish this if sprinkling is used. Dust control shall be performed as the work proceeds and whenever a dust nuisance or hazard occurs, as determined by the Engineer or the City.

CIP9.13 MAINTENANCE OF POLLUTION CONTROL FACILITIES DURING CONSTRUCTION

A. During the life of this Contract, the Contractor shall maintain all facilities constructed for pollution control as long as the operations creating the particular pollutant are being carried out or until the material concerned has become stabilized to the extent that pollution is no longer being created.

CIP9.14 NOISE CONTROL

A. The Contractor shall make every effort to minimize noises caused by his/her operations. Equipment shall be equipped with silencers or mufflers designed to operate with the least possible noise in compliance with State and Federal regulations.

CIP9.15 PAYMENT

A. No separate payment will be made for work performed in accordance with this section of the specifications, and the cost thereof shall be included in the appropriate items of the Proposal and Bid Schedule.

END OF SECTION

THIS PAGE INTENTIONALLY LEFT BLANK.

SECTION CIP10 - SUBMITTALS

CIP10.01 SCOPE OF WORK

A. This specification covers the requirements for submissions applicable to the following work-related submittals: Shop Drawings, Product Data, Samples, Mock Ups, Construction Photographs, and Construction or Submittal Schedules. Detailed submittal requirements will be specified in the technical specification sections.

B. All submittals shall be clearly identified by reference to Specification Section, Paragraph, Drawing No. or Detail as applicable. Submittals shall be clear and legible and of sufficient size for sufficient presentation of data.

CIP10.02 SHOP DRAWINGS, PRODUCT DATA, SAMPLES

A. Shop Drawings

1. Shop drawings as specified in individual work Sections include, but are not necessarily limited to, custom-prepared data such as fabrication and erection/installation (working) drawings, scheduled information, setting diagrams, actual shopwork manufacturing instructions, custom templates, special wiring diagrams, coordination drawings, individual system or equipment inspection and test reports including performance curves and certifications, as applicable to the Work.

2. All shop drawings submitted by subcontractors for approval shall be sent directly to the Contractor for checking. The Contractor shall be responsible for their submission at the proper time so as to prevent delays in delivery of materials.

3. The Contractor shall check all subcontractor's shop drawings regarding measurements, size of members, materials, and details to satisfy himself that they conform to the intent of the Plans and Specifications. Shop drawings found to be inaccurate or otherwise in error shall be returned to the subcontractors for correction before submission thereof.

4. All details on shop drawings submitted for approval shall show clearly the relation of the various parts to the main members and lines of the structure, and where correct fabrication of the work depends upon field measurements, such measurements shall be made and noted on the Plans before being submitted for approval.

B. Product Data

1. Product data as specified in individual Sections, include, but are not necessarily limited to, standard prepared data for manufactured products (sometimes referred to as catalog data), such as the Manufacturer's product specification and installation instructions, availability of colors and patterns, Manufacturer's printed statements of compliance’s and applicability, roughing-in diagrams and templates, catalog cuts, product photographs, standard wiring diagrams, printed performance curves and operational-range diagrams, production or quality control inspection and test reports and certifications, mill reports, product operating and maintenance instructions and recommended spare-parts listing and printed product warranties, as applicable to the work.

C. Samples

1. Samples specified in individual Sections, include, but are not necessarily limited to, physical examples of the work such as sections of manufactured or fabricated work, small cuts or containers of materials, complete units of repetitively-used products, color/texture/pattern swatches and range sets, specimens for coordination of visual effect, graphic symbols and units of work to be used by the Engineer or the City for independent inspection and testing, as applicable to the work.

CIP10.03 CONTRACTOR'S RESPONSIBILITIES

A. The Contractor shall review shop drawings, product data and samples, including those by subcontractors, prior to submission to determine and verify the following:

1. Field measurements

2. Field construction criteria

3. Catalog numbers and similar data

4. Conformance with the Specifications

B. Each shop drawing, sample and product data submitted by the Contractor shall have affixed to it the following Certification Statement including the Contractor's Company name and signed by the Contractor: "Certification Statement: by this submittal, I hereby represent that I have determined and verified all field measurements, field construction criteria, materials, dimensions, catalog numbers and similar data and I have checked and coordinated each item with other applicable approved shop drawings and all Contract requirements." Shop drawings and product data sheets eleven by seventeen (11” x 17”) and smaller shall be bound together in an orderly fashion and bear the above Certification Statement on the cover sheet. The cover sheet shall fully describe the packaged data and include a listing of all items within the package. Provide to the Resident Project Representative a copy of each submittal transmittal sheet for shop drawings, product data and samples at the time of submittal of said drawings, product data and samples to the Engineer or the City.

C. The Contractor shall utilize a 10 character submittal identification numbering system in the following manner:

1. The first character shall be a D, S, P, M, or R, which represents Shop/Working Drawing and other Product Data (D), Sample (S), Preliminary Submittal (P), Operating/Maintenance Manual (M), or Request for Information (R).

2. The next sequence shall be the applicable Specification Section Number.

3. The next three (3) digits shall be the numbers 001 - 999 to sequentially number each initial separate item or drawing submitted under each specific Section number.

4. The last character shall be a letter, A-Z, indicating the submission, or resubmission of the same Drawing (i.e. A=1st submission, B=2nd submission, C=3d submission, etc.). A typical submittal number would be as follows:

D-C2-008-B

D = Shop Drawing

C2 = Specification Section for Concrete for Structures C2

008 = The eighth initial submittal under this specification section

B = The second submission (first resubmission) of that particular shop drawing

D. Notify the Engineer or the City in writing, at the time of submittal, of any deviations in the submittals from the requirements of the Contract Documents.

E. The review and approval of shop drawings, samples or product data by the Engineer or the City shall not relieve the Contractor from his/her responsibility with regard to the fulfillment of the terms of the Contract. All risks of error and omission are assumed by the Contractor and the Engineer or the City will have no responsibility therefore.

F. No portion of the work requiring a shop drawing, sample, or product data shall be started nor shall any materials be fabricated or installed prior to the approval or qualified approval of such item. Fabrication performed, materials purchased or on-site construction accomplished which does not conform to

approved shop drawings and data shall be at the Contractor's risk. The City will not be liable for any expense or delay due to corrections or remedies required to accomplish conformity.

G. Project work, materials, fabrication, and installation shall conform with approved shop drawings, applicable samples, and product data.

CIP10.04 SUBMISSION REQUIREMENTS

A. Make submittals promptly in accordance with approved schedule, and in such sequence as to cause no delay in the Work or in the work of any other Contractor.

B. Each submittal, appropriately coded, will be returned within 30 working days following receipt of submittal by the Engineer or the City.

C. Number of submittals required:

1. Shop Drawings as defined in Paragraph G10.02 A: Six (6) copies.

2. Product Data as defined in Paragraph G10.02 B: Six (6) copies.

3. Samples: Submit the number stated in the respective Specification Sections.

D. Submittals shall contain:

1. The date of submission and the dates of any previous submissions.

2. The Project title and number.

3. Contractor identification.

4. The names of:

a. Contractor
b. Supplier
c. Manufacturer

5. Identification of the product, with the specification section number, page and paragraph(s).

6. Field dimensions, clearly identified as such.

7. Relation to adjacent or critical features of the Work or materials.

8. Applicable standards, such as ASTM or Federal Specification numbers.

9. Identification of deviations from Contract Documents.

10. Identification of revisions on re-submittals.

11. Two (2) five-inch by three-inch (5”x3”) blank space for Contractor and Engineer stamps.

CIP10.05 REVIEW OF SHOP DRAWINGS, PRODUCT DATA, WORKING DRAWINGS AND SAMPLES

A. The review of shop drawings, data, and samples will be for general conformance with the design concept and Contract Documents. They shall not be construed as:

1. Permitting any departure from the Contract requirements;

2. Relieving the Contractor of responsibility for any errors, including details, dimensions, and materials; and/or

3. Approving departures from details furnished by the Engineer or the City, except as otherwise

provided herein.

B. The Contractor remains responsible for details and accuracy, for coordinating the work with all other associated work and trades, for selecting fabrication processes, for techniques of assembly, and for performing work in a safe manner.

C. If the shop drawings, data or samples as submitted describe variations and show a departure from the Contract requirements which the Engineer finds to be in the interest of the City and to be so minor as not to involve a change in Contract Price or time for performance, the Engineer may return the reviewed drawings without noting an exception.

D. Submittals will be returned to the Contractor under one of the following codes.

Code 1 "REVIEWED" is assigned when there are no notations or comments on the submittal. When returned under this code the Contractor may release the equipment and/or material for manufacture.

Code 2 "PROVIDE AS NOTED". This code is assigned when a confirmation of the notations and comments IS NOT required by the Contractor. The Contractor may release the equipment or material for manufacture; however, all notations and comments must be incorporated into the final product.

Code 3 "PROVIDE AS NOTED/CONFIRM". This combination of codes is assigned when a confirmation of the notations and comments IS required by the Contractor. The Contractor may release the equipment or material for manufacture; however, all notations and comments must be incorporated into the final product. This confirmation shall specifically address each omission and nonconforming item that was noted. Confirmation is to be received by the Engineer within 15 calendar days of the date of the Engineer's transmittal requiring the confirmation.

Code 4 "PROVIDE AS NOTED/RESUBMIT". This combination of codes is assigned when notations and comments are extensive enough to require a re-submittal of the package. The Contractor may release the equipment or material for manufacture; however, all notations and comments must be incorporated into the final product. This re-submittal is to address all comments, omissions and non-conforming items that were noted. Re-submittal is to be received by the Engineer within 15 calendar days of the date of the Engineer's transmittal requiring the re-submittal.

Code 5 "NOT APPROVED" is assigned when the submittal does not meet the intent of the Contract Documents. The Contractor must resubmit the entire package revised to bring the submittal into conformance. It may be necessary to resubmit using a different manufacturer/vendor to meet the Contract Documents.

Code 6 "COMMENTS ATTACHED" is assigned where there are comments attached to the returned submittal which provide additional data to aid the Contractor.

Codes 1 through 5 designate the status of the reviewed submittal with Code 6 showing there has been an attachment of additional data.

E. Re-submittals will be handled in the same manner as first submittals. On re-submittals the Contractor shall direct specific attention, in writing on the letter of transmittal and on resubmitted shop drawings by use of revision triangles or other similar methods, to revisions other than the corrections requested by the Engineer, on previous submissions. Any such revisions which are not clearly identified shall be made at the risk of the Contractor. The Contractor shall make corrections to any work done because of this type revision that is not in accordance to the Contract Documents as may be required by the Engineer.

F. Partial submittals may not be reviewed. The Engineer will be the only judge as to the completeness of a submittal. Submittals not complete will be returned to the Contractor, and will be considered "Not Approved" until resubmitted. The Engineer may at his/her option provide a list or mark the submittal directing the Contractor to the areas that are incomplete.

G. If the Contractor considers any correction indicated on the shop drawings to constitute a change to the Contract Documents, the Contractor shall give written notice thereof to the Engineer at least seven (7) working days prior to release for manufacture.

H. When the shop drawings have been completed to the satisfaction of the Engineer, the Contractor shall

carry out the construction in accordance therewith and shall make no further changes therein except upon written instructions from the Engineer.

CIP10.06 DISTRIBUTION

A. Distribute reproductions of approved shop drawings and copies of approved product data and samples, where required, to the job site file and elsewhere as directed by the Engineer. Number of copies shall be as directed by the Engineer but shall not exceed six (6).

CIP10.07 MOCK UPS

A. Mock Up units as specified in individual Sections include, but are not necessarily limited to, complete units of the standard of acceptance for that type of work to be used on the Project. Remove at the completion of the Work or when directed.

CIP10.08 GENERAL PROCEDURES FOR SUBMITTALS

A. Coordination of Submittal Times: Prepare and transmit each submittal sufficiently in advance of performing the related work or other applicable activities, or within the time specified in the individual work sections, of the Specifications, so that the installation will not be delayed by processing times including disapproval and re-submittal (if required), coordination with other submittals, testing, purchasing, fabrication, delivery and similar sequenced activities. No extension of time will be authorized because of the Contractor's failure to transmit submittals sufficiently in advance of the Work.

END OF SECTION

THIS PAGE INTENTIONALLY LEFT BLANK.

TECHNICAL SPECIFICATIONS

SECTION CIP11 – TRENCH SAFETY REQUIREMENTS

CIP11.01 SCOPE OF WORK

A. This specification covers the requirements to plan, design, construct, install, maintain, monitor, modify as necessary, and remove upon completion, a Trench Safety System as specified herein.

B. The requirements of this Section apply to all trenches which equal or exceed a depth of five (5) feet, measured from the ground surface at the highest side of the trench to the trench bottom.

C. All applicable and non-conflicting portions of Section G4- TRENCHING, BACKFILLING AND COMPACTION apply as appropriate.

CIP11.02 SUBMITTALS

A. Within 30 days after the Notice to Proceed, but not less than 10 calendar days prior to execution of any trench excavation operations, the Contractor shall submit a site specific Trench Safety System Conformance Affidavit stating that operations will be conducted in full conformance with the OSHA Standards.

1. The Conformance Letter shall also describe the Trench Safety System techniques proposed to be used on the Project.

2. Specific references to the applicable OSHA Standards sections shall be included for each technique to be used.

B. The Trench Safety System Plan shall be in writing, site specific and sufficiently detailed and clear to be understandable and usable by all personnel who will be executing, supervising and witnessing the trenching operations. A copy of the Trench Safety System Plan shall be available at the site of trenching operations at all times.

C. If borings and/or detailed geotechnical analyses are required to develop the Trench Safety System Plan, they shall be executed by the Contractor at his cost.

D. For trenches having depths greater than the various limits given in the OSHA Standards (8, 12 or 20 feet, depending on the techniques used), a site specific protective system shall be designed by a Registered Professional Engineer, registered in the State of Texas experienced in soil mechanics and structural design. The design shall be signed, sealed and dated by the Professional Engineer, and it shall identify those specific locations where the design is applicable.

CIP11.03 GENERAL

A. All materials and products incorporated into the Trench Safety System shall be suitable for their intended uses; shall meet all design criteria and parameters used by the Trench Safety System designer; and shall meet all applicable requirements of OSHA Standards.

CIP11.04 METHODS OF PROVIDING FOR TRENCH SAFETY

A. Protective systems referenced in this Section shall be as defined and described in 29 CFR 1962.652, "Requirements for Protective Systems."

B. It is the duty, responsibility and prerogative of the Contractor to determine the specific applicability of a proposed Trench Safety System for each field condition encountered on the Project. Contractor specifically holds the City, Engineer, and any of their designated representatives harmless in any actions resulting from the failure or inadequacy of the Trench Safety System used to complete the Project.

C. Unless otherwise noted on the drawings or excluded below, Sloping/Benching, Trench Shielding with trench boxes, and/or Sheeting/Shoring/Bracing protective systems may be used on this Project.

D. Restrictions on the use of the various protective systems for this Project are as follows:

1. Sloping or Benching. Allowed with prior approval from the City.

2. Trench Shields/Boxes. No restrictions.

3. Sheeting/Shoring/Bracing. No restrictions.

CIP11.05 INSPECTION DUTIES OF CONTRACTOR

A. Provide a Competent Person, as defined in the OSHA Standards, to make frequent inspections of the trenching operations and the Trench Safety System in full conformance with the OSHA Standards.

B. If evidence of a possible cave-in or landslide is apparent, all work in the trench shall immediately cease and not be resumed until all necessary precautions have been taken to safeguard personnel entering the trench.

C. In an emergency situation, which may threaten or affect the safety or welfare of any persons or properties, the Contractor shall act at his discretion to prevent possible damage, injury or loss. Any additional compensation or time extension claimed for such actions shall be considered in view of the cause of the emergency and in accordance with the General Conditions.

CIP11.06 MEASUREMENT AND PAYMENT

A. Payment for the Trench Safety Plan shall be on a Lump Sum price basis, the Lump Sum price being as given in the Bid Proposal.

B. Payment for the Trench Safety Plan Implementation shall be on a unit price basis, the unit price being as given in the Bid Proposal, and the unit of measure being linear feet of trench and/or square foot of bore pit or structure, without regard to whether specific trench safety precautions are required or used for the trench reach being measured.

END OF SECTION

SECTION CIP12 – TESTING OF PIPELINES AND MANHOLES

CIP12.01 SCOPE OF WORK

A. This specification covers the requirements to perform ex-filtration testing and deflection testing of gravity pipelines and to perform pressure and leakage testing of pressure pipelines.

CIP12.02 SUBMITTALS

A. Within 30 days after the Notice to Proceed, the Contractor shall submit to the Engineer or the City for approval, technical product literature including a description of the deflection test procedure for flexible pipe greater than 27-inches in diameter, video inspection of gravity wastewater lines, and all other pertinent data to illustrate conformance to the specification found within.

CIP12.03 GENERAL

A. The entire length of the installed gravity line and the force main shall be field tested for water tightness. Gravity wastewater lines shall be video taped by camera.

B. Hydrostatic pressure and leakage tests shall be made on all pressure pipelines carrying wastewater or water.

C. All labor and equipment, including, but not limited to test pump with regulated by-pass meters and gauges required for conducting pipeline tests, shall be furnished by the Contractor. The Contractor shall furnish equipment and necessary piping as required to transport water used in testing from source to test location.

D. Time and sequence of testing shall be scheduled by the Contractor, subject to observation and approval by the City. The Contractor shall provide adequate labor, tools and equipment to operate valves and to locate and repair any leaks discovered during the initial filling of the pipeline prior to actual testing or during the course of the tests.

CIP12.04 CLEANING

A. At the conclusion of the work, thoroughly clean all pipelines by flushing with water or other means to remove all dirt, stones, pieces of wood, or other material which may have entered the pipes during the construction period. Debris cleaned from the lines shall be removed from the low end of the pipeline. If after this cleaning, obstructions remain, they shall be removed. After the pipelines are cleaned and if the groundwater level is above the pipe or following a heavy rain, the Engineer will examine the pipes for leaks. If any defective pipes or joints are discovered, they shall be repaired, and/or replaced by the Contractor at his expense.

CIP12.05 TEST PROCEDURES FOR GRAVITY PIPELINES, FORCE MAINS AND MANHOLES

A. Scope: After sewers and manholes have been installed and backfilled, subject newly laid gravity lines and manholes to a leakage test. Contractor to furnish all labor, materials, tools and equipment to test lines. Take such precautions as required to prevent damage to lines and appurtenances being tested. Repair any damage resulting from test at Contractor's expense. Conduct test in presence of Engineer or designated City Representative.

B. Test Procedures for Leakage Test of Gravity Sewer: Contractor, at his option, may test lines by hydrostatic or low pressure air test as specified below. However, the Engineer may direct a specific test be performed in specified areas of the Project.

C. Infiltration or Exfiltration Test (for Gravity Sewer)

1. Preparation: Seal ends of line section being tested with water tight plugs, equipped with pipe riser inserted and braced in the inlet of the manholes. Fill section with water 24-hours prior to start of test. Fill slowly from downstream manhole in test section so that no air is trapped in the line. Leave outlets of stacks and service lines exposed and unplugged until after exfiltration test has been made. Outlets terminating below level of test water surface to be temporarily extended upward by installing additional lengths of pipe. After completion of satisfactory test, remove lengths of pipe added for test.

2. Duration of Test: Test for 24-hours. Minimum head of either two (2) feet measured above the crown, inside pipe at upper end of section or four (4) feet measured above trench water table, whichever is higher, so that a net positive of two (2) feet TCEQ is used for testing.

3. Allowable Leakage: Allowable leakage or exfiltration in any individual section under construction shall not exceed 10 gallons per inch of inside diameter per mile of pipe per 24 hours.

D. Low Pressure Air Test

1. Preparation: Clean pipe to be tested by propelling snug fitting inflated rubber ball through the pipe with water or by use of water jet cleaning equipment. After manhole to manhole reach of pipe has been backfilled and cleaned, pneumatic plugs shall be placed in the line at each manhole and inflated to 25 psig. Add air slowly to the section under test until the internal pressure of 4.0 psig is obtained. Allow at least two (2) minutes for air temperature to stabilize, adding only the amount of air required to maintain pressure.

2. Duration of Test and Allowable Leakage

Decrease pressure to 3.5 psig and start stopwatch. Determine the time in seconds that is required for the internal air pressure to reach 2.5 psig. Minimum permissible pressure holding times are indicated in seconds and shall be computed by the following equation:

$T = (0.085 x D x K)/Q$

T = time for pressure to drop 1.0 pound per square inch gauge in seconds
K = 0.000419xDxL, but not less than 1.0
D = average inside diameter in inches
L = length of line of same pipe size being tested, in feet
Q = rate of loss assume 0.0015 cubic feet per minute per square foot internal surface shall be used

Since K value of less than 1.0 shall not be used, there are minimum times for each pipe diameter as outlined below:

Pipe Diameter	Minimum Time	Length for Minimum Time	Time for Longer Length
(inches)	(seconds)	(feet)	(seconds)
6	340	398	0.855(L)
8	454	298	1.520(L)
10	567	239	2.374(L)
12	680	199	3.419(L)
15	850	159	5.342(L)
18	1020	133	7.693(L)
21	1190	114	10.471(L)
24	1360	100	13.676(L)

Pipe Diameter	Minimum Time	Length for Minimum Time	Time for Longer Length
27	1530	88	17.309(L)
30	1700	80	21.369(L)
33	1870	72	25.856(L)
36	2040	66	30.771(L)

The test may be stopped if no pressure loss has occurred during the first 25% of the calculated testing time. If any pressure loss or leakage has occurred during the first 25% of the testing period, then the test shall continue for the entire test duration as outlined above or until failure. Lines with a 27-inch average inside diameter and larger may be air tested at each joint. If the joint test is used, a visual inspection of the joint shall be performed immediately after testing. The pipe is to be pressurized to 3.5 psi greater than the pressure exerted by groundwater above the pipe. Once the pressure has stabilized, the minimum time allowable for the pressure to drop from 3.5 psi gauge to 2.5 psi gauge shall be 10 seconds.

E. Test Procedures for Hydrostatic Test for Manholes

1. Manholes shall be tested for leakage separately and independently of the wastewater lines by hydrostatic exfiltration testing, or other methods acceptable to the City. If a manhole fails a leakage test, the manhole must be made water tight and retested. The maximum leakage for hydrostatic testing shall be 0.025 gallon per vertical foot per hour. Alternative test methods must ensure compliance with the above allowable leakage. Hydrostatic exfiltration testing shall be performed as follows: all wastewater lines coming into the manhole shall be sealed with an internal pipe plug, then the manhole shall be filled with water and maintained full for at least one (1) hour. For concrete manholes a wetting period of 24-hours may be used prior to testing in order to allow saturation of the concrete.

F. Test Procedures for Vacuum Testing Manholes

1 In lieu of the hydrostatic exfiltration test, manholes may be tested by vacuum. Manholes tested by vacuum shall be performed by the Contractor in compliance with these specifications.

2. Manholes shall be tested after installation of all connections (existing and/or proposed) in place. All lift holes shall be plugged with an approved non-shrink grout and all drop connections and gas sealing connections shall be installed prior to testing. The lines entering the manhole shall be temporarily plugged with the plugs braced to prevent them from being drawn into the manhole. The plugs shall be installed in the lines beyond the drop-connections, gas sealing connections, etc. The test head shall be placed inside the frame at the top of the manhole and inflated in accordance with the manufacturer's recommendations. A vacuum of 10-inches of mercury shall be drawn, and the vacuum pump shall be turned off. With the valve closed, the level of vacuum shall be read after the required test time as shown in the following table. If the drop in the level is less than one (1) inch of mercury (final vacuum of nine (9) inches of mercury), the manhole will have passed the vacuum test. The required test time shall be 120-seconds.

3. Manholes which have a final vacuum of nine (9) inches of mercury after the time indicated will be accepted. Any manhole which fails the vacuum test as described above shall be repaired with an approved non-shrink grout or other material acceptable to the Engineer and the City based on the material from which the manhole is constructed. The manhole shall be retested as described above until a successful test is made.

G. Exfiltration Test

1. Preparation: Seal ends of manhole being tested with watertight plugs. Fill manhole 24-hours prior to start of test. Manholes to be filled to top of manhole cone section.

2. Duration of Test: The test shall be performed for a 24-hour duration.

3. Allowable Leakage: No leakage is allowed. The water elevation shall be the same at beginning and end of test period.

H. Deflection Testing

1. Deflection tests shall be performed on all flexible pipes. For pipes with inside diameters less than 27-inches, a rigid mandrel shall be used to measure deflection. For pipelines with an inside diameter of 27-inches and greater, the Contractor shall submit to the Engineer the proposed method, with which shall provide a precision of ± two tenths of one percent (0.2%) deflection, for review and approval by the Texas Commission on Environmental Quality. The test shall be conducted after final backfill has been in place at least 30 days in the presence of a representative of the City's Utilities Department. No pipe shall exceed a deflection of five percent (5%). If a pipe should fail to pass the deflection test, the problem shall be corrected and a second test shall be conducted after the final backfill has been in place an additional 30 days. Test shall be performed without mechanical pulling devices.

2. Mandrel Sizing: The rigid mandrel shall have an outside diameter (O.D.) equal to 95% of the inside diameter (I.D.) of the pipe. The inside diameter of the pipe, for the purpose of determining the outside diameter of the mandrel, shall be the average outside diameter of the pipe minus two minimum wall thickness for O.D. controlled pipe and the average inside diameter for the I.D. Controlled pipe, all dimensions shall be per appropriate standard. Statistical or other "tolerance packages" shall not be considered in mandrel sizing.

3. Mandrel Design: The rigid mandrel shall be constructed of a metal or rigid plastic material that can withstand 200 psi without being deformed. The mandrel shall have nine or more "runners" or "legs" as long as the total number of legs is an odd number. The barrel section of the mandrel shall have a length of at least 75% of the inside diameter of the pipe. A proving ring shall be provided and used for each size mandrel in use.

4. Method Options: Adjustable or flexible mandrels are prohibited. A television inspection is not a substitute for the deflection test. A deflectometer may be approved provided the Contractor notifies the Engineer in a timely manner and submits adequate information for the Engineer to submit to the Texas Commission on Environmental Quality for review and approval. Mandrels with removable legs or runners may also be approved provided the Contractor notifies the Engineer in a timely manner and submits adequate information for the Engineer to submit to the Texas Commission on Environmental Quality for review and approval.

I. Repairs of Lines: Remove and replace or make approved corrective repairs to any section of line or manhole which has leakage that exceeds above amounts. Repair any individual leaks that may appear whether or not overall section meets leakage requirements. Individual leaks will ordinarily be revealed by looking through sewer with a light while groundwater level is over sewer, during water tamping operations or immediately after water leakage is emptied from sewer.

J. Retest: Sewers and/or manholes failing to meet requirements of leakage test will, after repair by Contractor, be tested again for leakage. No sewer or manhole will be accepted until leakage is less than allowable amount.

K. Video Inspection

1. The use of a television camera for inspection prior to placing the sewer in service will be required. Video inspection is at the cost of the Contractor, and copies of the DVD will be presented to the City prior to final acceptance. One (1) copy of the DVD shall be submitted to the City.

2. Post construction video of the gravity wastewater lines will be evaluated on a case-by-case basis for acceptance. Preparation for video taping of wastewater line shall be as follows:

   a. Flush and clean the gravity wastewater line prior to video taping.

   b. The videotape shall display the station, in accordance with the Plans and Standards, and counter on the screen. Manhole numbers and stations shall correspond to the contract documents.

   c. If debris is evident in the line during the video, the line will be flushed and cleaned to allow a clean video.

   d. All manholes will be identified at the beginning and end of the video corresponding to contract documents with upstream and downstream ends identified.

   e. Additional video inspections shall be performed prior to completion of one-year warranty period and submitted on DVD.

L. Force Main

1. Force Main shall be pressure tested one and one-half (1 1/2) times the maximum output of the pumps. The allowable hydrostaic leakage rate shall be based on CIP 12.06 Table 6A.

CIP12.06 TEST PROCEDURES FOR PRESSURE PIPELINES

A. General

1. After the pipe has been laid and backfilled and the backfill has been otherwise consolidated, all newly laid pipe, or any valved section thereof, shall be subjected to the hydrostatic pressure specified below for that particular type of pipe. The duration of the hydrostatic test shall be at least two (2) hours. Unless otherwise specified or noted on the Plans. All meters, fixtures, devices or appliances which are connected to the pipeline system and which might be damaged if subjected to the specified test pressure shall be disconnected and the ends of the branch lines plugged or capped during the testing procedures.

2. Each valved (capped or plugged) section of pipe shall be filled slowly with water and all air shall be expelled. If permanent air vents are not located at all high points, the Contractor shall install, at his own expense, corporation or blow-off cocks at such points so that air can be expelled as filling takes place. After verification that all air has been expelled, the cocks shall be closed and the pipe kept filled until tested. All exposed pipe, fittings, valves, hydrants and joints shall be examined while under test pressure and all visible leaks shall be stopped. Any cracked or defective pipe, fittings, valves or hydrants discovered during testing shall be removed and replaced by the Contractor. Replacement shall be with sound material and the test shall be repeated until satisfactory to the City.

B. Special Requirements: Where any section of pipeline is provided with concrete reaction blocking, the hydrostatic pressure shall not be made until at least five (5) days have elapsed after installation of the blocking. However, if high-early-strength cement is used in the concrete, two (2) days shall have elapsed prior to testing.

C. Leakage Test: A Leakage Test will be conducted on each valved section over the entire Project. The leakage test shall be at 150 psi for at least four (4) hours. Fire lines shall be tested at 200 psi for two (2)

hours with 0 loss.

D. Allowable Leakage

1. The allowable hydrostatic leakage rate shall be based on the following formula:

Fire lines 0 loss
L= SD √P133,200
L = testing allowance in gallons per hour
S = length of pipe tested in feet
D = nominal diameter of the pipe in inches
P = average test pressure during the hydrostatic test in pounds per square inch (gauge)

Table 6A
Hydrostatic testing allowance per 1,000 ft of pipeline* - *gph*†

Avg. Test Pressure *psi*	Nominal Pipe Diameter – in.																	
	3	4	6	8	10	12	14	16	18	20	24	30	36	42	48	54	60	64
450	.48	.64	.95	1.27	1.59	1.91	2.23	2.55	2.87	3.18	3.82	4.78	5.73	6.69	7.64	8.60	9.56	10.19
400	.45	.60	.90	1.20	1.50	1.80	2.10	2.40	2.70	3.00	3.60	4.50	5.41	6.31	7.21	8.11	9.01	9.61
350	.42	.56	.84	1.12	1.40	1.69	1.97	2.25	2.53	2.81	3.37	4.21	5.06	5.90	6.74	7.58	8.43	8.99
300	.39	.52	.78	1.04	1.30	1.56	1.82	2.08	2.34	2.60	3.12	3.90	4.68	5.46	6.24	7.02	7.80	8.32
275	.37	.50	.75	1.00	1.24	1.49	1.74	1.99	2.24	2.49	2.99	3.73	4.48	5.23	5.98	6.72	7.47	7.97
250	.36	.47	.71	.95	1.19	1.42	1.66	1.90	2.14	2.37	2.85	3.56	4.27	4.99	5.70	6.41	7.12	7.60
225	.34	.45	.68	.90	1.13	1.35	1.58	1.80	2.03	2.25	2.70	3.38	4.05	4.73	5.41	6.03	6.76	7.21
200	.32	.43	.64	.85	1.06	1.28	1.48	1.70	1.91	2.12	2.55	3.19	3.82	4.46	5.09	5.73	6.37	6.80
175	.30	.40	.59	.80	.99	1.19	1.39	1.59	1.79	1.98	2.38	2.98	3.58	4.17	4.77	5.36	5.96	6.36
150	.28	.37	.55	.74	.92	1.10	1.29	1.47	1.66	1.84	2.21	2.76	3.31	3.86	4.41	4.97	5.52	5.88
125	.25	.34	.50	.67	.84	1.01	1.18	1.34	1.51	1.68	2.01	2.52	3.02	3.53	4.03	4.53	5.04	5.37
100	.23	.30	.45	.60	.75	.90	1.05	1.20	1.35	1.50	1.80	2.25	2.70	3.15	3.60	4.05	4.50	4.80

* If the pipeline under test contains sections of various diameters, the testing allowance will be the sum of the testing allowance for each size.
† Calculated on the basis of Eq. 1.

a. These formulas are based on a testing allowance of 11.65 gpd/mi/in. (1.079 L/d/km/mm) of nominal diameter at a pressure of 150 psi (1,034 kPa).

b. 5.2.1.6.1 Testing allowance at various pressures is shown in Tables 6A and 6B.

c. 5.2.1.6.2 When testing against closed metal-seated valves, an additional testing allowance per closed valve of 0.0078 gal/h/in. (1.2 mL/h/mm) of nominal valve size shall be allowed.

d. 5.2.1.6.3 When hydrants are in the test section, the test shall be made against the main valve in the hydrant.

e. 5.2.1.7 Acceptance of installation. Acceptance shall be determined on the basis of testing allowance. If any test of laid pipe discloses a testing allowance grater than that specified in Sec. 5.2.1.6, repairs or replacements shall be accomplished inaccordance with the specifications.

f. 5.2.1.7.1 All visible leaks are to be repaired regardless of the allowance used for

testing.

2. If such testing discloses leakage in excess of this specified allowable, the Contractor, at his expense, shall locate and correct all defects in the pipeline until the leakage is within the specified allowance. All known leaks, irregardless of this test, shall be repaired.

E. Pressure Test: After satisfactorily completing the leakage test, each valved section over the entire project, shall be tested at 200 psi for a sufficient period (approximately 10 min) to discover all leaking or defective materials and/or workmanship.

F. Disinfecting Water Mains: The Contractor shall disinfect all water mains before the new facilities are placed into service. Disinfection must be performed in accordance with AWWA C651, latest revision and water samples must be submitted to a laboratory approved by the Texas Department of Health. Sample must be collected by the Contractor or his representative in the presence of the City or his representative. The Contractor shall be responsible for delivering the samples to an approved laboratory for testing. Sample results must indicate the facility is free of microbiological contamination before it is placed into service. It shall be the Contractor's responsibility to obtain a current copy of AWWA C651 to determine the correct forms of chlorine for disinfection, the basic disinfection procedure, preventive and corrective measures during construction, methods of chlorination, final flushing procedures, procedures for bacteriological tests, procedures for redisinfection and disinfection procedures when cutting into existing mains. The Contractor, at its expense, will supply the concentrated chlorine disinfecting material, the City's personnel will supervise and direct the overall sterilization procedure. The Contractor, at his own expense, shall provide all other equipment, supplies and necessary labor to perform the sterilization under general supervision by the City.

G. General

1. All valves shall be arranged to prevent the strong disinfecting dosage from flowing back into the existing water supply piping. The new pipeline shall then be completely filled with disinfecting solution by feeding the concentrated chlorine and approved water from the existing system uniformly into the new piping in such proportions that every part of the line has a minimum concentration of chlorine as prescribed in AWWA C651.

2. Unless otherwise identified, all quantities called for herein refer to measurements by the testing procedures in the current edition of "Standard Methods of Examination of Water and Wastewater". The chlorine concentration of each step in the sterilization procedure shall be verified by chlorine residual determinations. This disinfecting solution shall be retained in the piping for at least twenty-four (24) hours, and all valves, hydrants, etc., shall be operated to disinfect all their parts. After this retention period, the water shall contain no less than the chlorine residual prescribed in AWWA C651 throughout the treated section of the pipeline.

3. This heavily chlorinated water shall then be carefully flushed from the line until the chlorine concentration is not higher than the residual generally prevailing in the existing distribution system, or approximately 1.0 parts per million. Proper planning and appropriate preparations to handle, dilute and dispose of this strong chlorine solution without causing injury or damage to the public, the water system, the environment must be approved by the City before flushing of the line may begin, and the flushing shall be witnessed by an authorized representative of the City.

H. Bacteriological Testing

1. After final flushing of the strong disinfecting solution, water samples from the line shall be tested for bacteriological quality, at the Contractor's expense, and must be found free of coliform organisms before the pipeline may be placed in service. One (1) test sample shall be drawn from the end of the main and additional samples collected at intervals of not more than one-thousand (1,000) feet along the pipeline. A minimum of three (3) samples must be collected.

2. The Contractor, at his own expense, shall install sufficient sampling taps at proper locations along the pipeline. Each sampling tap shall consist of a standard corporation cock installed in

the line and extended with a copper tubing gooseneck assembly. After samples have been collected, the gooseneck assembly shall be removed and retained for future use.

3. Samples for bacteriological analysis shall be collected only from suitable taps, in sterile bottles. Collection of the test samples shall be made in the presence of City personnel. If the initial disinfection fails to produce acceptable sample tests, the disinfection procedure shall be repeated (without extra compensation) until satisfactory test results have been obtained, before the piping may be placed in service.

CIP12.07 FINAL ACCEPTANCE

A. No pipe installation will be accepted until all known leaks have been repaired whether or not leakage is within allowable limits. Locating and repairing of leaks shall be performed by the Contractor at no additional cost to the City.

B. The City will certify that all required pressure and leakage tests have been successfully completed before the pipeline is accepted.

CIP12.08 PAYMENT

A. No separate payment will be made for work completed in accordance with this specification, and the cost thereof will be included in the appropriate items of the Proposal and Bid Schedule.

END OF SECTION

TECHNICAL SPECIFICATIONS

SECTION CIP13 – SUMMARY OF TESTING (MISCELLANEOUS)

CIP13.01 SCOPE OF WORK

A. This specification covers the requirements to perform testing of various work items for this Project.

CIP13.02 SUBMITTALS

A. Within 30 days after the Notice to Proceed, the Contractor shall submit to the Engineer or the City for approval, technical product literature and all other pertinent data to illustrate conformance to the specification found within.

CIP13.03 TESTING FOR ROADS

Testing for roads shall be in accordance with Table 13-1.

Table 13-1

Item	Test Method	Passing Criteria	Comments
Hot Mix Asphaltic Concrete (HMAC)	Tex-200-F	See SD1.06 A	Sieve Analysis of Fine and Coarse Aggregate
	Tex-207-F	94.5%-97.5%Lab Density; 91.0%-96.0%In-PlaceField Density	Determining Density of Compacted Bituminous Mixtures
	Tex-210-F	See SD 1.06 B	Determining Asphalt Content of Bituminous Mixtures by Extraction
	Tex-227-F		Max. Specific Gravity of Bituminous Mixtures
	Tex-208-F	Max 35	Stability
Trench Backfill	Applicable Tex Testing Method	See Section G4.05	Minimum of one test every 250 linear feet of trench length for each lift.
Embankment	Tex-114-E		Test every 2,000 SY of roadbed surface
Flexible Base	Tex-107-E, Part II Tex-411-A Tex-110-E	2% shrinkage	Bar Linear Shrinkage
			Magnesium Soundness
			Sieve Analysis
	Tex-113-E	100% Density	Moisture Density
	Tex-115-E		Roadway Density
	Tex-116-E	40 Max.	Wet Ball Mill
	Tex-117-E	45 psi @ 0 psi lateral & 175 psi @ 15 psi lateral Max. increase ≤ 20	Triaxial Test (Part I or II)
	Tex-460-A	Plasticity Index ≤ 10	Particle Count (Part I)
	Tex-106-E	Liquid Limit ≤35	Plasticity Index
	Tex-104-E	±2% Optimum	Liquid Limit
	Tex-103-E		Moisture Content

Table 13-1, cont.

Item	Test Method	Passing Criteria	Comments
Striping	Tex-828-B Tex-854-B	10 or more stripes visible (day) 6 or more stripes visible (night) 0.060-inches minimum thickness for edgeline markings 0.090-inches minimum thickness for stop bars, legends, symbols, gore and centerline/no passing barrier line markings 0.180-inches maximum thickness for all markings	Glass Beads: If criteria is not met, check Tex-828-B for scheduling replacement of striping. The average of the readings across each sample must be equal to or above the specified minimum thickness. No reading should be more than 10-mils below the specified minimum thickness.

CIP13.04 TESTING FOR WATER/WASTEWATER

Testing for water/wastewater shall be in accordance with Table 13-2.

Table 13-2

Item	Test Method	Passing Criteria	Comments
Valves, Hydrants and Appurtenances	Manufacturer's Recommendations	Manufacturer's Recommendations	Functional field test of each valve, including actuators and valve control equipment.
Water and Wastewater Lines			As described in Section CIP 12: Testing of Pipelines

CIP13.05 TESTING FOR CONCRETE

Testing for concrete shall be in accordance with Table 13-3.

Table 13-3

Item	Test Method	Passing Criteria	Comments
Asphalt Board	Tex-524-C	Deflection from horizontal <1:3$^{1}/_{,}$	
Concrete Slump			See Table 13-4 for Slump
Coarse Aggregate	Tex-413-A Tex-410-A Tex-411-A	0.25% by weight clay lumps 1.00% by weight shale 5.00% by weight laminated and/or friable particles 40% wear 12% loss Sodium Sulfate 18% loss Magnesium Sulfate	See Table 13-5 for Gradation Soundness Test

Table 13-3, cont.

Fine Aggregate	Tex-612-J Tex-408-A	60% by weight acid insoluble residue subject to direct traffic. Color shall not be darker than Organic Color No. 3 (Gardner No. 11)	 Color Test

	Tex-401-F Tex-203-F Tex-402-A	Not less than 80 Between 2.3 & 3.1 for Non-Class K Between 2.6 & 2.8 for Class K	See Table 13-6 for Gradation Sand Equivalent Fineness Modulus
Membrane Curing	Tex-219-F	2% loss for 24-hour test 4% loss for 72-hour test	Water Retention Test

Table 13-4

Concrete Designation	**Slump**	**Maximum Slump**
1. All drill shaft	6	7
2. Uncased drill shafts, thin walled sections (<9") and pre-stressed concrete members	4	5
3. Slabs, caps, columns, piers, wall sections over 9", etc.	3	4
4. Underwater or seal concrete	6	7
5. Riprap, curb, gutter and other miscellaneous concrete.	As specified by City.	

Table 13-5

Aggregate Grade No.	**Nominal Size (in)**	**Amount Retained (%)**								
		$2^1/_2$ in	**2 in**	**$1^1/_2$ in**	**1 in**	**¾ in**	**½ in**	**$^3/_8$ in**	**No 4**	**No 8**
1	2	0	0-20	15-50		60-80			95-100	
2 (467)*	$1^1/_2$			0-5		30-65		70-90	95-100	
3	$1^1/_2$			0-5		10-40	40-75		95-100	
4 (57)*	1				0-5		40-75		90-100	95-100
5 (67)*	¼					0-10		45-80	90-100	95-100
6 (7)*	½							30-60	85-100	95-100
7	$^3/_8$							5-30	75-100	
8	$^3/_8$							0-5	35-80	90-100

Table 13-6

Aggregate Grade No.	**Amount Retained (%)**							
	$^3/_8$ in	**No 4**	**No 8**	**No 16**	**No 30**	**No 50**	**No 100**	**No 200**
1	0	0-5	0-20	15-50	35-75	65-90	90-100	97-100

CIP13.06 PAYMENT

A. No separate payment will be made for work completed in accordance with this specification, and the cost thereof will be included in the appropriate items of the Proposal and Bid Schedule.

END OF SECTION

THIS PAGE INTENTIONALLY LEFT BLANK.

TECHNICAL SPECIFICATIONS

SECTION CIP14 – PROJECT CLOSEOUT

CIP14.01 SCOPE OF WORK

A. This specification covers the administrative and procedural requirements for Project closeout, including but not limited to:

1. Closeout procedures.
2. Final cleaning.
3. Adjusting.
4. Project record documents.
5. Spare parts and maintenance materials.

CIP14.02 RECORD DOCUMENTS

A. Maintain on site, one (1) set of the following documents; actual revisions to the Work shall be recorded in these documents:

1. Contract Drawings.
2. Specifications.
3. Addenda.
4. Change Orders and other Modifications to the Contract.
5. Reviewed shop drawings, product data, and samples.

B. Store Record Documents separate from documents used for construction.

C. Record information concurrent with construction progress.

D. Specifications: Legibly mark and record at each Product section description of actual Products installed, including the following:

1. Manufacturer's name and product model and number.
2. Product substitutions or alternates utilized.
3. Changes made by Addenda and Modifications.

E. Contract Drawings and Shop Drawings: Legibly mark each item to record actual construction including:

1. Measured depths of foundations in relation to finish floor datum.
2. Measured horizontal and vertical locations of underground utilities and appurtenances, referenced to permanent surface improvements.
3. Measured locations of internal utilities and appurtenances concealed in construction, referenced to visible and accessible features of the Work.
4. Field changes of dimension and detail.
5. Details not on original Contract Drawings.

F. Submit documents to City with claim for final Application or Payment. Retention monies will not be released until complete record documents have been submitted.

CIP14.03 CLOSEOUT PROCEDURES

A. Submit written certification that Contract Documents have been reviewed, Work has been inspected, and that Work is complete in accordance with Contract Documents and ready for Engineer's and/or City's inspection.

B. Provide submittals to the City that are required by governing or other authorities.

C. Submit final Application for Payment identifying total adjusted Contract Sum, previous payments, and sum remaining due.

CIP14.04 FINAL CLEANING

A. At the completion of work and immediately prior to final inspection, cleaning of the entire project shall be accomplished according to the following provisions:

1. The Contractor shall thoroughly clean, sweep, wash, and polish all work and equipment provided under the Contract, including finishes. The cleaning shall leave the structures and site in a complete and finished condition to the satisfaction of the City.

2. All Subcontractors shall similarly perform, at the same time, an equivalent thorough cleaning of all work and equipment provided under their contracts.

3. The Contractor shall remove all temporary structures and all debris, including all dirt, sand, gravel, rubbish and waste material.

4. Should the Contractor not remove rubbish or debris, or not clean the buildings and site as specified above, the City reserves the right to have the cleaning done at the expense of the Contractor.

B. Use only cleaning materials recommended by manufacturer of surface to be cleaned.

C. Use cleaning materials only on surfaces recommended by cleaning material manufacturers.

D. In preparation for substantial completion or occupancy, conduct final inspection of sight-exposed interior and exterior surfaces, and of concealed spaces.

E. Remove grease, dust, dirt, stains, labels, fingerprints, and other foreign materials from sight-exposed interior and exterior finished surfaces. Polish surfaces so designated to shine finish.

F. Repair, patch, and touch up marred surfaces to specified finish, to match adjacent surfaces.

G. Replace air-handling filters if units were operated during construction.

H. Vacuum clean all interior spaces, including inside cabinets. Broom clean paved surfaces, mow any areas planted with grass which are in excess of two (2) inches high, and rake clean other surfaces of grounds.

I. Handle materials in a controlled manner with as few handlings as possible. Do not drop or throw materials from heights.

J. Schedule cleaning operations so that dust and other contaminants resulting from cleaning process will not fall on wet, newly-painted surfaces.

CIP14.05 ADJUSTING

A. Adjust operating products and equipment to ensure smooth and unhindered operation.

CIP14.06 FINAL INSPECTION

A. After final cleaning and restoration and upon written notice from the Contractor that the work is completed, the Engineer and/or City will make a preliminary inspection, with the Contractor present. Upon completion of this preliminary inspection, the Engineer and/or City will notify the Contractor, in writing, of any particulars in which this inspection reveals that the work is defective or incomplete.

B. Upon receiving written notice from the Engineer and/or City, the Contractor shall immediately undertake the work required to remedy deficiencies and complete the work to the satisfaction of the City.

C. When the Contractor has corrected or completed the items as listed in the Engineer's/ City's written notice, he/she shall inform the City in writing, that the required work has been completed. Upon receipt of this notice, the Engineer and/or City and the Contractor, will make the final inspection of the Project.

D. Should the Engineer and/or City find all work satisfactory at the time of his inspection, the Contractor will be allowed to make application for final payment in accordance with the provisions of the Standard Form of Agreement. Should the Engineer and/or City still find deficiencies in the work, the Engineer and/or City will inform the Contractor of the deficiencies and will deny the Contractor's request for final payment until such time as the Contractor has satisfactorily completed the required work. Additional inspections of deficiencies shall be paid for by the Contractor at $200.00 per inspection.

CIP14.07 ACCESSORY ITEMS

A. The Contractor shall provide to the City, upon acceptance of the equipment, all special accessories required to place each item of equipment in full operation. These special accessory items include, but are not limited to, the specified spare parts, adequate oil and grease as required for the first lubrication of the equipment, initial fill-up of all chemical tanks and fuel tanks, light bulbs, fuses, hydrant wrenches, valve wrenches, valve keys, handwheels, and other expendable items as required for initial start-up and operation of all equipment.

CIP14.08 GUARANTEES, BONDS, AND AFFIDAVITS

A. No application for final payment will be accepted until all guarantees, bonds, certificates, licenses, and affidavits required for work or equipment as specified are satisfactorily filed with the Engineer.

CIP14.09 RELEASE OF LIENS OR CLAIMS

A. No application for final payment will be accepted until satisfactory evidence of release of liens has been submitted to the City as required by the Standard Form of Agreement.

CIP14.10 FINAL PAYMENT

A. Final payment will be made to the Contractor in accordance with Item 47- “Payment Procedures”, Standard Form of Agreement. Final payment and release of retention monies will not be made until the Contractor has submitted one (1) set of as-built plans to the City for the Project.

END OF SECTION

THIS PAGE INTENTIONALLY LEFT BLANK.

TECHNICAL SPECIFICATIONS

SECTION CIP15 – PROJECT IDENTIFICATION SIGNAGE

CIP15.01 SCOPE OF WORK

A. This specification covers the requirements for furnishing, fabricating and erecting Project Signs on Capital Improvement Projects (C.I.P.) and for project identification at other construction sites, when required on the Plans or by the City.

CIP15.02 MATERIALS

A. Sign Face: The sign face shall be manufactured on standard exterior waterproof plywood sheets or other suitable material approved by the Engineer or the City. Unless indicated otherwise on the Plans, the thickness of the plywood sheet shall be a minimum of $^{3}/_{4}$-inches.

B. Posts: Plastic post, of the size indicated on the Plans, shall be pressure treated with pentachlorophenol.

C. Paint: Exterior oil base paint shall be used and colors shall be as indicated on the Plans.

D. Signs for Capital Improvements Projects: City seals shall be provided by the City.

CIP15.03 INSTALLATION

A. The signs shall be erected at each major entrance to the project for maximum public identification and exposure. At locations where construction is confined to an adequate area defined by the City, the installed sign size shall be four-feet by eight-feet (4'x8'). At locations where roadway construction is in progress, such as a street paving or construction of a sidewalk, the sign shall be two-feet by three-feet (2'x3'). The signs shall be posted on portable wood frames or stanchions and will be located in the proximity of the work area as construction progresses. All lumber shall be painted with two (2) coats of paint as indicated on the Plans.

B. In special cases, the size of the sign may be changed to meet special requirements, but general proportions shall be maintained.

C. It shall be the responsibility of the Contractor to maintain and relocate signs, if necessary, during the progression of the project. Care shall be exercised to assure that placement of the signs does not interfere with or cause sight obstruction to vehicular and pedestrian traffic.

D. The Contractor may install, at his own expense, company signs to identify the Contractor, Developer, etc. Signs are to be securely attached to the posts at locations indicated on the Plans and shall not be larger than 18-inches by 36-inches.

CIP15.04 PAYMENT

A. No separate payment will be made for work performed in accordance with this section of the specifications, and the cost thereof shall be included in the proper items of the Proposal and Bid Schedule.

END OF SECTION

THIS PAGE INTENTIONALLY LEFT BLANK.

TECHNICAL SPECIFICATIONS

SECTION CIP16 – WARRANTY

CIP16.01 SCOPE OF WORK

A. This specification covers the requirements of the Contractor's or Developer's one (1) year warranty period for all work performed on the Project.

CIP16.01 WARRANTY

A. Upon final acceptance by the City of Georgetown, the Contractor warrants for a period of one (1) year, the construction of the Project according to Plans and Specifications as they may be modified in accordance with the Contract Documents, and further warrants the proper operation of mechanical, electrical, and other devices or other equipment, if any, included in the project for a period of one (1) year. The Contractor or Developer warrants to the City that all materials and equipment furnished under this Contract shall be new unless otherwise approved by the City's Representative and that all work will be of good quality, free from faults and defects, and in conformance to these requirements, including substitutions not properly approved and authorized, may be considered defective.

B. This warranty is in addition to any rights or warranties expressed or implied by law and consumer protection claims arising from misrepresentations by the Contractor or Developer. This warranty obligation shall be covered by any performance or payment bonds tendered in compliance with the Contract Provisions.

C. If within one (1) year after the date of substantial completion of the work or designated portion thereof, or within one (1) year after acceptance by the City of the designated Project, or within such longer period of time as may be prescribed by law or by the terms of any applicable special warranty required by the Contract Documents, any of the work is found or determined to be defective, including obvious defects, or otherwise not in accordance with the Contract Documents, the Contractor or Developer shall correct it promptly.

D. If within 10 days after the City has notified the Contractor or Developer of a defect, failure, or abnormality in the work, the Contractor or Developer has not started to make the necessary repairs or adjustments, the City is hereby authorized to make the repairs or adjustments, or to order the work to be done by a third party. The cost of the work shall be paid by the Contractor or Developer. The cost of all materials, parts labor, transportation, supervision, special tools, and supplies required for the replacement or repair of parts and for correction of defects, shall be paid by the Contractor, Developer or by the surety. This guarantee shall be extended to cover all repairs and replacements furnished under the guarantee, and the period of the guarantee for each repair or replacement shall be one (1) year after the installation or completion. The one (1) year warranty shall cover all work equipment, and materials that are part of this project, whether or not a warranty is specified in the individual section prescribing that particular aspect of the work. Where more than a one (1) year warranty is specified in the individual section, that warranty shall govern.

E. After receipt of written notice from the City to begin corrective work, the Contractor or Developer shall promptly begin the corrective work, unless the City's Representative has previously given the Contractor a written acceptance of such condition. This obligation shall survive the termination of the Contract. This guarantee shall not constitute the exclusive remedy of the City, nor shall other remedies be limited to either the warranty or guarantee period.

CIP16.03 PAYMENT

A. No separate payment will be made for work performed in accordance with this section of the specifications, and the cost thereof shall be included in the proper items of the Proposal and Bid Schedule.

END OF SECTION

THIS PAGE INTENTIONALLY LEFT BLANK.

TECHNICAL SPECIFICATIONS

SECTION CIP17 – INSPECTION OF PROJECTS

CIP17.01 INSPECTION

A. All Projects, whether by a private development or the City of Georgetown, shall be inspected by the City or a designated representative of the City.

B. The time that the City of Georgetown or its designated representative will be available for inspection is from 8:00 a.m. to 12:00 p.m. and 1:00 p.m. to 5:00 p.m. on working days. Working days shall be defined as Monday through Friday (excluding all holidays observed by the City of Georgetown). All inspections shall be scheduled with the City a minimum of two (2) working days prior to the inspection.

C. If the Contractor, for his convenience and at his own expense, should desire to carry on his work at night or outside regular hours, he shall submit a written approval request to the City and he shall allow ample time for satisfactory arrangements to be made for inspecting the Work in progress. The Contractor shall pay the expenses for extra inspection required for work outside regular hours at a rate of $50.00/hour. Normal working hours for this purpose are Monday through Friday, 7:00 a.m. to 6:00 p.m. The Contractor shall light the different parts of the Project as required to comply with all applicable Federal and State regulations and with all applicable requirements of the City of Georgetown.

CIP17.02 AUTHORITY AND DUTIES OF INSPECTORS

A. Inspectors will be authorized to inspect all work done and all materials furnished. Such inspection may extend to all or to any part of the Work and to the preparation or Manufacturer of the materials to be used. Such inspection will not relieve the Contractor from any obligation to perform the Work in accordance with the requirements of the Specifications. In case of any dispute arising between the Contractor and the Inspector as to materials furnished or the manner of performing the Work, the Inspector will have authority to reject materials or suspend work until the question at issue can be referred to and decided by the City. The Inspector will not be authorized to revoke, alter, enlarge, or release any requirement of these Specifications, nor to approve or accept any portion of the Work, nor to issue instruction contrary to the Plans and Specifications. He will in no case act as foreman or perform other duties for the Contractor nor interfere with the management of the Work.

END OF SECTION

THIS PAGE INTENTIONALLY LEFT BLANK.

TECHNICAL SPECIFICATIONS

SECTION G1 – BARRICADES, SIGNS AND TRAFFIC HANDLING

G1.01 SCOPE OF WORK

A. This specification covers the requirements to provide, install, move, replace, maintain, clean and remove temporary or permanent street closure barricades, signs or other devices required to handle the traffic in conformance with the current edition of the Texas Manual of Uniform Traffic Control Devices for Streets and Highways (TMUTCD)and as indicated by the Engineer or the City.

G1.02 SUBMITTALS

A. Within 10 days after the Notice to Proceed, the Contractor shall submit to the Engineer a site-specific Traffic Control Plan. The Traffic Control Plan shall be sealed by a Professional Engineer Registered in the State of Texas as required by the Project Specifications, City, or Engineer.

G1.03 CONSTRUCTION METHODS

A. Prior to commencing the construction, suitable "Barricades, Signs and Traffic Handling" devices shall be installed to protect the workers and the public. A traffic control plan specific to the Project shall be designed and submitted to the City prior to the start of construction. If indicated by the Plans or requested by the City the plan shall be designed by a qualified traffic engineer who is a Registered Professional Engineer in the State of Texas.

B. The Contractor shall be responsible for installing all markers, signs and barricades conforming to the Texas Manual on Uniform Traffic Control Devices and/or as indicated. If, in the opinion of the Engineer, additional markers, signs or barricades are needed in the interest of safety, the Contractor will install such as are required or as directed by the Engineer.

G1.04 MAINTENANCE

A. It shall be the Contractor's responsibility to maintain, clean, move and replace if necessary, barricades, signs and traffic handling devices during the time required for construction of the Project. When no longer needed all temporary barricades, signs and traffic handling devices shall be removed and the area restored to its original condition or as directed by the Engineer.

G1.05 PAYMENT

A. Payment shall be made for the work performed in accordance with this specification and the appropriate bid items of the Proposal and Bid Schedule.

END OF SECTION

TECHNICAL SPECIFICATIONS

SECTION G2 – SITE PREPARATION

G2.01 SCOPE OF WORK

A. This specification covers the requirements for performing all clearing, grubbing and stripping of topsoil complete as shown on the Plans and as specified herein.

G2.02 SUBMITTALS

A. None required unless specifically called for in the Plans, Standards or requested by the City or the Engineer.

G2.03 CLEARING AND GRUBBING

A. Except as otherwise directed, cut, grub, remove and dispose of all trees, stumps, brush, shrubs, roots and any other objectionable material within the limits defined on the Plans.

B. All trees, stumps, brush, shrubs, roots and other objectionable material shall be cut, grubbed, removed and disposed of from areas to be occupied by buildings, structures, roads, pipelines and any other areas to be stripped. Trees and brush shall be removed to a depth at least three (3) feet below the finished grade.

C. In addition, heavy growths of weeds or other plants shall be stripped from the surface in order to provide clear access to the work site and to prevent their inclusion in stockpiled soil which is to be reused later. Trees, stumps, surface plants and all debris removed from the site shall be disposed of off-site by the Contractor at his own expense.

D. Before the start of construction, protect trees or groups of trees, designated by the Engineer to remain, from damage by all construction operations by erecting suitable barriers, or by other approved means. Clearing operations shall be conducted in a manner to prevent falling trees from damaging trees designated to remain.

E. Areas outside the limits of clearing shall be protected from damage and no equipment or materials shall be stored in these areas.

F. No stumps, trees, limbs, or brush shall be buried in any fills or embankments.

G2.04 STRIPPING

A. Strip topsoil from all areas to be occupied by buildings, structures, roadways and all areas to be excavated or filled. Avoid mixing topsoil with subsoil and stockpile topsoil in areas on the site as approved by the Engineer. Topsoil shall be free from brush, trash, large stones and other extraneous material and protected until it is placed as specified under Section G7-LOAMING, HYDROSEEDING AND PERMANENT EROSION CONTROL. Dispose of any remaining topsoil as directed by the City. All excess topsoil shall remain property of the City at its option, and Contractor shall place extra materials at a site designated by the City.

G2.05 DISPOSAL OF MATERIALS

A. All tree trunks, limbs, roots, stumps, brush, foliage, other vegetation and objectionable material shall be removed from the site and disposed of in a permitted disposal site in a manner satisfactory to the Engineer.

B. Burning of cleared and grubbed materials will not be permitted.

C. Disposal of Excavated Materials

1. Suitable excavated materials may be stockpiled to be used for backfilling. Excess excavated materials and unsuitable backfill materials shall be disposed of by the Contractor in the following manner:

a. Clays, sands and gravel in excess of project requirements shall be disposed of by the Contractor at such locations and under consideration arranged by the Contractor at his expense.

b. Limestone and other rock excavation shall be disposed of by the Contractor at such locations and under consideration arranged by the Contractor at his expense.

2. The classification of clays, sands, gravel, limestone and rock shall be made in accordance with the Unified Soil Classification System, U.S. Army Corps of Engineers, T.M. 3-357.

3. Desirable topsoil, sod, or area fill shall be carefully removed and piled separately adjacent to the work when required. Excavated materials shall be handled at all times in such a manner as to cause a minimum of inconvenience to the City's operations, and to permit safe and convenient access to private and public property adjacent to the work

G2.06 UNAUTHORIZED EXCAVATION

A. Whenever the excavation is carried beyond or below the lines and grades as shown on the plans, except as specified above, all such excavated space shall be refilled with such material and in such a manner, as may be directed by the City, so as to insure the stability of the affected structure. Beneath all structures, space excavated without authority shall be refilled by the Contractor, at his own expense, with Class "C" concrete, crushed stone or selected fill materials, as directed by the City.

G2.07 PAYMENT

A. Payment will be made for work performed in accordance with this specification by the unit quantity for the item for right-of-way preparation in the Proposal and Bid Schedule.

END OF SECTION

TECHNICAL SPECIFICATIONS

SECTION G3 – SITE CLEARING

G3.01 SCOPE OF WORK

A. This specification covers the requirements for site clearing operations for this Project.

G3.02 SUBMITTALS

A. None required unless specifically called for in the Plans, Standards, or requested by the City or the Engineer.

G3.03 TRAFFIC

A. Conduct site-clearing operations to ensure minimum interference with roads, streets, walks and other adjacent occupied or used facilities. Do not close or obstruct streets, walks, or other occupied or used facilities without permission from authorities having jurisdiction.

G3.04 PROTECTION

A. Provide temporary fences, barricades, coverings, or other protection to preserve existing items indicated to remain and to prevent injury or damage to persons or property. Provide protection for adjacent properties as required.

B. Restore damaged work to condition existing prior to start of work.

C. Protect existing trees and vegetation that are indicated to remain from physical damage. Do not store materials or equipment within tree drip line. Replace damaged trees that cannot be restored to full growth, as determined by arborist, unless otherwise acceptable to the Engineer or the City.

D. Protect existing property and easement corners and pins. In the event that property or easement corners or pins are moved disturbed or destroyed the Contractor shall replace them at his own expense. They shall be replaced by a Registered Professional Land Surveyor registered in the State of Texas.

G3.05 EXISTING SERVICES

A. Locations indicated are approximate; determine exact location before commencing work. Coordinate with local utility service requirements and comply with their instructions.

G3.06 SITE CLEARING

A. Remove trees, shrubs, grass and other vegetation, improvements, or obstructions as indicated or that interfere with new construction. Removal includes digging out stumps and roots, together with subsequent off-site disposal.

B. Strip and stockpile topsoil that will be reused in the Work.

C. Remove existing improvements, both above-grade and below-grade, to extent indicated or as otherwise required to permit new construction.

G3.07 SALVAGEABLE ITEMS

A. Carefully remove items indicated to be salvaged and store on the City's premises where indicated or directed.

G3.08 AIR POLLUTION

A. Control air pollution caused by dust and dirt; comply with governing regulations.

G3.09 REGRADING

A. Fill depressions and voids resulting from site-clearing operations. Using satisfactory soil materials, place in maximum six (6) inch deep horizontal layers and compact each layer to density of surrounding original ground.

B. Grade ground surface to conform to required contours and to provide surface drainage.

G3.10 DISPOSAL OF MATERIAL

A. Dispose of waste materials including trash, debris and excess topsoil. No waste material shall remain on the City's property.

B. Burning waste materials on site is not permitted.

G3.11 PAYMENT

A. No separate payment will be made for work performed in accordance with this specification, and the cost thereof shall be included in the proper items of the Proposal and Bid Schedule.

END OF SECTION

SECTION G4 - PIPE EXCAVATION, TRENCHING, EMBEDMENT, ENCASEMENT AND BACKFILLING

G4.01 SCOPE OF WORK

A. This specification covers the requirements for furnishing all labor, equipment and material and performing all work necessary, in connection with excavation, trenching, embedment, encasement, and backfilling, for the installation of water and wastewater lines in this Project.

G4.02 SUBMITTALS

A. Within 30 days after the Notice to Proceed, the Contractor shall submit to the Engineer or the City for approval, technical product literature including a Trench Safety Plan (which shall be sealed by a Professional Engineer registered in the State of Texas, if required) embedment material (source, gradation and type), backfill material (source, gradation and type), encasement material (if required), equipment and all other pertinent data to illustrate conformance to the specification found within.

G4.03 EXCAVATION

A. General

1. Excavation shall include the removal of any trees, stumps, brush, debris, or other obstacles that may obstruct the line of work, and the excavation and removal of all earth, rock or other materials to the extent necessary to install the pipe and appurtenances in conformance with the line and grades shown in the Plans, or as specified.

B. Maximum and Minimum Width of Trenches

1. The sides of all trenches shall be cut as nearly vertical as possible. Unless otherwise specified on the Plans, the minimum width of trench in which the pipe may be installed shall not be less than 12-inches plus the outside diameter of the pipe, and the maximum width shall not be more than 24-inches plus the outside diameter of the pipe, measured at an elevation in the trench which is 12-inches above the top of the pipe when it is laid to grade.

2. Wherever the prescribed maximum trench width is exceeded, the Contractor shall use the class embedment or encasement required by the Engineer to provide the load carrying capacity for the trench width as actually cut, and the additional cost incurred will be borne by the Contractor.

C. Sheeting and Shoring

1. Where required in the Contractor's Trench Safety System, or where required for other reasons in caving ground, or in wet, saturated or flowing materials, the sides of all trenches and excavations shall be adequately sheeted and braced so as to maintain the excavation free from slides or cave-ins.

2. Sheeting and shoring shall not be left in place unless its removal is impractical.

D. Dewatering Excavations

1. There shall be sufficient pumping equipment, in good working order, available at all times to remove any water that accumulates in excavations. Where the pipeline crosses natural drainage channels, the work shall be conducted in such a manner that unnecessary damage or delays in the prosecution of the work will be prevented. Provisions shall be made for the satisfactory disposal of surface water pumped so as to prevent damage to public or private property. The Contractor shall be responsible for maintaining safe working conditions and suitable construction techniques.

E. Disposal of Excavated Materials

1. Suitable excavated materials may be piled adjacent to the work to be used for backfilling. Excavated materials unsuitable for backfilling, or in excess of that required for backfilling, shall be disposed of by the Contractor. Desirable topsoil, sod, etc. shall be carefully removed and piled separately adjacent to the work when required. Excavated materials shall be handled at all times in such a manner as to cause a minimum of inconvenience to public travel. Suitable selected bedding or backfill material shall be provided at no additional cost to the City.

F. Trench Depth

1. Excavation for the pipeline shall be removed to a depth below the pipe barrel and pipe bell as shown in the Plans for the type of embedment specified, and the bottom of the trench brought to true subgrade with the embedment or encasement shown in the Plans.

G. Soft Subgrade

1. Where soft or spongy material is encountered in the excavation at subgrade level, it shall be removed to such a depth that a stable foundation is achieved by replacing the unsuitable material with tamped gravel, brought to the level of the bottom of bedding.

2. Gravel used shall be washed gravel or crushed stone and may fit any gradation of size up to three (3) inches. The particular gradation shall take into consideration the actual field conditions.

H. Excavated Materials

1. Excavated materials shall be piled adjacent to the work to be used for backfilling as required. After the trench has been refilled, topsoil shall be replaced to the extent that rock excavated from the trench will be completely covered and the area is returned to its original condition.

2. Where required on the Plans or when otherwise specified, desirable topsoil shall be piled separately in a careful manner and replaced in its original position.

3. Where a trench is required to cross a paved area, the asphalt or concrete shall be saw cut and removed for a total width that is two (2) feet greater than the trench width. The Contractor shall dispose of all excavated concrete, asphalt and subgrade material that is unsuitable for backfilling or in excess of that required for backfilling.

I. Damage to Existing Utilities

1. Where existing utilities are damaged, they shall be replaced immediately with material equal to or better than the existing material. Such work shall be at the entire expense of the Contractor.

G4.04 EMBEDMENT AND ENCASEMENT

A. General

1. Embedment shall be as required in the Plans or Standards. All embedment materials shall be free of grass, roots, vegetation, and other deleterious materials. Embedment Standards are shown on the Plans or Standards.

2. When the pipe has been checked for line and grade, the trench shall be backfilled with enough granular material or concrete on both sides to hold the pipe firmly in position. When placing granular material or concrete around the pipe, care shall be taken to fill all voids around the pipe. The pipe shall not be floated. The embedment or encasement material shall be carefully tamped to assure uniform pipe support and density.

B. Embedment Materials

1. Material for embedment shall conform to the following sieve analysis:

Sieve Size	$^{3}/_{8}$" F % Retained	½" D % Retained
½"	0	0
$^{3}/_{8}$"	0-2	5-25
4m	40-85	80-100
10m	95-100	96-100

C. Concrete Embedment and Encasement

1. Concrete embedment and encasement and cap shall have a minimum compressive strength of 2,000 pounds per square inch at 28 days.

2. Dry mix will not be permitted. The concrete cushion portion of the embedment or encasement will be mixed moist or damp to give a slump of not more than one inch. Concrete for the sides and top, if specified, shall be mixed to obtain a slump of not less than one inch or more than three (3) inches.

3. After pipe joints are completed, the voids at the joints in the embedment section shall be filled with concrete, and the embedment shall be brought up to proper grade. Where concrete is placed over or along the pipe, it shall be placed in such a manner as not to damage or injure the joints or displace the pipe. Care shall be taken in the placement of concrete to assure that a uniform pad, free of voids and of specified thickness, is constructed under the entire pipe section.

4. A cleavage line between the base concrete and the side embedment concrete will not be allowed. Backfilling shall be done in a careful manner and at such time, after concrete embedment or encasement has been placed, as not to damage the concrete in any way.

G4.05 BACKFILLING

A. General

1. Backfilling shall include the refilling and consolidating of the fill in trenches and excavations up to the surrounding ground surface or road grade at crossings. No backfill shall be placed until the Engineer, the City or his authorized Inspector has inspected the trench and pipe in place and has authorized the placing of backfill.

2. Backfilling shall be done with select material or concrete backfill as described hereafter and shown on the Plans. No material of a perishable, spongy or otherwise unsuitable nature shall be used in backfilling.

B. Select Backfill Material

1. Unless otherwise shown on the Plans, or approved by the Engineer, the select material backfill shall be Specification Section SD4 Flexible Base, Type A Grade 1.

2. If approved by the Engineer, good, sound earth may be used as select material for backfill over the pipe. Good, sound earth as defined as gravel, sandy loam or loam, free from excessive clay. Select material shall not have rocks with an average dimension larger than one inch, and no dimension greater than two (2) inches.

3. An alternative to the flexible base as select backfill will be on-site or imported select material so long as it is properly moisture-conditioned, placed and compacted.

4. It shall be the full responsibility of the Contractor to explore the project and subsurface materials to determine if the trench excavation will be suitable for use as select materials and to follow as closely as possible this Specification to insure a good, sound pipeline when completed.

C. Concrete Trench Cap

1. Where 36-inch minimum cover cannot be obtained or due to potential surface loading, the City may require a cap to be installed.

D. Concrete Backfill

1. Where shown on the Plans, concrete backfill shall consist of selected rock material or granular sand material mixed with a minimum of three sacks of cement per cubic yard. All material shall be mixed in a concrete mixer or transit mixed unless otherwise approved by the City.

E. Backfilling Operation

1. Backfilling operation outside of pavement shall be compacted to the required density without damaging the pipe or bedding. Backfill under non paved areas, two (2) feet outside of any structure or utilities and excluding lines within a floodplain, streams and watercourses shall be compacted to 90% of the maximum dry density in accordance Tex-114-E. Areas within two (2) feet of structures or existing utilities and areas within a floodplain, streams and water courses shall be compacted to 95% in accordance with Tex-114-E. Prior to any compaction, moisture shall be within +3% of the optimum moisture content.

2. All trenches under proposed or existing concrete roadways, driveways and sidewalks, paved waterways, brick roadways, asphaltic roadways with concrete base, gravel

roadways, and roadways with gravel base and asphalt surface, shall be backfilled to the required density in six (6) inch maximum lifts without damaging the pipe or bedding except the first lift over the pipe bedding will be 12 inches in depth. Swelling soils (soils with a plasticity index of 20 or more) shall be sprinkled as required to provide not less than optimum moisture nor more than 3% over the optimum moisture content to the extent necessary to provide not less than 95% nor more than 102% of the maximum dry density as determined in accordance with Tex-114-E. Non-swelling soils (soils with a plasticity index less than 20) shall be sprinkled as required and compacted to the extent necessary to provide not less than 95% of the optimum dry density with the moisture within +3% of the optimum moisture content in accordance with Tex-114-E. Jetting with water will not be permitted. Flexible base used as select backfill shall be compacted to 95% of Tex-113E at +3% of the optimum moisture content.

3. After the trench has been refilled, topsoil shall be replaced to the extent that rock excavated from the trench will be completely covered or removed and the area is returned to its original condition, except that in cultivated areas a minimum of six (6) inches of topsoil shall be replaced.

G4.06 PAYMENT

A. For all piping, there shall be no separate payment made for work performed under this Specification for excavating, trenching, embedment, and backfilling. All costs incurred shall be included in the contract price for the appropriate items in the Proposal and Bid Schedule.

B. Separate payment, if authorized by the City, will be made for crushed stone or washed gravel as described in these specifications under Section G4.02(G), SOFT SUBGRADE, at the contract unit price per cubic yard as provided in the Proposal and Bid Schedule (if applicable).

END OF SECTION

TECHNICAL SPECIFICATIONS

SECTION G5 – GRANULAR FILL MATERIALS

G5.01 SCOPE OF WORK

A. This specification covers the requirements for the use of granular fill materials for this Project.

G5.02 SUBMITTALS

A. Within 30 days after the Notice to Proceed, the Contractor shall submit to Engineer or the City for approval, technical product literature including the source of the material, gradation, type of material, and all other pertinent data to illustrate conformance to the specification found within.

G5.03 GENERAL

A. Granular fill materials are specified in this Section, but their use for bedding pipe, pavement base, are specified in detail in sections G4 – PIPE EXCAVATION, TRENCHING, EMBEDMENT, ENCASEMENT AND BACKFILLING and SD4 – FLEXIBLE BASE. The Engineer may respectively order the use of fill materials for purposes other than those specified in other Sections if, in his/her opinion, such use is advisable.

G5.04 MATERIALS

A. Common fill shall consist of mineral soil, substantially free of clay, organic material, loam, wood, trash, and other objectionable material which may be compressible, or which cannot be compacted properly. Common fill shall not contain stones larger than six (6) inches in any dimension, broken concrete, masonry, rubble, asphalt pavement, or other similar materials. It shall have physical properties, as approved by the Engineer, such that it can be readily spread and compacted.

B. Select common fill shall be as specified above for common fill except that the material shall contain no stones larger than two (2) inches in its largest dimension.

C. Crushed Stone Backfill shall consist of hard, durable, particles of proper size and gradation, free from sand, loam, clay, excess fines and deleterious materials. The size of the particles shall be uniformly graded such that the following bedding specifications are met:

Sieve Size	3/8" F % Retained	½" D % Retained	Washed Gravel % Retained
½"	0	0	0
3/8"	0-2	5-25	---
4m	40-85	80-100	---
10m	95-100	96-100	---
¾"	---	---	100

D. Crushed Stone Base shall consist of sound, durable stone, free of any foreign material, angular in shape, free from structural defects and comparatively free of chemical decay. This material shall comply with Texas Department of Transportation Item 248, Type "A", Grade 1 unless otherwise shown on the Plans or Standards. The stone shall have a maximum size of 7/8-inch.

E. Cement Stabilization Sand Backfill shall consist of a mixture of ASTM C33 fine aggregate and Type I cement. The mix shall be proportioned of two (2) sacks of cement per cubic yard.

G5.05 PAYMENT

A. No separate payment will be made for work performed in accordance with this specification, and the cost thereof shall be included in the proper items of the Proposal and Bid Schedule.

END OF SECTION

TECHNICAL SPECIFICATIONS

SECTION G6 – SEDIMENTATION AND TEMPORARY EROSION CONTROL

G6.01 SCOPE OF WORK

A. This specification covers the requirements necessary to perform all installation, maintenance, removal and area cleanup related to sedimentation control work as shown on the Plans and as specified herein.

G6.02 SUBMITTALS

A. Within 10 days after Notice to Proceed, the Contractor shall submit to the Engineer for approval, technical product literature for all commercial products to be used for sedimentation and erosion control.

G6.03 GENERAL

A. The work shall include, but not necessarily be limited to: triangular filter dike, rock berm, silt fence, curb inlet protection, stabilized construction entrance, tree protection, excelsior matting, and temporary mulching, sediment removal and disposal, device maintenance, removal of temporary devices, temporary mulching, excelsior matting installation and final cleanup. All sedimentation and erosion control shall be installed prior to the start of any construction activities.

G6.04 QUALITY ASSURANCE

A. The Contractor shall be responsible for the timely installation and maintenance of all sedimentation control devices necessary to prevent the movement of sediment from the construction site to off site areas or into the stream system via surface runoff or underground drainage systems. Measures in addition to those shown on the Plans necessary to prevent the movement of sediment off site shall be installed, maintained, removed, and cleaned up at the expense of the Contractor. No additional charges to the City will be considered.

B. Sedimentation and erosion control measures shall conform to the requirements outlined in the Texas Commission on Environmental Quality (TCEQ) Chapter 213.

G6.05 MATERIALS

A. Triangular Filter Dike

1. Triangular filter dike sections shall be either 10-feet or 20-feet in length.

2. Geotextile fabric shall extend to 12-inches upstream of triangular filter dike structure.

3. Triangular filter dike structure shall be 18-inches in length on all three (3) faces.

4. Three (3) inch to five (5) inch open graded rock shall be placed over skirt to anchor it on the upstream side.

5. Structure shall be formed by six (6) gauge six inch by six inch (6” x 6”) welded wire mesh.

6. Geotextile fabric shall be non-woven, 4.5 oz. minimum and 36-inches wide.

B. Rock Berm

1. Woven wire sheathing shall be 20-gauge with one inch openings.

2. Rock shall be three inches to five inches (3” - 5”) open graded.

C. Silt Fence

1. Steel posts shall be a minimum of four (4) feet in length, heavy weight T-Post.

2. Welded wire fabric shall be two-inch by four-inch (2” x 4”) mesh of 12-gauge by 12-gauge galvanized wire mesh.

3. Silt fence fabric shall be a 4.5 oz minimum non-woven geotextile filter fabric 36-inches wide.

4. Tie wires for securing silt fence fabric to wire mesh shall be light gauge metal clips (hog rings), or $^{1}/_{32}$-inch diameter soft aluminum wire.

5. Prefabricated commercial silt fence may be substituted for built-in-field fence. Prefabricated silt fence shall be "Envirofence" as manufactured by Mirafi Inc., Charlotte, NC or equal.

D. Curb Inlet Protection

1. 4.5 oz. minimum non-woven geotextile filter fabric shall be used.

2. Sand bags shall be used to hold the filter fabric in place.

E. Stabilized Construction Entrance

1. Stabilized construction entrance shall have a minimum width of 12-feet and a minimum length of 50-feet.

2. An eight (8) inch high diversion ridge shall be constructed 15-feet from the edge of the existing roadway.

3. Stabilized construction entrance shall be graded to drain towards the existing roadway at a two-percent (2%) slope.

4. Rock shall be four-inches to eight-inches (4” - 8”) coarse aggregate.

5. Rock shall be placed to a depth of at least eight (8) inches.

F. Tree Protection – Chain Link Fence

1. Chain link fence shall be five (5) feet in height.

2. Fence shall be installed around the driplines of the trees to be protected.

G. Tree Protection – Wood Slats

1. Where any exceptions result in a fence being closer than four (4) feet to a tree trunk, protect the trunk with strapped-on-planking two inches by four inches (2" x 4") wood slats to a height of eight (8) feet, or to the limits of lower branching in addition to the reduced fencing provided.

2. Trees most heavily impacted by construction activities should be watered deeply once a week during periods of hot, dry weather. Tree crowns should be sprayed with water periodically to reduce dust accumulation on the leaves.

3. Any trenching required for the installation of landscape irrigation shall be placed as far from existing tree trunks as possible.

4. No landscape topsoil dressing greater than four (4) inches shall be permitted within the dripline of a tree. No soil is permitted on the root flare of any tree.

5. No vehicles or equipment shall be allowed to park within the dripline of an existing tree.

H. Soil Retention Blankets

1. Soil retention blankets shall be installed in all seeded drainage swales and ditches as shown on the Plans or as directed by the Engineer. Only soil retention blankets included on TxDOT's Approved Products List will be considered acceptable for use on this Project.

2. Contractor is to include this item in their erosion controls as required by the City and by the Contractor's Stormwater Pollution Prevention Plan (SWPPP). The Blankets must meet the expected velocities in the area to prevent erosion of the soil of the post-constructed area. Contractor is to submit the proposed material prior to construction for Engineer's and City's approval.

I. Temporary Mulch

1. Temporary mulch shall be applied to areas where rough grading has been completed but final grading is not anticipated to begin within 30 days of the completion of rough grading.

G6.06 INSTALLATION

A. Triangular Filter Dike

1. Layout the filter dike following as closely as possible to the contour.

2. Clear the ground of debris, rocks, and plants that will interfere with installation.

3. Place the filter dike sections one at a time, with the skirt on the uphill side towards the direction of flow anchoring each section to the ground before the next section is placed.

4. Anchors should be placed on two (2) foot centers alternating from front to back so that there is actually only one foot in between anchors.

5. Securely fasten the skirt from one section of filter dike to the next.

6. Filter dikes must maintain continuous contact with the ground.

7. After the site is completely stabilized, the dikes and any remaining silt should be removed. Silt should be disposed of in a manner that will not contribute to additional siltation.

B. Rock Berm Installation

1. Layout the rock berm following as closely as possible to the contour.

2. Clear the ground of debris, rocks or plants that will interfere with installation.

3. Place woven wire fabric on the ground along the proposed installation with enough overlap to completely encircle the finished size of the berm.

4. Place the rock along the center of the wire to the designated height.

5. Wrap the structure with the previously placed wire mesh secure enough so that when walked across, the structure retains its shape.

6. Secure with tie wire.

7. The ends of the berm should be tied into existing upslope grade and the berm should be buried in a trench approximately four (4) inches deep to prevent failure of the control.

8. The rock berm should be left in place until all upstream areas are stabilized and accumulated silt removed.

C. Silt Fence Installation

1. Lay out the silt fence following as closely as possible to the contour.

2. Clear the ground of debris, rocks, and plants (including grasses taller than two (2) inches) to provide a smooth flow approach surface. Excavate four-inches deep by four-inches wide (4” x 4”) trench on upstream side of face per Plans.

3. Drive the heavy duty T-post at least 12-inches into the ground and at a slight angle towards the flow.

4. Attach the two-inches by four-inches (2” x 4”) 12-gauge welded wire mesh to the T-post with $11^1/_2$-gauge galvanized T-post clips. The top of the wire shall be 24-inches above ground level. The welded wire mesh shall be overlapped six (6) inches and tied at least six (6) times with hog rings.

5. The silt fence shall be installed with a skirt a minimum of 11-inches wide placed on the uphill side of the fence inside excavated trench. The fabric to overlap the top of the wire by one inch.

6. Anchor the silt fence by backfilling with excavated dirt and rocks.

7. Geotextile splices should be a minimum of 18-inches wide attached in at least six (6) places.

D. Curb Inlet Protection Installation

1. Clear the pavement of debris, rocks, etc. to provide a smooth surface for installation.

2. Place the filter fabric over the inlet and extend to five (5) feet beyond inlet opening, upstream of inlet. Terminate fabric in street gutter with sand bags placed in gutter flowline.

3. Place sandbags on top of filter fabric around the perimeter of the protected area to secure the filter fabric.

4. Care shall be taken insure that the inlet protection will remain in place during periods of heavy runoff and that severe ponding will not occur in the street.

E. Stabilized Construction Entrance Installation

1. Clear the area of debris, rocks or plants that will interfere with installation.

2. Grade the area for the entrance to flow back on to the construction site. Runoff from the stabilized construction entrance onto a public street will not be allowed except for the first 15 feet connecting to the public street.

3. Place geotextile fabric (if required).

4. Place rock (as required).

F. Tree Protection – Chain Link Fence

1. Tree protection fences shall be installed prior to the commencement of any site preparation work (i.e., clearing, grubbing or grading).

2. Fences shall completely surround the tree, or clusters of trees; will be located at the outermost limit of the tree branches (dripline); and will be maintained throughout the construction project in order to prevent the following:

   a. Soil compaction in the root zone area resulting from vehicular traffic, or storage of equipment or materials.

   b. Root zone disturbances due to grade changes greater than six (6) inches, cut or fill, or trenching not reviewed and authorized by the City.

   c. Wounds to exposed roots, trunks or limbs by mechanical equipment.

   d. Other activities detrimental to trees such as chemical storage, cement truck cleaning and fire.

3. Exceptions to installing fences at tree driplines may be permitted in the following cases:

   a. Where permeable paving is to be installed, erect the fence at the outer limits of the permeable paving area.

   b. Where trees are close to a proposed building, erect the fence no closer than six (6) feet to building.

G. Tree Protection – Wood Slats

1. Any roots exposed by construction activity shall be pruned flush with the soil. Backfill root areas with good quality top soil as soon as possible. If exposed root areas are not backfilled within two (2) days, cover them with organic material in a manner which reduces soil temperature, and minimizes water loss due to evaporation.

2. Prior to excavation or grade cutting within tree dripline, make a clean cut between the disturbed and undisturbed root zones with a rock saw or similar equipment, to minimize damage to remaining roots.

3. Pruning to provide clearance for structures, vehicular traffic and equipment shall take place before construction starts.

H. Excelsior Matting

1. The area to be covered shall be properly prepared, fertilized and seeded with permanent vegetation before the blanket is applied.

2. When the blanket is unrolled, the netting shall be on top and the fibers in contact with the soil over the entire area.

3. The blankets shall be applied in the direction of water flow, and stapled. Blankets shall be placed a minimum of three (3) rows, of four (4) foot wide (total approximate 12-foot width) within the drainage swale/ditch and stapled together in accordance with Manufacturer's instructions.

4. Side overlaps shall be four (4) inch minimum. The staples shall be made of wire, 0.091-inch in diameter or greater, "U" shaped with legs 10-inches in length and a $1^1/_2$-inch crown. The staples shall be driven vertically into the ground, spaced approximately two (2) linear feet apart, on each side, and one row in the center alternately spaced between each size.

5. Upper and lower ends of the matting shall be buried to a depth of four (4) inches in a trench.

6. Erosion stops shall be created every 25-feet by making a fold in the fabric and carrying the fold into a silt trench across the full width of the blanket. The bottom of the fold shall be four (4) inches below the ground surface. Staple on both sides of fold.

7. Where the matting must be cut or more than one roll length is required in the swale, turn down upper end of downstream roll into a slit trench to a depth of four (4) inches. Overlap lower end of upstream roll four (4) inches past edge of downstream roll and staple.

8. To ensure full contact with soil surface, roll matting with a roller weighing 100-pounds per foot of width perpendicular to flow direction after seeding, placing matting and stapling.

9. Thoroughly inspect channel after completion. Correct any areas where matting does not present a smooth surface in full contact with the soil below.

I. Temporary Mulching

1. Straw mulch shall be applied at rate of 100 lbs/1,000 ft^2 and tackified with latex acrylic copolymer at a rate of 1 gal/1,000 ft^2 diluted in a ratio of 30 parts water to one part latex acrylic copolymer mix.

G6.07 MAINTENANCE AND INSPECTIONS

A. Inspections

1. Contractor shall make a visual inspection of all sedimentation control devices once per week and promptly after every rain event exceeding ¼-inch. If such inspection reveals that additional measures are needed to prevent movement of sediment to offsite areas or into the vent trench, Contractor shall promptly install additional devices as needed. Sediment controls in need of maintenance shall be repaired promptly.

B. Device Maintenance

1. Triangular Filter Dikes

a. Realign berms as needed to prevent gaps between the sections.

b. Accumulated silt should be removed after each rainfall event, and disposed of in a manner which shall not cause additional siltation.

2. Rock Berm

a. Remove sediment and other debris when buildup reaches six (6) inches and dispose of the accumulated silt in an approved manner.

b. Repair any loose wire sheathing.

c. Reshape as needed.

d. Replace berm when the structure ceases to function as intended due to silt accumulation among the rocks, washout, construction traffic damage, etc.

3. Silt Fences

a. Remove accumulated sediment when buildup reaches six (6) inches.

b. Replace damaged fabric, or patch with a two (2) foot minimum overlap.

c. Replace or repair any sections crushed or collapsed in the course of construction activity.

d. Make other repairs as necessary to ensure that the fence is filtering all runoff directed to the fence.

4. Curb Inlet Protection

a. Repair any damaged fabric, or patch with a two (2) foot minimum overlap.

b. Replace any damaged sandbags.

c. Remove accumulated sediment.

5. Stabilized Construction Entrance

a. Periodic top dressing with additional stone may be required as conditions demand to prevent tracking or flowing of sediment onto public rights-of-way.

c. Cleanout any measures used to trap sediment as needed.

d. All sediment spilled, dropped, washed or tracked on to public rights-of-way should be removed immediately by the Contractor.

e. When necessary, wheels should be cleaned to remove sediment prior to entrance onto public rights-of-way.

f. When washing is required, it should be done on an area stabilized with crushed stone that drains into an approved sediment trap or sediment basin.

g. All sediment should be prevented from entering any storm drain, ditch or water course by using approved methods.

6. Tree Protection – Chain Link Fence

a. Repair or replace any chain link fence damaged by construction activities.

7. Tree Protection – Wood Slats

a. Repair or replace any wood slats damaged by construction activities.

8. Excelsior Matting

a. Replace matting as needed to prevent erosion from occurring.

9. Temporary Mulch

a. Replace mulch as needed to prevent erosion from occurring.

G6.08 REMOVAL AND FINAL CLEANUP

A. Once the site has been fully stabilized against erosion, remove sediment control devices and all accumulated silt. Dispose of silt and waste materials in proper manner. Re-grade all areas disturbed during this process and stabilize against erosion with surfacing materials as indicated on the Plans.

G6.09 PAYMENT

A. No separate payment will be made for work performed in accordance with this specification, and the cost thereof shall be included in the proper items of the Proposal and Bid Schedule.

END OF SECTION

TECHNICAL SPECIFICATIONS

SECTION G7 – LOAMING, HYDROSEEDING AND PERMANENT EROSION CONTROL

G7.01 SCOPE OF WORK

A. This specification covers the requirements to provide erosion control and place topsoil, finish grade, apply fertilizer, hydraulically apply seed and mulch and maintain all seeded areas as shown on the Plans and as specified herein, including all areas disturbed by the Contractor.

G7.02 SUBMITTALS

A. Within 30 days after the Notice to Proceed, the Contractor shall submit to the Engineer or the City for approval, samples of all materials to be used and all other pertinent data to illustrate conformance to the specification found within.

G7.03 TOPSOIL

A. Topsoil shall be fertile, friable, natural topsoil typical of topsoil of the locality and shall be obtained from a well drained site that is free of flooding. It shall be without admixture of subsoil or slag and free of stones, lumps, plants or their roots, sticks, clay, peat and other extraneous matter and shall not be delivered to the site or used while in a frozen or muddy condition. Topsoil as delivered to the site or stockpiled shall have pH between 6.0 and 7.0 and shall contain not less than three (3) percent organic matter as determined by loss of ignition of moisture-free samples dried at 100 degrees Celsius. The topsoil shall meet the following mechanical analysis:

	Percentage Passing
1-inch screen opening	100
No. 10 mesh	95 - 100
No. 270 mesh	35 - 75
0.002 mm*	5 - 25

* Clay size fraction determined by pipette or hydrometer analysis.

B. At least 10 days prior to anticipated start of topsoiling operations, a one pint sample of topsoil material shall be delivered by the Contractor to a laboratory for testing and approval. All testing shall be at the sole expense of the Contractor. Based on tests performed by the laboratory, the topsoil shall be identified as acceptable, acceptable with certain fertilizer and limestone applications or unacceptable. If the topsoil is found acceptable the fertilizer and lime requirements will be as specified or as recommended by the laboratory. If the topsoil is found unacceptable, the Contractor shall be responsible for identifying another source of topsoil and shall incur all expenses associated with testing additional samples. All topsoil incorporated into the site work shall match the sample provided to the laboratory for testing. Topsoil stockpiled under other Sections of these Specifications may be used subject to the testing and approval outlined above. Contractor will be responsible for screening stockpiled topsoil and providing additional topsoil as required at his/her own expense.

C. Lime shall be ground limestone containing not less than 85-percent calcium and magnesium carbonates and be ground to such fineness that at least 50-percent shall pass a 100-mesh sieve and at least 90-percent shall pass a 20-mesh sieve.

D. All planting shall be done between May 1 and September 15, except as specifically authorized in writing. If planting is authorized to be done outside the dates specified, the seed shall be planted with the addition of winter fescue (Kentucky 31) at a rate of 100 lbs. per acre.

E. The seed shall be furnished and delivered premixed in the proportions specified within. A Manufacturer's Certificate of Compliance to the specified mixes shall be submitted by the Manufacturers for each seed type. These certificates shall include the guaranteed percentages of purity, weed content and germination of the seed and also the net weight and date of shipment. No seed may be sown until the Contractor has submitted the certificates.

F. Seed shall be delivered in sealed containers bearing the dealer's guaranteed analysis.

G. Mulch shall be a specially processed cellulose fiber containing no growth or germination-inhibiting factors. It shall be manufactured in such a manner that after addition and agitation in slurry tanks with water, the fibers in the material become uniformly suspended to form a homogeneous slurry. When sprayed on the ground, the material shall allow absorption and percolation of moisture. Each package of the cellulose fiber shall be marked by the manufacturer to show the air-dry weight content and not contain in excess of 10-percent moisture.

H. Excelsior matting blanket installed in all drainage swales and ditches shall be in accordance with Section G6 - SEDIMENTATION AND TEMPORARY EROSION CONTROL.

G7.04 APPLICATION OF TOPSOIL

A. Unless otherwise shown on the plans, topsoil shall be placed to a minimum compacted depth of six (6) inches on all parts of the site not covered with structures, pavement, or existing woodland.

B. For all areas to be seeded:

1. Fertilizer (10-20-10) shall be applied at the rate of 30-lbs. per 1,000-sq. ft. or as determined by the soil test.

2. Seed shall be applied at the rate of five (5) lbs. per 1,000-sq. ft.

3. Fiber mulch shall be applied at the rate of 40-lbs. per 1,000-sq. ft.

C. After the topsoil is placed and before it is raked to true lines and rolled, limestone shall be spread evenly over the loam surface and thoroughly incorporated by heavy raking to at least one half the depth of topsoil.

D. The application of fertilizer may be performed hydraulically in one operation with hydroseeding and fiber mulching. The Contractor is responsible for cleaning all structures and paved areas of unwanted deposits of the hydroseeded mixture.

G7.05 INSTALLATION OF TOPSOIL

A. Previously established grades, as shown on plans shall be maintained in a true and even condition.

B. Subgrade shall be prepared by tilling prior to placement of topsoil to obtain a more satisfactory bond between the two (2) layers. Tillage operations shall be across the slope. Tillage shall not take place on slopes steeper than two (2) horizontal to one vertical or where tillage equipment cannot be operated. Tillage shall be accomplished by disking or harrowing to a depth of nine (9) inches parallel to contours. Tillage shall not be performed when the subgrade is frozen, excessively wet, extremely dry or in other conditions which would not permit tillage. The subgrade shall be raked and all rubbish, sticks, roots and stones larger than two (2) inches shall be removed. Subgrade surfaces shall be raked or otherwise loosened immediately prior to being covered with loam.

C. Topsoil shall be placed over approved areas to a depth sufficiently greater than required so that after natural settlement and light rolling, the complete work will conform to the lines, grades and elevations indicated. No loam shall be spread in water or while frozen or muddy.

D. After topsoil has been spread, it shall be carefully prepared by scarifying or harrowing and hand raking. All stiff clods, lumps, roots, litter and other foreign material shall be removed from the loamed area and disposed of by the Contractor. The areas shall also be free of smaller stones, in excessive quantities, as determined by the Engineer or the City. The whole surface shall then be rolled with a hand roller weighing not more than 100-lbs per foot of width. During the rolling, all depressions caused by settlement of rolling shall be filled with additional loam and the surface shall be regraded and rolled until a smooth and even finished grade is created.

E. Seeding shall be done within 10 days following soil preparation. Seed shall be applied hydraulically at the rates and percentages indicated. The spraying equipment and mixture shall be so designed that when the mixture is sprayed over an area, the grass seed and mulch shall be equal in quantity to the specified rates. Prior to the start of work, the Contractor shall furnish the Engineer with a certified statement as to the number of pounds of materials to be used per 100-gallons of water. This statement shall also specify the number of square feet of seeding that can be covered with the quantity of solution in the Contractor's hydroseeder. Upon completion of seeding operations, the Contractor shall furnish the Engineer and the City with a certified statement on the actual quantity of solution applied.

F. In order to prevent unnecessary erosion of newly topsoiled and graded slopes and unnecessary siltation of drainageways, the Contractor shall carry out seeding and mulching as soon as he/she has satisfactorily completed a unit or portion of the project. A unit or portion of the project shall be determined by the City or Engineer. When protection of newly loamed and graded areas is necessary at a time which is outside of the normal seeding season, the Contractor shall protect those areas by what ever means necessary as approved by the Engineer and the City and shall be responsible for prevention of siltation in the areas beyond the limit of work.

G. When newly graded subgrade areas cannot be topsoiled and seeded because of season or weather conditions and will remain exposed for more than 30 days, the Contractor shall protect those areas against erosion and washouts in accordance with Section G6 - SEDIMENTATION AND TEMPORARY EROSION CONTROL, or by other measures as approved by the Engineer and the City. Prior to application of topsoil, any such materials applied for erosion

control shall be removed or thoroughly incorporated into the subgrade by disking. Fertilizer shall be applied prior to spreading of topsoil.

H. On slopes, the Contractor shall provide against washouts by a method approved by the Engineer and the City. Any washout which occurs shall be regraded and reseeded at the Contractor's expense until a good sod is established.

G7.06 HYDROMULCHING

A. Fertilizer: 18-18-5, (Nitrogen, Phosphoric Acid, Potash) show release granular at a rate of 25-lbs per 1,000-sq. ft.

B. Water: The Contractor shall provide water necessary for grass planting and maintenance until acceptance by the City.

C. Planting Seasons: Grass planting by sodding, sprigging, or hydromulching shall normally be done between May 1 and September 15.

D. Hydromulching General

1. Submit Manufacturer's product specifications and guaranteed purity analysis for fertilizer.

2. Product Delivery, Storage and Handling

a. Deliver fertilizer to site in original unopened containers bearing Manufacturer's guaranteed chemical analysis, name, trademark and conformance to State Law.

b. Store fertilizer in a dry location and protect from weather.

3. Guaranty and Replacement

a. Provide guaranty for a period of one year after final completion and acceptance of project, that the installed grass areas be at least the quality and condition as during acceptance.

b. Rehydromulch unacceptable areas during the guaranty period. Guaranty shall not include damage or loss of lawn due to acts of God, acts of vandalism or negligence on the part of the City.

E. Native Grass Hydromulching-Products

1. Grass Seed: Common Bermuda grass, hulled, minimum 82% pure live seed. All grass seed shall be free from noxious weed, grade "A" recent crop, recleaned and treated with appropriate fungicide at time of mixing. Seed shall be furnished in sealed, standard containers with dealer's guaranteed analysis.

2. Mulch: Conwed regular wood fiber mulch or approved equal.

3. Fertilizer: 18-18-5, water-soluble or an approved equal.

4. Topsoil: Supply high quality imported topsoil of loamy character to the limits shown on the Plans, high in humus and organic content from local agriculture source. Topsoil to be

free from clay, lumps, coarse sands, stones, roots and other foreign matter. There shall be no toxic amounts of acid or alkaline elements. Soil to be used for on-site mixing of backfill.

F. Native Grass Hydromulching-Execution

1. Preparation: Fine grade to final elevation removing any debris and insuring the seedbed is smooth.

2. Installation: Use a hydromulcher (sprayer) and apply the mixture at the following rate (mix in accordance with Manufacturer's recommendations).

a. Hydromulch mixture shall contain 2.5-lbs. of common Bermuda grass seed per 1,000-sq. ft. hydromulch applied.

b. Mulch – 60-lbs. per 1,000-sq. ft.

c. Fertilizer – 25-lbs (18-18-5) per 1,000-sq. ft.

3. General Maintenance

a Water the completed installation as necessary to insure germination of grass.

b. Maintain grass areas until complete germination and establishment of all areas.

c. Correct defective work as soon as apparent. Maintenance shall include, but not be limited to, weeding and fertilizing.

d. Clean up: Remove trash and debris from the site.

e. Acceptance: Substantial completion inspection to determine acceptance of grass areas will be made by the City after complete germination and coverage has been attained.

G7.07 MAINTENANCE OF DEVELOPING GRASS

A. The Contractor shall water and maintain all grassed areas until final acceptance. He shall also re-fertilize at the rate of one pound of nitrogen and one pound of phosphorous per 1,000-sq. ft. every 60 days until the grass is accepted.

B. Areas which, due to settling or improper leveling, do not have positive drainage shall be re-leveled with topsoil and replanted with grass.

C. Areas damaged by erosion, vehicle ruts and similar damage shall be re-leveled with topsoil and replanted. Finished ground surface shall be sufficiently smooth and level to facilitate mowing.

G7.08 ACCEPTANCE

A. Work under this section shall be considered acceptable when finish graded surfaces are level and well-drained, when there are no bare spots larger than three (3) square feet, when no more than 10 percent of the total area has bare spots larger than one square foot, when not more than 15 bare spots larger than six (6) inches square and the grass is at least two (2) inches high, and when other requirements listed herein are met.

B. Acceptance of work normally coincides with final acceptance of the entire project. However, seasonal factors may be cause for delay in grass planting, development, and acceptance.

C. The City will accept responsibility for normal maintenance when grass is accepted. However, the Contractor shall remain responsible for any subsequent grass damage that he causes and for warranty of materials and workmanship for a period of not less than one year from the time of acceptance.

D. The Contractor shall furnish full and complete written instruction for maintenance of the seeded areas to the City at the time of acceptance.

G7.09 PAYMENT

A. No separate payment will be made for finish grading, placement of topsoil or grass planting and fertilizing. All related costs shall be included in the proper item of the Proposal and Bid Schedule.

END OF SECTION

SECTION G8 – MISCELLANEOUS WORK AND CLEANUP

G8.01 SCOPE OF WORK

A. This specification covers the requirements to do the miscellaneous work not specified in other sections but obviously necessary for the proper completion of the work as shown on the Plans.

G8.02 SUBMITTALS

A. Within 10 days after the Notice to Proceed, the Contractor shall submit to the Engineer, in triplicate, a breakdown of any lump sum included in the Proposal and Bid Form. This breakdown shall be subject to approval by the Engineer and when so approved shall become the basis for determining progress payments and for negotiation of change orders, if required. In some contracts, a lump sum item shall not be provided in the Proposal and Bid Form and shall be subsidiary to the other work items.

G8.03 GENERAL

A. When applicable, the Contractor will perform the work in accordance with other sections of this Specification. When no applicable specification exists, the Contractor shall perform the work in accordance with the best modern practice and/or as directed by the Engineer.

B. The work of this Section includes, but is not limited to, the following:

1. Crossing and Relocating Existing Utilities.
2. Restoring Driveways, Fences and Curbing.
3. Cleaning Up.
4. Incidental Work.
5. Restoring Easements and Rights-of-Way.

G8.04 CROSSING AND RELOCATING EXISTING UTILITIES

A. This item includes any extra work required in crossing culverts, water courses including streams and drainage ditches, drains, gas mains, water mains and water services and other utilities. This work shall include but is not limited to the following: bracing, hand excavation and backfill (except screened gravel) and any other work required for crossing the utility or obstruction not included for payment in other items of this specification. Notification of Utility Companies shall be the Contractor's responsibility.

B. In locations where existing utilities cannot be crossed without interfering with the construction of the work as shown on the Plans, the Contractor shall remove and relocate the utility as directed by the Engineer or Representative of the City or cooperate with the Utility Companies concerned if they relocate their own utility.

C. At pipe crossings and where designated by the Plans, the Contractor shall furnish and place crushed stone bedding so that the existing utility or pipe is firmly supported for its entire exposed length. The bedding shall extend to the mid-diameter of the pipe crossed.

G8.05 RESTORING OF DRIVEWAYS AND FENCES

A. Existing public and private driveways disturbed by the construction shall be replaced. Paved drives shall be repaved to the limits and thicknesses existing prior to construction. Gravel dirt roads and drives shall be replaced and regraded.

B. Fences in the vicinity of the work shall be protected from damage. If damaged, fences shall be replaced in condition equal to that prior to being damaged and the work shall be satisfactory to the City.

G8.06 CLEANING UP

A. The Contractor shall remove all construction material, excess excavation, buildings, equipment and other debris remaining on the job as a result of construction operations and shall restore the site of the work to a neat and orderly condition. All stored materials shall be kept in a neat manner, secured and protected from the public.

G8.07 INCIDENTAL WORK

A. Do all incidental work not otherwise specified, but obviously necessary to the proper completion of the Contract as specified and as shown on the Plans.

G8.08 RESTORING THE EASEMENTS AND RIGHTS-OF-WAY

A. Portions of the work may be within easements through private property. The Contractor shall be responsible for all damage to private property due to his/her operations. The Contractor shall protect from injury all walls, fences, cultivated shrubbery and vegetables, fruit trees, pavement, underground facilities, such as water pipes, or other utilities which may be encountered along the easement. If removal and replacement are required, it shall be done in a workmanlike manner so that replacement is equivalent to that which existed prior to construction.

B. Existing lawn and sod surfaces damaged by construction in easements shall be replaced. The Contractor may cut and replace the lawn and sod, or may restore the areas with an equivalent depth and quality of loam, seeded and fertilized as specified in Section G7 - LOAMING, HYDROSEEDING AND PERMANENT EROSION CONTROL if acceptable to the owner of the private property and the City. These areas shall be maintained and re-seeded or re-sodded at the option of the owner of the private property and the City, if necessary, until all work under this Contract has been completed and accepted. Any additional work required to restore easements to their original condition shall be performed by the Contractor.

G8.09 PAYMENT

A. No separate payment shall be made for work performed in accordance with this section of the specifications, and the cost thereof shall be included in the proper items of the Proposal and Bid Schedule.

END OF SECTION

TECHNICAL SPECIFICATION

SECTION G9-STRUCTURAL EXCAVATION

G9.01 SCOPE OF WORK

A. This specification covers the requirements for excavation for the placing of structures, except pipe, for the disposal of such excavated material, and for the backfilling around completed structures to the level of the original ground.

G9.02 SUBMITTALS

A. None required unless specifically called for in the Plans, Standards or requested by the Engineer or the City.

G9.03 CONSTRUCTION METHODS

A. Excavation shall be done in accordance with the lines and depths indicated on the Plans or as established by the City. Unless otherwise specified on the Plans or permitted by the City no excavation shall be made outside a vertical plane three (3) feet from the footing lines and parallel thereto. When caissons are provided, no excavation will be permitted outside the outer faces of the caissons.

B. To permit the City to judge the adequacy of a proposed foundation, the Contractor, if requested, shall make soundings or take cores to determine the character of the subgrade materials. The maximum depth of soundings or cores will in general, not exceed five (5) feet below the proposed footing grade. It is the intent of this provision that soundings shall be made at the time the excavation in each foundation is approximately complete.

C. Excavations shall conform to elevations shown on the Plans, or raised or lowered by written order of the City, when such alterations are judged proper. When deemed necessary to increase or decrease the plan depth of footings, the alterations in the details of the structure shall be as directed by the City. The City shall have the right to substitute revised details resulting from consideration of changes in the design conditions.

D. When a structure is to be placed on an excavated surface other than rock, special care shall be taken not to disturb the bottom of the excavation and the final excavation to grade shall not be performed until just before the footing is placed.

E. Excavated material required to be used for backfill may be deposited by the Contractor in storage piles at points convenient for its rehandling during the backfilling operations and with the approval of the City.

F. For all single and multiple box culverts, pipe culverts, pipe arch culverts, and box sewers of all types, where the soil encountered at established footing grade is a quicksand, muck, or similar unstable material, the following procedure shall be used unless other methods are called for on the Plans:

1. The depth to which unstable material is removed will be determined by the City. The depth will not exceed two (2) feet below the footing of culverts that are two (2) feet or more in height, and will not exceed the height of culverts of those less than two (2) feet high. Excavation shall be carried at least one (1) foot horizontally beyond the limits of the structure on all sides. All unstable soil removed shall be replaced with suitable stable material, in uniform layers of suitable depth for compaction as directed by the City. Each layer shall be wetted; if necessary, and compacted by rolling or tamping as required to provide a stable foundation for the structure. Soil which has sufficient stability to properly sustain the adjacent sections of the roadway embankment will be considered a suitable foundation material.

2. When in the opinion of the City, it is not feasible to construct a stable footing as outlined above, the Contractor shall construct it by the use of special materials, such as flexible

base, cement stabilized base, cement stabilized backfill or other material, as directed by the City.

G. When the material encountered at footing grade of a culvert is found to be partially rock, or incompressible material, and partially a compressible soil which is satisfactory for the foundation, the incompressible material shall be removed for a depth of six (6) inches below the footing grade and backfilled with a compressible material similar to that used for the rest of the structure.

G9.04 BACKFILLING

A. General: As soon as practicable, all portions of excavation not occupied by the permanent structure shall be backfilled. Back-fill material shall be free from large or frozen lumps, wood or other extraneous material.

1. That portion of backfill which will not support any portion of completed roadbed or embankment shall be placed in layers not more than 10-inches in depth (loose measurement) and shall be compacted to a density comparable with the adjacent, undisturbed material.

2. That portion of the backfill which will support any portion of the roadbed or embankment or is within two (2) feet of the roadbed or embankment shall be placed in uniform layers not to exceed six (6) inches in depth (loose measurement) and each layer compacted to the density specified for the appropriate material. Each layer of backfill material, if dry, shall be wetted uniformly to the moisture content required to obtain the specified density and shall be compacted to that density by means of mechanical tamps, except that the use of rolling equipment of the type generally used in compacting embankments will be permitted on portions which are accessible to such equipment. All portions of embankment too close to any portion of a structure to permit compaction by the use of the blading and rolling equipment used on adjoining sections of embankment, shall be placed and compacted in the same manner as specified above for backfill material. These provisions require the mechanical compaction, by means of either rolling equipment or mechanical tamps, of all backfill and embankment adjoining the exterior walls and wingwalls of culverts. Unless otherwise provided by the Plans or Special Conditions, hand tamping will not be accepted as an alternate for mechanical compaction. As a general rule, material used in filling or backfilling the portions described in this paragraph shall be an earth free of any appreciable amount of gravel or stone particles more than four (4) inches in greatest dimension and of a gradation that permits thorough compaction. The percentage of fines shall be sufficient to fill all voids and insure a uniform and thoroughly compacted mass of proper density. When required by the Plans or by written order of the City, cement stabilized material shall be used for backfilling.

3. All portions of fill and backfill described in the preceding paragraph shall be compacted to the same density requirements specified for the adjoining sections of embankment in accordance with the governing specifications therefore.

4. Where no embankment is involved on the Project and no specifications therefor are included in the Contract, all backfill shall be compacted to a density comparable with the adjacent undisturbed material.

5. Care shall be taken to prevent any wedging action of backfill against the structure, and the slopes bounding the excavation shall be stepped or serrated to prevent such action.

6. Backfilling shall not proceed prior to inspection and approval of the inspector.

G9.05 PIPE CULVERTS

A. The following requirements shall apply to the backfilling of pipe culverts in addition to the pertinent portions of the general requirements given in the preceding and in pipe bedding Standards.

1. Backfilling shall be continued in this manner to the elevation of the top of the pipe. Special care shall be taken to secure thorough compaction of the material placed under the haunches of the pipe. In the case of pipe in trenches, that portion of the backfill above the top of the pipe which supports embankment or the roadbed or is within two (2) feet of the roadbed or embankment shall receive mechanical compacting as specified, and the portion which will not support any portion of embankment or roadbed shall be placed in layers not more than ten (10) inches in depth (loose measurement) and shall be compacted by whatever means the Contractor chooses, to a density comparable with the adjacent, undisturbed material.

G9.06 PAYMENT

A. No separate payment will be made for work performed in accordance with this section of the specifications, and the cost thereof shall be included in the proper items of the Proposal and Bid Schedule.

END SECTION

THIS PAGE INTENTIONALLY LEFT BLANK.

TECHNICAL SPECIFICATIONS

SECTION SD2 – ROADWAY EXCAVATION

SD2.01 SCOPE OF WORK

A. This specification covers the requirements for shaping and finishing of all earthwork on the entire length of roadway, and approaches to same, in conformity with the required lines, grades and typical cross sections and in accordance with specification requirements herein outlined. Compaction shall conform to the method of "Density Control" and/or "Ordinary Compaction" as shown on the Plans and Specifications.

SD2.02 SUBMITTALS

A. None required unless specifically called for in the Plans, Standards, or requested by the City or Engineer.

SD2.03 CONSTRUCTION METHODS

A. All roadway excavation and corresponding embankment construction shall be performed as specified herein and in Section S3- EMBANKMENT, and the completed roadway shall conform to the established alignment, grades and cross sections.

B. All suitable excavated materials shall be utilized, insofar as practicable, in constructing the required roadway sections. Unsuitable roadway excavation and roadway excavation in excess of that needed for the construction of the roadway shall be disposed of outside the limits of the right-of-way. Unsuitable material encountered below subgrade elevation in roadway cuts, shall be removed and replaced, as directed by the Representative of the City with material from the roadway excavation or with other suitable material.

C. During construction, the roadbed and ditches shall be maintained in such condition as to insure proper drainage at all times and ditches and channels shall be so constructed and maintained as to avoid damage to the roadway section. Soils with plasticity index (PI) of 20 or more shall be stabilized with an amount of lime adequate to reduce the PI to less than 20. Type A Grade 1 base material may be used with a minimum ratio of 1 to 1, in lieu of lime. If using lime treatment refer to Item 260 in the Texas Department of Transportation's "Standard Specifications for Construction of Highways, Streets and Bridges".

NOTE: **ALL UNDERGROUND UTILITIES SHALL BE INSTALLED PRIOR TO ANY LIME TREATMENT OR FLEXIBLE BASE PLACEMENT.**

NOTE: Blue-tops will be set on the center and crown of the streets or roads at every 50-foot station. These grade stakes will be to finished grade and visible for inspection before flexible base is applied.

SD2.04 PAYMENT

A. No separate payment will be made for work performed in accordance with this specification. Select back fill shall be paid for according to the unit price per cubic yard according to the appropriate item, and the cost thereof shall be included in the proper items of the Proposal and Bid Schedule.

END OF SECTION

THIS PAGE INTENTIONALLY LEFT BLANK.

TECHNICAL SPECIFICATIONS

SECTION SD3 – EMBANKMENT AND SUBGRADE

SD3.01 SCOPE OF WORK

A. This specification covers the requirements for the placement and compaction of all materials obtained from roadway, borrow, channel and structural excavation for utilization in the construction of roadway embankments, subgrade, levees and dikes (berms).

SD3.02 SUBMITTALS

A. Within 30 days after the Notice to Proceed, the Contractor shall submit to the Engineer or the City for approval, technical product literature including the source of the material, equipment and all other pertinent data to illustrate conformance to the specification found within.

SD3.03 CONSTRUCTION METHODS

A. Prior to placing any embankment, all "Preparing Right of Way" operations shall have been completed on the excavation sources and areas over which the embankment is to be placed. Stump holes or other small excavations in the limits of the embankments shall be backfilled with suitable materials and thoroughly tamped by approved methods before commencing embankment construction. The surface of the ground, including plowed loosened ground or surface roughened by small washes or otherwise shall be restored to approximately its original slope by blading or other methods. Where indicated on the Plans, the ground surface thus prepared shall be compacted by sprinkling and rolling.

B. The surface of the ground of all unpaved and proposed paved areas, which are to receive embankment, shall be loosened by scarifying or plowing to a depth of not less than six (6) inches. The loosened material shall be recompacted with the new embankment as hereinafter specified.

C. Where directed the surface of hillsides to receive embankment shall be loosened by scarifying or plowing to a depth of not less than six (6) inches, or cut into steps before embankment materials are placed. The embankment shall then be placed in layers, as hereinafter specified, beginning at the low side in part width layers and increasing the widths as the embankment is raised. The material, which has been loosened, shall be recompacted simultaneously with the embankment material placed at the same elevation.

D. Where embankments are to be placed adjacent to or over existing roadbeds, the roadbed slopes shall be plowed or scarified to a depth of not less than six (6) inches and the embankment built up in successive layers, as hereinafter specified, to the level of the old roadbed before its height is increased. Then, if directed, the top of the old roadbed shall be scarified and recompacted with the next layer of the new embankment. The total depth of the scarified and added material shall not exceed the permissible depth of layer.

E. Trees, shrubs, roots, vegetation or other unsuitable materials shall not be placed in embankment.

F. Except as otherwise required by the plans, all embankment shall be constructed in layers approximately parallel to the finished grade of the roadbed and unless otherwise specified, each layer shall be so constructed as to provide a uniform slope of ¼-inch per foot from the center line of the roadbed to the outside, except that on superelevated curves each layer shall be constructed to conform to the superelevation required by the governing standard.

G. Embankments shall be constructed to the grade established by the Engineer or the City and completed embankments shall correspond to the general shape of the typical sections shown on the plans and each section of the embankment shall correspond to the detailed section or slopes established by the Engineer. After completion of the roadway, it shall be continuously maintained to its finished section and grade until the project is accepted.

SD3.04 EARTH EMBANKMENTS

A. Earth embankments shall be defined as those composed principally of material other than rock, and shall

be constructed of accepted material from approved sources.

B. Except as otherwise specified, earth embankments shall be constructed in successive layers for the full width of the individual roadway cross section and in such lengths as are best suited to the sprinkling and compaction methods utilized.

C. Layers of embankment may be formed by utilizing equipment (which will spread the material as it is dumped, or formed by being spread by blading or other acceptable methods from piles or windrows dumped from excavating or hauling equipment in such amounts that material is evenly distributed.)

D. Minor quantities of rock encountered in constructing earth embankment shall be incorporated in the specified embankment layers, or may be placed in accordance with the requirements for the construction of rock embankments in the deeper fills within the limits of haul shown on the Plans, provided such placement of rock is not immediately adjacent to structures. Also, rock may be placed in the portions of embankments outside the limits of the completed roadbed width where the size of the rock prohibits their incorporation in the normal embankment layers.

E. Each layer of embankment shall be uniform as to material, density and moisture content before beginning compaction. Where layers of unlike materials abut each other, each layer shall be feather edged for at least 100-feet or the material shall be so mixed as to prevent abrupt changes in the soil. No material placed in the embankment by dumping in a pile or windrow shall be incorporated in a layer in that position, but all such piles or windrows shall be moved by blading or similar methods. Clods or lumps of material shall be broken and the embankment material mixed by blading, harrowing, disking or similar methods to the end that a uniform material of uniform density is secured in each layer.

F. Water required for sprinkling to bring the material to the moisture content necessary for maximum compaction shall be evenly applied and it shall be the responsibility of the Contractor to secure a uniform moisture content throughout the layer by such methods as may be necessary.

G. In order to facilitate uniform wetting of the embankment material, the Contractor may apply water at the material source if the sequence and methods used are such as not to cause an undue waste of water. Such procedure shall be subject to the approval of the Representative of the City.

H. All earth cuts, full width or part width cuts in side hill, which are not required to be excavated below subgrade elevation for base and backfilled, shall be scarified to a uniform depth of at least six (6) inches below grade, and the material shall be mixed and reshaped by blading and then sprinkled and rolled in accordance with the requirements outlined above for earth embankments and to the same density as that required for the adjacent embankment.

I. Compaction of embankments shall be obtained by the method hereinafter described as "Ordinary Compaction" or the method hereinafter described as the "Density Control" method.

SD3.05 <u>ORDINARY COMPACTION (outside of Roadway Pavement)</u>

A. When the "Ordinary Compaction" method is specified, the following provisions shall govern: Each layer shall not exceed eight (8) inches of loose depth, and shall be compacted until there is no evidence of further compaction. Prior to and in conjunction with the rolling operation, each layer shall be brought to the moisture content ordered by the Representative of the City, and shall be kept leveled with suitable equipment to insure uniform compaction over the entire layer.

SD3.06 <u>DENSITY CONTROL</u>

A. When the "Density Control" method compaction is specified, each layer shall be compacted to the required density by any method, type and size of equipment which will give the required compaction. The depth of layers, prior to compaction, shall depend upon the type of sprinkling and compacting equipment used. However, maximum depth 16-inches loose and 12-inches compacted shall not be exceeded unless approved by a representative of the City. Prior to and in conjunction with the rolling operation, each layer shall be brought to the moisture content necessary to obtain the required density and shall be kept leveled with suitable equipment to insure uniform compaction over the entire layer.

B. For each layer of earth embankment and select material, it is the intent of this specification to provide the density as required herein, unless otherwise shown on the Plans. Swelling soils (soils with plasticity index (PI) of 20 or more) shall have a density of not less than 95% nor more than 102 % of density as determined by Tex-114-E, with moisture content not less than optimum. Non-swelling soils (soils with plasticity index (PI) less than 20) shall have a density of not less than 95% of density as determined by Tex-114-E at ±3% of the optimum moisture content. Determination of the plasticity index shall be the responsibility of the Contractor or Developer. Field density determinations (Tex-114-E) will be taken every 2000 square yards of roadbed surface at the Contractor's expense.

C. After each layer of earth embankment or select material is complete, tests will be required. If the material fails to meet the density specified, the course shall be reworked as necessary to obtain specified density. Such procedure shall be determined by, and subject to, the approval of the Representative of the City.

D. The subgrade shall be tested by proof rolling in conformity with Texas Department of Transportation, Item 216, "Rolling (Proof)" in the Standard Specifications for Construction of Highways, Streets and Bridges prior to placement of the first course of flexible base material.

E. Should the subgrade, due to any reason or cause, lose the required stability, density or finish before the pavement structure is placed, it shall be recompacted and refinished at the sole expense of the Contractor. Excessive loss of moisture in the subgrade shall be prevented by sprinkling, sealing or covering with a subsequent layer or granular material. Excessive loss of moisture shall be construed to exist when the subgrade soil moisture content is more than three (3) percent below the optimum for compaction ratio density.

SD3.07 ROCK EMBANKMENTS

A. Rock Embankments shall be defined as those composed principally of rock, and shall be constructed of accepted material from approved sources.

B. Except as otherwise specified, rock embankments normally shall be constructed in successive layers for the full width of the individual roadway cross section and of 18-inches or less in depth.

C. The maximum dimension of any rock used in embankment shall be less than the depth of the embankment layer. All oversized rock which is otherwise suitable for construction shall be broken to the required dimensions and utilized in embankment construction where proposed by Plans.

D. Unless otherwise provided, the upper or final layer of the embankment shall contain no stones larger than four (4) inches in their greatest dimension, and, insofar as such is available by selection from the excavation, shall be composed of material so graded that the density and uniformity of the surface layer may be secured by the methods and requirements as set forth for "Ordinary Compaction" or "Density Control" method.

E. When the "Ordinary Compaction" method of compaction is specified, each embankment layer shall be rolled as directed, and where the embankment materials require, shall be sprinkled when and to the extent directed by the Representative of the City.

F. When the "Density Control" method of compaction is specified, each layer shall be compacted to the required density as outlined for "Earth Embankment", except in those layers where rock will make density testing difficult, the Representative of the City may require the layer to be proof rolled to insure proper compaction.

SD3.08 AT CULVERTS AND BRIDGES

A. Embankments adjacent to culverts and bridges which cannot be compacted by use of the blading and rolling equipment used in compacting and adjoining sections of embankment shall be compacted in the manner prescribed under Specification Section G9- STRUCTURAL EXCAVATION and Specification Section G4- PIPE EXCAVATION, TRENCHING, EMBEDMENT, ENCASEMENT AND BACKFILLING.

B. Embankments placed around spill-through type abutments, shall be constructed in six (6)-inch loose

layers of uniform suitable material placed in such manner as to maintain approximately the same elevation on each side of the abutment, and all materials shall be mixed, wetted and compacted as specified above.

C. As a general rule, embankment material placed adjacent to any portion of any structure and in the first two (2) layers above the top of any culvert or similar structure shall be an earth, free of any appreciable amount of gravel or stone particles more than four (4) inches in greatest dimension and of such gradation as to permit thorough compaction. When, in the opinion of the Representative of the City, such material is not readily available, the use of rock or gravel mixed with earth will be permitted, in which case no particles larger than 12-inches in greatest dimension and six (6) inches in least dimension may be used and the percentage of fines shall be sufficient to fill all voids and insure a uniform and thoroughly compacted mass of proper density.

SD3.09 SELECTION OF MATERIALS

A. In addition to the requirements in the excavation items of the specifications covering the general selections and utilization of materials to improve the roadbed, embankments shall be constructed in proper sequence to receive the select material layers shown on the plans, with such modifications as may be directed by the Representative of the City. The layer of embankment immediately preceding the upper layer of select material shall be constructed to the proper section and grade within a tolerance of not more than 0.10 foot from the established section and grade when properly compacted and finished to receive the select material layer.

NOTE: ALL UNDERGROUND UTILITIES SHALL BE INSTALLED PRIOR TO ANY LIME TREATMENT OR FLEXIBLE BASE PLACEMENT.

NOTE: Bluetops will be set on the center, crown, and back of curb of the streets or roads every 50-foot station. These grade stakes will be to finished grade and visible for inspection before flexible base is applied.

SD3.10 PAYMENT

A. No separate payment will be made for work performed in accordance with this specification, and the cost thereof shall be included in the proper items of the Proposal and Bid Schedule.

END OF SECTION

TECHNICAL SPECIFICATIONS

SECTION SD4 – FLEXIBLE BASE
(Crushed Stone)

SD4.01 SCOPE OF WORK

A. This specification covers the requirements for the use of "Flexible Base (Crushed Stone)" for this project.

SD4.02 SUBMITTALS

A. Within 30 days after the Notice to Proceed, the Contractor shall submit to the Engineer for approval, technical product literature including binding material, additives, aggregate source, aggregate type, aggregate gradation and all other pertinent data to illustrate conformance to the specification found within.

SD4.03 GENERAL

A. "Flexible Base (Crushed Stone)"shall consist of a foundation course for surface course or for other base courses; shall be composed of crusher-run broken stone; and shall be constructed as herein specified in one or more courses in conformity with the typical sections shown on Plans and to the lines and grades as established by the Plans.

SD4.04 MATERIAL

A. The material shall be crushed and shall consist of durable particles of stone mixed with approved binding material. The material source shall be approved by the Representative of the City, and conform to the requirements as follows:

B. When properly slaked and tested by standard Texas Department of Transportation laboratory methods, the flexible base material shall meet the following requirements:

C. Physical requirements

a. General. All types shall meet the physical requirements for the specified grade(s) as set forth in Table 1.

Additives, such as, but not limited to, lime, cement or fly ash, shall not be used to alter the soil constants or strengths shown in Table 1, unless otherwise shown on the Plans.

Unless otherwise shown on the Plans, the base material shall have a minimum Bar Linear Shrinkage of two (2) percent as determined by Test Method Tex-107-E, Part II.

b. The flexible base shall be:

1. Type A. Type A material shall be crushed stone produced from oversized quarried aggregate, sized by crushing and produced from a naturally occurring single source. Crushed gravel or uncrushed gravel shall not be acceptable for Type A material. No blending of sources and/or additive materials will be allowed in Type A material.

TABLE 1
PHYSICAL REQUIREMENTS

Grade 1	
Triaxial Class 1: Min. compressive strength, psi: 45 at 0 psi lateral pressure and 175 at 15 psi lateral pressure	
Master Grading	
1-$^{3}/_{4}$"	0
$^{7}/_{8}$"	10-35
$^{3}/_{8}$"	30-50
No. 4	45-65
No. 40	70-85

Grade 1
Max LL 35
Max PI 10
Wet Ball Mill
Max 40
Max increase in passing
No. 40 20

1. Gradation requirements are percent retained on square sieves.

2. When a magnesium soundness value is shown on the Plans the material will be tested in accordance with Test Method Tex-411-A.

Sieve Analysis	Tex-110-E
Moisture-Density Determination	Tex-113-E
Roadway Density	Tex-115-E
Wet Ball Mill	Tex-116-E
Triaxial Tests (Part I or II as selected by the Engineer)	Tex-117-E
Particle Count	Tex-460-A, Part I

Samples for testing the base material for triaxial class, soil constants, gradation and wet ball mill will be taken prior to the compaction operations.

SD4.05 TOLERANCES

A. The limits establishing reasonably close conformity with the specified gradation and plasticity index are defined by the following:

B. The City may accept the material, providing not more than two (2) out of 10 consecutive gradation tests performed are outside the specified limit on any individual or combination of sieves by no more than five (5) percent and where no two (2) consecutive tests are outside the specified limit.

C. The City may accept the material providing not more than 2 out of 10 consecutive plasticity index samples tested are outside the specified limit by no more than two (2) points and where no two (2) consecutive tests are outside the specified limit.

SD4.06 CONSTRUCTION METHODS

A. Preparation of Subgrade

1. The roadbed shall be excavated and shaped in conformity with the typical sections, lines and grades as shown on the Plans. All unstable or otherwise objectionable material shall be removed from the subgrade and replaced with approved material. All holes, ruts and depressions shall be filled with approved material, and if required, the subgrade shall be thoroughly wetted with water and reshaped and rolled to the extent directed in order to place the subgrade in an acceptable condition to receive the base material. The surface of the

subgrade shall be finished to line and grade as established and in conformity with the typical section shown on the Plans, and any deviation in excess of ½-inch in cross section and in a length of 16-feet measured longitudinally shall be corrected by loosening, adding or removing material, reshaping and recompacting by sprinkling and rolling. Sufficient subgrade shall be prepared in advance to insure satisfactory prosecution of work.

B. First Course

1. Immediately before placing the base material, the subgrade shall be checked as to conformity with grade and section.

2. The material shall be delivered in approved vehicles of a uniform capacity and it shall be the charge of the Contractor that the required amount of specified material shall be delivered in each 100-foot station. Material deposited upon the subgrade shall be spread and shaped the same day unless otherwise directed by the City in writing. In the event inclement weather or other unforeseen circumstances render impractical the spreading of the material during the first 24-hour period, the material shall be scarified and spread as directed by the City. The material shall be sprinkled, if directed, and shall then be bladed, dragged and shaped to conform to typical sections as shown on the Plans. The base layer shall be constructed in lifts not exceeding six (6) inches compacted thickness with each course being of equal thickness. All areas and "nests" of segregated coarse or fine material shall be corrected or removed and replaced with well graded material, as directed by the City.

3. The course shall be compacted by the method of compaction hereinafter specified as the "Density Control" method of compaction.

   a. The course shall be sprinkled as required and compacted to the extent necessary to provide not less than the percent density as hereinafter specified under "Density". In addition to the requirements specified for density, the full depth of flexible base shown on the Plans shall be compacted to the extent necessary to remain firm and stable under construction equipment. After each section of flexible base is completed, density tests shall be taken every 750 square yards of roadbed surface or every 250 linear feet, whichever is the least. If the material fails to meet the density requirements, it shall be reworked as necessary to meet these requirements. Throughout this entire operation the shape of the course shall be maintained by blading, and the surface upon completion shall be smooth and in conformity with the typical section shown on the Plans and to the established lines and grades. In that area on which pavement is to be placed, any deviation in excess of ¼-inch in cross section and in a length of 16-feet measured longitudinally shall be corrected by loosening, adding or removing material, reshaping and recompacting by sprinkling and rolling. All irregularities, depressions or weak spots which develop shall be corrected immediately by scarifying the areas affected, adding suitable material as required, reshaping and recompacting by sprinkling and rolling. Should the base course, due to any reason or cause, lose the required stability, density and finish before the surfacing is complete, it shall be recompacted and refinished at the sole expense of the Contractor. The base material shall be placed at the optimum moisture contents to ± 3%.

C. Succeeding Courses

1. Construction methods shall be the same as prescribed for the first course.

D. Density

1. When the "Density Control" method of compaction is used, each course of flexible base shall be compacted to the percent density indicated below. The testing will be as outlined in TEX 113E. It is the intent of this specification to provide in that part of the base included in the flexbase section as shown on the Plans immediately below the finished surface of the roadway, not less that 100 percent of the density as determined by the compaction ratio method. Field

density determination shall be made in accordance with approved methods.

SD4.07 NOTES

A. Invoices showing total amount of flexible base delivered to each street or road shall be furnished to the City before asphalt is applied.

B. Bluetops will be set on the center, crown and back of curb of the streets or roads every 50-foot station or sufficient to maintain line and grade. These grade stakes will be to finished grade and visible for inspection before asphalt is applied.

SD4.08 PAYMENT

A. Payment for furnished and installed flexible base shall be paid according to the unit price per square yard in the proper item of the Proposal and Bid Schedule.

B. All work and materials to complete the installation of flexible base shall be subsidiary to this item.

END OF SECTION

TECHNICAL SPECIFICATIONS

SECTION SD5 - STRIPING

SD5.01 SCOPE OF WORK

A. This specification covers the requirements for furnishing and installing pavement markings as shown on the Plans and specified within.

SD5.02 SUBMITTALS

A. Within 30 days after the Notice to Proceed, the Contractor shall submit to the Engineer or the City for approval, technical product literature including material type, test data, and all other pertinent data to illustrate conformance to the specification found within.

SD5.03 MATERIALS

A. All pavement markings shall be thermoplastic type materials that require heating to elevated temperatures for application. They shall conform to Texas Department of Transportation Materials Specification D-9-8220. Each container of thermoplastic material shall be clearly marked to indicate the color, weight, type of material, Manufacturer's name and the lot/batch number.

SD5.04 STREET SIGNS

A. All signage sheeting shall be high intensity or better. All signage posts shall be 2.375" OD x .095" thin wall steel tubing. All signs shall have breakaway foundations. All signage shall meet the current edition of TMUTCD.

SD5.05 EQUIPMENT

A. All equipment used to place pavement markings shall be maintained in a satisfactory condition. The equipment shall be able to place markings at a rate that will produce a uniform product meeting all the requirements set within item 666 of the standard specifications for Construction of Highways, Streets and Bridges. It shall be capable of placing linear markings up to eight (8) inches in width in a single pass and able to place a center line and no passing barrier line configuration of one (1) broken line with two (2) solid lines at the same time to the alignment and spacing shown on the Plans. Equipment shall be capable of placing lines with clean edges of a uniform cross section within a tolerance of $^1/_8$ of an inch per four (4) inches width of marking. It shall have an automatic cut-off device with manual operating capabilities to provide clean, reasonably square marking ends to the satisfaction of the Engineer or the City and provide a method of applying broken line in an approximate stripe-to-gap ratio of 10 to 30. The length of the stripe shall not be less than 10-feet or more than 10.5-feet. The total length of any stripe-gap cycle shall not be less than 39.5-feet or more than 40.5-feet. It shall provide a continuous mixing and agitation of the pavement marking material. The use of pans, aprons or similar appliances will not be permitted for longitudinal striping applications. Beads shall be applied by an automatic bead dispenser that is attached to the pavement marking equipment in such a manner that the beads are dispensed uniformly and almost instantly as the marking is placed on the pavement surface. The bead dispenser shall have an automatic cut-off control, synchronized with the cut-off of the pavement marking equipment. A hand held thermometer shall be kept on the project during the placement of pavement markings capable of measuring the temperature of the pavement marking material.

SD5.06 CONSTRUCTION METHODS

A. Pavement marking shall be applied with an approximate stripe-to-gap ratio of 10 to 30 when the application is broken line striping. The length of the broken stripe shall not be less than 10-feet nor more than 10.50-feet. The total length of any stripe-gap cycle shall not be less than 39.50-feet nor more than 40.50-feet.

B. With prior approval from the City of Georgetown, pavement markings may be placed on roadways open to traffic. When markings are to be placed under traffic, a minimum of interference to the operation of the traffic flow shall be maintained. Traffic control shall be maintained as shown on the approved

Traffic Control Plan. All markings placed under open-traffic conditions shall be protected from traffic damage and disfigurement.

C. The deviation rate in pavement marking alignment shall not exceed one (1) inch per 200-feet of roadway and the maximum deviation shall not exceed two (2) inches nor shall any abrupt deviations be acceptable.

D. Markings shall have a uniform cross section. The density and quality of the markings shall be uniform throughout their thickness. The applied markings shall have no more than five (5) percent, by area, of holes or voids and shall be free of blisters.

E. Markings shall be reflectorized both internally and externally. Glass beads shall be applied to the materials at a uniform rate sufficient to achieve uniform and distinctive retroflective characteristics when observed in accordance with Test Method Tex-828-B.

F. Pavement markings that are not in alignment or sequence, as shown on the Plans or Standards, shall be removed and replaced at the sole expense of the Contractor.

SD5.07 SURFACE PREPARATION

A. New Portland cement concrete surfaces shall be cleaned to remove curing membrane, dirt, grease, loose and/or flaking existing construction markings and other forms of contamination.

B. Older Portland cement concrete surfaces and asphalt surfaces that exhibit loose and/or flaking existing markings shall be cleaned to remove all loose and flaking markings.

C. All pavement on which pavement markings are to be placed shall be completely dry.

SD5.08 APPLICATION

A. Unless otherwise shown on the Plans, Portland cement concrete surfaces and asphaltic surfaces that are three (3) years old or older shall be sealed by the use of paint type striping. The paint type markings shall be placed a minimum of two (2) and a maximum of 30 calendar days in advance of placing the thermoplastic type pavement markings. If the paint type markings become dirty for any reason prior to placing the thermoplastic type markings, they shall be cleaned by washing, brushing, compressed air or other means approved. The pavement and paint type marking shall both be thoroughly dry before any thermoplastic type markings are placed. The color of the paint type markings shall be the same as the thermoplastic type markings.

B. Pavement markings shall not be applied when the temperature and moisture limitations are beyond the Manufacturer's recommendation. The minimum thickness for thermoplastic markings shall be 0.060-inches (60-mil) for edgeline markings and 0.090-inches (90-mil) for stop bars, legends, symbols, gore and centerline/no passing barrier line markings, when measured in accordance with Test Method Tex-854-B. The maximum thickness of all thermoplastic type markings shall be 0.180-inches (180 mil).

C. All markings which do not meet the specifications found within or are not satisfactory to the striping plan, installation of the markings, or do not meet the requirements of the project, shall be removed and replaced at the sole expense of the Contractor. In the event that damage is done to the pavement surface in the replacement operation, the damage shall be corrected to the satisfaction of the City at the sole expense of the Contractor.

SD5.09 MEASUREMENT AND PAYMENT

A. Payment for furnished and installed pavement markings shall be paid according to the unit price per linear foot in the proper item of the Proposal and Bid Schedule.

B. All work and materials to complete the pavement markings shall be subsidiary to this item.

END OF SECTION

TECHNICAL SPECIFICATIONS

SECTION SD6 –STORM SEWER MANHOLES

SD6.01 SCOPE OF WORK

A. This specification covers the requirements to install precast concrete storm sewer manholes, frames and covers, and appurtenances as shown on the Plans and as specified herein.

SD6.02 SUBMITTALS

A. Within 30 days after the Notice to Proceed, the Contractor shall submit to the Engineer or the City for approval, shop drawings, product data, materials of construction, and details of installation shall be submitted in accordance with Section CIP10- SUBMITTALS. Submittals shall include the following: base sections, riser sections, eccentric conical top sections, flat slab tops, grade rings with notarized certificate indicating compliance with ASTM C478, pipe connection to manhole, manhole frame and cover with notarized certificate indicating compliance with ASTM A48, Class 30, method of repair for minor damage to precast concrete sections, manhole lining system.

B. Design Data

1. Precast concrete structures:

a. Six (6) copies of sectional plan(s) and elevations showing dimensions and reinforcing steel placement.

b. Six (6) copies of concrete design mix.

C. Test Reports

1. Precast concrete structures: Six (6) copies of concrete test cylinder reports from an approved testing laboratory certifying conformance with specifications.

SD6.03 REFERENCE STANDARDS

A. American Society for Testing and Materials (ASTM)

1. ASTM A48 - Specification for Gray Iron Castings.

2. ASTM A615 - Standard Specification for Deformed and Plain Billet-Steel Bars for Concrete Reinforcement.

3. ASTM C33 - Specification for Concrete Aggregates.

4. ASTM C150 - Standard Specification for Portland Cement.

5. ASTM C478 - Standard Specification for Precast Reinforced Concrete Manhole Sections.

6. ASTM D4101 - Specification for Propylene Plastic Injection and Extrusion Materials.

B. American Concrete Institute (ACI)

1. ACI 318 - Building Code Requirements for Reinforced Concrete.

2. ACI 350R - Concrete Sanitary Engineering Structures.

C. American Association of State Highway and Transportation Officials (AASHTO)

1. Standard Specifications for Highway, Streets and Bridges.

D. Occupational Safety and Health Administration (OSHA)

E. Where reference is made to one of the above standards, the revision in effect at the time of bid opening shall apply.

SD6.04 QUALITY ASSURANCE

A. All material shall be new and unused.

B. Materials' quality, manufacturing process and finished sections are subject to inspection and approval by Engineer or other City representative. Inspection may be made at place of Manufacture, at work site following delivery, or both.

C. Materials will be examined for compliance with ASTM specifications, these Specifications and approved Manufacturer's drawings. Additional inspection criteria shall include: appearance, dimensions(s), blisters, cracks and soundness.

D. Materials shall be rejected for failure to meet any Specification requirement. Rejection may occur at place of manufacture, at work site, or following installation. Mark for identification rejected materials and remove from work site immediately. Rejected materials shall be replaced at no cost to City.

E. Repair minor damage to precast concrete sections by approved method, if repair is authorized by Engineer or the City.

SD6.05 PRODUCTS

A. Reference to a Manufacturer's name and model or catalog number is for the purpose of establishing the standard of quality and general configuration desired.

B. Like items of materials/equipment shall be the end products of one Manufacturer in order to provide standardization for appearance, operation, maintenance, spare parts and Manufacturer's service.

C. Provide lifting lugs or holes in each precast section for proper handling.

SD6.06 PRECAST CONCRETE MANHOLE SECTIONS

A. Precast concrete base sections, riser sections, transition top sections, flat slab tops and grade rings shall conform to ASTM C478 and meet the following requirements:

1. Bottom slab thickness shall be 12-inches.

2. Top section shall be flat slab with a minimum clear opening of 32 $^{7}/_{8}$-inches diameter.

3. Base, riser and transition top sections shall have tongue and groove joints.

4. Sections shall be cured by an approved method.

5. Precast concrete sections shall be shipped after concrete has attained 3,000 psi compressive strength.

6. Design precast concrete base, riser, transition top, flat slab top and grade ring for a minimum HS-20 loading plus earth load. Calculate earth load with a unit weight of 130 pounds per cubic foot.

7. Mark date of manufacture, name and trademark of Manufacturer on the inside of each precast section.

8. Construct and install precast concrete base as shown on the Plans.

9. Provide integrally cast knock-out panels in precast concrete manhole sections at locations, and with sizes shown on Plans. Knock-out panels shall have no steel reinforcing.

B. Manhole diameter shall be as shown on the Plans, but not less than the diameter of the largest connecting pipe plus two (2) feet.

C. Pipe Sections: Pipe sections shall conform to current specifications for Precast Reinforced Manhole Sections, ASTM Designation C478, with the following additions:

1. Pipe shall be machine made by a process which will provide for uniform placement of zero slump concrete in the form and compaction by mechanical devices which will assure a dense concrete in the finished product.

2. Aggregates for the concrete shall consist of limestone aggregates in the proportion of at least 75% by weight of the total aggregates.

3. Minimum wall thickness for the manhole risers shall be as listed under Wall "B" in the "Class Tables" of ASTM C76 for Class III pipe.

D. Joints: Joints shall conform to the joint specifications in ASTM C478, C76, and ASTM C443. All manhole sections, including the bottom section, shall be furnished with "O-ring" type rubber gasket joints. The joints shall be furnished and installed with the bell down to resist groundwater infiltration. All joints shall be sealed with mortar or an approved non-shrink grout on the inside and the outside of the manhole. Grade rings shall be mortared to each other and on the inside and outside to provide a waterproof seal.

E. Manhole Steps: Unless specifically approved by the City, manhole steps shall not be provided.

SD6.07 MANHOLE FRAME AND COVER

A. Manhole frames and covers shall be of good quality, strong, tough, even grained cast iron, smooth, free from scale, lumps, blisters, sand holes and defects of any kind which render them unfit for the service for which they are intended. Manhole covers and frame seats shall be machined to a true surface. Castings shall be thoroughly cleaned and subject to hammer inspection. Cast iron shall conform to ASTM A48, Class 30.

B. Manhole covers shall have a diamond pattern, pickholes and the words STORM SEWER as appropriate cast in three (3) inch letters. Manhole frame and covers shall be Neenah Foundry, Western Iron Works, Vulcan Foundry, or equal. Model numbers refer to Western Iron works products:

1. Manhole Frame and cover - WRM-36.

SD6.08 JOINTING PRECAST MANHOLE SECTIONS

A. Seal tongue and groove joints of precast manhole sections with rubber "O"-ring gasket. O-ring gasket shall conform to ASTM C443.

B. Completed joint shall withstand 15 psi internal water pressure without leakage or displacement of gasket or sealant.

SD6.09 PIPE CONNECTIONS TO MANHOLE

A. Connect pipe to manhole in the following ways:

1. Flexible sleeve - Integrally cast sleeve in precast manhole section or install sleeve in a formed or cored opening. Fasten pipe in sleeve with stainless steel clamp(s). Coat stainless steel clamp(s) with bituminous material to protect from corrosion. Flexible sleeve shall be Lock Joint Flexible Manhole Sleeve; Kor-N-Seal connector; PSX Press-Seal Gasket or equal.

2. Compression gasket - Integrally cast compression gasket in precast manhole section. Insert pipe into compression gasket. Compression gasket shall be A-Lok, or equal.

SD6.10 INSTALLATION

A. Manhole Installation

1. Manholes shall be constructed to the dimensions shown on the Plans and as specified herein. Protect all work against flooding and flotation.

2. Place manhole base on a bed of screened gravel eight (8) inches in depth as shown on the Plans. Set manhole base so that a maximum grade adjustment of eight (8) inches is required to bring the manhole frame and cover to final grade.

   Use precast concrete grade rings to adjust manhole frame and cover to final grade.

3. Set precast concrete barrel sections plumb with a $^1/_4$-inch maximum out of plumb tolerance allowed. Seal joints of precast barrel sections with either a rubber "O" ring set in a recess or preformed flexible joint sealant in sufficient quantity to fill 75 percent of the joint cavity. Fill the outside and inside joint with non-shrink mortar and finished flush with the adjoining surfaces. Caulk the inside of any leaking barrel section joint with non-shrink grout to the satisfaction of the Engineer and the City.

4. Allow joints to set for 14 hours before backfilling unless a shorter period is specifically approved by the Engineer or the City.

5. Plug holes in the concrete barrel sections required for handling with a non-shrinking grout or non-shrinking grout in combination with concrete plugs. Finish flush on the inside.

6. Core holes in precast sections to accommodate pipes prior to setting manhole sections in place to prevent jarring which may loosen the mortar joints.

7. Backfill carefully and evenly around manhole sections.

B. Manhole Pipe Connections: Construct manhole pipe connections, including pipe stubs, as specified above. Close or seal pipe stubs for future connections with a gasketed watertight plug.

C. Setting Manhole Frame and Cover: Set manhole covers and frames in a full mortar bed. Utilize precast concrete grade rings, a maximum of eight (8) inches thick, to assure frame and cover are set to the finished grade. Set manhole frame and cover to final grade prior to placement of permanent paving.

SD6.11 TESTS

A. Test each manhole in accordance with Section CIP12- TESTING OF PIPELINES AND MANHOLES. Engineer or the City's representative shall observe each test.

SD6.12 CLEANING

A. Thoroughly clean all new manholes of all silt, debris and foreign matter of any kind, prior to final inspections.

SD6.13 PAYMENT

A. Payment for furnished and installed manholes shall be paid according to the unit price per each in the proper item of the Proposal and Bid Schedule.

B. All work and materials to complete the reinforced concrete pipe including but not limited to excavation, bedding, backfill, connection to pipe, etc. shall be subsidiary to this item.

END OF SECTION

THIS PAGE INTENTIONALLY LEFT BLANK.

TECHNICAL SPECIFICATIONS

SECTION WW1 – CONCRETE MANHOLES (WASTEWATER)

WW1.01 SCOPE OF WORK

A. This specification covers the requirements to install precast concrete manholes, frames and covers, and appurtenances as shown on the Plans and as specified herein.

WW1.02 SUBMITTALS

A. Within 30 days after the Notice to Proceed, the Contractor shall submit to the Engineer or the City for approval, shop drawings, product data, materials of construction, and details of installation shall be submitted in accordance with Section CIP10- SUBMITTALS. Submittals shall include the following: base sections, riser sections, eccentric conical top sections, flat slab tops, grade rings with notarized certificate indicating compliance with ASTM C478, pipe connection to manhole, manhole frame and cover with notarized certificate indicating compliance with ASTM A48, Class 30, method of repair for minor damage to precast concrete sections, manhole lining system.

B. Design Data

1. Precast concrete structures:

a. Six (6) copies of sectional plan(s) and elevations showing dimensions and reinforcing steel placement.

b. Six (6) copies of concrete design mix.

C. Test Reports

1. Precast concrete structures:

a. Six (6) copies of concrete test cylinder reports from an approved testing laboratory certifying conformance with specifications.

WW1.03 REFERENCE STANDARDS

A. American Society for Testing and Materials (ASTM)

1. ASTM A48 - Specification for Gray Iron Castings.

2. ASTM A615 - Standard Specification for Deformed and Plain Billet-Steel Bars for Concrete Reinforcement.

3. ASTM C33 - Specification for Concrete Aggregates.

4. ASTM C150 - Standard Specification for Portland Cement.

5. ASTM C478 - Standard Specification for Precast Reinforced Concrete Manhole Sections.

6. ASTM D4101 - Specification for Propylene Plastic Injection and Extrusion Materials.

B. American Concrete Institute (ACI)

1. ACI 318 - Building Code Requirements for Reinforced Concrete.

2. ACI 350R - Concrete Sanitary Engineering Structures.

C. American Association of State Highway and Transportation Officials (AASHTO)

1. Standard Specifications for Highway, Streets and Bridges.

D. Occupational Safety and Health Administration (OSHA)

E. Where reference is made to one of the above standards, the revision in effect at the time of bid opening shall apply.

WW1.04 QUALITY ASSURANCE

A. All material shall be new and unused.

B. Materials' quality, manufacturing process and finished sections are subject to inspection and approval by Engineer or other City representative. Inspection may be made at place of Manufacture, at work site following delivery, or both.

C. Materials will be examined for compliance with ASTM specifications, these Specifications and approved Manufacturer's drawings. Additional inspection criteria shall include: appearance, dimensions(s), blisters, cracks and soundness.

D. Materials shall be rejected for failure to meet any Specification requirement. Rejection may occur at place of manufacture, at work site, or following installation. Mark for identification rejected materials and remove from work site immediately. Rejected materials shall be replaced at no cost to City.

E. Repair minor damage to precast concrete sections by approved method, if repair is authorized by Engineer or the City.

WW1.05 PRODUCTS

A. Reference to a Manufacturer's name and model or catalog number is for the purpose of establishing the standard of quality and general configuration desired.

B. Like items of materials/equipment shall be the end products of one Manufacturer in order to provide standardization for appearance, operation, maintenance, spare parts and Manufacturer's service.

C. Provide lifting lugs or holes in each precast section for proper handling.

WW1.06 PRECAST CONCRETE MANHOLE SECTIONS

A. Precast concrete base sections, riser sections, transition top sections, flat slab tops and grade rings shall conform to ASTM C478 and meet the following requirements:

1. Bottom slab thickness shall be 12-inches.

2. Top section shall be flat slab with a minimum clear opening of 32 $^{7}/_{8}$-inches diameter.

3. Base, riser and transition top sections shall have tongue and groove joints.

4. Sections shall be cured by an approved method.

5. Precast concrete sections shall be shipped after concrete has attained 3,000 psi compressive strength.

6. Design precast concrete base, riser, transition top, flat slab top and grade ring for a minimum HS-20 loading plus earth load. Calculate earth load with a unit weight of 130 pounds per cubic foot.

7. Mark date of manufacture, name and trademark of Manufacturer on the inside of each precast section.

8. Construct and install precast concrete base as shown on the Plans.

9. Provide integrally cast knock-out panels in precast concrete manhole sections at locations, and with sizes shown on Plans. Knock-out panels shall have no steel reinforcing.

B. Manhole diameter shall be as shown on the Plans, but not less than the diameter of the largest connecting pipe plus two (2) feet.

C. Pipe Sections

Pipe sections shall conform to current specifications for Precast Reinforced Manhole Sections, ASTM Designation C478, with the following additions:

1. Pipe shall be machine made by a process which will provide for uniform placement of zero slump concrete in the form and compaction by mechanical devices which will assure a dense concrete in the finished product.

2. Aggregates for the concrete shall consist of limestone aggregates in the proportion of at least 75% by weight of the total aggregates.

3. Minimum wall thickness for the manhole risers shall be as listed under Wall "B" in the "Class Tables" of ASTM C76 for Class III pipe.

D. Joints

1. Joints shall conform to the joint specifications in ASTM C478, C76, and ASTM C443. All manhole sections, including the bottom section, shall be furnished with "O-ring" type rubber gasket joints. The joints shall be furnished and installed with the bell down to resist groundwater infiltration. All joints shall be sealed with mortar or an approved non-shrink grout on the inside and the outside of the manhole. Grade rings shall be mortared to each other and on the inside and outside to provide a waterproof seal.

E. Manhole Steps

1. Unless specifically approved by the City, manhole steps shall not be provided.

WW1.07 MANHOLE FRAME AND COVER

A. Manhole frames and covers shall be of good quality, strong, tough, even grained cast iron, smooth, free from scale, lumps, blisters, sand holes and defects of any kind which render them unfit for the service for which they are intended. Manhole covers and frame seats shall be machined to a true surface. Castings shall be thoroughly cleaned and subject to hammer inspection. Cast iron shall conform to ASTM A48, Class 30.

B. Manhole covers shall have a diamond pattern, pickholes and the word SEWER as appropriate cast in three (3) inch letters. Manhole frame and covers shall be Neenah Foundry, Western Iron Works, Vulcan Foundry, or equal. Model numbers refer to Western Iron works products:

1. Manhole Frame and cover - WRM-36.

WW1.08 JOINTING PRECAST MANHOLE SECTIONS

A. Seal tongue and groove joints of precast manhole sections with rubber "O"-ring gasket. O-ring gasket shall conform to ASTM C443.

B. Completed joint shall withstand 15 psi internal water pressure without leakage or displacement of gasket or sealant.

WW1.09 PIPE CONNECTIONS TO MANHOLE

A. Connect pipe to manhole in the following ways:

1. Flexible sleeve - Integrally cast sleeve in precast manhole section or install sleeve in a formed or cored opening. Fasten pipe in sleeve with stainless steel clamp(s). Coat stainless steel clamp(s) with bituminous material to protect from corrosion. Flexible sleeve shall be Lock Joint Flexible Manhole Sleeve; Kor-N-Seal connector; PSX Press-Seal Gasket or equal.

2. Compression gasket - Integrally cast compression gasket in precast manhole section. Insert pipe into compression gasket. Compression gasket shall be A-Lok, or equal.

WW1.10 INSTALLATION

A. Manhole Installation

1. Manholes shall be constructed to the dimensions shown on the Plans and as specified herein. Protect all work against flooding and flotation.

2. Place manhole base on a bed of screened gravel eight (8) inches in depth as shown on the Plans. Set manhole base so that a maximum grade adjustment of eight (8) inches is required to bring the manhole frame and cover to final grade.

Use precast concrete grade rings to adjust manhole frame and cover to final grade.

3. Set precast concrete barrel sections plumb with a $^1/_4$-inch maximum out of plumb tolerance allowed. Seal joints of precast barrel sections with either a rubber "O" ring set in a recess or preformed flexible joint sealant in sufficient quantity to fill 75 percent of the joint cavity. Fill the outside and inside joint with non-shrink mortar and finished flush with the adjoining surfaces. Caulk the inside of any leaking barrel section joint with non-shrink grout to the satisfaction of the Engineer and the City.

4. Allow joints to set for 14 hours before backfilling unless a shorter period is specifically approved by the Engineer or the City.

5. Plug holes in the concrete barrel sections required for handling with a non-shrinking grout or non-shrinking grout in combination with concrete plugs. Finish flush on the inside.

6. Core holes in precast sections to accommodate pipes prior to setting manhole sections in place to prevent jarring which may loosen the mortar joints.

7. Backfill carefully and evenly around manhole sections.

B. Manhole Pipe Connections

1. Construct manhole pipe connections, including pipe stubs, as specified above. Close or seal pipe stubs for future connections with a gasketed watertight plug.

C. Setting Manhole Frame and Cover

1. Set manhole covers and frames in a full mortar bed. Utilize precast concrete grade rings, for a maximum adjustment of twelve (12) inches, to assure frame and cover are set to the finished grade. Set manhole frame and cover to final grade prior to placement of permanent paving.

WW1.11 TESTS

A. Test each manhole in accordance with Section CIP12- TESTING OF PIPELINES AND MANHOLES. Engineer or the City's representative shall observe each test.

WW1.12 CLEANING

A. Thoroughly clean all new manholes of all silt, debris and foreign matter of any kind, prior to final inspections.

WW1.13 PAYMENT

A. Payment for furnished and installed manholes shall be paid according to the unit price per each in the proper item of the Proposal and Bid Schedule.

B. All work and materials to complete the reinforced concrete pipe including but not limited to excavation, bedding, backfill, connection to pipe, etc. shall be subsidiary to this item.

END OF SECTION

THIS PAGE INTENTIONALLY LEFT BLANK.

TECHNICAL SPECIFICATIONS

SECTION WW2 – POLYVINYL CHLORIDE (PVC) PIPE-WASTEWATER

WW2.01 SCOPE OF WORK

A. This specification covers the requirements to install and test polyvinyl chloride (PVC) pipe and fittings, including excavation, sheeting, storing, dewatering, pipe laying, jointing, testing, backfilling, and any other work that is required or necessary to complete the installation as shown in the Plans as specified herein, complete as shown on the Plans and as specified herein.

WW2.02 SUBMITTALS

A. Within 30 days of the Notice to Proceed, the Contractor shall submit to the Engineer or the City for approval, technical product literature including the names of the pipe and fittings suppliers, a list of materials to be furnished, shop drawings on required pipes and fittings, certified test reports that the pipe for this Contract was manufactured and tested in accordance with the ASTM Standards specified herein, and all other pertinent data to illustrate conformance to the specification found within.

WW2.03 QUALITY ASSURANCE

A. All PVC pipe and fittings shall be from a single Manufacturer. The Supplier shall be responsible for the provisions of all test requirements specified in ASTM D3034 or ASTM F789 as applicable. In addition, all PVC pipe to be installed under this Contract may be inspected at the plant for compliance with these specifications by an independent testing laboratory provided by the City. The Contractor shall require the Manufacturer's cooperation in these inspections. The cost of plant inspection of all pipe approved for this Contract, plus the cost of inspection of disapproved pipe, will be borne by the Contractor.

B. Inspections of the pipe may also be made by the Engineer or other representatives of the City after delivery. The pipe shall be subject to rejection at any time on account of failure to meet any of the Specification requirements, even though sample pipes may have been accepted as satisfactory at the place of manufacture. Pipe rejected after delivery shall be marked for identification and shall be removed from the job at once.

WW2.04 POLYVINYL CHLORIDE (PVC) WASTEWATER PIPE AND FITTINGS

A. Pipe and fittings shall be Type PSM, PVC SDR 26 with full diameter dimensions and shall conform to ASTM D3034, or Type PS-46 PVC conforming to ASTM F789, for sizes 4 through 15-inch and shall conform to ASTM F679 for sizes 18 through 27-inch. Straight pipe shall be furnished in lengths of not more than 13-feet and wyes shall be furnished in lengths of not more than three (3) feet. Saddle wyes will not be allowed.

B. PVC pipe and fittings shall have bell and spigot push-on joints. The bell shall consist of an integral wall section with a solid cross-section elastomeric gasket securely locked in place to prevent displacement during assembly. Elastomeric gaskets shall conform to ASTM F477.

C. All fittings and accessories shall have bell and/or spigot configurations compatible with the pipe.

D. For Force Main, all pipe shall be C-900, DR-18 pipe or epoxy coated ductile iron encased with brown 8 mil. polyethylene film.

WW2.05 HANDLING AND CUTTING PIPE

A. Pipe and fittings are slightly brittle. Care shall be taken in shipping, handling and laying to avoid damaging the pipe and fittings. Extra care will be necessary during cold weather construction.

B. Any pipe or fitting showing a crack or which has received a blow that may have caused an incipient fracture, even though no such fracture can be seen, shall be marked as rejected and removed at once from the work.

C. All pipe ends shall be square after cutting.

D. While stored, pipe shall be adequately supported from below at not more than three (3) foot intervals to prevent deformation. Pipe shall not be stacked higher than six (6) feet. Pipe and fittings shall be stored in a manner which will keep them at ambient outdoor temperatures and out of direct sunlight. Temporary shading as required to meet this requirement shall be provided. Simple covering of the pipe and fittings which allows temperature buildup when exposed to direct sunlight will not be permitted.

WW2.06 JOINTING POLYVINYL CHLORIDE (PVC) WASTEWATER PIPE AND FITTINGS

A. PVC wastewater pipe and fittings shall be jointed in accordance with the recommendations of the latest ASTM Standards and detailed instructions of the Manufacturer.

B. All manhole connections shall be as shown on the Plans.

WW2.07 INSTALLING POLYVINYL CHLORIDE (PVC) PIPE AND FITTINGS

A. No single piece of pipe shall be laid unless it is generally straight. The centerline of the pipe shall not deviate from a straight line drawn between the centers of the openings at the ends of the pipe by more than $^{1}/_{16}$-inch per foot of length. If a piece of pipe fails to meet this requirement check for straightness, it shall be rejected and removed from the site. Laying instructions of the Manufacturer shall be explicitly followed.

B. Any pipe or fittings discovered to be defective after laying shall be removed and replaced with a sound piece.

C. The Engineer or the City may examine each bell and spigot end to determine whether any preformed joint has been damaged prior to installation. Any pipe having defective joint surfaces shall be rejected, marked as such, and immediately removed from the job site.

D. All pipe shall be sound and clean before laying. When laying is not in progress, including lunch time, the open ends of the pipe shall be closed by watertight plugs or other approved means.

E. Pipe and fittings shall be installed in accordance with the instructions of the Manufacturer, ASTM D2321 and as specified herein. As soon as the excavation is complete to normal grade of the bottom of the trench, bedding shall be placed, compacted and graded to provide firm, uniform and continuous support for the pipe. Bell holes shall be excavated so that only the barrel of the pipe bears upon the bedding. The pipe shall be laid accurately to the lines and grades indicated on the Plans. The specified embedment shall be accurately shaped and trimmed to receive the pipe barrel and each pipe section, when in place, shall have a uniform bearing on the subgrade for the full length of the pipe barrel. Pipe shall not be laid unless the subgrade is free of water and in a satisfactory condition. Adjustments of the pipe to line and grade shall be made by scraping away or filling in with granular material, and not by wedging or blocking up the bell. Blocking under the pipe will not be permitted. The bedding as shown in the details of the Plans, shall be placed evenly on each side of the pipe to mid-diameter and hand tools shall be used to force the bedding under the haunches of the pipe and into the bell holes to give firm continuous support for the pipe. The bedding shall then be placed to 12-inches above the top of the pipe. The initial three (3) feet of backfill above the bedding backfill shall be placed in eight (8) inch layers and carefully compacted. Generally, the compaction shall be done evenly on each side of the pipe and compaction equipment shall not be operated directly over the pipe until sufficient backfill has been placed to ensure that such compaction equipment will not have a damaging effect on the pipe. Equipment used in compacting the initial three (3) feet of backfill shall be approved by the pipe Manufacturer's representative prior to use.

F. Joints shall not be "pulled" or "cramped". Each joint of pipe shall be completed in compliance with Manufacturer’s recommendations.

G. Before any joint is made, the pipe shall be checked to assure that a close joint with the next adjoining pipe has been maintained and that the inverts are matched and conform to the required grade. The pipe shall not be driven down to grade by striking it.

H. Precautions shall be taken to prevent flotation of the pipe in the trench.

I. When moveable trench bracing such as trench boxes, moveable sheeting, shoring or plates are used to support the sides of the trench, care shall be taken in placing and moving the boxes or supporting bracing to prevent movement of the pipe, or disturbance of the pipe bedding and the backfill. Trench boxes, moveable sheeting, shoring or plates shall not be allowed to extend below mid-diameter of the pipe. As trench boxes, moveable sheeting, shoring or plates are moved, screened material shall be placed to fill any voids created and the screened material and backfill shall be re-compacted to provide uniform side support for the pipe.

J. Pipe stubs for manhole connections shall not exceed 3.25-feet in length unless directed otherwise by the Engineer or the City. Install caps where required. When connecting to an existing manhole, the opening for the connection of the wastewater pipe and the manhole shall be cored using an approved coring machine to the dimensions and size required to install the flexible "SEAL BOOT" resilient connector that meets the requirements of ASTM C-923. The connection shall be watertight when complete and meet the requirements of Section WW1- CONCRETE MANHOLES.

K. Wastewater mains shall be installed in straight trenches from manhole to manhole or manhole to cleanout. There will be no curvilinear installations of wastewater mains.

WW2.08 TESTING

A. Testing and cleaning of pipe shall be as specified in Specification Section CIP12- TESTING OF PIPELINES AND MANHOLES.

WW2.09 PAYMENT

A. The wastewater line, complete in place, will be measured for payment in linear feet along the centerline of the pipe actually installed. Measurement shall be through all manholes and no deduction in length will be made for such appurtenances. Installation of the wastewater line will be paid for at the unit contract price per linear foot as provided in the Proposal and Bid Schedule.

B. Payment of the unit contract price for the items of work performed shall be the total compensation for furnishing all labor, materials, tools, testing equipment and incidentals and performing all work that is necessary for the installation of the pipe, fittings, embedment or encasement, and all other appurtenances in accordance with the Plans and the provisions of these specifications.

END OF SECTION

THIS PAGE INTENTIONALLY LEFT BLANK.

TECHNICAL SPECIFICATIONS

SECTION WW3 – CONNECTIONS TO AND WORK ON THE EXISTING WASTEWATER SYSTEM

WW3.01 SCOPE OF WORK

A. This specification covers the requirements to maintain flow in existing sewers, handle existing wastewater flow, construct and maintain all temporary connections and diversions and construct the permanent connections to the new system as shown on the Plans and as directed by the Engineer.

WW3.02 SUBMITTALS

A. None required unless specifically called for in the Plans, details, or requested by the Engineer.

WW3.03 GENERAL

A. The Contractor shall supply all materials, equipment and labor required for plugging existing wastewater lines, all work on existing manholes (including all work and materials required to reshape existing manhole inverts with concrete and connecting new wastewater lines to existing manholes) and all additional work required.

B. Should damage of any kind occur to the existing wastewater line, the Contractor shall at his/her own expense, as part of the work under this Section, make repairs to the satisfaction of the Engineer.

C. The Contractor shall notify the Engineer immediately of any discrepancies in elevations of existing wastewater lines and manholes between those shown on the Plans and those established during construction in order that the Engineer can make the necessary modifications.

D. All new wastewater pipe for connection shall conform to the pipe specifications in Section WW2-POLYVINYL CHLORIDE (PVC) PIPE - WASTEWATER.

WW3.04 HANDLING WASTEWATER FLOWS

A. The Contractor shall provide all labor, equipment and materials necessary to maintain existing flows, including temporary diversions and all pumping of sewage that may be required to prevent backing up of wastewater lines and shall immediately remove all offensive matter at his/her own expense.

B. The Contractor shall not be permitted to overflow, bypass, pump or by any other means convey sewage to any stream, or other water course.

C. All procedures for maintaining flows must meet the approval of the Engineer and the Contractor shall be required to submit to the Engineer, for approval, a detailed written plan of all methods of flow maintenance 10 days in advance of flow interruption.

WW3.05 PAYMENT

A. No separate payment shall be made for work performed in accordance with this section of the specifications, and the cost thereof shall be included in the proper items of the Proposal and Bid Schedule.

END OF SECTION

THIS PAGE INTENTIONALLY LEFT BLANK.

TECHNICAL SPECIFICATIONS

SECTION W1 – DUCTILE IRON PIPE AND FITTINGS

W1.01 SCOPE OF WORK

A. This specification covers the requirements to furnish and install ductile iron pipe and ductile iron pipe fittings including bracing, pipe laying, jointing, testing, blocking, and any other work that is required or necessary to complete the installation as shown on the Plans and as specified herein.

W1.02 SUBMITTALS

A. Within 30 days of the Notice to Proceed, the Contractor shall submit to the Engineer for approval, technical product literature including the name of the pipe and fitting suppliers and a list of materials to be furnished, completely detailed working drawings and schedules of all ductile-iron pipe and fittings required, prior to each shipment of pipe, submit certified test reports that the pipe for this Contract was manufactured and tested in accordance with the ASTM and ANSI/AWWA Standards specified herein.

W1.03 REFERENCE STANDARDS

A. American Society for Testing and Materials (ASTM)

1. ASTM A307 - Standard Specification for Carbon Steel Bolts and Studs 60,000 PSI Tensile Strength.

B. American Water Works Association (AWWA)

1. AWWA C104 - Cement-Mortar Lining for Ductile-Iron Pressure Pipe and Fittings.

2. AWWA C105 - Polyethylene Encasement for Ductile-Iron Piping for Water and Other Liquids.

3. AWWA C110 - Ductile-Iron and Gray-Iron Fittings, 3-inch Through 48-in for Water and Other Liquids.

4. AWWA C111 - Rubber-Gasket Joints for Ductile-Iron Pressure Pipe and Fittings.

5. AWWA C115 - Standard for Flanged Ductile-Iron Pipe with Threaded Flanges.

6. AWWA C151 - Ductile-Iron Pipe, Centrifugally Cast in Metal Molds or Sand-Lined Molds for Water or Other Liquids.

7. AWWA C153 - Ductile-Iron Compact Fittings, 3-inch Through 16-inch for Water and Other Liquids.

8. AWWA C600 - Standard for Installation of Ductile-Iron Water Mains and Their Appurtenances.

9. AWWA C651 - Disinfection Water Mains

C. American National Standards Institute (ANSI)

1. ANSI B16.1 - Cast Iron Pipe Flanges and Flanged Fittings.

D. Where reference is made to one of the above standards, the revision in effect at the time of bid opening shall apply.

W1.04 QUALITY ASSURANCE

A. All ductile-iron pipe and fittings shall be from a single Manufacturer. All ductile-iron pipe to be installed under this Contract may be inspected at the foundry for compliance with these Specifications by an independent testing laboratory provided by the City. The Contractor shall require the Manufacturer's cooperation in these inspections. The cost of foundry inspection of all pipe approved for this Contract, plus the cost of inspection of disapproved pipe will be borne by the Contractor.

B. Inspection of the pipe will be made by the Engineer or other representatives of the City after delivery. The pipe shall be subject to rejection at any time on account of failure to meet any of the Specification requirements, even though pipes may have been accepted as satisfactory at the place of manufacture. Pipe rejected after delivery shall be marked for identification and shall immediately be removed from the job.

W1.05 MATERIALS

A. Ductile iron pipe shall conform to AWWA C151, be manufactured from metal having a minimum tensile strength of 60,000 psi, a minimum yield strength of 42,000 psi, and a minimum elongation of 10 percent (60–42–10), and be provided in the following minimum pressure classes:

1. 12-inch and smaller, Class 350.
2. 14-inch through 20-inch, Class 250.
3. 24-inch, Class 200.
4. 30-inch and larger, Class 150.

B. Ductile iron fittings shall conform to AWWA C110 or C153.

C. All pipe and fittings shall have a bituminous outside coating in accordance with AWWA C151 and C110, respectively. All pipe and fittings shall be cement-mortar lined and seal coated in accordance with AWWA C104. Cement mortar lining shall be double thickness.

D. Ductile iron pipe with push-on or mechanical joints shall be centrifugally cast pipe in accordance with AWWA C150 and C151.

E. Restrained joints shall be restrained push-on joints, TR Flex by U.S. Pipe and Foundry; Lok-Fast by American Cast Iron Pipe Company, or equal. Joints shall be suitable for 250 psi working pressure and be fabricated of heavy section ductile iron casting. Bolts and nuts shall be low carbon steel conforming to ASTM A307, Grade B.

F. Sleeve type couplings shall be of steel and shall be Style 38 by Dresser Manufacturing Division, Smith-Blair or equal. Couplings shall be furnished with black steel bolts and nuts and with pipe stop removed. Gaskets shall be of a material suitable for exposure to liquid within the pipe.

W1.06 POLYETHYLENE ENCASEMENT

A. All buried ductile iron pipe and metallic fittings shall be encased with 8 mil, Type I, Grade E-1, polyethylene film conforming to AWWA C105. Class usage shall be:

1. Class A - Natural Color where exposure to weather (including sunlight) is less than 48 hours total before burial.
2. Class C - Black where exposure to weather (including sunlight) may be more than 48 hours.

B. Exposure to weather shall be kept to a minimum, and in no case shall it exceed 10 days. The Class of polyethylene used shall be approved by the Engineer.

C. Polyethylene encasement shall not be paid for separately, but the cost there of shall be included in he appropriate item of the Proposal and Bid Schedule.

W1.07 LAYING DUCTILE IRON PIPE AND FITTINGS

A. Care shall be taken in loading, transporting and unloading to prevent injury to the pipe, lining or coatings. Pipe or fittings shall not be dropped. All pipe or fittings shall be examined before laying and no piece shall be installed which is found to be defective. Any damage to the pipe linings or coatings shall be repaired as directed by the Engineer. Handling and laying of pipe and fittings shall be in accordance with the Manufacturer's instruction and as specified herein.

B. All pipe and fittings shall be thoroughly cleaned before laying, shall be kept clean until they are used in the work, and when laid, shall conform to the lines and grades required. Pipe shall not be laid unless the subgrade is free of water and in a satisfactory condition. Ductile iron pipe and fittings shall be installed in accordance with the requirements of AWWA C600 except as otherwise provided herein. All piping on this project regardless of size or class shall be placed in the embedment as shown on the detail sheets in the Plans. If any defective pipe is discovered after it has been laid, it shall be removed and replaced with a sound pipe in a satisfactory manner by the Contractor, at his own expense.

C. All pipe shall be sound and clean before laying. When laying is not in progress, including lunchtime, the open ends of the pipe shall be closed by watertight plugs or other approved means. Good alignment shall be preserved in laying. The deflection at joints shall not exceed that recommended by the Manufacturer. Fittings, in addition to those shown on the Plans, shall be provided, if required, for crossing utilities which may be encountered upon opening the trench. Solid sleeves shall be used only where approved by the Engineer and the City.

D. When cutting pipe is required, the cutting shall be done by machine, leaving a smooth cut at right angles to the axis of the pipe. Cut ends of pipe to be joined with a bell shall be beveled to conform to the manufactured spigot end. Cement lining shall be undamaged.

E. Joints shall be protected by eight (8) mil. Polyethylene film prior to placing concrete. Concrete shall be placed against undisturbed material, and shall not cover joints, bolts or nuts, or interfere with the removal of any joint.

W1.08 PUSH-ON JOINTS

A. Push-on joints shall be made in accordance with AWWA C111 and the Manufacturer’s instructions. Pipe shall be laid with bell ends in the direction of trenching. A rubber gasket shall be inserted in the groove of the bell end of the pipe, and the joint surfaces cleaned and lubricated. The plain end of the pipe to be laid shall then be aligned and inserted in the bell of the pipe to which it is to be joined and pushed home with a jack or by other means. After joining the pipe, a metal feeler shall be used to make certain that the rubber gasket is correctly located.

W1.09 MECHANICAL JOINTS

A. Mechanical joints shall be made in accordance with Appendix “A” of AWWA C111 and the Manufacturer's instructions. Thoroughly clean and lubricate the joint surfaces and rubber gasket with soapy water before assembly. Bolts shall be tightened to the specified torque. Under no conditions shall extension wrenches or pipe over the handle of ordinary ratchet wrench be used to secure greater leverage.

W1.10 RESTRAINED JOINTS

A. Restrained joints shall be installed where shown on the Plans. The joint assemblies shall be made in accordance with the Manufacturer's recommendations.

W1.11 SLEEVE TYPE COUPLINGS

A. Couplings shall be installed where shown on the Plans. Couplings shall not be assembled until adjoining push-on joints have been assembled. After installation, apply a heavy bitumastic coating to bolts and nuts.

W1.12 POLYETHYLENE ENCASEMENT

A. The polyethylene encasement shall be installed in accordance with either method specified in AWWA C105.

W1.13 CONCRETE AND BLOCKING

A. 2,500 psi concrete shall be placed for blocking at each change in direction in the pipeline, in such manner as will substantially brace the pipe against undisturbed trench walls. Concrete blocking, made from Type I cement, shall have been in place four (4) days prior to testing the pipeline as hereinafter specified. Test may be made in two (2) days after completion of blocking if Type III cement is used.

B. At all points where wet connections are made to existing lines, the existing lines shall be adequately blocked and the tapping connection fittings shall be supported by blocking up to the spring line with 2,500 psi concrete.

C. Concrete blocking will not be measured or paid for as a separate item but the cost thereof shall be included in the proper items listed in the Proposal and Bid Schedule.

W1.14 CLEANING

A. At the conclusion of the work thoroughly clean all of the new pipelines by flushing with water or other means to remove all dirt, stones, pieces of wood or other material which may have entered during the construction period. If obstructions remain after this cleaning, the obstructions shall be removed.

W1.15 CONNECTIONS AND APPURTENANCES

A. The Contractor shall make the alterations and the necessary connections to existing water mains as shown on the Plans. Such connection shall be made at such time and in a manner approved by the City; in each case, when the work is started, it shall be prosecuted expeditiously and continuously until completed.

B. Fittings, bends, plugs and valves and shall be of standard manufacture and mechanical joint type to fit AWWA pipe specifications in Classes A, B, C and D, unless otherwise shown on the Plans.

C. Payment for fittings and gate valves shall be restrained and shall be made separately under the appropriate bid items listed in the Proposal and Bid Schedule.

W1.16 LEAKAGE TESTING AND STERILIZATION

A. All Ductile Iron Pipe shall be leak tested and sterilized according to Section CIP12 – TESTING OF PIPELINES.

W1.17 PAYMENT

A. The pipeline, complete in place, including cleanup, will be measured for payment in linear feet along the centerline of the pipe actually installed. Measurement shall be through all fittings, specials, valves, etc., and no deduction in length shall be made for such appurtenances. Installation of the pipeline will be paid for at the unit contract price per linear foot as provided in the Proposal and Bid Schedule.

B. Payment of the unit contract price for the items of work performed shall be the total compensation for furnishing all labor, materials, tools, equipment and incidentals and performing all work that is necessary for the installation, testing, and sterilization of the pipe, fittings, connections, blocking, embedment or placing in encasement pipe and all other appurtenances in accordance with the Plans and the provisions of the Specifications.

END OF SECTION

THIS PAGE INTENTIONALLY LEFT BLANK.

SECTION W2 – POLYVINYL CHLORIDE (PVC) PIPE-WATER

W2.01 SCOPE OF WORK

A. This specification covers the requirements to install polyvinyl chloride (PVC) water pipe and ductile iron fittings for the water line, including excavation, sheeting, shoring, dewatering, pipe laying, jointing, testing, backfilling and any other work that is required or necessary to complete the installation as shown on the Plans and as specified herein.

W2.02 SUBMITTALS

A. Within 30 days of the Notice to Proceed, the Contractor shall submit to the Engineer or the City for approval, technical product literature including the name of the pipe and fittings suppliers, a list of materials to be furnished, shop drawings and schedules of all PVC pipe and fittings required, prior to each shipment of pipe, submit certified test reports that the pipe for this Contract was Manufactured and tested in accordance with the ASTM Standards specified herein.

W2.03 QUALITY ASSURANCE

A. All PVC pipe and fittings shall be from a single Manufacturer. The supplier shall be responsible for the provisions of all test requirements specified in ASTM D3034 or ASTM F789 and/or ASTM F758 as applicable. In addition, all PVC pipe to be installed under this Contract may be inspected at the plant for compliance with these specifications by an independent testing laboratory provided by the City. The Contractor shall require the Manufacturer's cooperation in these inspections. The cost of plant inspection of all pipe approved for this Contract, plus the cost of inspection of disapproved pipe, will be borne by the Contractor.

B. Inspections of the pipe may also be made by the Engineer or other representatives of the City after delivery. The pipe shall be subject to rejection at any time on account of failure to meet any of the Specification requirements, even though sample pipes may have been accepted as satisfactory at the place of manufacture. Pipe rejected after delivery shall be marked for identification and shall be removed from the job at once.

W2.04 POLYVINYL CHLORIDE (PVC) PIPE AND FITTINGS

A. Polyvinyl chloride pipe for water lines, unless otherwise specifically shown on the Plans, or approved in writing, shall be AWWA C900 or C909 Class 150 psi with a dimension ratio of 18 (DR-18), for water lines and shall be extruded, be of rubber gasket type, and be furnished in 20-foot nominal laying lengths. All such pipe shall bear a mark denoting approval by the Underwriters' Laboratories of Chicago, Illinois, so that it will be acceptable to the Texas State Fire Insurance Commission for use in fire protection lines without penalty. All joints shall be of the type which provides a recession in the bell for the employment of a single rubber gasket to be placed before the insertion of the succeeding spigot. Each size of polyvinyl chloride pipe shall have the same outside diameter as the corresponding size of cast iron pipe.

B. Fittings shall be ductile iron, mechanical joint or flanged type and shall be Class 250 in accordance with AWWA Specifications C110-77, C-111-80, and C115-75. Flanges shall be faced and drilled in accordance with ASA Standard B16.1, Class 125 unless otherwise shown on the Plans or in the Special Conditions. All fittings shall be tar coated on the outside surface and shall have an interior cement lining with seal coat per AWWA Specifications C104-80 unless otherwise shown or specified.

C. The Contractor shall obtain installation instructions, including support spacing and solvent welding, from the supplying Manufacturer, shall comply with the instructions, and shall meet the requirements of ASTM D-2855, Standard Recommended Practice for making Solvent Cemented Joints with PVC Pipe and Fittings. The PVC solvent cement shall comply with ASTM D-2564 and shall be furnished by the pipe and fitting Manufacturer for the class and type of pipe supplied to the project.

W2.05 HANDLING AND CUTTING PIPE

A. Pipe and fittings are slightly brittle. Care shall be taken in shipping, handling and laying to avoid damaging the pipe and fittings. Extra care will be necessary during cold weather construction.

B. Any pipe or fitting showing a crack or which has received a blow that may have caused an incipient fracture, even though no such fracture can be seen, shall be marked as rejected and removed at once from the work.

C. All pipe ends shall be square after cutting.

D. While stored, pipe shall be adequately supported from below at not more than three (3) foot intervals to prevent deformation. Pipe shall not be stacked higher than six (6) feet. Pipe and fittings shall be stored in a manner which will keep them at ambient outdoor temperatures and out of direct sunlight. Temporary shading as required to meet this requirement shall be provided. Simple covering of the pipe and fittings which allows temperature buildup when exposed to direct sunlight will not be permitted.

W2.06 JOINTING POLYVINYL CHLORIDE (PVC) PIPE AND FITTINGS

A. PVC pipe and fittings shall be jointed in accordance with the recommendations of the latest ASTM Standards and detailed instructions of the Manufacturer.

W2.07 INSTALLING POLYVINYL CHLORIDE (PVC) PIPE AND FITTINGS

A. Unless otherwise specified on the Plans, polyvinyl chloride pipe shall be installed to clear all utility lines and shall have three (3) feet minimum cover. For water lines to be constructed under a future roadway, the cover may be increased to allow for future paving grades. The depth of cover, where shown on the Plans, is that distance from the top of the pipe to the approximate proposed grade line.

B. No single piece of pipe shall be laid unless it is generally straight. The centerline of the pipe shall not deviate from a straight line drawn between the centers of the openings at the ends of the pipe by more than $^{1}/_{16}$-inch per foot of length. If a piece of pipe fails to meet this requirement check for straightness, it shall be rejected and removed from the site. Laying instructions of the Manufacturer shall be explicitly followed.

C. Any pipe or fittings discovered to be defective after laying shall be removed and replaced with a sound piece.

D. The Engineer or the City may examine each bell and spigot end to determine whether any preformed joint has been damaged prior to installation. Any pipe having defective joint surfaces shall be rejected, marked as such, and immediately removed from the job site.

E. All pipe shall be sound and clean before laying. When laying is not in progress, including lunch time, the open ends of the pipe shall be closed by watertight plugs or other approved means. Good alignment shall be preserved in laying.

F. Pipe and fittings shall be installed in accordance with the instructions of the Manufacturer, ASTM D2321 and as specified herein. As soon as the excavation is complete to normal grade of the bottom of the trench, embedment material shall be placed, compacted and graded to provide firm, uniform and continuous support for the pipe. Bell holes shall be excavated so that only the barrel of the pipe bears upon the bedding. The pipe shall be laid accurately to the lines and grades indicated on the Plans. The specified embedment shall be accurately shaped and trimmed to receive the pipe barrel and each pipe section, when in place, shall have a uniform bearing on the subgrade for the full length of the pipe barrel. Pipe shall not be laid unless the subgrade is free of water and in a satisfactory condition. Embedment material shall be placed evenly on each side of the pipe to mid-diameter and hand tools shall be used to force the embedment material under the haunches of the pipe and into the bell holes to give firm continuous support for the pipe. Embedment material shall then be placed to 12-inches above the top of the pipe. Next, the varying depths of select material backfill above the embedment material backfill shall be placed according to the Plan Details and carefully compacted. Generally, the compaction shall be done evenly on each side of the pipe and compaction equipment shall not be operated directly over the pipe until sufficient select material backfill has been placed to ensure that such compaction equipment will not have a damaging effect on the pipe. Equipment used in

compacting the varying depths of select material backfill shall be approved by the pipe Manufacturer's representative prior to use. Adjustments of the pipe to line and grade shall be made by scraping away or filling in with granular material, and not by wedging or blocking up the bell.

G. Perforated PVC Pipe and fittings shall be installed in accordance with the instructions of the Manufacturer, ASTM F758 and as specified herein. As soon as the excavation for the trench is complete to normal grade of the bottom of the trench, geotextile fabric shall be laid and then the pea gravel bedding shall be carefully placed (so not to damage the geotextile fabric) and graded to provide uniform and continuous support for the pipe. Bell holes shall be excavated so that only the barrel of the pipe bears upon the bedding. Before the perforated pipe is laid on the trench, the perforated pipe shall be wrapped around and closed according to the Manufacturer's closure recommendations with the geotextile fabric. The pipe shall be laid accurately to the lines and grades indicated on the Plans. Blocking under the perforated PVC pipe will not be permitted. Pea gravel shall be placed evenly on each side of the pipe to mid-diameter and hand tools shall be used to gently place the pea gravel under the haunches of the pipe and into the bell holes to give firm continuous support for the pipe. Making sure not to damage the geotextile fabric, pea gravel shall then be carefully placed above the top of the perforated pipe varying from two to three (2-3) feet depending on the Plans. Once the remaining pea gravel has been placed, overlap or close the geotextile fabric according to the Manufacturer's recommendations or six (6) inches minimum overlap. Then one (1) foot of topsoil shall be placed over the pea gravel to the ground level with proper grass sodding on top.

H. Joints shall not be "pulled" or "cramped". Each joint of pipe shall be completed in compliance with Manufacturer's recommendations.

I. Before any joint is made, the pipe shall be checked to assure that a close joint with the next adjoining pipe has been maintained and that the inverts are matched and conform to the required grade. The pipe shall not be driven down to grade by striking it.

J. Precautions shall be taken to prevent flotation of the pipe in the trench.

K. When moveable trench bracing such as trench boxes, moveable sheeting, shoring or plates are used to support the sides of the trench, care shall be taken in placing and moving the boxes or supporting bracing to prevent movement of the pipe, or disturbance of the pipe bedding and backfill or embedment material. Trench boxes, moveable sheeting, shoring or plates shall not be allowed to extend below mid-diameter of the pipe. As trench boxes, moveable sheeting, shoring or plates are moved, embedment material shall be placed to fill any voids created and the embedment material and backfill shall be recompacted to provide uniform side support for the pipe.

W2.08 CONCRETE AND BLOCKING

A. 2,500 psi concrete shall be placed for blocking at each change in direction in the pipeline, as shown in the Standard Details and in such manner as will substantially brace the pipe against undisturbed trench walls. In no event shall this quantity of concrete blocking be less than those shown in the Plans. Concrete blocking, made from Type I cement, shall have been in place four (4) days prior to testing the pipeline as hereinafter specified. Tests may be made in two (2) days after completion of blocking if Type III cement is used.

B. At all points where wet connections are made to existing lines, the existing lines shall be adequately blocked and the tapping connection fittings shall be supported by blocking up to the spring line with 2,500 psi concrete.

C. Concrete blocking will not be measured or paid for as a separate item but the cost thereof shall be included in the various items listed in the Proposal and Bid Schedule.

W2.09 TESTING AND ALLOWABLE LEAKAGE

A. All PVC pipe and fittings shall be leak tested and sterilized according to Section CIP12.05- TEST PROCEDURES FOR PRESSURE PIPELINES.

W2.10 PAYMENT

A. The pipeline, complete in place, including cleanup, will be measured for payment in linear feet along the centerline of the pipe actually installed. Measurement shall be through all fittings, specials, valves, etc., and no deduction in length shall be made for such appurtenances. Installation of the pipeline will be paid for at the unit contract price per linear foot as provided in the Proposal and Bid Schedule.

B. Payment of the unit contract price for the items of work performed shall be the total compensation for furnishing all labor, materials, tools, equipment and incidentals and performing all work that is necessary for the installation, testing, and sterilization of the pipe, fittings, connections, blocking, embedment or placing in encasement pipe and all other appurtenances in accordance with the Plans and the provisions of the Specifications.

END OF SECTION

TECHNICAL SPECIFICATIONS

SECTION W3 – VALVES, HYDRANTS AND APPURTENANCES

W3.01 SCOPE OF WORK

A. This specification covers the requirements to provide all buried valves, valves in manholes and underground vaults, hydrants and appurtenances complete with actuators and all accessories as shown on the Plans and as specified herein.

W3.02 SUBMITTALS

A. Within 30 days of the Notice to Proceed, the Contractor shall submit to the Engineer or the City for approval, technical product literature including Manufacturer's literature, illustrations, specifications and engineering data which includes dimensions, size, materials of construction, weight, protection coating, and all other pertinent data to illustrate conformance to the specification found within. The Contractor shall also submit four (4) copies of all certified shop test results specified herein, complete operation and maintenance manuals including all copies of all approved shop drawings, and certificates of compliance where required by referenced standards: For each valve specified to be manufactured and/or installed in accordance with AWWA and other standards, submit an affidavit of compliance with the appropriate standards, including certified results of required tests, and certification of proper installation.

W3.03 REFERENCE STANDARDS

A. Comply with applicable provisions and recommendations of the following, except as otherwise shown or specified.

B. American Water Works Association (AWWA)

1. AWWA C515 - Gate Valves, three (3)-inch through 48-inch NPS, for Water and Sewage Systems.

2. AWWA C502 - Dry-Barrel Fire Hydrants.

3. AWWA C509 - Resilient-Seated Gate Valves, three (3) inch through 12-inch NPS, for Water and Sewage Systems.

C. American National Standards Institute (ANSI)

1. ANSI B16.1 - Cast-Iron Pipe Flanges and Flanged Fittings.

2. ANSI C111 - Rubber-Gasket Joints for Ductile-Iron and Gray-Iron Pressure Pipe and Fittings.

D. American Society for Testing and Materials (ASTM)

1. ASTM A48 - Gray Iron Castings.

2. ASTM A126 - Gray Iron Castings for Valves, Flanges and Pipe Fittings

3. ASTM A153 - Zinc Coating (Hot-Dip) on Iron and Steel Hardware

4. ASTM A276 - Standard Specification for Stainless and Heat Resisting Steel Bars and Shapes.

5. ASTM A536 - Ductile Iron Castings.

E. Steel Structures Painting Council (SSPC)

1. SSPC SP-6 - Commercial Blast Cleaning

F. Where reference is made to one (1) of the above standards, the revision in effect at the time of bid opening shall apply.

W3.04 DELIVERY, STORAGE AND HANDLING

A. Deliver materials to the site to ensure uninterrupted progress of the work.

B. Protect threads and seats from corrosion and damage. Rising stems and exposed stem valves shall be coated with a protective oil film which shall be maintained until time of use.

C. Provide covers for all openings.

1. All valves three (3) inches and larger shall be shipped and stored on site until time of use with wood or plywood covers on each valve end.

2. All valves smaller than three (3) inches shall be shipped and stored as above except that heavy card board covers may be furnished instead of wood.

D. Store equipment to permit easy access for inspection and identification. Any corrosion in evidence at the time of City acceptance shall be removed, or the valve shall be removed from the job.

E. Store all equipment in covered storage off the ground.

W3.05 COORDINATION

A. Review installation procedures under other Sections and coordinate with the work which is related to this Section including buried piping installation and site utilities.

B. Contractor shall coordinate the location and placement of concrete thrust blocks when required.

W3.06 GENERAL

A. All valves shall open counter-clockwise.

B. The use of a Manufacturer's name and/or model or catalog number is for the purpose of establishing the standard of quality and general configuration desired.

C. Valves shall be of the size shown on the Plans or as noted, and as far as possible equipment of the same type shall be identical and from one Manufacturer.

D. Valves shall have the name of the maker, nominal size, flow directional arrows, working pressure for which they are designed and standard to which they are manufactured cast in raised letters on some appropriate part of the body.

E. Unless otherwise noted, valves shall have a minimum working pressure of 200 psi or be of the same working pressure as the pipe they connect to, whichever is higher, and suitable for the pressures noted where they are installed.

F. Valves shall be of the same nominal diameter as the pipe or fittings they are connected to. Except as otherwise noted, joints shall be mechanical joints, with joint restraint where the adjacent piping is required to be restrained.

G. Valves shall be constructed for buried service.

W3.07 VALVE BOXES

A. All gate valves shall be provided with extension shafts (where the operating nut is greater than five (5) feet below grade), operating nuts and valve boxes as follows:

1. Extension shafts shall be steel and the operating nut shall be two (2) inches square. Shafts shall be designed to provide a factor of safety of not less than four (4). Operating nuts shall be pinned to the shafts.

2. Valve boxes shall be a heavy-pattern cast iron, three (3) piece, telescoping type box with dome base suitable for installation on the buried valves. Inside diameter shall be at least 5¼-inches. Barrel length shall be adapted to the depth of cover, with a lap of at least six (6) inches when in the most extended position. Covers shall be cast iron with integrally-cast direction-to-open arrow and "WATER" shall be cast in the cover when used on a water line or "SEWER" when used on a wastewater force main. Aluminum or plastic are not acceptable. A means of lateral support for the valve extension shafts shall be provided in the top portion of the valve box. The valve box lid shall be furnished with a pentagon-head bolt for locking.

3. The upper section of each box shall have a bottom flange of sufficient bearing area to prevent settling. The bottom of the lower section shall enclose the stuffing box and operating nut of the valve and shall be oval.

4. An approved operating key or wrench shall be provided.

5. All fasteners shall be Type 304 stainless steel.

W3.08 RESILIENT SEATED GATE VALVES

A. Valves shall be manufactured in accordance with AWWA C509.

Acceptable Gate Valves are:

1. American Flow Control – Series 2500
2. Mueller – 2360 Series
3. Clow

B. Valves shall be provided with a minimum of two (2) O-ring stem seals.

C. Bonnet and gland bolts and nuts shall be either fabricated from a low alloy-steel for corrosion resistance or electroplated with zinc or cadmium. The hot-dip process in accordance with ASTM A153 is not acceptable.

D. Wedges shall be totally encapsulated with rubber.

E. Units shall be, in addition, UL and FM approved.

F. Resilient wedge gate valves shall be furnished and installed in sizes and shall be manufactured in accordance with the latest AWWA C-509 and cast iron shall conform to the latest ASTM A-126 standards. Gate valves furnished under these specifications shall be of the solid wedge, resilient seat type with cast iron/ductile iron body and bronze stem designed for 250 pounds per square inch working pressure. All gate valves shall be tested hydrostatically to 400 pounds per square inch. Gate valves shall meet the latest AWWA standard specifications (C-509).

G. The seat shall be made of Styrene Butadiene rubber and provide a positive water tight seal. The seat shall be permanently bonded or mechanically attached to the wedge with stainless steel screws. If bonded, ASTM P-429 requirements shall be followed. Non-rising stem gate valves shall be equipped with "O" ring type packing gland consisting of at least two (2) "O" rings. The thrust collar shall work in an "O" ring seal lubricant reservoir or against bearings or washers, above and below constructed of Delrin or approved equal material. Gate valve stems, shall be fabricated from solid bronze rod having a tensile strength of not less than 60,000 pounds per square inch, and a minimum yield strength of 30,000 pounds per square inch.

H. Cast iron body shall be of iron with an even grain and shall possess a tensile strength of not less than 32,000 pounds per square inch. All bronze castings, except the stem, shall have a tensile strength of not less than 30,000 pounds per square inch. The entire internal valve body surfaces shall be coated with a factory applied two (2) component epoxy system or approved equal. The seating surface shall be machined or otherwise constructed to provide a smooth, even surface for the resilient seat. All valves shall open left (counter clockwise) and have a two (2) inch square wrench nut unless specified otherwise.

W3.09 TAPPING SLEEVES AND TAPPING VALVES

A. Tapping sleeves shall be of cast iron epoxy coated, designated for working pressure not less than 200 psi. Armored end gaskets shall be provided for the full area of the sleeve flanges. Sleeves shall be as manufactured by A.P. Smith Division of U.S. Pipe, Mueller, Clow, or equal. Nuts and bolts shall be Type 304 stainless steel.

B. Size-on-Size tapping sleeve shall be ductile iron or cast iron.

C. Tapping valves shall conform to the requirements specified above for gate valves except that one (1) end shall be flanged and one (1) mechanical. Tapping valves shall be provided with an oversized opening to permit the use of full size cutters. Tapping valves shall be Ford B81-777 or equal.

W3.10 CHECK VALVES

A. Controlled Closing Swing Check Valves (lever & weight)

1. Check valves shall be of the controlled closing swing type. The controlled closing swing check valves shall be guaranteed to operate under severe conditions as check valves. The valve shall be designed to open smoothly, provide full pipe line flow, permit minimum head loss and close at a controlled rate of speed for the final predetermined portion of its stroke. All bolts and nuts used in the assembly shall be steel, commercial.

2. The valve body shall be Cast Iron ASTM A126-B/ductile iron ASTM A536. The disc arm and chamber level shall be of heavy steel construction and keyed to the hinge shaft. The hinge shaft shall be of 18-8 stainless steel and of adequate diameter to withstand a complete hydraulic unbalance pressure of 125 psi on the valve disc. A single cushioning device mounted on the external side of the valve shall control the valve closure by way of the interchange of oil to and from an oil reservoir. The use of air or gas pressurized oil reservoir shall not be permitted. The oil plunger assembly shall be rigidly attached to the valve body by shoulder bolts or dowel pins to prevent fretting.

3. The Manufacturer, if required by the Engineer or the City, shall submit design calculations of principle component stresses to substantiate the integrity of the valve for the working pressure involved.

4. The valve when closed shall be tight seating by way of a resilient replaceable seat against a bronze seat ring in the body.

5. Valves shall be as manufactured by GA Industries or Series 6000 as manufactured by APCO. The City reserves the right to inspect all valves before shipment is made. Any failure of valves to operate satisfactorily during the first year of installation due to faulty workmanship or defective material shall be replaced and made good by the Manufacturer. Under these specifications, any valve stuffing box that leaks for any reason or because of excessive wear or deterioration of packing, shall be reason for classification as defective material.

B. Slanted / Tilted Check Valves

1. Slanted or tilted check valves shall be furnished and installed where shown on the Plans.

2. The body of the valve shall be ductile iron or cast iron with access ports to the disc. The disc shall be cast iron. The seat and disc rings shall be bronze. Pivot pins and bushings shall be bronze or stainless steel. The valve shall include a localized indicator of the position of the valve.

3. The valves shall include a top mounted oil dash pot to prevent slamming of the disc. The dash pot shall control the last 10% of closure of the disc. The speed of closure within this 10% shall be adjustable.

4. Valves shall be APCO Slanting Disc, Valmatic or Golden Anderson Tilted Disc or approved equal.

W3.11 FLANGES

A. Flanges shall be cast solid and faced accurately at right angles to the axis of the casting. Dimensions and drilling of flanges shall be in accordance with the American Standard Association for a working pressure of 125 pounds per square inch. Special drilling shall be provided where necessary.

W3.12 FIRE HYDRANTS

A. Fire hydrants shall be dry-barrel type conforming to the requirements of the latest revision of AWWA C502. Hydrants shall be designed such that the hydrant valve closes with line pressure preventing loss of water and consequent flooding in the event of traffic damage.

B. Hydrants shall have six (6)-inch mechanical joint inlet connections, two 2½-inch hose connections and one $4^1/_2$-inch pumper connection. Threads for the hose and pumper connections shall be in accordance with National Standard Thread. Hydrants shall be according to Manufacturer's standard pattern. Hydrants shall be equipped with "O" ring packing. Each nozzle cap shall be provided with a Buna-N rubber washer.

C. Hydrants shall be so arranged that the direction of outlets may be turned 90 degrees without interference with the drip mechanism or obstructing the discharge from any outlet. The body of the hydrant shall be equipped with a breakable flange, or breakable cast iron flange bolts, just above the grade line.

D. A bronze or rustproof steel nut and check nut shall be provided to hold the main hydrant valve on its stem.

E. Hydrant valve opening shall have an area at least equal to that area of a $4^1/_2$-inch minimum diameter circle and be obstructed only by the valve rod. Each hydrant shall be able to deliver 500 gallons minimum through its two 2½-inch hose nozzles when opened together with a loss of not more than two (2) psi in the hydrant.

F. Hydrants shall be designed for installation in a trench that will provide minimum cover as noted on Plans and for the flange to be 3 $^1/_2$-inches above ground surface. Hydrant extensions shall be as manufactured by the company furnishing the hydrants and of a style appropriate for the hydrants as furnished.

G. Hydrants shall be provided with an automatic and positively operating, non-corrodible drain or drip valve so

as to drain the hydrant completely when the main valve is shut. A drain valve operating by springs or gravity is not acceptable.

H. Operating stems whose threads are located in the barrel or waterway shall be of manganese bronze, everdur, or other high-quality non-corrodible metal, and all working parts in the waterway shall be bronze to bronze.

I. Hydrants shall open by turning operating nut to left (counter-clockwise) and shall be marked with a raised arrow and the word "open" to indicate the direction to turn stem to open hydrant.

J. Hydrants shall be furnished with caps, double galvanized steel hose cap chain, galvanized steel pumper hose cap chain, a galvanized steel chain holder and any other hooks and/or appurtenances required for proper use.

K. Hydrant operating nut shall be AWWA Standard pentagonal type measuring 1½-inch point to flat.

L. Hydrants shall be hydrostatically tested as specified in AWWA C502.

M. Hydrants shall be of the following:

1. Kennedy – K81

3. American Darling – B84B

2. Clow Medallion

N. All iron work to be set below ground, after being thoroughly cleaned, shall be painted with two (2) coats of asphalt varnish specified in AWWA C502. Iron work to be left above ground shall be factory primed and painted silver using a high grade enamel paint of quality and color to correspond to the present standard of the City.

O. Fire hydrants shall be installed on the same side of the street or roadway as the water main and shall be installed plumb and true.

P. Heel and thrust blocks shall be placed in undisturbed soil as shown in the details of the Plans.

Q. Double blue reflector “HYE – LITES” brand as manufactured by pavement markers ink shall be installed at the centerline of the street or roadway perpendicular to the hydrant.

W3.13 CORPORATION STOPS

A. Corporation stops shall be brass, not less than 1-inch in diameter and shall be installed where shown, specified or required.

B. Provide corporation stops as manufactured by the following:

1. Ford Company

W3.14 COMBINATION AIR-VACUUM RELIEF VALVES

A. The air-vacuum release valves shall be installed as shown on the Plans. The valve body shall be of cast iron ASTM A126-B; the floats, float guide, and stem shall be of Type 316 stainless steel. The resilient seat shall be of Buna N. The valve shall be suitable for 150 psig working pressure. Valve shall have standard NPT inlets and outlet ports with diameters as indicated on the Plans. Valve shall be Model 200A Series by APCO Valve and Primer Corporation, Schaumburg, IL, or approved equal.

W3.15 SURFACE PREPARATION AND SHOP COATINGS

A. The interior ferrous metal surfaces, except finished or bearing surfaces, shall be blast cleaned in accordance with SSPC SP-6 and painted with two (2) coats of an approved two (2) component coal tar

epoxy coating specifically formulated for potable water use. The coating used must appear on the current edition of the United States Environmental Protection Agency's list entitled "Accepted Categories and Subcategories of Coatings, Liners and Paints for Potable Water Usage."

B. Exterior ferrous metal surfaces of all buried valves and hydrants shall be blast cleaned in accordance with SSPC SP-6 and given two (2) shop coats of a heavy coat tar enamel or an approved two (2) component coat tar epoxy paint.

W3.16 INSPECTION AND PREPARATION

A. During installation of all valves and appurtenances, the Contractor shall verify that all items are clean, free of defects in material and workmanship and function properly.

B. All valves shall be closed and kept closed until otherwise directed by the Engineer or the City.

W3.17 INSTALLATION OF BURIED VALVES AND VALVE BOXES

A. Buried valves shall be cleaned and manually operated before installation. Buried valves and valve boxes shall be set with the stem vertically aligned in the center of the valve box. Valves shall be set on a firm foundation and supported by tamping pipe bedding material under the sides of the valve. The valve box shall be supported during backfilling and maintained in vertical alignment with the top flush with finish grade. The valve box shall be set so as not to transmit traffic loads to the valve.

B. Before backfilling, all exposed portions of any bolts shall be coated with two (2) coats of bituminous paint.

W3.18 INSTALLATION OF TAPPING SLEEVES AND VALVES

A. The City of Georgetown shall be contacted and their permission granted prior to tapping a line. The required procedures and time table shall be followed exactly.

B. Installation shall be made under pressure and flow shall be maintained. The diameters of the tap shall be a minimum of $^{1}/_{4}$-inch less than the inside diameter of the branch line.

C. The entire operation shall be conducted by workers experienced in the installation of tapping sleeves and valves. The tapping machine shall be furnished by the Contractor.

D. Determine the location of the line to be tapped to confirm that the proposed location will be satisfactory and that no interference will be encountered such as joints or fittings. No tap or sleeve will be made closer than three (3) feet from a pipe joint.

E. A tapping sleeve and valve with boxes shall be set squarely centered on the line to be tapped. Adequate support shall be provided under the sleeve and valve during the tapping operation. Thrust blocks or other permanent restraint acceptable to the Engineer and the City shall be provided behind all tapping sleeves. Proper tamping of supporting pipe bedding material around and under the valve and sleeve is mandatory for buried installations.

F. After completing the tap, the valve shall be flushed to ensure that the valve seat is clean. All proper regulatory procedures (including disinfection) shall be followed exactly.

W3.19 INSTALLATION OF FIRE HYDRANTS

A. Fire hydrants shall be set at the locations as shown on the Plans and bedded on a firm foundation. Hydrants and connecting pipe shall have at least the same depth of cover as the distributing pipe. A drainage pit as detailed on the Plans shall be filled with ¾-inch washed rock gravel and compacted. The hydrants shall be set upon a slab of concrete not less than four (4)-inches thick and 15-inches square. During backfilling, additional screened gravel shall be brought up around and six (6) inches over the drain port. Each hydrant shall be set in true vertical alignment and properly braced.

B. 2,500 psi concrete thrust blocks shall be placed between the back of the hydrant inlet and undisturbed soil at the end of the trench. Minimum bearing area shall be as shown on the Plans. Eight (8) mil. Poyethlene film shall be placed around the hydrant elbow before placing concrete. CARE SHALL BE TAKEN TO ENSURE THAT CONCRETE DOES NOT PLUG THE DRAIN PORTS.

C. All connections from the main to the fire hydrants shall be anchoring mechanical joints designed to prevent movement due to thrust or pressure.

D. The hydrant shall be tied to the pipe with suitable rods or clamps, and shall be coated with Koppers 300 or approved equal at a minimum of 8 mil. thick. Bolts shall have a zinc bolt cover per AWWA. Hydrant paint shall be touched up as required after installation.

E. Fire hydrants shall be factory primed and painted silver using a high grade enamel.

F. Fire sprinkler lines shall be protected by a reduced pressure zone (RPZ). All fire lines shall be ductile iron pipe. All private fire lines shall be separated by double detecta check.

W3.20 FIELD TESTS AND ADJUSTMENTS

A. Conduct a functional field test of each valve, including actuators and valve control equipment, in presence of Engineer or the Representative of the City to demonstrate that each part and all components together function correctly. All testing equipment required shall be provided by the Contractor at his/her sole expense.

W3.21 PAYMENT

A. Gate valves, tapping sleeves and tapping valves, fire hydrants, and air and vacuum relief valves complete in place as shown on the Plans and as specified, will be paid for at the unit contract price per each as provided in the Proposal and Bid Schedule.

B. The unit price per each installation shall be the total compensation for furnishing all labor, materials, tools, equipment and incidentals necessary to complete the work including excavation, base blocking, disposal of surplus materials and backfill in conformance with the Plans and these specifications. The six (6) inch connection pipe, six (6) inch gate valve, test station, concrete collar, thrust block, drain pit, concrete pad, rods, bolts, paint, protective coatings, and fittings for fire hydrants shall not be paid for separately.

C. Fire hydrants shall be furnished with the proper length of barrel to comply with these specifications. Barrel extensions will not be measured and paid for separately.

D. No separate payment shall be made for work performed in accordance with this specification, other than that listed in Parts A-C of this subsection, and the cost thereof shall be included in the proper items of the Proposal and Bid Schedule.

END OF SECTION

TECHNICAL SPECIFICATIONS

SECTION W4 – ENCASEMENT PIPE

W4.01 SCOPE OF WORK

A. This specification covers the requirements for furnishing and installing encasement pipe complete in place including any required spacers and end plugs as shown on the plans and specified herein.

W4.02 SUBMITTALS

A. Within 30 days after the Notice to Proceed, the Contractor shall submit to the Engineer for approval, technical product literature including type and Manufacturer of pipe, spacers, and end plugs, and all other pertinent data to illustrate conformance to the specification found within.

W4.03 GENERAL

A. Where pipe is required to be installed under highways, streets, or other facilities, construction shall be made in such a manner that will not interfere with the operation of the street, highway, or other facility, and shall not weaken or damage any embankment or structure.

B. All carrier pipe shall be laid to the required line and grade within the specified limits through the encasement pipe. Carrier pipe shall be handled and placed in the encasement pipe by use of proper skids, wedges, guide fails or other approved means. Care shall be taken that once the pipe is in place to line and grade, it shall not be disturbed or become displaced. All carrier pipe shall have restrained joints.

W4.04 MATERIALS

A. Encasement pipe shall be smooth steel 35,000 psi yield strength with thickness according to the following table:

Carrier Size	Minimum Encasement Steel Casing Size	Minimum Casing Thickness
(Inner Diameter)	(Inner Diameter)	(Inches)
4"	14"	0.2500
6"	16"	0.2500
8"	18"	0.2500
10"	20"	0.3125
12"	24"	0.3175
14"	24"	0.375
16"	30"	0.4375
18"	30"	0.4375
20"	36"	0.500
24"	42"	0.500
27"	42"	0.500
30"	48"	0.500
33"	48"	0.500
36"	54"	0.500
39"	60"	0.500
42"	60"	0.500

B. Casing spacers shall be bolt-on style with a shell made in two (2) sections of Heavy T-304 stainless steel. Connecting flanges shall be ribbed for extra strength Casing spacers shall have runners made of ultra high molecular weight polymer, with a minimum height of two (2) inches. Wedges shall not be used between the top of the carrier pipe and the inside of the easement pipe. Casings spacers shall have a minimum of one (1) inch clear distance between the runners on top of the casing spacers and the inside of the encasement pipe. Prior to inserting the carrier pipe, all water shall be pumped out of the encasement pipe to at least a point where no more than two (2) inches of water remains. Spacers shall be required within at least three (3) feet from both openings of the encasement pipe and spaced no greater than six (6) feet through out the encasement pipe. Casing spacers will not be paid for directly but shall be considered subsidiary to the bid item of encasement pipe. . Casing spacers shall be made by Cascade Waterworks MFG Company or approve equal.

C. End Plugs shall be provided as required and as specified by the pipe manufacturer.

W4.05 PAYMENT

A. Separate payment will be made for Steel Encasement Pipe per linear foot as called for on the Plans and set forth in the Proposal and Bid Schedule.

B. All costs incurred for furnishing and installing encasement pipe shall include all labor, materials, tools, equipment and incidentals necessary to perform all work or whatever nature required to complete the specific operation.

END OF SECTION

© 2023 CDM Smith
All Rights Reserved

SECTION 011000 - SUMMARY

PART 1 - GENERAL

1.1 RELATED DOCUMENTS

A. Drawings and general provisions of the Contract, including General and Supplementary Conditions and other Division 01 Specification Sections, apply to this Section.

1.2 SUMMARY

A. Section Includes:

1. Project information.
2. Specification and Drawing conventions.

B. Related Requirements:

1. Section 015000 "Temporary Facilities and Controls" for limitations and procedures governing temporary use of Owner's facilities.
2. Section 017300 “Execution” for coordination of Owner-installed products.

1.3 DEFINITIONS

A. Work Package: A group of specifications, drawings, and schedules prepared by the design team to describe a portion of the Project Work for pricing, permitting, and construction.

1.4 PROJECT INFORMATION

A. Project Identification: Cedar Breaks and D B Wood Lift Stations, Engineer Project No. 2048-272644.

1. Project Location: Two project sites; one off Cedar Breaks Road (2,000 feet west of the intersection of D B Wood Road) and other site off D B Wood Road (just North of the Middle Fork of the San Gabriel River).
2. City of Georgetown, Georgetown Municipal Court, Purchasing Department, at 510 W. 9th Street, Georgetown, Texas 78626.

B. Owner: City of Georgetown

C. Engineer: CDM Smith, Inc., Prominent Pointe I, 8310-1 N. Capital of Texas Hwy., Suite 250, Austin, TX 78731 .

D. Engineer's Consultants: Engineer has retained the following design professionals who have prepared designated portions of the Contract Documents:

1. Geotechnical Engineer: Terracon Consultant, Inc.

E. Web-Based Project Software: Project software will be used for purposes of managing communication and documents during the construction stage.

1. See Section 013100 "Project Management and Coordination." for requirements for using web-based Project software.

1.5 WORK COVERED BY CONTRACT DOCUMENTS

A. The Work of Project is defined by the Contract Documents and includes, but is not limited to, the following:

1. The project consists of furnishing, installing, and providing all labor and materials required for construction of the Cedar Breaks and D B Wood Lift Stations and other Work indicated in the Contract Documents.

B. Type of Contract:

1. Project will be constructed under a single prime contract.

1.6 PHASED CONSTRUCTION

A. Construct the Work phases, with each phase substantially complete as indicated on Drawings.

B. Before commencing Work of each phase, submit an updated copy of Contractor's construction schedule, showing the sequence, commencement, and completion dates**,** and move-out and -in dates of Owner's personnel for all phases of the Work.

1.7 WORK PERFORMED BY OWNER

A. Cooperate fully with Owner, so work may be carried out smoothly, without interfering with or delaying Work under this Contract or work by Owner. Coordinate the Work of this Contract with work performed by Owner.

B. Preceding Work: Owner will perform the following construction operations at Project site. Those operations are scheduled to be substantially complete before Work under this Contract begins.

1. Construction of the small portion of the driveway at D B Wood Lift Station withing the existing D B Wood roadway right-of-way will be constructed by others (D B Wood roadway improvement project contractor).

C. Concurrent Work: Owner will perform the following construction operations at Project site. Those operations will be conducted simultaneously with Work under this Contract.

1. The construction of gravity sewer and force main pipelines that are outside the limit of work of this contract and connect to the pipeline work in this contract may be performed simultaneously by others.

1.8 WORK UNDER OWNER'S SEPARATE CONTRACTS

A. Work with Separate Contractors: Cooperate fully with Owner's separate contractors, so work on those contracts may be carried out smoothly, without interfering with or delaying Work under this Contract or other contracts. Coordinate the Work of this Contract with work performed under Owner's separate contracts.

B. Preceding Work: Owner will award separate contract(s) for the following construction operations at Project site. Those operations may be substantially complete or may be partially conducted simultaneously with Work under this Contract.

C. Future Work Not Part of this Contract: The Contract Documents include requirements that will allow Owner to carry out future work following completion of this Project; provide for the following future work:

1. Connection to (future) gravity and force main to the lift station yard piping

1.9 CONTRACTOR'S USE OF SITE AND PREMISES

A. Unrestricted Use of Site: Contractor shall have full use of Project site for construction operations during construction period. Contractor's use of Project site is limited only by Owner's right to perform work or to retain other contractors on portions of Project.

B. Limits on Use of Site: Limit use of Project site to areas within the Contract limits indicated. Do not disturb portions of Project site beyond areas in which the Work is indicated.

1.10 WORK RESTRICTIONS

A. Comply with restrictions on construction operations.

1. Comply with limitations on use of public streets, work on public streets, rights of way, and other requirements of authorities having jurisdiction.

1.11 SPECIFICATION AND DRAWING CONVENTIONS

A. Specification Content: The Specifications use certain conventions for the style of language and the intended meaning of certain terms, words, and phrases when used in particular situations. These conventions are as follows:

1. Imperative mood and streamlined language are generally used in the Specifications. The words "shall," "shall be," or "shall comply with," depending on the context, are implied where a colon (:) is used within a sentence or phrase.
2. Text Color: Text used in the Specifications, including units of measure, manufacturer and product names, and other text may appear in multiple colors or underlined as part of a hyperlink; no emphasis is implied by text with these characteristics.
3. Hypertext: Text used in the Specifications may contain hyperlinks. Hyperlinks may allow for access to linked information that is not residing in the Specifications. Unless otherwise indicated, linked information is not part of the Contract Documents.

4. Specification requirements are to be performed by Contractor unless specifically stated otherwise.

B. Division 00 Contracting Requirements: General provisions of the Contract, including General and Supplementary Conditions, apply to all Sections of the Specifications.

C. Division 01 General Requirements: Requirements of Sections in Division 01 apply to the Work of all Sections in the Specifications.

D. Drawing Coordination: Requirements for materials and products identified on Drawings are described in detail in the Specifications. One or more of the following are used on Drawings to identify materials and products:

1. Terminology: Materials and products are identified by the typical generic terms used in the individual Specifications Sections.
2. Abbreviations: Materials and products are identified by abbreviations scheduled on Drawings and published as part of the U.S. National CAD Standard.

PART 2 - PRODUCTS (NOT USED)

PART 3 - EXECUTION (NOT USED)

END OF SECTION 011000

© 2023 CDM Smith
All Rights Reserved

SECTION 011716 - EXISTING UTILITIES

PART 1 - GENERAL

1.1 RELATED DOCUMENTS

A. Drawings and general provisions of the Contract, including General and Supplementary Conditions and other Division 01 Specification Sections, apply to this Section.

1.2 SUMMARY

A. Section includes responsibilities for utility properties and service.
   1. Subsurface investigations performed by Terracon Consulting indicating:
      a. Subsurface conditions at various locations at the site.
      b. Presented in Boring Logs.
   2. Existing ground profiles shown on the Plans: plotted from field surveys and existing Drawings.

1.3 CONTRACTOR ACKNOWLEDGEMENTS:

A. Contractor is satisfied as to nature and location of the Work; general and local conditions, particularly those bearing upon availability of transportation, disposal, handling and storage of materials, availability of labor, water, electric power, roads, and uncertainties of weather, river/stream stages, or similar physical conditions at the site; conformation and conditions of the ground; character of equipment and facilities needed preliminary to and during the prosecution of the Work; and all other matters which can in any way affect the Work or the cost thereof under this Contract.

B. Contractor is further satisfied as to character, quality, and quantity of surface and subsurface materials to be encountered from inspecting the site, as well as from information presented herein as a part of these Contract Documents. Any failure to acquaint themself with available information will not relieve Contractor from responsibility for properly estimating the difficulty or cost of successfully performing the Work. Neither Owner nor Engineer assumes responsibility for any conclusion or interpretation made by Contractor on the basis of the information made available by Owner or Engineer.

1.4 RESPONSIBILITY FOR UTILITY PROPERTIES AND SERVICE

A. Known utilities and structures adjacent to or encountered in the Work are shown on Drawings. Locations shown are taken from existing records and the best information available from existing plans; however, it is expected that there may be some discrepancies and omissions in the locations and quantities of utilities and structures shown. Those shown are for the

convenience of Contractor only, and no responsibility is assumed by either Owner or Engineer for their accuracy or completeness.

B. Neither Owner nor his officers or agents shall be responsible to Contractor for damages as a result of Contractor's failure to protect utilities encountered in the Work.

C. Provide unobstructed access to fire hydrants, underground conduit, manholes, and water or gas valve boxes at all times.

D. Where Contractor's operations could cause damage which might result in considerable expense, loss, and inconvenience when operations are adjacent to or near railway, telegraph, telephone, television, power, oil, gas, water, sewer, irrigation, or other systems, do not commence operations until making all arrangements necessary for protection of these utilities and services.

E. Notify utility offices that are affected by construction operation at least five days in advance of commencing construction operations. Do not expose any utility without first obtaining permission from the affected agency. Once permission has been granted, locate and, if necessary, expose and provide temporary support for existing underground utilities in advance of operations.

F. Be solely and directly responsible to owners and operators of such utility properties for any damage, injury, expense, loss, inconvenience, delay, suits, actions, or claims of any character brought because of any injuries or damage that may result from construction operations under this Contract.

G. In the event of interruption to domestic water, sewer, storm drain, or other utility services as a result of accidental breakage due to construction operations, promptly notify proper authority and cooperate with said authority in restoration of service as promptly as possible and bear all costs of repair. In no event shall interruption of any water or utility service be allowed unless prior approval is granted by utility owner.

H. Replace other existing utilities or structures removed or damaged during construction, unless otherwise provided for in these Contract Documents.

I. Where existing utility lines or structures are so located as to physically conflict with permanent structures to be constructed under this Contract, the conflicting utility line or structure shall be permanently relocated. Such relocations shall be considered as required by this Contract.

J. Give immediate notice to Engineer, Owner and owner of the utility (where applicable) when a physical conflict is determined to exist. Any delays resulting from required relocations of utilities are the responsibility of Contractor.

K. Where existing utility lines or structures are so located as to interfere with Contractor's prosecution of the Work, but do not physically conflict with completed manholes or other permanent structures to be constructed under this Contract, any modification, alteration, or relocation of interfering utility, either permanent or temporary, shall be accomplished at expense of Contractor.

L. Give immediate notice to Engineer and Owner of the utility when an interference is determined to exist and obtain approval to relocate such utility or to discontinue service from Engineer and utility owner. Utility owner shall have the right to do all work required to discontinue, relocate, and replace interfering utilities and charge Contractor for related costs. When approved by Engineer and utility owner, work required to discontinue, relocate, and replace interfering utilities may be done by, or arranged for, by Contractor. All such discontinuance, relocation, and replacement shall be accomplished in accordance with all requirements of utility owner.

M. When notified by Contractor that an interference or conflict has been determined to exist, Engineer will determine whether such interference shall be considered as required by construction or as incidental to construction.

1.5 INTERFERING STRUCTURES

A. Take necessary precautions to prevent damage to existing structures whether on surface, aboveground, or underground. An attempt has been made to show major structures on Drawings. While information has been compiled from best available sources, its completeness and accuracy cannot be guaranteed, and it is presented as a guide to avoid known possible difficulties.

B. Protect existing structures from damage, whether or not they lie within the right of way or the limits of the easements obtained by Owner. Where existing structures must be removed to properly conduct the Work, or are damaged during the Work, they shall be restored by Contractor's to at least their original condition and to satisfaction of Engineer.

C. Contractor may, with approval of Engineer and without additional compensation, remove and replace in a condition as good as or better than original, any small interfering structures such as fences and signposts that interfere with Contractor's operations.

1.6 FIELD RELOCATION

A. During the progress of the Work, minor relocations of the work may be necessary. Such relocations shall be made only by direction of Owner or Engineer. If existing structures are encountered that will prevent construction as shown, notify Owner or Engineer before continuing with the Work in order that Engineer may make such field revisions as necessary to avoid conflict with the existing structures. If Contractor fails to notify Owner or Engineer when an existing structure is encountered and proceeds with the Work despite this interference, Contractor shall be responsible for any damage that may occur.

1.7 LAND MONUMENTS

A. Preserve or replace any existing Federal, State, County, City, and private land monuments encountered. All monument replacement by Contractor shall be performed by a land surveyor licensed in the State of Texas.

1.8 PAYMENT

A. The Work specified in this Section shall be considered incidental and payment will be included as part of the appropriate lump sum or unit prices specified in the Section 00100 Request for Proposal, Exhibit 00300.

PART 2 - PRODUCTS (NOT USED)

PART 3 - EXECUTION (NOT USED)

END OF SECTION 011716

© 2023 CDM Smith
All Rights Reserved

SECTION 012200 - MEASUREMENT AND PAYMENT

PART 1 - GENERAL

1.1 RELATED DOCUMENTS

A. Drawings and general provisions of the Contract, including General and Supplementary Conditions and other Division 01 Specification Sections, apply to this Section.

1.2 SUMMARY

A. Section includes administrative and procedural requirements for the measurement and payment of the various elements of the Work; with provisions applicable to lump sum prices, unit prices, and Owner-Directed Improvements, if applicable.

B. The Total Amount Proposed in the Bid Form shall cover all Work required by the Contract Documents. The lump sum and unit prices proposed shall include all costs in connection with the proper and successful completion of the Work, including but not limited to: furnishing all materials, equipment, supplies, and appurtenances; providing all construction equipment and tools; and performing all necessary labor and supervision to fully complete the Work. All Work not specifically set forth as to the pay item or items in the Bid shall be considered subsidiary obligations of Contractor and all costs in connection therewith shall be included in the prices or included in Bid.

C. Related Requirements:

1. Section 00300 – Bid Form

2. Section 00700 – General Conditions

3. Section 013300 – Submittal Procedures

4. 014000 "Quality Requirements" for field testing by an independent testing agency.

1.3 DEFINITIONS

A. Unit price is an amount incorporated into the Agreement, applicable during the duration of the Work as a price per unit of measurement for materials, equipment, or services, or a portion of the Work, added to or deducted from the Contract Sum by appropriate modification, if the scope of Work or estimated quantities of Work required by the Contract Documents are increased or decreased.

1.4 BID FORM

A. The Bid Form is a part of these Contract Documents and lists each item of work for which payment will be made. No payment will be made for items other than those listed in the Bid Form.

Lump Sum measurement will be for the entire item, unit of work, structure, or combination thereof, as specified and as indicated in the Bid Form.

B. Required items of work and incidentals necessary for the satisfactory completion of the Project which are not specifically listed in the Bid Form, and which are not specified in this Section to be measured or to be included in one of the items listed in the Bid Form shall be considered as incidental to the work required under this contract, and all costs thereof, including Contractor's overhead costs and profit, shall be considered as included in the prices Bid for the various Bid Items. The Contractor shall prepare his Bid accordingly.

C. Work includes furnishing all plant, labor, eBidquipment, tools and materials, and performing all operations required to complete the work satisfactorily, in place, as specified and as indicated on the Drawings.

D. Measurement

1. Measurement shall be based on the estimated percent complete of each item of the Schedule of Values, as determined by the Engineer.

E. Payment

1. Payment will be made at the lump sum price proportional to the completion percentages approved by the Engineer.

1.5 UNIT PRICE ITEMS

A. Unit prices include all necessary material, plus cost for delivery, installation, insurance, applicable taxes, overhead, and profit.

B. Measurement and Payment: See individual Specification Sections for work that requires establishment of unit prices. Methods of measurement and payment for unit prices are specified in those Sections.

C. Owner reserves the right to reject Contractor's measurement of work-in-place that involves use of established unit prices and to have this work measured, at Owner's expense, by an independent surveyor acceptable to Contractor.

1.6 LUMP SUM ITEMS

A. Lump Sum measurement will be for the entire item, unit of work, structure, or combination thereof, as specified and as indicated in the Bid Form. Measurement and payment for all Bid items indicated as Lump Sums shall include the cost of all labor, materials and equipment necessary to furnish, install, clean, test, and place each Bid item into operation; including permitting, general conditions, overhead and profit.

B. Progress payments will be based on schedule of values prepared by the Contractor and approved by the Engineer and Owner before acceptance of the first Application for Payment.

C. In order for the Contractor to request progress payments against Lump Sum items, Contractor shall provide a disaggregation or breakdown in sufficient measurable detail that is acceptable to Engineer.

D. Measurement

1. Measurement shall be based on the estimated percent complete of each item of the Schedule of Values, as determined by the Engineer.

E. Payment

1. Payment will be made at the lump sum price proportional to the completion percentages approved by the Engineer.

1.7 OWNER-DIRECTED IMPROVEMENT

A. Owner-Directed Improvements, if any, specified in the Contract Documents and indicated in the Bid Form are considered provisional amounts to be used only if directed. Owner-Directed Improvements are exclusive of work indicated in the Contract Documents for which payment is included under other items in the Bid Form. No work may be performed under an Owner-Directed Improvement without prior written approval of the Owner.

B. Any unused balance of the Owner-Directed Improvements shall revert to the Owner upon completion of the project. Prior to final payment, the original amount provided for Owner-Directed Improvements shall be adjusted to actual costs by deductive Change Order, adjusting the contract price, accordingly.

C. The Contractor shall make no claim, nor receive any compensation, for anticipated profits, loss of profit, damages, or any extra payment due to any unexpended portion of the Owner-Directed Improvements.

D. The Contractor is to include time for Owner-Directed Improvement work in the construction schedule. No adjustment of Contract Time shall be allowed for any work performed under Owner-Directed Improvement items.

E. Owner-Directed Improvement items shall be included in the Schedule of Values.

F. Unless otherwise indicated in the specific measurement and payment provisions under Owner-Directed Improvement items, the measurable and allowable costs for work performed under an Owner-Directed Improvement item shall be limited to the actual, demonstrable, and direct costs associated with that Owner-Directed Improvement item. Shipping and sales taxes are allowable costs.

1. No mark-up for overhead or profit shall be included for payment under an Owner-Directed Improvement account item. Overhead and profit shall be included in the contract base Bid or allocated across other Bid items.

2. Work authorized by the Owner under an Owner-Directed Improvement may be performed as a lump sum (negotiated before the fact), unit prices (when applicable), or time and material. For work performed under time and material, Contractor shall submit detailed verification (break-down) of all costs, subject to the approval of the Engineer or Owner.

1.8 PROGRESS PAYMENTS FOR INSURANCE, BONDS, MOBILIZATION AND DEMOBILIZATION

1. Payment for Insurance and Bonds

    a. Contractor's Insurance and Bonds shall include costs for insurance plus Performance and Payment Bonds.

    b. Payment for Insurance and Bonds will be made on the first approved monthly pay request with suitable evidence of the cost thereof. The amount should agree with the suitable evidence provided and the Schedule of Values.

    c. The amount of the Insurance and Bonds on the Schedule of Values shall not exceed 2.5 percent of the total contract amount. The amount of the Insurance, Bonds, and Mobilization/Demobilization shall not exceed 5 percent of the total contract amount.

2. Payment for Mobilization and Demobilization

    a. Mobilization and Demobilization includes costs of personnel, equipment and supplies, construction offices and the utility costs associated therewith, etc.

    b. Payments for Mobilization and Demobilization will be made as follows based upon the "adjusted contract amount" for construction items. The "adjusted contract amount" is defined as the total contract amount less the amount for Insurance and Bonds (Article 14.02.E.1 above) and less the amount for Mobilization and Demobilization.

    c. When 1 percent of the adjusted contract amount for construction items is earned, 25 percent of the mobilization and demobilization amount shown in the Schedule of Values will be paid.

    d. When 10 percent of the adjusted contract amount for construction items is earned, 50 percent of the mobilization and demobilization amount shown in the Schedule of Values will be paid.

    e. When 25 percent of the adjusted contract amount for construction items is earned, 75 percent of the mobilization and demobilization amount shown in the Schedule of Values will be paid.

    f. Upon Final Completion of all Work items, payment for the remainder of the mobilization and demobilization amount shown in the Schedule of Values will be made.

    g. The amount for Insurance, Bonds, and Mobilization/Demobilization shall not exceed 5 percent of the total contract amount.

© 2023 CDM Smith
All Rights Reserved

PART 2 - PRODUCTS (NOT USED)

PART 3 - EXECUTION (NOT USED)

END OF SECTION 012200

This page intentionally left blank.

© 2023 CDM Smith
All Rights Reserved

SECTION 012500 - SUBSTITUTION PROCEDURES

PART 1 - GENERAL

1.1 RELATED DOCUMENTS

A. Drawings and general provisions of the Contract, including General and Supplementary Conditions and other Division 01 Specification Sections, apply to this Section.

1.2 SUMMARY

A. Section includes administrative and procedural requirements for substitutions.

B. Related Requirements:

1. Section 012100 "Allowances" for products selected under an allowance.
2. Section 016000 "Product Requirements" for requirements for submitting comparable product submittals for products by listed manufacturers.

1.3 DEFINITIONS

A. Substitutions: Changes in products, materials, equipment, and methods of construction from those required by the Contract Documents.

1. Substitutions for Cause: Changes proposed by Contractor that are required due to changed Project conditions, such as unavailability of product, regulatory changes, or unavailability of required warranty terms.
2. Substitutions for Convenience: Changes proposed by Contractor or Owner that are not required to meet other Project requirements but may offer advantage to Contractor or Owner.

1.4 ACTION SUBMITTALS

A. Substitution Requests: Submit documentation identifying product or fabrication or installation method to be replaced. Include Specification Section number and title and Drawing numbers and titles.

1. Substitution Request Form: Use form that is part of web-based Project management software.
2. Documentation: Show compliance with requirements for substitutions and the following, as applicable:

a. Statement indicating why specified product or fabrication or installation method cannot be provided, if applicable.

b. Coordination of information, including a list of changes or revisions needed to other parts of the Work and to construction performed by Owner and separate contractors that will be necessary to accommodate proposed substitution.
c. Detailed comparison of significant qualities of proposed substitutions with those of the Work specified. Include annotated copy of applicable Specification Section. Significant qualities may include attributes, such as performance, weight, size, durability, visual effect, sustainable design characteristics, warranties, and specific features and requirements indicated. Indicate deviations, if any, from the Work specified.
d. Product Data, including drawings and descriptions of products and fabrication and installation procedures.
e. Samples, where applicable or requested.
f. Certificates and qualification data, where applicable or requested.
g. List of similar installations for completed projects, with project names and addresses as well as names and addresses of Engineers and owners.
h. Material test reports from a qualified testing agency, indicating and interpreting test results for compliance with requirements indicated.
i. Research reports evidencing compliance with building code in effect for Project, from ICC-ES.
j. Detailed comparison of Contractor's construction schedule using proposed substitutions with products specified for the Work, including effect on the overall Contract Time. If specified product or method of construction cannot be provided within the Contract Time, include letter from manufacturer, on manufacturer's letterhead, stating date of receipt of purchase order, lack of availability, or delays in delivery.
k. Cost information, including a proposal of change, if any, in the Contract Sum.
l. Contractor's certification that proposed substitution complies with requirements in the Contract Documents, except as indicated in substitution request, is compatible with related materials and is appropriate for applications indicated.
m. Contractor's waiver of rights to additional payment or time that may subsequently become necessary because of failure of proposed substitution to produce indicated results.

3. Engineer's Action: If necessary, Engineer will request additional information or documentation for evaluation within seven days of receipt of a request for substitution. Engineer will notify Contractor of acceptance or rejection of proposed substitution within seven days of receipt of request, or seven days of receipt of additional information or documentation, whichever is later.

a. Forms of Acceptance: Change Order, Construction Change Directive, or Engineer's Supplemental Instructions for minor changes in the Work.
b. Use product specified if Engineer does not issue a decision on use of a proposed substitution within time allocated.

1.5 QUALITY ASSURANCE

A. Compatibility of Substitutions: Investigate and document compatibility of proposed substitution with related products and materials. Engage a qualified testing agency to perform compatibility tests recommended by manufacturers.

1.6 PROCEDURES

A. Coordination: Revise or adjust affected work as necessary to integrate work of the approved substitutions.

1.7 SUBSTITUTIONS

A. Substitutions for Cause: Submit requests for substitution immediately on discovery of need for change, but not later than 15 days prior to time required for preparation and review of related submittals.

1. Conditions: Engineer will consider Contractor's request for substitution when the following conditions are satisfied. If the following conditions are not satisfied, Engineer will return requests without action, except to record noncompliance with these requirements:

   a. Requested substitution is consistent with the Contract Documents and will produce indicated results.
   b. Substitution request is fully documented and properly submitted.
   c. Requested substitution will not adversely affect Contractor's construction schedule.
   d. Requested substitution has received necessary approvals of authorities having jurisdiction.
   e. Requested substitution is compatible with other portions of the Work.
   f. Requested substitution has been coordinated with other portions of the Work.
   g. Requested substitution provides specified warranty.
   h. If requested substitution involves more than one contractor, requested substitution has been coordinated with other portions of the Work, is uniform and consistent, is compatible with other products, and is acceptable to all contractors involved.

B. Substitutions for Convenience: Not allowed unless otherwise indicated.

C. Substitutions for Convenience: Engineer will consider requests for substitution if received within 60 days after commencement of the Work. Requests received after that time may be considered or rejected at discretion of Engineer.

1. Conditions: Engineer will consider Contractor's request for substitution when the following conditions are satisfied. If the following conditions are not satisfied, Engineer will return requests without action, except to record noncompliance with these requirements:

   a. Requested substitution offers Owner a substantial advantage in cost, time, energy conservation, or other considerations, after deducting additional responsibilities Owner must assume. Owner's additional responsibilities may include compensation to Engineer for redesign and evaluation services, increased cost of other construction by Owner, and similar considerations.
   b. Requested substitution does not require extensive revisions to the Contract Documents.
   c. Requested substitution is consistent with the Contract Documents and will produce indicated results.
   d. Substitution request is fully documented and properly submitted.

e. Requested substitution will not adversely affect Contractor's construction schedule.
f. Requested substitution has received necessary approvals of authorities having jurisdiction.
g. Requested substitution is compatible with other portions of the Work.
h. Requested substitution has been coordinated with other portions of the Work.
i. Requested substitution provides specified warranty.
j. If requested substitution involves more than one contractor, requested substitution has been coordinated with other portions of the Work, is uniform and consistent, is compatible with other products, and is acceptable to all contractors involved.

PART 2 - PRODUCTS (NOT USED)

PART 3 - EXECUTION (NOT USED)

END OF SECTION 012500

© 2023 CDM Smith
All Rights Reserved

SECTION 012900 - PAYMENT PROCEDURES

PART 1 - GENERAL

1.1 RELATED DOCUMENTS

A. Drawings and general provisions of the Contract, including General and Supplementary Conditions and other Division 01 Specification Sections, apply to this Section.

1.2 SUMMARY

A. Section includes administrative and procedural requirements necessary to prepare and process Applications for Payment.

B. Related Requirements:

1. Section 012100 "Allowances" for procedural requirements governing the handling and processing of allowances.

1.3 DEFINITIONS

A. Schedule of Values: A statement furnished by Contractor allocating portions of the Contract Sum to various portions of the Work and used as the basis for reviewing Contractor's Applications for Payment.

1.4 SCHEDULE OF VALUES

A. Coordination: Coordinate preparation of the schedule of values with preparation of Contractor's construction schedule.

1. Coordinate line items in the schedule of values with items required to be indicated as separate activities in Contractor's construction schedule.
2. Submit the schedule of values to Engineer at earliest possible date, but no later than ten days before the date scheduled for submittal of initial Applications for Payment.
3. Subschedules for Phased Work: Where the Work is separated into phases requiring separately phased payments, provide subschedules showing values coordinated with each phase of payment.
4. Subschedules for Separate Elements of Work: Where the Contractor's construction schedule defines separate elements of the Work, provide subschedules showing values coordinated with each element.
5. Subschedules for Separate Design Contracts: Where the Owner has retained design professionals under separate contracts who will each provide certification of payment requests, provide subschedules showing values coordinated with the scope of each design services contract, as described in Section 011000 "Summary."

B. Format and Content: Use Project Manual table of contents as a guide to establish line items for the schedule of values. Provide at least one line item for each Specification Section.

1. Identification: Include the following Project identification on the schedule of values:

   a. Project name and location.
   b. Owner's name.
   c. Owner's Project number.
   d. Name of Engineer.
   e. Engineer's Project number.
   f. Contractor's name and address.
   g. Date of submittal.

2. Arrange schedule of values consistent with format of AIA Document G703.
3. Arrange the schedule of values in tabular form, with separate columns to indicate the following for each item listed:

   a. Related Specification Section or division.
   b. Description of the Work.
   c. Name of subcontractor.
   d. Name of manufacturer or fabricator.
   e. Name of supplier.
   f. Change Orders (numbers) that affect value.
   g. Dollar value of the following, as a percentage of the Contract Sum to nearest one-hundredth percent, adjusted to total 100 percent. Round dollar amounts to whole dollars, with total equal to Contract Sum.

      1) Labor.
      2) Materials.
      3) Equipment.

4. Provide a breakdown of the Contract Sum in enough detail to facilitate continued evaluation of Applications for Payment and progress reports. Provide multiple line items for principal subcontract amounts in excess of five percent of the Contract Sum.
5. Provide a separate line item in the schedule of values for each part of the Work where Applications for Payment may include materials or equipment purchased or fabricated and stored, but not yet installed.
6. Allowances: Provide a separate line item in the schedule of values for each allowance. Show line-item value of unit-cost allowances, as a product of the unit cost, multiplied by measured quantity. Use information indicated in the Contract Documents to determine quantities.
7. Purchase Contracts: Provide a separate line item in the schedule of values for each Purchase contract. Show line-item value of Purchase contract. Indicate Owner payments or deposits, if any, and balance to be paid by Contractor.
8. Overhead Costs, Proportional Distribution: Include total cost and proportionate share of general overhead and profit for each line item.
9. Overhead Costs, Separate Line Items: Show cost of temporary facilities and other major cost items that are not direct coat of actual work-in-place as separate line items.
10. Temporary Facilities: Show cost of temporary facilities and other major cost items that are not direct cost of actual work-in-place as separate line items.

11. Closeout Costs. Include separate line items under Contractor and principal subcontracts for Project closeout requirements in an amount totaling five percent of the Contract Sum and subcontract amount.
12. Schedule of Values Revisions: Revise the schedule of values when Change Orders or Construction Change Directives result in a change in the Contract Sum. Include at least one separate line item for each Change Order and Construction Change Directive.

1.5 APPLICATIONS FOR PAYMENT

A. Each Application for Payment following the initial Application for Payment shall be consistent with previous applications and payments as certified by Engineer and Inspector and paid for by Owner.

B. Payment Application Times: The date for each progress payment is indicated in the Owner/Contractor Agreement. The period of construction work covered by each Application for Payment is the period indicated in the Agreement.

C. Payment Application Times: Submit Application for Payment to Engineer by the 5th day of the month. The period covered by each Application for Payment is one month, ending on the [last day of the month.

1. Submit draft copy of Application for Payment twenty days prior to due date for review by Engineer.

D. Application for Payment Forms: Use AIA Document G703 as form for Applications for Payment. The contractor must use Owner's one page Pay Estimate and Signature and Certification Form for the first page of every application for payment.

1. Other Application for Payment forms proposed by the Contractor may be acceptable to Engineer, Inspector, and Owner. Submit forms for approval with initial submittal of schedule of values.

E. Application Preparation: Complete every entry on form. Notarize and execute by a person authorized to sign legal documents on behalf of Contractor. Engineer will return incomplete applications without action.

1. Entries shall match data on the schedule of values and Contractor's construction schedule. Use updated schedules if revisions were made.
2. Include amounts for work completed following previous Application for Payment, whether or not payment has been received. Include only amounts for work completed at time of Application for Payment.
3. Include amounts of Change Orders and Construction Change Directives issued before last day of construction period covered by application.
4. Indicate separate amounts for work being carried out under Owner-requested project acceleration.

F. Stored Materials: Include in Application for Payment amounts applied for materials or equipment purchased or fabricated and stored, but not yet installed.

1. Provide certificate of insurance, evidence of transfer of title to Owner, and consent of surety to payment.
2. Provide supporting documentation that verifies amount requested, such as paid invoices. Match amount requested with amounts indicated on documentation; do not include overhead and profit on stored materials.
3. Provide summary documentation for stored materials indicating the following:

    a. Value of materials previously stored and remaining stored as of date of previous Applications for Payment.
    b. Value of previously stored materials put in place after date of previous Application for Payment and on or before date of current Application for Payment.
    c. Value of materials stored since date of previous Application for Payment and remaining stored as of date of current Application for Payment.

G. Transmittal: Submit One (electronic) signed and notarized original copies of each Application for Payment to Engineer and Owner by a method ensuring receipt within 24 hours. One copy shall include waivers of lien and similar attachments if required.

1. Transmit each copy with a transmittal form listing attachments and recording appropriate information about application.

H. Waivers of Mechanic's Lien: With each Application for Payment, submit waivers of mechanic's lien from entities lawfully entitled to file a mechanic's lien arising out of the Contract and related to the Work covered by the payment.

1. Submit partial waivers on each item for amount requested in previous application, after deduction for retainage, on each item.
2. When an application shows completion of an item, submit conditional final or full waivers.
3. Owner reserves the right to designate which entities involved in the Work must submit waivers.
4. Submit final Application for Payment with or preceded by conditional final waivers from every entity involved with performance of the Work covered by the application who is lawfully entitled to a lien.
5. Waiver Forms: Submit executed waivers of lien on forms acceptable to Owner.

I. Maintain an updated set of drawings to be used as record drawings in accordance with Section 017839 “Project Record Documents.” As a prerequisite for monthly progress payments, exhibit the updated record drawings for review by Owner and Engineer for completeness and accuracy.

J. Initial Application for Payment: Administrative actions and submittals that must precede or coincide with submittal of first Application for Payment include the following:

1. List of subcontractors.
2. Schedule of values.
3. Contractor's construction schedule.
4. Combined Contractor's construction schedule incorporating Work of multiple contracts, with indication of acceptance of schedule by each Contractor.

K. Application for Payment at Substantial Completion: After Engineer issues the Certificate of Substantial Completion, submit an Application for Payment showing 100 percent completion for portion of the Work claimed as substantially complete.

1. Include documentation supporting claim that the Work is substantially complete and a statement showing an accounting of changes to the Contract Sum.

   a. Complete administrative actions, submittals, and Work proceeding this application, as described in Section 017700 "Closeout Procedures."

2. Include initial submittal of closeout record drawings in accordance with Section 017839 "Project Record Documents."
3. This application shall reflect Certificate(s) of Substantial Completion issued previously for Owner occupancy of designated portions of the Work.

L. Final Payment Application: After completing Project closeout requirements, submit final Application for Payment with releases and supporting documentation not previously submitted and accepted, including, but not limited, to the following:

1. Evidence of completion of Project closeout requirements.
2. Certification of completion of final punch list items.
3. Insurance certificates for products and completed operations where required and proof that taxes, fees, and similar obligations were paid.
4. Final submittal of closeout record drawings in accordance with Section 017839 "Project Record Documents."
5. Updated final statement, accounting for final changes to the Contract Sum.
6. AIA Document G706.
7. AIA Document G706A.
8. AIA Document G707.
9. Evidence that claims have been settled.
10. Final meter readings for utilities, a measured record of stored fuel, and similar data as of date of Substantial Completion or when Owner took possession of and assumed responsibility for corresponding elements of the Work.
11. Final liquidated damages settlement statement.
12. Proof that taxes, fees, and similar obligations are paid.
13. Waivers and releases.

PART 2 - PRODUCTS (NOT USED)

PART 3 - EXECUTION (NOT USED)

END OF SECTION 012900

© 2023 CDM Smith
All Rights Reserved

This page intentionally left blank.

© 2023 CDM Smith
All Rights Reserved

SECTION 013100 - PROJECT MANAGEMENT AND COORDINATION

PART 1 - GENERAL

1.1 RELATED DOCUMENTS

A. Drawings and general provisions of the Contract, including General and Supplementary Conditions and other Division 01 Specification Sections, apply to this Section.

1.2 SUMMARY

A. Section includes administrative provisions for coordinating construction operations on Project, including, but not limited to, the following:

1. General coordination procedures.
2. Coordination drawings.
3. RFIs.
4. Digital project management procedures.
5. Project meetings.

B. Each contractor shall participate in coordination requirements. Certain areas of responsibility are assigned to a specific contractor.

C. Related Requirements:

1. Section 017300 "Execution" for procedures for coordinating general installation and field-engineering services, including establishment of benchmarks and control points.
2. Section 017700 "Closeout Procedures" for coordinating closeout of the Contract.
3. Section 019113 "General Commissioning Requirements" for coordinating the Work with Owner's Commissioning Authority.

1.3 DEFINITIONS

A. RFI: Request for Information. Request from Owner, Engineer, or Contractor seeking information required by or clarifications of the Contract Documents.

1.4 INFORMATIONAL SUBMITTALS

A. Subcontract List: Prepare a written summary identifying individuals or firms proposed for each portion of the Work, including those who are to furnish products or equipment fabricated to a special design. Include the following information in tabular form:

1. Name, address, telephone number, and email address of entity performing subcontract or supplying products.
2. Number and title of related Specification Section(s) covered by subcontract.
3. Drawing number and detail references, as appropriate, covered by subcontract.

B. Key Personnel Names: Within 15 days of starting construction operations, submit a list of key personnel assignments, including superintendent and other personnel in attendance at Project site. Identify individuals and their duties and responsibilities; list addresses, cellular telephone numbers, and e-mail addresses. Provide names, addresses, and telephone numbers of individuals assigned as alternates in the absence of individuals assigned to Project.

1. Post copies of list in Project meeting room, in temporary field office, and in prominent location inbuilt facility. Keep list current at all times.

1.5 GENERAL COORDINATION PROCEDURES

A. Coordination: Coordinate construction operations included in different Sections of the Specifications to ensure efficient and orderly installation of each part of the Work. Coordinate construction operations included in different Sections that depend on each other for proper installation, connection, and operation.

1. Schedule construction operations in sequence required to obtain the best results, where installation of one part of the Work depends on installation of other components, before or after its own installation.
2. Coordinate installation of different components to ensure maximum performance and accessibility for required maintenance, service, and repair.
3. Make adequate provisions to accommodate items scheduled for later installation.

B. Prepare memoranda for distribution to each party involved, outlining special procedures required for coordination. Include such items as required notices, reports, and list of attendees at meetings.

1. Prepare similar memoranda for Owner and separate contractors if coordination of their Work is required.

C. Administrative Procedures: Coordinate scheduling and timing of required administrative procedures with other construction activities to avoid conflicts and to ensure orderly progress of the Work. Such administrative activities include, but are not limited to, the following:

1. Preparation of Contractor's construction schedule.
2. Preparation of the schedule of values.
3. Installation and removal of temporary facilities and controls.
4. Delivery and processing of submittals.
5. Progress meetings.
6. Preinstallation conferences.
7. Project closeout activities.
8. Startup and adjustment of systems.

1.6 REQUEST FOR INFORMATION (RFI)

A. General: Immediately on discovery of the need for additional information, clarification, or interpretation of the Contract Documents, Contractor shall prepare and submit an RFI in the form specified.

1. Engineer will return without response those RFIs submitted to Engineer by other entities controlled by Contractor.
2. Coordinate and submit RFIs in a prompt manner to avoid delays in Contractor's work or work of subcontractors.

B. Content of the RFI: Include a detailed, legible description of item needing information or interpretation and the following:

1. Project name.
2. Owner name.
3. Owner's Project number.
4. Name of Engineer.
5. Engineer's Project number.
6. Date.
7. Name of Contractor.
8. RFI number, numbered sequentially.
9. RFI subject.
10. Specification Section number and title and related paragraphs, as appropriate.
11. Drawing number and detail references, as appropriate.
12. Field dimensions and conditions, as appropriate.
13. Contractor's suggested resolution. If Contractor's suggested resolution impacts the Contract Time or the Contract Sum, Contractor shall state impact in the RFI.
14. Contractor's signature.
15. Attachments: Include sketches, descriptions, measurements, photos, Product Data, Shop Drawings, coordination drawings, and other information necessary to fully describe items needing interpretation.

    a. Include dimensions, thicknesses, structural grid references, and details of affected materials, assemblies, and attachments on attached sketches.

C. Engineer's Action: Engineer will review each RFI, determine action required, and respond. Allow seven days for Engineer's response for each RFI. RFIs received by Engineer after 1:00 p.m. will be considered as received the following working day.

1. The following Contractor-generated RFIs will be returned without action:

    a. Requests for approval of submittals.
    b. Requests for approval of substitutions.
    c. Requests for approval of Contractor's means and methods.
    d. Requests for coordination information already indicated in the Contract Documents.
    e. Requests for adjustments in the Contract Time or the Contract Sum.
    f. Requests for interpretation of Engineer's actions on submittals.
    g. Incomplete RFIs or inaccurately prepared RFIs.

2. Engineer's action may include a request for additional information, in which case Engineer's time for response will date from time of receipt by Engineer of additional information.
3. Engineer's action on RFIs that may result in a change to the Contract Time or the Contract Sum may be eligible for Contractor to submit Change Proposal.

a. If Contractor believes the RFI response warrants change in the Contract Time or the Contract Sum, notify Engineer in writing within 5 days of receipt of the RFI response.

D. RFI Log: Prepare, maintain, and submit a tabular log of RFIs organized by the RFI number.

1.7 PROJECT MEETINGS

A. General: Schedule and conduct meetings and conferences at Project site unless otherwise indicated.

1. Attendees: Inform participants and others involved, and individuals whose presence is required, of date and time of each meeting. Notify Owner and Engineer of scheduled meeting dates and times a minimum of 10 working days prior to meeting.
2. Agenda: Prepare the meeting agenda. Distribute the agenda to all invited attendees.
3. Minutes: Entity responsible for conducting meeting will record significant discussions and agreements achieved. Distribute the meeting minutes to everyone concerned, including Owner and Engineer, within three days of the meeting.

B. Preconstruction Conference: Engineer will schedule and conduct a preconstruction conference before starting construction, at a time convenient to Owner and Engineer, but no later than 15 days after execution of the Agreement.

C. Project Closeout Conference: Schedule and conduct a project closeout conference, at a time convenient to Owner and Engineer, but no later than 90 days prior to the scheduled date of Substantial Completion.

1. Conduct the conference to review requirements and responsibilities related to Project closeout.
2. Attendees: Authorized representatives of Owner, Engineer, and their consultants; Contractor and its superintendent; major subcontractors; suppliers; and other concerned parties shall attend the meeting. Participants at the meeting shall be familiar with Project and authorized to conclude matters relating to the Work.
3. Agenda: Discuss items of significance that could affect or delay Project closeout, including the following:

a. Preparation of Record Documents.
b. Procedures required prior to inspection for Substantial Completion and for final inspection for acceptance.
c. Submittal of written warranties.
d. Requirements for completing sustainable design documentation.
e. Requirements for preparing operations and maintenance data.
f. Requirements for delivery of material samples, attic stock, and spare parts.
g. Requirements for demonstration and training.
h. Preparation of Contractor's punch list.
i. Procedures for processing Applications for Payment at Substantial Completion and for final payment including final change order.
j. Submittal procedures.
k. Coordination of separate contracts.

l. Owner's partial occupancy requirements including certificate of occupancy and closeout of permits.
m. Installation of Owner's furniture, fixtures, and equipment.
n. Responsibility for removing temporary facilities and controls.
o. Final cleaning.

4. Minutes: Entity conducting meeting will record and distribute meeting minutes.

D. Progress Meetings: Conduct progress meetings at monthly intervals.

1. Coordinate dates of meetings with preparation of payment requests.
2. Attendees: In addition to representatives of Owner and Engineer, each contractor, subcontractor, supplier, and other entity concerned with current progress or involved in planning, coordination, or performance of future activities shall be represented at these meetings. All participants at the meeting shall be familiar with Project and authorized to conclude matters relating to the Work.
3. Agenda: Review and correct or approve minutes of previous progress meeting. Review other items of significance that could affect progress. Include topics for discussion as appropriate to status of Project.

a. Contractor's Construction Schedule: Review progress since the last meeting. Determine whether each activity is on time, ahead of schedule, or behind schedule, in relation to Contractor's construction schedule. Determine how construction behind schedule will be expedited; secure commitments from parties involved to do so. Discuss whether schedule revisions are required to ensure that current and subsequent activities will be completed within the Contract Time.

1) Review schedule for next period.

b. Review present and future needs of each entity present, including the following:

1) Interface requirements.
2) Sequence of operations.
3) Status of submittals.
4) Deliveries.
5) Off-site fabrication.
6) Access.
7) Site use.
8) Temporary facilities and controls.
9) Progress cleaning.
10) Quality and work standards.
11) Status of correction of deficient items.
12) Field observations.
13) Status of RFIs.
14) Status of Proposal Requests.
15) Pending changes.
16) Status of Change Orders.
17) Pending claims and disputes.
18) Documentation of information for payment requests.

4. Minutes: Entity responsible for conducting the meeting will record and distribute the meeting minutes to each party present and to parties requiring information.

    a. Schedule Updating: Revise Contractor's construction schedule after each progress meeting, where revisions to the schedule have been made or recognized. Issue revised schedule concurrently with the report of each meeting.

PART 2 - Coordination Meetings: Conduct Project coordination meetings at regular intervals. Project coordination meetings are in addition to specific meetings held for other purposes, such as progress meetings.PRODUCTS (NOT USED)

PART 3 - EXECUTION (NOT USED)

END OF SECTION 013100

© 2023 CDM Smith
All Rights Reserved

SECTION 013233 - PHOTOGRAPHIC DOCUMENTATION

PART 1 - GENERAL

1.1 RELATED DOCUMENTS

A. Drawings and general provisions of the Contract, including General and Supplementary Conditions and other Division 01 Specification Sections, apply to this Section.

1.2 SUMMARY

A. Section includes administrative and procedural requirements for the following:

1. Aerial and preconstruction photographs.
2. Concealed Work photographs.
3. Periodic construction photographs.
4. Final Completion construction photographs.
5. Preconstruction video recordings.
6. Periodic construction video recordings.

B. Related Requirements:

1. Section 017700 "Closeout Procedures" for submitting photographic documentation as Project Record Documents at Project closeout.
2. Section 017900 "Demonstration and Training" for submitting video recordings of demonstration of equipment and training of Owner's personnel.
3. Section G3 "Site Clearing" for related information.

1.3 INFORMATIONAL SUBMITTALS

A. Key Plan: Submit key plan of Project site and building with notation of vantage points marked for location and direction of each photograph and video recording. Indicate elevation or story of construction. Include same information as corresponding photographic documentation.

B. Digital Photographs: Submit image files within three days of taking photographs.

1. Submit photos by uploading to web-based Project management software site. Include copy of key plan indicating each photograph's location and direction.
2. Identification: Provide the following information with each image description in web-based Project management software site:

a. Name of Project.
b. Name and contact information for photographer.
c. Name of Engineer.
d. Name of Contractor.
e. Date photograph was taken.
f. Description of location, vantage point, and direction.

g. Unique sequential identifier keyed to accompanying key plan.

1.4 QUALITY ASSURANCE

A. Photographer Qualifications: An individual who has been regularly engaged as a professional photographer of construction projects for not less than three years.

B. Construction Webcam Service Provider: A firm specializing in providing photographic equipment, web-based software, and related services for construction projects, with a record of providing satisfactory services similar to those required for Project.

1.5 FORMATS AND MEDIA

A. Digital Photographs: Provide color images in JPG format, produced by a digital camera with minimum sensor size of 12 megapixels, and at an image resolution of not less than 3200 by 2400 pixels, and with vibration-reduction technology. Use flash in low light levels or backlit conditions.

B. Digital Video Recordings: Provide high-resolution, digital video in MPEG format, produced by a digital camera with minimum sensor resolution of 12 megapixels and capable of recording in full high-definition mode with vibration-reduction technology. Provide supplemental lighting in low light levels or backlit conditions.

C. Digital Images: Submit digital media as originally recorded in the digital camera, without alteration, manipulation, editing, or modifications using image-editing software.

D. Metadata: Record accurate date and time from camera.

E. File Names: Name media files with date, Project area and sequential numbering suffix.

F. Usage Rights

1. Obtain and transfer copyright usage rights from photographer and videographer to Owner for unlimited reproduction of photographic and videographic documentation.

1.6 CONSTRUCTION PHOTOGRAPHS

A. Photographer: Engage a qualified photographer to take construction photographs.

B. General: Take photographs with maximum depth of field and in focus.

1. Maintain key plan with each set of construction photographs that identifies each photographic location.

C. Preconstruction Photographs: Before commencement of the Work take photographs of Project site and surrounding properties, including existing items to remain during construction, from different vantage points, as directed by Engineer.

1. Flag excavation areas and construction limits before taking construction photographs.

2. Take 20 photographs to show existing conditions adjacent to property before starting the Work.
3. Take additional photographs as required to record settlement or cracking of adjacent structures, pavements, and improvements.

D. Concealed Work Photographs: Before proceeding with installing work that will conceal other work, take photographs sufficient in number, with annotated descriptions, to record nature and location of concealed Work, including, but not limited to, the following:
1. Underground utilities.
2. Underslab services.
3. Piping.
4. Electrical conduit.
5. Waterproofing and weather-resistant barriers.
6. Filters during installation before and after the underdrains are installed. Inside the Disinfection basin prior to filling the tank with water.

E. Periodic Construction Photographs: Take 50 photographs monthly coinciding with the cutoff date associated with each Application for Payment. Select vantage points to show status of construction and progress since last photographs were taken.

F. Final Completion Construction Photographs: Take at least 100 photographs after date of Substantial Completion (for each Substantial Completion milestone) for submission as Project Record Documents. Engineer will inform photographer of desired vantage points.

G. Additional Photographs: Engineer may request photographs in addition to periodic photographs specified. Additional photographs will be paid for by Change Order and are not included in the Contract Sum.

1. Three days' notice will be given, where feasible.
2. In emergency situations, take additional photographs within 24 hours of request.
3. Circumstances that could require additional photographs include, but are not limited to, the following:

a. Special events planned at Project site.
b. Immediate follow-up when on-site events result in construction damage or losses.
c. Photographs shall be taken at fabrication locations away from Project site. These photographs are not subject to unit prices or unit-cost allowances.
d. Substantial Completion of a major phase or component of the Work.
e. Extra record photographs at time of final acceptance.
f. Owner's request for special publicity photographs.

PART 2 - PRODUCTS (NOT USED)

PART 3 - EXECUTION (NOT USED)

END OF SECTION 013233

© 2023 CDM Smith
All Rights Reserved

This page intentionally left blank.

© 2023 CDM Smith
All Rights Reserved

SECTION 013300 - SUBMITTAL PROCEDURES

PART 1 - GENERAL

1.1 RELATED DOCUMENTS

A. Drawings and general provisions of the Contract, including General and Supplementary Conditions and other Division 01 Specification Sections, apply to this Section.

1.2 SUMMARY

A. Section Includes:

1. Submittal schedule requirements.
2. Administrative and procedural requirements for submittals.

B. Related Requirements:
1. Section 013100 "Project Management and Coordination" for submitting coordination drawings and subcontract list and for requirements for web-based Project software.
2. Section 013233 "Photographic Documentation" for submitting preconstruction photographs, periodic construction photographs, and Final Completion construction photographs.
3. Section 014000 "Quality Requirements" for submitting test and inspection reports, and schedule of tests and inspections.
4. Section 017700 "Closeout Procedures" for submitting closeout submittals and maintenance material submittals.
5. Section 017823 "Operation and Maintenance Data" for submitting operation and maintenance manuals.
6. Section 017900 "Demonstration and Training" for submitting video recordings of demonstration of equipment and training of Owner's personnel.

1.3 DEFINITIONS

A. Action Submittals: Written and graphic information and physical samples that require Engineer's responsive action. Action submittals are those submittals indicated in individual Specification Sections as "action submittals."

B. Informational Submittals: Written and graphic information and physical samples that do not require Engineer's responsive action. Submittals may be rejected for not complying with requirements. Informational submittals are those submittals indicated in individual Specification Sections as "informational submittals."

C. Mass Submittals: Six or more submittals or items in one day or 15 or more submittals or items in one week.

1.4 SUBMITTAL SCHEDULE

A. Submittal Schedule: Submit, as an action submittal, a list of submittals, arranged in chronological order by dates required by construction schedule. Include time required for review, ordering, manufacturing, fabrication, and delivery when establishing dates. Include additional time required for making corrections or revisions to submittals noted by Engineer and additional time for handling and reviewing submittals required by those corrections.

1. Coordinate submittal schedule with list of subcontracts, the schedule of values, and Contractor's construction schedule.
2. Initial Submittal Schedule: Submit concurrently with startup construction schedule. Include submittals required during the first 60 days of construction. List those submittals required to maintain orderly progress of the Work and those required early because of long lead time for manufacture or fabrication.
3. Final Submittal Schedule: Submit concurrently with the first complete submittal of Contractor's construction schedule.

    a. Submit revised submittal schedule as required to reflect changes in current status and timing for submittals.

4. Format: Arrange the following information in a tabular format:

    a. Scheduled date for first submittal.
    b. Specification Section number and title.
    c. Submittal Category: Action; informational.
    d. Name of subcontractor.
    e. Description of the Work covered.
    f. Scheduled date for Engineer's final release or approval.
    g. Scheduled dates for purchasing.
    h. Scheduled date of fabrication.
    i. Scheduled dates for installation.
    j. Activity or event number.

1.5 SUBMITTAL FORMATS

A. Numbering System: Utilize the following example submittal identification numbering system to identify submittals and as file names for PDF submissions:

1. First Identifier - Alphabet Character: D, S, M or I which represents Shop Drawing (including working drawings and product data), Sample, Manual (Operating & Maintenance) or Informational, respectively.
2. Second Identifier - Next 6 or 8 Digits: Applicable Specification Section Number. Do not mix submittals from different specification sections into a single submittal.
3. Third Identifier - Next Three Digits: Sequential number of each separate item or drawing submitted under each Specification Section, in chronological order submitted, starting at 001.
4. Fourth Identifier - Last Alphabet Character: A to Z, indicating the submission (or resubmission) of the same submittal, i.e., "A" = 1st submission, "B" = 2nd submission, "C" = 3rd submission, etc.
5. EXAMPLE: D-033000.13-008-B.

a. D = Shop Drawing.
b. 03 30 00.13 = Section; use only 6 digits for sections that do not include 8 digits.
c. 008 = the eighth different submittal under this Section.
d. B = the second submission (first resubmission) of that particular shop drawing.

B. Submittal Information: Include the following information in each submittal:

1. Project name.
2. Date.
3. Name of Engineer.
4. Name of Contractor.
5. Name of firm or entity that prepared submittal.
6. Names of subcontractor, manufacturer, and supplier.
7. Unique submittal number, including revision identifier. Include Specification Section number with sequential alphanumeric identifier and alphanumeric suffix for resubmittals.
8. Category and type of submittal.
9. Submittal purpose and description.
10. Number and title of Specification Section, with paragraph number and generic name for each of multiple items.
11. Drawing number and detail references, as appropriate.
12. Indication of full or partial submittal.
13. Location(s) where product is to be installed, as appropriate.
14. Other necessary identification.
15. Remarks.
16. Signature of transmitter.

C. Options: Identify options requiring selection by Engineer.

D. Deviations and Additional Information: On each submittal, clearly indicate deviations from requirements in the Contract Documents, including minor variations and limitations; include relevant additional information and revisions, other than those requested by Engineer on previous submittals. Indicate by highlighting on each submittal or noting on attached separate sheet.

E. Paper Submittals: For Operation and Maintenance Manuals only.

1. Place a permanent label or title block on each submittal item for identification; include name of firm or entity that prepared submittal.
2. Provide a space approximately 6 by 8 inches on label or beside title block to record Contractor's review and approval markings and action taken by Engineer.

F. Submittals Utilizing Web-Based Project Software: Prepare submittals as PDF files or other format indicated by Project management software.

1.6 SUBMITTAL PROCEDURES

A. Prepare and submit submittals required by individual Specification Sections. Types of submittals are indicated in individual Specification Sections.

1. Web-Based Project Management Software: Project Mates. ***Contractor is responsible for the cost of using this software for construction documentation tracking for the project including up to three users with the City and three additional users with CDM Smith.***
2. Prepare submittals in PDF form, and upload to web-based Project management software website. Enter required data in web-based software site to fully identify submittal.

B. Coordination: Coordinate preparation and processing of submittals with performance of construction activities.

1. Coordinate each submittal with fabrication, purchasing, testing, delivery, other submittals, and related activities that require sequential activity.
2. Submit all submittal items required for each Specification Section concurrently unless partial submittals for portions of the Work are indicated on approved submittal schedule.
3. Submit action submittals and informational submittals required by the same Specification Section as separate packages under separate transmittals.
4. Coordinate transmittal of submittals for related parts of the Work specified in different Sections, so processing will not be delayed because of need to review submittals concurrently for coordination.

    a. Engineer reserves the right to withhold action on a submittal requiring coordination with other submittals until related submittals are received.

C. Processing Time: Allow time for submittal review, including time for resubmittals, as follows. Time for review shall commence on Engineer's receipt of submittal. No extension of the Contract Time will be authorized because of failure to transmit submittals enough in advance of the Work to permit processing, including resubmittals.

1. Initial Review: Allow 30 days for initial review of each submittal. Allow additional time if coordination with subsequent submittals is required. Engineer will advise Contractor when a submittal being processed must be delayed for coordination.
2. Intermediate Review: If intermediate submittal is necessary, process it in same manner as initial submittal.
3. Resubmittal Review: Allow 30 working days for review of each resubmittal.

D. Resubmittals: Make resubmittals in same form and number of copies as initial submittal.

1. Note date and content of previous submittal.
2. Note date and content of revision in label or title block and clearly indicate extent of revision.
3. Resubmit submittals until they are marked with approval notation from Engineer's action stamp.
4. Repetitive Reviews: Shop drawings, O&M manuals, and other submittals will be reviewed no more than twice at the Owner's expense. All subsequent reviews will be performed at the Contractor's expense. Reimburse the Owner for all costs invoiced by Engineer for the third and subsequent reviews.

E. Distribution: Furnish copies of final submittals to manufacturers, subcontractors, suppliers, fabricators, installers, authorities having jurisdiction, and others as necessary for performance of construction activities. Show distribution on transmittal forms.

F. Use for Construction: Retain complete copies of submittals on Project site. Use only final action submittals that are marked with approval notation from Engineer's action stamp.

1.7 SUBMITTAL REQUIREMENTS

A. Product Data: Collect information into a single submittal for each element of construction and type of product or equipment.

1. If information must be specially prepared for submittal because standard published data are unsuitable for use, submit as Shop Drawings, not as Product Data.
2. Mark each copy of each submittal to show which products and options are applicable.
3. Include the following information, as applicable:

   a. Manufacturer's catalog cuts.
   b. Manufacturer's product specifications.
   c. Standard color charts.
   d. Statement of compliance with specified referenced standards.
   e. Testing by recognized testing agency.
   f. Application of testing agency labels and seals.
   g. Notation of coordination requirements.
   h. Availability and delivery time information.

4. For equipment, include the following in addition to the above, as applicable:

   a. Wiring diagrams that show factory-installed wiring.
   b. Printed performance curves.
   c. Operational range diagrams.
   d. Clearances required to other construction, if not indicated on accompanying Shop Drawings.

5. Submit Product Data before Shop Drawings, and before or concurrently with Samples.

B. Shop Drawings: Prepare Project-specific information, drawn accurately to scale. Do not base Shop Drawings on reproductions of the Contract Documents or standard printed data unless submittal based on Engineer's digital data drawing files is otherwise permitted.

1. Preparation: Fully illustrate requirements in the Contract Documents. Include the following information, as applicable:

   a. Identification of products.
   b. Schedules.
   c. Compliance with specified standards.
   d. Notation of coordination requirements.
   e. Notation of dimensions established by field measurement.
   f. Relationship and attachment to adjoining construction clearly indicated.
   g. Seal and signature of professional engineer if specified.

C. Samples: Submit Samples for review of type, color, pattern, and texture for a check of these characteristics with other materials.

1. Transmit Samples that contain multiple, related components such as accessories together in one submittal package.
2. Identification: Permanently attach label on unexposed side of Samples that includes the following:

a. Project name and submittal number.
b. Generic description of Sample.
c. Product name and name of manufacturer.
d. Sample source.
e. Number and title of applicable Specification Section.
f. Specification paragraph number and generic name of each item.

3. Web-Based Project Management Software: Prepare submittals in PDF form, and upload to web-based Project software website. Enter required data in web-based software site to fully identify submittal.
4. Disposition: Maintain sets of approved Samples at Project site, available for quality-control comparisons throughout the course of construction activity. Sample sets may be used to determine final acceptance of construction associated with each set.

   a. Samples that may be incorporated into the Work are indicated in individual Specification Sections. Such Samples must be in an undamaged condition at time of use.
   b. Samples not incorporated into the Work, or otherwise designated as Owner's property, are the property of Contractor.

5. Samples for Initial Selection: Submit manufacturer's color charts consisting of units or sections of units, showing the full range of colors, textures, and patterns available.

   a. Number of Samples: Submit two full set(s) of available choices where color, pattern, texture, or similar characteristics are required to be selected from manufacturer's product line. Engineer will return submittal with options selected.

6. Samples for Verification: Submit full-size units or Samples of size indicated, prepared from same material to be used for the Work, cured and finished in manner specified, and physically identical with material or product proposed for use, and that show full range of color and texture variations expected. Samples include, but are not limited to, the following: partial sections of manufactured or fabricated components; small cuts or containers of materials; complete units of repetitively used materials; swatches showing color, texture, and pattern; color range sets; and components used for independent testing and inspection.

   a. Number of Samples: Submit two sets of Samples. Engineer will retain one Sample set; remainder will be returned.

      1) Submit a single Sample where assembly details, workmanship, fabrication techniques, connections, operation, and other similar characteristics are to be demonstrated.
      2) If variation in color, pattern, texture, or other characteristic is inherent in material or product represented by a Sample, submit at least three sets of paired units that show approximate limits of variations.

D. Product Schedule: As required in individual Specification Sections, prepare a written summary indicating types of products required for the Work and their intended location. Include the following information in tabular form:

1. Type of product. Include unique identifier for each product indicated in the Contract Documents or assigned by Contractor if none is indicated.

2. Manufacturer and product name, and model number if applicable.
3. Number and name of room or space.
4. Location within room or space.

E. Qualification Data: Prepare written information that demonstrates capabilities and experience of firm or person. Include lists of completed projects with project names and addresses, contact information of architects and owners, and other information specified.

F. Design Data: Prepare and submit written and graphic information indicating compliance with indicated performance and design criteria in individual Specification Sections. Include list of assumptions and summary of loads. Include load diagrams if applicable. Provide name and version of software, if any, used for calculations. Number each page of submittal.

G. Certificates:

1. Certificates and Certifications Submittals: Submit a statement that includes signature of entity responsible for preparing certification. Certificates and certifications shall be signed by an officer or other individual authorized to sign documents on behalf of that entity. Provide a notarized signature where indicated.
2. Contractor's Certification: Each shop drawing, working drawing, product data, and sample shall have affixed to it the following Certification Statement:

   a. "Certification Statement: by this submittal, I hereby represent that I have determined and verified all field measurements, field construction criteria, materials, dimensions, catalog numbers and similar data and I have checked and coordinated each item with other applicable approved shop drawings and all Contract requirements. "

3. Installer Certificates: Submit written statements on manufacturer's letterhead, certifying that Installer complies with requirements in the Contract Documents and, where required, is authorized by manufacturer for this specific Project.
4. Manufacturer Certificates: Submit written statements on manufacturer's letterhead, certifying that manufacturer complies with requirements in the Contract Documents. Include evidence of manufacturing experience where required.
5. Material Certificates: Submit written statements on manufacturer's letterhead certifying that material complies with requirements in the Contract Documents.
6. Product Certificates: Submit written statements on manufacturer's letterhead certifying that product complies with requirements in the Contract Documents.
7. Welding Certificates: Prepare written certification that welding procedures and personnel comply with requirements in the Contract Documents. Submit record of AWS B2.1/B2.1M on AWS forms. Include names of firms and personnel certified.

H. Test and Research Reports:

1. Compatibility Test Reports: Submit reports written by a qualified testing agency, on testing agency's standard form, indicating and interpreting results of compatibility tests performed before installation of product. Include written recommendations for substrate preparation and primers required.
2. Field Test Reports: Submit written reports indicating and interpreting results of field tests performed either during installation of product or after product is installed in its final location, for compliance with requirements in the Contract Documents.

3. Material Test Reports: Submit reports written by a qualified testing agency, on testing agency's standard form, indicating and interpreting test results of material for compliance with requirements in the Contract Documents.
4. Preconstruction Test Reports: Submit reports written by a qualified testing agency, on testing agency's standard form, indicating and interpreting results of tests performed before installation of product, for compliance with performance requirements in the Contract Documents.
5. Product Test Reports: Submit written reports indicating that current product produced by manufacturer complies with requirements in the Contract Documents. Base reports on evaluation of tests performed by manufacturer and witnessed by a qualified testing agency, or on comprehensive tests performed by a qualified testing agency.
6. Research Reports: Submit written evidence, from a model code organization acceptable to authorities having jurisdiction, that product complies with building code in effect for Project. Include the following information:

    a. Name of evaluation organization.
    b. Date of evaluation.
    c. Time period when report is in effect.
    d. Product and manufacturers' names.
    e. Description of product.
    f. Test procedures and results.
    g. Limitations of use.

1.8 DELEGATED-DESIGN SERVICES

A. Performance and Design Criteria: Where professional design services or certifications by a design professional are specifically required of Contractor by the Contract Documents, provide products and systems complying with specific performance and design criteria indicated.

    1. If criteria indicated are insufficient to perform services or certification required, submit a written request for additional information to Engineer.

B. Delegated-Design Services Certification: In addition to Shop Drawings, Product Data, and other required submittals, submit digitally signed PDF file paper copies of certificate, signed and sealed by the responsible design professional, for each product and system specifically assigned to Contractor to be designed or certified by a design professional.

    1. Indicate that products and systems comply with performance and design criteria in the Contract Documents. Include list of codes, loads, and other factors used in performing these services.

1.9 PROPOSED PRODUCT LIST

A. Within 15 days after date of Notice to Proceed, submit list of major products proposed for use, with name of manufacturer, trade name, and model number of each product.

B. For products specified only by reference standards, indicate manufacturer, trade name, model or catalog designation, and reference standards.

1.10 CONTRACTOR'S REVIEW

A. Action Submittals and Informational Submittals: Review each submittal and check for coordination with other Work of the Contract and for compliance with the Contract Documents. Note corrections and field dimensions. Mark with approval stamp before submitting to Engineer.

B. Contractor Responsible for:

1. Determination and verification of materials including manufacturer’s catalog numbers.
2. Determination and verification of field measurements and field construction criteria.
3. Checking and coordinating information in submittal with requirements of Work and of Contract Documents.
4. Determination of accuracy and completeness of dimensions and quantities.
5. Confirmation and coordination of dimensions and field conditions at Site.
6. Construction means, techniques, sequences, and procedures.
7. Safety precautions.
8. Coordination and performance of Work of all trades.
9. Other requirements enumerated in Contract Documents.

C. Contractor's Approval: Indicate Contractor's approval for each submittal with indication in web-based Project management software. Include name of reviewer, date of Contractor's approval, and statement certifying that submittal has been reviewed, checked, and approved for compliance with the Contract Documents.

1. Engineer will not review submittals received from Contractor that do not have Contractor's review and approval.

1.11 ENGINEER'S REVIEW

A. Do not make mass submittals to Engineer. If mass submittals are received, Engineer's review time stated above will be extended as necessary to perform proper review. Engineer will review mass submittals based on priority determined by Engineer after consultation with Owner and Contractor.

B. Action Submittals: Engineer will review each submittal, indicate corrections or revisions required, and return.

1. Submittals by Web-Based Project Management Software: Engineer will indicate, on Project management software website, the appropriate action.

C. Informational Submittals: Engineer will review each submittal and will not return it, or will return it if it does not comply with requirements. Engineer will forward each submittal to appropriate party.

D. Partial submittals prepared for a portion of the Work will be reviewed when use of partial submittals has received prior approval from Engineer.

E. Incomplete submittals are unacceptable, will be considered nonresponsive, and will be returned for resubmittal without review.

F. Engineer will return without review submittals received from sources other than Contractor.

G. Submittals not required by the Contract Documents will be returned by Engineer without action.

H. Shop drawings will be returned to the Contractor with one of the following codes.

1. "APPROVED" - This code is assigned when there are no notations or comments on the submittal. When returned under this code the Contractor may release the equipment and/or material for manufacture.
2. "APPROVED AS NOTED" - This code is assigned when a confirmation of the notations and comments IS NOT required by the Contractor. The Contractor may release the equipment or material for manufacture; however, all notations and comments must be incorporated into the final product.
3. "APPROVED AS NOTED/RESUBMIT" - This combination of codes is assigned when notations and comments are extensive enough to require a resubmittal of the package. The Contractor may release the equipment or material for manufacture; however, all notations and comments must be incorporated into the final product. The resubmittal is to address all comments, omissions and non-conforming items that were noted. An additional box is checked to indicate whether the resubmission is for the complete package, or for parts of the package. If no box is checked, a complete resubmittal shall be provided. Review code may designate if a partial or full submittal is required. If full submittal is required, a complete resubmittal package addressing all comments shall be provided. If a partial submittal is designated, resubmittal shall only include information pertaining to those items noted in review comments requiring clarification and any portions of submittal impacted as a result of the response. Resubmittal is to be received by the Engineer within 30 calendar days of the date of the Engineer's transmittal requiring the resubmittal.
4. "REJECTED" - This code is assigned when the submittal does not meet the intent of the Contract Documents. The Contractor must resubmit the entire package revised to bring the submittal into conformance. It may be necessary to resubmit using a different manufacturer/vendor to meet the requirements of the Contract Documents.
5. "RECEIPT ACKNOWLEDGED (Not subject to Engineer's Approval)" - This code is assigned to acknowledge receipt of a submittal that is not subject to the Engineer's approval. This code is generally used with submittals involving the Contractor’s means and methods of construction work plans, and health and safety plans.

1.12 ELECTRONIC CAD FILES OF PROJECT DRAWINGS

A. Electronic CAD Files of Project Drawings: May only be used to expedite production of Shop Drawings for the Project. Use for other Projects or purposes is not allowed.

B. Electronic CAD Files of Project Drawings: Distributed only under the following conditions:

1. Use of files is solely at receiver's risk. Engineer does not warrant accuracy of files. Receiving files in electronic form does not relieve receiver of responsibilities for measurements, dimensions, and quantities set forth in Contract Documents. In the event of ambiguity, discrepancy, or conflict between information on electronic media and that in Contract Documents, notify Engineer of discrepancy and use information in hard-copy Drawings and Specifications.

2. CAD files do not necessarily represent the latest Contract Documents, existing conditions, and as-built conditions. Receiver is responsible for determining and complying with these conditions and for incorporating addenda and modifications.
3. User is responsible for removing information not normally provided on Shop Drawings and removing references to Contract Documents. Shop Drawings submitted with information associated with other trades or with references to Contract Documents will not be reviewed and will be immediately returned.
4. Receiver shall not hold Engineer responsible for data or file clean-up required to make files usable, nor for error or malfunction in translation, interpretation, or use of this electronic information.
5. Receiver shall understand that even though Engineer has computer virus scanning software to detect presence of computer viruses, there is no guarantee that computer viruses are not present in files or in electronic media.
6. Receiver shall not hold Engineer responsible for such viruses or their consequences, and shall hold Engineer harmless against costs, losses, or damage caused by presence of computer virus in files or media.

PART 2 - PRODUCTS (NOT USED)

PART 3 - EXECUTION (NOT USED)

END OF SECTION 013300

© 2023 CDM Smith
All Rights Reserved

This page intentionally left blank.

© 2023 CDM Smith
All Rights Reserved

SECTION 014000 - QUALITY REQUIREMENTS

PART 1 - GENERAL

1.1 RELATED DOCUMENTS

A. Drawings and general provisions of the Contract, including General and Supplementary Conditions and other Division 01 Specification Sections, apply to this Section.

1.2 SUMMARY

A. Section includes administrative and procedural requirements for quality assurance and quality control.

B. Testing and inspection services are required to verify compliance with requirements specified or indicated. These services do not relieve Contractor of responsibility for compliance with the Contract Document requirements.

1. Specific quality-assurance and quality-control requirements for individual work results are specified in their respective Specification Sections. Requirements in individual Sections may also cover production of standard products.
2. Specified tests, inspections, and related actions do not limit Contractor's other quality-assurance and quality-control procedures that facilitate compliance with the Contract Document requirements.
3. Requirements for Contractor to provide quality-assurance and quality-control services required by Engineer, Owner or authorities having jurisdiction are not limited by provisions of this Section.

1.3 DEFINITIONS

A. Experienced: When used with an entity or individual, "experienced," unless otherwise further described, means having successfully completed a minimum of five previous projects similar in nature, size, and extent to this Project; being familiar with special requirements indicated; and having complied with requirements of authorities having jurisdiction.

B. Field Quality-Control Tests and Inspections: Tests and inspections that are performed on-site for installation of the Work and for completed Work.

C. Installer/Applicator/Erector: Contractor or another entity engaged by Contractor as an employee, subcontractor, or sub-subcontractor, to perform a particular construction operation, including installation, erection, application, assembly, and similar operations.

1. Use of trade-specific terminology in referring to a Work result does not require that certain construction activities specified apply exclusively to specific trade(s).

D. Preconstruction Testing: Tests and inspections performed specifically for Project before products and materials are incorporated into the Work, to verify performance or compliance

with specified criteria. Unless otherwise indicated, copies of reports of tests or inspections performed for other than the Project do not meet this definition.

E. Product Tests: Tests and inspections that are performed by a nationally recognized testing laboratory (NRTL) according to 29 CFR 1910.7, by a testing agency accredited according to NIST's National Voluntary Laboratory Accreditation Program (NVLAP), or by a testing agency qualified to conduct product testing and acceptable to authorities having jurisdiction, to establish product performance and compliance with specified requirements.

F. Source Quality-Control Tests and Inspections: Tests and inspections that are performed at the source (e.g., plant, mill, factory, or shop).

G. Testing Agency: An entity engaged to perform specific tests, inspections, or both. The term “testing laboratory” shall have the same meaning as the term “testing agency.”

H. Quality-Assurance Services: Activities, actions, and procedures performed before and during execution of the Work, to guard against defects and deficiencies and substantiate that proposed construction will comply with requirements.

I. Quality-Control Services: Tests, inspections, procedures, and related actions during and after execution of the Work, to evaluate that actual products incorporated into the Work and completed construction comply with requirements. Contractor's quality-control services do not include contract administration activities performed by Engineer.

1.4 DELEGATED-DESIGN SERVICES

A. Performance and Design Criteria: Where professional design services or certifications by a design professional are specifically required of Contractor by the Contract Documents, provide products and systems complying with specific performance and design criteria indicated.

1. If criteria indicated are not sufficient to perform services or certification required, submit a written request for additional information to Engineer.

B. Delegated-Design Services Statement: Submit a statement signed and sealed by the responsible design professional, for each product and system specifically assigned to Contractor to be designed or certified by a design professional, indicating that the products and systems are in compliance with performance and design criteria indicated. Include list of codes, loads, and other factors used in performing these services.

1.5 CONFLICTING REQUIREMENTS

A. Conflicting Standards and Other Requirements: If compliance with two or more standards or requirements is specified and the standards or requirements establish different or conflicting requirements for minimum quantities or quality levels, inform the Engineer regarding the conflict and obtain clarification prior to proceeding with the Work. Refer conflicting requirements that are different, but apparently equal, to Engineer for clarification before proceeding.

B. Minimum Quantity or Quality Levels: The quantity or quality level shown or specified shall be the minimum provided or performed. The actual installation may comply exactly with the minimum quantity or quality specified, or it may exceed the minimum within reasonable limits. To comply with these requirements, indicated numeric values are minimum or maximum, as appropriate, for the context of requirements. Refer uncertainties to Engineer for a decision before proceeding.

1.6 INFORMATIONAL SUBMITTALS

A. Contractor's Quality-Control Plan: For quality-assurance and quality-control activities and responsibilities.

B. Qualification Data: For Contractor's quality-control personnel.

C. Contractor's Statement of Responsibility: When required by authorities having jurisdiction, submit copy of written statement of responsibility submitted to authorities having jurisdiction before starting work on the following systems:

1. Seismic-force-resisting system, designated seismic system, or component listed in the Statement of Special Inspections.
2. Primary wind-force-resisting system or a wind-resisting component listed in the Statement of Special Inspections.

D. Testing Agency Qualifications: For testing agencies specified in "Quality Assurance" Article to demonstrate their capabilities and experience. Include proof of qualifications in the form of a recent report on the inspection of the testing agency by a recognized authority.

E. Schedule of Tests and Inspections: Prepare in tabular form and include the following:

1. Specification Section number and title.
2. Entity responsible for performing tests and inspections.
3. Description of test and inspection.
4. Identification of applicable standards.
5. Identification of test and inspection methods.
6. Number of tests and inspections required.
7. Time schedule or time span for tests and inspections.
8. Requirements for obtaining samples.
9. Unique characteristics of each quality-control service.

F. Reports: Prepare and submit certified written reports and documents as specified.

G. Permits, Licenses, and Certificates: For Owner's record, submit copies of permits, licenses, certifications, inspection reports, releases, jurisdictional settlements, notices, receipts for fee payments, judgments, correspondence, records, and similar documents established for compliance with standards and regulations bearing on performance of the Work.

1.7 CONTRACTOR'S QUALITY-CONTROL PLAN

A. Quality-Control Plan, General: Submit quality-control plan within 10 days of Notice of Award]. Submit in format acceptable to Engineer. Identify personnel, procedures, controls, instructions, tests, records, and forms to be used to carry out Contractor's quality-assurance and quality-control responsibilities and to coordinate Owner's quality-assurance and quality-control activities. Coordinate with Contractor's Construction Schedule.

B. Submittal Procedure: Describe procedures for ensuring compliance with requirements through review and management of submittal process. Indicate qualifications of personnel responsible for submittal review.

C. Testing and Inspection: In quality-control plan, include a comprehensive schedule of Work requiring testing or inspection, including the following:

1. Contractor-performed tests and inspections, including subcontractor-performed tests and inspections. Include required tests and inspections and Contractor-elected tests and inspections. Distinguish source quality-control tests and inspections from field quality-control tests and inspections.
2. Special inspections required by authorities having jurisdiction and indicated on the Statement of Special Inspections.
3. Owner-performed tests and inspections indicated in the Contract Documents.

D. Continuous Inspection of Workmanship: Describe process for continuous inspection during construction to identify and correct deficiencies in workmanship in addition to testing and inspection specified. Indicate types of corrective actions to be required to bring the Work into compliance with standards of workmanship established by Contract requirements and approved mockups.

E. Monitoring and Documentation: Maintain testing and inspection reports including log of approved and rejected results. Include Work Engineer has indicated as nonconforming or defective. Indicate corrective actions taken to bring nonconforming Work into compliance with requirements. Comply with requirements of authorities having jurisdiction.

1.8 REPORTS AND DOCUMENTS

A. Test and Inspection Reports: Prepare and submit certified written reports specified in other Sections. Include the following:

1. Date of issue.
2. Project title and number.
3. Name, address, telephone number, and email address of testing agency.
4. Dates and locations of samples and tests or inspections.
5. Names of individuals making tests and inspections.
6. Description of the Work and test and inspection method.
7. Identification of product and Specification Section.
8. Complete test or inspection data.
9. Test and inspection results and an interpretation of test results.
10. Record of temperature and weather conditions at time of sample-taking and testing and inspection.

11. Comments or professional opinion on whether tested or inspected Work complies with the Contract Document requirements.
12. Name and signature of laboratory inspector.
13. Recommendations on retesting and reinspecting.

B. Manufacturer's Technical Representative's Field Reports: Prepare written information documenting manufacturer's technical representative's tests and inspections specified in other Sections. Include the following:

1. Name, address, telephone number, and email address of technical representative making report.
2. Statement on condition of substrates and their acceptability for installation of product.
3. Statement that products at Project site comply with requirements.
4. Summary of installation procedures being followed, whether they comply with requirements and, if not, what corrective action was taken.
5. Results of operational and other tests and a statement of whether observed performance complies with requirements.
6. Statement of whether conditions, products, and installation will affect warranty.
7. Other required items indicated in individual Specification Sections.

C. Factory-Authorized Service Representative's Reports: Prepare written information documenting manufacturer's factory-authorized service representative's tests and inspections specified in other Sections. Include the following:

1. Name, address, telephone number, and email address of factory-authorized service representative making report.
2. Statement that equipment complies with requirements.
3. Results of operational and other tests and a statement of whether observed performance complies with requirements.
4. Statement of whether conditions, products, and installation will affect warranty.
5. Other required items indicated in individual Specification Sections.

1.9 QUALITY ASSURANCE

A. Qualifications paragraphs in this article establish the minimum qualification levels required; individual Specification Sections specify additional requirements.

B. Manufacturer Qualifications: A firm experienced in manufacturing products or systems similar to those indicated for this Project and with a record of successful in-service performance, as well as sufficient production capacity to produce required units. As applicable, procure products from manufacturers able to meet qualification requirements, warranty requirements, and technical or factory-authorized service representative requirements.

C. Fabricator Qualifications: A firm experienced in producing products similar to those indicated for this Project and with a record of successful in-service performance, as well as sufficient production capacity to produce required units.

D. Installer Qualifications: A firm or individual experienced in installing, erecting, applying, or assembling work similar in material, design, and extent to that indicated for this Project, whose work has resulted in construction with a record of successful in-service performance.

E. Professional Engineer Qualifications: A professional engineer who is legally qualified to practice in jurisdiction where Project is located and who is experienced in providing engineering services of the kind indicated. Engineering services are defined as those performed for installations of the system, assembly, or product that is similar in material, design, and extent to those indicated for this Project.

F. Specialists: Certain Specification Sections require that specific construction activities shall be performed by entities who are recognized experts in those operations. Specialists shall satisfy qualification requirements indicated and shall be engaged in the activities indicated.

1. Requirements of authorities having jurisdiction shall supersede requirements for specialists.

G. Testing and Inspecting Agency Qualifications: An NRTL, an NVLAP, or an independent agency with the experience and capability to conduct testing and inspection indicated, as documented in accordance with ASTM E329**,** and with additional qualifications specified in individual Sections; and, where required by authorities having jurisdiction, that is acceptable to authorities.

H. Manufacturer's Technical Representative Qualifications: An authorized representative of manufacturer who is trained and approved by manufacturer to observe and inspect, demonstrate, repair and perform service on installations of manufacturer's products that are similar in material, design, and extent to those indicated for this Project.

I. Factory-Authorized Service Representative Qualifications: An authorized representative of manufacturer who is trained and approved by manufacturer to inspect installation of manufacturer's products that are similar in material, design, and extent to those indicated for this Project.

1.10 QUALITY CONTROL

A. Owner Responsibilities: Where quality-control services are indicated as Owner's responsibility, Owner will engage a qualified testing agency to perform these services.

1. Owner will furnish Contractor with names, addresses, and telephone numbers of testing agencies engaged and a description of types of testing and inspection they are engaged to perform.
2. Costs for retesting and reinspecting construction that replaces or is necessitated by Work that failed to comply with the Contract Documents will be charged to Contractor.

B. Contractor Responsibilities: Tests and inspections not explicitly assigned to Owner are Contractor's responsibility. Perform additional quality-control activities, whether specified or not, to verify and document that the Work complies with requirements.

1. Unless otherwise indicated, provide quality-control services specified and those required by authorities having jurisdiction. Perform quality-control services required of Contractor by authorities having jurisdiction, whether specified or not.
2. Engage a qualified testing agency to perform quality-control services.

a. Contractor shall not employ same entity engaged by Owner, unless agreed to in writing by Owner.

3. Notify testing agencies at least 24 hours in advance of time when Work that requires testing or inspection will be performed.
4. Where quality-control services are indicated as Contractor's responsibility, submit a certified written report, in duplicate, of each quality-control service.
5. Testing and inspection requested by Contractor and not required by the Contract Documents are Contractor's responsibility.
6. Submit additional copies of each written report directly to authorities having jurisdiction, when they so direct.

C. Retesting/Reinspecting: Regardless of whether original tests or inspections were Contractor's responsibility, provide quality-control services, including retesting and reinspecting, for construction that replaced Work that failed to comply with the Contract Documents.

D. Testing Agency Responsibilities: Cooperate with Engineer and Contractor in performance of duties. Provide qualified personnel to perform required tests and inspections.

1. Notify Engineer and Contractor promptly of irregularities or deficiencies observed in the Work during performance of its services.
2. Determine the locations from which test samples will be taken and in which in-situ tests are conducted.
3. Conduct and interpret tests and inspections and state in each report whether tested and inspected Work complies with or deviates from requirements.
4. Submit a certified written report, in duplicate, of each test, inspection, and similar quality-control service through Contractor.
5. Do not release, revoke, alter, or increase the Contract Document requirements or approve or accept any portion of the Work.
6. Do not perform duties of Contractor.

E. Manufacturer's Field Services: Where indicated, engage a factory-authorized service representative to inspect field-assembled components and equipment installation, including service connections. Report results in writing as specified in Section 013300 "Submittal Procedures."

F. Manufacturer's Technical Services: Where indicated, engage a manufacturer's technical representative to observe and inspect the Work. Manufacturer's technical representative's services include participation in preinstallation conferences, examination of substrates and conditions, verification of materials, observation of Installer activities, inspection of completed portions of the Work, and submittal of written reports.

G. Contractor’s Associated Requirements and Services: Cooperate with agencies and representatives performing required tests, inspections, and similar quality-control services, and provide reasonable auxiliary services as requested. Notify agency sufficiently in advance of operations to permit assignment of personnel. Provide the following:

1. Access to the Work.
2. Incidental labor and facilities necessary to facilitate tests and inspections.
3. Adequate quantities of representative samples of materials that require testing and inspection. Assist agency in obtaining samples.

4. Facilities for storage and field curing of test samples.
5. Delivery of samples to testing agencies.
6. Preliminary design mix proposed for use for material mixes that require control by testing agency.
7. Security and protection for samples and for testing and inspection equipment at Project site.

H. Coordination: Coordinate sequence of activities to accommodate required quality-assurance and quality-control services with a minimum of delay and to avoid necessity of removing and replacing construction to accommodate testing and inspection.

1. Schedule times for tests, inspections, obtaining samples, and similar activities.

I. Schedule of Tests and Inspections: Prepare a schedule of tests, inspections, and similar quality-control services required by the Contract Documents. Coordinate and submit concurrently with Contractor's Construction Schedule. Update and submit with each Application for Payments.

1. Schedule Contents: Include tests, inspections, and quality-control services, including Contractor- and Owner-retained services, commissioning activities, and other Project-required services paid for by other entities.
2. Distribution: Distribute schedule to Owner, Engineer testing agencies, and each party involved in performance of portions of the Work where tests and inspections are required.

PART 2 - PRODUCTS (NOT USED)

PART 3 - EXECUTION

3.1 TEST AND INSPECTION LOG

A. Test and Inspection Log: Prepare a record of tests and inspections. Include the following:

1. Date test or inspection was conducted.
2. Description of the Work tested or inspected.
3. Date test or inspection results were transmitted to Engineer.
4. Identification of testing agency or special inspector conducting test or inspection.

B. Maintain log at Project site. Post changes and revisions as they occur. Provide access to test and inspection log for Engineer's and authorities' having jurisdiction reference during normal working hours.

1. Submit log at Project closeout as part of Project Record Documents.

3.2 REPAIR AND PROTECTION

A. General: On completion of testing, inspection, sample taking, and similar services, repair damaged construction and restore substrates and finishes.

1. Provide materials and comply with installation requirements specified in other Specification Sections or matching existing substrates and finishes. Restore patched areas and extend restoration into adjoining areas with durable seams that are as invisible as possible. Comply with the Contract Document requirements for cutting and patching in Section 017300 "Execution."

B. Protect construction exposed by or for quality-control service activities.

C. Repair and protection are Contractor's responsibility, regardless of the assignment of responsibility for quality-control services.

END OF SECTION 014000

This page intentionally left blank.

© 2023 CDM Smith
All Rights Reserved

SECTION 014200 - REFERENCES

PART 1 - GENERAL

1.1 RELATED DOCUMENTS

A. Drawings and general provisions of the Contract, including General and Supplementary Conditions and other Division 01 Specification Sections, apply to this Section.

1.2 DEFINITIONS

A. General: Basic Contract definitions are included in the Conditions of the Contract.

B. "Approved": When used to convey Engineer's action on Contractor's submittals, applications, and requests, "approved" is limited to Engineer's duties and responsibilities as stated in the Conditions of the Contract.

C. "Directed": A command or instruction by Engineer. Other terms including "requested," "authorized," "selected," "required," and "permitted" have the same meaning as "directed."

D. "Indicated": Requirements expressed by graphic representations or in written form on Drawings, in Specifications, and in other Contract Documents. Other terms including "shown," "noted," "scheduled," and "specified" have the same meaning as "indicated."

E. "Regulations": Laws, ordinances, statutes, and lawful orders issued by authorities having jurisdiction, and rules, conventions, and agreements within the construction industry that control performance of the Work.

F. "Furnish": Supply and deliver to Project site, ready for unloading, unpacking, assembly, installation, and similar operations.

G. "Install": Unload, temporarily store, unpack, assemble, erect, place, anchor, apply, work to dimension, finish, cure, protect, clean, and similar operations at Project site.

H. "Provide": Furnish and install, complete and ready for the intended use.

I. "Project Site": Space available for performing construction activities. The extent of Project site is shown on Drawings and may or may not be identical with the description of the land on which Project is to be built.

1.3 INDUSTRY STANDARDS

A. Applicability of Standards: Unless the Contract Documents include more stringent requirements, applicable construction industry standards have the same force and effect as if bound or copied directly into the Contract Documents to the extent referenced. Such standards are made a part of the Contract Documents by reference.

B. Publication Dates: Comply with standards in effect as of date of the Contract Documents unless otherwise indicated.

C. Copies of Standards: Each entity engaged in construction on Project should be familiar with industry standards applicable to its construction activity. Copies of applicable standards are not bound with the Contract Documents.

1. Where copies of standards are needed to perform a required construction activity, obtain copies directly from publication source.

1.4 ABBREVIATIONS AND ACRONYMS

A. Industry Organizations: Where abbreviations and acronyms are used in Specifications or other Contract Documents, they shall mean the recognized name of the entities indicated in Gale's "Encyclopedia of Associations: National Organizations of the U.S." or in Columbia Books' "National Trade & Professional Associations of the United States."

B. Industry Organizations: Where abbreviations and acronyms are used in Specifications or other Contract Documents, they shall mean the recognized name of the entities in the following list. The information in this list is subject to change and is believed to be accurate as of the date of the Contract Documents.

1. AABC - Associated Air Balance Council; www.aabc.com.
2. AAMA - American Architectural Manufacturers Association; www.aamanet.org.
3. AAPFCO - Association of American Plant Food Control Officials; www.aapfco.org.
4. AASHTO - American Association of State Highway and Transportation Officials; www.transportation.org.
5. AATCC - American Association of Textile Chemists and Colorists; www.aatcc.org.
6. ABMA - American Bearing Manufacturers Association; www.americanbearings.org.
7. ABMA - American Boiler Manufacturers Association; www.abma.com.
8. ACI - American Concrete Institute; (Formerly: ACI International); www.concrete.org
9. ACPA - American Concrete Pipe Association; www.concrete-pipe.org.
10. AEIC - Association of Edison Illuminating Companies, Inc. (The); www.aeic.org.
11. AF&PA - American Forest & Paper Association; www.afandpa.org.
12. AGA - American Gas Association; www.aga.org.
13. AGMA- American Gear Manufacturers Association, Inc.
14. AHAM - Association of Home Appliance Manufacturers; www.aham.org.
15. AHRI - Air-Conditioning, Heating, and Refrigeration Institute (The); www.ahrinet.org.
16. AI - Asphalt Institute; www.asphaltinstitute.org.
17. AIA - American Institute of Architects (The); www.aia.org.
18. AISC - American Institute of Steel Construction; www.aisc.org.
19. AISI - American Iron and Steel Institute; www.steel.org.
20. AITC - American Institute of Timber Construction; www.aitc-glulam.org.
21. AMCA - Air Movement and Control Association International, Inc.; www.amca.org.
22. ANSI - American National Standards Institute; www.ansi.org.
23. AOSA - Association of Official Seed Analysts, Inc.; www.aosaseed.com.
24. APA - APA - The Engineered Wood Association; www.apawood.org.
25. APA - Architectural Precast Association; www.archprecast.org.
26. API - American Petroleum Institute; www.api.org.
27. ARI - Air-Conditioning & Refrigeration Institute; (See AHRI).

28. ARI - American Refrigeration Institute; (See AHRI).
29. ARMA - Asphalt Roofing Manufacturers Association; www.asphaltroofing.org.
30. ASCE - American Society of Civil Engineers; www.asce.org.
31. ASCE/SEI - American Society of Civil Engineers/Structural Engineering Institute; (See ASCE).
32. ASHRAE - American Society of Heating, Refrigerating and Air-Conditioning Engineers; www.ashrae.org.
33. ASME - ASME International; (American Society of Mechanical Engineers); www.asme.org.
34. ASSE - American Society of Safety Engineers (The); www.asse.org.
35. ASSE - American Society of Sanitary Engineering; www.asse-plumbing.org.
36. ASTM - ASTM International; www.astm.org.
37. ATIS - Alliance for Telecommunications Industry Solutions; www.atis.org.
38. AWEA - American Wind Energy Association; www.awea.org.
39. AWI - Architectural Woodwork Institute; www.awinet.org.
40. AWMAC - Architectural Woodwork Manufacturers Association of Canada; www.awmac.com.
41. AWPA - American Wood Protection Association; www.awpa.com.
42. AWS - American Welding Society; www.aws.org.
43. AWWA - American Water Works Association; www.awwa.org.
44. BHMA - Builders Hardware Manufacturers Association; www.buildershardware.com.
45. BIA - Brick Industry Association (The); www.gobrick.com.
46. BICSI - BICSI, Inc.; www.bicsi.org.
47. BIFMA - BIFMA International; (Business and Institutional Furniture Manufacturer's Association); www.bifma.org.
48. BISSC - Baking Industry Sanitation Standards Committee; www.bissc.org.
49. BWF - Badminton World Federation; (Formerly: International Badminton Federation); www.bissc.org.
50. CDA - Copper Development Association; www.copper.org.
51. CE - Conformite Europeenne; http://ec.europa.eu/growth/single-market/ce-marking/
52. CEA - Canadian Electricity Association; www.electricity.ca.
53. CEA - Consumer Electronics Association; www.ce.org.
54. CFFA - Chemical Fabrics and Film Association, Inc.; www.chemicalfabricsandfilm.com.
55. CFSEI - Cold-Formed Steel Engineers Institute; www.cfsei.org.
56. CGA - Compressed Gas Association; www.cganet.com.
57. CIMA - Cellulose Insulation Manufacturers Association; www.cellulose.org.
58. CISCA - Ceilings & Interior Systems Construction Association; www.cisca.org.
59. CISPI - Cast Iron Soil Pipe Institute; www.cispi.org.
60. CLFMI - Chain Link Fence Manufacturers Institute; www.chainlinkinfo.org.
61. CPA - Composite Panel Association; www.pbmdf.com.
62. CRI - Carpet and Rug Institute (The); www.carpet-rug.org.
63. CRRC - Cool Roof Rating Council; www.coolroofs.org.
64. CRSI - Concrete Reinforcing Steel Institute; www.crsi.org.
65. CSA - CSA Group; www.csagroup.com.
66. CSA - CSA International; www.csa-international.org.
67. CSI - Construction Specifications Institute (The); www.csinet.org.
68. CSSB - Cedar Shake & Shingle Bureau; www.cedarbureau.org.
69. CTI - Cooling Technology Institute; (Formerly: Cooling Tower Institute); www.cti.org.
70. CWC - Composite Wood Council; (See CPA).
71. DASMA - Door and Access Systems Manufacturers Association; www.dasma.com.
72. DHI - Door and Hardware Institute; www.dhi.org.

73. ECA - Electronic Components Association; (See ECIA).
74. ECAMA - Electronic Components Assemblies & Materials Association; (See ECIA).
75. ECIA - Electronic Components Industry Association; www.eciaonline.org.
76. EIA - Electronic Industries Alliance; (See TIA).
77. EIMA - EIFS Industry Members Association; www.eima.com.
78. EJMA - Expansion Joint Manufacturers Association, Inc.; www.ejma.org.
79. ESD - ESD Association; (Electrostatic Discharge Association); www.esda.org .
80. ESTA - Entertainment Services and Technology Association; (See PLASA).
81. ETL - Intertek (See Intertek); www.intertek.com.
82. EVO - Efficiency Valuation Organization; www.evo-world.org.
83. FCI - Fluid Controls Institute; www.fluidcontrolsinstitute.org.
84. FIBA - Federation Internationale de Basketball; (The International Basketball Federation); www.fiba.com.
85. FIVB - Federation Internationale de Volleyball; (The International Volleyball Federation); www.fivb.org.
86. FM Approvals - FM Approvals LLC; www.fmglobal.com.
87. FM Global - FM Global; (Formerly: FMG - FM Global); www.fmglobal.com.
88. FRSA - Florida Roofing, Sheet Metal & Air Conditioning Contractors Association, Inc.; www.floridaroof.com.
89. FSA - Fluid Sealing Association; www.fluidsealing.com.
90. FSC - Forest Stewardship Council U.S.; www.fscus.org.
91. GA - Gypsum Association; www.gypsum.org.
92. GANA - Glass Association of North America; www.glasswebsite.com.
93. GS - Green Seal; www.greenseal.org.
94. HI - Hydraulic Institute; www.pumps.org.
95. HI/GAMA - Hydronics Institute/Gas Appliance Manufacturers Association; (See AHRI).
96. HMMA - Hollow Metal Manufacturers Association; (See NAAMM).
97. HPVA - Hardwood Plywood & Veneer Association; www.hpva.org.
98. HPW - H. P. White Laboratory, Inc.; www.hpwhite.com.
99. IAPSC - International Association of Professional Security Consultants; www.iapsc.org.
100. IAS - International Accreditation Service; www.iasonline.org.
101. ICBO - International Conference of Building Officials; (See ICC).
102. ICC - International Code Council; www.iccsafe.org.
103. ICEA - Insulated Cable Engineers Association, Inc.; www.icea.net.
104. ICPA - International Cast Polymer Alliance; www.icpa-hq.org.
105. ICRI - International Concrete Repair Institute, Inc.; www.icri.org.
106. IEC - International Electrotechnical Commission; www.iec.ch.
107. IEEE - Institute of Electrical and Electronics Engineers, Inc. (The); www.ieee.org.
108. IES - Illuminating Engineering Society; (Formerly: Illuminating Engineering Society of North America); www.ies.org.
109. IESNA - Illuminating Engineering Society of North America; (See IES).
110. IEST - Institute of Environmental Sciences and Technology; www.iest.org.
111. IGMA - Insulating Glass Manufacturers Alliance; www.igmaonline.org.
112. IGSHPA - International Ground Source Heat Pump Association; www.igshpa.okstate.edu.
113. ILI - Indiana Limestone Institute of America, Inc.; www.iliai.com.
114. Intertek - Intertek Group; (Formerly: ETL SEMCO; Intertek Testing Service NA); www.intertek.com.
115. ISA - International Society of Automation (The); (Formerly: Instrumentation, Systems, and Automation Society); www.isa.org.
116. ISAS - Instrumentation, Systems, and Automation Society (The); (See ISA).

117. ISFA - International Surface Fabricators Association; (Formerly: International Solid Surface Fabricators Association); www.isfanow.org.
118. ISO - International Organization for Standardization; www.iso.org.
119. ISSFA - International Solid Surface Fabricators Association; (See ISFA).
120. ITU - International Telecommunication Union; www.itu.int/home.
121. KCMA - Kitchen Cabinet Manufacturers Association; www.kcma.org.
122. LMA - Laminating Materials Association; (See CPA).
123. LPI - Lightning Protection Institute; www.lightning.org.
124. MBMA - Metal Building Manufacturers Association; www.mbma.com.
125. MCA - Metal Construction Association; www.metalconstruction.org.
126. MFMA - Maple Flooring Manufacturers Association, Inc.; www.maplefloor.org.
127. MFMA - Metal Framing Manufacturers Association, Inc.; www.metalframingmfg.org.
128. MHIA - Material Handling Industry of America; www.mhia.org.
129. MIA - Marble Institute of America; www.marble-institute.com.
130. MMPA - Moulding & Millwork Producers Association; www.wmmpa.com.
131. MPI - Master Painters Institute; www.paintinfo.com.
132. MSS - Manufacturers Standardization Society of The Valve and Fittings Industry Inc.; www.mss-hq.org.
133. NAAMM - National Association of Architectural Metal Manufacturers; www.naamm.org.
134. NACE - NACE International; (National Association of Corrosion Engineers International); www.nace.org.
135. NADCA - National Air Duct Cleaners Association; www.nadca.com.
136. NAIMA - North American Insulation Manufacturers Association; www.naima.org.
137. NBGQA - National Building Granite Quarries Association, Inc.; www.nbgqa.com.
138. NBI - New Buildings Institute; www.newbuildings.org.
139. NCAA - National Collegiate Athletic Association (The); www.ncaa.org.
140. NCMA - National Concrete Masonry Association; www.ncma.org.
141. NEBB - National Environmental Balancing Bureau; www.nebb.org.
142. NECA - National Electrical Contractors Association; www.necanet.org.
143. NeLMA - Northeastern Lumber Manufacturers Association; www.nelma.org.
144. NEMA - National Electrical Manufacturers Association; www.nema.org.
145. NETA - InterNational Electrical Testing Association; www.netaworld.org.
146. NFHS - National Federation of State High School Associations; www.nfhs.org.
147. NFPA - National Fire Protection Association; www.nfpa.org.
148. NFPA - NFPA International; (See NFPA).
149. NFRC - National Fenestration Rating Council; www.nfrc.org.
150. NHLA - National Hardwood Lumber Association; www.nhla.com.
151. NLGA - National Lumber Grades Authority; www.nlga.org.
152. NOFMA - National Oak Flooring Manufacturers Association; (See NWFA).
153. NOMMA - National Ornamental & Miscellaneous Metals Association; www.nomma.org.
154. NRCA - National Roofing Contractors Association; www.nrca.net.
155. NRMCA - National Ready Mixed Concrete Association; www.nrmca.org.
156. NSF - NSF International; www.nsf.org.
157. NSPE - National Society of Professional Engineers; www.nspe.org.
158. NSSGA - National Stone, Sand & Gravel Association; www.nssga.org.
159. NTMA - National Terrazzo & Mosaic Association, Inc. (The); www.ntma.com.
160. NWFA - National Wood Flooring Association; www.nwfa.org.
161. PCI - Precast/Prestressed Concrete Institute; www.pci.org.
162. PDI - Plumbing & Drainage Institute; www.pdionline.org.

163. PLASA - PLASA; (Formerly: ESTA - Entertainment Services and Technology Association); www.plasa.org.
164. RCSC - Research Council on Structural Connections; www.boltcouncil.org.
165. RFCI - Resilient Floor Covering Institute; www.rfci.com.
166. RIS - Redwood Inspection Service; www.redwoodinspection.com.
167. SAE - SAE International; www.sae.org.
168. SCTE - Society of Cable Telecommunications Engineers; www.scte.org.
169. SDI - Steel Deck Institute; www.sdi.org.
170. SDI - Steel Door Institute; www.steeldoor.org.
171. SEFA - Scientific Equipment and Furniture Association (The); www.sefalabs.com.
172. SEI/ASCE - Structural Engineering Institute/American Society of Civil Engineers; (See ASCE).
173. SIA - Security Industry Association; www.siaonline.org.
174. SJI - Steel Joist Institute; www.steeljoist.org.
175. SMA - Screen Manufacturers Association; www.smainfo.org.
176. SMACNA - Sheet Metal and Air Conditioning Contractors' National Association; www.smacna.org.
177. SMPTE - Society of Motion Picture and Television Engineers; www.smpte.org.
178. SPFA - Spray Polyurethane Foam Alliance; www.sprayfoam.org.
179. SPIB - Southern Pine Inspection Bureau; www.spib.org.
180. SPRI - Single Ply Roofing Industry; www.spri.org.
181. SRCC - Solar Rating & Certification Corporation; www.solar-rating.org.
182. SSINA - Specialty Steel Industry of North America; www.ssina.com.
183. SSPC - SSPC: The Society for Protective Coatings; www.sspc.org.
184. STI - Steel Tank Institute; www.steeltank.com.
185. SWI - Steel Window Institute; www.steelwindows.com.
186. SWPA - Submersible Wastewater Pump Association; www.swpa.org.
187. TCA - Tilt-Up Concrete Association; www.tilt-up.org.
188. TCNA - Tile Council of North America, Inc.; www.tileusa.com.
189. TEMA - Tubular Exchanger Manufacturers Association, Inc.; www.tema.org.
190. TIA - Telecommunications Industry Association (The); (Formerly: TIA/EIA - Telecommunications Industry Association/Electronic Industries Alliance); www.tiaonline.org.
191. TIA/EIA - Telecommunications Industry Association/Electronic Industries Alliance; (See TIA).
192. TMS - The Masonry Society; www.masonrysociety.org.
193. TPI - Truss Plate Institute; www.tpinst.org.
194. TPI - Turfgrass Producers International; www.turfgrasssod.org.
195. TRI - Tile Roofing Institute; www.tileroofing.org.
196. UL - Underwriters Laboratories Inc.; http://www.ul.com.
197. UNI - Uni-Bell PVC Pipe Association; www.uni-bell.org.
198. USAV - USA Volleyball; www.usavolleyball.org.
199. USGBC - U.S. Green Building Council; www.usgbc.org.
200. USITT - United States Institute for Theatre Technology, Inc.; www.usitt.org.
201. WA - Wallcoverings Association; www.wallcoverings.org
202. WASTEC - Waste Equipment Technology Association; www.wastec.org.
203. WCLIB - West Coast Lumber Inspection Bureau; www.wclib.org.
204. WCMA - Window Covering Manufacturers Association; www.wcmanet.org.
205. WDMA - Window & Door Manufacturers Association; www.wdma.com.
206. WI - Woodwork Institute; www.wicnet.org.
207. WSRCA - Western States Roofing Contractors Association; www.wsrca.com.

208. WWPA - Western Wood Products Association; www.wwpa.org.

C. Code Agencies: Where abbreviations and acronyms are used in Specifications or other Contract Documents, they shall mean the recognized name of the entities in the following list. This information is believed to be accurate as of the date of the Contract Documents.

1. DIN - Deutsches Institut fur Normung e.V.; www.din.de.
2. IAPMO - International Association of Plumbing and Mechanical Officials; www.iapmo.org.
3. ICC - International Code Council; www.iccsafe.org.
4. ICC-ES - ICC Evaluation Service, LLC; www.icc-es.org.

D. Federal Government Agencies: Where abbreviations and acronyms are used in Specifications or other Contract Documents, they shall mean the recognized name of the entities in the following list. Information is subject to change and is up to date as of the date of the Contract Documents.

1. COE - Army Corps of Engineers; www.usace.army.mil.
2. CPSC - Consumer Product Safety Commission; www.cpsc.gov.
3. DOC - Department of Commerce; National Institute of Standards and Technology; www.nist.gov.
4. DOD - Department of Defense; www.quicksearch.dla.mil.
5. DOE - Department of Energy; www.energy.gov.
6. EPA - Environmental Protection Agency; www.epa.gov.
7. FAA - Federal Aviation Administration; www.faa.gov.
8. FG - Federal Government Publications; www.gpo.gov/fdsys.
9. GSA - General Services Administration; www.gsa.gov.
10. HUD - Department of Housing and Urban Development; www.hud.gov.
11. LBL - Lawrence Berkeley National Laboratory; Environmental Energy Technologies Division; www.eetd.lbl.gov.
12. OSHA - Occupational Safety & Health Administration; www.osha.gov.
13. SD - Department of State; www.state.gov.
14. TRB - Transportation Research Board; National Cooperative Highway Research Program; The National Academies; www.trb.org.
15. USDA - Department of Agriculture; Agriculture Research Service; U.S. Salinity Laboratory; www.ars.usda.gov.
16. USDA - Department of Agriculture; Rural Utilities Service; www.usda.gov.
17. USDOJ - Department of Justice; Office of Justice Programs; National Institute of Justice; www.ojp.usdoj.gov.
18. USP - U.S. Pharmacopeial Convention; www.usp.org.
19. USPS - United States Postal Service; www.usps.com.

E. Standards and Regulations: Where abbreviations and acronyms are used in Specifications or other Contract Documents, they shall mean the recognized name of the standards and regulations in the following list. This information is subject to change and is believed to be accurate as of the date of the Contract Documents.

1. CFR - Code of Federal Regulations; Available from Government Printing Office; www.gpo.gov/fdsys.
2. DOD - Department of Defense; Military Specifications and Standards; Available from DLA Document Services; www.quicksearch.dla.mil.
3. DSCC - Defense Supply Center Columbus; (See FS).

4. FED-STD - Federal Standard; (See FS).
5. FS - Federal Specification; Available from DLA Document Services; www.quicksearch.dla.mil.

    a. Available from Defense Standardization Program; www.dsp.dla.mil.
    b. Available from General Services Administration; www.gsa.gov.
    c. Available from National Institute of Building Sciences/Whole Building Design Guide; www.wbdg.org.

6. MILSPEC - Military Specification and Standards; (See DOD).
7. USAB - United States Access Board; www.access-board.gov.
8. USATBCB - U.S. Architectural & Transportation Barriers Compliance Board; (See USAB).

F. State Government Agencies: Where abbreviations and acronyms are used in Specifications or other Contract Documents, they shall mean the recognized name of the entities in the following list. This information is subject to change and is believed to be accurate as of the date of the Contract Documents.

1. CBHF; State of California; Department of Consumer Affairs; Bureau of Electronic and Appliance Repair, Home Furnishings and Thermal Insulation; www.bearhfti.ca.gov.
2. CCR; California Code of Regulations; Office of Administrative Law; California Title 24 Energy Code; www.calregs.com.
3. CDHS; California Department of Health Services; (See CDPH).
4. CDPH; California Department of Public Health; Indoor Air Quality Program; www.cal-iaq.org.
5. CPUC; California Public Utilities Commission; www.cpuc.ca.gov.
6. SCAQMD; South Coast Air Quality Management District; www.aqmd.gov.
7. TFS; Texas A&M Forest Service; Sustainable Forestry and Economic Development; www.txforestservice.tamu.edu.

PART 2 - PRODUCTS (NOT USED)

PART 3 - EXECUTION (NOT USED)

END OF SECTION 014200

© 2023 CDM Smith
All Rights Reserved

SECTION 015000 - TEMPORARY FACILITIES AND CONTROLS

PART 1 - GENERAL

1.1 RELATED DOCUMENTS

A. Drawings and general provisions of the Contract, including General and Supplementary Conditions and other Division 01 Specification Sections, apply to this Section.

1.2 SUMMARY

A. Section includes requirements for temporary utilities, support facilities, and security and protection facilities.

B. Related Requirements:

1. Section CIP3 "Summary of Work" for work restrictions and limitations on utility interruptions.

1.3 USE CHARGES

A. Installation, removal, and use charges for temporary facilities shall be included in the Contract Sum unless otherwise indicated. Allow other entities engaged in the Project to use temporary services and facilities without cost, including, but not limited to, Owner's construction forces, Engineer, occupants of Project, testing agencies, and authorities having jurisdiction.

B. Sewer Service: Pay sewer-service use charges for sewer usage by all entities for construction operations.

C. Water Service: Owner will pay for water-service use charges for water used by all entities for construction operations.

D. Electric Power Service: Pay electric-power-service use charges for electricity used by all entities for construction operations.

E. Water and Sewer Service from Existing System: Water from Owner's existing water system is available for use with metering. Provide connections and extensions of services and metering as required for construction operations.

F. Contractor shall refer to Section 00700 “Standard General Conditions of the Construction Contract” regarding permanent utilities connections.

1.4 INFORMATIONAL SUBMITTALS

A. Site Utilization Plan: Show temporary facilities, temporary utility lines and connections, staging areas, construction site entrances, vehicle circulation, and parking areas for construction personnel.

B. Implementation and Termination Schedule: Within 15 days of date established for commencement of the Work, submit schedule indicating implementation and termination dates of each temporary utility.

C. Project Identification and Temporary Signs: Refer to Specification CIP 15 “Project Identification Signage.”

D. Fire-Safety Program: Show compliance with requirements of NFPA 241 and authorities having jurisdiction. Indicate Contractor personnel responsible for management of fire-prevention program.

E. Noise and Vibration Control Plan: Identify construction activities that may impact the occupancy and use of existing spaces within the building or adjacent existing buildings, whether occupied by others, or occupied by the Owner. Include the following:

1. Methods used to meet the goals and requirements of the Owner.
2. Concrete cutting method(s) to be used.
3. Location of construction devices on the site.
4. Show compliance with the use and maintenance of quieted construction devices for the duration of the Project.
5. Indicate activities that may disturb building occupants and that are planned to be performed during non-standard working hours as coordinated with the Owner.
6. Indicate locations of sensitive equipment areas or other areas requiring special attention as identified by Owner. Indicate means for complying with Owner's requirements.

1.5 QUALITY ASSURANCE

A. Temporary facilities shall comply with all applicable state and local ordinances, codes and regulations.

B. Electric Service: Comply with NECA, NEMA, and UL standards and regulations for temporary electric service. Install service to comply with NFPA 70.

C. Tests and Inspections: Arrange for authorities having jurisdiction to test and inspect each temporary utility before use. Obtain required certifications and permits.

D. Accessible Temporary Egress: Comply with applicable provisions in 2012 Texas Accessibility Standards (TAS).

1.6 PROJECT CONDITIONS

A. Temporary Use of Permanent Facilities: Engage Installer of each permanent service to assume responsibility for operation, maintenance, and protection of each permanent service during its

use as a construction facility before Owner's acceptance, regardless of previously assigned responsibilities.

PART 2 - PRODUCTS

2.1 MATERIALS

A. Temporary Chain-Link Fencing: Minimum (50-mm), (3.8-mm-) thick, galvanized-steel, chain-link fabric fencing; minimum (1.8 m) high with galvanized-steel pipe posts; minimum (60-mm-) OD line posts and (73-mm-) OD corner and pull posts, with (42-mm-) OD top rails.

B. Portable Chain-Link Fencing: Minimum (50-mm), (3.8-mm-) thick, galvanized-steel, chain-link fabric fencing; minimum (1.8 m) high with galvanized-steel pipe posts; minimum (60-mm-) OD line posts and (73-mm-) OD corner and pull posts, with (42-mm-) OD top and bottom rails. Provide concrete or galvanized-steel bases for supporting posts.

C. Dust-Control Adhesive-Surface Walk-Off Mats: Provide mats, minimum (914 by 1524 mm).

D. Insulation: Unfaced mineral-fiber blanket, manufactured from glass, slag wool, or rock wool; with maximum flame-spread and smoke-developed indexes of 25 and 50, respectively.

2.2 TEMPORARY FACILITIES

A. Field Offices: Prefabricated or mobile units with serviceable finishes, temperature controls, and foundations adequate for normal loading.

B. Storage and Fabrication Sheds: Provide sheds sized, furnished, and equipped to accommodate materials and equipment for construction operations.

1. Store combustible materials apart from building.

PART 3 - EXECUTION

3.1 TEMPORARY FACILITIES, GENERAL

A. Conservation: Coordinate construction and use of temporary facilities with consideration given to conservation of energy, water, and materials. Coordinate use of temporary utilities to minimize waste.

1. Salvage materials and equipment involved in performance of, but not actually incorporated into, the Work. See other Sections for disposition of salvaged materials that are designated as Owner's property.

3.2 INSTALLATION, GENERAL

A. Locate facilities where shown on the Drawings or where they will serve Project adequately and result in minimum interference with performance of the Work. Relocate and modify facilities as required by progress of the Work. Engineer’s trailer shall be set up and ready for occupancy within 30 days of the Notice to Proceed.

1. Locate facilities to limit site disturbance.

B. Provide each facility ready for use within 30 days of the Notice to Proceed and prior to Commencement of Work at the site. Do not remove until approved by Engineer or are replaced by authorized use of completed permanent facilities.

3.3 CONTRACTOR'S FIELD OFFICE

A. Provide a temporary field office(s) for the Contractor's use for the duration of the project. An authorized representative of the Contractor shall be present at all times while the Work is in progress. Instructions received at the Contractors field office from the Engineer shall be considered delivered to the Contractor.

B. Locate field office(s) in accordance with approved shop drawings and as directed by the Owner.

C. Establish and occupy field office within 30 days of the Notice to Proceed, unless otherwise approved by the Engineer or Owner.

3.4 TEMPORARY UTILITY INSTALLATION

A. General: Install temporary service or connect to existing service, if approved by Owner.

1. Arrange with utility company, Owner, and existing users for time when service can be interrupted, if necessary, to make connections for temporary services.

B. Sewers and Drainage: Provide temporary utilities to remove effluent lawfully.

1. Connect temporary sewers to municipal system as directed by authorities having jurisdiction.

C. Water Service: If approved, connect to Owner's existing water service facilities. Clean and maintain water service facilities in a condition acceptable to Owner. At Final Completion, restore these facilities to condition existing before initial use.

D. Sanitary Facilities: Provide temporary toilets, wash facilities, safety shower and eyewash facilities, and drinking water for use of construction personnel. Comply with requirements of authorities having jurisdiction for type, number, location, operation, and maintenance of fixtures and facilities.Temporary Heating and Cooling: Provide temporary heating and cooling required by construction activities for curing or drying of completed installations or for protecting installed construction from adverse effects of low temperatures or high humidity. Select equipment that will not have a harmful effect on completed installations or elements being installed.

1. Provide temporary dehumidification systems when required to reduce ambient and substrate moisture levels to level required to allow installation or application of finishes and their proper curing or drying.

E. Temporary Light and Power: Provide by Contractor, including 220 Volt service for welding, complete with wiring, lamps and similar equipment as required to adequately light all work areas and with sufficient power capacity to meet the project needs. Make all necessary arrangements with the local electric company for temporary electric service and pay all expenses in connection therewith.

F. Electric Power Service: Provide electric power service and distribution system of sufficient size, capacity, and power characteristics required for construction operations.

1. Install electric power service underground unless otherwise indicated.
2. Coordinate with electric utility (Pedernales Electric Co-Operative and Georgetown Electric) to connect to the existing power source. Provide all necessary metering equipment and appurtenances to make the connection.

G. Lighting: Provide temporary lighting with local switching that provides adequate illumination for construction operations, observations, inspections, and traffic conditions.

1. Install and operate temporary lighting that fulfills security and protection requirements without operating entire system.

H. Electronic Communication Service: Provide secure WiFi wireless connection to internet with provisions for access by Engineer and Owner.

3.5 SUPPORT FACILITIES INSTALLATION

A. Comply with the following:

1. Provide construction for temporary field offices, shops, and sheds located within construction area or within 30 feet of building lines that is noncombustible in accordance with ASTM E136. Comply with NFPA 241.
2. Utilize designated area within existing building for temporary field offices.
3. Maintain support facilities until Engineer schedules Final Completion inspection. Remove just before Final Completion.

B. Temporary Roads and Paved Areas: Construct and maintain temporary roads and paved areas adequate for construction operations. Locate temporary roads and paved areas within construction limits indicated on Drawings.

1. Provide dust-control treatment that is nonpolluting and nontracking. Reapply treatment as required to minimize dust.

C. Temporary Use of Planned Permanent Roads and Paved Areas: Locate temporary roads and paved areas in same location as permanent roads and paved areas. Construct and maintain temporary roads and paved areas adequate for construction operations. Extend temporary roads and paved areas, within construction limits indicated, as necessary for construction operations.

1. Coordinate elevations of temporary roads and paved areas with permanent roads and paved areas.
2. Prepare subgrade and install subbase and base for temporary roads and paved areas accordance with Section 312000 "Earthwork."
3. Recondition base after temporary use, including removing contaminated material, regrading, proofrolling, compacting, and testing.

D. Traffic Controls: Comply with requirements of authorities having jurisdiction.

1. Protect existing site improvements to remain including fences, curbs, pavement, and utilities.
2. Maintain access for fire-fighting equipment and access to fire hydrants.

E. Parking: Provide temporary parking areas for construction personnel.

F. Storage and Staging: Use designated areas of Project site for storage and staging needs.

G. Dewatering Facilities and Drains: Comply with requirements of authorities having jurisdiction. Maintain Project site, excavations, and construction free of water.

1. Dispose of rainwater in a lawful manner that will not result in flooding Project or adjoining properties or endanger permanent Work or temporary facilities.
2. Remove snow and ice as required to minimize accumulations.

H. Project Signs: Provide Project signs as indicated in Section CIP 15 “Project Identification Signage.”

I. Waste Disposal Facilities: Comply with requirements specified in Section 017419 "Construction Waste Management and Disposal."

J. Lifts and Hoists: Provide facilities necessary for hoisting materials and personnel.

1. Truck cranes and similar devices used for hoisting materials are considered "tools and equipment" and not temporary facilities.

K. Temporary Stairs: Until permanent stairs are available, provide temporary stairs where ladders are not adequate.

3.6 SECURITY AND PROTECTION FACILITIES INSTALLATION

A. Protection of Existing Facilities: Protect existing vegetation, equipment, structures, utilities, and other improvements at Project site and on adjacent properties, except those indicated to be removed or altered. Repair damage to existing facilities.

1. Where access to adjacent properties is required in order to affect protection of existing facilities, obtain written permission from adjacent property owner to access property for that purpose.

B. Environmental Protection: Provide protection, operate temporary facilities, and conduct construction as required to comply with environmental regulations and that minimize possible air, waterway, and subsoil contamination or pollution or other undesirable effects.

1. Comply with work restrictions specified in Section CIP3 "Summary of Work."

C. Temporary Erosion and Sedimentation Control: Comply with CIP9 “Environmental Protection Procedures."

D. Temporary Erosion and Sedimentation Control: Provide measures to prevent soil erosion and discharge of soil-bearing water runoff and airborne dust to undisturbed areas and to adjacent properties and walkways.

1. Verify that flows of water redirected from construction areas or generated by construction activity do not enter or cross tree- or plant-protection zones.
2. Inspect, repair, and maintain erosion- and sedimentation-control measures during construction until permanent vegetation has been established.
3. Clean, repair, and restore adjoining properties and roads affected by erosion and sedimentation from Project site during the course of Project.
4. Remove erosion and sedimentation controls and restore and stabilize areas disturbed during removal.

E. Stormwater Control: Comply with requirements of authorities having jurisdiction. Provide barriers in and around excavations and subgrade construction to prevent flooding by runoff of stormwater from heavy rains.

F. Tree and Plant Protection: Comply with requirements specified in Section 015639 "Temporary Tree and Plant Protection."

G. Pest Control: Engage pest-control service to recommend practices to minimize attraction and harboring of rodents, roaches, and other pests and to perform extermination and control procedures at regular intervals, so Project will be free of pests and their residues at Substantial Completion. Perform control operations lawfully, using materials approved by authorities having jurisdiction.

H. Site Enclosure Fence: Prior to commencing earthwork, furnish and install site enclosure fence in a manner that will prevent people from easily entering site except by entrance gates.

1. Extent of Fence: As indicated on Drawings.
2. Maintain security by limiting number of keys and restricting distribution to authorized personnel. Furnish one set of keys each to the Owner and Engineer’s Field Representative.

I. Security Enclosure and Lockup: Install temporary enclosure around partially completed areas of construction. Provide lockable entrances to prevent unauthorized entrance, vandalism, theft, and similar violations of security. Lock entrances at end of each workday.

J. Barricades, Warning Signs, and Lights: Comply with requirements of authorities having jurisdiction for erecting structurally adequate barricades, including warning signs and lighting.

K. Temporary Egress: Provide temporary egress from existing occupied facilities as indicated and as required by authorities having jurisdiction. Provide, install and maintain signage directing occupants to temporary egress.

L. Temporary Enclosures: Provide temporary enclosures for protection of construction, in progress and completed, from exposure, foul weather, other construction operations, and similar activities. Provide temporary weathertight enclosure for building exterior.

1. Where heating or cooling is needed and permanent enclosure is incomplete, insulate temporary enclosures.

3.7 MOISTURE AND MOLD CONTROL

A. Moisture and Mold Protection: Protect stored materials and installed Work in accordance with Moisture and Mold Protection Plan.

B. Exposed Construction Period: Before installation of weather barriers, when materials are subject to wetting and exposure and to airborne mold spores, protect as follows:

1. Protect porous materials from water damage.
2. Protect stored and installed material from flowing or standing water.
3. Keep porous and organic materials from coming into prolonged contact with concrete.
4. Remove standing water from decks.
5. Keep deck openings covered or dammed.

C. Partially Enclosed Construction Period: After installation of weather barriers but before full enclosure and conditioning of building, when installed materials are still subject to infiltration of moisture and ambient mold spores, protect as follows:

1. Do not load or install drywall or other porous materials or components, or items with high organic content, into partially enclosed building.
2. Keep interior spaces reasonably clean and protected from water damage.
3. Periodically collect and remove waste containing cellulose or other organic matter.
4. Discard or replace water-damaged material.
5. Do not install material that is wet.
6. Discard and replace stored or installed material that begins to grow mold.
7. Perform work in a sequence that allows wet materials adequate time to dry before enclosing the material in gypsum board or other interior finishes.

3.8 OPERATION, TERMINATION, AND REMOVAL

A. Supervision: Enforce strict discipline in use of temporary facilities. To minimize waste and abuse, limit availability of temporary facilities to essential and intended uses.

B. Maintenance: Maintain facilities in good operating condition until removal.

1. Maintain operation of temporary enclosures, heating, cooling, humidity control, ventilation, and similar facilities on a 24-hour basis where required to achieve indicated results and to avoid possibility of damage.
2. Clear snow and ice from all drives, walks and stairs to maintain safe vehicle and pedestrian access to the site and facilities as directed by the Engineer.

C. Temporary Facility Changeover: Do not change over from using temporary security and protection facilities to permanent facilities until Final Completion.

D. Termination and Removal: Remove each temporary facility when need for its service has ended, when it has been replaced by authorized use of a permanent facility, or no later than Final Completion. Complete or, if necessary, restore permanent construction that may have been delayed because of interference with temporary facility. Repair damaged Work, clean exposed surfaces, and replace construction that cannot be satisfactorily repaired.

1. Materials and facilities that constitute temporary facilities are property of Contractor. Owner reserves right to take possession of Project identification signs.
2. Remove temporary roads and paved areas not intended for or acceptable for integration into permanent construction. Where area is intended for landscape development, remove soil and aggregate fill that do not comply with requirements for fill or subsoil. Remove materials contaminated with road oil, asphalt and other petrochemical compounds, and other substances that might impair growth of plant materials or lawns. Repair or replace street paving, curbs, and sidewalks at temporary entrances, as required by authorities having jurisdiction.
3. Just prior to Final Completion, repair, renovate, and clean permanent facilities used during construction period. Comply with final cleaning requirements specified in Section 017700 "Closeout Procedures."

END OF SECTION 015000

© 2023 CDM Smith
All Rights Reserved

This page intentionally left blank.

© 2023 CDM Smith
All Rights Reserved

SECTION 015639 - TEMPORARY TREE AND PLANT PROTECTION

PART 1 - GENERAL

1.1 RELATED DOCUMENTS

A. Drawings and general provisions of the Contract, including General and Supplementary Conditions and Division 01 Specification Sections, apply to this Section.

1.2 SUMMARY

A. Section includes general protection and pruning of existing trees and plants that are affected by execution of the Work, whether temporary or permanent construction.

B. Related Requirements:

1. Section 015000 "Temporary Facilities and Controls" for temporary site fencing.
2. Section G3 "Site Clearing" for removing existing trees and shrubs.

1.3 DEFINITIONS

A. Caliper (DBH): Diameter breast height; diameter of a trunk as measured by a diameter tape or the average of the smallest and largest diameters at a height 54 inches above the ground line for trees with caliper of 8 inches or greater as measured at a height of 12 inches above the ground.

B. Plant-Protection Zone: Area surrounding individual trees, groups of trees, shrubs, or other vegetation to be protected during construction and indicated on Drawings.

C. Tree-Protection Zone: Area surrounding individual trees or groups of trees to be protected during construction, as indicated on Drawings and also defined by a circle concentric with each tree with a radius 1.5 times the diameter of the drip line unless otherwise indicated.

D. Vegetation: Trees, shrubs, groundcovers, grass, and other plants.

1.4 FIELD CONDITIONS

A. The following practices are prohibited within protection zones:

1. Storage of construction materials, debris, or excavated material.
2. Moving or parking vehicles or equipment.
3. Foot traffic.
4. Erection of sheds or structures.
5. Impoundment of water.
6. Excavation or other digging unless otherwise indicated.
7. Attachment of signs to or wrapping materials around trees or plants unless otherwise indicated.

B. Do not direct vehicle or equipment exhaust toward protection zones.

C. Prohibit heat sources, flames, ignition sources, and smoking within or near protection zones and organic mulch.

PART 2 - PRODUCTS (NOT USED)

PART 3 - EXECUTION

3.1 EXAMINATION

A. Erosion and Sedimentation Control: Examine the site to verify that temporary erosion- and sedimentation-control measures are in place. Verify that flows of water redirected from construction areas or generated by construction activity do not enter or cross protection zones.

3.2 PREPARATION

A. Locate and clearly identify trees, shrubs, and other vegetation to remain. Flag each tree trunk at 54 inches above the ground.

B. Protect tree root systems from damage caused by runoff or spillage of noxious materials while mixing, placing, or storing construction materials. Protect root systems from ponding, eroding, or excessive wetting caused by dewatering operations.

3.3 PROTECTION ZONES

A. Protection-Zone Fencing: Install protection-zone fencing along edges of protection zones before construction begins in a manner that will prevent people from easily entering protected areas. Construct fencing so as not to obstruct safe passage or visibility at vehicle intersections where fencing is located adjacent to pedestrian walkways or in close proximity to street intersections, drives, or other vehicular circulation.

B. Maintain protection zones free of weeds and trash.

C. Maintain protection-zone fencing in good condition as acceptable to Engineer and remove when construction operations are complete and equipment has been removed from the site.

1. Do not remove protection-zone fencing, even temporarily, to allow deliveries or equipment access through the protection zone.

3.4 EXCAVATION

A. General: Excavate at edge of protection zones and for trenches indicated within protection zones according to requirements in Section 312000 "Earthwork" unless otherwise indicated.

B. Trenching within Protection Zones: Where utility trenches are required within protection zones, excavate under or around tree roots by hand or with air spade, or tunnel under the roots by drilling, auger boring, or pipe jacking. Do not cut main lateral tree roots or taproots; cut only smaller roots that interfere with installation of utilities. Cut roots as required for root pruning. If excavating by hand, use narrow-tine spading forks to comb soil and expose roots.

C. Redirect roots in backfill areas where possible. If encountering large, main lateral roots, expose roots beyond excavation limits as required to bend and redirect them without breaking. If encountered immediately adjacent to location of new construction and redirection is not practical, cut roots approximately 3 inches back from new construction and as required for root pruning.

D. Do not allow exposed roots to dry out before placing permanent backfill. Provide temporary earth cover or pack with peat moss and wrap with burlap. Water and maintain in a moist condition. Temporarily support and protect roots from damage until they are permanently relocated and covered with soil.

3.5 ROOT PRUNING

A. Prune tree roots that are affected by temporary and permanent construction, as approved by local arborist. Consult local arborist and gain approval for all trees requiring root pruning prior to beginning any pruning work.

B. Root Pruning at Edge of Protection Zone: Prune tree roots 12 inches outside of the protection zone by cleanly cutting all roots to the depth of the required excavation or as approved by local arborist.

C. Root Pruning within Protection Zone: Clear and excavate by hand or with air spade to the depth of the required excavation to minimize damage to tree root systems. If excavating by hand, use narrow-tine spading forks to comb soil to expose roots. Cleanly cut roots as close to excavation as possible.

3.6 CROWN PRUNING

A. Prune branches that are affected by temporary and permanent construction as approved by local arborist. Consult local arborist and gain approval for all trees requiring crown pruning prior to beginning any pruning work.

1. Prune to remove only broken, dying, or dead branches unless otherwise indicated. Do not prune for shape unless otherwise indicated.
2. Do not remove or reduce living branches to compensate for root loss caused by damaging or cutting root system.
3. Pruning Standards: Prune trees according to ANSI A300 (Part 1).

B. Cut branches with sharp pruning instruments; do not break or chop.

C. Do not paint or apply sealants to wounds.

3.7 REGRADING

A. Lowering Grade: Where new finish grade is indicated below existing grade around trees, slope grade beyond the protection zone. Maintain existing grades within the protection zone.

B. Lowering Grade within Protection Zone: Where new finish grade is indicated below existing grade around trees, slope grade away from trees as recommended by arborist unless otherwise indicated.

   1. Root Pruning: Prune tree roots exposed by lowering the grade. Do not cut main lateral roots or taproots; cut only smaller roots. Cut roots as required for root pruning.

C. Raising Grade: Where new finish grade is indicated above existing grade around trees, slope grade beyond the protection zone. Maintain existing grades within the protection zone.

D. Minor Fill within Protection Zone: Where existing grade is 2 inches or less below elevation of finish grade, fill with backfill soil. Place backfill soil in a single uncompacted layer and hand grade to required finish elevations.

3.8 DISPOSAL OF SURPLUS AND WASTE MATERIALS

A. Disposal: Remove excess excavated material, displaced trees, trash, and debris and legally dispose of them off Owner's property.

END OF SECTION 015639

© 2023 CDM Smith
All Rights Reserved

SECTION 016000 - PRODUCT REQUIREMENTS

PART 1 - GENERAL

1.1 RELATED DOCUMENTS

A. Drawings and general provisions of the Contract, including General and Supplementary Conditions and other Division 01 Specification Sections, apply to this Section.

1.2 SUMMARY

A. Section includes administrative and procedural requirements for selection of products for use in Project; product delivery, storage, and handling; manufacturers' standard warranties on products; special warranties; and comparable products.

B. Related Requirements:

1. Section CIP3 “Summary of Work” for Contractor requirements related to Owner-furnished products.
2. Section 014200 "References" for applicable industry standards for products specified.
3. Section 017700 “Closeout Procedures” for submitting warranties.

1.3 DEFINITIONS

A. Products: Items obtained for incorporating into the Work, whether purchased for Project or taken from previously purchased stock. The term "product" includes the terms "material," "equipment," "system," and terms of similar intent.

1. Named Products: Items identified by manufacturer's product name, including make or model number or other designation shown or listed in manufacturer's published product literature that is current as of date of the Contract Documents.
2. New Products: Items that have not previously been incorporated into another project or facility. Salvaged items or items reused from other projects are not considered new products. Items that are manufactured or fabricated to include recycle contract materials are considered new products, unless indicated otherwise.
3. Comparable Product: Product by named manufacturer that is demonstrated and approved through the comparable product submittal process described in Part 2 “Comparable Products” Article, to have the indicated qualities related to type, function, dimension, in-service performance, physical properties, appearance, and other characteristics that equal or exceed those of specified product.

B. Basis-of-Design Product Specification: A specification in which a single manufacturer's product is named and accompanied by the words "basis-of-design product," including make or model number or other designation. Published attributes and characteristics of basis-of-design product establish salient characteristics of products.

1. Evaluation of Comparable Products: In addition to the basis-of-design product description, product attributes and characteristics may be listed to establish the significant qualities related to type, function, in-service performance and physical properties, weight, dimension, durability, visual characteristics, and other special features and requirements for purposes of evaluating comparable products of additional manufacturers named in the specification.

C. Subject to Compliance with Requirements: Where the phrase "Subject to compliance with requirements" introduces a product selection procedure in an individual Specification Section, provide products qualified under the specified product procedure. In the event that a named product or product by a named manufacturer does not meet the other requirements of the specifications, select another named product or product from another named manufacturer that does meet the requirements of the specifications; submit a comparable product request or substitution request, if applicable.

D. Comparable Product Request Submittal: An action submittal requesting consideration of a comparable product, including the following information:

1. Identification of basis-of-design product or fabrication or installation method to be replaced, including Specification Section number and title and Drawing numbers and titles.
2. Data indicating compliance with the requirements specified in Part 2 "Comparable Products" Article.

E. Basis-of-Design Product Specification Submittal: An action submittal complying with requirements in Section 013300 "Submittal Procedures."

1.4 QUALITY ASSURANCE

A. Compatibility of Options: If Contractor is given option of selecting between two or more products for use on Project, select product compatible with products previously selected, even if previously selected products were also options.

1. Resolution of Compatibility Disputes between Multiple Contractors:

a. Contractors are responsible for providing products and construction methods compatible with products and construction methods of other contractors.
b. If a dispute arises between the multiple contractors over concurrently selectable but incompatible products, Engineer will determine which products shall be used.

B. Identification of Products: Except for required labels and operating data, do not attach or imprint manufacturer or product names or trademarks on exposed surfaces of products or equipment that will be exposed to view in occupied spaces or on the exterior.

1. Labels: Locate required product labels and stamps on a concealed surface, or, where required for observation following installation, on a visually accessible surface that is not conspicuous.
2. Equipment Nameplates: Provide a permanent nameplate on each item of service- or power-operated equipment. Locate on a visually accessible but inconspicuous surface. Include information essential for operation, including the following:

a. Name of product and manufacturer.
b. Model and serial number.
c. Capacity.
d. Speed.
e. Ratings.

1.5 COORDINATION

A. Modify or adjust affected work as necessary to integrate work of approved comparable products and approved substitutions.

1.6 PRODUCT DELIVERY, STORAGE, AND HANDLING

A. Deliver, store, and handle products, using means and methods that will prevent damage, deterioration, and loss, including theft and vandalism. Comply with manufacturer's written instructions.

B. Delivery and Handling:

1. Schedule delivery to minimize long-term storage at Project site and to prevent overcrowding of construction spaces.
2. Coordinate delivery with installation time to ensure minimum holding time for items that are flammable, hazardous, easily damaged, or sensitive to deterioration, theft, and other losses.
3. Deliver products to Project site in an undamaged condition in manufacturer's original sealed container or other packaging system, complete with labels and instructions for handling, storing, unpacking, protecting, and installing.
4. Inspect products on delivery to determine compliance with the Contract Documents and that products are undamaged and properly protected.

C. Storage:

1. Provide a secure location and enclosure at Project site for storage of materials and equipment.
2. Store products to allow for inspection and measurement of quantity or counting of units.
3. Store materials in a manner that will not endanger Project structure.
4. Store products that are subject to damage by the elements, under cover in a weathertight enclosure above ground, with ventilation adequate to prevent condensation and with adequate protection for wind.
5. Protect foam plastic from exposure to sunlight, except to extent necessary for period of installation and concealment.
6. Comply with product manufacturer's written instructions for temperature, humidity, ventilation, and weather-protection requirements for storage.
7. Protect stored products from damage and liquids from freezing.
8. Provide a secure location and enclosure at Project site for storage of materials and equipment by Owner's construction forces. Coordinate location with Owner.

1.7 PRODUCT WARRANTIES

A. Warranties specified in other Sections shall be in addition to, and run concurrent with, other warranties required by the Contract Documents. Manufacturer's disclaimers and limitations on product warranties do not relieve Contractor of obligations under requirements of the Contract Documents.

1. Manufacturer's Warranty: Written standard warranty form furnished by individual manufacturer for a particular product and issued in the name of the Owner or endorsed by manufacturer to Owner.
2. Special Warranty: Written warranty required by the Contract Documents to provide specific rights for Owner and issued in the name of the Owner or endorsed by manufacturer to Owner.

B. Special Warranties: Prepare a written document that contains appropriate terms and identification, ready for execution.

1. Manufacturer's Standard Form: Modified to include Project-specific information and properly executed.
2. Specified Form: When specified forms are included in the Project Manual, prepare a written document, using indicated form properly executed.
3. See other Sections for specific content requirements and particular requirements for submitting special warranties.

C. Submittal Time: Comply with requirements in Section 017700 "Closeout Procedures."

PART 2 - PRODUCTS

2.1 PRODUCT SELECTION PROCEDURES

A. General Product Requirements: Provide products that comply with the Contract Documents, are undamaged and, unless otherwise indicated, are new at time of installation.

1. Provide products complete with accessories, trim, finish, fasteners, and other items needed for a complete installation and indicated use and effect.
2. Standard Products: If available, and unless custom products or nonstandard options are specified, provide standard products of types that have been produced and used successfully in similar situations on other projects.
3. Owner reserves the right to limit selection to products with warranties meeting requirements of the Contract Documents.
4. Where products are accompanied by the term "as selected," Engineer will make selection.
5. Descriptive, performance, and reference standard requirements in the Specifications establish salient characteristics of products.
6. Or Equal: For products specified by name and accompanied by the term "or equal," "or approved equal," or "or approved," comply with requirements in "Comparable Products" Article to obtain approval for use of an unnamed product.

a. Submit additional documentation required by Engineer in order to establish equivalency of proposed products. Unless otherwise indicated, evaluation of "or equal" product status is by the Engineer, whose determination is final.

B. Product Selection Procedures:

1. Sole Product: Where Specifications name a single manufacturer and product, provide the named product that complies with requirements. Comparable products or substitutions for Contractor's convenience will not be considered.

   a. Sole product may be indicated by the phrase "Subject to compliance with requirements, provide the following."

2. Sole Manufacturer/Source: Where Specifications name a single manufacturer or source, provide a product by the named manufacturer or source that complies with requirements. Comparable products or substitutions for Contractor's convenience will not be considered.

   a. Sole manufacturer/source may be indicated by the phrase "Subject to compliance with requirements, provide products by the following."

3. Limited List of Products: Where Specifications include a list of names of both manufacturers and products, provide one of the products listed that complies with requirements. Comparable products or substitutions for Contractor's convenience will not be considered.

   a. Limited list of products may be indicated by the phrase "Subject to compliance with requirements, provide one of the following."

4. Non-Limited List of Products: Where Specifications include a list of names of both available manufacturers and products, provide one of the products listed, or an unnamed product that complies with requirements.

   a. Non-limited list of products is indicated by the phrase "Subject to compliance with requirements, available products that may be incorporated in the Work include, but are not limited to, the following."
   b. Provision of an unnamed product is not considered a substitution, if the product complies with requirements.

5. Limited List of Manufacturers: Where Specifications include a list of manufacturers' names, provide a product by one of the manufacturers listed that complies with requirements. Comparable products or substitutions for Contractor's convenience will not be considered.

   a. Limited list of manufacturers is indicated by the phrase "Subject to compliance with requirements, provide products by one of the following."

6. Non-Limited List of Manufacturers: Where Specifications include a list of available manufacturers, provide a product by one of the manufacturers listed, or a product by an unnamed manufacturer that complies with requirements.

a. Non-limited list of manufacturers is indicated by the phrase "Subject to compliance with requirements, available manufacturers whose products may be incorporated in the Work include, but are not limited to, the following."
b. Provision of products of an unnamed manufacturer is not considered a substitution, if the product complies with requirements.

7. Basis-of-Design Product: Where Specifications name a product, or refer to a product indicated on Drawings, and include a list of manufacturers, provide the specified or indicated product or a comparable product by one of the other named manufacturers. Drawings and Specifications may additionally indicate sizes, profiles, dimensions, and other characteristics that are based on the product named. Comply with requirements in "Comparable Products" Article for consideration of an unnamed product by one of the other named manufacturers.

2.2 COMPARABLE PRODUCTS

A. Conditions for Consideration of Comparable Products: Engineer will consider Contractor's request for comparable product when the following conditions are satisfied. If the following conditions are not satisfied, Engineer may return requests without action, except to record noncompliance the following requirements:

1. Evidence that proposed product does not require revisions to the Contract Documents, is consistent with the Contract Documents, will produce the indicated results, and is compatible with other portions of the Work.
2. Detailed comparison of significant qualities of proposed product with those of the named basis-of-design product. Significant product qualities include attributes, such as type, function, in-service performance and physical properties, weight, dimension, durability, visual characteristics, and other specific features and requirements.
3. Evidence that proposed product provides specified warranty.
4. List of similar installations for completed projects, with project names and addresses and names and addresses of Engineers and owners, if requested.
5. Samples, if requested.

B. Engineer's Action on Comparable Products Submittal: If necessary, Engineer will request additional information or documentation for evaluation, as specified in Section 013300 "Submittal Procedures."

1. Form of Approval of Submittal: As specified in Section 013300 "Submittal Procedures."
2. Use product specified if Engineer does not issue a decision on use of a comparable product request within time allocated.

C. Submittal Requirements, Two-Step Process: Approval by the Engineer of Contractor's request for use of comparable product is not intended to satisfy other submittal requirements. Comply with specified submittal requirements.

D. Submittal Requirements, Single-Step Process: When acceptable to Engineer, incorporate specified submittal requirements of individual Specification Section in combined submittal for comparable products. Approval by the Engineer of Contractor' request for use of comparable product and of individual submittal requirements will also satisfy other submittal requirements.

© 2023 CDM Smith
All Rights Reserved

PART 3 - EXECUTION (NOT USED)

END OF SECTION 016000

This page intentionally left blank.

© 2023 CDM Smith
All Rights Reserved

SECTION 017300 - EXECUTION

PART 1 - GENERAL

1.1 RELATED DOCUMENTS

A. Drawings and general provisions of the Contract, including General and Supplementary Conditions and other Division 01 Specification Sections, apply to this Section.

1.2 SUMMARY

A. Section includes general administrative and procedural requirements governing execution of the Work, including, but not limited to, the following:

1. Construction layout.
2. Field engineering and surveying.
3. Installation of the Work.
4. Cutting and patching.
5. Coordination of Owner's portion of the Work.
6. Coordination of Owner-installed products.
7. Progress cleaning.
8. Starting and adjusting.
9. Protection of installed construction.

B. Related Requirements:

1. Section CIP3 "Summary of Work" for limits on use of Project site.
2. Section CIP10 "Submittal" and 013300 "Submittal Procedures" for submitting surveys.
3. Section 017700 "Closeout Procedures" for submitting final property survey with Project Record Documents, recording of Owner-accepted deviations from indicated lines and levels, replacing defective work, and final cleaning.

1.3 DEFINITIONS

A. Cutting: Removal of in-place construction necessary to permit installation or performance of subsequent work.

B. Patching: Fitting and repair work required to restore construction to original conditions after installation of subsequent work.

1.4 INFORMATIONAL SUBMITTALS

A. Qualification Data: For land surveyor.

B. Cutting and Patching Plan: Submit plan describing procedures at least 10 days prior to the time cutting and patching will be performed. Include the following information:

1. Extent: Describe reason for and extent of each occurrence of cutting and patching.
2. Changes to In-Place Construction: Describe anticipated results. Include changes to structural elements and operating components as well as changes in building appearance and other significant visual elements.
3. Products: List products to be used for patching and firms or entities that will perform patching work.
4. Dates: Indicate when cutting and patching will be performed.
5. Utilities and Mechanical and Electrical Systems: List services and systems that cutting and patching procedures will disturb or affect. List services and systems that will be relocated and those that will be temporarily out of service. Indicate length of time permanent services and systems will be disrupted.

    a. Include description of provisions for temporary services and systems during interruption of permanent services and systems.

C. Landfill Receipts: Submit copy of receipts issued by a landfill facility, licensed to accept hazardous materials, for hazardous waste disposal.

1.5 QUALITY ASSURANCE

A. Land Surveyor Qualifications: A professional land surveyor who is legally qualified to practice in jurisdiction where Project is located and who is experienced in providing land-surveying services of the kind indicated.

B. Professional Engineer Qualifications: Refer to Section 014000 “Quality Requirements.”

C. Cutting and Patching: Comply with requirements for and limitations on cutting and patching of construction elements.

1. Structural Elements: When cutting and patching structural elements, or when encountering the need for cutting and patching of elements, whose structural function is not known, notify Engineer of locations and details of cutting and await directions from Engineer before proceeding. Shore, brace, and support structural elements during cutting and patching. Do not cut and patch structural elements in a manner that could change their load-carrying capacity or increase deflection.
2. Operational Elements: Do not cut and patch operating elements and related components in a manner that results in reducing their capacity to perform as intended or that results in increased maintenance or decreased operational life or safety.
3. Other Construction Elements: Do not cut and patch other construction elements or components in a manner that could change their load-carrying capacity, that results in reducing their capacity to perform as intended, or that results in increased maintenance or decreased operational life or safety.
4. Visual Elements: Do not cut and patch construction in a manner that results in visual evidence of cutting and patching. Do not cut and patch exposed construction in a manner that would, in Engineer's opinion, reduce the building's aesthetic qualities. Remove and replace construction that has been cut and patched in a visually unsatisfactory manner.

D. Manufacturer's Installation Instructions: Obtain and maintain on-site manufacturer's written recommendations and instructions for installation of specified products and equipment.

PART 2 - PRODUCTS

2.1 MATERIALS

A. In-Place Materials: Use materials for patching identical to in-place materials. For exposed surfaces, use materials that visually match in-place adjacent surfaces to the fullest extent possible.

1. If identical materials are unavailable or cannot be used, use materials that, when installed, will provide a match acceptable to Engineer for the visual and functional performance of in-place materials. Use materials that are not considered hazardous.

B. Cleaning Agents: Use cleaning materials and agents recommended by manufacturer or fabricator of the surface to be cleaned. Do not use cleaning agents that are potentially hazardous to health or property or that might damage finished surfaces.

PART 3 - EXECUTION

3.1 EXAMINATION

A. Existing Conditions: The existence and location of underground and other utilities and construction indicated as existing are not guaranteed. Before beginning sitework, investigate and verify the existence and location of underground utilities, mechanical and electrical systems, and other construction affecting the Work.

1. Before construction, verify the location and invert elevation at points of connection of sanitary sewer, storm sewer, gas service piping, and water-service piping; underground electrical services; and other utilities.
2. Furnish location data for work related to Project that must be performed by public utilities serving Project site.

B. Examination and Acceptance of Conditions: Before proceeding with each component of the Work, examine substrates, areas, and conditions, with Installer or Applicator present where indicated, for compliance with requirements for installation tolerances and other conditions affecting performance. Record observations.

1. Examine roughing-in for mechanical and electrical systems to verify actual locations of connections before equipment and fixture installation.
2. Examine walls, floors, and roofs for suitable conditions where products and systems are to be installed.
3. Verify compatibility with and suitability of substrates, including compatibility with existing finishes or primers.

C. Written Report: Where a written report listing conditions detrimental to performance of the Work is required by other Sections, include the following:

1. Description of the Work, including Specification Section number and paragraphs, and Drawing sheet number and detail, where applicable.

2. List of detrimental conditions, including substrates.
3. List of unacceptable installation tolerances.
4. Recommended corrections.

D. Proceed with installation only after unsatisfactory conditions have been corrected. Proceeding with the Work indicates acceptance of surfaces and conditions.

3.2 PREPARATION

A. Existing Utility Information: Furnish information to Owner and local electric utility that is necessary to adjust, move, or relocate existing utility structures, utility poles, lines, services, or other utility appurtenances located in or affected by construction. Coordinate with authorities having jurisdiction.

B. Field Measurements: Take field measurements as required to fit the Work properly. Recheck measurements before installing each product. Where portions of the Work are indicated to fit to other construction, verify dimensions of other construction by field measurements before fabrication. Coordinate fabrication schedule with construction progress to avoid delaying the Work.

C. Space Requirements: Verify space requirements and dimensions of items shown diagrammatically on Drawings.

D. Review of Contract Documents and Field Conditions: Immediately on discovery of the need for clarification of the Contract Documents, submit a request for information (RFI) to Engineer.

3.3 CONSTRUCTION LAYOUT

A. Verification: Before proceeding to lay out the Work, verify layout information shown on Drawings, in relation to the property survey and existing benchmarks and existing conditions. If discrepancies are discovered, notify Engineer promptly.

B. Engage a land surveyor experienced in laying out the Work, using the following accepted surveying practices.

1. Establish benchmarks and control points to set lines and levels at each story of construction and elsewhere as needed to locate each element of Project.
2. Establish limits on use of Project site.
3. Establish dimensions within tolerances indicated. Do not scale Drawings to obtain required dimensions.
4. Inform installers of lines and levels to which they must comply.
5. Check the location, level and plumb, of every major element as the Work progresses.
6. Notify Engineer when deviations from required lines and levels exceed allowable tolerances.
7. Close site surveys with an error of closure equal to or less than the standard established by authorities having jurisdiction.

C. Site Improvements: Locate and lay out site improvements, including pavements, grading, fill and topsoil placement, utility slopes, and rim and invert elevations.

D. Building Lines and Levels: Locate and lay out control lines and levels for structures, building foundations, column grids, and floor levels, including those required for mechanical and electrical work. Transfer survey markings and elevations for use with control lines and levels. Level foundations and piers from two or more locations.

E. Record Log: Maintain a log of layout control work. Record deviations from required lines and levels. Include beginning and ending dates and times of surveys, weather conditions, name and duty of each survey party member, and types of instruments and tapes used. Make the log available for reference by Engineer.

3.4 FIELD ENGINEERING

A. Identification: Owner will identify existing benchmarks, control points, and property corners.

B. Reference Points: Locate existing permanent benchmarks, control points, and similar reference points before beginning the Work. Preserve and protect permanent benchmarks and control points during construction operations.

1. Do not change or relocate existing benchmarks or control points without prior written approval of Engineer. Report lost or destroyed permanent benchmarks or control points promptly. Report the need to relocate permanent benchmarks or control points to Engineer before proceeding.
2. Replace lost or destroyed permanent benchmarks and control points promptly. Base replacements on the original survey control points.

C. Benchmarks: Establish and maintain a minimum of two permanent benchmarks on Project site, referenced to data established by survey control points. Comply with authorities having jurisdiction for type and size of benchmark.

1. Record benchmark locations, with horizontal and vertical data, on Project Record Documents.
2. Where the actual location or elevation of layout points cannot be marked, provide temporary reference points sufficient to locate the Work.
3. Remove temporary reference points when no longer needed. Restore marked construction to its original condition.

3.5 INSTALLATION

A. Locate the Work and components of the Work accurately, in correct alignment and elevation, as indicated.

1. Make vertical work plumb and make horizontal work level.
2. Where space is limited, install components to maximize space available for maintenance and ease of removal for replacement.
3. Conceal pipes, ducts, and wiring in finished areas unless otherwise indicated.
4. Maintain minimum headroom clearance of 96 inches in occupied spaces and 90 inches in unoccupied spaces, unless otherwise indicated on Drawings.

B. Comply with manufacturer's written instructions and recommendations for installing products in applications indicated.

C. Install products at the time and under conditions that will ensure satisfactory results as judged by Engineer. Maintain conditions required for product performance until Substantial Completion.

D. Conduct construction operations so no part of the Work is subjected to damaging operations or loading in excess of that expected during normal conditions of occupancy of type expected for Project.

E. Sequence the Work and allow adequate clearances to accommodate movement of construction items onsite and placement in permanent locations.

F. Tools and Equipment: Select tools or equipment that minimize production of excessive noise levels.

G. Templates: Obtain and distribute to the parties involved templates for Work specified to be factory prepared and field installed. Check Shop Drawings of other portions of the Work to confirm that adequate provisions are made for locating and installing products to comply with indicated requirements.

H. Attachment: Provide blocking and attachment plates and anchors and fasteners of adequate size and number to securely anchor each component in place, accurately located and aligned with other portions of the Work. Where size and type of attachments are not indicated, verify size and type required for load conditions with manufacturer.

1. Mounting Heights: Where mounting heights are not indicated, mount components at heights directed by Engineer.
2. Allow for building movement, including thermal expansion and contraction.
3. Coordinate installation of anchorages. Furnish setting drawings, templates, and directions for installing anchorages, including sleeves, concrete inserts, anchor bolts, and items with integral anchors, that are to be embedded in concrete or masonry. Deliver such items to Project site in time for installation.

I. Joints: Make joints of uniform width. Where joint locations in exposed Work are not indicated, arrange joints for the best visual effect, as judged by Engineer. Fit exposed connections together to form hairline joints.

J. Repair or remove and replace damaged, defective, or nonconforming Work.

1. Comply with Section 017700 "Closeout Procedures" for repairing or removing and replacing defective Work.

3.6 CUTTING AND PATCHING

A. General: Employ skilled workers to perform cutting and patching. Proceed with cutting and patching at the earliest feasible time, and complete without delay.

1. Cut in-place construction to provide for installation of other components or performance of other construction, and subsequently patch as required to restore surfaces to their original condition.

B. Existing Warranties: Remove, replace, patch, and repair materials and surfaces cut or damaged during installation or cutting and patching operations, by methods and with materials so as not to void existing warranties.

C. Temporary Support: Provide temporary support of Work to be cut.

D. Protection: Protect in-place construction during cutting and patching to prevent damage. Provide protection from adverse weather conditions for portions of Project that might be exposed during cutting and patching operations.

E. Adjacent Occupied Areas: Where interference with use of adjoining areas or interruption of free passage to adjoining areas is unavoidable, coordinate cutting and patching in accordance with requirements in Section CIP3 "Summary of Work."

F. Existing Utility Services and Mechanical/Electrical Systems: Where existing services/systems are required to be removed, relocated, or abandoned, bypass such services/systems before cutting to minimize interruption to occupied areas.

G. Cutting: Cut in-place construction by sawing, drilling, breaking, chipping, grinding, and similar operations, including excavation, using methods least likely to damage elements retained or adjoining construction. If possible, review proposed procedures with original Installer; comply with original Installer's written recommendations.

1. In general, use hand or small power tools designed for sawing and grinding, not hammering and chopping. Cut holes and slots neatly to minimum size required, and with minimum disturbance of adjacent surfaces. Temporarily cover openings when not in use.
2. Finished Surfaces: Cut or drill from the exposed or finished side into concealed surfaces.
3. Concrete and Masonry: Cut using a cutting machine, such as an abrasive saw or a diamond-core drill.
4. Excavating and Backfilling: Comply with requirements in applicable Sections where required by cutting and patching operations.
5. Mechanical and Electrical Services: Cut off pipe or conduit in walls or partitions to be removed. Cap, valve, or plug and seal remaining portion of pipe or conduit to prevent entrance of moisture or other foreign matter after cutting.
6. Proceed with patching after construction operations requiring cutting are complete.

H. Patching: Patch construction by filling, repairing, refinishing, closing up, and similar operations following performance of other Work. Patch with durable seams that are as invisible as practicable, as judged by Engineer. Provide materials and comply with installation requirements specified in other Sections, where applicable.

I. Cleaning: Clean areas and spaces where cutting and patching are performed. Remove paint, mortar, oils, putty, and similar materials from adjacent finished surfaces.

3.7 PROGRESS CLEANING

A. Clean Project site and work areas daily, including common areas. Enforce requirements strictly. Dispose of materials lawfully.

1. Comply with requirements in NFPA 241 for removal of combustible waste materials and debris.
2. Do not hold waste materials more than seven days during normal weather or three days if the temperature is expected to rise above 80 deg F.
3. Containerize hazardous and unsanitary waste materials separately from other waste. Mark containers appropriately and dispose of legally, according to regulations.

    a. Use containers intended for holding waste materials of type to be stored.

4. Coordinate progress cleaning for joint-use areas where Contractor and other contractors are working concurrently.

B. Site: Maintain Project site free of waste materials and debris.

C. Work Areas: Clean areas where Work is in progress to the level of cleanliness necessary for proper execution of the Work.

1. Remove liquid spills promptly.
2. Where dust would impair proper execution of the Work, broom-clean or vacuum the entire work area, as appropriate.

D. Installed Work: Keep installed work clean. Clean installed surfaces according to written instructions of manufacturer or fabricator of product installed, using only cleaning materials specifically recommended. If specific cleaning materials are not recommended, use cleaning materials that are not hazardous to health or property and that will not damage exposed surfaces.

E. Concealed Spaces: Remove debris from concealed spaces before enclosing the space.

F. Exposed Surfaces: Clean exposed surfaces and protect as necessary to ensure freedom from damage and deterioration at time of Substantial Completion.

G. Waste Disposal: Do not bury or burn waste materials on-site. Do not wash waste materials down sewers or into waterways. Comply with waste disposal requirements in Section 017419 "Construction Waste Management and Disposal."

H. During handling and installation, clean and protect construction in progress and adjoining materials already in place. Apply protective covering where required to ensure protection from damage or deterioration at Substantial Completion.

I. Clean and provide maintenance on completed construction as frequently as necessary through the remainder of the construction period. Adjust and lubricate operable components to ensure operability without damaging effects.

J. Limiting Exposures: Supervise construction operations to ensure that no part of the construction, completed or in progress, is subject to harmful, dangerous, damaging, or otherwise deleterious exposure during the construction period.

3.8 STARTING AND ADJUSTING

A. Coordinate startup and adjusting of equipment and operating components with the manufacturer to assure proper operation.

B. Start equipment and operating components to confirm proper operation. Remove malfunctioning units, replace with new units, and retest.

C. Adjust equipment for proper operation. Adjust operating components for proper operation without binding.

D. Test each piece of equipment to verify proper operation. Test and adjust controls and safeties. Replace damaged and malfunctioning controls and equipment.

E. Manufacturer's Field Service: Comply with qualification requirements in Section 014000 "Quality Requirements."

3.9 PROTECTION AND REPAIR OF INSTALLED CONSTRUCTION

A. Provide final protection and maintain conditions that ensure installed Work is without damage or deterioration at time of Substantial Completion.

B. Repair Work previously completed and subsequently damaged during construction period Repair to like-new condition.

C. Protection of Existing Items: Provide protection and ensure that existing items to remain undisturbed by construction are maintained in condition that existed at commencement of the Work.

D. Comply with manufacturer's written instructions for temperature and relative humidity.

END OF SECTION 017300

This page intentionally left blank.

© 2023 CDM Smith
All Rights Reserved

SECTION 017419 - CONSTRUCTION WASTE MANAGEMENT AND DISPOSAL

PART 1 - GENERAL

1.1 RELATED DOCUMENTS

A. Drawings and general provisions of the Contract, including General and Supplementary Conditions and other Division 01 Specification Sections, apply to this Section.

1.2 SUMMARY

A. Section includes administrative and procedural requirements for the following:

1. Recycling nonhazardous construction waste.
2. Disposing of nonhazardous construction waste.

B. Related Requirements:

1. Section G3 "Site Clearing" for additional information.

1.3 DEFINITIONS

A. Construction Waste: Building, structure, and site improvement materials and other solid waste resulting from construction, remodeling, renovation, or repair operations. Construction waste includes packaging.

B. Demolition Waste: Building, structure, and site improvement materials resulting from demolition operations.

C. Disposal: Removal of demolition or construction waste and subsequent salvage, sale, recycling, or deposit in landfill, incinerator acceptable to authorities having jurisdiction, or designated spoil areas on Owner’s property.

D. Recycle: Recovery of demolition or construction waste for subsequent processing in preparation for reuse.

E. Salvage: Recovery of demolition or construction waste and subsequent sale or reuse in another facility.

F. Salvage and Reuse: Recovery of demolition or construction waste and subsequent incorporation into the Work.

1.4 MATERIALS OWNERSHIP

A. Unless otherwise indicated, demolition and construction waste becomes property of Contractor.

B. Historic items, relics, antiques, and similar objects including, but not limited to, cornerstones and their contents, commemorative plaques and tablets, and other items of interest or value to Owner that may be uncovered during demolition remain the property of Owner.

1. Carefully salvage in a manner to prevent damage and promptly return to Owner.

1.5 ACTION SUBMITTALS

A. Waste Management Plan: Submit plan within 30 days of date established for the Notice to Proceed.

1.6 INFORMATIONAL SUBMITTALS

A. Waste Reduction Progress Reports: Concurrent with each Application for Payment, submit report. Use Form CWM-7 for construction waste. Include the following information:

1. Material category.
2. Generation point of waste.
3. Total quantity of waste in tons.
4. Quantity of waste salvaged, both estimated and actual in tons.
5. Quantity of waste recycled, both estimated and actual in tons.
6. Total quantity of waste recovered (salvaged plus recycled) in tons.
7. Total quantity of waste recovered (salvaged plus recycled) as a percentage of total waste.

B. Waste Reduction Calculations: Before request for Substantial Completion, submit calculated end-of-Project rates for salvage, recycling, and disposal as a percentage of total waste generated by the Work.

C. Records of Donations: Indicate receipt and acceptance of salvageable waste donated to individuals and organizations. Indicate whether organization is tax exempt.

D. Records of Sales: Indicate receipt and acceptance of salvageable waste sold to individuals and organizations. Indicate whether organization is tax exempt.

1.7 QUALITY ASSURANCE

A. Waste Management Coordinator Qualifications: Experienced firm, or individual employed and assigned by General Contractor, with a record of successful waste management coordination of projects with similar requirements. Superintendent may serve as Waste Management Coordinator.

B. Regulatory Requirements: Comply with transportation and disposal regulations of authorities having jurisdiction.

C. Waste Management Conference(s): Conduct conference(s) at Project site to comply with requirements in Section 013100 "Project Management and Coordination." Review methods and procedures related to waste management including, but not limited to, the following:

1. Review and discuss waste management plan including responsibilities of each contractor and waste management coordinator.
2. Review requirements for documenting quantities of each type of waste and its disposition.
3. Review and finalize procedures for materials separation and verify availability of containers and bins needed to avoid delays.
4. Review procedures for periodic waste collection and transportation to recycling and disposal facilities.
5. Review waste management requirements for each trade.

1.8 WASTE MANAGEMENT PLAN

A. General: Develop a waste management plan according to requirements in this Section. Plan shall consist of waste identification, waste reduction work plan, and cost/revenue analysis. Distinguish between demolition and construction waste. Indicate quantities by weight or volume, but use same units of measure throughout waste management plan.

B. Waste Identification: Indicate anticipated types and quantities of demolition site-clearing and construction waste generated by the Work.

PART 2 - PRODUCTS

PART 3 - EXECUTION

3.1 PLAN IMPLEMENTATION

A. General: Implement approved waste management plan. Provide handling, containers, storage, signage, transportation, and other items as required to implement waste management plan during the entire duration of the Contract.

1. Comply with operation, termination, and removal requirements in Section 015000 "Temporary Facilities and Controls."

B. Waste Management Coordinator: Engage a waste management coordinator to be responsible for implementing, monitoring, and reporting status of waste management work plan.

C. Training: Train workers, subcontractors, and suppliers on proper waste management procedures, as appropriate for the Work.

1. Distribute waste management plan to everyone concerned within three days of submittal return.
2. Distribute waste management plan to entities when they first begin work on-site. Review plan procedures and locations established for salvage, recycling, and disposal.

D. Site Access and Temporary Controls: Conduct waste management operations to ensure minimum interference with roads, streets, walks, walkways, and other adjacent occupied and used facilities.

1. Designate and label specific areas on Project site necessary for separating materials that are to be salvaged and recycled.
2. Comply with Section 015000 "Temporary Facilities and Controls" for controlling dust and dirt, environmental protection, and noise control.

3.2 RECYCLING CONSTRUCTION WASTE, GENERAL

A. General: Recycle paper and beverage containers used by on-site workers.

B. Preparation of Waste: Prepare and maintain recyclable waste materials according to recycling or reuse facility requirements. Maintain materials free of dirt, adhesives, solvents, petroleum contamination, and other substances deleterious to the recycling process.

C. Procedures: Separate recyclable waste from other waste materials, trash, and debris. Separate recyclable waste by type at Project site to the maximum extent practical according to approved construction waste management plan.

1. Provide appropriately marked containers or bins for controlling recyclable waste until removed from Project site. Include list of acceptable and unacceptable materials at each container and bin.

    a. Inspect containers and bins for contamination and remove contaminated materials if found.

2. Remove recyclable waste from Owner's property and transport to recycling receiver or processor as often as required to prevent overfilling bins.

3.3 RECYCLING CONSTRUCTION WASTE

A. Packaging:

1. Cardboard and Boxes: Break down packaging into flat sheets. Bundle and store in a dry location.
2. Polystyrene Packaging: Separate and bag materials.
3. Pallets: As much as possible, require deliveries using pallets to remove pallets from Project site. For pallets that remain on-site, break down pallets into component wood pieces and comply with requirements for recycling wood.
4. Crates: Break down crates into component wood pieces and comply with requirements for recycling wood.

B. Wood Materials:

1. Clean Cut-Offs of Lumber: Grind or chip into small pieces.
2. Clean Sawdust: Bag sawdust that does not contain painted or treated wood.

C. Gypsum Board: Stack large clean pieces on wood pallets or in container and store in a dry location.

1. Clean Gypsum Board: Grind scraps of clean gypsum board using small mobile chipper or hammer mill. Screen out paper after grinding.

D. Paint: Seal containers and store by type.

3.4 DISPOSAL OF WASTE

A. General: Except for items or materials to be salvaged or recycled, remove waste materials from Project site and legally dispose of them in a landfill or incinerator acceptable to authorities having jurisdiction.

1. Except as otherwise specified, do not allow waste materials that are to be disposed of accumulate on-site.
2. Remove and transport debris in a manner that will prevent spillage on adjacent surfaces and areas.

B. General: Except for items or materials to be salvaged or recycled, remove waste materials and legally dispose of at designated spoil areas on Owner’s property.

C. Burning: Do not burn waste materials.

D. Burning: Burning of waste materials is permitted only at designated areas on Owner's property, provided required permits are obtained. Provide full-time monitoring for burning materials until fires are extinguished.

END OF SECTION 017419

© 2023 CDM Smith
All Rights Reserved

This page intentionally left blank.

FORM CWM-7: CONSTRUCTION WASTE REDUCTION PROGRESS REPORT								
MATERIAL CATEGORY	GENERATION POINT	TOTAL QUANTITY OF WASTE TONS (TONNES) (A)	QUANTITY OF WASTE SALVAGED		QUANTITY OF WASTE RECYCLED		TOTAL QUANTITY OF WASTE RECOVERED TONS (TONNES) (D = B + C)	TOTAL QUANTITY OF WASTE RECOVERED % (D / A x 100)
			ESTIMATED TONS (TONNES)	ACTUAL TONS (TONNES) (B)	ESTIMATED TONS (TONNES)	ACTUAL TONS (TONNES) (C)		
Packaging: Cardboard								
Packaging: Boxes								
Packaging: Plastic Sheet or Film								
Packaging: Polystyrene								
Packaging: Pallets or Skids								
Packaging: Crates								
Packaging: Paint Cans								
Packaging: Plastic Pails								
Site-Clearing Waste								
Masonry or CMU								
Lumber: Cut-Offs								
Lumber: Warped Pieces								
Plywood or OSB (scraps)								
Wood Forms								
Wood Waste Chutes								
Wood Trim (cut-offs)								
Metals								
Insulation								
Roofing								

Joint Sealant Tubes								
Gypsum Board (scraps)								
Carpet and Pad (scraps)								
Piping								
Electrical Conduit								
Other:								

Copyright 2016 - The American Institute of Architects (AIA); exclusively published and distributed by Deltek

© 2023 CDM Smith
All Rights Reserved

SECTION 017700 - CLOSEOUT PROCEDURES

PART 1 - GENERAL

1.1 RELATED DOCUMENTS

A. Drawings and general provisions of the Contract, including General and Supplementary Conditions and other Division 01 Specification Sections, apply to this Section.

1.2 SUMMARY

A. Section includes administrative and procedural requirements for Contract closeout, including, but not limited to, the following:

1. Substantial Completion procedures.
2. Final completion procedures.
3. Warranties.
4. Final cleaning.

B. Related Requirements:

1. Section CIP 14 “Project Closeout” for City requirement. This specification supplements these requirements.
2. Section 013233 "Photographic Documentation" for submitting Final Completion construction photographic documentation.
3. Section 017823 "Operation and Maintenance Data" for additional operation and maintenance manual requirements.
4. Section 017900 "Demonstration and Training" for requirements to train the Owner's maintenance personnel to adjust, operate, and maintain products, equipment, and systems.

1.3 DEFINITIONS

A. List of Incomplete Items: Contractor-prepared list of items to be completed or corrected, prepared for the Engineer’s use prior to Engineer’s inspection, to determine if the Work is substantially complete.

1.4 ACTION SUBMITTALS

A. Product Data: For each type of cleaning agent.

B. Contractor's List of Incomplete Items: Initial submittal at Substantial Completion.

C. Certified List of Incomplete Items: Final submittal at Final Completion.

1.5 CLOSEOUT SUBMITTALS

A. Certificates of Release: From authorities having jurisdiction.

B. Certificate of Insurance: For continuing coverage.

C. Field Report: For pest-control inspection.

1.6 MAINTENANCE MATERIAL SUBMITTALS

A. Schedule of Maintenance Material Items: For maintenance material submittal items required by other Sections.

1.7 SUBSTANTIAL COMPLETION PROCEDURES

A. Contractor's List of Incomplete Items: Prepare and submit a list of items to be completed and corrected (Contractor's "punch list"), indicating the value of each item on the list and reasons why the Work is incomplete.

B. Submittals Prior to Substantial Completion: Complete the following a minimum of 10 days prior to requesting inspection for determining date of Substantial Completion. List items below that are incomplete at time of request.

1. Certificates of Release: Obtain and submit releases from authorities having jurisdiction, permitting Owner unrestricted use of the Work and access to services and utilities. Include occupancy permits, operating certificates, and similar releases.
2. Submit closeout submittals specified in other Division 01 Sections, including Project Record Documents, operation and maintenance manuals, damage or settlement surveys, property surveys, and similar final record information.
3. Submit closeout submittals specified in individual Sections, including specific warranties, workmanship bonds, maintenance service agreements, final certifications, and similar documents.
4. Submit maintenance material submittals specified in individual Sections, including tools, spare parts, extra materials, and similar items, and deliver to location designated by Engineer. Label with manufacturer's name and model number.

    a. Schedule of Maintenance Material Items: Prepare and submit schedule of maintenance material submittal items, including name and quantity of each item and name and number of related Specification Section. Obtain Engineer's signature for receipt of submittals.

5. Submit testing, adjusting, and balancing records.
6. Submit sustainable design submittals not previously submitted.
7. Submit changeover information related to Owner's occupancy, use, operation, and maintenance.

C. Procedures Prior to Substantial Completion: Complete the following a minimum of 10 days prior to requesting inspection for determining date of Substantial Completion. List items below that are incomplete at time of request.

1. Advise Owner of pending insurance changeover requirements.
2. Make final changeover of permanent locks and deliver keys to Owner. Advise Owner's personnel of changeover in security provisions.
3. Complete startup and testing of systems and equipment.
4. Perform preventive maintenance on equipment used prior to Substantial Completion.
5. Instruct Owner's personnel in operation, adjustment, and maintenance of products, equipment, and systems. Submit demonstration and training video recordings specified in Section 017900 "Demonstration and Training."
6. Advise Owner of changeover in utility services.
7. Participate with Owner in conducting inspection and walkthrough with local emergency responders.
8. Terminate and remove temporary facilities from Project site, along with mockups, construction tools, and similar elements.
9. Complete final cleaning requirements.
10. Touch up paint and otherwise repair and restore marred exposed finishes to eliminate visual defects.

D. Inspection: Submit a written request for inspection to determine Substantial Completion a minimum of 10 days prior to date the Work will be completed and ready for final inspection and tests. On receipt of request, Engineer will either proceed with inspection or notify Contractor of unfulfilled requirements. Engineer will prepare the Certificate of Substantial Completion after inspection or will notify Contractor of items, either on Contractor's list or additional items identified by Engineer, that must be completed or corrected before certificate will be issued.

1. Request reinspection when the Work identified in previous inspections as incomplete is completed or corrected.
2. Results of completed inspection will form the basis of requirements for Final Completion.

1.8 FINAL COMPLETION PROCEDURES

A. Submittals Prior to Final Completion: Before requesting final inspection for determining Final Completion, complete the following:

1. Submit a final Application for Payment in accordance with Section CIP14 “Project Closeout.”
2. Certified List of Incomplete Items: Submit certified copy of Engineer's Substantial Completion inspection list of items to be completed or corrected (punch list), endorsed and dated by Engineer. Certified copy of the list shall state that each item has been completed or otherwise resolved for acceptance.
3. Certificate of Insurance: Submit evidence of final, continuing insurance coverage complying with insurance requirements.
4. Submit Final Completion photographic documentation.

B. Inspection: Submit a written request for final inspection to determine acceptance a minimum of 10 days prior to date the Work will be completed and ready for final inspection and tests. On receipt of request, Engineer will either proceed with inspection or notify Contractor of unfulfilled requirements. Engineer will prepare a final Certificate for Payment after inspection or will notify Contractor of construction that must be completed or corrected before certificate will be issued.

1. Request reinspection when the Work identified in previous inspections as incomplete is completed or corrected.

1.9 LIST OF INCOMPLETE ITEMS

A. Organization of List: Include name and identification of each space and area affected by construction operations for incomplete items and items needing correction including, if necessary, areas disturbed by Contractor that are outside the limits of construction.

1. Organize list of spaces in sequential order, starting with exterior areas first, listed by room or space number.
2. Organize items applying to each space by major element, including categories for ceilings, individual walls, floors, equipment, and building systems.
3. Include the following information at the top of each page:

    a. Project name.
    b. Date.
    c. Name of Engineer.
    d. Name of Contractor.
    e. Page number.

4. Submit list of incomplete items in the following format:

    a. MS Excel Electronic File. Engineer will return annotated file.

1.10 SUBMITTAL OF PROJECT WARRANTIES

A. Submit warranty, bond, service and maintenance contract documentation associated with the work performed.

B. Warranty period: **Two years.**
1. This supersedes the requirements from Section CIP 16. Individual section(s) of these specifications shall have precedence over that specified herein, if the stated warranty period exceeds two years.

C. Warranty period shall commence upon the issuance of a certificate of Substantial Completion by the Owner for each Phase of the project. This supersedes the requirements from Section CIP 16. Any variation from these terms must be authorized in writing by the Owner. Only Owner's written acceptance of products and equipment shall authorize the commencement of the warranty period. It shall be the Contractor's responsibility to obtain written verification from Owner of Owner's acceptance of any and all products and/or equipment associated with the project. This request shall not be made prior to Substantial Completion.

D. Provide warranty documentation within 10 calendar days of certificate of Substantial Completion issuance, or alternate acceptance date, if approved by Owner, and prior to final request for payment.

E. Assemble two (2) original signed copies of all warranties, bonds, and service and maintenance contracts, executed by each of the respective manufacturers, suppliers and subcontractors.

F. Warranty Electronic File: Provide warranties and bonds in PDF format as well. Assemble complete warranty and bond submittal package into a single electronic PDF file with bookmarks enabling navigation to each item. Provide bookmarked table of contents at beginning of document.

1. Submit by uploading to web-based project software site.

G. Provide additional copies of each warranty to include in operation and maintenance manuals.

H. Organize warranty documents into an orderly sequence based on the table of contents of Project Manual. Provide complete information for each item, including, but not limited to, the following information:
1. Product or equipment description, as installed, and including all field changes.
2. Product or equipment manufacturer and/or supplier and contact information.
3. Contractor name and contact information.
4. Time of Submittal: Submit written warranties on request of Engineer for designated portions of the Work where warranties are indicated to commence on dates other than date of Substantial Completion, or when delay in submittal of warranties might limit Owner's rights under warranty.
5. Name of entity providing warranty, bond or service and maintenance contract and contact information.
6. Terms of warranty coverage.
7. Date of warranty commencement and duration of warranty, bond, or service and maintenance contract.
8. Proper procedure for Owner's personnel to follow during warranty, bond, or service and maintenance contract period.
9. Instances which might affect validity of warranty or bond.
10. Provide a table of contents, neatly typed, in orderly sequence of all warranty, bond, or service and maintenance contract information provided.
11. Provide submittals in bound in 3-ring binders of commercial quality with cleanable plastic covers.
12. All materials shall be 8-1/2″ x 11″ (larger sheets shall be folded to fit binders) and punched to fit the 3-ring binders.

1.11 PROJECT RECORD DOCUMENTS

A. Maintain record documents as specified under Section CIP 14 “Project Closeout” CIP14.02 Record Documents inclusive of those documents specified therein and also including:

1. Field Test Records.
2. Correspondence.

B. Make available all documents to Owner's Inspector when requested.

C. Keep record drawings current.

D. Do not permanently conceal any work until required information has been recorded.

E. Label each drawing "CONSTRUCTION AS-BUILT" in neat, large, printed letters. Legibly mark drawings to record actual construction as required under CIP 14.02, Item E and also including:

1. Manufacturer, trade name, catalog number and supplier of all products and equipment actually installed.
2. Changes made by change order or field order.

F. Indicate all changes legibly in a contrasting color.

G. Delete Architect/Engineer seal from all record drawings.

H. Submit record drawings in compliance with CIP14.02, F. and accompany submittal with a transmittal letter, containing:

1. Date.
2. Project title and number.
3. Contractor's name and address.
4. Contents of submittal.
5. Certification that record drawings as submitted are complete and accurate.
6. Signature of Contractor.

PART 2 - PRODUCTS

2.1 MATERIALS

A. Cleaning Agents: Use cleaning materials and agents recommended by manufacturer or fabricator of the surface to be cleaned. Do not use cleaning agents that are potentially hazardous to health or property or that might damage finished surfaces.

PART 3 - EXECUTION

3.1 FINAL CLEANING

A. General: Perform final cleaning as required under CIP14.04 Final Cleaning.

B. Construction Waste Disposal: Comply with waste disposal requirements in Section 017419 "Construction Waste Management and Disposal."

3.2 REPAIR OF THE WORK

A. Complete repair and restoration operations required by Section 017300 “Execution” before requesting inspection for determination of Substantial Completion.

END OF SECTION 017700

© 2023 CDM Smith
All Rights Reserved

SECTION 017823 - OPERATION AND MAINTENANCE DATA

PART 1 - GENERAL

1.1 RELATED DOCUMENTS

A. Drawings and general provisions of the Contract, including General and Supplementary Conditions and other Division 01 Specification Sections, apply to this Section.

1.2 SUMMARY

A. Section includes administrative and procedural requirements for preparing operation and maintenance manuals, including the following:

1. Operation and maintenance documentation directory manuals.
2. Emergency manuals.
3. Systems and equipment operation manuals.
4. Systems and equipment maintenance manuals.
5. Product maintenance manuals.

B. Related Requirements:

1. Section 013300 "Submittal Procedures" for submitting copies of submittals for operation and maintenance manuals.
2. Section 017900 “Demonstration and Training” for training requirements.
3. Section 019113 "General Commissioning Requirements" for verification and compilation of data into operation and maintenance manuals.

1.3 DEFINITIONS

A. System: An organized collection of parts, equipment, or subsystems united by regular interaction.

B. Subsystem: A portion of a system with characteristics similar to a system.

1.4 CLOSEOUT SUBMITTALS

A. Submit operation and maintenance manuals indicated. Provide content for each manual as specified in individual Specification Sections, and as reviewed and approved at the time of Section submittals. Submit reviewed manual content formatted and organized as required by this Section.

1. Engineer will comment on whether content of operation and maintenance submittals is acceptable.
2. Where applicable, clarify and update reviewed manual content to correspond to revisions and field conditions.

B. Format: Submit operation and maintenance manuals in the following format:

1. For Draft O&M Manuals, submit by uploading to web-based project software site. Enable reviewer comments on draft submittals.
2. After approval of Final O&M Manuals, submit one paper copy and one final electronic copy.

C. Initial Manual Submittal: Submit draft copy of each manual at least 30 days before commencing demonstration and training. Engineer will comment on whether general scope and content of manual are acceptable.

D. Final Manual Submittal: Submit each manual in final form prior to requesting inspection for Substantial Completion and at least 15 days before commencing demonstration and training. Engineer will return copy with comments.

1. Correct or revise each manual to comply with Engineer's comments. Submit copies of each corrected manual within 15 days of receipt of Engineer's comments and prior to commencing demonstration and training.

E. Comply with Section 017700 "Closeout Procedures" for schedule for submitting operation and maintenance documentation.

1.5 FORMAT OF OPERATION AND MAINTENANCE MANUALS

A. Manuals, Electronic Files: Submit manuals in the form of a multiple file composite electronic PDF file for each manual type required.

1. Electronic Files: Use electronic files prepared by manufacturer where available. Where scanning of paper documents is required, configure scanned file for minimum readable file size.
2. File Names and Bookmarks: Bookmark individual documents based on file names. Name document files to correspond to system, subsystem, and equipment names used in manual directory and table of contents. Group documents for each system and subsystem into individual composite bookmarked files, then create composite manual, so that resulting bookmarks reflect the system, subsystem, and equipment names in a readily navigated file tree. Configure electronic manual to display bookmark panel on opening file.

B. Manuals, Paper Copy: Submit manuals in the form of hard-copy, bound and labeled volumes.

1. Binders: Heavy-duty, three-ring, vinyl-covered, binders, in thickness necessary to accommodate contents, sized to hold 8-1/2-by-11-inch paper; with clear plastic sleeve on spine to hold label describing contents and with pockets inside covers to hold folded oversize sheets.

a. If two or more binders are necessary to accommodate data of a system, organize data in each binder into groupings by subsystem and related components. Cross-reference other binders if necessary to provide essential information for proper operation or maintenance of equipment or system.
b. Identify each binder on front and spine, with printed title "OPERATION AND MAINTENANCE MANUAL," Project title or name, and subject matter of

contents, and indicate Specification Section number on bottom of spine. Indicate volume number for multiple-volume sets.

2. Dividers: Heavy-paper dividers with plastic-covered tabs for each section of the manual. Mark each tab to indicate contents. Include typed list of products and major components of equipment included in the section on each divider, cross-referenced to Specification Section number and title of Project Manual.
3. Protective Plastic Sleeves: Transparent plastic sleeves designed to enclose diagnostic software storage media for computerized electronic equipment. Enclose title pages and directories in clear plastic sleeves.
4. Supplementary Text: Prepared on 8-1/2-by-11-inch white bond paper.
5. Drawings: Attach reinforced, punched binder tabs on drawings and bind with text.

    a. If oversize drawings are necessary, fold drawings to same size as text pages and use as foldouts.
    b. If drawings are too large to be used as foldouts, fold and place drawings in labeled envelopes and bind envelopes in rear of manual. At appropriate locations in manual, insert typewritten pages indicating drawing titles, descriptions of contents, and drawing locations.

1.6 REQUIREMENTS FOR EMERGENCY, OPERATION, AND MAINTENANCE MANUALS

A. Organization of Manuals: Unless otherwise indicated, organize each manual into a separate section for each system and subsystem, and a separate section for each piece of equipment not part of a system. Each manual shall contain the following materials, in the order listed:

1. Title page.
2. Table of contents.
3. Manual contents.

B. Title Page: Include the following information:

1. Subject matter included in manual.
2. Name and address of Project.
3. Name and address of Owner.
4. Date of submittal.
5. Name and contact information for Contractor.
6. Name and contact information for Construction Manager.
7. Name and contact information for Engineer.
8. Name and contact information for Commissioning Authority.
9. Names and contact information for major consultants to the Engineer that designed the systems contained in the manuals.
10. Cross-reference to related systems in other operation and maintenance manuals.

C. Table of Contents: List each product included in manual, identified by product name, indexed to the content of the volume, and cross-referenced to Specification Section number in Project Manual.

1. If operation or maintenance documentation requires more than one volume to accommodate data, include comprehensive table of contents for all volumes in each volume of the set.

D. Manual Contents: Organize into sets of manageable size. Arrange contents alphabetically by system, subsystem, and equipment. If possible, assemble instructions for subsystems, equipment, and components of one system into a single binder.

E. Identification: In the documentation directory and in each operation and maintenance manual, identify each system, subsystem, and piece of equipment with same designation used in the Contract Documents. If no designation exists, assign a designation according to ASHRAE Guideline 4, "Preparation of Operating and Maintenance Documentation for Building Systems."

1.7 OPERATION AND MAINTENANCE DOCUMENTATION DIRECTORY MANUAL

A. Operation and Maintenance Documentation Directory: Prepare a separate manual that provides an organized reference to emergency, operation, and maintenance manuals. List items and their location to facilitate ready access to desired information. Include the following:

1. List of Systems and Subsystems: List systems alphabetically. Include references to operation and maintenance manuals that contain information about each system.
2. List of Equipment: List equipment for each system, organized alphabetically by system. For pieces of equipment not part of system, list alphabetically in separate list.
3. Tables of Contents: Include a table of contents for each emergency, operation, and maintenance manual.

1.8 SYSTEMS AND EQUIPMENT OPERATION MANUALS

A. Systems and Equipment Operation Manual: Assemble a complete set of data indicating operation of each system, subsystem, and piece of equipment not part of a system. Include information required for daily operation and management, operating standards, and routine and special operating procedures.

1. Engage a factory-authorized service representative to assemble and prepare information for each system, subsystem, and piece of equipment not part of a system.
2. Prepare a separate manual for each system and subsystem, in the form of an instructional manual for use by Owner's operating personnel.

B. Content: In addition to requirements in this Section, include operation data required in individual Specification Sections and the following information:

1. System, subsystem, and equipment descriptions. Use designations for systems and equipment indicated on Contract Documents.
2. Performance and design criteria if Contractor has delegated design responsibility.
3. Operating standards.
4. Operating procedures.
5. Operating logs.
6. Wiring diagrams.

7. Control diagrams.
8. Piped system diagrams.
9. Precautions against improper use.
10. License requirements including inspection and renewal dates.

C. Descriptions: Include the following:

1. Product name and model number. Use designations for products indicated on Contract Documents.
2. Manufacturer's name.
3. Equipment identification with serial number of each component.
4. Equipment function.
5. Operating characteristics.
6. Limiting conditions.
7. Performance curves.
8. Engineering data and tests.
9. Complete nomenclature and number of replacement parts.

D. Operating Procedures: Include the following, as applicable:

1. Startup procedures.
2. Equipment or system break-in procedures.
3. Routine and normal operating instructions.
4. Regulation and control procedures.
5. Instructions on stopping.
6. Normal shutdown instructions.
7. Seasonal and weekend operating instructions.
8. Required sequences for electric or electronic systems.
9. Special operating instructions and procedures.

E. Systems and Equipment Controls: Describe the sequence of operation, and diagram controls as installed.

F. Piped Systems: Diagram piping as installed, and identify color coding where required for identification.

1.9 SYSTEMS AND EQUIPMENT MAINTENANCE MANUALS

A. Systems and Equipment Maintenance Manuals: Assemble a complete set of data indicating maintenance of each system, subsystem, and piece of equipment not part of a system. Include manufacturers' maintenance documentation, preventive maintenance procedures and frequency, repair procedures, wiring and systems diagrams, lists of spare parts, and warranty information.

1. Engage a factory-authorized service representative to assemble and prepare information for each system, subsystem, and piece of equipment not part of a system.
2. Prepare a separate manual for each system and subsystem, in the form of an instructional manual for use by Owner's operating personnel.

B. Content: For each system, subsystem, and piece of equipment not part of a system, include source information, manufacturers' maintenance documentation, maintenance procedures,

maintenance and service schedules, spare parts list and source information, maintenance service contracts, and warranties and bonds as described below.

C. Source Information: List each system, subsystem, and piece of equipment included in manual, identified by product name and arranged to match manual's table of contents. For each product, list name, address, and telephone number of Installer or supplier and maintenance service agent, and cross-reference Specification Section number and title in Project Manual and drawing or schedule designation or identifier where applicable.

D. Manufacturers' Maintenance Documentation: Include the following information for each component part or piece of equipment:

1. Standard maintenance instructions and bulletins; include only sheets pertinent to product or component installed. Mark each sheet to identify each product or component incorporated into the Work. If data include more than one item in a tabular format, identify each item using appropriate references from the Contract Documents. Identify data applicable to the Work and delete references to information not applicable.

    a. Prepare supplementary text if manufacturers' standard printed data are not available and where the information is necessary for proper operation and maintenance of equipment or systems.

2. Drawings, diagrams, and instructions required for maintenance, including disassembly and component removal, replacement, and assembly.
3. Identification and nomenclature of parts and components.
4. List of items recommended to be stocked as spare parts.

E. Maintenance Procedures: Include the following information and items that detail essential maintenance procedures:

1. Test and inspection instructions.
2. Troubleshooting guide.
3. Precautions against improper maintenance.
4. Disassembly; component removal, repair, and replacement; and reassembly instructions.
5. Aligning, adjusting, and checking instructions.
6. Demonstration and training video recording, if available.

F. Maintenance and Service Schedules: Include service and lubrication requirements, list of required lubricants for equipment, and separate schedules for preventive and routine maintenance and service with standard time allotment.

1. Scheduled Maintenance and Service: Tabulate actions for daily, weekly, monthly, quarterly, semiannual, and annual frequencies.
2. Maintenance and Service Record: Include manufacturers' forms for recording maintenance.

G. Spare Parts List and Source Information: Include lists of replacement and repair parts, with parts identified and cross-referenced to manufacturers' maintenance documentation and local sources of maintenance materials and related services.

H. Maintenance Service Contracts: Include copies of maintenance agreements with name and telephone number of service agent.

I. Warranties and Bonds: Include copies of warranties and bonds and lists of circumstances and conditions that would affect validity of warranties or bonds.

1. Include procedures to follow and required notifications for warranty claims.

J. Drawings: Prepare drawings supplementing manufacturers' printed data to illustrate the relationship of component parts of equipment and systems and to illustrate control sequence and flow diagrams. Coordinate these drawings with information contained in record Drawings to ensure correct illustration of completed installation.

1. Do not use original project record documents as part of maintenance manuals.

1.10 PRODUCT MAINTENANCE MANUALS

A. Product Maintenance Manual: Assemble a complete set of maintenance data indicating care and maintenance of each product, material, and finish incorporated into the Work.

B. Content: Organize manual into a separate section for each product, material, and finish. Include source information, product information, maintenance procedures, repair materials and sources, and warranties and bonds, as described below.

C. Source Information: List each product included in manual, identified by product name and arranged to match manual's table of contents. For each product, list name, address, and telephone number of Installer or supplier and maintenance service agent, and cross-reference Specification Section number and title in Project Manual and drawing or schedule designation or identifier where applicable.

D. Product Information: Include the following, as applicable:

1. Product name and model number.
2. Manufacturer's name.
3. Color, pattern, and texture.
4. Material and chemical composition.
5. Reordering information for specially manufactured products.

E. Maintenance Procedures: Include manufacturer's written recommendations and the following:

1. Inspection procedures.
2. Types of cleaning agents to be used and methods of cleaning.
3. List of cleaning agents and methods of cleaning detrimental to product.
4. Schedule for routine cleaning and maintenance.
5. Repair instructions.

F. Repair Materials and Sources: Include lists of materials and local sources of materials and related services.

G. Warranties and Bonds: Include copies of warranties and bonds and lists of circumstances and conditions that would affect validity of warranties or bonds.

1. Include procedures to follow and required notifications for warranty claims.

PART 2 - PRODUCTS (NOT USED)

PART 3 - EXECUTION

3.1 SUBMITTAL SCHEDULE

A. Deliver operation and maintenance manuals directly to the office of the Engineer, as follows:

1. Provide preliminary copies of each manual to the office of the Engineer, no later than 30 days following approval of the respective shop drawings.
2. Provide final copies of each completed manual prior to testing.
3. Provide a letter that grants the Engineer and Owner to the limited right to use and reproduce each manual (in it its entirety or any portion thereof) from the respective equipment manufacturer(s). Such limited right shall allow the Engineer and Owner to use
3. each manual or and portion thereof for:

a. The potential assembly of a comprehensive facility operation and maintenance manual for the sole benefit of the Owner.
b. Supplemental training of the Owner's personnel and operators, over and above the required vendor's training, regarding operation of the facility as a system.

4. For each submitted manual, complete and submit the O&M Manual Review Checklist, appended to this Section.

B. The Engineer will review Operation and Maintenance manuals submittals for operating equipment for conformance with the requirements of the applicable specification Section. The review will generally be based on the O&M Manual Review Checklist appended to this Section.

C. If during test and start-up of equipment, any changes were made to the equipment, provide two hard copies of as-built drawings or any other amendments for insertion, by the contractor, in the previously transmitted final manuals. In addition, provide one revised electronic version including the as-built drawings and any other amendments. The manuals shall be completed, including updates, if any, within 30 days of start-up and testing of the facility.

D. As applicable, complete and submit the Equipment Manufacturer’s Certificate of Installation Testing and Instruction, appended to this Section, within 30 days after final inspection and plant start-up testing.

3.2 VENDOR TRAINING/INSTRUCTIONS (TO OWNER's PERSONNEL)
A. Refer to Section 017900 “Demonstration and Training” for requirements.

3.3 ATTACHMENTS

A. Equipment Manufacturer's Certificate of Installation Testing and Instruction form.

END OF SECTION 017823

© 2023 CDM Smith
All Rights Reserved

This page intentionally left blank.

© 2023 CDM Smith
All Rights Reserved

EQUIPMENT MANUFACTURER'S CERTIFICATE
OF INSTALLATION TESTING AND INSTRUCTION

Owner: _____

Project: _____

Contract No.: _____

CDM No.: _____

EQUIPMENT SPECIFICATION SECTION _____

EQUIPMENT DESCRIPTION _____

I, _____, Authorized representative of
(PRINT NAME)

_____
(PRINT MANUFACTURER'S NAME)

hereby CERTIFY that _____
(PRINT EQUIPMENT NAME AND MODEL WITH SERIAL NO.)

installed for the subject project [has] [have] been installed in a satisfactory manner, [has] [have] been satisfactorily tested, [is] [are] ready for operation, and that Owner assigned operating personnel have been suitably instructed in the operation, lubrication, and care of the unit[s] on Date: _____ Time: _____.

CERTIFIED BY: _____ DATE: _____
(SIGNATURE OF MANUFACTURER'S REPRESENTATIVE)

OWNER'S ACKNOWLEDGMENT OF MANUFACTURER'S INSTRUCTION

[I] [We] the undersigned, authorized representatives of the _____ and/or Plant Operating Personnel have received classroom and hands on instruction on the operation, lubrication, and maintenance of the subject equipment and [am] [are] prepared to assume normal operational responsibility for the equipment:

_____ DATE: _____

_____ DATE: _____

_____ DATE: _____

© 2023 CDM Smith
All Rights Reserved

O&M Manual Review Checklist

Submittal No.: _____

Project No.: _____

Manufacturer: _____

Equipment Submitted: _____

Specification Section: _____

Date of Submittal:

	General Data	
1.	Are the area representative's name, address, e-mail address and telephone number included?	
2.	Is the nameplate data for each component included?	
3.	Are all associated components related to the specific equipment included?	
4.	Is non-pertinent data crossed out or deleted?	
5.	Are drawings neatly folded and/or inserted into packets?	
6.	Are all pages properly aligned and scanned legibly?	
7.	Is the .PDF document bookmarked according to the table of contents?	
Operations and Maintenance Data		
8.	Is an overview description of the equipment and/or process included?	
9.	Does the description include the practical theory of operation?	
10.	Does each equipment component include specific details (design characteristics, operating parameters, control descriptions, and selector switch positions and functions)?	
11.	Are alarm and shutdown conditions specific to the equipment provided on this project clearly identified? Does it describe possible causes and recommended remedies?	
12.	Are step procedures for starting, stopping, and troubleshooting specific to the equipment provided included?	
13.	Is a list of operational parameters to monitor and record specific to the equipment provided included?	
14.	Is a proposed operating log sheet specific to the equipment provided included?	
15.	Is a spare parts inventory list included for each component?	
16.	Is a lubrication schedule for each component specific to the equipment provided included - or does it clearly state “No Lubrication Required"?	
17.	Is a maintenance schedule for each component specific to the equipment provided included?	
18..	Is a copy of the warranty information included?	

© 2023 CDM Smith
All Rights Reserved

SECTION 017900 - DEMONSTRATION AND TRAINING

PART 1 - GENERAL

1.1 RELATED DOCUMENTS

A. Drawings and general provisions of the Contract, including General and Supplementary Conditions and other Division 01 Specification Sections, apply to this Section.

1.2 SUMMARY

A. Section includes administrative and procedural requirements for instructing Owner's personnel, including the following:

1. Instruction in operation and maintenance of systems, subsystems, and equipment.
2. Demonstration and training video recordings.

1.3 INFORMATIONAL SUBMITTALS

A. Instruction Program: Submit outline of instructional program for demonstration and training, including a list of training modules and a schedule of proposed dates, times, length of instruction time, and instructors' names for each training module. Include learning objective and outline for each training module.

1. Indicate proposed training modules using manufacturer-produced demonstration and training video recordings for systems, equipment, and products in lieu of video recording of live instructional module.

B. Qualification Data: For facilitator and videographer.

C. Attendance Record: For each training module, submit list of participants and length of instruction time.

D. Evaluations: For each participant and for each training module, submit results and documentation of performance-based test.

1.4 CLOSEOUT SUBMITTALS

A. Demonstration and Training Video Recordings: Submit two copies within seven days of end of each training module.

1. Identification: On each copy, provide an applied label with the following information:

a. Name of Project.
b. Name and address of videographer.
c. Name of Engineer.

d. Name of Contractor.
e. Date of video recording.

2. Transcript: Prepared and bound in format matching operation and maintenance manuals. Mark appropriate identification on front and spine of each binder. Include a cover sheet with same label information as the corresponding video recording. Include name of Project and date of video recording on each page.
3. Transcript: Prepared in PDF electronic format. Include a cover sheet with same label information as the corresponding video recording and a table of contents with links to corresponding training components. Include name of Project and date of video recording on each page.
4. At completion of training, submit complete training manual(s) for Owner's use prepared in same PDF file format required for operation and maintenance manuals specified in Section 017823 "Operation and Maintenance Data."

1.5 QUALITY ASSURANCE

A. Facilitator Qualifications: A firm or individual experienced in training or educating maintenance personnel in a training program similar in content and extent to that indicated for this Project, and whose work has resulted in training or education with a record of successful learning performance.

B. Instructor Qualifications: A factory-authorized service representative, complying with requirements in Section 014000 "Quality Requirements," experienced in operation and maintenance procedures and training.

C. Videographer Qualifications: A professional videographer who is experienced photographing demonstration and training events similar to those required.

D. Pre-instruction Conference: Conduct conference at Project site to comply with requirements in Section 013100 "Project Management and Coordination." Review methods and procedures related to demonstration and training including, but not limited to, the following:

1. Inspect and discuss locations and other facilities required for instruction.
2. Review and finalize instruction schedule and verify availability of educational materials, instructors' personnel, audiovisual equipment, and facilities needed to avoid delays.
3. Review required content of instruction.
4. For instruction that must occur outside, review weather and forecasted weather conditions and procedures to follow if conditions are unfavorable.

1.6 COORDINATION

A. Coordinate instruction schedule with Owner's operations. Adjust schedule as required to minimize disrupting Owner's operations and to ensure availability of Owner's personnel.

B. Coordinate instructors, including providing notification of dates, times, length of instruction time, and course content.

C. Coordinate content of training modules with content of approved emergency, operation, and maintenance manuals. Do not submit instruction program until operation and maintenance data have been reviewed and approved by Engineer.

1.7 INSTRUCTION PROGRAM

A. Program Structure: Develop an instruction program that includes individual training modules for each system and for equipment not part of a system, as required by individual Specification Sections.

B. Training Modules: Develop a learning objective and teaching outline for each module. Include a description of specific skills and knowledge that participant is expected to master. For each module, include instruction for the following as applicable to the system, equipment, or component:

1. Basis of System Design, Operational Requirements, and Criteria: Include the following:

    a. System, subsystem, and equipment descriptions.
    b. Performance and design criteria if Contractor is delegated design responsibility.
    c. Operating standards.
    d. Regulatory requirements.
    e. Equipment function.
    f. Operating characteristics.
    g. Limiting conditions.
    h. Performance curves.

2. Documentation: Review the following items in detail:

    a. Emergency manuals.
    b. Systems and equipment operation manuals.
    c. Systems and equipment maintenance manuals.
    d. Product maintenance manuals.
    e. Project Record Documents.
    f. Identification systems.
    g. Warranties and bonds.
    h. Maintenance service agreements and similar continuing commitments.

3. Emergencies: Include the following, as applicable:

    a. Instructions on meaning of warnings, trouble indications, and error messages.
    b. Instructions on stopping.
    c. Shutdown instructions for each type of emergency.
    d. Operating instructions for conditions outside of normal operating limits.
    e. Sequences for electric or electronic systems.
    f. Special operating instructions and procedures.

4. Operations: Include the following, as applicable:

    a. Startup procedures.
    b. Equipment or system break-in procedures.

c. Routine and normal operating instructions.
d. Regulation and control procedures.
e. Control sequences.
f. Safety procedures.
g. Instructions on stopping.
h. Normal shutdown instructions.
i. Operating procedures for emergencies.
j. Operating procedures for system, subsystem, or equipment failure.
k. Seasonal and weekend operating instructions.
l. Required sequences for electric or electronic systems.
m. Special operating instructions and procedures.

5. Adjustments: Include the following:

a. Alignments.
b. Checking adjustments.
c. Noise and vibration adjustments.
d. Economy and efficiency adjustments.

6. Troubleshooting: Include the following:

a. Diagnostic instructions.
b. Test and inspection procedures.

7. Maintenance: Include the following:

a. Inspection procedures.
b. Types of cleaning agents to be used and methods of cleaning.
c. List of cleaning agents and methods of cleaning detrimental to product.
d. Procedures for routine cleaning.
e. Procedures for preventive maintenance.
f. Procedures for routine maintenance.
g. Instruction on use of special tools.

8. Repairs: Include the following:

a. Diagnosis instructions.
b. Repair instructions.
c. Disassembly; component removal, repair, and replacement; and reassembly instructions.
d. Instructions for identifying parts and components.
e. Review of spare parts needed for operation and maintenance.

1.8 PREPARATION

A. Assemble educational materials necessary for instruction, including documentation and training module. Assemble training modules into a training manual organized in coordination with requirements in Section 017823 "Operation and Maintenance Data."

B. Set up instructional equipment at instruction location.

1.9 INSTRUCTION

A. Facilitator: Engage a qualified facilitator to prepare instruction program and training modules, to coordinate instructors, and to coordinate between Contractor and Owner for number of participants, instruction times, and location.

B. Engage qualified instructors to instruct Owner's personnel to adjust, operate, and maintain systems, subsystems, and equipment not part of a system.

1. Engineer will furnish an instructor to describe basis of system design, operational requirements, criteria, and regulatory requirements.
2. Owner will furnish an instructor to describe Owner's operational philosophy.
3. Owner will furnish Contractor with names and positions of participants.

C. Scheduling: Provide instruction at mutually agreed-on times. For equipment that requires seasonal operation, provide similar instruction at start of each season.

1. Schedule training with Owner, through Construction Manager, with at least seven days' advance notice.

D. Training Location and Reference Material: Conduct training on-site in the completed and fully operational facility using the actual equipment in-place. Conduct training using final operation and maintenance data submittals.

E. Evaluation: At conclusion of each training module, assess and document each participant's mastery of module by use of an oral and a demonstration performance-based test.

F. Cleanup: Collect used and leftover educational materials and give to Owner. Remove instructional equipment. Restore systems and equipment to condition existing before initial training use.

1.10 DEMONSTRATION AND TRAINING VIDEO RECORDINGS

A. General: Engage a qualified commercial videographer to record demonstration and training video recordings. Record each training module separately. Include classroom instructions and demonstrations, board diagrams, and other visual aids, but not student practice.

1. At beginning of each training module, record each chart containing learning objective and lesson outline.

B. Digital Video Recordings: Provide high-resolution, digital video in MPEG format, produced by a digital camera with minimum sensor resolution of 12 megapixels and capable of recording in full HD mode.

1. Submit video recordings on thumb drive and/or by uploading to web-based Project software site.
2. File Hierarchy: Organize folder structure and file locations according to Project Manual table of contents. Provide complete screen-based menu.
3. File Names: Utilize file names based on name of equipment generally described in video segment, as identified in Project specifications.

4. Contractor and Installer Contact File: Using appropriate software, create a file for inclusion on the equipment demonstration and training recording that describes the following for each Contractor involved on the Project, arranged according to Project Manual table of contents:

    a. Name of Contractor/Installer.
    b. Business address.
    c. Business phone number.
    d. Point of contact.
    e. Email address.

C. Recording: Mount camera on tripod before starting recording, unless otherwise necessary to adequately cover area of demonstration and training. Display continuous running time.

1. Film training session(s) in segments not to exceed 15 minutes.

    a. Produce segments to present a single significant piece of equipment per segment.
    b. Organize segments with multiple pieces of equipment to follow order of Project Manual table of contents.
    c. Where a training session on a particular piece of equipment exceeds 15 minutes, stop filming and pause training session. Begin training session again upon commencement of new filming segment.

D. Light Levels: Verify light levels are adequate to properly light equipment. Verify equipment markings are clearly visible prior to recording.

1. Furnish additional portable lighting as required.

E. Narration: Describe scenes on video recording to include description of items being viewed.

F. Transcript: Provide a transcript of the narration. Display images and running time captured from videotape opposite the corresponding narration segment.

G. Preproduced Video Recordings: Provide video recordings used as a component of training modules in same format as recordings of live training.

PART 2 - PRODUCTS (NOT USED)

PART 3 - EXECUTION (NOT USED)

END OF SECTION 017900

© 2023 CDM Smith
All Rights Reserved

SECTION 018819 - TIGHTNESS TESTING PERFORMANCE REQUIREMENTS

PART 1 - GENERAL

1.1 RELATED DOCUMENTS

A. Drawings and general provisions of the Contract, including General and Supplementary Conditions and Division 01 Specification Sections, apply to this Section.

1.2 SUMMARY

A. Section Includes:

1. Tightness testing of cast-in-place reinforced concrete liquid retaining structures Cedar Breaks and D B Wood Lift Station.

B. Related Requirements:

1. Section 031500 "Concrete Joints and Accessories" for joints in concrete structures.
2. Section 033000 " Cast-In-Place Concrete" for concrete related construction.
3. Section CIP12-TESTING OF PIPELLINES AND MANHOLES.
4. Section 400551 “Common Requirements for Process Valves” for valves and valve actuators.

1.3 INFORMATIONAL SUBMITTALS

A. Submit in accordance with Section 013300 “Submittal Procedures”:

1. Action Plan: Submit a detailed plan and schedule for each structure, which shows method of filling, testing and disposal of water.
2. Repair Procedures: Submit for acceptance the proposed repair methods, materials, and modifications needed, if structure does not meet tightness testing.

3. Test Reports: Submit a completed Tightness Test Report, Figure A, appended at the end of this Section of each test for each structure.

1.4 FIELD CONDITIONS

A. Coordinate timing and procedures for obtaining water for testing, structure testing, and water disposal with the Engineer and Owner a minimum of 30 days in advance of actual testing.

B. Water Source:

1. Provide water for testing independent from Owner’s water source.
2. Use water for testing from Owner’s water system. Obtain water at a time, flow rate, and location approved by Owner.

3. Provide labor, materials, equipment, incidentals, and power required to convey water to the structure.

C. Water Disposal:

1. Dispose of test water in an approved manner. Do not dispose by discharging onto the ground surface of public or private land.
2. Coordinate disposal of test water by reintroduction into the Plant process at a time, flow rate, and location with Owner.
3. Provide labor, materials, equipment, incidentals, and power required to convey water from the structure.

D. Environmental Conditions: Do not schedule test measurements for a period when the weather forecast indicates a substantial change in weather patterns that would affect testing. Do not schedule test measurements when weather forecast indicates water surface would be frozen before test is completed.

PART 2 - PRODUCTS (NOT USED)

PART 3 - EXECUTION

3.1 GENERAL

A. Perform tightness testing of cast-in-place reinforced concrete liquid retaining structures conforming to ACI 350.1 and as specified herein.

B. Perform tightness tests prior to waterproofing and dampproofing and prior to placing backfill around structures in order to permit observation and detection of leakage points.

C. Individually test each cell of multi-cell tanks (wetwell) and manhole.

D. Multi-cell tanks may be tested as a single unit where indicated.

3.2 PREPARATION

A. Remove soil, mud, debris and all other contaminants from structures prior to initiating tightness tests. Flush floor and sumps with water to provide a clean surface that is ready for testing.

B. Prior to testing, temporarily seal or bulkhead inlet and outlet pipes not required to be operational for testing procedures.

C. Confirm that valves and slide gates are completely closed. Repair and reset seals that do not completely close or leak. Test valves, and slide gates for leakage in accordance with requirements of respective Sections as part of the preparation for final tightness testing under this Section.

3.3 EXAMINATION

A. Examine structures to be tested for potential leakage paths including cracks, voids, honeycombs, and unsealed joints. Repair such paths to prevent leakage prior to testing.

B. Proceed with testing only after unsatisfactory conditions have been corrected.

3.4 TESTING PROCEDURES

A. Testing Conditions:

1. Do not begin filling of reinforced concrete structure until concrete elements of the structure have attained specified design strength, but not less than 14 days after placement of all concrete elements.
2. Fill reinforced concrete structure not exceeding a rate of 4 feet per 1 hour.
3. To minimize water absorption by concrete during testing, fill reinforced concrete structure to maximum operating water surface level and maintain water at that level for at least 3 days, prior to beginning tightness tests. Observe the exterior surfaces of the structure in both the early mornings and late afternoons during 3 days prior to tightness testing. Note any water observed on the structure exterior surfaces.
4. Test only a single structure at a time. Concurrent testing of contiguous or adjacent structures will not be allowed.

B. Testing Procedures:

1. Test Duration / Test Period: At least the time required to lower the water surface 3/8 inch (9.5 mm), assuming a loss of water at the maximum allowable rate, but not longer than 5 days.
2. Measure water surface elevations at 24-hour intervals. The vertical distance to the water surface shall be measured to within 1/16 inch from a fixed point on the structure above the water surface. Measure water surface elevations at the same four locations, 90 degrees apart. Record water temperature 18 inches below water surface when taking the first and last sets of measurements.

    a. Use methods to determine amount of precipitation or evaporation as approved by the Engineer.

3. Compute percentage of water volume loss based on measured change in water surface elevation, area of the horizontal water surface, initial water volume, and correction for precipitation or evaporation where applicable.
4. Restart test when test measurements become unreliable due to unusual precipitation or other external factors.

C. Reports: Prepare and submit as referenced in this Section.

3.5 ACCEPTANCE

A. Following conditions are considered as not meeting the criteria for acceptance, regardless of actual loss of water volume from the structure:

1. Groundwater seeping or flowing into the structure through floors, walls, or wall-floor joints.
2. Structures which exhibit seeping or flowing water from joints, cracks, voids, honeycombs, or from beneath the foundation.
3. Increased flow from underdrain system during tightness testing.
4. Damp spots on concrete surfaces.
5. Moisture can be deposited on a dry handheld against the exterior surface of the structure.

B. Tightness of concrete tanks and structures will be considered acceptable when the conditions of included in paragraph above are not present and when loss of water volume does not exceed 0.05 percent of the starting volume per day.

3.6 REPAIRS AND RETESTING

A. Structures failing the tightness test and not exhibiting visible leakage may be retested after an additional stabilization period of 7 days. Structures failing this second test shall be repaired prior to further testing.

B. Retest Repaired structures until the structure meets all requirements.

3.7 SCHEDULE

A. Test following structures for tightness:

1. Tank types include:
   a. All pump stations and lift stations.

END OF SECTION 018819

© 2023 CDM Smith
All Rights Reserved

FIGURE A

3.8 TIGHTNESS TEST REPORT

3.9 PROJECT _____SUBMITTED BY _____

3.10 STRUCTURE * _____TEST DATES _____

3.11 Allowable loss of water volume _____ percent in 24 hours

3.12 Measured loss of water volume _____ percent in 24 hours

3.13 TEST READINGS

3.14 Water Temperature at Start _____ [_____] degrees F

3.15 Water Temperature at End _____ [_____] degrees F

3.16 Operating Water Surface Level _____

			Water Surface Elevation				
Entry	Date**	Time	Location 1	Location 2	Location 3	Location 4	Initials**
0							
1							
2							
3							
4							
5							
Change in level (difference between entry 5 and entry 0)							
Average change in level (sum of change in level / 4)							
Correction for precipitation/evaporation							
Corrected change in level = CL =							
Measured percent water loss in 24 hrs. = $\frac{(CL) \times (\text{surface area}) \times (100)}{(\text{initial water volume})\ (\text{number of test days})}$							

3.17 Notes and Field Observations **
_____

3.18 _____
_____

3.19 _____
_____

3.20 _____
_____

3.21 _____
_____

3.22 * Attach a sketch showing a plan of structure and measurement locations.

3.23 ** Place date and initials at the beginning of each entry.

END OF TIGHTNESS TEST REPORT FORM

© 2023 CDM Smith
All Rights Reserved

SECTION 019113 - GENERAL COMMISSIONING REQUIREMENTS

PART 1 - GENERAL

1.1 RELATED DOCUMENTS

A. Drawings and general provisions of the Contract, including General and Supplementary Conditions and other Division 01 Specification Sections, apply to this Section.

B. Owner's Project Requirements and Basis-of-Design Document are included by reference for information only.

1.2 SUMMARY

A. Section Includes:

1. General requirements for coordinating and scheduling commissioning activities.
2. Commissioning meetings.
3. Commissioning reports.
4. Use of commissioning process test equipment, instrumentation, and tools.
5. Construction checklists, including, but not limited to, installation checks, startup, performance tests, and performance test demonstration.
6. Commissioning tests and commissioning test demonstration.
7. Adjusting, verifying, and documenting identified systems and assemblies.

B. Related Requirements:

1. Section CIP 3"Summary of Work" for Commissioning Authority responsibilities.
2. Section 013300 "Submittal Procedures" for submittal procedure requirements for commissioning process.
3. Section 017700 "Closeout Procedures" for Certificate of Construction-Phase Commissioning Process Completion submittal requirements.
4. Section 017823 "Operation and Maintenance Data" for preliminary operation and maintenance data submittal requirements.

1.3 DEFINITIONS

A. Acceptance Criteria: Threshold of acceptable work quality or performance specified for a commissioning activity, including, but not limited to, construction checklists, performance tests, performance test demonstrations, commissioning tests, and commissioning test demonstrations.

B. Basis-of-Design Document: A document prepared by Engineer that records concepts, calculations, decisions, and product selections used to comply with Owner's Project Requirements and to suit applicable regulatory requirements, standards, and guidelines.

C. Commissioning Authority: An entity engaged by Owner, and identified in Section 011000 "Summary," to evaluate Commissioning-Process Work.

D. Commissioning Plan: A document, prepared by Commissioning Authority, that outlines the organization, schedule, allocation of resources, and documentation of commissioning requirements.

E. Commissioning: A quality-focused process for verifying and documenting that the facility and all of its systems and assemblies are planned, designed, installed, and tested to comply with Owner's Project Requirements. The requirements specified here are limited to the construction phase commissioning activities. The scope of the commissioning process is defined in CIP3, “Summary of Work”.

F. Construction-Phase Commissioning-Process Completion: The stage of completion and acceptance of commissioning process when resolution of deficient conditions and issues discovered during commissioning process and retesting until acceptable results are obtained has been accomplished. Owner will establish in writing the date construction-phase commissioning-process completion is achieved. See Section 017700 "Closeout Procedures" for Certificate of Construction-Phase Commissioning Process Completion submittal requirements.

1. Commissioning process is complete when the Work specified of this Section and related Sections has been completed and accepted, including, but not limited to, the following:

a. Completion of tests and acceptance of test results.
b. Resolution of issues, as verified by retests performed and documented with acceptance of retest results.
c. Comply with requirements in Section 017900 "Demonstration and Training."
d. Completion and acceptance of submittals and reports.

G. Owner's Project Requirements: A document that details the functional requirements of a project and the expectations of how it will be used and operated, including Project goals, measurable performance criteria, cost considerations, benchmarks, success criteria, and supporting information. This document is prepared either by the Owner or for the Owner by the Engineer or Commissioning Authority.

H. Owner's Witness: Commissioning Authority, Owner's Project Manager, or Engineer-designated witness authorized to authenticate test demonstration data and to sign completed test data forms.

I. "Systems," "Assemblies," "Subsystems," "Equipment," and "Components": Where these terms are used together or separately, they shall mean "as-built" systems, assemblies, subsystems, equipment, and components.

J. Test: Performance tests, performance test demonstrations, commissioning tests, and commissioning test demonstrations.

1.4 COMMISSIONING TEAM

A. Members Appointed by Contractor(s):

1. Commissioning Coordinator: A person or entity employed by Contractor to manage, schedule, and coordinate commissioning process.
2. Project superintendent and other employees that Contractor may deem appropriate for a particular portion of the commissioning process.

3. Subcontractors, installers, suppliers, and specialists that Contractor may deem appropriate for a particular portion of the commissioning process.
4. Appointed team members shall have the authority to act on behalf of the entity they represent.

B. Members Appointed by Owner:
1. Owner representative(s), facility operations and maintenance personnel, plus other employees, separate contractors, and consultants that Owner may deem appropriate for a particular portion of the commissioning process.
2. Engineer, plus employees and consultants that Engineer may deem appropriate for a particular portion of the commissioning process.

1.5 INFORMATIONAL SUBMITTALS

A. Comply with requirements in Section 013300 "Submittal Procedures" for submittal procedure general requirements for commissioning process.

B. Commissioning Plan Information:

1. List of Contractor-appointed commissioning team members to include specific personnel and subcontractors performing the various commissioning requirements.
2. Schedule of commissioning activities, integrated with the Construction Schedule.
3. Contractor personnel and subcontractors participating in each test.
4. List of instrumentation required for each test to include identification of parties that will provide instrumentation for each test.

C. Commissioning schedule.

D. Two-week look-ahead schedules.

E. List test instrumentation, equipment, and monitoring devices. Include the following information:

1. Make, model, serial number, and application for each instrument, equipment, and monitoring device.
2. Brief description of intended use.
3. Calibration record showing the following:

a. Calibration agency, including name and contact information.
b. Last date of calibration.
c. Range of values for which calibration is valid.
d. Certification of accuracy.
e. Certification for calibration equipment traceable to NIST.
f. Due date of the next calibration.

F. Test Reports:

1. Pre-Startup Report: Prior to startup of equipment or a system, submit signed, completed construction checklists.

2. Test Data Reports: At the end of each day in which tests are conducted, submit test data for tests performed.
3. Commissioning Issue Reports: Daily, at the end of each day in which tests are conducted, submit commissioning issue reports for tests for which acceptable results were not achieved.
4. Weekly Progress Report: Weekly, at the end of each week in which tests are conducted, submit a progress report.
5. Data Trend Logs: Submit data trend logs at the end of the trend log period.
6. System Alarm Logs: Daily, at the start of days following a day in which tests were performed, submit printout of log of alarms that occurred since the last log was printed.

G. Construction Checklists:

1. Material checks.
2. Installation checks.
3. Startup procedures, where required.

1.6 CLOSEOUT SUBMITTALS

A. Commissioning Report:

1. At Construction-Phase Commissioning Completion, include the following:

a. Pre-startup reports.
b. Approved test procedures.
c. Test data forms, completed and signed.
d. Progress reports.
e. Commissioning issue report log.
f. Commissioning issue reports showing resolution of issues.
g. Correspondence or other documents related to resolution of issues.
h. Other reports required by commissioning process.
i. List unresolved issues and reasons they remain unresolved and should be exempted from the requirements for Construction-Phase Commissioning Completion.
j. Report shall include commissioning work of Contractor.

B. Request for Certificate of Construction-Phase Commissioning Process Completion.

C. Operation and Maintenance Data: For proprietary test equipment, instrumentation, and tools to include in operation and maintenance manuals.

1.7 QUALITY ASSURANCE

A. Commissioning Coordinator Qualifications:

1. Documented experience commissioning systems of similar complexity to those contained in these documents on at least three projects of similar scope and complexity.

B. Calibration Agency Qualifications: Certified by The American Association for Laboratory Accreditation that the calibration agency complies with minimum requirements of ISO/IEC 17025.

PART 2 - PRODUCTS

2.1 TEST EQUIPMENT, INSTRUMENTATION, AND TOOLS

A. Test equipment and instrumentation required to perform the commissioning process shall remain the property of Contractor unless otherwise indicated.

B. Test equipment and instrumentation required to perform commissioning process shall comply with the following criteria:

1. Be manufactured for the purpose of testing and measuring tests for which they are being used and have an accuracy to test and measure system performance within the tolerances required to determine acceptable performance.
2. Calibrated and certified.

    a. Calibration performed and documented by a qualified calibration agency according to national standards applicable to the tools and instrumentation being calibrated. Calibration shall be current according to national standards or within test equipment and instrumentation manufacturer's recommended intervals, whichever is more frequent, but not less than within six months of initial use on Project. Calibration tags shall be permanently affixed.
    b. Repair and recalibrate test equipment and instrumentation if dismantled, dropped, or damaged since last calibrated.

3. Maintain test equipment and instrumentation.
4. Use test equipment and instrumentation only for testing or monitoring Work for which they are designed.

2.2 PROPRIETARY TEST EQUIPMENT, INSTRUMENTATION, AND TOOLS

A. Proprietary test equipment, instrumentation, and tools are those manufactured or prescribed by tested equipment manufacturer and required for work on its equipment as a condition of equipment warranty, or as otherwise required to service, repair, adjust, calibrate, or perform work on its equipment.

1. Identify proprietary test equipment, instrumentation, and tools required in the test equipment identification list submittal.
2. Proprietary test equipment, instrumentation, and tools shall become the property of Owner at Substantial Completion.

2.3 REPORT FORMAT AND ORGANIZATION

A. General Format and Organization:

1. Bind report in three-ring binders.
2. Label the front cover and spine of each binder with the report title, volume number, project name, Contractor's name, and date of report.
3. Record report on compact disk.
4. Electronic Data: Portable document format (PDF); a single file with outline-organized bookmarks for major and minor tabs and tab contents itemized for specific reports.

B. Commissioning Report:

1. Include a table of contents and an index to each test.
2. Include major tabs for each Specification Section.
3. Include minor tabs for each test.
4. Within each minor tab, include the following:

a. Test specification.
b. Pre-startup reports.
c. Approved test procedures.
d. Test data forms, completed and signed.
e. Commissioning issue reports, showing resolution of issues, and documentation related to resolution of issues pertaining to a single test. Group data forms, commissioning issue reports showing resolution of issues, and documentation related to resolution of issues for each test repetition together within the minor tab, in reverse chronological order (most recent on top).

PART 3 - EXECUTION

3.1 PREPARATION

A. Review preliminary construction checklists and preliminary test procedures and data forms.

3.2 CONSTRUCTION CHECKLISTS

A. Construction checklists cannot modify or conflict with the Contract Documents.

B. Create construction checklists based on actual systems and equipment to be included in Project.

C. Material Checks: Compare specified characteristics and approved submittals with materials as received. Include factory tests and other evaluations, adjustments, and tests performed prior to shipment if applicable.

1. Service connection requirements, including configuration, size, location, and other pertinent characteristics.
2. Included optional features.
3. Delivery Receipt Check: Inspect and record physical condition of materials and equipment on delivery to Project site, including agreement with approved submittals, cleanliness, and lack of damage.
4. Installation Checks:

a. Location according to Drawings and approved Shop Drawings.
b. Configuration.
c. Compliance with manufacturers' written installation instructions.
d. Attachment to structure.
e. Access clearance to allow for maintenance, service, repair, removal, and replacement without the need to disassemble or remove other equipment or building elements. Access coordinated with other building elements and equipment, including, but not limited to, ceiling and wall access panels, in a manner consistent with OSHA fall-protection regulations and safe work practices.
f. Utility connections are of the correct characteristics, as applicable.
g. Correct labeling and identification.
h. Startup Checks: Verify readiness of equipment to be energized. Include manufacturer's standard startup procedures and forms.

D. Startup: Perform and document initial operation of equipment to prove that it is installed properly and operates as intended according to manufacturer's standard startup procedures, at minimum.

E. Performance Tests:

1. Static Tests: As specified elsewhere, including, but not limited to, duct and pipe leakage tests, insulation-resistance tests, and water-penetration tests.
2. Component Performance Tests: Tests evaluate the performance of an input or output of components under a full range of operating conditions.
3. Equipment and Assembly Performance Tests: Test and evaluate performance of equipment and assemblies under a full range of operating conditions and loads.
4. System Performance Tests: Test and evaluate performance of systems under a full range of operating conditions and loads.
5. Intersystem Performance Tests: Test and evaluate the interface of different systems under a full range of operating conditions and loads.

F. Deferred Construction Checklists: Obtain Owner approval of proposed deferral of construction checklists, including proposed schedule of completion of each deferred construction checklist, before submitting request for Certificate of Construction-Phase Commissioning Process Completion. When approved, deferred construction checklists may be completed after date of Construction-Phase Commissioning Completion. Include the following in a request for Certificate of Construction-Phase Commissioning Process Completion:

1. Identify deferred construction checklists by number and title.
2. Provide a target schedule for completion of deferred construction checklists.
3. Written approval of proposed deferred construction checklists, including approved schedule of completion of each deferred construction checklist.

G. Delayed Construction Checklists: Obtain Owner approval of proposed delayed construction checklists, including proposed schedule of completion of each delayed construction checklist, before submitting request for Certificate of Construction-Phase Commissioning Process Completion. When approved, delayed construction checklists may be completed after date of Construction-Phase Commissioning Completion. Include the following in a request for Certificate of Construction-Phase Commissioning Process Completion:

1. Identify delayed construction checklist by construction checklist number and title.

2. Provide a target schedule for completion of delayed construction checklists.
3. Written approval of proposed delayed construction checklists, including approved schedule of completion of each delayed construction checklist.

3.3 GENERAL EXECUTION REQUIREMENTS

A. Schedule and coordinate commissioning process with the Construction Schedule.

B. Perform activities identified in construction checklists, including tests, and document results of actions as construction proceeds.

C. Perform test demonstrations for Owner's witness. Unless otherwise indicated, demonstrate tests for 100 percent of work to which the test applies. In some instances, demonstration of a random sample of other than 100 percent of the results of a test is specified.

D. Report test data and commissioning issue resolutions.

E. Schedule personnel to participate in and perform Commissioning-Process Work.

F. Installing contractors' commissioning responsibilities include, but are not limited to, the following:

1. Operating the equipment and systems they install during tests.
2. In addition, installing contractors may be required to assist in tests of equipment and systems with which their work interfaces.

3.4 COMMISSIONING COORDINATOR RESPONSIBILITIES

A. Management and Coordination: Manage, schedule, and coordinate commissioning process, including, but not limited to, the following:

1. Coordinate with subcontractors on their commissioning responsibilities and activities.
2. Obtain, assemble, and submit commissioning documentation.
3. Conduct periodic on-site commissioning meetings.
4. Develop and maintain the commissioning schedule. Integrate commissioning schedule into the Construction Schedule. Update Construction Schedule at specified intervals.
5. Review and comment on preliminary test procedures and data forms.
6. Report inconsistencies and issues in system operations.
7. Verify that tests have been completed and results comply with acceptance criteria, and that equipment and systems are ready before scheduling test demonstrations.
8. Direct and coordinate test demonstrations.
9. Coordinate witnessing of test demonstrations by Owner's witness.
10. Coordinate and manage training. Be present during training sessions to direct video recording, present training, and direct the training presentations of others.
11. Prepare and submit specified commissioning reports.
12. Track commissioning issues until resolution and retesting is successfully completed.
13. Retain original records of Commissioning-Process Work, organized as required for the commissioning report. Provide Owner's representative access to these records on request.
14. Assemble and submit commissioning report.

3.5 COMMISSIONING TESTING

A. Quality Control: Construction checklists, including tests, are quality-control tools designed to improve the functional quality of Project. Test demonstrations evaluate the effectiveness of Contractor's quality-control process.

B. Owner's witness will be present to witness commissioning work requiring the signature of an owner's witness, including, but not limited to, test demonstrations. Owner's project manager will coordinate attendance by Owner's witness with Contractor's published Commissioning Schedule. Owner's witness will provide no labor or materials in the commissioning work. The only function of Owner's witness will be to observe and comment on the progress and results of commissioning process.

C. Construction Checklists:

1. Complete construction checklists as Work is completed.
2. Distribute construction checklists to installing contractors before they start work.
3. Installers:

    a. Verify installation using approved construction checklists as Work proceeds.
    b. Complete and sign construction checklists for work performed during the preceding.

4. Provide Commissioning Authority access to construction checklists.

D. Installation Compliance Issues: Record as an installation compliance issue Work found to be incomplete, inaccessible, at variance with the Contract Documents, nonfunctional, or that does not comply with construction checklists. Record installation compliance issues on the construction checklist at the time they are identified. Record corrective action and how future Work should be modified before signing off the construction checklist.

E. Pre-Startup Audit: Prior to executing startup procedures, review completed installation checks to determine readiness for startup and operation. Report conditions, which, if left uncorrected, adversely impact the ability of systems or equipment to operate satisfactorily or to comply with acceptance criteria. Prepare pre-startup report for each system.

F. Test Procedures and Test Data Forms:

1. Test procedures shall define the step-by-step procedures to be used to execute tests and test demonstrations.
2. Test procedures shall be specific to the make, model, and application of the equipment and systems being tested.
3. Completed test data forms are the official records of the test results.
4. Commissioning Authority will provide to Contractor preliminary test procedures and test data forms for performance tests and commissioning tests after approval of Product Data, Shop Drawings, and preliminary operation and maintenance manual.
5. Review preliminary test procedures and test data forms, and provide comments within 14 days of receipt from Commissioning Authority. Review shall address the following:

a. Equipment protection and warranty issues, including, but not limited to, manufacturers' installation and startup recommendations, and operation and maintenance instructions.
b. Applicability of the procedure to the specific software, equipment, and systems approved for installation.

6. After Contractor has reviewed and commented on the preliminary test procedures and test data forms, Commissioning Authority will revise and reissue the approved revised test procedures and test data forms marked "Approved for Testing."
7. Use only approved test procedures and test data forms marked "Approved for Testing" to perform and document tests and test demonstrations.

G. Performance of Tests:

1. The sampling rate for tests is 100 percent. The sampling rate for test demonstrations is 100 percent unless otherwise indicated.
2. Perform and complete each step of the approved test procedures in the order listed.
3. Record data observed during performance of tests on approved data forms at the time of test performance and when the results are observed.
4. Record test results that are not within the range of acceptable results on commissioning issue report forms in addition to recording the results on approved test procedures and data forms according to the "Commissioning Compliance Issues" Paragraph in this Article.
5. On completion of a test, sign the completed test procedure and data form. Tests for which test procedures and data forms are incomplete, not signed, or which indicate performance that does not comply with acceptance criteria will be rejected. Tests for which test procedures and data forms are rejected shall be repeated and results resubmitted.

H. Performance of Test Demonstration:

1. Perform test demonstrations on a sample of tests after test data submittals are approved. The sampling rate for test demonstrations shall be 100 percent unless otherwise indicated in the individual test specification.
2. Notify Owner's witness at least three days in advance of each test demonstration.
3. Perform and complete each step of the approved test procedures in the order listed.
4. Record data observed during performance of test demonstrations on approved data forms at the time of demonstration and when the results are observed.
5. Provide full access to Owner's witness to directly observe the performance of all aspects of system response during the test demonstration. On completion of a test demonstration, sign the completed data form and obtain signature of Owner's witness at the time of the test to authenticate the reported results.
6. Test demonstration data forms not signed by Contractor and Owner's witness at the time of the completion of the procedure will be rejected. Test demonstrations for which data forms are rejected shall be repeated and results shall be resubmitted.

a. Exception for Failure of Owner's Witness to Attend: Failure of Owner's witness to be present for agreed-on schedule of test demonstration shall not delay Contractor. If Owner's witness fails to attend a scheduled test, Contractor shall proceed with the scheduled test. On completion, Contractor shall sign the data form for Contractor and for Owner's witness, and shall note the absence of Owner's witness at the scheduled time and place.

7. False load test requirements are specified in related sections.

    a. Where false load testing is specified, provide temporary equipment, power, controls, wiring, piping, valves, and other necessary equipment and connections required to apply the specified load to the system. False load system shall be capable of steady-state operation and modulation at the level of load specified. Equipment and systems permanently installed in this work shall not be used to create the false load without Engineer's written approval.

I. Deferred Tests:

1. Deferred Test List: Identify, in the request for Certificate of Construction-Phase Commissioning Process Completion, proposed deferred tests or other tests approved for deferral until specified seasonal or other conditions are available. When approved, deferred tests may be completed after the date of Construction-Phase Commissioning Completion. Identify proposed deferred tests in the request for Certificate of Construction-Phase Commissioning Process Completion as follows:

    a. Identify deferred tests by number and title.
    b. Provide a target schedule for completion of deferred tests.

2. Schedule and coordinate deferred tests. Schedule deferred tests when specified conditions are available. Notify Engineer and Commissioning Authority at least three working days (minimum) in advance of tests.
3. Where deferred tests are specified, coordinate participation of necessary personnel and of Engineer, Commissioning Authority, and Owner's witness. Schedule deferred tests to minimize occupant and facility impact. Obtain Engineer's approval of the proposed schedule.

J. Delayed Tests:

1. Delayed Test List: Identify, in the request for Certificate of Construction-Phase Commissioning Process Completion, proposed delayed tests. Obtain Owner approval of proposed delayed tests, including proposed schedule of completion of each delayed test, before submitting request for Certificate of Construction-Phase Commissioning Process Completion. Include the following in the request for Certificate of Construction-Phase Commissioning Process Completion:

    a. Identify delayed tests by test number and title.
    b. Written approval of proposed delayed tests, including approved schedule of completion of delayed tests.

2. Schedule and coordinate delayed tests. Schedule delayed tests when conditions that caused the delay have been rectified. Notify Engineer and Commissioning Authority at least three working days (minimum) in advance of tests.
3. Where delayed tests are approved, coordinate participation of necessary personnel and of Engineer, Commissioning Authority, and Owner's witness. Schedule delayed tests to minimize occupant and facility impact. Obtain Engineer's approval of the proposed schedule.

K. Commissioning Compliance Issues:

1. Test results that are not within the range of acceptable results are commissioning compliance issues.
2. Track and report commissioning compliance issues until resolution and retesting are successfully completed.
3. If a test demonstration fails, determine the cause of failure. Direct timely resolution of issue and then repeat the demonstration. If a test demonstration must be repeated due to failure caused by Contractor work or materials, reimburse Owner for billed costs for the participation in the repeated demonstration.
4. Test Results: If a test demonstration fails to meet the acceptance criteria, perform the following:

    a. Complete a commissioning compliance issue report form promptly on discovery of test results that do not comply with acceptance criteria.
    b. Submit commissioning compliance issue report form within 24 hours of the test.
    c. Determine the cause of the failure.
    d. Establish responsibility for corrective action if the failure is due to conditions found to be Contractor's responsibility.

5. Commissioning Compliance Issue Report: Provide a commissioning compliance issue report for each issue. Do not report multiple issues on the same commissioning compliance issue report.

    a. Exception: If an entire class of devices is determined to exhibit the identical issue, they may be reported on a single commissioning compliance issue report. (For example, if all return-air damper actuators that are specified to fail to the open position are found to fail to the closed position, they may be reported on a single commissioning issue report. If a single commissioning issue report is used for multiple commissioning compliance issues, each device shall be identified in the report, and the total number of devices at issue shall be identified.
    b. Complete and submit Part 1 of the commissioning compliance issue report immediately when the condition is observed.
    c. Record the commissioning compliance issue report number and describe the deficient condition on the data form.
    d. Resolve commissioning compliance issues promptly. Complete and submit Part 2 of the commissioning compliance issue report when issues are resolved.

6. Diagnose and correct failed test demonstrations as follows:

    a. Perform diagnostic tests and activities required to determine the fundamental cause of issues observed.
    b. Record each step of the diagnostic procedure prior to performing the procedure. Update written procedure as changes become necessary.
    c. Record the results of each step of the diagnostic procedure.
    d. Record the conclusion of the diagnostic procedure on the fundamental cause of the issue.
    e. Determine and record corrective measures.
    f. Include diagnosis of fundamental cause of issues in commissioning compliance issue report.

7. Retest:

a. Schedule and repeat the complete test procedure for each test demonstration for which acceptable results are not achieved. Obtain signature of Owner's witness on retest data forms. Repeat test demonstration until acceptable results are achieved. Except for issues that are determined to result from design errors or omissions, or other conditions beyond Contractor's responsibility, compensate Owner for direct costs incurred as the result of repeated test demonstrations to achieve acceptable results.
b. For each repeated test demonstration, submit a new test data form, marked "Retest."

8. Do not correct commissioning compliance issues during test demonstrations.

a. Exceptions will be allowed if the cause of the issue is obvious and resolution can be completed in less than five minutes. If corrections are made under this exception, note the deficient conditions on the test data form and issue a commissioning compliance issue report. A new test data form, marked "Retest," shall be initiated after the resolution has been completed.

3.6 SEQUENCING

A. Sequencing of Commissioning Verification Activities: For a particular material, item of equipment, assembly, or system, perform the following in the order listed unless otherwise indicated:

1. Construction Checklists:

a. Material checks.
b. Installation checks.
c. Startup, as appropriate. Some startup may depend on component performance. Such startup may follow component performance tests on which the startup depends.
d. Performance Tests:

1) Static tests, as appropriate.
2) Component performance tests. Some component performance tests may depend on completion of startup. Such component performance tests may follow startup.
3) Equipment and assembly performance tests.
4) System performance tests.
5) Intersystem performance tests.

2. Commissioning tests.

B. Before performing commissioning tests, verify that materials, equipment, assemblies, and systems are delivered, installed, started, and adjusted to perform according to construction checklists.

C. Verify readiness of materials, equipment, assemblies, and systems by performing tests prior to performing test demonstrations. Notify Engineer if acceptable results cannot be achieved due to conditions beyond Contractor's control or responsibility.

D. Commence tests as soon as installation checks for materials, equipment, assemblies, or systems are satisfactorily completed. Tests of a particular system may proceed prior to completion of other systems, provided the incomplete work does not interfere with successful execution of test.

3.7 SCHEDULING

A. Commence commissioning process as early in the construction period as possible.

B. Commissioning Schedule: Integrate commissioning activities into Construction Schedule.

1. Include detailed commissioning activities in monthly updated Construction Schedule and short-interval schedule submittals.
2. Schedule the start date and duration for the following commissioning activities:

    a. Submittals.
    b. Preliminary operation and maintenance manual submittals.
    c. Installation checks.
    d. Startup, where required.
    e. Performance tests.
    f. Performance test demonstrations.
    g. Commissioning tests.
    h. Commissioning test demonstrations.

3. Schedule shall include a line item for each installation check, startup, and test activity specific to the equipment or systems involved.
4. Determine milestones and prerequisites for commissioning process. Show commissioning milestones, prerequisites, and dependencies in monthly updated critical-path-method construction schedule and short-interval schedule submittals.

C. Two-Week Look-Ahead Commissioning Schedule:

1. Two weeks prior to the beginning of tests, submit a detailed two-week look-ahead schedule. Thereafter, submit updated two-week look-ahead schedules weekly for the duration of commissioning process.
2. Two-week look-ahead schedules shall identify the date, time, beginning location, Contractor personnel required, and anticipated duration for each startup or test activity.
3. Use two-week look-ahead schedules to notify and coordinate participation of Owner's witnesses.

D. Owner's Witness Coordination:

1. Coordinate Owner's witness participation via Engineer.
2. Notify Engineer of commissioning schedule changes at least two workdays in advance for activities requiring the participation of Owner's witness.

3.8 COMMISSIONING REPORTS

A. Test Reports:

1. Pre-startup reports include observations of the conditions of installation, organized into the following sections:

    a. Equipment Model Verification: Compare contract requirements, approved submittals, and provided equipment. Note inconsistencies.
    b. Preinstallation Physical Condition Checks: Observe physical condition of equipment prior to installation. Note conditions including, but not limited to, physical damage, corrosion, water damage, or other contamination or dirt.
    c. Preinstallation Component Verification Checks: Verify components supplied with the equipment, preinstalled or field installed, are correctly installed and functional. Verify external components required for proper operation of equipment correctly installed and functional. Note missing, improperly configured, improperly installed, or nonfunctional components.
    d. Summary of Installation Compliance Issues and Corrective Actions: Identify installation compliance issues and the corrective actions for each. Verify that issues noted have been corrected.
    e. Evaluation of System Readiness for Startup: For each item of equipment for each system for which startup is anticipated, document in summary form acceptable to Owner completion of equipment model verification, preinstallation physical condition checks, preinstallation component verification checks, and completion of corrective actions for installation compliance issues.

2. Test data reports include the following:

    a. "As-tested" system configuration. Complete record of conditions under which the test was performed, including, but not limited to, the status of equipment, systems, and assemblies; temporary adjustments and settings; and ambient conditions.
    b. Data and observations, including, but not limited to, data trend logs, recorded during the tests.
    c. Signatures of individuals performing and witnessing tests.
    d. Data trend logs accumulated overnight from the previous day of testing.

3. Commissioning Compliance Issue Reports: Report as commissioning compliance issues results of tests and test demonstrations that do not comply with acceptance criteria. Report only one issue per commissioning compliance issue report. Use sequentially numbered facsimiles of commissioning compliance issue report form included in this Section, or other form approved by Owner. Distribute commissioning compliance issue reports to parties responsible for taking corrective action. Identify the following:

    a. Commissioning compliance issue report number. Assign unique, sequential numbers to individual commissioning compliance issue reports when they are created, to be used for tracking.
    b. Action distribution list.
    c. Report date.
    d. Test number and description.
    e. Equipment identification and location.
    f. Briefly describe observations about the performance associated with failure to achieve acceptable results. Identify the cause of failure if apparent.
    g. Diagnostic procedure or plan to determine the cause (include in initial submittal)
    h. Diagnosis of fundamental cause of issues as specified below (include in resubmittal).

i. Fundamental cause of unacceptable performance as determined by diagnostic tests and activities.
j. When issues have been resolved, update and resubmit the commissioning issue report forms by completing Part 2. Identify resolution taken and the dates and initials of the persons making the entries.
k. Schedule for retesting.

4. Weekly progress reports include information for tests conducted since the preceding report and the following:

   a. Completed data forms.
   b. Equipment or system tested, including test number, system or equipment tag number and location, and notation about the apparent acceptability of results.
   c. Activities scheduled but not conducted per schedule.
   d. Commissioning compliance issue report log.
   e. Schedule changes for remaining Commissioning-Process Work, if any.

5. Data trend logs shall be initiated and running prior to the time scheduled for the test demonstration.

   a. Trend log data format shall be multiple data series graphs. Where multiple data series are trend logged concurrently, present the data on a common horizontal time axis. Individual data series may be presented on a segmented vertical axis to avoid interference of one data series with another, and to accommodate different axis scale values. Graphs shall be sufficiently clear to interpret data within the accuracy required by the acceptance criteria.
   b. Attach to the data form printed trend log data collected during the test or test demonstration.
   c. Record, print out, and attach to the data form operator activity during the time the trend log is running. During the time the trend log is running, operator intervention not directed by the test procedure invalidates the test results.

6. System Alarm Logs: Record and print out a log of alarms that occurred since the last log was printed. Evaluate alarms to determine if the previous day's work resulted in any conditions that are not considered "normal operation."

   a. Conditions that are not considered "normal operation" shall be reported on a commissioning issue report attached to the alarm log. Resolve as necessary. The intent of this requirement is to discover control system points or sequences left in manual or disabled conditions, equipment left disconnected, set points left with abnormal values, or similar conditions that may have resulted from failure to fully restore systems to normal, automatic control after test completion.

3.9 CERTIFICATE OF CONSTRUCTION-PHASE COMMISSIONING PROCESS COMPLETION

A. When Contractor considers that construction-phase commissioning process, or a portion thereof which Owner agrees to accept separately, is complete, Contractor shall prepare and submit to Owner and Commissioning Authority through Engineer a comprehensive list of items to be

completed or corrected. Failure to include an item on such list does not alter Contractor's responsibility to compete commissioning process.

B. On receipt of Contractor's list, Commissioning Authority will make an inspection to determine whether the construction-phase commissioning process or designated portion thereof is complete. If Commissioning Authority's inspection discloses items, whether included on Contractor's list, which is not sufficiently complete as defined in "Construction-Phase Commissioning Process Completion" Paragraph in the "Definitions" Article, Contractor shall, before issuance of the Certificate of Construction-Phase Commissioning Process Completion, complete or correct such items on notification by Commissioning Authority. In such case, Contractor shall then submit a request for another inspection by Commissioning Authority to determine construction-phase commissioning process completion.

C. Contractor shall promptly correct deficient conditions and issues discovered during commissioning process. Costs of correcting such deficient conditions and issues, including additional testing and inspections, the cost of uncovering and replacement, and compensation for Engineer's and Commissioning Authority's services and expenses made necessary thereby, shall be at Contractor's expense.

D. When construction-phase commissioning process or designated portion is complete, Commissioning Authority will prepare a Certificate of Construction-Phase Commissioning Process Completion that shall establish the date of completion of construction-phase commissioning process. Certificate of Construction-Phase Commissioning Process Completion shall be submitted prior to requesting inspection for determining date of Substantial Completion.

END OF SECTION 019113

© 2023 CDM Smith
All Rights Reserved

This page intentionally left blank.

© 2023 CDM Smith
All Rights Reserved

SECTION 025731 - KARST VOID MITIGATION

PART 1 - GENERAL

1.1 RELATED DOCUMENTS

A. Drawings and general provisions of the Contract, including General and Supplementary Conditions and Division 01 Specification Sections, apply to this Section.

1.2 SUMMARY

A. Section includes:

1. Notification requirements.
2. Mitigation measures for significant voids and water flow features discovered in bedrock during excavation activities.

B. Related Requirements:

1. Pipe excavation, trenching, embedment, encasement, and backfilling are included in Section G4.
2. Granular fill materials are included in Section G5.
3. Sedimentation and erosion control are included in Section G6.
4. Submittals are in included in Section CIP10.
5. Trench Safety Requirements are included in Section CIP11.
6. Concrete for structures is included in Division 3.
7. Section 312323.33 “Flowable backfill”.

1.3 DEFINITIONS

A. Void Type Grade 1: Opening in rock measuring more than 1 cubic foot (e.g., 1 foot by 1 foot by 1 foot), but less than 18 cubic feet (e.g., 2 feet by 3 feet by 3 feet).

B. Void Type Grade 2: Opening in rock measuring 18 cubic feet or more but less than 160 cubic feet (e.g., 4 feet by 4 feet by 10 feet or 2 feet by 2 feet by 20 feet).

C. Void Type Grade 3: Opening in rock measuring 160 cubic feet or more. A specifically designed mitigation measure will typically be required for this size void.

D. Local Regulatory Authority: The Texas Commission on Environmental Quality.

E. Geologist: A licensed Professional Geologist, registered in the State of Texas, hired by either the Engineer or Contractor.

F. Qualified Geophysical Testing Firm: A firm with a Professional Geologist licensed in the State of Texas with a minimum of 5 years of experience performing geophysical testing, including ground penetrating radar (GPR) and other applicable test methods to identify potential

subsurface voids. This firm will be hired by the Contractor and is to provide independent site evaluation.

1.4 UNIT PRICES

A. Void Mitigation:

1. Description: Includes replacement with approved materials, including all labor, materials, equipment, and all appurtenances.
2. Unit of Measurement: By cubic yard.

B. Excavation:

1. Description: Includes authorized additional excavation.
2. Unit of Measurement: By cubic yard.

C. Hard Rock:

1. Description: Includes hard rock.
2. Unit of Measurement: By cubic yard.

D. Concrete:

1. Description: Includes concrete for plugging.
2. Unit of Measurement: By cubic yard.

E. Grout:

1. Description: Includes grout for plugging.
2. Unit of Measurement: By cubic yard.

F. Geotextile Fabric:

1. Description: Includes geotextile fabric.
2. Unit of Measurement: By square yard.

G. Permanent Turf Reinforcement Mat (PTRM):

1. Description: Includes permanent turf reinforcement mat.
2. Unit of Measurement: By square yard.

H. Rock-Filled Polypropylene Bags:

1. Description: Includes bags and sand/rock fill.
2. Unit of Measurement: By cubic yard.

1.5 INSTALLATION CONFERENCE

A. In-field Conference: Conduct in-field conference at void location with Owner’s Representative, Engineer and Engineer’s Geologist, prior to proceeding with mitigation.

1.6 ACTION SUBMITTALS

A. Material Data and Certification: For each type of material to be used. Submit prior to start of construction to avoid delay in the event a void is encountered.

1. Flowable backfill.
2. Concrete.
3. Hard Rock.
4. Filter fabric.
5. Permanent turf reinforcement mat.
6. Polypropylene bags filled with pea gravel.
7. Other materials as specified herein and shown on the Drawings.

B. Shop Drawings: Provided by the qualified licensed consulting Geologist registered in the State of Texas.

1. Include plans, sections, and requirements for furnishing and installing mitigation measures significant voids and water flow features discovered in bedrock during excavation activities of a project.
2. Provide field sketches and photographs documenting any void mitigation measures installed during construction.
3. Pipe wall crushing and deflection calculations, as appropriate for flowable fill backfill associated with Class III Void Mitigation Measures.

1.7 CLOSEOUT SUBMITTALS

A. Project Closeout: For project closeout submittal, refer to Section CIP 14 Project Closeout.

1.8 QUALITY ASSURANCE

A. Testing Agency Qualifications: Qualified according to ASTM C1021 for testing indicated.

B. Testing Agency Qualifications: Member company of ANSI/NETA or Nationally Recognized Testing Laboratory (NRTL).

1.9 SITE CONDITIONS

A. Visit site of work and examine premises to verify existing conditions relative to work.

B. Notify Engineer and Owner in writing within 24 hours of a discovered void that meets any of the following criteria:

1. Is at least one square foot in total area.
2. Blows air from within substrate.
3. Consistently receives water during any rain event.
4. Potentially transmits groundwater.

C. Discontinue construction within 50 feet of void extents until mitigation measures are reviewed and approved by Owner and Engineer.

1. Construction may only proceed after mitigation measures are reviewed and approved by the Engineer, Owner and Local Regulatory Authority, if applicable.

PART 2 - PRODUCTS

2.1 MATERIALS

A. Hard Rock:

1. Hardness: Greater than 7 on the Mohs hardness scale.
2. Size: 3 inches in smallest dimension and 5 inches in largest dimension.
3. Open-graded with details and fines removed.
4. Durable, sound material not susceptible to degradation due to presence of water.

B. Controlled Low Strength Material (Flowable Fill):

1. Meet requirements for flowable fill included in Section C9.

C. Low Slump Concrete:

1. Meet requirements for curb and gutter, hand-vibrated concrete as specified in Section C1.
   a. Maximum 3-inch slump.
   b. 3,500 psi concrete mixtures allowed or required by the Local Regulatory Authority that meet the same specification will be accepted as an alternate on a case-by-case basis.

D. Pea Gravel:

1. Meet requirements of pea gravel backfill included in Section G5.

E. Pipe:

1. All pipe used for Air and Moisture continuity shall comply with ASTM D1785 schedule 40 PVC.

2.2 GEOTEXTILES

A. Filter Fabric:

1. Meet requirements for silt fence fabric filter fabric included in Section G6.

B. Polypropylene Bags for Pea Gravel:

1. Description:
   a. Non-biodegradable, UV-resistant, woven geotextile fabric.
   b. Material: Polyester Polypropylene or Polyethylene.
   c. Edges: Selvaged or finished to prevent separation of outer material.
   d. Calendar such that yarns will retain relative positions.
   e. Tied to be fully enclosed to prevent loss of internal material.

2. Performance Criteria:
   a. Minimum Bag Size: 14 inches wide by 24 inches long and 6 inches thick when filled.
   b. Nominal Weight Capacity: 50 lb.
   c. Minimum Fabric Denier: 1250.
   d. Minimum UV Rating: 4,000 hours.

C. Permanent Turf Reinforcement Mat (PTRM):

1. Non-Degradable Turf Reinforcement Mat: Meet specification requirements of United States Department of Transportation, Federal Highway Administration (FHWA) FP-03, Section 713.18.
2. Material: Nylon or other inert plastic not coated with chemical, substance or film.
3. Mesh Opening: Maximum 0.1 inch.

2.3 ACCESSORIES

A. Use products to tie and secure geotextile fabrics as recommended by geotextile manufacturer to prevent loss of internal material or movement of geotextile during performance of the Work.

PART 3 - EXECUTION

3.1 EXAMINATION

A. At least 72 hours before completing each of the structure excavations listed in G9 “Structural excavation” to the prescribed elevations, depths and extents shown on the Drawings or specified for the Work, notify Contractor’s independent geophysical testing firm to perform geophysical evaluation of the completed excavation. Submit geophysical results and interpretation of potential voids to Engineer as required prior to beginning backfilling.

B. Upon notification of a void meeting conditions for mitigation, Owner will direct Engineer to establish appropriate permanent void and water flow mitigation measures. Engineer will arrange for an inspection of the void by a qualified licensed consulting Geologist registered in the State of Texas and hired by the Engineer.

C. If Engineer, Engineer’s consulting Geologist or designated representative observes unusually large voids or unforeseen circumstances, other measures may be prescribed than those in this Section.

3.2 MITIGATION MEASURES

A. Class I Void Mitigation Measures: Temporary measures for a void at bottom of an excavation/trench or along a side wall of an excavation/trench.

1. Cover void opening with filter fabric.
   a. Minimum 3-foot distance from edge of void to edge of filter fabric.

2. Then cover void opening with plywood planking.

a. Minimum 1-foot distance from edge of void to edge of planking. Planking is to be placed to prevent backfill from entering void.

3. Finally, place rock or concrete block over planking to keep planking secured.
   a. Minimum weight of 5 pounds.

B. Class II Void Mitigation Measures: Permanent measures for a void at bottom of an excavation/trench.

1. For void openings greater than 30-inches deep, Engineer will provide direction to either hand pack 3 to 5-inch hard rock to provide stable bearing support and cover rock at opening with filter fabric or backfill entire void with low slump concrete (3,500 psi).
2. If 3 to 5-inch hard rock used, place low slump concrete (3,500 psi) to cover opening area and seal void at limits of excavation.
   a. Concrete: Minimum 18 inches thick within void opening extending minimum of 6 inches beyond edge of void.
   b. Seal void openings less than 30 inches deep entirely with concrete. Use form to ensure proper placement of a low slump concrete-seal.
   c. After void is covered, place flowable fill as bedding and backfill extending a minimum of 5 feet beyond edge of all voids in all directions.

3. For Class II voids, additional measures may be specified by Engineer, Engineer's consulting Geologist or Local Regulatory Agency representative (e.g., increase thickness of concrete and placement of rebar reinforcement in concrete, placement of a steel plate over void opening, etc.).

C. Class III Void Mitigation Measures: Permanent measures in wall of an excavation/trench.

1. Hand pack 3 to 5-inch hard rock to provide stable bearing support and cover rock at opening with filter fabric.
2. Hand pack void area with pea gravel-filled sealed polypropylene bags to provide stable bearing support to protect a void from infiltration of backfill material.
3. If a void is greater than 100 cubic feet or is located within a rock stratum that is structurally unstable, as determined by the Engineer or Engineer's consulting Geologist, use 3 to 5-inch hard rock behind gravel-filled polypropylene bags to prevent ground collapse.
4. As required by Engineer, Engineer's consulting Geologist or Local Regulatory Authority representative, connector pipes may be required to maintain air or water flow within a void bisected by excavation/trench.

5. After a void is filled, place low slump concrete (3,500 psi) to seal void opening. If needed, place a form to ensure a minimum thickness of concrete extends at least 18 inches into void.
6. In trenches, provide secondary containment of wastewater and storm sewer lines by outer carrier pipe or low slump concrete (3,500 psi) or flowable fill encasement.
   a. Design of carrier pipe must be reviewed by Engineer for all wastewater and storm sewer lines prior to approval of the mitigation plan by the Local Regulatory Authority. Provide stabilizing collars and other supports.
   b. Low Slump Concrete or Flowable Fill Encasement: Minimum 6-inch thickness on all sides of pipe extending minimum of 5 feet beyond edge of any voids.

c. If flowable fill encasement is proposed, submit pipe deflection and wall crushing calculations.

D. Class IV Void Mitigation Measures: Will not be used for this project.

E. Class V Void Mitigation Measures: Permanent measures for a void which extends through excavation/trench and contains actively flowing water.

1. Place Low Slump Concrete or Flowable Fill material into excavation or along pipe length as directed by Engineer or designated representative.
2. Place pea-gravel backfill material wrapped in PTRM one foot beyond limits of void in all directions. Place PTRM along areas between gravel material and trench walls/earth backfill overlapping at top.
3. Place minimum 3 feet of Low Slump Concrete or Flowable Fill into excavation or along pipe length on either side of gravel backfill material extending minimum of 1 foot above gravel backfill material. Use forms to control placement of concrete or flowable backfill material.

F. For very large voids, Engineer's Geologist will conduct a cave stability analysis and define specific mitigation measures. Implement specific mitigation measures per direction of Engineer or designated representative after the mitigation plan is approved by the Local Regulatory Authority.

3.3 FIELD QUALITY CONTROL

A. Special Inspections: Engineer will engage a qualified licensed Geologist to perform the following inspections.

1. Geologic and biologic inspection for temporary void protection.
2. Second void or water flow feature inspection.
3. Once daily inspections during excavation operations and prior to backfilling excavation/trench.

B. Testing Agency: Owner will engage a qualified testing agency to perform tests and inspections.

END OF SECTION 025731

© 2023 CDM Smith
All Rights Reserved

This page intentionally left blank.

© 2023 CDM Smith
All Rights Reserved

SECTION 031000 - CONCRETE FORMING AND ACCESSORIES

PART 1 - GENERAL

1.1 RELATED DOCUMENTS

A. Drawings and general provisions of the Contract, including General and Supplementary Conditions and Division 01 Specification Sections, apply to this Section.

1.2 SUMMARY

A. Section Includes:

1. Formwork for cast-in-place concrete.
2. Shoring and bracing.
3. Form accessories.
4. Form stripping.
5. Delegated design.

B. Related Requirements:

1. Section 032000 “Concrete Reinforcing”: Reinforcing steel and required supports for cast-in-place concrete.
2. Section 033000 “Cast-in-Place Concrete”: Cast-in-place concrete.
3. Section 033500 “Concrete Finishing”.
4. Section 050519 “Post-Installed Anchors” for testing of drilled in injection adhesive anchor system.
5. Section 055000 “Metal Fabrications”: Product requirements for metal fabrications for placement by this Section.
6. Various Sections in Divisions 26: Product requirements for electrical items for placement by this Section.
7. Section 315000 “Excavation Support and Protection”: Execution requirements for shoring and underpinning required by this Section.

1.3 DEFINITIONS

A. Structural Concrete: Concrete that is not architectural concrete.

1.4 COORDINATION

A. Coordinate Work of this Section with other Sections of Work in forming and placing openings, slots, reglets, recesses, sleeves, bolts, anchors, other inserts, and components of other Work.

1.5 ACTION SUBMITTALS

A. Section 013300 “Submittal Procedures”: Requirements for submittals.

B. Shop Drawings:

1. Indicate:

a. Formwork and shoring.
b. Pertinent dimensions, openings, details of construction, types of connections, materials, joint arrangement and details, ties and shores, location of framing, studding and bracing, and temporary supports.
c. Means of leakage prevention for concrete exposed to view in finished construction.
d. Notes to formwork erector showing size and location of conduits and piping embedded in concrete according to ACI 318.
e. Procedure and schedule for removal of shores and installation and removal of reshores.
f. Location and sequence of concrete placement.
g. Form release agent.
h. Form ties.
i. Bond breakers.

C. Review of submittals will be for appearance, performance, and strength of completed structure only. Approval by the Engineer will not relieve Contractor of responsibility for the strength, safety, or correctness of methods used, the adequacy of equipment, or from carrying out the work as shown on Contract Documents.

1.6 DELEGATED DESIGN SUBMITTALS

A. Submit signed and sealed Shop Drawings with design calculations and assumptions for formwork and shoring.

1. Indicate loads transferred to structure during process of concreting, shoring, and reshoring.
2. Include signed and sealed structural calculations to support design for project records. Calculations will not be reviewed.
3. Submit completed PE Certification Form for design of formwork in accordance with Section 013300. Complete PE Certification Form and stamp by a professional engineer registered in the State where project work site exists.

1.7 PRE-CONSTRUCTION MEETING

A. See Section 033000 “Cast-in-Place Concrete” for pre-construction meeting requirements.

1.8 INFORMATIONAL SUBMITTALS

A. Manufacturer's Certificate: Certify that products meet or exceed specified requirements.

B. Field Quality-Control Submittals: Indicate results of Contractor-furnished tests and inspections.

C. Certify that form release agent complies with Federal, State, and local VOC limitations.

1.9 QUALITY ASSURANCE

A. Perform Work according to ACI 347, ACI 301, ACI 318, and ACI 350.

B. For wood products furnished for Work of this Section, comply with AF&PA.

1.10 SYSTEM DESCRIPTION

A. Delegated Design Structural Design Responsibility: Provide forms, shoring, and reshoring designed by a professional engineer registered in the State of Texas. Design formwork in accordance with the requirements of ACI 301, ACI 318, ACI 347, and ACI 350. Comply with all applicable regulations and codes. Consider any special requirements due to the use of plasticized and/or retarded set concrete.

1.11 QUALIFICATIONS

A. Licensed Professional: Professional engineer experienced in design of specified Work and licensed in the State of Project location.

1.12 DELIVERY, STORAGE, AND HANDLING

A. Store materials off ground in ventilated and protected manner to prevent deterioration from moisture.

PART 2 - PRODUCTS

2.1 PERFORMANCE AND DESIGN CRITERIA

A. Delegated Design: Engage a qualified professional engineer, as defined in Section 014000 "Quality Requirements," to design, engineer, and construct formwork, shoring, and bracing according to ACI 318 ACI 347,, ACI 347.2R ACI 350, conforming to International Building Code requirements to achieve concrete shapes, lines, and dimensions as indicated and required by project conditions.

2.2 FORMS, GENERAL

A. Make forms for cast-in-place concrete of wood, steel, or other approved materials. Design and construct all forms to provide a flat, uniform concrete surface requiring no grinding, repairs, or finishing except as specified in Section 033500 “Concrete Finishing.”

1. Construct wood forms of sound lumber or plywood free from knotholes and loose knots.
2. Construct steel forms to produce surfaces equivalent in smoothness and appearance to those produced by new plywood panels.

B. Provide rigid forms that will not deflect, move, or leak. Design forms to withstand high hydraulic pressures resulting from rapid filling of forms and heavy high frequency vibration of the concrete. Limit deflection to 1/400 of each component span. Lay out form joints in a uniform pattern or as indicated on Drawings.

C. Dress and match boards. Sand plywood smooth and fit adjacent panels with tight joints. Tape, gasket, plug, or caulk joints and gaps in forms to provide watertight joints that will withstand placing pressures without exceeding specified deflection limit or creating surface patterns.

D. Provide 3/4 inch chamfer on form corners unless otherwise indicated.

2.3 FORMS FOR STRUCTURAL CONCRETE

A. Plywood Forms:

1. Make forms for exposed and non-submerged exterior and interior concrete of new and unused Plyform exterior grade plywood panels.
2. Species: Douglas fir or Spruce.
3. Grade: B grader or better.
4. Edges: Clean and true.
5. Exposed Concrete:

    a. Comply with APA/EWA PS 1.
    b. Panels: Full size, 4 by 8 feet.
    c. Label each panel with grade trademark of APA/EWA

6. Surfaces to Receive Membrane Waterproofing:

    a. Minimum Thickness: 5/8 inch.
    b. Grade: APA/EWA "B-B Plyform Structural I Exterior."

7. "Smooth Finish" Indicated on Drawings:

    a. Minimum Thickness: 3/4 inch.
    b. Grade: APA/EWA "HD Overlay Plyform Structural I Exterior."

8. Design and construct forms to provide a flat, uniform concrete surface requiring no grinding, repairs, or finishing, except as specified in Section 033500 “Concrete Finishing.”

B. Lumber Forms:

1. Applications: Edge forms and unexposed finish concrete.
2. Description:

    a. Shiplapped or tongue and groove.
    b. Surface boards on four sides.

3. Material: Standard grade, Douglas fir according to WCLIB Standard No. 17.
4. Width: 8 inches.

C. Preformed Steel Forms:

1. Description: Matched, tightly fitted, and stiffened to support weight of concrete without deflection detrimental to tolerances and appearance of finished surfaces.
2. Minimum Thickness: 16 gage.

D. Steel Forms: Description: Sheet steel, suitably reinforced.

E. Framing, Studding, and Bracing: Stud or No. 3 structural light-framing grade.

2.4 FORMWORK ACCESSORIES

A. Form Ties:

1. Type: Removable Snap off; cone.
2. Material: Galvanized or Stainless-Steel.
3. Furnish waterproofing washer.
4. Back Break Dimension: 1 inch.
5. Free of defects capable of leaving holes larger than 1 inch in concrete surface.
6. Manufacturers: Provide from one of the following or equal:

    a. Heckmann Building Products, Inc.
    b. Symons by Dayton Superior.
    c. Wall-Ties & Forms, Inc.

7. Coil and Wire Ties: Provide ties manufactured so that after removal of projecting part, no metal remains within 1-1/2 inch of concrete face. The part of the tie to be removed shall be at least 1/2-inch diameter or be provided with a plastic or wooden cone at least 1/2 inch diameter and 1-1/2 inch long. Provide cone washer type form ties in concrete exposed to view.
8. Flat Bar Ties for Panel Forms: Provide ties that have plastic or rubber inserts with a minimum depth of 1-1/2 inch and manufactured to permit patching of the tie hole.
9. Provide ties for liquid retaining structures that have a steel waterstop tightly attached to each strut or that have a neoprene rubber washer on each strut.
10. Alternate form ties consisting of tapered through-bolts at least 1 inch in diameter at smallest end or through-bolts that utilize a removable tapered sleeve of same minimum size may be used. Install in forms so that large end is, where applicable, on liquid or backfilled side of the wall. Clean, fill, and seal form tie hole with rubber plug installed from the liquid or backfilled side and non-shrink cement grout to provide watertight form tie holes. Make repairs needed to make watertight.
11. Alternate form ties specified in Paragraph above may be used when forms are to be set against previously placed or existing concrete walls. Use in conjunction with cast-in threaded inserts or drilled-in threaded anchors so that no metal remains within expansion joint upon removal of tapered through bolt. Conform to requirements specified in above Paragraph.

B. Spreaders:

1. Description: Standard, non-corrosive, metal-form clamp assembly of type acting as spreaders and leaving no metal within 1 inch of concrete face.
2. Wire ties, wood spreaders, or through bolts are not permitted.

C. Form Release Agent:

1. Description: Colorless that will not stain concrete or absorb moisture or impair natural bonding or color characteristics of coating intended for use on concrete.
2. Manufacturers: Provide from one of the following or equal:

   a. Architectural Concrete Chemicals, LLC.
   b. Nox-Crete Products Group.

3. Form Release Agent. Coat form surfaces in contact with concrete with an effective, non-staining, non-residual, water based, bond-breaking form coating, unless otherwise indicated or specified. Form release agent shall not impair the bond of waterproofing, dampproofing, or other coatings.
4. For concrete surfaces which are to be painted, use forms with high density overlay or a similar material which does not require a form release agent unless Contractor can substantiate to satisfaction of the Engineer that form release agent will not remain on formed surface after it is stripped.

D. Bond Breaker:

1. Bond breakers for precast and tilt-up construction when cast against concrete shall be a non-staining, non-residual type, which will provide a positive bond prevention.
2. Manufacturers: Provide from one of the following or equal:

   a. Dayton Superior Specialty Chemical Corporation: Sure-Lift (J-6).
   b. Universal Form Clamp Co: Super Clean and Tilt.
   c. Nox-Crete Products Group: Silcoseal Select.

E. Corners, Recesses for Joint Sealant, Rustications, and Drip Edges:

1. Type: Chamfer.
2. Provide rustications as indicated. Mill and plane smooth moldings for chamfers and rustications. Provide rustications and chamfer strips of nonabsorbent material, compatible with the form surface and fully sealed on all sides to prevent the loss of paste or water between the two surfaces.
3. Size: As indicated on Drawings.
4. Lengths: Maximum possible.
5. Manufacturers: Provide from one of the following or equal:

   a. BoMetals, Inc.
   b. Wall-Ties & Forms, Inc.

F. Nails, Spikes, Lag Bolts, Anchorages: Size, strength, and character to maintain formwork in place while placing concrete.

PART 3 - EXECUTION

3.1 EXAMINATION

A. Verify lines, levels, and centers before proceeding with formwork.

B. Verify that dimensions agree with Drawings and Shop Drawings.

C. Proceed with installation only after unsatisfactory conditions have been corrected.

3.2 INSTALLATION

A. Earth Forms: Not permitted.

B. Formwork:

1. Provide top form for sloped surfaces steeper than 1.5 horizontal to 1 vertical to hold shape of concrete during placement, unless it can be demonstrated that top forms can be omitted.
2. Construct forms to correct shape and dimensions, mortar-tight, braced, and of sufficient strength to maintain shape and position under imposed loads from construction operations.
3. Camber forms where necessary to produce level finished soffits unless indicated otherwise on Drawings.
4. Positioning:

    a. Carefully verify horizontal and vertical positions of forms.
    b. Correct misaligned or misplaced forms before placing concrete.

5. Complete wedging and bracing before placing concrete.
6. Erect formwork, shoring, and bracing according to ACI 301, 318, 347, and 350.
7. Obtain approval of Engineer before framing openings in structural members not indicated on Drawings.
8. Install chamfer strips for corners, recesses for sealant, rustications, and drip edges exposed corners of beams, and walls.
9. Form Release Agent:

    a. Apply according to manufacturer instructions.
    b. Apply prior to placement of reinforcing steel, anchoring devices, and embedded items.
    c. Do not apply form release agent if concrete surfaces are indicated to receive special finishes or applied coverings that may be affected by agent.
    d. Soak inside surfaces of untreated forms with clean water, and keep surfaces coated prior to placement of concrete.
    e. Apply form coatings before placing reinforcing steel.

10. Leave forms in place for minimum number of days according to ACI 347.
11. Do not remove forms or bracing until concrete has gained sufficient strength to carry its own weight and imposed loads and until the concrete has attained a strength of at least 70

percent of its specified design strength for beams and slabs and at least 30 percent of its specified design strength for walls and vertical surfaces.

12. Do not remove shores until concrete has attained at least 70 percent of its specified design strength and also sufficient to support safely its own weight and the construction live load on it.
13. Loosen forms carefully; do not wedge pry bars, hammers, or tools against finish concrete surfaces scheduled for exposure to view.
14. Stripping:

    a. Arrange and assemble formwork to permit dismantling and stripping.
    b. Do not damage concrete during stripping.
    c. Permit removal of remaining principal shores.

15. Be responsible for damage resulting from removal of forms and make repairs at no additional compensation. Leave in place forms and shoring for horizontal structural members in accordance with ACI 301 and ACI 347. Conform to requirements for form removal specified in Section 033000 “Cast-in-Place Concrete.”
16. Store removed forms in manner that surfaces to be in contact with fresh concrete will not be damaged.
17. Discard damaged forms.
18. Reuse and Coating of Forms:

    a. Thoroughly clean forms and reapply form coating before each reuse.
    b. For exposed Work, do not reuse forms with damaged faces or edges.
    c. Apply form coating to forms according to manufacturer instructions.
    d. Do not coat forms for concrete indicated to receive "scored finish."

19. Do not patch formwork.
20. Form Cleaning:

    a. Clean forms as erection proceeds to remove foreign matter within forms.
    b. Clean formed cavities of debris prior to placing concrete.
    c. Flush with water or use compressed air to remove remaining foreign matter.
    d. Ensure that water and debris drain to exterior through cleanout ports.
    e. Cold Weather:

        1) During cold weather, remove ice and snow from within forms.
        2) Do not use de-icing salts.
        3) Do not use water to clean out forms, unless formwork and concrete construction proceed within heated enclosure; use compressed air or other dry method to remove foreign matter.

C. Forms for Smooth Finish Concrete:

1. Use steel, plywood, or lined-board forms.
2. Use clean and smooth plywood and smooth sheet form liners, uniform in size, and free from surface and edge damage capable of affecting resulting concrete finish.
3. Install smooth sheet form lining with close-fitting square joints between separate sheets without springing into place.
4. Use full-sized sheets of smooth sheet form liners and plywood wherever possible.
5. Tape joints to prevent protrusions in concrete.

6. Apply forming and strip wood forms in a manner to protect corners and edges.
7. Level and continue horizontal joints.

D. Forms for Surfaces to Receive Membrane Waterproofing:

1. Use plywood or steel forms.
2. After erection of forms, tape form joints to prevent protrusions in concrete.

E. Framing, Studding, and Bracing:

1. Framing, Studding, and Bracing: Stud or No. 3 structural light-framing grade.
2. Maximum Spacing of Studs:

    a. Boards: Maximum 16 inches o.c.
    b. Plywood: 12 inches o.c.

3. Size framing, bracing, centering, and supporting members for sufficient strength to maintain shape and position under imposed loads from construction operations.
4. Construct beam soffits of material minimum 2 inches thick.
5. Distribute bracing loads over base area on which bracing is erected.
6. When placed on ground, protect against undermining, settlement, and accidental impact.

F. Form Anchors and Hangers:

1. Do not use anchors and hangers leaving exposed metal at concrete surface.
2. Symmetrically arrange hangers supporting forms from structural-steel members to minimize twisting or rotation of member.
3. Penetration of structural-steel members is not permitted.

G. Inserts, Embedded Parts, and Openings:

1. Make provisions for pipes, sleeves, anchors, inserts, anchor slots, nailers, waterstops, and other features.
2. Do not embed wood or uncoated aluminum in concrete.
3. Obtain installation and setting information for embedded items furnished under other Sections.
4. Securely anchor embedded items in correct location and alignment prior to placing concrete.
5. Ensure that conduits and pipes, including those made of coated aluminum, meet requirements of ACI 318 regarding size and location limitations.
6. Install formed openings for items to be embedded in or passing through concrete Work.
7. Locate and set in place items required to be cast directly into concrete.
8. Install accessories straight, level, and plumb, and ensure that items are not disturbed during concrete placement.
9. Frame openings in concrete where indicated on Drawings.
10. Establish exact locations, sizes, and other conditions required for openings and attachment of Work specified under other Sections.
11. Coordinate Work to avoid cutting and patching of concrete after placement.
12. Temporary Openings:

    a. Provide temporary ports or openings in formwork as required to facilitate cleaning

b. Provide removable cleanout sections or access panels at bottoms of forms to permit inspection and effective cleaning of loose dirt, debris, and waste material.
c. Locate openings at bottom of forms to allow flushing water to drain.
d. Remove chips, sawdust, and other debris.
e. Thoroughly blow out forms with compressed air just before concrete is placed and inspection.
f. Clean forms and surfaces against which concrete is to be placed.
g. Close temporary openings with tight-fitting panels, flush with inside face of forms, and neatly fitted such that joints will not be apparent in exposed concrete surfaces.

H. Form Ties:

1. Provide sufficient strength and quantity to prevent spreading of forms.
2. Place ties at least 1 inch away from edge of concrete.
3. Leave inner rods in concrete when forms are stripped.
4. Space form ties equidistant, symmetrical, and aligned vertically and horizontally unless indicated otherwise on Drawings.

I. Arrange formwork to allow proper erection sequence and to permit form removal without damage to concrete.

J. Construction Joints:

1. Install surfaced pouring strip where construction joints intersect on exposed surfaces to provide straight line at joints.
2. Just prior to subsequent concrete placement, remove strip, and tighten forms to conceal shrinkage.
3. Appearance:

a. Show no overlapping of construction joints.
b. Construct joints to present same appearance as butted plywood joints.

4. Arrange joints in continuous line straight, true, and sharp.

K. Embedded Items:

1. Make provisions for pipes, sleeves, anchors, inserts, reglets, anchor slots, nailers, waterstops, and other features.
2. Do not embed wood or uncoated aluminum in concrete.
3. Obtain installation and setting information for embedded items furnished under other Sections.
4. Securely anchor embedded items in correct location and alignment prior to placing concrete.
5. Ensure that conduits and pipes, including those made of coated aluminum, meet requirements of ACI 318 regarding size and location limitations.

L. Screeds:

1. Set screeds and establish levels for tops of concrete slabs.
2. Slope slabs to drain where required or as indicated on Drawings.

3. Before depositing concrete, remove debris from space to be occupied by concrete, thoroughly wet forms, and remove freestanding water.

M. Screed Supports:

1. For concrete over waterproof membranes and vapor retarder membranes, use cradle-, pad-, or base-type screed supports that will not puncture membrane.
2. Staking through membrane is not permitted.

N. Cleanouts and Access Panels:

1. Provide removable cleanout sections or access panels at bottoms of forms to permit inspection and effective cleaning of loose dirt, debris, and waste material.
2. Clean forms and surfaces against which concrete is to be placed.
3. Remove chips, sawdust, and other debris.
4. Thoroughly blow out forms with compressed air just before concrete is placed.

3.3 TOLERANCES

A. Construct formwork to maintain tolerances according to ACI 301, ACI 350.5, and ACI 117.

B. Formed Surface Including Mass Concrete, Pipe Encasement, Electrical Raceway Encasement and Other Similar Installations: No minimum requirements for surface irregularities and surface alignment. The overall dimensions of the concrete shall be plus or minus 1 inch from the intended surface indicated.

3.4 FIELD QUALITY CONTROL

A. Inspection:

1. Inspect erected formwork, shoring, and bracing to ensure that Work complies with formwork design and that supports, fastenings, wedges, ties, and items are secure.
2. Notify Engineer after placement of reinforcing steel in forms at least six working hours prior to proposed concrete placement.
3. Schedule concrete placement to permit formwork inspection before placing concrete.
4. Failure of forms to comply with specified requirements or to produce concrete complying with requirements specified shall be grounds for rejection of that portion of concrete work. Repair or replace rejected work as directed by the Engineer at no additional compensation. Make required repair or replacement subject to requirements of these Specifications and approval of Engineer.

3.5 SCHEDULE

A. Concrete Not Exposed to View: Site-fabricated plywood coated with form oil.

B. Concrete Exposed to View: New and unused Plyform exterior grade plywood panels or steel forms.

C. Supported Floor Slabs: Wood forms or steel forms.

END OF SECTION 031000.00

© 2023 CDM Smith
All Rights Reserved

SECTION 031500 - CONCRETE JOINTS AND ACCESSORIES

PART 1 - GENERAL

1.1 RELATED DOCUMENTS

A. Drawings and general provisions of the Contract, including General and Supplementary Conditions and Division 01 Specification Sections, apply to this Section.

1.2 SUMMARY

A. Section includes construction of durable, watertight joints in concrete structures.

B. Related Requirements:

1. Section 018819 “Tightness Testing Performance Requirements” for watertightness test of water containing structures.
2. Section 031000 “Concrete Forming and Accessories” for formwork.
3. Section 032000 “Concrete Reinforcing” for reinforcing.
4. Section 033000 “Cast-In-Place Concrete” for cement, and related concrete products.
5. Section 033500 “Concrete Finishing” for concrete finish related work.
6. Section 036000 “Grouting” for grout related work.
7. Section 055000 “Metal Fabrications” for various metal fabrications.
8. Section 071113 “Bituminous Dampproofing” for dampproofing the exterior of subgrade concrete walls.

1.3 ACTION SUBMITTALS

A. Plastic Waterstops: Product data including sample, catalogue cut, dimensions, technical data, storage requirements, splicing methods, conformity to CRD standards, details and samples of factory fabrications.

B. Premolded Joint Fillers: Product data including location of use, sample, catalogue cut, technical data, storage requirements, and conformity to ASTM standards.

C. Preformed Expansion Joint Material: Product data including location of use, catalogue cut, dimensions, technical data, storage requirements, installation instructions, and conformity to ASTM standards.

D. Bond Breaker: Product data including location of use, catalogue cut, technical data, storage requirements, and application instructions.

E. Sealant: Product data including location of use, catalogue cut, technical data, storage requirements, mixing and application instructions, and conformity to ASTM standards.

F. Shop Drawings: Submit plastic waterstop placement drawings including factory fabricated fitting.

1.4 INFORMATIONAL SUBMITTALS

A. System and Material Certificates:

1. Certify that materials used within joint system are compatible with each other.

1.5 QUALITY ASSURANCE

A. Sealant Manufacturer's Field Representative Qualifications:

1. Experience: Performed at least five projects of similar size and complexity within last five years. Be present at work site prior to mixing to instruct on mixing, application, and inspection procedures. Inspect finish of prepared surfaces prior to sealant application.
2. Make at least one additional visit to site as the work progresses and report on each visit to Contractor and the Engineer. Advise whether the application is in accordance with this Section and manufacturer's printed installation instructions.

B. Installer Qualifications: Fabricator of products.

PART 2 - PRODUCTS

2.1 GENERAL REQUIREMENTS

A. Use materials in a given joint that are compatible with one another. Coordinate selection of suppliers and products to provide compatibility. Do not use asphaltic bond breakers or asphaltic joint fillers in joints receiving sealant.

B. Product Experience: Provide plastic waterstops products specifically manufactured for intended purpose and have five years' successfully experience in similar applications.

2.2 MATERIALS - STANDARD WATERSTOPS

A. Plastic Waterstops: Conform to CRD C572, fabricate by extruding elastomeric plastic compound with virgin polyvinylchloride as basic resins and with compound containing no reprocessed materials. Incorporate an integral fastening system or provide with grommets or prepunched holes between outermost ribs at a spacing of 12 inches on center.

1. Waterstops For Non-Expansion Joints and Joints Indicated:

a. Type: Ribbed type waterstops.
b. Minimum Tensile Strength: 1,750 psi per ASTM D638.
c. Size: 6 inches by 3/8 inch.
d. Acceptable Manufacturers: Provide products manufactured by one of the following or equal:

1) Greenstreak Plastic Products: Style 679.
2) Paul Murphy Plastics Co.: Style FR-6380.
3) Vinylex Corp.: Style R6-38.

2. Factory Fabrications:

a. Provide factory fabrications for waterstop changes of direction, transitions, and intersections:

1) Intersections: Vertical ells, flat ells, vertical tees, flat tees, vertical crosses, flat crosses, and special, unusual, or complicated intersections including waterstop intersections of different sizes or configurations, and intersections due to joint offsets.

b. Make and inspect factory fabrications by waterstop manufacturer.
c. Provide stub ends of sufficient length to leave only straight butt joints for field splicing.

2.3

2.3 MATERIALS - ACCESSORIES

A. Premolded Joint Filler - Structures: ASTM D1752, Type III, self-expanding cork.

1. Thickness: 1 inch, unless otherwise indicated.

B. Bond Breaker:

1. Bond Breaker Tape: Adhesive-backed glazed butyl or polyethylene tape that adheres to premolded joint filler or concrete surface. Provide tape of same width as the joint.
2. Bond breaker for concrete other than where tape is indicated or specified: Either bond breaker tape or a non-staining type bond prevention coating.

a. Acceptable Coating Manufacturers: Provide products manufactured by one of the following or equal:

1) Cresset Chemical Company: Crete-Lease Bond Breaker for Tilt-Up.
2) Dayton Superior: Sure-Lift J-6 WB.
3) Nox-Crete: Silcoseal Select.

3. Bond Breaker for Expansion Joint Dowels: ASTM C309, Type 2, Class A, water-based white pigmented curing compound.

C. Preformed Expansion Joint Material: Non-extrudable watertight strip material used to fill expansion joints between structures meeting following criteria:

1. Compressibility: Capable of being compressed at least 40 percent for 70 hours at 68 degrees F and subsequently recovering at least 20 percent of its original thickness in first 30 minutes after unloading.
2. Basis-of-Design: Provide products as manufactured by Chase Construction Products, or equal:

a. Phyzite 380.

D. Grout: Non-metallic, non-shrinking as specified in Section 036000 “Grouting.”

2.4 MATERIALS - SEALANTS

A. Sealant:

1. Comply with ASTM C920 for following conditions:

   a. Sealant for Joints in Horizontal Surfaces: Type S or M, Grade P or NS, Class 25.
   b. Sealant for Joints in Sloping and Vertical Surfaces: Type S or M, Grade NS, Class 25.
   c. Sealant in Pedestrian and Vehicular Traffic Areas: Use T_2.
   d. Sealant in Non-Traffic Areas: Type S or M, Grade P, Use NT.

2. Provide sealants made for use in continuous immersion in contact with wastewater. Provide gray colored sealants unless otherwise indicated, specified, or approved.

PART 3 - EXECUTION

3.1 INSTALLATION - WATERSTOPS, GENERAL

A. Install waterstops for joints indicated and according to manufacturer's published installation instructions and approved submittals.

B. Include waterstops continuous around corners and intersections to provide a continuous seal.

C. Provide a minimum number of connections or splices. Replace connections or splices that do not meet specified requirements at no additional cost to Owner.

D. Secure waterstops in joints before concrete is placed.

E. Install plastic waterstops so that half of width is embedded on each side of joint. Provide waterstops completely embedded in void-free concrete.

F. Terminate waterstops 2 inch below exposed top of walls.

G. Protect waterstops from damage in intervals between placing waterstops and subsequent placing of concrete. Replace damaged or punctured waterstops at no additional cost to Owner.

H. Protect plastic waterstops from sunlight when exposed more than 30 days between concrete placements.

I. Provide waterstops free from form release agent, bond breaker, dirt, concrete splatter, ice, mortar, paint, or other deleterious material that could reduce or destroy bond between waterstop and adjacent concrete.

3.2 INSTALLATION - PLASTIC WATERSTOPS

A. Field Splices: Make only straight butt joints. Fabricate splices on a bench.

1. Use a power saw and guide to cut straight ends to be spliced.

2. Heat fuse weld splices using a Teflon coated thermostatically controlled waterstop splicing iron following manufacturer's recommendations.
3. Provide finished splices having a cross-section that is dense and free of porosity. Engineer may conduct destructive tests of splices by cutting along one-half of splice length and by cutting perpendicular to splice at several locations on remaining half of splice length.
4. Completed Splices: Exhibit a continuous and uniform bead of excess melted material with welded material looking similar to parent material.
5. Show no misalignment of ribs greater than 1/16 inch, lack of fusion, porosity, pinholes, cracks, charred or burnt material, bubbles, or separation of cooled splice when bent by hand. If a splice displays any of these defects, reject the splice, recut back at least 1 inch from rejected splice on each side, and reweld.

B. Secure waterstops in wall joints before concrete is placed. If waterstop does not incorporate an integral fastening system, grommets, or prepunched holes, drill holes in waterstops between outermost ribs at each edge. Center waterstop in the joint. Tie both edges of waterstop to reinforcing steel with tie wire as specified for tying reinforcing steel. Secure waterstop centered on and perpendicular to joint and to maintain its position during concrete placement.

C. Space waterstop ties to match spacing of adjacent reinforcing, but ties need not be spaced closer than 12 inches on center.

D. Clamp horizontal waterstops in slabs in position with form bulkhead, unless previously set in concrete. Lift waterstop edge while placing concrete below the waterstop. Manually force waterstop against and into placed concrete and cover with fresh concrete, to provide complete encasement of waterstop in concrete.

3.3 INSTALLATION - CONSTRUCTION JOINTS

A. Make construction joints only at locations indicated or as approved by the Engineer. Submit additional or relocation of construction joints proposed by Contractor to the Engineer for written approval. Do not eliminate construction joints.

B. Locate additional or relocated joints where they least impair member strength. In general, locate joints within middle third of spans of slabs, beams, and girders.

1. If a beam intersects a girder at joint, offset joint a distance equal to twice the width of member being connected.
2. Locate joints in walls and columns at underside of floors, slabs, beams, or girders and at tops of footings or floor slabs.
3. Do not locate joints between beams, girders, column capitals, or drop panels and the slabs above them. Do not locate joints between brackets or haunches and walls or columns supporting them.

C. Unless otherwise indicated, provide joints perpendicular to main reinforcement. Continue reinforcing steel through joint as indicated.

D. Provide waterstops in wall and slab construction joints in liquid retaining structures and at other locations indicated.

E. Roughened Construction Joints:

1. At construction joints and at concrete joints indicated, uniformly roughen concrete surface with chipping tools to expose a fresh face 1/4 inch of a full amplitude, distance between high and low points and side to side.
2. Thoroughly clean joint surfaces of loose or weakened materials by waterblasting or sandblasting and prepare for bonding.
3. At least two hours before and again shortly before new concrete is deposited, saturate joints with water.
4. After glistening water disappears, coat joints with neat cement slurry mixed to consistency of very heavy paste. Apply a coating to surfaces at least 1/8 inch, scrubbed-in by means of stiff bristle brushes. Deposit new concrete before neat cement dries.

3.4 INSTALLATION - SEALANTS

A. Install sealants in clean dry recesses free of frost, oil, grease, form release agent, loose material, laitance, dirt, dust, and other deleterious materials that will impair bond.

B. Apply sealant conforming to manufacturer's recommendations including concrete cure, temperature, moisture, mixing, primer, primer cure time, joint and recess preparation, tooling, and curing.

C. Apply masking tape to each side of joint prior to sealant installation. Remove masking tape afterwards, along with any spillage to leave a sealant installation with neat straight edges.

3.5 INSTALLATION - PREFORMED EXPANSION JOINT MATERIAL

A. Install preformed expansion joint material in conformance with manufacturer's recommendations; including surface preparation, adhesive installation, heat welding, and set time.

3.6 FIELD QUALITY CONTROL

A. Manufacturer's Field Service: Engage a factory-authorized service representative to inspect system components verifying that installation conforms to manufacturer’s installation instructions.

1. Prepare test and inspection reports.

3.7 CLEANING AND PROTECTION

A. Clean adjacent surfaces removing excess spills.

B. Protect installed products until subsequent work is installed. For exposed materials, protect from damage until Substantial Completion.

END OF SECTION 031500

© 2023 CDM Smith
All Rights Reserved

SECTION 032000 - CONCRETE REINFORCING

PART 1 - GENERAL

1.1 RELATED DOCUMENTS

A. Drawings and general provisions of the Contract, including General and Supplementary Conditions and Division 01 Specification Sections, apply to this Section.

1.2 SUMMARY

A. Section Includes:

1. Reinforcing bars.
2. Welded wire fabric.
3. Reinforcement accessories.

B. Related Requirements:

1. Section 031000 “Concrete Forming and Accessories”: Form materials, and accessories required to form cast-in-place concrete.
2. Section 033000 “Cast-in-Place Concrete”: Cast-in-place concrete.
3. Section 033500 “Concrete Finishing”: Reinforcement for concrete floor toppings.
4. Section 050519 “Post-Installed Anchors and Reinforcing Bars”: Post-installed reinforcing bars.

1.3 COORDINATION

A. Coordinate Work of this Section with placement of formwork, formed openings, masonry dowels, and other Work.

1.4 PREINSTALLATION MEETINGS

A. Preinstallation Conference: Conduct conference at Project site.

B. Convene minimum two weeks prior to commencing Work of this Section. Hold a preinstallation conference to review requirements for reinforcement placement, and jointing. Notify all parties involved, including the Engineer. Prepare an agenda for meeting take meeting minutes, and distribute to meeting attendees.

C. Review special inspection and testing, and Contractor’s inspecting agency procedures for field quality control; construction joint, and isolation joints; anchor rod and anchorage device installation tolerances; steel reinforcement installation, and concrete protection.

D. Attendees:

1. Owner.
2. Resident Engineer.
3. Contractor.
4. Engineer.
5. Manufacturer Representative.

1.5 ACTION SUBMITTALS

A. Shop Drawings:

1. Indicate bar sizes, spacings, locations, splice locations, and quantities of reinforcing steel and welded wire fabric.
2. Indicate bending and cutting schedules.
3. Indicate supporting and spacing devices.
4. Placement Drawings:

   a. Walls: Show elevations from outside, looking towards the structure, at a minimum scale of 1/4 inch to one foot.
   b. Slabs: Show top and bottom reinforcement on separate plan views, as needed for clarity.
   c. Beams and Columns: Show schedules with sections, elevations, and stirrup/tie spacing.
   d. Show additional reinforcement around openings, at corners and at other locations indicated, diagrams of bent bars, arrangements, and assemblies, all as required for the fabrication and placement of concrete reinforcement.
   e. Reference bars to same identification marks shown on bar bending details. Identify bars to have special coatings or to be of special steel or special yield strength.

B. Samples: Two samples of each type of mechanical reinforcing steel coupling system.

1.6 INFORMATIONAL SUBMITTALS

A. Manufacturer's Certificate: Certify that products meet or exceed specified requirements.

B. Submit certified copies of mill test report of reinforcement materials analysis.

C. Certified copy of test reports for each foreign manufactured steel proposed for use. Provide tests specifically made for this project by a domestic independent testing laboratory certified to perform the tests. Test for conformity to applicable ASTM Standard.

D. Welder Certificates: Certify welders and welding procedures employed on Work, verifying AWS qualification within previous 12 months.

E. Field Quality-Control Submittals: Indicate results of Contractor-furnished tests and inspections.

1.7 QUALITY ASSURANCE

A. Perform Work according to ACI 318 and ACI 350.

B. Prepare Shop Drawings according to ACI SP-66.

C. Welding Qualifications: Qualify procedures and personnel according to the following:

1. AWS D1.1/D1.1M, "Structural Welding Code - Steel."

1.8 DELIVERY, STORAGE, AND HANDLING

A. Inspection: Accept materials on Site in manufacturer's original packaging and inspect for damage.

B. Ship and store reinforcement with bars of same size and shape fastened in bundles with durable tags, marked in a legible manner with waterproof markings showing same "mark" designations as those shown on submitted placement drawings. Indicate that reinforcing is weldable on tags for ASTM A706 reinforcing and for ASTM A615 reinforcing meeting specified requirements in PART 2.

C. Store materials according to manufacturer instructions.

D. Protection:

1. Protect materials from moisture by storing off ground, in clean, and dry location.
2. Provide additional protection according to manufacturer instructions.

1.9 EXISTING CONDITIONS

A. Field Measurements:

1. Verify field measurements prior to fabrication.
2. Indicate field measurements on Shop Drawings.

PART 2 - PRODUCTS

2.1 REINFORCEMENT

A. Reinforcing Steel:

1. Comply with ASTM A615.
2. Yield Strength: 60 ksi.
3. Billet Bars: Deformed.
4. Finish: Uncoated.

B. Welded Plain Wire Fabric:

1. Comply with ASTM A1064.
2. Configuration: Flat sheets or Coiled rolls.
3. Finish: Uncoated.

2.2 FABRICATION

A. Fabricate concrete reinforcement according to ACI 318 and ACI 350.

B. Form standard hooks for 180-degree bends, 90-degree bends, stirrups and tie hooks as indicated.

C. Form reinforcement bends with minimum diameters according to ACI 318 and ACI 350.

D. Bend bars cold. Do not straighten or rebend bars.

E. Bend bars around a revolving collar having a diameter not less than that recommended by the CRSI or ACI 318.

F. Saw cut bar ends that are to be butt spliced, placed through limited diameter holes in metal, or threaded. Terminate saw cut ends in flat surfaces within 1-1/2 degrees of a right angle to the axis of the bar.

G. Form ties and stirrups as indicated.

H. Weld reinforcement, only where indicated or specifically approved by Engineer. Weld reinforcement conforming to AWS D1.4.

2.3 ACCESSORY MATERIALS

A. Tie Wire:

1. Minimum 16 gage, annealed type. Use black wire to tie uncoated reinforcing.

B. Reinforcing Steel Accessories:

1. Plastic Protected Wire Bar Supports: CRSI Bar Supports, Class 1 - Maximum Protection.
2. Stainless Steel Protected Wire Bar Supports: CRSI Bar Supports, Class 2 - Moderate Protection with legs made wholly from stainless steel wire.
3. Precast Concrete Bar Supports: CRSI Bar Supports, Precast Concrete Bar Supports. Precast concrete blocks that have equal or greater strength than the surrounding concrete.

C. Reinforcing Splicing Devices:

1. Type: Mechanical threaded; full tension and compression.
2. Use only where indicated. Meet all ACI 318 requirements. Provide threaded type with cap on female end to exclude dirt, debris, and wet concrete. Torque couplers to manufacturer's recommended value.
3. Unless otherwise indicated, mechanical reinforcing splicing devices shall produce a splice strength in tension or compression of not less than 125 percent of ASTM specified

minimum yield strength of reinforcing bar. Base yield strength on Grade 60 reinforcing unless otherwise indicated or specified.

4. Compression type mechanical splices shall provide concentric bearing from one bar to other bar.
5. Size: To fit joined reinforcing.
1. Manufacturers:

    a. ERICO.
    b. Dayton Superior.
    c. Or approved equal.

PART 3 - EXECUTION

3.1 INSTALLATION

A. Comply with CRSI 10-MSP for surface condition, bending, spacing and tolerances of placement for reinforcement. Provide the amount of reinforcing indicated at the spacing and clearances indicated on the Drawings.

B. Do not weld reinforcing steel bars either during fabrication or erection unless indicated or as specified herein, or unless prior written approval has been obtained from Engineer. Remove immediately all bars that have been welded, including tack welds, without such approval. Comply with AWS D1.4 when welding of reinforcement is indicated, specified, or approved.

C. Reinforcing steel interfering with the location of other reinforcing steel, piping, conduits, or embedded items may be moved within the specified tolerances or one bar diameter, whichever is greater. Obtain the approval of Engineer if greater displacement of bars to avoid interference is needed. Do not cut reinforcement to install inserts, conduits, mechanical openings, or other items without the prior approval of Engineer.

D. Place, support, and secure reinforcement against displacement. Secure dowels in place before placing concrete.

E. Set wire ties with ends directed into concrete, not toward exposed concrete surfaces.

F. Do not deviate from required position beyond specified tolerance.

G. Do not field bend reinforcing unless indicated or specifically authorized in writing by Engineer. Cold-bend bars indicated or authorized to be field bent around the standard diameter spool specified in the CRSI. Do not heat bars. Closely inspect the reinforcing steel for breaks. Replace, repair by cutting out damaged bars and splicing new bars using exothermic welding type reinforcing splicing devices, or otherwise repair damaged reinforcing bars as directed by Engineer without additional compensation. Do not bend reinforcement after it is embedded in concrete unless indicated.

H. Chairs, Bolsters, Bar Supports, and Spacers:

    1. Size and Shape: To support reinforcement and prevent displacement of reinforcing during concrete placement conditions.

2. Use precast concrete blocks where reinforcing steel is to be supported over soil.
3. Use plastic protected bar supports or steel supports with plastic tips where reinforcing steel is to be supported on forms for a concrete surface that will be exposed to weather, high humidity, or liquid (including bottom of slabs over liquid containing areas). Use stainless-steel supports or plastic tipped metal supports in all other locations unless otherwise noted on Drawings or specified herein.
4. Provide #5 minimum size support bars. Do not reposition upper bars in a bar mat for use as support bars.
5. Alternate methods of supporting top steel in slabs, such as steel channels supported on the bottom steel or vertical reinforcing steel fastened to the bottom and top mats, may be used if approved by Engineer.

I. Spacing:

1. Space reinforcement bars with minimum clear spacing according to ACI 318 and ACI 350.
2. If bars are indicated in multiple layers, place upper bars directly above lower bars.

J. Determine clear concrete cover based on exposure to the environment. Provide the following clear concrete cover over reinforcement, unless indicated otherwise:

1. Concrete cast against and permanently exposed to earth: 3 inches.
2. Concrete exposed to soil, water, sewage, sludge and/or weather:

   a. Slabs (top and bottom cover), walls: 2 inches.
   b. Beams and columns (ties, spirals, and stirrups): 2 inches.

3. Concrete not exposed to soil, water, sewage, sludge and/or weather:

   a. Slabs (top and bottom cover), walls, joists, shells, and folded plate members: 1 inch.
   b. Beams and columns (ties, spirals, and stirrups): 1-1/2 inches.

K. Splicing:

1. Tension Members: Avoid splicing of reinforcing steel in concrete elements indicated as "tension members." However, if splices are required for constructability, splices in the reinforcement subject to direct tension shall be butted and joined with complete penetration welds to develop, in tension, at least 125 percent of the specified yield strength of the bar. Offset splices in adjacent bars the distance of a Class B splice or 30 inches, whichever is greater.
2. Welded Wire Fabric: Provide lap splices in accordance with the requirements of ACI 318 but not less than 12 inches. Tie the spliced fabrics together with wire ties spaced not more than 24 inches on center and lace with wire of the same diameter as the welded wire fabric. Offset splices in adjacent widths to prevent continuous splices.
3. Reinforcing Splicing Devices: Use only where indicated. Offset splices in adjacent bars by at least 30 bar diameters. Use only for special splice and dowel conditions indicated or approved by Engineer.
4. Locate reinforcement splices at point of minimum stress, unless indicated otherwise.
5. Obtain approval of splice locations from Engineer.

3.2 TOLERANCES

A. Install reinforcement within following tolerances for slabs, beams, girders, walls, and foundation elements:

1. Member Depth (or Thickness) Greater Than 12 Inches:

   a. Reinforcement Location: Plus or Minus 1/2 inch.
   b. Concrete Cover: Plus or Minus 1/2 inch.

2. Member Depth (or Thickness) Less Than or Equal to 12 Inches:

   a. Reinforcement Location: Plus or Minus 3/8 inch.
   b. Concrete Cover: Plus or Minus 3/8 inch.

3.3 FIELD QUALITY CONTROL

A. Inspection by Engineer: When reinforcing is complete and ready for inspection, notify Engineer at least six working hours prior to proposed concrete placement.

B. Do not cover reinforcing steel with concrete until reinforcement, including the size, spacing and position has been inspected by Engineer and Engineer's release to proceed with concreting has been obtained. Keep forms open until Engineer has completed inspection of the reinforcement.

END OF SECTION 032000

© 2023 CDM Smith
All Rights Reserved

This page intentionally left blank.

© 2023 CDM Smith
All Rights Reserved

SECTION 033000 - CAST-IN-PLACE CONCRETE

PART 1 - GENERAL

1.1 RELATED DOCUMENTS

A. Drawings and general provisions of the Contract, including General and Supplementary Conditions and Division 01 Specification Sections, apply to this Section.

1.2 SUMMARY

A. Section Includes: Cast-in-Place Concrete for various items indicated in Contract Documents.

B. Field sampling, testing, inspection, and related laboratory tests will be provided by Owner. Contractor is responsible to request the required field sampling, testing, inspection, and related laboratory tests.

C. Related Requirements:
1. List other Sections directly related to or affecting Work of this Section. Include Sections specifying information expected to be found in this Section as well as Sections required to describe complete system or assembly requirements.
2. Section 031000 “Concrete Forming and Accessories”: Formwork and accessories.
3. Section 032000 “Concrete Reinforcing”: Requirements for reinforcing steel and supports.
4. Section 032500 “Concrete Joint and Joint Accessories”.
5. Section 033500 “Concrete Finishing”: Finishing of concrete floor and wall surfaces.
6. Section 033900 “Concrete Curing”: Curing of concrete surfaces.
7. Section 071113 “Bituminous Dampproofing” for dampproofing the exterior of subgrade concrete walls.
8. Section 099676.13 “Wastewater Collection System Coatings”: High-performance concrete interior coating systems and requirements.
9. Various Sections in Divisions 21 through 23: Mechanical items for casting into concrete.
10. Various Sections in Divisions 26 through 28: Electrical items for casting into concrete.

1.3 COORDINATION

A. Coordinate placement of joint devices with erection of concrete formwork and placement of form accessories.

1.4 ACTION SUBMITTALS

A. Submit, in accordance with Section 013300, product data for:

1. Sources of cement, fly ash or ground granulated blast furnace slag, aggregates, and batched concrete. Indicate name and address of mill, quarry, or plant.

2. Air entrainment admixture. Product data including catalogue cut, technical data, storage requirements, product life, recommended dosage, temperature considerations and conformity to ASTM standards.
3. Water reducing admixture. Product data including catalogue cut, technical data, storage requirements, product life, recommended dosage, temperature considerations and conformity to ASTM standards.
4. Cold weather and hot weather concreting plans demonstrating how concrete will meet the requirements of this Section including but not limited to concrete mixes, placement, curing and protection.

B. Concrete Mixes: For each formulation of concrete proposed for use, submit constituent quantities per cubic yard, water cementitious ratio, air content, concrete slump, type and manufacturer of cement and type and manufacturer of fly ash or ground granulated blast furnace slag. Provide either subparagraph 1. or 2., below, for each mix proposed.

1. Standard deviation data for each proposed concrete mix based on statistical records. Provide the following for each strength data point used in the calculation of the standard deviation for determination of the minimum required average strength:

   a. Date of sampling and name of testing laboratory.
   b. Name of concrete batch plant.
   c. Water cementitious ratio.
   d. Slump of batch.
   e. Air content of batch.
   f. Compressive strengths of all cylinders tested at that age in that batch.
   g. If available, temperature and unit weight of batch.
   h. Provide data from projects not more strictly controlled than outlined in these specifications. Provide summary sheet showing all pertinent data and the computation of the standard deviation.

2. Water cementitious ratio curve for concrete mixes based on laboratory tests. Provide average cylinder strength test results at 7, 14, and 28 days for laboratory concrete mix designs.

C. Concrete Mixes: Shrinkage test results.

D. Samples: Fine and coarse aggregates, if requested for examination by Engineer.

1.5 INFORMATIONAL SUBMITTALS

A. Test Reports:

1. Aggregates: Conformance to ASTM standards, including sieve analysis, mechanical properties, deleterious substance content, and mortar bar expansion test results.
2. Cement and fly ash or ground granulated blast furnace slag: Conformance to ASTM standards, including chemical analysis and physical tests.

B. Certifications:

1. Certify that admixtures used in the same concrete mix are compatible with each other and the aggregates.
2. Certify that Contractor is not associated with independent testing laboratory proposed for use by Contractor nor does Contractor or its officers have a beneficial interest in the laboratory.
3. Certificate of conformance for concrete production facilities from the NRMCA.

1.6 CLOSEOUT SUBMITTALS

A. Project Record Documents: Record actual locations of embedded utilities and components concealed from view in finished construction.

1.7 QUALITY ASSURANCE

A. Comply with ACI 318 and ACI 350 and other stated specifications, codes and standards. Apply the most stringent requirements of other stated specifications, codes, standards, and this Section when conflicts exist.

B. Provide concrete uniform in color and appearance.

C. Preconstruction Meeting: At least 10 working days before first concrete placement 7 days before the formwork installation, whichever is sooner, hold a meeting to review formwork installation, concrete placement requirements, waterstop placement, jointing, concrete curing, hot and cold weather concreting, and finishing. Notify all parties involved, including Engineer, of the meeting at least 10 working days prior to its scheduled date. Prepare an agenda for the meeting. Take meeting minutes and distribute to meeting attendees.

D. If during work progress, it is impossible to secure concrete of the specified workability and strength with the materials being furnished, Engineer may order such changes in proportions or materials, or both, as may be necessary to secure the specified properties. Make ordered changes without additional compensation.

E. If during work progress, materials from the sources originally accepted change in characteristics, make new acceptance tests of materials and establish new concrete mixes with assistance of an independent testing laboratory, without additional compensation.

F. Field testing, inspection services, and related laboratory tests will be provided by Owner. Methods of testing will comply with latest applicable ASTM methods. The following items will be tested by Owner to verify conformity with this Section:

1. Concrete Placements: Compressive strength (cylinders), temperature, slump, and air content.
2. Other materials that may require field testing.

G. Concrete Placement: Compressive strength (cylinders), temperature, slump, and air content.

H. Samples of constituents and as-placed concrete will be subjected to laboratory tests by Owner. Materials incorporated in the work shall conform to accepted samples.

I. Perform Work according to ACI 301, ACI 318, and ACI 350.

J. Comply with ACI 305R when placing concrete during hot weather.

K. Comply with ACI 306R when placing concrete during cold weather.

L. Acquire cement and aggregate from one source for Work.

M. Maintain one copy of each standard affecting Work of this Section on Site.

1.8 AMBIENT CONDITIONS

A. Section 015000 "Temporary Facilities and Controls": Requirements for ambient condition control facilities for product storage and installation.

B. Maintain concrete temperature after installation at minimum 50 degrees F for minimum seven days.

PART 2 - PRODUCTS

2.1 MATERIALS

A. Materials shall comply with this Section and any applicable State or local requirements.

B. Cement: Domestic portland cement conforming to ASTM C150. Do not use air entraining cements. Do not use cement produced by a manufacturer that uses hazardous waste derived fuel as an energy source for its kilns. Cement brand must be approved by Engineer and one brand shall be used throughout the work.

1. Comply with ASTM C150, Type II - Moderate Sulfate Resistant.
2. Type: Portland.
3. Blended Cement:

   a. Comply with ASTM C595.
   b. Type: IL (MS-Moderate Sulfate Resistance).

C. Aggregates:

1. Fine Aggregate: Washed inert natural sand conforming to ASTM C33.
2. Coarse Aggregate: Well-graded crushed stone or washed gravel conforming to ASTM C33. Grading requirements are listed in ASTM C33, Table 3 for the specified coarse aggregate size number listed in Table 1. Limits of deleterious substances and physical property requirements are listed in ASTM C33, Table 4 for severe weathering regions. Do not use coarse aggregates known to be deleteriously reactive with alkalis in cement.
3. Fine and coarse aggregates used shall not cause expansion of mortar bars greater than 0.1 percent in 16 days when tested in accordance with ASTM C1260 and using project

proposed cement. If aggregates proposed do not meet this requirement, then satisfy either subparagraph a. or b. below.

a. Total equivalent alkali content of the cement: Do not exceed 0.60 percent as provided in the Optional Chemical Requirements of ASTM C150.
b. Fine and coarse aggregates used shall not cause expansion of mortar bars greater than 0.1 percent in 16 days when tested in accordance with ASTM C1260 and using the cement and fly ash or ground granulated blast furnace slag proposed for the project. Proportions of cement-fly ash mix or cement-ground granulated blast furnace slag mix shall be the same as those proposed for the project.

D. Water:

1. Comply with ACI 318 and ACI 350.
2. Potable, without deleterious amounts of chloride ions.

E. Admixtures: Use admixtures free of chlorides and alkalis, except for those attributable to drinking water. Provide admixtures from same manufacturer when it is required to use more than one admixture in the same concrete mix. Use admixtures compatible with concrete mix including other admixtures. Do not use admixtures causing retarded or accelerated setting of concrete without written approval from Engineer. Use retarding or accelerating water reducing admixtures when so approved.

1. Air Entrainment: Comply with ASTM C260.
2. Chemical:

a. Comply with ASTM C494.
b. Type A - Water Reducing.

3. Plasticizing:

a. Comply with ASTM C1017.
b. Type I, plasticizing.

F. Supplementary Cementitious Materials:

1. Fly Ash: Class F fly ash complying with ASTM C618, including the requirements of Table 1 but with the Loss on Ignition (LOI) limited to 3 percent maximum and the optional physical requirements of Table 3. Test in compliance with ASTM C311 with a minimum of one sample weighing four pounds taken from each 200 tons of fly ash supplied for the project.
2. Ground Granulated Blast Furnace Slag: Grade 100 or Grade 120 ground granulated blast furnace slag complying with ASTM C989. Provide ground granulated blast furnace slag from a single source and uniform in color. Mill test reports submitted must be within 6 months of submittal date.
3. Silica Fume: Comply with ASTM C1240.

2.2 CONCRETE MIX

A. Engage an independent testing laboratory to establish concrete mixes and perform sampling and laboratory testing of products and materials.

B. Select proportions of ingredients to meet the design strength and materials limits specified in Table 1 and to produce placeable, durable concrete conforming to these specifications. Proportion ingredients to produce a homogenous mixture which will readily work into corners and angles of forms and around reinforcement without permitting materials to segregate or allowing free water to collect on the surface.

C. Base concrete mixes on standard deviation data of prior mixes with essentially the same proportions of the same constituents or, if not available, develop concrete mixes by laboratory tests using the materials proposed for the work.

1. For concrete mixes based on standard deviation data of prior mixes, submit standard deviation data of prior mixes with essentially the same proportions of the same constituents in accordance with ACI 318 and ACI 350 and based on the modification factors for standard deviation tests contained in ACI 318 and ACI 350.
2. For concrete mixes developed by laboratory testing, base cementitious content of the concrete on curves showing the relation between water cementitious ratio and 7, 14 and 28-day compressive strengths of concrete made using the proposed materials. Determine curves by four or more points, each representing an average value of at least three test specimens and one water-cementitious ratio at each age. Provide curves with a range of values sufficient to yield the desired data, including the compressive strengths specified, without extrapolation. Cementitious content of the concrete mixes to be used, as determined from the curve, shall correspond to the required average compressive strength in Table 5.3.2.2 of ACI 318. Resulting mix shall not conflict with the limiting values for maximum water cementitious ratio and net minimum cementitious content specified in Table 1.

D. Test fly ash or ground granulated blast furnace slag and concrete mixture to provide test data confirming that materials in combination with the cement meet strength requirements and are compatible with other concrete additives.

E. Test aggregates for potential alkali reactivity in accordance with ASTM C1260. If initial testing indicates aggregates are not potentially reactive repeat test at 3 month intervals.

F. Compression Tests: Provide testing of the proposed concrete mixes to demonstrate compliance with compression strength requirements in conformity with the provisions of ACI 318.

G. Entrained Air: Measure by ASTM C231 as shown in Table 1.

1. If proposed air entrainment admixture requires testing methods other than ASTM C231 to accurately determine air content, make special note of this requirement in admixture submittal.

H. Concrete Slump: Measure by ASTM C143 as shown in Table 1.

I. Proportion admixtures according to the manufacturer's recommendations. Two or more admixtures specified may be used in the same mix provided that the admixtures in combination

retain full efficiency and have no deleterious effect on the concrete or on the properties of the other admixture(s).

TABLE 1

Class	Design Strength 1	Cement 2	Fine Aggregate 3	Coarse Aggregate 3	Cementitious Content 4
A	2,500	Type II	Sand	57 (9)	440
B	3,000	Type II	Sand	57	480
E1	4,500	Type II	Sand	467	560
E2	4,500	Type II	Sand	57	580
E3	4,500	Type II	Sand	67	610

Class	W/C Ratio 5	SCM 6	AE Range 7	WR 8	HRWR 10	Slump Range Inches
A	0.62 max.	Yes	3.5 to 5	Yes	No	1-4
B	0.54 max.	Yes	3.5 to 5	Yes	No	1-3
E1	0.42 max.	Yes	3.5 to 5	Yes	No	3-5
E2	0.42 max.	Yes	3.5 to 5	Yes	No	3-5
E3	0.42 max.	Yes	3.5 to 5	Yes	No	3-5

TABLE NOTES:

1. Minimum compressive strength in psi at 28 days.
2. ASTM designation in ASTM C150.
3. Size Number in ASTM C33.
4. Minimum cementitious content in pounds per cubic yard where fly ash or ground granulated blast furnace slag is used cementitious content is defined as cement content plus fly ash or ground granulated blast furnace slag content.
5. W/C is Maximum Water Cementitious ratio by weight.
6. Supplementary Cementitious Material (SCM) fly ash content in the range of 20 - 25 percent of the total cement content plus fly ash content, by weight. If ground granulated blast furnace slag is used in lieu of fly ash, the content of ground granulated blast furnace slag shall be in the range of 25 - 45 percent of the total cement plus ground granulated blast furnace slag content, by weight.
7. AE is percent air entrainment.
8. WR is water reducing admixture.
9. Except as specified in Section 260543 for concrete electrical raceway encasement.
10. HRWR is high-range water-reducing admixture.

J. Shrinkage Tests: Perform shrinkage tests on the design mix for Class E1 and Class E2 concrete. The tests shall conform to ASTM C157 as modified by ASTM C596 for curing, storage, and comparator readings. Use concrete specimens. Do not use mortar specimens.

1. Average Shrinkage: At 25 days of air storage do not exceed 0.036 percent.

2. Make tests with at least three different brands of cement. Only brands demonstrating a shrinkage value within 10 percent of the brand with the lowest shrinkage value at 25 days of air storage will be acceptable.

K. Admixtures:

1. Include admixture types approved by Engineer and their quantities in concrete mix designs.
2. Cold Weather:

   a. ASTM C494 Type E admixture may be used in cold weather, if approved by Engineer.
   b. Use of admixtures will not relax cold-weather placement requirements.

3. Hot Weather:

   a. ASTM C494 Type D admixture may be used in hot weather, if approved by Engineer.
   b. Use of admixtures will not relax hot-weather placement requirements.

4. Do not use calcium chloride or admixtures containing calcium chloride.
5. Add air entrainment admixture to all concrete.
6. Add water reducing admixture to all concrete.

L. Ready-Mixed Concrete: Mix and deliver concrete according to ASTM C94.

2.3 ACCESSORIES

A. Concrete Reinforcing Fibers:

1. Synthetic reinforcing fibers for concrete grout shall be 100 percent polypropylene collated, fibrillated fibers, Fibermesh 300 as manufactured by Sika Fibers LLC, Chattanooga, TN, or equal. Fiber length and quantity for the concrete grout mix shall be in strict compliance with the manufacturer's recommendations as approved by Engineer.

PART 3 - EXECUTION

3.1 MEASURING MATERIALS

A. Provide concrete composed of portland cement, fly ash or ground granulated blast furnace slag, fine aggregate, coarse aggregate, water, and admixtures as specified and produced by a plant complying with ACI 318 and ASTM C94. Batch all constituents, including admixtures, at the plant.

B. Measure materials for batching concrete by weighing in conformity with and within tolerances given in ASTM C94 except as otherwise specified. Use scales last certified by the local Sealer of Weights and Measures within one year of use.

C. Weigh cement and fly ash or ground granulated blast furnace slag in individual weigh batchers that are separate and distinct from weigh batchers used for other materials. When cement and fly ash or ground granulated blast furnace slag are weighed in a cumulative weigh batcher, the cement shall be weighed first.

D. Measure the amount of free water in fine aggregates within 0.5 percent with a moisture meter. Compensate for varying moisture contents of fine aggregates. Record number of gallons of water as-batched on printed batch tickets.

E. Dispense admixtures either manually using calibrated containers or measuring tanks or by means of an automatic dispenser approved by the manufacturer of the specific admixture.

1. Charge air entrainment and chemical admixtures into the mixer as a solution using an automatic dispenser or similar metering device.
2. Inject multiple admixtures separately during the batching sequence.

3.2 MIXING AND TRANSPORTING

A. Provide ready-mixed concrete produced by equipment complying with ACI 318 and ASTM C94 and produced by a plant certified by the NRMCA. Do not hand-mix. Use truck mixers carrying a rating plate conforming to TMMB 100. Clean each transit mix truck drum and reverse drum rotation before truck proceeds under the batching plant. Equip each transit-mix truck with a continuous, nonreversible, revolution counter showing the number of revolutions at mixing speeds.

B. Transport ready-mix concrete to the site in watertight agitator or mixer trucks loaded not in excess of their rated capacities as stated on the name plate.

C. Keep water tank valve on each transit truck locked at all times. Any addition of water must be directed by Engineer. Incorporate water directed to be added by additional mixing of at least 50 revolutions at mixing speed after the addition of all water. Meter all added water and show the amount of water added on each delivery ticket.

D. Comply with ACI 318 and ASTM C94 for central plant and rolling stock equipment and methods.

E. Select equipment of size and design to provide continuous flow of concrete at the delivery end. Use metal or metal-lined non-aluminum discharge chutes with slopes not exceeding one vertical to two horizontal and not less than one vertical to three horizontal. Chutes more than 20 feet long and chutes not meeting slope requirements may be used if concrete is discharged into a hopper before distribution.

F. Do not retemper (mix with or without additional cement, aggregate, or water) concrete or mortar which has partially hardened.

G. Handle concrete from mixer to placement providing concrete of specified quality in the placement area and not exceeding the maximum time interval specified in Paragraph 3.2 I.4. Dispatch trucks from the batching plant so they arrive at the work site just before the concrete is required to avoid excessive mixing of concrete while waiting or delays in placing successive layers of concrete in the forms. Remix for a minimum of 5 minutes prior to discharge or testing.

H. Furnish a delivery ticket for ready mixed concrete to Engineer as each truck arrives. Provide a printed record of the weight of cement and each aggregate as batched individually on each ticket. Use the type of indicator that returns for zero punch or returns to zero after a batch is discharged. Indicate for each batch the weight of fine and coarse aggregate, cement, fly ash or ground granulated blast furnace slag, and water, moisture content of fine and coarse aggregate at time of batching, and types, brand and quantity of each admixture, the quantity of concrete delivered, the time any water is added and the amount, and the numerical sequence of the delivery. Show the time of day batched and time of discharge from the truck. Indicate the number of revolutions of transit mix truck.

I. Temperature and Mixing Time Control:

1. In cold weather (see Paragraph 3.8, C) maintain the as-mixed temperature of the concrete and concrete temperatures at the time of placement in the forms as indicated in Table 3.
2. If water or aggregate has been heated, combine water with aggregate in the mixer before cement is added. Do not add cement to mixtures of water and aggregate when the temperature of the mixture is greater than 90 degrees F.
3. In hot weather (see Paragraph 3.8, D), cool ingredients before mixing to maintain temperature of the concrete below the maximum placing temperature of 90 degrees F. Well-crushed ice may be substituted for all or part of the mixing water.
4. Maximum time interval between the addition of mixing water and/or cement to the batch and the final placing of concrete in the forms shall not exceed the values shown in the following Table 2:

TABLE 2

AIR OR CONCRETE TEMPERATURE (WHICHEVER IS HIGHER)	MAXIMUM TIME
80 Degree F to 90 Degree F	45 minutes
70 Degree F to 79 Degree F	60 minutes
40 Degree F to 69 Degree F	90 minutes

3.3 EXAMINATION

A. Verify requirements for concrete cover over reinforcement.

B. Verify that anchors, seats, plates, reinforcement, piping, electrical conduits and other items to be cast into concrete are accurately placed, positioned securely, and will not interfere with placing concrete.

C. At all times batch, mix, transport, place, and cure concrete to the inspection of Engineer. Advise Engineer of readiness to proceed at least 24 hours prior to each concrete placement. Engineer will inspect the preparations for concreting, including preparation of previously placed concrete, reinforcing and alignment, cleanliness, and tightness of formwork. Do not place concrete without the inspection and acceptance of Engineer.

3.4 EMBEDDED ITEMS

A. Secure to forms as required or set for embedment as required, miscellaneous metal items, sleeves, reglets, anchor bolts, anchors, inserts, and other items furnished under other Sections and required to be embedded into concrete. Set and secure such items in the locations and alignments needed so they are not displaced by concrete placement.

B. Clean embedded items free of rust, mud, dirt, grease, oil, ice, or other contaminants which would reduce or prevent bonding with concrete.

C. Coat or isolate all aluminum embedments to prevent aluminum-concrete reaction or electrolytic action between aluminum and steel.

D. Do not embed piping in concrete unless indicated on Drawings.

E. Do not embed electrical conduits in concrete unless indicated on Drawings.

F. Fabricate piping and conduit such that cutting, bending, or relocation of reinforcing steel is not required. Satisfy the following for pipes and conduits embedded within a slab or wall (other than those merely passing through), unless otherwise indicated on Drawings or approved:

1. Maximum outside dimension of pipe or conduit: Be not greater than one third the overall thickness of slab or wall.
2. Spacing of pipes or conduits: Be greater than or equal to three diameters or widths on center.

G. Close open ends of piping, conduits, and sleeves embedded in concrete with caps or plugs prior to placing concrete.

H. Ensure specified tests and inspections on embedded piping are completed and satisfactory before starting concrete placement. Ensure mechanical or electrical tests and inspections are completed and satisfactory prior to starting concrete placement. Do not place concrete until unsatisfactory items and conditions have been corrected.

I. Position embedded anchor bolts using templates.

J. Correct embedded items not installed in the location or alignment needed or displaced by concrete placement without additional compensation.

3.5 PREPARATION

A. Previously Placed Concrete:

1. Prepare joints as specified in Section 031500 “Concrete Joints and Accessories”.

B. Remove debris and ice from formwork, reinforcement, and concrete substrates.

C. Remove water from areas receiving concrete before concrete is placed.

3.6 CONCRETE APPEARANCE

A. Remix concrete showing either poor cohesion or poor coating of the coarse aggregate with paste. Reject remixed concrete showing either poor cohesion or poor coating of the coarse aggregate with paste. Make, at no additional cost to Owner, changes in the concrete mix design for future deliveries only by adjusting one or more of the following if the slump is within the allowable limit, but excessive bleeding, poor workability, or poor finish ability are observed:

1. Gradation of aggregate.
2. Proportion of fine and coarse aggregate.
3. Percentage of entrained air, within the allowable limits.

B. Provide concrete having a homogeneous structure which, when hardened, will have the specified strength, durability, and appearance. Provide mixtures and workmanship such that concrete surfaces, when exposed, will require no finishing except as specified in Section 033500.

3.7 INSTALLATION

A. Placing Concrete:

1. Place concrete according to ACI 301, ACI 318, and ACI 350.
2. Notify testing laboratory and Engineer minimum 24 hours prior to commencement of operations.
3. Ensure that reinforcement, inserts, embedded parts, formed expansion and contraction joints are not disturbed during concrete placement.
4. Verify that formwork completely encloses concrete to be placed and is securely braced prior to concrete placement. Remove ice, standing water, dirt, debris, and other foreign materials from forms and exposed joint surfaces. Confirm that reinforcement and other embedded items are securely in place. Have a worker at the location of the placement who can check that reinforcement and embedded items remain in designated locations and alignments while concrete is being placed. Sprinkle semi-porous subgrades or forms to eliminate suction of water from the mix. Do not place concrete on frozen subgrade, snow, or ice.
5. Deposit concrete as near its final position as possible to prevent segregation due to rehandling or flowing. Place concrete continuously at a rate that allows the concrete previously placed to be integrated with fresh plastic concrete. Do not deposit concrete which has partially hardened or has been contaminated by foreign materials or on concrete which has hardened sufficiently to cause formation of seams or planes of weakness within the section. If the section cannot be placed continuously, place construction joints as specified or as approved.
6. Pumping of concrete will be permitted. Use a mix design and aggregate sizes chosen for pumping and submit for approval. Do not use pipelines made of aluminum or aluminum alloy. When concrete is pumped, determine slump at point of truck discharge and determine air content at point of placement.
7. Remove temporary spreaders from forms when the spreader is no longer needed. Temporary spreaders may remain embedded in concrete only when made of galvanized steel or concrete and if prior approval has been obtained.
8. Do not place concrete for supported elements until concrete previously placed in the supporting element has attained design strength.

9. Where surface mortar is to form the base of a finish, especially surfaces designated to be painted, work coarse aggregate back from forms to bring the full surface of the mortar against the form. Prevent the formation of surface voids.
10. Slabs:

    a. After bulkheads, screeds and jointing materials have been positioned, place concrete continuously between joints beginning at a bulkhead, edgeform, or corner. Place each batch into the edge of the previously placed concrete to avoid stone pockets and segregation.
    b. Avoid delays in placement. If there is a delay in placement, spade and consolidate concrete placed after the delay at the edge of previously placed concrete to avoid cold joints. Bring concrete to correct level and strike off with a straightedge. Use bullfloats or darbies to smooth the surface, leaving it free of humps or hollows.
    c. Where slabs are to be placed integrally with the walls below them, place the walls and compact as specified. Allow one hour to pass between placement of the wall and the overlying slab to permit consolidation of the wall concrete. Keep top surface of the wall moist to prevent cold joints.

11. Formed Concrete:

    a. Place concrete in forms using tremie tubes taking care to prevent segregation. Maintain bottom of tremie tubes near the surface of concrete already placed. Do not permit concrete to drop freely more than 4 feet. Place concrete for walls in 12 inch to 24 inch lifts, keeping the surface horizontal. If a high-range water-reducing admixture is used do not permit concrete to drop freely more than 15 feet; maximum lift thickness not to exceed 7 feet.

12. Bollards: Conform to requirements specified above for formed concrete and completely fill pipe with concrete as indicated.
13. Maintain records of concrete placement, including date, location, quantity, air temperature, and test samples taken.
14. Place floor slabs in indicated saw-cut pattern.

B. Compacting:

1. Consolidate concrete by vibration and puddling, spading, rodding, or forking so that concrete is completely worked around reinforcement, embedded items, and openings and into corners of forms. Continuously perform puddling, spading, rodding, and forking along with vibration of the placement to eliminate air or stone pockets which may cause honeycombing, pitting, or planes of weakness.
2. Compact concrete with mechanical vibrators. Do not order concrete until vibrators (including standby units in working order) are on the job.
3. Use mechanical vibrators having a minimum frequency of 8,000 vibrations per minute. Insert vibrators and withdraw at points from 18 inches to 30 inches apart. Vibrate sufficiently at each insertion to consolidate concrete, generally from 5 to 15 seconds. Do not over vibrate so as to segregate. Keep standby vibrators on the site during concrete placing operations.
4. Concrete Slabs: Vibrate concrete slabs less than 8 inch thick by vibrating screeds. Vibrate concrete slabs 8 inches and thicker by internal vibrators and (optionally) with vibrating screeds. Place vibrators into concrete vertically. Do not lay vibrators horizontally or lay over.

5. Walls and Columns: Use internal vibrators rather than form vibrators, unless otherwise approved by Engineer. General: for each vibrator needed to level the batch at the point of discharge, use one or more additional vibrators to densify, homogenize, and perfect the surface. Insert vibrators vertically at regular intervals, through fresh concrete and slightly into the previous lift, if any.
6. Amount of Vibration: Use vibrators to consolidate properly placed concrete. Do not use vibrators to move or transport concrete in the forms. Continue vibration until:

    a. Frequency of vibrator returns to normal.
    b. Surface appears liquefied, flattened and glistening.
    c. Trapped air ceases to rise.
    d. Coarse aggregate has blended into surface, but has not disappeared.

3.8 PROTECTION

A. Protect all concrete work against injury from the elements and defacements of any nature during construction operations.

B. Protect finished surfaces and slabs whenever ambient conditions of humidity, temperature, sunlight, and wind may result in the rapid evaporation of water from the concrete, to prevent checking and crazing, until the beginning of curing.

C. Cold Weather Concreting:

1. For this Specification, 'cold weather' is defined as a period when for more than three successive days, the average daily outdoor temperature drops below 40 degrees F. Calculate average daily temperature as the average of highest and lowest temperature during the period from midnight to midnight.
2. Batch, deliver, place, cure, and protect concrete during cold weather in compliance with the recommendations of ACI 306R and the additional requirements of this Section.
3. Review cold weather concreting plan at preconstruction meeting. Include methods and procedures for use during cold weather including the production, transportation, placement, protection, curing, and temperature monitoring of concrete and procedures to be implemented upon abrupt changes in weather conditions or equipment failures.
4. Maintain minimum temperature of concrete immediately after placement and during the protection period as indicated in Table 3. The temperature of the concrete in place and during the protection period shall not exceed these values by more than 20 degrees F. Prevent overheating and non-uniform heating of the concrete.

TABLE 3

Minimum Concrete
Temperatures For
Section Dimensions

	< 12 inches	12 - 36 inches
Minimum Concrete Temperature:	55 degrees F	50 degrees F

5. Protect concrete during periods of cold weather to provide continuous warm, moist curing (with supplementary heat when required by weather conditions) for a total of at least 350 degree-days of curing.

a. Degree-days are defined as the total number of 24 hour periods multiplied by the weighted average daily air temperature at the surface of the concrete, where 7 days at an average 50 degrees F equals 350 degree-days.
b. To calculate the weighted average daily air temperature, sum hourly measurements of air temperature in the shade at concrete surface taking any measurement less than 50 degrees F as 0 degrees F. Divide the sum thus calculated by 24 to obtain the weighted average temperature for that day.

6. Do not use salt, manure, or other chemicals for protection.
7. At the end of the protection period, allow the concrete to cool gradually to the ambient temperature. If water curing has been used, do not expose concrete to temperatures below those shown in Table 3 until at least 24 hours after water curing has been terminated and air-dry concrete for at least 3 days prior to first exposure to freezing temperatures.
8. During periods not defined as cold weather, but when freezing temperatures are expected or occur, protect concrete surfaces from freezing for the first 24 hours after placing.

D. Hot Weather Concreting:

1. For this Specification, 'hot weather' is defined as any combination of high air temperatures, low relative humidity, and wind velocity which produces a rate of evaporation as estimated in ACI 305R, approaching or exceeding 0.2 pounds per square foot per hour.
2. Batch, deliver, place, cure, and protect concrete during hot weather in compliance with the recommendations of ACI 305R and the additional requirements of this Section.

a. Temperature of concrete being placed shall not exceed 90 degrees F. Maintain a uniform concrete mix temperature below this level. The temperature of the concrete shall not cause loss of slump, flash set or cold joints.
b. Promptly deliver concrete to the site and promptly place the concrete upon its arrival at the site, not exceeding the maximum time interval specified in Paragraph 3.2 I.4. Provide vibration immediately after placement.
c. Engineer may direct Contractor to immediately cover concrete with sheet curing material.

3. Review hot weather concreting plan at preconstruction meeting. Include methods and procedures for use during hot weather, including production, placement, and curing.

3.9 REMOVAL OF FORMS

A. Do not remove forms before concrete has attained a strength of at least 70 percent of its specified design strength for beams and slabs and at least 30 percent of its specified design strength for walls and vertical surfaces, nor before reaching the following number of day-degrees of curing, whichever is longer.

TABLE 4

Forms for	Degree Days
Beams and slabs	500
Walls and vertical surfaces	100

(See definition of degree-days in Paragraph 3.8C).

B. Do not remove shores until concrete has attained at least 70 percent of its specified design strength and also sufficient strength to support safely its own weight and construction live loads.

C. In cold weather when temperature of concrete exceeds ambient air temperature by 20 degrees F at the end of the protection period, loosen forms and leave in place for at least 24 hours to allow concrete to cool gradually to ambient air temperature.

3.10 FIELD QUALITY CONTROL

A. Inspection and Testing: Performed by Owner's testing laboratory according to ACI 318 and ACI 350.

B. Provide unrestricted access to Work and cooperate with appointed testing and inspection firm.

C. Submit proposed mix design of each class of concrete to inspection and testing firm for review and approval prior to commencement of Work.

D. Concrete Inspections:

1. Continuous Placement Inspection: Inspect for proper installation procedures.
2. Periodic Curing Inspection: Inspect for specified curing temperature and procedures.

E. Strength Test Samples:

1. Sampling Procedures: Comply with ASTM C172.
2. Cylinder Molding and Curing Procedures:

   a. Comply with ASTM C31.
   b. Cylinder Specimens: Standard cured.

3. Sample concrete and make one set of five cylinders for every 75 cu. yd. or less of each class of concrete placed each day, and for every 5,000 sq. ft. of surface area for slabs and walls. Form specimens in 6 inch diameter by 12 inch long non-absorbent cylindrical molds.
4. If volume of concrete for a class of concrete would provide less than five sets of cylinders, take samples from five randomly selected batches, or from every batch, if less than five batches are used.
5. Make one additional cylinder during cold weather concreting and field cure.

F. Field Testing:

1. Slump Test Method: Comply with ASTM C143.
2. Air Content Test Method: Comply with ASTM C173.
3. Temperature Test Method: Comply with ASTM C1064.
4. Compressive Strength Concrete:

a. Measure slump and temperature for each sample. When concrete is pumped, slump will be determined at point of truck discharge. If the slump is outside the specified range, the concrete will be rejected.
b. Measure air content in air-entrained concrete for each sample. Air content for concrete made of ordinary aggregates having low absorption shall be made in compliance with either the pressure method complying with ASTM C231 or by the volumetric method complying with ASTM C173. If aggregates with high absorptions are used, use the latter test method. When concrete is pumped, air content will be determined at point of placement.

G. Cooperate in the making of tests by allowing free access to the work for the selection of samples. Provide four firmly braced, insulated, heated, closed wooden curing boxes, each sized to hold ten specimens, complete with cold weather temperature and hot weather temperature control thermostat for initial curing and storage from time of fabrication until shipment to Owner's testing lab. Protect the specimens against injury or loss through construction operations. Furnish material and labor required for purpose of taking concrete cylinder samples. Owner will pay for shipping of specimens.

H. Cylinder Compressive Strength Testing:

1. Test Method: Comply with ASTM C39.
2. Test Acceptance: According to ACI 318 and ACI 350.
3. Test one cylinder at 7 days.
4. Test one cylinder at 14 days.
5. Test two cylinders at 28 days.
6. Retain one cylinder for testing when requested by Engineer.
7. Dispose of remaining cylinders if testing is not required.
8. When the average 28 day compressive strength of the cylinders in any set falls below the required compressive strength or below proportional minimum seven-day or 14-day strengths (where proper relation between seven, 14 and 28 day strengths have been established by tests), change proportions, cementitious content, or temperature conditions to achieve the required strengths without additional compensation.

I. Core Compressive Strength Testing:

1. Engineer may have cores taken from any questionable area in the concrete work such as construction joints and other locations as required for determination of concrete quality. Use results of tests on such cores as basis for acceptance, rejection, or determining the continuation of concrete work. The right of Engineer to take such cores shall not be construed as creating any obligation to take such cores, and not exercising this right to do so shall not relieve Contractor from meeting specification requirements. Cooperate in obtaining cores by allowing free access to the work and permitting the use of ladders, scaffolding, and such incidental equipment as may be required. Repair core holes with non-shrink grout as specified in Section 036000 “Grouting”. Work of cutting, testing, and repairing the cores will be at the expense of Contractor if defective work is uncovered. If no defective work is found, such cost will be at the expense of Owner.
2. Sampling and Testing Procedures: Comply with ASTM C42.
3. Test Acceptance: According to ACI 318 and ACI 350.
4. Drill three cores for each failed strength test from failed concrete.

J. Patching:

1. Allow Engineer to inspect concrete surfaces immediately upon removal of forms.
2. It is the intent of these Specifications to require quality work including forming, mixing, and placement of concrete and curing so completed concrete surfaces will require no patching or repairs.
3. As soon as forms have been stripped and concrete surfaces exposed: remove fins and other projections; fill recesses left by the removal of form ties; and repair surface defects which do not impair structural strength. Clean exposed concrete surfaces and adjoining work stained by leakage of concrete.
4. Immediately after removal of forms, remove tie cones and metal portions of ties as specified in Section 031000 "Concrete Forming and Accessories". Fill holes promptly upon stripping as follows: Moisten the hole with water, followed by a 1/16 inch brush coat of neat cement slurry mixed to consistency of a heavy paste. Immediately plug hole with a 1 to 1.5 mixture of cement and concrete sand mixed slightly damp to the touch (just short of "balling"). Hammer grout into the hole until dense, and an excess of paste appears on the surface in the form of a spider web. Trowel smooth with heavy pressure. Avoid burnishing.
5. When filling tie cone holes and patching or repairing exposed surfaces use the same source of cement and sand as used in the parent concrete. Adjust color to match by addition of white cement. Rub lightly with a fine carborundum stone at an age of one to five days as necessary to bring surface down with parent concrete. Do not damage or stain virgin skin of surrounding parent concrete. Wash thoroughly to remove rubbed matter.
6. For very heavy (generally formed) patches, Engineer may order the addition of pea gravel to the mixture and the proportions modified as follows:

Material	Volumes	Weights
Cement	1.0	1.0
Sand	1.0	1.0
Pea Gravel	1.5	1.5

7. Patch imperfections according to ACI 318 and ACI 350.
8. Defective concrete and honeycombed areas: Chip down square and at least 1 inch 1-inch deep to sound concrete with hand chisels or pneumatic chipping hammers. Irregular voids or surface stones need not be removed if they are sound, free of laitance, and firmly embedded in the parent concrete. If honeycomb exists around reinforcement, chip to provide a clear space at least 3/8 inch wide around the steel. For areas less than 1-1/2 inches deep, the patch may be made in the same manner as described above for filling form tie holes, care being exercised to use adequately dry (non-trowelable) mixtures and to avoid sagging. Thicker repairs will require build-up in successive 1-1/2 inch layers on successive days, each layer being applied with slurry as described above.

K. Defective Concrete:

1. Description: Concrete not conforming to required lines, details, dimensions, tolerances, or specified requirements.
2. Repair or replacement of defective concrete will be determined by Engineer.
3. Do not patch, fill, touch up, repair, or replace exposed concrete except upon express direction of Engineer for each individual area.

3.11 FAILURE TO MEET REQUIREMENTS

A. Should the strengths shown by the test specimens made and tested in compliance with the previous provisions fall below the values given in Table 1, Engineer may require changes in proportions or materials, or both, to apply to the remainder of the work in accordance with Paragraph 1.8E. Furthermore, Engineer may require additional curing on those portions of the structure represented by the test specimens which fall below the values given in Table 1. The cost of such additional curing shall be at no additional cost to Owner. In the event that such additional curing does not give the strength required, as evidenced by core and/or load tests, Engineer may require strengthening or replacement of those portions of the structure which fail to develop the required strength. Coring and testing and/or load tests and any strengthening or concrete replacement required because strengths of test specimens are below that specified, without additional compensation. In such cases of failure to meet strength requirements, Contractor and Owner shall confer to determine what adjustment, if any, can be made in compliance with Sections titled "Strength" and "Failure to Meet Strength Requirements" of ASTM C94. The "purchaser" referred to in ASTM C94 is Contractor.

B. When the tests on control specimens of concrete fall below the required strength, Engineer will permit check tests for strengths to be made by means of typical cores drilled from the structure in compliance with ASTM C42 and C39. In cases where tests of cores fall below the values given in Table 1, Engineer, in addition to other recourses, may require load tests on any one of the slabs, walls, and beams in which such concrete was used. Test need not be made until concrete has aged 60 days. Engineer may require strengthening or replacement of those portions of the structure which fail to develop the required strength. Perform coring and testing, load tests, and any strengthening or concrete replacement required because strengths of test specimens are below that specified, without additional compensation.

C. Should the strength of test cylinders fall below 60 percent of required minimum 28 day strength, concrete shall be rejected, removed, and replaced without additional compensation.

3.12 SCHEDULE

A. Following Table 5 are general applications for various concrete classes and design strengths:

TABLE 5

Class	Design Strength (psi)	Description
A	2,500	Concrete fill, concrete fill for bollards, electrical raceway encasement and pipe encasement.
B	3,000	Civil site concrete (see ‘C’ drawings) and where specified.
E1	4,500	Structural concrete foundation mats and slabs, and walls, 16 inches and greater in thickness.

E2	4,500	Except as noted above for Class E1 concrete: Structural concrete greater than 10 inches in thickness including walls, slabs on grade, elevated slab and beam systems, grade beams, and all other structural concrete greater than 10 inches in thickness.
E3	4,500	Structural concrete 10 inches or less in thickness including walls, slabs on grade, elevated slab and beam systems, and all other structural concrete 10 inches or less in thickness.

END OF SECTION 033000

© 2023 CDM Smith
All Rights Reserved

SECTION 033500 - CONCRETE FINISHING

PART 1 - GENERAL

1.1 RELATED DOCUMENTS

A. Drawings and general provisions of the Contract, including General and Supplementary Conditions and Division 01 Specification Sections, apply to this Section.

1.2 SUMMARY

A. Section Includes:

1. Finishing of concrete.
2. Floor surface treatment.

B. Related Requirements:

1. Section 031000 “Concrete Forming and Accessories”: Cast-in-place concrete formwork, form ties and form release agent.
2. Section 031500 “Concrete Joints and Accessories”: Waterstops, premolded joint filler, sealant and neoprene bearing pads.
3. Section 033000 “Cast-in-Place Concrete”: Cast-in-place concrete.
4. Section 033900 “Concrete Curing”: Procedures for curing horizontal and vertical concrete surfaces.
5. Section 099676.13 “Wastewater Collection System Coatings” for high-performance interior concrete coatings.

1.3 COORDINATION

A. Coordinate Work of this Section with concrete placement and concrete curing.

1.4 ACTION SUBMITTALS

A. Product Data: Submit manufacturer information on concrete compatibilities, and limitations.

1.5 INFORMATIONAL SUBMITTALS

A. Manufacturer's Certificate: Certify that products meet or exceed specified requirements.

B. Field Quality-Control Submittals: Indicate results of Contractor-furnished tests and inspections.

C. Qualifications Statements:

1. Submit qualifications for manufacturer and applicator.
2. Submit manufacturer's approval of applicator.

1.6 CLOSEOUT SUBMITTALS

A. Operation and Maintenance Data: Submit information on maintenance renewal of applied coatings.

1.7 QUALITY ASSURANCE

A. Perform Work according to ACI 301 and 302.1.

B. Provide the services of a qualified field representative of the manufacturer of sealer or hardener to instruct the contractor on the proper application of the product under prevailing job conditions.

1.8 QUALIFICATIONS

A. Manufacturer: Company specializing in manufacturing products specified in this Section with minimum five years' experience.

B. Applicator: Company specializing in performing Work of this Section with minimum five years' experience and approved by manufacturer.

1.9 RESPONSIBILITY FOR CHANGING FINISHES

A. The surface finishes specified for concrete to receive coatings or other finish materials are those required for the proper application of the products specified under other Sections. Where products different from those specified are approved for use, determine if changes in finishes are required and provide the proper finishes to receive these products.

B. Perform changes in finishes made to accommodate products different from those specified at no additional compensation. Submit proposed new finishes to the Engineer for approval.

1.10 DELIVERY, STORAGE, AND HANDLING

A. Inspection: Accept materials on Site in manufacturer's original packaging and inspect for damage.

B. Store materials according to manufacturer instructions.

C. Protection:

1. Protect materials from moisture and dust by storing in clean, dry location remote from construction operations areas.

2. Provide additional protection according to manufacturer instructions.

1.11 AMBIENT CONDITIONS

A. Temporary Heat: Maintain minimum ambient temperature of 50 deg. F.

B. Ventilation: Sufficient to prevent injurious gases from temporary heat or other sources from affecting personnel or concrete.

PART 2 - PRODUCTS

PART 3 - EXECUTION

3.1 EXAMINATION

A. Verify that floor surfaces are acceptable to receive Work of this Section.

B. Proceed with installation only after unsatisfactory conditions have been corrected.

3.2 FORMED SURFACES

A. Form Removal: Conform to Sections 031000 and 033000.

B. Clean exposed concrete surfaces and adjoining work stained by leakage of concrete.

C. Off-Form Finish:

1. Remove fins and other projections and fill tie cones and defects as specified in Section 033000 “Cast-In-Place Concrete”.

D. Rubbed Finish:

1. Immediately upon stripping forms and before concrete changes color, carefully remove fins with a hammer. While surface is still damp apply a thin coat of medium consistency neat cement slurry using bristle brushes to provide a bonding coat within pits, air holes or blemishes in parent concrete. Do not coat large areas of the surface with this slurry.
2. Before slurry dries or changes color, apply a dry (almost crumbly) grout consisting of one volume cement to 1-1/2 volumes of clean masonry sand having a fineness modulus of approximately 2.25 and complying with gradation requirements of ASTM C144. Apply grout uniformly using damp (neither dripping wet nor dry) pads of coarse burlap approximately 6 inch square used as a float. Scrub grout into pits and air holes to provide a dense mortar in concrete imperfections to be patched.
3. Allow mortar to partially harden for one or two hours depending upon weather. If the air is hot and dry, keep surface damp during this period using a fine, fog spray. When grout has hardened sufficiently so it can be scraped from the surface with perpendicular edge of a steel trowel without damaging the grout in small pits or holes, cut off grout that can be

removed with a trowel. Grout allowed to remain on surface too long will get too hard and will be difficult to remove.

4. Allow the surface to dry and rub it vigorously with clean dry burlap to completely remove dried grout. No visible film of grout should remain after this rubbing. Entire cleaning operation for any area must be completed the day it is started. Do not leave grout on surfaces overnight. Allow grout to dry after it has been cut off with trowel so it can be wiped off clean with the burlap.
5. On the day following repair of pits, air holes, and blemishes, wipe surfaces clean with dry, used pieces of burlap containing old hardened mortar, which will act as a mild abrasive. After this treatment, there should be no built-up film remaining on the parent surface; if however a built-up film remains, use a fine abrasive stone to remove such material without breaking through original concrete surface film. Scrub lightly to remove excess material without working up a lather or mortar or changing concrete texture.
6. Follow final bagging or stoning operation with a thorough wash-down with stiff bristle brushes to remove extraneous materials from the surface. Spray surface with a fine fog spray periodically to maintain a continually damp condition for at least 3 days after repair grout application.
7. Rubbed Finish application may be deleted by the Engineer if unfinished concrete surface is of superior quality and without surface voids.

3.3 FLOORS AND SLABS

A. Consider the potential for longer setting time in concrete containing fly ash or ground granulated blast furnace slag.

B. Compact with internal vibrators as specified in Section 033000 “Cast-In-Place Concrete” and screed to established grades.

C. Following screeding as specified above, float slabs as approved by the Engineer. Continue floating operation until sufficient mortar is brought to surface to fill voids. Test surfaces with a straightedge to detect and eliminate high and low spots. Do not overwork concrete as evidenced by excess water and fine material on its surface.

D. Do not use "jitterbugs" or other special tools designed for the purpose of forcing the coarse aggregate away from the surface and allowing a layer of mortar to accumulate on any slab finish. Do not dust surfaces with dry materials. Round off edges of slabs and tops of walls with a steel edging tool. Use steel edging tool with radius of 1/4 inchfor slabs subject to wheeled traffic.

E. Measure floor flatness the day after a concrete floor is finished and before the shoring is removed, in order to eliminate any effects of shrinkage, curling, and deflection.

F. Finish Descriptions:

1. Steel Trowel Finish:

a. Finish by screeding and floating with straightedges to bring the surfaces to indicated elevations. While concrete is still green, but sufficiently hardened to bear a person's weight without deep imprint, wood float surface to a true and even plane with no coarse aggregate visible.

b. Apply sufficient pressure on wood floats to bring moisture to the surface. After surface moisture has disappeared, hand steel trowel to produce a smooth, impervious surface, free from trowel marks.
c. Trowel the surface again for the purpose of burnishing. Final troweling shall produce a ringing sound from the trowel.
d. Do not use dry cement or additional water in troweling.

2. Wood Float Finish:

a. Finish by screeding with straightedges to bring the surfaces to indicated elevations.
b. Use a wood float to compact and seal surface. Remove laitance and leave a clean surface.

3. Light Broomed Finish:

a. Steel trowel finish, as specified above, but omit final troweling and finish by drawing a fine-hair broom lightly across concrete surface.
b. Broom in direction and parallel to expansion joints, or in the case of inclined slabs, perpendicular to slope or as directed otherwise.

4. Broomed Finish:

a. Steel trowel finish, as specified above, but omit the final troweling
b. While the concrete is still soft enough, finish the surface with a stiff coarse fiber broom to produce the pattern and depth of scoring as approved by the Engineer.

5. Power Machine Finish:

a. In lieu of hand steel trowel finishing, use an approved power machine for finishing concrete floors and slabs in accordance with directions of machine manufacturer and as approved by the Engineer.
b. Do not use a power machine until the concrete has attained necessary set to allow finishing without introducing high and low spots in the slab.
c. Hand steel trowel those areas of slabs not accessible to power equipment. Provide a final steel troweling done by hand over all areas.

3.4 TOLERANCES

A. Provide floors and slabs level with a tolerance of 1/8 inch when checked with a 10 feet straightedge, except where drains occur, in which case pitch floors to drains as indicated. When either of above criteria are not met, remove, grind, or make other corrections as directed by the Engineer, at no additional compensation.

B. Measure floor flatness the day after a concrete floor is finished and before shoring is removed, in order to eliminate any effects of shrinkage, curling, and deflection. Support a 10 feet long straightedge at each end with steel gauge blocks whose thickness are equal to tolerance specified. Have no floor surface crowns so high as to prevent a 10 feet straightedge from resting on two end blocks, or low spots so that a third block of twice the tolerance in thickness can pass under the supported straightedge. Compliance with designated limits in four of five consecutive

measurements will confirm compliance, unless obvious faults are observed. Make a check for adequate slope and drainage to confirm compliance.

3.5 FIELD QUALITY CONTROL

A. Acceptance:

1. Areas requiring corrective Work will be identified by Engineer.
2. Correct defects in defined floor or slab by grinding or removal and replacement of defective Work.
3. Remeasure corrected areas by procedure as specified in TOLERANCES Article.

3.6 SCHEDULE OF FINISHES

A. Finish concrete in various specified manners either to remain as natural concrete or to receive an additional applied finish or material under another Section. Where products different from those specified are approved for use, comply with requirements of PART 1 Article entitled "Responsibility for Changing Finishes."

B. Finish base concrete for following grouped conditions as scheduled in following Paragraphs and as further specified in this Section.

C. Exposed Exterior Concrete:

1. Concrete for exterior on stairs and other horizontal areas: Broomed finish, non-slip.
2. Tops of curbs and pads: Steel trowel finish.

D. Exposed Interior Concrete:

1. Exposed interior concrete including underside slabs, beams, walls, columns and stairs and sides of openings, beams and stairs: Rubbed finish.
2. Concrete for interior walking surfaces, excluding stairs: Wood float finish.
3. Concrete for interior stairs and metal pan stairs: Light broomed finish, non-slip.

E. Concrete Associated with Structures:

1. Exposed exterior concrete excluding slabs and walking surfaces: Rubbed finish. Rub open tank walls above and to 1 foot below normal water line.
2. Walls of open topped tanks: Rubbed finish above and to 1 foot below normal water line. Off-form finish from 1 foot below normal water line to base of wall.
3. Concrete stairs, landings and platforms below normal water level in liquid retaining structures: Broomed finish, non-slip.
4. Concrete on which liquids flow or are contained: Steel troweled finish.
5. Concrete tank bottoms to be covered with grout: Broom finish as approved. Refer to Section 036000 "Grouting" for additional requirements.

F. Concrete to Receive Additional Finishes or Coatings:

1. Concrete to receive dampproofing: Off-form finish.

2. Concrete to receive capillary waterproofing: Off-form finish at vertical and overhead surfaces, light broomed finish at horizontal surfaces.
3. Concrete to receive cementitious slurry waterproofing: Off-form finish at vertical surfaces, light broomed finished horizontal surfaces.
4. Concrete to receive chemical hardener: Light broomed finish, non-slip, except at electrical rooms and areas and generator room provide wood float, non-slip.
5. Concrete to receive paint: Rubbed finish.
6. Concrete to receive seamless flooring: Once-over steel trowel finish.
7. Concrete to receive ceramic and quarry tile: Broomed finish as approved.
8. Concrete to receive vinyl and rubber surfacing and carpet: Steel trowel finish.
9. Concrete to receive rubberized asphalt sheet membrane waterproofing: Wood float finish at horizontal surfaces, rubbed finish at vertical surfaces.
10. Concrete to receive roof insulation: Consolidate, screed and wood float to required grades.

G. Miscellaneous Concrete:

1. Ribbed Concrete: Off-form finish.
2. Concrete not exposed in finished work and not scheduled to receive an additional applied finish or material: Off-form finish at vertical surfaces, consolidate and screed to grade at horizontal surfaces.
3. Concrete to have an abrasive blast finish: Refer to appropriate Paragraph in above PART 3 Article entitled “Formed Surfaces.”

END OF SECTION 033500

© 2023 CDM Smith
All Rights Reserved

This page intentionally left blank.

© 2023 CDM Smith
All Rights Reserved

SECTION 033900 - CONCRETE CURING

PART 1 - GENERAL

1.1 RELATED DOCUMENTS

A. Drawings and general provisions of the Contract, including General and Supplementary Conditions and Division 01 Specification Sections, apply to this Section.

1.2 SUMMARY

A. Section Includes: Initial and final curing of horizontal and vertical concrete surfaces.

B. Related Requirements:

1. Section 033000 “Cast-in-Place Concrete”: Coordinate Work of this Section with concrete placement, including Hot and Cold Weather and other environmental factors affecting concreting procedures.
2. Section 033500 “Concrete Finishing”: Surface finishing of concrete slabs and walls.
3. Section 099676.13 “Wastewater Collection System Coatings”: High-performance interior concrete coatings.

1.3 ACTION SUBMITTALS

A. Section 013300 “Submittal Procedures”: Requirements for submittals.

B. Product Data: Submit manufacturer's information on curing compounds, mats, paper, sheets, and film, including compatibilities and limitations.

1.4 INFORMATIONAL SUBMITTALS

A. Manufacturer's Certificate: Certify that products meet or exceed specified requirements.

B. Manufacturer Instructions: Submit detailed instructions on installation requirements, including storage and handling procedures.

C. Qualifications Statement:

1. Submit qualifications for manufacturer.

1.5 QUALITY ASSURANCE

A. Perform Work according to ACI 301, ACI 302.1, ACI 308.1, ACI 318, and ACI 350.

B. Maintain one copy of each standard affecting Work of this Section on Site.

1.6 QUALIFICATIONS

A. Manufacturer: Company specializing in manufacturing products specified in this Section with minimum five years' experience.

1.7 DELIVERY, STORAGE, AND HANDLING

A. Inspection: Accept materials on Site in manufacturer's original packaging and inspect for damage.

B. Store materials according to manufacturer instructions.

C. Protection:

1. Protect materials from moisture and dust by storing in clean, dry location.
2. Provide additional protection according to manufacturer instructions.

PART 2 - PRODUCTS

2.1 MATERIALS

A. Membrane-Curing Compound:

1. Comply with ASTM C 309, Type 1D, Class A, containing no wax, paraffin or oil and be non-yellowing.

B. Sheet Material:

1. Description: Curing paper treated to prevent separation during handling and placing, polyethylene film, or white burlap-polyethylene sheet.
2. Comply with ASTM C 171.
3. Color: White.

C. Water: Potable; not detrimental to concrete.

PART 3 - EXECUTION

3.1 EXAMINATION

A. Section 017300 “Execution”: Requirements for application examination.

B. Verify that substrate surfaces are ready to be cured.

3.2 APPLICATION

A. Curing Methods for Concrete Surfaces: Cure concrete to retain moisture and maintain a temperature of at least 50 degrees Fat concrete surface for a minimum of seven days after placement. Use the following curing methods as specified:

1. Water Curing: Keep entire concrete surface wet by ponding, continuous sprinkling, or covered with saturated burlap. Begin water curing as soon as concrete attains an initial set and maintain water curing 24 hours a day. Do not permit concrete surface to dry out at any time during curing period. Provide temperature of curing water within 20 degrees Fof concrete temperature.
2. Sheet Material Curing: Cover entire surface with sheet material. Anchor sheeting to prevent wind and air from lifting the sheeting or entrapping air under the sheet. Place and secure sheet as soon as initial concrete set occurs.
3. Membrane curing compounds will not be allowed for liquid retaining structures.
4. Membrane Curing: Apply over entire concrete surface except as follows.

    a. Do not apply curing compound on any concrete surface where additional concrete or grout is to be placed, where concrete sealers or surface coatings are to be used, or where concrete finish requires an integral floor product.
    b. Apply curing compound as soon as free water on the surface has disappeared and no water sheen is visible.
    c. Do not apply after the concrete is dry or when curing compound can be absorbed into the concrete. Apply in compliance with manufacturer's recommendations.

B. Specified Applications of Curing Methods:

1. Slabs for Liquid Retaining Structures: Water cure only.
2. Slabs on Grade and Footings (not used to retain liquids): Water cure or sheet material cure or membrane cure.
3. Structural Slabs (other than Liquid Retaining Structures): Water cure or membrane cure.
4. Horizontal Surfaces which will Receive Additional Concrete, Coatings, Grout or Other Material that Requires Bond to the substrate: Water cure.
5. Formed Surfaces:

    a. No curing, if nonabsorbent forms are left in place seven days.
    b. Water cure if absorbent forms are used.
    c. Water cure if forms are removed prior to seven days.
    d.
    e. Water cure exposed horizontal surfaces of formed walls or columns for seven days or until next placement of concrete is made.

6. Surfaces of Concrete Joints: Water cure or sheet material cure.

C. Protect finished surfaces and slabs whenever ambient conditions of humidity, temperature, sunlight and wind may result in the rapid evaporation of water from the concrete, to prevent checking and crazing, until the beginning of curing.

3.3 PROTECTION

A. Do not permit traffic over unprotected surfaces.

B. Reference Section 033000 “Cast-In-Place Concrete” for additional protection requirements.

END OF SECTION 033900

© 2023 CDM Smith
All Rights Reserved

SECTION 036000 - GROUTING

PART 1 - GENERAL

1.1 RELATED DOCUMENTS

A. Drawings and general provisions of the Contract, including General and Supplementary Conditions and Division 01 Specification Sections, apply to this Section.

1.2 SUMMARY

A. Section Includes:

1. Concrete grout.
2. Nonshrink epoxy grout.
3. Nonshrink cementitious grout.

B. Related Requirements:

1. Section 031000 “Concrete Forming and Accessories.”
2. Section 032000 “Concrete Reinforcing.”
3. Section 033000 “Cast-in-Place Concrete.”
4. Section 055000 “Metal Fabrications” for grout related to miscellaneous metals.

1.3 ACTION SUBMITTALS

A. Product Data: Submit manufacturer information regarding grout and surface preparation, mixing and installation.

1. Commercially manufactured nonshrink cementitious grout. Include catalog cuts, technical data, storage requirements, product life, working time after mixing, temperature considerations, and conformity to the specified ASTM standards.
2. Commercially manufactured nonshrink epoxy grout. Include catalog cuts, technical data, storage requirements, product life, working time after mixing, temperature considerations, and conformity to the specified ASTM standards.
3. Concrete grout. Include data as required for concrete and for fiber reinforcement as delineated in Section 033000 “Cast-In-Place Concrete.”

1.4 INFORMATIONAL SUBMITTALS

A. Manufacturer's Certificate: Certify that products meet or exceed specified requirements.

B. Manufacturer Instructions: Submit instructions for mixing, handling, surface preparation, and placing epoxy-type and nonshrink grouts.

C. Field Quality-Control Submittals: Indicate results of Contractor-furnished tests and inspections.

D. Qualifications Statement:

1. Submit qualifications for manufacturer.

1.5 QUALITY ASSURANCE

A. Manufacturer: Company specializing in manufacturing products specified in this Section with minimum ten years' experience in production and use of provided grouts.

B. Independent testing laboratory shall meet the requirements of ASTM E329 and ASTM C1077 and be acceptable to the Engineer. Laboratories affiliated with the Contractor or in which the Contractor or officers of the Contractor's organization have beneficial interest are not acceptable.

C. Pre-installation Meeting: At least ten working days before grouting, hold a pre-installation meeting to review the requirements for surface preparation, mixing, placing and curing procedures for each product proposed for use. Notify all parties involved with grouting, including the Engineer, of the meeting at least ten working days prior to its scheduled date.

D. Services of Manufacturer's Representative: Provide services of a field technician of the nonshrink grout manufacturer and epoxy grout manufacturer who has performed at least five projects of similar size and complexity during the last five years, to attend the pre-installation meeting, to be present for the initial installation of each type of nonshrink grout, and to correct installation problems.

E. Field Testing:

1. All field testing and inspection services will be provided by Owner. Assist in the sampling of materials, and cooperate by allowing free access to the work and permitting the use of ladders, scaffolding, and such incidental equipment as may be required. Methods of testing will comply with the applicable ASTM Standards.

F. Field testing of concrete grout will be as specified for concrete in Section 033000 “Cast-In-Place Concrete.”

1.6 DELIVERY, STORAGE, AND HANDLING

A. Inspection: Accept materials on Site in manufacturer's original packaging and inspect for damage.

B. Store materials according to manufacturer instructions. Limit total storage time from date of manufacture to date of installation to six months or the manufacturer’s recommended storage time, whichever is less.

C. Remove immediately from the site material which becomes damp, contains lumps, or is hardened and replace with acceptable material.

D. Protection:

1. Protect materials from moisture and dust by storing in clean, dry location.

2. Provide additional protection according to manufacturer instructions.

1.7 AMBIENT CONDITIONS

A. Maximum Conditions: Do not perform grouting if temperatures exceed 90 degrees F.

B. Minimum Conditions: Do not perform grouting if the minimum temperature of base plates, supporting concrete and grout are less than 40 degrees F. Maintain minimum temperature of 40 degrees F before, during, and after grouting, until grout has set.

PART 2 - PRODUCTS

2.1 NONSHRINK EPOXY GROUT

A. Description:

1. Pre-proportioned, prepackaged, three-component, nonshrink epoxy grout, 100 percent solids system consisting of epoxy resin, hardener, and blended aggregate.

B. Performance and Design Criteria:

1. Minimum Compressive Strength:

a. 10,000 psi at seven days.
b. Comply with ASTM C579.

2. Coefficient of Expansion:

a. 30x10-6 inch per degree F.
b. Comply with ASTM C531.

3. Minimum Tensile Strength:

a. 1,800 psi.
b. Comply with ASTM C307.

C. Product: Provide one of the following or equal:

1. Masterflow 648 CP; by BASF Building Systems.
2. Five Star HP Epoxy Grout; by Five Stars Products, Inc.
3. Sikadur 42 Grout-Pak; by Sika Corp.
4. E3-G Epoxy Grout; by Euclid Chemical Co.

2.2 NONSHRINK CEMENTITIOUS GROUT

A. Description:

1. Pre-mixed and ready-for-use formulation requiring only addition of water.

2. Nonshrink, non-corrosive, nonmetallic, non-gas forming, not containing expansive cement and no chlorides.
3. No shrinkage when tested in conformity with ASTM C827.

B. Performance and Design Criteria:

1. Certified to maintain initial placement volume or expand after set, and to meet following minimum properties when tested according to ASTM C1107/C1107M for Grades B, C, D and CRD-C621 nonshrink grout:

a. Setting Time:

1) Initial: Approximately two hours.
2) Final: Approximately three hours.
3) Comply with ASTM C191.

b. Maximum Expansion: 0.10 to 0.40 percent.
c. Minimum Compressive Strength:

1) One-Day: 4,000 psi.
2) Seven-Day: 7,000 psi.
3) 28-Day: 10,000 to 10,800 psi.
4) Comply with CRD-C621.

C. Product: Provide one of the following or equal:

1. Sika Grout 212 by Sika Corp.
2. NS Grout by The Euclid Chemical Co.
3. Five Star Grout by Five Star Products, Inc.

2.3 CONCRETE GROUT

A. Description: Conform to the requirements of Section 033000 “Cast-In-Place Concrete”, except as follows. Proportion with Type II cement, coarse and fine aggregates, water, water reducing admixture, and air entraining agent to produce specified mix performance:

1. Average Strength (ASTM C579): 3500 psi at 28 days nominal strength.
2. Maximum Coarse Aggregate Size: 3/8-inch.
3. Minimum Cement Content: 540 lbs. per cubic yard.
4. Maximum Water to Cement Ratio: 0.45.
5. Maximum Slump: 5 inches.

B. Add synthetic reinforcing fibers as specified in Section 033000 “Cast-in-Place Concrete” to the concrete grout mix at the rate of 1.5 lbs. of fibers per cubic yard of grout. Add fibers from manufacturer's pre-measured bags and according to manufacturer's recommendations to ensure complete dispersion of fiber bundles as single monofilaments within the concrete grout.

2.4 FORMWORK

A. As specified in this Section and in Section 031000 “Concrete Forming and Accessories”.

PART 3 - EXECUTION

3.1 EXAMINATION

A. Verify areas to receive grout.

3.2 PREPARATION

A. Place grout where indicated or specified over cured concrete which has attained its specified design strength unless otherwise approved by Engineer.

B. Remove defective concrete, ice, laitance, dirt, oil, grease, form release agents, paints, and other foreign material from concrete surfaces, which may affect the bond or performance of the grout by brushing, hammering, chipping, sand blasting or other similar dry mechanical means until sound and clean concrete surface is achieved. Irregular voids or projecting coarse aggregate need not be removed if they are sound, free of laitance and firmly embedded into the parent concrete.

1. Air compressors used to clean surfaces in contact with grout shall be the oil-less type or equipped with an oil trap in the airline to prevent oil from being blown onto the surface.

C. Roughen concrete lightly, but not to interfere with placement of grout.

D. Remove foreign materials from metal surfaces in contact with grout.

E. Align, level, and maintain final positioning of components to be grouted.

F. Wash concrete surfaces clean and then keep moist for at least 24 hours prior to the placement of nonshrink cementitious or cement grout. Saturation may be achieved by covering the concrete with saturated burlap bags, use of a soaker hose, or flooding the surface or other method acceptable to Engineer. Upon completion of the 24 hour period, remove visible water from the surface prior to grouting.

G. Nonshrink epoxy grouts do not require saturation of concrete substrate. Do not wet concrete surfaces to receive nonshrink epoxy grout. Completely dry surfaces in contact with epoxy grout before grouting.

H. Support equipment during alignment and installation of grout by shims, wedges, blocks, or other approved means. Prevent bond of shims, wedges and blocking devices by bond breaking coatings and remove after grouting unless otherwise approved by Engineer. Grout voids created by the removal of shims, wedges, and blocks.

3.3 INSTALLATION - GENERAL

A. Formwork:

1. Construct leakproof forms anchored and shored to withstand grout pressures.
2. Install formwork with clearances to permit proper placement of grout.
3. As specified in Section 031000 “Concrete Forming and Accessories”.

B. Placing of Grout:

1. Place grout material quickly and continuously.
2. Do not use pneumatic-pressure or dry-packing methods.
3. Apply grout from one side only to avoid entrapping air.
4. Do not vibrate placed grout mixture or permit placement if area is being vibrated by nearby equipment.
5. Thoroughly compact final installation and eliminate air pockets.
6. Do not remove leveling shims for at least 48 hours after grout has been placed.

C. Curing:

1. Prevent rapid loss of water from grout during first 48 hours by use of approved membrane curing compound or by using wet burlap bags, soaker hoses or ponding.
2. Immediately after placement, protect grout from premature drying, excessively hot or cold temperatures, and mechanical injury.
3. After grout has attained its initial set, keep damp for minimum three days.

D. Reflect existing underlying expansion joints, partial contraction joints, and construction joints through the grout.

3.4 INSTALLATION - CONCRETE GROUT

A. Inspect slabs finished under Section 033500 “Concrete Finishing” and scheduled to receive concrete grout. ICRI CSP 6 (medium scarification). Protect and keep the surface clean until placement of concrete grout.

B. Remove debris and clean the surface by sweeping and vacuuming of all dirt and other foreign materials. Pressure wash the surface. Do not flush debris into tank drain lines.

C. Saturate the concrete surface for at least 24 hours prior to placement of the concrete grout by use of saturated burlap bags, soaker hoses or ponding. Remove excess water just prior to placement of the concrete grout. Place a cement slurry immediately ahead of the concrete grout so that the slurry is moist when the grout is placed. Work the slurry over the surface with a broom until it is coated with approximately 1/16 to 1/8-inch thick cement paste.

D. Place concrete grout to final grade using the scrapers of the installed mechanical equipment as a guide for surface elevation and to eliminate high and low spots. Unless specifically approved by the equipment manufacturer, do not use mechanical scraper mechanisms powered by their motors as a finishing machine or screed to push grout.

E. Steel trowel finish as specified in Section 033500 “Concrete Finishing.” Cure the concrete grout as specified for cast-in-place concrete in Section 033900 “Concrete Curing.”

3.5 INSTALLATION - NONSHRINK EPOXY GROUTS

A. Mix in accordance with manufacturer's recommendations. Mix full batches only, to maintain proper proportions of resin, hardener, and aggregate. Do not vary the ratio of components or add

solvent to change the consistency of the grout mix. Do not overmix. Do not entrain air bubbles by mixing too quickly.

B. Monitor ambient weather conditions and contact the grout manufacturer for special placement procedures to be used for temperatures below 60 degrees F or above 90 degrees F.

C. Place grout rapidly and continuously to avoid cold joints. Place grout in lifts in accordance with manufacturer's recommendations.

D. Provide forms as specified in Paragraph 3.3A. Place grout into the designated areas and prevent entrapment of air. Fill all spaces and provide full contact between grout and adjoining surfaces. Provide grout holes and vent holes as necessary.

E. Minimize ‘shoulder’ length (extension of grout horizontally beyond base plate). In no case shall the shoulder length of the grout be greater than the grout thickness.

F. Finish grout by puddling to cover all aggregate and provide a smooth finish. Break bubbles and smooth top surface of grout in conformity with manufacturer's recommendations.

G. Epoxy grouts are self-curing and do not require the application of water. Maintain formed grout within its recommended placement temperature range for at least 24 hours after placement, until grout compressive strength reaches 1,000 psi or as recommended by manufacturer, whichever is longer.

H. Provide grout control joints as indicated on Drawings.

3.6 SCHEDULE

A. Use particular types of grout as follows:

1. General Purpose Nonshrink Cementitious Grout (CRD-C621 Grade D): Use at locations where nonshrink grout is indicated, except for base plates greater in area than 3-feet wide by 3-feet long.
2. Nonshrink Epoxy Grout: Use at locations specifically indicated to receive nonshrink epoxy grout.
3. Concrete Grout:

    a. Use for concrete grout fill within liquid retaining structures and other locations where specifically indicated.

END OF SECTION 036000

© 2023 CDM Smith
All Rights Reserved

This page intentionally left blank.

© 2023 CDM Smith
All Rights Reserved

SECTION 050519 - POST-INSTALLED ANCHORS AND REINFORCING BARS

PART 1 - GENERAL

1.1 RELATED DOCUMENTS

A. Drawings and general provisions of the Contract, including General and Supplementary Conditions and Division 01 Specification Sections, apply to this Section.

1.2 SUMMARY

A. Section Includes:

1. Post-installed adhesive and expansion anchors for concrete substrates.
2. Post-installed reinforcing bar dowels using adhesive anchoring system.

B. Related Requirements:

1. Section 032000 “Concrete Reinforcing” for concrete reinforcing.
2. Section 033000 “Cast-In-Place Concrete” and related Sections for concrete and accessories.
3. Various Sections in Division 26 related to facility utilities.
4. Various Sections in Divisions 40 and 43 related to process mechanical equipment.

1.3 ACTION SUBMITTALS

A. Post-Installed Expansion Anchors:

1. Design Data: Submit manufacturer’s specifications and data including recommended design values and physical characteristics for expansion anchors.
2. Product Data: Include construction details, material descriptions, dimensions of individual components and profiles, materials and finishes for post-installed expansion anchors installed into cracked concrete.
3. Installation Procedures: Submit procedures stating product proposed for use, and complete installation method.

B. Post-Installed Adhesive Anchoring System:

1. Design Data: Submit manufacturer’s specifications and data including recommended design values and physical characteristics, including temperature, humidity, and moisture limitations for adhesive anchoring system.
2. Product Data: Include construction details, material descriptions, dimensions of individual components and profiles, materials and finishes for post-installed adhesive anchoring system installed into cracked concrete.
3. Installation Procedures: Submit procedures stating method of drilling, product proposed for use, and complete installation method.

1.4 INFORMATIONAL SUBMITTALS

A. Installation procedure: Submit installation procedure for post-installed adhesive anchoring system; including method of drilling.

B. Certificates:

1. Installer Qualifications for Adhesive Anchoring System: Submit installer and testing agency qualifications as stated in following Paragraph of this Article.
2. Submit current International Code Council (ICC) Evaluation Service Reports (ESR) for expansion anchors and adhesive anchoring system, for installation into cracked concrete, as applicable, indicating conformance with current ICC Evaluation Service (ICC-ES) Acceptance Criteria.

C. Qualification Data:

1. Installer: Indicate manufacturer's training date and a list of personnel trained on installation of adhesive anchoring system.

D. Evaluation Reports: From ICC-ES for expansion anchors and adhesive anchoring system, for installation of post-installed anchors into cracked concrete, as applicable, indicating conformance with current ICC ES Acceptance Criteria.

1.5 QUALITY ASSURANCE

A. General: Coordinate with the work of other Sections, field verifying dimensions and work of other trades adjoining items of work before installing items specified in this Section.

B. Adhesive Anchoring System:

1. Installer Training: Conduct thorough training by the manufacturer or the manufacturer's representative. Training shall consist of the complete installation process for post-installed anchors and reinforcing bar dowels, including but not limited to:

   a. Tool selection.
   b. Hole drilling procedure.
   c. Hole preparation and cleaning techniques.
   d. Adhesive injection technique and dispenser training and maintenance.
   e. Anchor preparation and installation.
   f. Reinforcing bar dowels preparation and installation.
   g. Proof loading and torqueing.
   h. Temperature, humidity, and moisture limitations.
   i. Working time limitations.
   j. Setting time.

2. Include training for anchors and reinforcing bar dowels installed horizontally or upwardly inclined to support sustained tension loads. Install horizontally or upwardly inclined anchors and reinforcing bar dowels by personnel certified by an applicable certification program. Certification shall include written and performance tests in accordance with the ACI/CRSI Adhesive Anchor Installer Certification program, or equivalent.

3. Manufacturer's Certificate of Proper Installation: Submit upon completion of work, for the post-installed anchors and reinforcing bar dowels, including non-production and production anchors, and reinforcing bar dowels.

1.6 DELIVERY, STORAGE AND HANDLING

A. Deliver items to be incorporated into the work of other trades in sufficient time to be checked prior to installation.

B. Handle materials with cranes or derricks. Do not dump material off transportation vehicles or handle in ways that will cause damage.

C. Store materials elevated above grade and block up so they will not become bent or otherwise damaged.

D. Repair items that have become damage or corroded to satisfaction of the Engineer prior to incorporating them into the work.

PART 2 - PRODUCTS

2.1 EXPANSION ANCHORS

A. Fastening to Concrete Substrate: Zinc plated carbon steel wedge type anchors, complete with zinc plated nuts and washers, unless otherwise noted.

B. Submerged or Weather Exposed Substrates: ASTM A276 Type 316 stainless steel wedge type anchors, complete with Type 316 stainless steel nuts and washers, unless otherwise noted.

C. Meet ICC ES AC01 or ICC ES AC193.

D. Length: When length or anchor embedment is not indicated, provide length sufficient to place the wedge and expansion cone portion of the anchor at least 1 inch behind concrete reinforcing steel.

E. Basis-of-Design:

1. Anchorage designs indicated are based on Hilti Kwik-Bolt TZ, unless otherwise noted.
2. Acceptable Anchors: Hilti Kwik-Bolt TZ; Simpson Strong-Tie Strong Bolt 2 Wedge Anchor; DeWalt Power-Stud+ SD6 for stainless steel; or equal.

2.2 ADHESIVE ANCHORING SYSTEM

A. Fastening to Concrete Substrate: Manufactured system consisting of post installed threaded rods, nuts, washers, other anchoring hardware, and chemical dispenser for installation in hammer drilled holes.

1. Anchors: Meet ICC ES AC308.

2. Injection Adhesive: Two-component epoxy system consisting of a hardener and a resin, furnished in pre-measured side-by-side cartridges which keep both components separate.
3. Adhesive Cartridge: Side-by-side design to accept a static mixing nozzle which thoroughly blends both components and allows injection directly into a drilled hole.
4. Anchor: Zinc plated carbon steel or Type 316 stainless steel as indicated consisting of an all-thread anchor rod with nut and washer, of matching material to anchor rod.

    a. Basis-of-Design:

        1) Anchorage designs indicated are based on Hilti HIT- RE 500 V3, unless otherwise noted.
        2) Acceptable Manufacturers: Hilti HIT- RE 500 V3; Simpson Strong Tie SET-XP; ITW Ramset Red Head Epcon G5; or equal.

5. Reinforcing Bar Dowels: Reinforcing bar, per Section 032000.

    a. Basis-of-Design:

        1) Anchorage designs indicated are based on Hilti HIT- RE 500 V3, unless otherwise noted.
        2) Acceptable Manufacturers: Hilti HIT- RE 500 V3; Simpson Strong Tie SET-XP; ITW Ramset Red Head Epcon G5; or equal.

2.3 PERFORMANCE REQUIREMENTS

A. Performance: design anchors and reinforcing bar dowel anchorage for all anticipated loads and load combinations per ASCE/SEI 7 including omega-naught (Ωo) factors as applicable..

PART 3 - EXECUTION

3.1 INSTALLATION

A. General:

1. Install anchoring system in strict compliance with manufacturer's published installation instructions and approved Shop Drawings. Comply with recommended surface preparation, temperature, and moisture of substrate and ambient conditions.
2. Coordinate installation with Special Inspector.
3. Use drill bit of correct diameter and drill to required depth using rotary impact type hammer drills with carbide-tipped bits.
4. Drill holes perpendicular to concrete surface, unless otherwise indicated.
5. Use oil free compressed air to blast out loose particles and dust from drilled holes.

B. Expansion anchors:

1. Check expansion anchors for tightness a minimum of 24 hours after initial installation.

C. Adhesive anchoring system:

1. Perform installation only by personnel trained in anchor installation and having certification required in PART 1 - GENERAL.
2. Inject adhesive and install anchors and reinforcing bar dowels that are clean and free of dirt, oil, grease, ice, or other deleterious material which would reduce bond.

END OF SECTION 050519

© 2023 CDM Smith
All Rights Reserved

This page intentionally left blank.

© 2023 CDM Smith
All Rights Reserved

SECTION 055000 - METAL FABRICATIONS

PART 1 - GENERAL

1.1 RELATED DOCUMENTS

A. Drawings and general provisions of the Contract, including General and Supplementary Conditions and Division 01 Specification Sections, apply to this Section.

1.2 SUMMARY

A. Section Includes:

1. Steel framing and supports for applications where framing and supports are not specified in other Sections.
2. Miscellaneous items fabricated from steel, aluminum, or stainless steel.
3. Aluminum diamond plate and floor plate.
4. Castings.
5. Metal bollards.

B. Products furnished, but not installed, under this Section include the following:

1. Anchor bolts, steel pipe sleeves, slotted-channel inserts, and wedge-type inserts indicated to be cast into concrete.
2. Steel weld plates and angles for casting into concrete for applications where they are not specified in other Sections.

C. Related Requirements:

1. Section 033000 "Cast-in-Place Concrete" for installing anchor bolts, steel pipe sleeves, slotted-channel inserts, wedge-type inserts, and other items cast into concrete.
2. Section 036000 “Grouting” for non-shrink grout.
3. Section 050519 “Post-Installed Anchors and Reinforcing Bars” for anchors in various substrates.
4. Section 083483 “Floor Doors” for floor doors.
5. Various Sections in Divisions 40 - 43 for process mechanical work scopes.

1.3 COORDINATION

A. Coordinate selection of shop primers with topcoats to be applied over them. Comply with paint and coating manufacturers' written recommendations to ensure that shop primers and topcoats are compatible with one another.

B. Coordinate installation of metal fabrications that are anchored to or that receive other work. Furnish setting drawings, templates, and directions for installing anchorages, including sleeves, concrete inserts, anchor bolts, and items with integral anchors, that are to be embedded in concrete or masonry. Deliver such items to Project site in time for installation.

1.4 ACTION SUBMITTALS

A. Product Data: For the following:

1. Paint products.

B. Shop Drawings: Show fabrication and installation details. Include plans, elevations, sections, and details of metal fabrications and their connections. Show anchorage and accessory items. Provide Shop Drawings for the following:

1. Steel framing and supports for applications where framing and supports are not specified in other Sections.
2. Metal floor plate and supports.
3. Metal bollards.
4. Miscellaneous steel items.
5. Miscellaneous aluminum items.
6. Miscellaneous stainless steel items.

1.5 DELEGATED-DESIGN SUBMITTALS

A. For guardrail systems and access platforms, including analysis data signed and sealed by the qualified professional engineer responsible for their preparation. See Section 014000 “Quality Requirements” for additional delegated design requirements.

1.6 INFORMATIONAL SUBMITTALS

A. Qualifications Statement: Submit qualifications for licensed professional.

B. Mill Certificates: Signed by aluminum, steel, and stainless-steel manufacturers, certifying that products furnished comply with requirements.

C. Welding certificates.

1. Certify that welders have been qualified under AWS, within previous 12 months, to perform welds required under this Section.

D. Paint Compatibility Certificates: From manufacturers of topcoats applied over shop primers, certifying that shop primers are compatible with topcoats.

1.7 QUALITY ASSURANCE

A. Delegated Design Engineer: Licensed professional engineer experienced in design of specified Work and licensed in the State of Project location.

B. Welding Qualifications: Qualify procedures and personnel according to the following:

1. AWS D1.1, "Structural Welding Code - Steel."
2. AWS D1.2, "Structural Welding Code - Aluminum."
3. AWS D1.6, "Structural Welding Code - Stainless steel."

1.8 FIELD CONDITIONS

A. Field Measurements: Verify actual locations of walls and other construction contiguous with metal fabrications by field measurements before fabrication.

PART 2 - PRODUCTS

2.1 PERFORMANCE REQUIREMENTS

A. Delegated Design: Engage a qualified professional engineer, as defined in Section 014000 "Quality Requirements," to design guardrail systems, guardrail connections, and access platforms.

1. Design shall meet the requirements of the International Building Code 2021. Refer to Structural Drawings for general design criteria.

2.2 METALS

A. Metal Surfaces, General: Provide materials with smooth, flat surfaces unless otherwise indicated. For metal fabrications exposed to view in the completed Work, provide materials without seam marks, roller marks, rolled trade names, or blemishes.

B. Steel Wide Flange Shapes: ASTM A992.

C. Steel Other Shapes, Plates, Shapes, and Bars: ASTM A36/A36M.

D. Stainless steel Sheet, Strip, and Plate: ASTM A240/A240M or ASTM A666, Type 316 and Type 316L for welded components.

E. Stainless steel Bars and Shapes: ASTM A276, Type 316 and Type 316L for welded components.

F. Rolled-Steel Floor Plate: ASTM A786/A786M, rolled from plate complying with ASTM A36/A36M or ASTM A283/A283M, Grade C or D.

G. Steel Tubing: ASTM A500/A500M, Grade B cold-formed steel tubing.

H. Steel Pipe: ASTM A53/A53M, Type S Grade B Standard Weight (Schedule 40) unless otherwise indicated.

I. Zinc-Coated Steel Wire Rope: ASTM A741.

1. Wire-Rope Fittings: Hot-dip galvanized-steel connectors with capability to sustain, without failure, a load equal to minimum breaking strength of wire rope with which they are used.

J. Cast Iron: Either gray iron, ASTM A48/A48M, or malleable iron, ASTM A47/A47M, unless otherwise indicated.

K. Aluminum Extruded Pipe: ASTM B429, Alloy 6063 T6 and Alloy 6061 T6 as indicated.

L. Aluminum Plate and Sheet: ASTM B209, Alloy 6061-T6.

M. Aluminum Extrusions: ASTM B221, Alloy 6061 T6.

N. Aluminum-Alloy Rolled Tread Plate: ASTM B632/B632M, Alloy 6061-T6.

O. Aluminum Castings: ASTM B26/B26M, Alloy 443.0-F.

P. Bronze Extrusions: ASTM B455, Alloy UNS No. C38500 (extruded architectural bronze).

Q. Bronze Castings: ASTM B584, Alloy UNS No. C83600 (leaded red brass) or No. C84400 (leaded semired brass).

R. Nickel Silver Extrusions: ASTM B151/B151M, Alloy UNS No. C74500.

S. Nickel Silver Castings: ASTM B584, Alloy UNS No. C97600 (20 percent leaded nickel bronze).

T. Gray Iron Castings: ASTM A48, Class 35.

U. Ductile Iron Castings: ASTM A536, Grade 65-45-12.

V. Stainless steel Bolts: ASTM F593, Type 316.

W. Stainless steel Nuts: ASTM F594, Type 316.

X. Carbon Steel Bolts and Studs: ASTM A307, Grade A (hot dip galvanized nuts and washers where noted)

Y. High Strength Steel Bolts, Nuts, and Washers: ASTM F3125, Grade A325 (mechanically galvanized per ASTM B695, Class 50, where noted).

1. Elevated Temperature Exposure: Type I.
2. General Application: Type I or Type II.

Z. Galvanizing: ASTM A123, Zn w/0.05 percent minimum Ni.

AA. Galvanizing, hardware: ASTM A153, Zn w/0.05 percent minimum Ni.

BB. Galvanizing, anchor bolts: ASTM F2329, Zn w/0.05 percent minimum Ni.

CC. Welding electrodes, steel: AWS A5.1 E70xx.

2.3 FASTENERS

A. Unless otherwise noted, provide steel machine bolts for the connection of carbon steel or iron; galvanized steel or stainless-steel machine bolts for the connection of galvanized steel or iron; and stainless steel machine bolts for the connection of aluminum or stainless-steel.

B. General: Unless otherwise indicated, provide Type 316 stainless steel fasteners for exterior use and zinc-plated fasteners with coating complying with ASTM B633 or ASTM F1941, Class Fe/Zn 5, at exterior walls. Select fasteners for type, grade, and class required.

1. Provide stainless steel fasteners for fastening aluminum.
2. Provide stainless steel fasteners for fastening stainless steel.
3. Provide stainless steel fasteners for fastening nickel silver.
4. Provide bronze fasteners for fastening bronze.

C. Steel Bolts and Nuts: Regular hexagon-head bolts, ASTM A307, Grade A; with hex nuts, ASTM A563; and, where indicated, flat washers.

D. Mechanically Galvanized Steel Bolts and Nuts: Regular hexagon-head bolts, ASTM F3125, Grade A325, Type 3; with hex nuts, ASTM A563, Grade C3; and, where indicated, flat washers.

E. Stainless Steel Bolts and Nuts: Regular hexagon-head annealed stainless steel bolts, ASTM F593; with hex nuts, ASTM F594; and, where indicated, flat washers; Alloy Group 2.

F. Anchor Bolts: ASTM F 1554, Grade 36, of dimensions indicated; with nuts, ASTM A563; and, where indicated, flat washers.

1. Provide standard headed bolts with heavy hex nuts and Grade A washers.
2. Where galvanized anchor bolts are indicated or specified, provide standard headed bolts with heavy hex nuts and Grade A washers, galvanize in accordance with ASTM F2329.

G. Automatic End Welded Headed Anchor Studs and Flux Ended Studs: Cold drawn steel, ASTM A108, Grades C-1010 through C-1020.

1. Basis-of-Design - Headed Anchor Studs as Manufactured by Nelson or equal: H4L Headed Concrete Anchors.

H. Machine bolts and nuts conforming to Federal Specification FF-B-575C. Bolts and nuts shall be hexagon type. Bolts, nuts, screws, washers, and related appurtenances shall be Type 316 stainless steel.

I. Toggle Bolts: shall be Hilti, Toggler Bolt or equal.

J. Anchors, General: Anchors capable of sustaining, without failure, a load equal to six times the load imposed when installed in unit masonry and four times the load imposed when installed in concrete, as determined by testing according to ASTM E488, conducted by a qualified independent testing agency.

K. Cast-in-Place Anchors in Concrete: Either threaded type or wedge type unless otherwise indicated; galvanized ferrous castings, either ASTM A47 malleable iron or ASTM A27 cast steel. Provide bolts, washers, and shims as needed, all hot-dip galvanized per ASTM F 2329.

L. Post-Installed Anchors: Per Section 050519 “Post-Installed Anchors and Reinforcing Bars.”

2.4 MISCELLANEOUS ALUMINUM

A. Miscellaneous Aluminum: Formed true to detail, with clean, straight, sharply defined profiles and smooth surfaces of uniform color and texture and free from defects impairing strength or durability. Drill or punch holes. Smooth edges without burrs. Fabricate supplementary pieces necessary to complete each item though such pieces are not definitely shown or specified.

B. Connections and Accessories: Sufficient strength to safely withstand the stresses and strains to which they will be subjected. Close fitting exposed joints and jointed where least conspicuous. Conceal threads on threaded connections where practical. Provide continuous welds or intermittent welds on welded connections as specified or shown. Dress face of welds flush and smooth. Weld on unexposed side as much as possible in order to prevent pitting or discoloration of the aluminum exposed surface. Provide holes for temporary field connections and for attachment of the work of other trades.

C. Miscellaneous Aluminum Items: Beams, angles, closure angles, grates, floor plates, stop plates, stair nosings, and other miscellaneous aluminum indicated and not otherwise specified.

D. Angle Frames for Roof Hatches, Beams, Grates, and Similar Items: Complete with welded strap anchors attached.

E. Aluminum Finishes:

1. Anodized Finish: Give an anodic oxide treatment in accordance with AA M31C22A41 for the following items: Railing systems unless otherwise noted.
2. Mill Finish: Have a cleaned and degreased mill finish on other aluminum items.

2.5 MISCELLANEOUS STEEL

A. Miscellaneous Steel Work: Formed true to detail, with clean, straight, sharply defined profiles and smooth surfaces of uniform color and texture and free from defects impairing strength or durability. Drill or punch holes. Smooth edges without burrs. Fabricate supplementary pieces necessary to complete each item though such pieces are not definitely shown or specified.

B. Connections and Accessories: Sufficient strength to safely withstand the stresses and strains to which they will be subjected. Close fitting exposed joints and jointed where least conspicuous. Conceal thread on threaded connections where practical. Provide continuous welds or intermittent welds on welded connections as specified or shown. Dress face of welds flush and smooth. Provide holes for temporary field connections and for attachment of the work of other trades.

C. Miscellaneous Steel Items: Beams, angles, lintels, metal stairs detailed on the Drawings, support brackets, base plates for other than structural steel or equipment, closure angles, bridge crane rails, monorail hoist beams, holddown straps and lugs, door frames, splice plates, subframing at roof openings and any other miscellaneous steel indicated and not otherwise specified.

D. Steel pipe pieces for sleeves, lifting attachments and other functions: Schedule 40 pipe unless otherwise indicated. Wall and floor sleeves, of steel pipe: Provide welded circumferential steel waterstops at mid-length.

E. Steel Finish Work: Thoroughly cleaned, by effective means, of loose mill scale, rust and foreign matter. Provide one shop coat of primer compatible with finish coat after fabrication but before shipment. Omit paint within 3 inches of proposed field welds. Apply paint to dry surfaces and be thoroughly and evenly spread and well worked into joints and other open spaces.

F. Galvanizing, where required: Use hot-dip zinc process after fabrication, coating not less than 2 oz/sq.ft. of surface.

2.6 MISCELLANEOUS STAINLESS-STEEL

A. Miscellaneous Stainless-Steel Work: Formed true to detail, with clean, straight, sharply defined profiles and smooth surfaces of uniform color and texture and free from defects impairing strength or durability. Drill or punch holes. Smooth edges without burrs. Fabricate supplementary pieces necessary to complete each item though such pieces are not definitely shown or specified.

B. Connections and accessories: Sufficient strength to safely withstand the stresses and strains to which they will be subjected. Close fitting exposed joints, jointed where least conspicuous. Conceal threads on threaded connections where practical. Provide continuous welds or intermittent welds on welded connections as specified or shown. Dress face of welds flush and smooth. Provide holes for temporary field connections and for attachment of the work of other trades.

C. Beams, angles, bar racks, and other miscellaneous stainless steel.

2.7 MISCELLANEOUS MATERIALS

A. Shop Primers: Provide primers that comply with Section 099010 "Shop Priming" and Section 099100 "Painting"

B. Universal Shop Primer: Fast-curing, lead- and chromate-free, universal modified-alkyd primer complying with MPI#79 and compatible with topcoat.

1. Use primer containing pigments that make it easily distinguishable from zinc-rich primer.

C. Water-Based Primer: Emulsion type, anticorrosive primer for mildly corrosive environments that is resistant to flash rusting when applied to cleaned steel, complying with MPI#107 and compatible with topcoat.

D. Epoxy Zinc-Rich Primer: Complying with MPI#20 and compatible with topcoat.

E. Shop Primer for Galvanized Steel: Primer formulated for exterior use over zinc-coated metal and compatible with finish paint systems indicated.

F. Galvanizing Repair Paint: High-zinc-dust-content paint complying with SSPC-Paint 20 and compatible with paints specified to be used over it.

G. Bituminous Paint: Cold-applied asphalt emulsion complying with ASTM D1187.

2.8 FABRICATION, GENERAL

A. Shop Assembly: Preassemble items in the shop to greatest extent possible. Disassemble units only as necessary for shipping and handling limitations. Use connections that maintain structural value of joined pieces. Clearly mark units for reassembly and coordinated installation.

B. Cut, drill, and punch metals cleanly and accurately. Remove burrs and ease edges to a radius of approximately 1/32 inch unless otherwise indicated. Remove sharp or rough areas on exposed surfaces.

C. Form bent-metal corners to smallest radius possible without causing grain separation or otherwise impairing work.

D. Form exposed work with accurate angles and surfaces and straight edges.

E. Weld corners and seams continuously to comply with the following:

1. Use materials and methods that minimize distortion and develop strength and corrosion resistance of base metals.
2. Obtain fusion without undercut or overlap.
3. Remove welding flux immediately.
4. At exposed connections, finish exposed welds and surfaces smooth and blended so no roughness shows after finishing.

F. Form exposed connections with hairline joints, flush and smooth, using concealed fasteners or welds where possible. Where exposed fasteners are required, use Phillips flat-head (countersunk) fasteners unless otherwise indicated. Locate joints where least conspicuous.

G. Fabricate seams and other connections that are exposed to weather in a manner to exclude water. Provide weep holes where water may accumulate.

H. Cut, reinforce, drill, and tap metal fabrications as indicated to receive finish hardware, screws, and similar items.

I. Provide for anchorage of type indicated; coordinate with supporting structure. Space anchoring devices to secure metal fabrications rigidly in place and to support indicated loads.

J. Where units are indicated to be cast into concrete or built into masonry, equip with integrally welded steel strap anchors, 1/4 by 1 inch, with a minimum 6 inch embedment and 1 1/2-inch hook, not less than 8 inches from ends and corners of units and 24 inches o.c., unless otherwise indicated.

2.9 MISCELLANEOUS FRAMING AND SUPPORTS

A. General: Provide steel framing and supports not specified in other Sections as needed to complete the Work.

B. Fabricate units from steel shapes, plates, and bars of welded construction unless otherwise indicated. Fabricate to sizes, shapes, and profiles indicated and as necessary to receive adjacent construction.

1. Fabricate units from slotted channel framing where indicated.
2. Furnish inserts for units installed after concrete is placed.

C. Galvanize miscellaneous framing and supports where indicated.

D. Prime miscellaneous framing and supports with zinc-rich primer where indicated.

2.10 COVER PLATE

A. Fabricate aluminum diamond plate and floor plate having a minimum thickness of As indicated. Fabricate frames and supports of aluminum construction. Fastening devices and hardware shall be Type 316 stainless-steel. Plates shall have a mill finish.

B. Provide aluminum angle supports as indicated.

C. Include aluminum angle stiffeners, and fixed and removable sections as indicated.

D. Provide flush stainless-steel bar drop handles for lifting removable sections, one at each end of each section.

2.11 METAL BOLLARDS

A. Fabricate metal bollards from Schedule 40 steel pipe.

1. Cap bollards with round off top.
2. Where bollards are indicated to receive controls for door operators, provide cutouts for controls and holes for wire.
3. Where bollards are indicated to receive light fixtures, provide cutouts for fixtures and holes for wire.

B. Prime bollards with zinc-rich primer.

2.12 FINISHES, GENERAL

A. Finish metal fabrications after assembly.

B. Finish exposed surfaces to remove tool and die marks and stretch lines, and to blend into surrounding surface.

2.13 STEEL AND IRON FINISHES

A. Galvanizing: Hot-dip galvanize items as indicated to comply with ASTM A 153 for steel and iron hardware and with ASTM A 123 for other steel and iron products. Limit maximum nickel (Ni) content of galvanizing zinc to 0.05 percent.

1. Do not quench or apply post galvanizing treatments that might interfere with paint adhesion.

B. Preparation for Shop Priming Galvanized Items: After galvanizing, thoroughly clean railings of grease, dirt, oil, flux, and other foreign matter, and treat with metallic phosphate process.

C. Shop prime iron and steel items not indicated to be galvanized unless they are to be embedded in concrete, sprayed-on fireproofing, or masonry, or unless otherwise indicated.

1. Shop prime with primers specified in Section 099010 "Shop Priming ".

D. Preparation for Shop Priming: Prepare surfaces to comply with requirements indicated below:

1. Exterior Items: SSPC-SP 6/NACE No. 3, "Commercial Blast Cleaning."
2. Items Indicated to Receive Zinc-Rich Primer: SSPC-SP 6/NACE No. 3, "Commercial Blast Cleaning."
3. Items Indicated to Receive Primers Specified in Section 099676.13 "Wastewater Collection Systems Coatings": SSPC-SP 6/NACE No. 3, "Commercial Blast Cleaning."
4. Other Items: SSPC-SP 3, "Power Tool Cleaning."

E. Shop Priming: Apply shop primer to comply with SSPC-PA 1, "Paint Application Specification No. 1: Shop, Field, and Maintenance Painting of Steel," for shop painting.

1. Stripe paint corners, crevices, bolts, welds, and sharp edges.

2.14 ALUMINUM FINISHES

A. As-Fabricated Finish: AA-M12.

B. Clear Anodic Finish: AAMA 611, Class I, AA-M12C22A41.

PART 3 - EXECUTION

3.1 INSTALLATION, GENERAL

A. Install all items except those to be embedded in concrete or other masonry which shall be installed under Division 03. Install items to be attached to concrete or masonry after such work is completed in accordance with the details shown. Fastening to wood plugs in masonry will not be permitted.

B. Touch up abrasions in the shop primer immediately after erection. Paint areas left unprimed for welding after welding.

C. Clean and repair, after installation, zinc coating which has been burned by welding, abraded, or otherwise damaged. Thoroughly clean damaged area and remove all traces of welding flux and loose or cracked zinc coating prior to painting. Paint the cleaned area per the requirements of ASTM A780.

D. Install specialty products in accordance with the manufacturer's recommendations.

E. Weld headed anchor studs in accordance with manufacturer's recommendations.

F. Cutting, Fitting, and Placement: Perform cutting, drilling, and fitting required for installing metal fabrications. Set metal fabrications accurately in location, alignment, and elevation; with edges and surfaces level, plumb, true, and free of rack; and measured from established lines and levels.

G. Fit exposed connections accurately together to form hairline joints. Weld connections that are not to be left as exposed joints but cannot be shop welded because of shipping size limitations. Do not weld, cut, or abrade surfaces of exterior units that have been hot-dip galvanized after fabrication and are for bolted or screwed field connections.

H. Field Welding: Comply with the following requirements:

I. Use materials and methods that minimize distortion and develop strength and corrosion resistance of base metals.

J. Obtain fusion without undercut or overlap.

K. Remove welding flux immediately.

L. At exposed connections, finish exposed welds and surfaces smooth and blended so no roughness shows after finishing and contour of welded surface matches that of adjacent surface.

M. Fastening to In-Place Construction: Provide anchorage devices and fasteners where metal fabrications are required to be fastened to in-place construction. Provide threaded fasteners for use with concrete and masonry inserts, toggle bolts, through bolts, lag screws, wood screws, and other connectors.

N. Provide temporary bracing or anchors in formwork for items that are to be built into concrete, masonry, or similar construction.

O. Corrosion Protection: Coat concealed surfaces of aluminum and steel that come into contact with grout, concrete, masonry, wood, or dissimilar metals with the following:

1. Aluminum Contacting a Dissimilar Metal: Apply a heavy brush coat of zinc-chromate primer followed by two coats of aluminum metal and masonry paint to the dissimilar metal.
2. Aluminum Contacting Masonry or Concrete: Apply a heavy coat of approved alkali resistant paint to the masonry or concrete.
3. Aluminum Contacting Wood: Apply two coats of aluminum metal and masonry paint to the wood.
4. Steel Contacting Exposed Concrete or Masonry: Apply heavy bitumastic troweling mastic.
5. Between aluminum stair treads, and steel supports, insert 1/4 inch thick neoprene isolator pads, 85 plus or minus 5 Shore A durometer, sized for full width and length of bracket or support.

3.2 INSTALLING MISCELLANEOUS FRAMING AND SUPPORTS

A. General: Install framing and supports to comply with requirements of items being supported, including manufacturers' written instructions and requirements indicated on Shop Drawings.

3.3 INSTALLING METAL BOLLARDS

A. Fill metal-capped bollards solidly with concrete and allow concrete to cure seven days before installing.

B. Anchor bollards in place with concrete footings. Center and align bollards in holes 3 inches above bottom of excavation. Place concrete and vibrate or tamp for consolidation. Support and brace bollards in position until concrete has cured.

C. Fill bollards solidly with concrete, mounding top surface to shed water.

3.4 ADJUSTING AND CLEANING

A. Touchup Painting: Immediately after erection, clean field welds, bolted connections, and abraded areas. Paint uncoated and abraded areas with the same material as used for shop painting to comply with SSPC-PA 1 for touching up shop-painted surfaces.

1. Apply by brush or spray to provide a minimum 2.0-mil dry film thickness.

B. Touchup Painting: Cleaning and touchup painting of field welds, bolted connections, and abraded areas of shop paint are specified in Section 099100 "Painting."

C. Galvanized Surfaces: Clean field welds, bolted connections, and abraded areas and repair galvanizing to comply with ASTM A780.

END OF SECTION 055000

© 2023 CDM Smith
All Rights Reserved

SECTION 071113 - BITUMINOUS DAMPPROOFING

PART 1 - GENERAL

1.1 RELATED DOCUMENTS

A. Drawings and general provisions of the Contract, including General and Supplementary Conditions and Division 01 Specification Sections, apply to this Section.

1.2 SUMMARY

A. Section Includes:

1. Cold-applied, cut-back-asphalt dampproofing.
2. Cold-applied, emulsified-asphalt dampproofing.

B. Related Requirements:

1. Section 033000 "Cast-in-Place Concrete" for bituminous vapor retarders under slabs-on-grade.

1.3 ACTION SUBMITTALS

A. Product Data: For each type of product.

1.4 FIELD CONDITIONS

A. Weather Limitations: Proceed with application only when existing and forecasted weather conditions permit dampproofing to be performed according to manufacturers' written instructions.

B. Ventilation: Provide adequate ventilation during application of dampproofing in enclosed spaces. Maintain ventilation until dampproofing has cured.

PART 2 - PRODUCTS

2.1 MANUFACTURERS

A. Source Limitations: Obtain primary dampproofing materials and primers from single source from single manufacturer. Provide protection course, drainage panels and auxiliary materials recommended in writing by manufacturer of primary materials.

2.2 PERFORMANCE REQUIREMENTS

A. VOC Content: Products shall comply with VOC content limits of authorities having jurisdiction unless otherwise indicated.

2.3 COLD-APPLIED, EMULSIFIED-ASPHALT DAMPPROOFING

A. Manufacturers: Subject to compliance with requirements, available manufacturers offering products that may be incorporated into the Work include, but are not limited to the following:

1. BASF Corporation.
2. Euclid Chemical Company (The); an RPM company.
3. Karnak Corporation.
4. W.R. Meadows, Inc.

B. Trowel Coats: ASTM D1227, Type II, Class 1.

C. Fibered Brush and Spray Coats: ASTM D1227, Type II, Class 1.

D. Brush and Spray Coats: ASTM D1227, Type III, Class 1.

2.4 AUXILIARY MATERIALS

A. Furnish auxiliary materials recommended in writing by dampproofing manufacturer for intended use and compatible with bituminous dampproofing.

B. Emulsified-Asphalt Primer: ASTM D1227, Type III, Class 1, except diluted with water as recommended in writing by manufacturer.

C. Asphalt-Coated Glass Fabric: ASTM D1668/D1668M, Type I.

D. Patching Compound: Asbestos-free fibered mastic of type recommended in writing by dampproofing manufacturer.

PART 3 - EXECUTION

3.1 EXAMINATION

A. Examine substrates, areas, and conditions, with Applicator present, for compliance with requirements for surface smoothness, maximum surface moisture content, and other conditions affecting performance of the Work.

B. Proceed with application only after substrate construction and penetrating work have been completed and unsatisfactory conditions have been corrected.

3.2 PREPARATION

A. Clean, prepare, and treat substrates according to manufacturer's written instructions. Provide clean, dust-free, and dry substrates for dampproofing application.

B. Mask or otherwise protect adjoining exposed surfaces from being stained, spotted, or coated with dampproofing. Prevent dampproofing materials from entering and clogging weep holes and drains.

C. Clean substrates of projections and substances detrimental to dampproofing work; fill voids, seal joints, and remove bond breakers if any.

D. Apply patching compound to patch and fill tie holes, honeycombs, reveals, and other imperfections; cover with asphalt-coated glass fabric.

3.3 APPLICATION, GENERAL

A. Comply with manufacturer's written instructions for dampproofing application, cure time between coats, and drying time before backfilling unless otherwise indicated.

1. Apply dampproofing to provide continuous plane of protection.
2. Apply additional coats if recommended in writing by manufacturer or to achieve a smooth surface and uninterrupted coverage.

B. Where dampproofing footings and foundation walls, apply from finished-grade line to top of footing; extend over top of footing and down a minimum of 6 inches over outside face of footing.

1. Extend dampproofing 12 inches onto intersecting walls and footings, but do not extend onto surfaces exposed to view when Project is completed.
2. Install flashings and corner protection stripping at internal and external corners, changes in plane, construction joints, cracks, and where indicated as "reinforced," by embedding an 8-inch- wide strip of asphalt-coated glass fabric in a heavy coat of dampproofing. Dampproofing coat for embedding fabric is in addition to other coats required.

3.4 COLD-APPLIED, EMULSIFIED-ASPHALT DAMPPROOFING

A. Concrete Foundations: Apply two brush or spray coats at not less than 1.5 gal./100 sq. ft. for first coat and 1 gal./100 sq. ft. for second coat or one trowel coat at not less than 4 gal./100 sq. ft..

3.5 PROTECTION

A. Protect installed insulation drainage panels from damage due to UV light, harmful weather exposures, physical abuse, and other causes. Provide temporary coverings where panels are subject to abuse and cannot be concealed and protected by permanent construction immediately after installation.

B. Correct dampproofing that does not comply with requirements; repair substrates, and reapply dampproofing.

END OF SECTION 071113

© 2023 CDM Smith
All Rights Reserved

SECTION 083483 - FLOOR DOORS

PART 1 - GENERAL

1.1 RELATED DOCUMENTS

A. Drawings and general provisions of the Contract, including General and Supplementary Conditions and Division 01 Specification Sections, apply to this Section.

1.2 SUMMARY

A. Section Includes:

1. Aluminum floor doors (Access Hatches).

B. Related Requirements:

1. Section 055000 “Metal Fabrications” for metal fabrications.

1.3 ACTION SUBMITTALS

A. Product Data: For each type of product.

1. Include construction details materials, individual components and profiles, and finishes.

B. Product Schedule: For floor doors. Use same designations indicated on Drawings.

PART 2 - PRODUCTS

2.1 PERFORMANCE REQUIREMENTS

A. Fire-Rated Floor Doors: Assemblies complying with NFPA 80 that are listed and labeled by a qualified testing agency according to NFPA 288.

2.2 ALUMINUM FLOOR DOORS

A. Angle Frame Aluminum Floor Door (Flush with Finished Concrete Floor):

1. Manufacturers: Subject to compliance with requirements, provide products by one of the following or equal:

a. U.S.F. Fabrications.
b. Halliday Products.
c. BILCO Company (The).

2. Frame: Mill finish aluminum, angle profile.
3. Door: Single leaf or as indicated on the Drawings; 1/4-inch-thick, diamond-pattern mill-finish aluminum plate.
4. Loading Capacity: 300-lbf/sq. ft. pedestrian live load.
5. Options: Odor gasket.
6. Hardware:

    a. Material and Finish: Type 316 stainless steel, including latch and lifting mechanism assemblies, hold-open arms, and brackets, hinges, pins, and fasteners.
    b. Hinges: Heavy-duty butt hinges with stainless steel pins.
    c. Operating Mechanism: Adjustable counterbalancing springs, heavy-duty hold-open arm that automatically locks door open at 90 degrees, release handle with vinyl grip that allows for one-handed closure, and recessed lift handle.
    d. Latch: Stainless steel slam latch.
    e. Lock: Recessed padlock hasp.

B. Safety Accessories: Safety grating below doors.

2.3 MATERIALS

A. Stainless Steel Sheet, Strip, Plate, and Flat Bars: ASTM A666. Remove tool and die marks and stretch lines, or blend into finish.

B. Aluminum Extrusions: ASTM B221, Alloy 6063-T6.

C. Aluminum-Alloy Rolled Tread Plate: ASTM B632, Alloy 6061-T6.

D. Aluminum Sheet: ASTM B209, alloy and temper recommended by aluminum producer and finisher for type of use and finish indicated.

E. Frame Anchors: Same material as door face.

F. Inserts, Bolts, and Anchor Fasteners: Type 316 stainless steel.

2.4 FABRICATION

A. General: Provide floor doors manufactured as integral units ready for installation.

B. Metal Surfaces: For metal surfaces exposed to view in the completed Work, provide materials with smooth, flat surfaces without blemishes. Do not use materials with exposed pitting, seam marks, roller marks, rolled trade names, or roughness.

C. Grind exposed welds smooth and flush with adjacent surfaces. Furnish attachment devices and fasteners of type required to secure floor doors to types of supports indicated.

D. Latching Mechanisms: Furnish number required to hold doors in flush, smooth plane when closed.

    1. For cylinder locks, furnish two keys per lock and key all locks alike.

2. For recessed panel doors, provide access sleeves for each locking device. Furnish plastic grommets and install in holes cut through finish.

E. Aluminum: After fabrication, apply manufacturer's standard protective coating on aluminum that comes in contact with concrete.

2.5 FINISHES

A. Comply with NAAMM's "Metal Finishes Manual for Architectural and Metal Products" for recommendations for applying and designating finishes.

B. Protect mechanical finishes on exposed surfaces from damage by applying a strippable, temporary protective covering before shipping.

C. Appearance of Finished Work: Noticeable variations in same piece are not acceptable. Variations in appearance of adjoining components are acceptable if they are within the range of approved Samples and are assembled or installed to minimize contrast.

PART 3 - EXECUTION

3.1 EXAMINATION

A. Examine substrates for compliance with requirements for installation tolerances and other conditions affecting performance of the Work.

B. Proceed with installation only after unsatisfactory conditions have been corrected.

3.2 INSTALLATION, GENERAL

A. Comply with manufacturer's written instructions for installing floor doors.

B. Coordinate with reinforcing steel, pipe penetrations and other items embedded in concrete near the floor door embedded frame.

3.3 FIELD QUALITY CONTROL

A. Inspection Agency: Owner will engage a qualified inspector to perform inspections and to furnish reports to Engineer. Contractor is responsible to request the required inspection.

B. Repair or remove and replace installations where inspections indicate that they do not comply with specified requirements.

C. Reinspect repaired or replaced installations to determine if replaced or repaired door assembly installations comply with specified requirements.

3.4 ADJUSTING

A. Adjust doors and hardware, after installation, for proper operation.

END OF SECTION 083483

© 2023 CDM Smith
All Rights Reserved

SECTION 099100 – PAINTING

PART 1 - GENERAL

1.1 RELATED DOCUMENTS

A. Drawings and general provisions of the Contract, including General and Supplementary Conditions and Division 01 Specification Sections, apply to this Section.

1.2 SUMMARY

A. Section includes painting not included in other sections including all exposed structural and miscellaneous steel; mechanical and electrical equipment; sluice gates, operators and posts; conveying systems, pipe, fittings and valves; electrical conduit and appurtenances; all as specified in the attached painting schedules and all other work obviously required to be painted unless otherwise specified. Minor items not mentioned in the schedule of work shall be included in the work of this Section where they come within the general intent of this Section as stated herein.

B. Paint items noted in "Painting Schedule."

C. Provide vinyl film letters and numbers for markings as specified.

D. Paint items noted in other Specification Sections as having factory finish and other factory finished items are obviously not field painted.

E. Paint all factory finish painted items replaced, repaired or damaged during construction.

F. The various Sections are responsible, as stated in each, for preparation and field touch-up of abrasions, welds and damaged primed areas of primed or galvanized components after erection.

G. The following items will not be painted:

1. Concrete except for wetwells and junction chamber as specified in Section 099676.13.
2. Stainless steel louvers, doors and frames.
3. Finish hardware.
4. Non-ferrous metals and stainless steel, unless specifically noted otherwise.
5. Factory pre-finished architectural components.
6. Packing glands and other adjustable parts and name plates of mechanical equipment.
7. Parts of buildings not exposed to sight, unless specifically noted otherwise.
8. Maintenance equipment
9. Plumbing fixtures.
10. Mechanical, Fire Suppression, HVAC, Plumbing and Electrical equipment which has been finished painted in the factory as specified in Divisions 26, 40, and 43.

H. Related Requirements:

1. Valve identification is included in Divisions 26, 40, and 43.
2. Shop priming of equipment and piping (except copper piping) are specified in Section 099010 – Shop Priming and included in the respective Section with the item to be primed.
3. Section 055000 "Metal Fabrications" for shop priming metal fabrications.

1.3 ACTION SUBMITTALS

A. Product Data: For each type of product.

1. Indicate VOC content.

B. Samples for Initial Selection: For each type of topcoat product.

C. Samples for Verification: For each type of paint system and each color and gloss of topcoat.

1. Submit Samples on rigid backing, 8 inches square.
2. Apply coats on Samples in steps to show each coat required for system.
3. Label each coat of each Sample.
4. Label each Sample for location and application area.

D. Product List: Cross-reference to paint system and locations of application areas. Use same designations indicated on Drawings and in schedules. Include color designations.

1.4 MAINTENANCE MATERIAL SUBMITTALS

A. Furnish extra materials, from the same product run, that match products installed and that are packaged with protective covering for storage and identified with labels describing contents.

1. Paint: 5 percent, but not less than 1 gal. of each material and color applied.

1.5 QUALITY ASSURANCE

A. Shop Primers, specified in Section 099100 “Shop Primers,” and other Sections are required to be certified by the manufacturer of the field applied painting manufacturer to be compatible with the materials specified in this section.

B. Mockups: Apply mockups of each paint system indicated and each color and finish selected to verify preliminary selections made under Sample submittals and to demonstrate aesthetic effects and set quality standards for materials and execution.

1. Engineer will select one surface to represent surfaces and conditions for application of each paint system.

   a. Vertical and Horizontal Surfaces: Provide samples of at least 100 sq. ft..
   b. Other Items: Engineer will designate items or areas required.

2. Final approval of color selections will be based on mockups.

a. If preliminary color selections are not approved, apply additional mockups of additional colors selected by Engineer at no added cost to Owner.

3. Approval of mockups does not constitute approval of deviations from the Contract Documents contained in mockups unless Engineer specifically approves such deviations in writing.

1.6 DELIVERY, STORAGE, AND HANDLING

A. Store materials not in use in tightly covered containers in well-ventilated areas with ambient temperatures continuously maintained at not less than 45 deg F.

1. Maintain containers in clean condition, free of foreign materials and residue.
2. Remove rags and waste from storage areas daily.

1.7 FIELD CONDITIONS

A. Apply paints only when temperature of surfaces to be painted and ambient air temperatures are between 50 and 95 deg F.

B. Do not apply paints in snow, rain, fog, or mist; when relative humidity exceeds 85 percent; at temperatures less than 5 deg F above the dew point; or to damp or wet surfaces.

PART 2 - PRODUCTS

2.1 MANUFACTURERS

A. Manufacturers: Provide products by one of the following:

1. Tnemec, Inc.(TN).
2. The Sherwin Williams Company (SW).
3. PPG Architectural Finishes, Inc. (PPG).
4. PPG Architectural Finishes, Inc. Ameron (AME).
5. Carboline.
6. Or equal.

2.2 MATERIALS

A. Material Compatibility:

1. Provide materials for use within each coating system that are compatible with one another and substrates indicated, under conditions of service and application as demonstrated by manufacturer, based on testing and field experience.
2. Provide products of same manufacturer for each coat in a coating system.

B. Use paint materials without adulteration and mixed, thinned and applied in strict accordance with manufacturer's directions for the applicable materials and surface.

C. Colors: As selected by Engineer from manufacturer's full range.

2.3 COLOR CODING FOR PIPES AND EQUIPMENT

A. Pipes shall be painted in accordance with TCEQ 290.42.

B. The color code establishes, defines and assigns a definite color for each process system. Paint all elements which are an integral part of the system, that is originating from the equipment and/or supplying the equipment, between and up to but not including the fixed flanges nor the flexible conduit connections on the equipment. Paint valves and fittings in the color of the main body of the pipe.

C. All pipes and equipment shall be painted with final coat color selected by the Engineer and shall be treated as an integral part of the Contract.

D. All hanger saddles and pipe support floor stands shall be painted the same color and with the same paint as the pipe it supports. Hanger rods and hanger rod connections to building structure shall be painted to match the color of the wall or ceiling to which it is attached.

2.4 LETTERING OF TITLES

A. Indicate the name of the materials in each pipeline and alongside this an arrow indicating the direction of flow of fluids on each pipe system. Locate the titles shall not more than 26 feet apart and directly adjacent to each side of any wall the pipeline breaches, adjacent to each side of the valve regulator, flowcheck, strainer cleanout and all pieces of equipment.

B. Identify titles by the identity of the contents with complete name at least once in each space through which it passes and thereafter by generally recognized abbreviations, letters or numerals as approved. Place identification title locations in general they shall be placed where the view is unobstructed and on the two lower quarters of pipe or covering where they are overhead. Title to be clearly visible from operating positions and adjacent to all control valves.

C. Die cut numbers and letters from 3.5 mil vinyl film and pre-space them on carrier tape. Protect adhesive and finish surface with one-piece removable liners. Use white or black to provide high contrast to the substrate color.

D. Letter size shall be as indicated in the following table:
1.

1. OUTSIDE DIAMETER OF PIPE OR COVERING	SIZE OF LEGEND LETTERS
2. 3/4-in to 1-1/4-in	1/2-in
3. 1-1/2-in to 2-in	3/4-in

2-1/2-in to 6-in	1-1/2-in
8-in to 10-in	2-1/2-in
Over 10-in	3-in

E. Use Type B ASI/2 by ASI Sign Systems; Architectural Graphics Inc. or equal. Provide Optima Bold, upper case letter type. Use Grid 2 spacing. Match arrow to letter type and size. Follow the instructions of the manufacturer in respect to storage, surface preparation and applications of letters.

2.5 TITLES FOR EQUIPMENT

A. Provide titles consisting of vinyl film as specified above on all equipment using 1-in high Optima Bold upper case, Grid 2 spacing. Use white or black to provide high contrast to the substrate color. Use titles shown on mechanical drawings for bidding purposes. Mount titles at eye level on machines or at the upper most broad vertical surface of low equipment. Where more than one piece of the equipment item to be titled exists, number the items consecutively as indicated on the mechanical drawings or as directed by the Engineer; for example, Pump No. 1, Pump No. 2, etc. Titles shall be composed in more than one line if required and justified on the left-hand side.

2.6 TESTING EQUIPMENT

A. Furnish wet and dry film thickness gauges, electronic moisture meter and all other equipment required by the Engineer for inspection.

PART 3 - EXECUTION

3.1 EXAMINATION

A. Examine substrates and conditions, with Applicator present, for compliance with requirements for maximum moisture content and other conditions affecting performance of work.

1. Maximum Moisture Content of Substrates: When measured with an electronic moisture meter as follows:

   a. Concrete: 12 percent.
   b. Masonry (Clay and CMU): 12 percent.
   c. Wood: 15 percent.
   d. Gypsum Board: 12 percent.

B. Verify compatibility with and suitability of substrates, including compatibility with existing finishes or primers.

C. Proceed with coating application only after unsatisfactory conditions have been corrected.

1. Application of coating indicates acceptance of surfaces and conditions.

3.2 PREPARATION

A. Comply with manufacturer's written instructions and recommendations in "MPI Architectural Painting Specification Manual" applicable to substrates and paint systems indicated.

B. Remove hardware, covers, plates, and similar items already in place that are removable and are not to be painted. If removal is impractical or impossible because of size or weight of item, provide surface-applied protection before surface preparation and painting.

   1. After completing painting operations, use workers skilled in the trades involved to reinstall items that were removed. Remove surface-applied protection.

C. Clean substrates of substances that could impair bond of paints, including dust, dirt, oil, grease, and incompatible paints and encapsulants.

   1. Remove incompatible primers and reprime substrate with compatible primers or apply tie coat as required to produce paint systems indicated.

D. Concrete Substrates: Remove release agents, curing compounds, efflorescence, and chalk. Do not paint surfaces if moisture content or alkalinity of surfaces to be painted exceeds that permitted in manufacturer's written instructions.

E. Masonry Substrates: Remove efflorescence and chalk. Do not paint surfaces if moisture content or alkalinity of surfaces or mortar joints exceeds that permitted in manufacturer's written instructions.

F. Shop-Primed Steel Substrates: Clean field welds, bolted connections, and areas where shop paint is abraded. Paint exposed areas with the same material as used for shop priming to comply with SSPC-PA 1 for touching up shop-primed surfaces.

G. Galvanized-Metal Substrates: Remove grease and oil residue from galvanized sheet metal by mechanical methods to produce clean, lightly etched surfaces that promote adhesion of subsequently applied paints.

H. Aluminum Substrates: Remove loose surface oxidation.

I. Wood Substrates:

   1. Scrape and clean knots. Before applying primer, apply coat of knot sealer recommended in writing by topcoat manufacturer for exterior use in paint system indicated.
   2. Sand surfaces that will be exposed to view, and dust off.
   3. Prime edges, ends, faces, undersides, and backsides of wood.
   4. After priming, fill holes and imperfections in the finish surfaces with putty or plastic wood filler. Sand smooth when dried.

J. Plastic Trim Fabrication Substrates: Remove dust, dirt, and other foreign material that might impair bond of paints to substrates.

K. Mock-up: Provide a sample area of the finished work prepared in strict accordance with this Section to demonstrate the quality and workmanship of painting. When paint colors are required

to match existing installed colors, provide as many paint manufacturer's warehouse mixed colors until accepted by the Engineer.

3.3 APPLICATION

A. Apply paints according to manufacturer's written instructions and recommendations in "MPI Architectural Painting Specification Manual."

1. Use applicators and techniques suited for paint and substrate indicated.
2. Paint surfaces behind movable items same as similar exposed surfaces. Before final installation, paint surfaces behind permanently fixed items with prime coat only.
3. Paint both sides and edges of exterior doors and entire exposed surface of exterior door frames.

4. Paint entire exposed surface of window frames and sashes.
5. Do not paint over labels of independent testing agencies or equipment name, identification, performance rating, or nomenclature plates.
6. Primers specified in painting schedules may be omitted on items that are factory primed or factory finished if acceptable to topcoat manufacturers.

B. Tint undercoats same color as topcoat, but tint each undercoat a lighter shade to facilitate identification of each coat if multiple coats of same material are to be applied. Provide sufficient difference in shade of undercoats to distinguish each separate coat.

C. If undercoats or other conditions show through topcoat, apply additional coats until cured film has a uniform paint finish, color, and appearance.

D. Apply paints to produce surface films without cloudiness, spotting, holidays, laps, brush marks, roller tracking, runs, sags, ropiness, or other surface imperfections. Cut in sharp lines and color breaks.

E. Painting Fire Suppression, Plumbing, HVAC, Electrical, Communication, and Electronic Safety and Security Work:

1. Paint the following work where exposed to view:

a. Equipment, including panelboards and switch gear.
b. Uninsulated metal piping.
c. Uninsulated plastic piping.
d. Pipe hangers and supports.
e. Metal conduit.
f. Plastic conduit.
g. Tanks that do not have factory-applied final finishes.

3.4 FIELD QUALITY CONTROL

A. Dry Film Thickness Testing: Owner may engage the services of a qualified testing and inspecting agency to inspect and test paint for dry film thickness.

1. Contractor shall touch up and restore painted surfaces damaged by testing.
2. If test results show that dry film thickness of applied paint does not comply with paint manufacturer's written recommendations, Contractor shall pay for testing and apply additional coats as needed to provide dry film thickness that complies with paint manufacturer's written recommendations.

3.5 CLEANING AND PROTECTION

A. At end of each workday, remove rubbish, empty cans, rags, and other discarded materials from Project site.

B. After completing paint application, clean spattered surfaces. Remove spattered paints by washing, scraping, or other methods. Do not scratch or damage adjacent finished surfaces.

C. Protect work of other trades against damage from paint application. Correct damage to work of other trades by cleaning, repairing, replacing, and refinishing, as approved by Engineer, and leave in an undamaged condition.

D. At completion of construction activities of other trades, touch up and restore damaged or defaced painted surfaces.

3.6 PAINTING SCHEDULE

A. Dry Film Thickness (DFT) for each paint product is not part of paint schedule. Submit both the Wet Film Thickness (WFT) and DFT for each product as part of submittal process. Apply paint and coating products to comply with manufacturer’s DFT thickness and application recommendations in the approved submittal.

B. The following types of paints by Tnemec Co. (TN), The Sherwin Williams Company (SW), PPG Protective & Marine Coatings, (PPG), and Ameron International (AME) have been used as a basis for the paint schedule; use one of these paints or equal:

C. Epoxy:

1. TN:Hi-build Epoxoline II, Series N69.
2. SW: Macropoxy 646, B58 Series.
3. PPG: Pitt-Guard 97-145 Series Epoxy Mastic.
4. AME: Amerlock 2/400 Series Epoxy.

D. Waterborne Cementitious Acrylic: Result in pinhole free surface.

1. TN:Envirofil, Series 130-6602.
2. SW: Cement-Plex 875, B42 Series.
3. PPG: Cementitious Waterproofing Block Filler 95-217 Series.
4. AME: Amerlock 400 BF Epoxy Block Filler.

E. High-Build Acrylic Polyurethane Enamel:

1. TN:Endura-Shield - semi-gloss, Series V73.

2. SW: Acrolon 218 HS, B65 Series.
3. PPG: Pitthane HB Semigloss Urethane 95-8800 Series.
4. AME: Amercoat 450HSG Polyurethane.

F. High Heat Silicone Aluminum (to 600 degrees F):

1. TN:No product.
2. SW: Heat-Flex Hi-Temp 1000 Aluminum, B59-820 Series.
3. PPG: Speedhide 6-220 Series Silicone Aluminum Coating.
4. AME: Amercoat 878 Silicone Aluminum Coating.

G. Tie Coat, Low VOC, Epoxy:

1. TN:FC Typoxy, Series V27.
2. SW: Macropoxy 646, B58 Series.
3. PPG: Pitt-Guard Epoxy Mastic 95-245 Series.
4. AME: Amercoat 385 Multi-Purpose Epoxy.

H. Acrylic Latex Emulsion, Eggshell Finish:

1. TN:Tneme-Cryl, Series 6.
2. SW: DTM Primer/Finish, B66 Series.
3. PPG: Pitt-Tech Plus 90-1110 Series Satin DTM Acrylic.
4. AME: Amercoat 220 Waterborne Acrylic.

I. Vinyl Acrylic Surface Sealer:

1. TN:PVA Sealer, Series 51.
2. SW: Prep-Rite 200 Primer, B28 Series.
3. PPG: Speedhide 6-2 Vinyl Acrylic Drywall Primer.
4. AME: Amercoat 148 Acrylic Primer.

J. The following surfaces shall have the types of paint scheduled below applied at the dry film thickness (DFT) in mils per coat as recommended by manufacturer:

1. Exterior non- submerged ferrous metals (except first coat-hollow metal-pressed metal work):

a. First Coat: On properly prepared unprimed metal or for touch-up:

1) TN: Hi-build Epoxoline II, Series N69.
2) SW: Macropoxy 646, B58 Series.
3) PPG: Pitt-Guard 97-145 Series Epoxy Mastic.
4) AME: Amerlock 2/400 Series Epoxy.

b. Second Coat:

1) TN: Hi-build Epoxoline II, Series N69.
2) SW: Macropoxy 646, B58 Series.
3) PPG: Pitt-Guard 97-145 Series Epoxy Mastic.
4) AME: Amerlock 2/400 Series Epoxy.

c. Third Coat:

1) TN: Endura-Shield - semi-gloss, Series V73.
2) SW: Acrolon 218 HS, B65 Series.
3) PPG: Pitthane HB Semigloss Urethane 95-8800 Series.
4) AME: Amercoat 450HSG Polyurethane.

2. Interior non-submerged ferrous metals (except first coat of previously painted metal work), on properly prepared unprimed metal or for touch-up:

a. First Coat:

1) TN: Hi-build Epoxoline II, Series N69.
2) SW: Macropoxy 646, B58 Series.
3) PPG: Pitt-Guard 97-145 Series Epoxy Mastic.
4) AME: Amerlock 2/400 Series Epoxy.

b. Second and Third Coats:

1) TN: Hi-build Epoxoline II, Series N69.
2) SW: Macropoxy 646, B58 Series.
3) PPG: Pitt-Guard 97-145 Series Epoxy Mastic.
4) PPG: Amerlock 2/400 Series Epoxy.

3. Submerged ferrous metals and ferrous metals subject to submersion or splashing. Surface shall be lightly sanded or abraded before application of first field coat.

a. First and Second Coats:

1) TN: Hi-build Epoxoline II, Series N69.
2) SW: Macropoxy 646, B58 Series.
3) PPG: Pitt-Guard 97-145 Series Epoxy Mastic.
4) PPG: Amerlock 2/400 Series Epoxy.

4. Plastic piping and, where scheduled to be painted, plastic components:

a. First and Second Coats:

1) TN: Hi-build Epoxoline II, Series N69.
2) SW: Macropoxy 646, B58 Series.
3) PPG: Pitt-Guard 97-145 Series Epoxy Mastic.
4) AME: Amerlock 2/400 Series Epoxy.

5. Pipe insulation: (Plastic or metal sheathed insulation-paint as scheduled for appropriate substrate):

a. First Coat:

1) TN: Vinyl-Acrylic Sealer, No. 51-792.
2) SW: Prep-Rite 200, B28 Series.
3) PPG: Speedhide 6-2 Vinyl Acrylic Drywall Primer.

4) AME: Amercoat 148 Acrylic Primer.

b. Second and Third Coats:

1) TN: Hi-build Epoxoline II, Series N69.
2) SW: Macropoxy 646, B58 Series.
3) PPG: Pitt-Guard 97-145 Series Epoxy Mastic.
4) AME: Amerlock 2/400 Series Epoxy.

6. Previously Painted Metal Surfaces:

a. First coat on substrates prepared as approved and replacing first coat of above-specified systems. Complete painting with remainder of specified system for each type of substrate.
b. First Coat:

1) TN: FC Typoxy, Series V27.
2) SW: Macropoxy 646, B58 Series.
3) PPG: Pitt-Guard 97-145 Series Epoxy Mastic.
4) AME: Amerlock 2/400 Series Epoxy.

END OF SECTION 099100

© 2023 CDM Smith
All Rights Reserved

This page intentionally left blank.

© 2023 CDM Smith
All Rights Reserved

SECTION 099676.13 – WASTEWATER COLLECTION SYSTEM COATINGS

PART 1 - GENERAL

1.1 RELATED DOCUMENTS

A. Drawings and general provisions of the Contract, including General and Supplementary Conditions and Division 01 Specification Sections, apply to this Section.

1.2 SUMMARY

A. Section includes surface preparation and application of high-performance coating systems on concrete vertical and horizontal surfaces required to supply and install corrosion resistant coating on all concrete surfaces within the wetwells, junction chamber, and all sewer manholes. Corrosion resistant coating shall be capable of withstanding a pH range of < 2.0 and up to 12.0 when in service. Corrosion resistant coating shall be applied to the interior concrete wall surfaces and underside of top slab of all wastewater structures.

B. Related Requirements:
1. Section 018819 “Tightness Testing Performance Requirements.”
2. Division 03 “Concrete” sections for concrete construction.
3. Division 05 for metal embeds, post-installed anchors, and attachments to concrete.
4. Section 099010 “Shop Priming” for shop priming.
5. Section 099100 "Painting" for general field painting.

1.3 DEFINITIONS

A. MPI Gloss Levels: Following define gloss levels according to ASTM D 523:

1. MPI Gloss Level 1 - Traditional Matte or Flat Finish: Maximum five units at 60 degrees and 10 units at 85 degrees.
2. MPI Gloss Level 2 - Velvet-Like Finish: Maximum 10 units at 60 degrees and 10 to 35 units at 85 degrees.
3. MPI Gloss Level 3 - Traditional Eggshell-Like Finish: 10 to 25 units at 60 degrees and 10 to 35 units at 85 degrees.
4. MPI Gloss Level 4 - Satin-Like Finish: 20 to 35 units at 60 degrees and minimum 35 units at 85 degrees.
5. MPI Gloss Level 5 - Traditional Semi-Gloss Finish: 35 to 70 units at 60 degrees.
6. MPI Gloss Level 6 - Traditional Gloss: 70 to 85 units at 60 degrees.
7. MPI Gloss Level 7 - High Gloss: Minimum 85 units at 60 degrees.

B. Mild Exposure: Normal outdoor weathering and standard industrial exposures are considered mild environments. A normal industrial setting is one with low to moderate levels of humidity and condensation and little development of mold and mildew. A mild environment has only limited exposure to chemical fumes or mist, and occasional occurrences of chemical spills or splash. Regular cleaning with standard commercial chemical cleaning agents, with only

occasional use of stronger chemical cleaning agents, is also characteristics of a mild environment. Metal corrosion will occur in a mild environment, but it is minimal. These are generally dry areas with little to no Hydrogen Sulfide (H2S), Chlorine, or other corrosive chemicals, or the area is damp.

C. Moderate Exposure: An atmosphere that can be characterized as corrosive, within reasonable limits, is considered a moderate environment. In an industrial setting, a moderate environment indicates intermittent exposure to high humidity and condensation with occasional development of mold and mildew. Exposure to heavy concentrations of chemical fumes or mist and accidental chemical spills or splash occurs occasionally in a moderate environment. Regular use of strong chemicals rather than standard commercial cleaning agent also changes a mild environment into a moderate one. Metal corrosion is common in a moderate environment.

D. Severe Exposure: An aggressively corrosive industrial or predominantly chemical environment with regular exposure to strong chemical fumes, mists, and dust is considered a severe environment. In an industrial setting, a severe environment is one with sustained exposure to high humidity and condensation that results in heavy development of mold and mildew. Frequent spilling and splashing of strong chemicals (acids, alkalis, oxidizers, and solvents) are also characteristic of a severe environment. Metal corrosion can be expected in a severe environment. Immersion conditions, marine environment with sustained exposure to saltwater spray, and arctic environment with long periods of extremely low temperature are considered severe environments. These are areas where if no high-performance coatings are applied on steel or concrete, very early failure and structural damage will be evident.

1.4 ACTION SUBMITTALS

A. Product Data: For each type of product. Include preparation requirements and application instructions.

1. Indicate VOC content.

B. Product List: Use same designations indicated on Drawings and in Collection System Coating Schedule. Include color designations and product runs (batch numbers).

C. High-performance Coating System Manufacturer's written instructions and drawing details for treatment of coating materials at terminations in the structures to be coated including: pipe penetrations, metal embedments, gate frames, and other terminations to be determined from the Contract Drawings. This information shall also include detail treatment for the corrosion resistant coating system at all joints in the concrete.

1.5 INFORMATIONAL SUBMITTALS

A. Qualification Data: For Installer and manufacturer.

B. Prequalification Data: Coating system installation contractor (Applicator) must be prequalified and meet the criteria stated in Paragraph 1.6-A to be considered an approved specialty concrete repair and rehabilitation (SCRR) contractor. A complete prequalification package shall be submitted to the Engineer for consideration 14 days prior to the date set for the receipt of bids. The prequalification submittal shall include the following items:

1. The Applicator firm shall provide a company profile detailing its experience with specialty concrete repair and rehabilitation.
2. The firm shall provide a copy of their current General Contractor's license.
3. The firm shall provide a complete record of experience showing ten previous and concurrent years of providing maintenance services on structures of similar sizes and types. The record shall include the size/type of structure, name, address and telephone number of the Owner and the year of construction.
4. The firm shall be able to provide copies of certificates from the manufacturer of any repair product once determined, within 5 business days upon request.
5. The firm shall provide documentation verifying compliance with the SPCC, NACE, and safety qualifications listed in Paragraph 1.6-A.

C. Product Certificates: Notarized certificate for coating system stating that product meets requirements of this Section.

1.6 QUALITY ASSURANCE

A. Minimum qualifications shall be as follows:

1. Company

   a. All surface preparation work shall be performed by a specialty concrete repair and rehabilitation (SCRR) contractor that shall have been licensed in the state where the project is located for not less than 10 years.
   b. The SCRR shall be a firm with a minimum of 10 previous and concurrent years of providing maintenance services on structures of similar sizes and types of those included in this specification to ensure the owner that it has the organization, technical skill, quality control, reliability, and financial stability to maintain and guarantee the structures in accordance with the quality required by these specifications.
   c. The SCRR shall be approved and/or certified by the manufacturer of any repair product to be used.

2. The Society for Protective Coatings (SSPC)

   a. All surface preparation and rehabilitation work shall be performed under the supervision of an SPSS Quality Control Supervisor (QCS) and Concrete Coating Inspector (CCI). QCS and CCI shall be a full-time staff member of the firm with not less than 5 years of experience.

3. National Association of Corrosion Engineers (NACE)

   a. All surface preparation and rehabilitation work shall be performed under the supervision of a NACE Certified Coating Inspector (CIP) – Level 3. The CIP – Level 3 shall be a full-time staff member of the firm.

4. Safety

a. The SCRR firm shall have a full written safety manual to include programs for the following areas of safety: Confined Space, Personal Protective Equipment (PPE), and Scaffold.
b. All project managers, superintendents, safety personnel, or other supervision representing the SCRR shall be OSHA 30 certified.

B. The coating manufacturer shall furnish an affidavit attesting to the successful use of its material as a coating for concrete structures for a minimum period of 5 years in wastewater headspace conditions equivalent to the different exposures listed in Paragraph 1.2 that are corrosive or otherwise detrimental to concrete and certifying that submitted products are suitable for application on the surfaces and for the service conditions. The affidavit shall also document verification by the manufacturer of the corrosion resistant coating system of the subcontractor's qualification as an approved installer of the specified coating materials and verify that the personnel who will perform this work have been trained to the satisfaction of the selected manufacturer. This affidavit shall also list the application personnel who will work on the corrosion resistant coating installation covered by this Section. The names of the tradespersons performing surface preparation, clean-up, and other miscellaneous labor functions will not have to be listed on the affidavit.

C. The coating system shall be applied by a qualified applicator trained in handling, mixing and application of the material including the required surface cleaning and preparation. A list of at least five references of projects using the specified coating system shall be provided to the Engineer for review. These references shall include contact names and telephone numbers such that their references can be verified.

D. Field quality control inspection and testing of the coating work will be provided by an independent third-party inspection company (Independent Inspector) in accordance with Part 3 of this Section.

E. The Contractor shall not use or retain contaminated, outdated, or diluted materials for resurfacing. All materials used shall be from new containers not previously opened.

F. The manufacturer's requirements, including application procedures and safety procedures shall be followed in detail and strictly adhered to at all times when the work is in progress.

G. The Contractor shall use only products of the approved manufacturer and shall use products of only one manufacturer in any one system.

H. The Contractor shall make available all locations and phases of the work for access by the Engineer or other personnel designated by the Engineer. The Contractor shall provide ventilation and egress to safely access the coating work.

I. The Contractor shall conduct his/her work such that the coating system is installed as specified herein and as recommended by the coating system manufacturer. Any nonconforming coating system work shall be corrected as specified herein or as recommended by the manufacturer at no additional cost to the Owner.

J. The Contractor is ultimately responsible for the workmanship and quality of the coating installation. Inspections by the Coating Manufacturer, the Engineer, or others does not limit the Contractor's responsibility for the quality of the coating work.

K. If any requirements of this specification are contradicted by a referenced standard or vice-versa, the matter shall be resolved in writing by the Engineer.

L. Mockups: Apply mockups of each coating system indicated to verify preliminary selections made under Sample submittals, to demonstrate aesthetic effects, and to set quality standards for materials and execution.

1. Engineer will select one surface to represent surfaces and conditions for application of each coating system. Engineer will designate items or areas required.
2. Final approval of color selections will be based on mockups.

a. If preliminary color selections are not approved, apply additional mockups of additional colors selected by Engineer at no added cost to Owner.

3. Approval of mockups does not constitute approval of deviations from the Contract Documents contained in mockups unless Engineer specifically approves such deviations in writing.
4. Subject to compliance with requirements, approved mockups may become part of the completed Work if undisturbed at time of Substantial Completion.

1.7 DELIVERY, STORAGE, AND HANDLING

A. Store materials not in use in tightly covered containers in well-ventilated areas with ambient temperatures continuously maintained at not less than 45 deg F.

1. Maintain containers in clean condition, free of foreign materials and residue.
2. Remove rags and waste from storage areas daily.
3. Deliver materials on site in factory sealed containers from the manufacturer. Do not use materials from previous jobs.

1.8 FIELD CONDITIONS

A. Apply coatings only when temperature of surfaces to be coated and ambient air temperatures are within the coatings manufacturer's recommendations.

B. Do not apply coatings when relative humidity exceeds 85 percent; at temperatures less than 5 deg F above the dew point and rising; or to damp or wet surfaces.

C. All new concrete shall be allowed to cure for 28 days minimum before surface preparation activities begin.

D. Apply coatings only when ambient air temperature is between 65 and 95 deg F.

E. Substrate surface temperature – 50 deg F minimum, and at least 10 deg F higher than dew point temperature.

F. No dust generation shall be allowed during this period.

G. Concrete pH shall be between 9.0 and 11.5 or as recommended by the high-performance coating manufacturer.

1.9 WARRANTY

A. The Manufacturer warrants that the product and installation meet that quality and technical standards published in their current literature and be free from defects, including adhesion, bubbling, deterioration or failure of coating for a period of 5 years from date of Substantial Completion.

B. The applicator shall warrant the installed corrosion-resistant coating system as free from material and workmanship defects for a minimum period of 5 years from date of Substantial Completion (at no additional cost to the Owner). The warranty shall include yearly inspections to assess the condition of the new coating system.

PART 2 - PRODUCTS

2.1 MANUFACTURERS

A. Manufacturers: Subject to compliance with requirements, available manufacturers offering products that may be incorporated into the Work include, but are not limited to the following:

1. Wetwell and Junction Chamber Coating System (Severe Exposure)
   a. Carboline Company (CAR).
   b. The Sherwin-Williams Company (SWC).
   c. Tnemec Company, Inc. (TNE).
2. Sewer Manholes (Severe Exposure)
   a. Raven Lining Systems
   b. Warren Environmental
   c. Sprayroq Inc.

2.2 HIGH-PERFORMANCE COATINGS

A. Material Compatibility:

1. Each coating system within indicated substrates uses compatible material with one another, under conditions of service and application as demonstrated by manufacturer, based on testing and field experience.
2. Topcoat manufacturer recommends products in writing for use in each coating system coat and on indicated substrate.
3. Use products from same manufacturer for each coat in coating system.

2.3 SOURCE QUALITY CONTROL

A. Testing of Coating Materials: Owner reserves the right to invoke the following procedure:

1. Owner will engage services of a qualified testing agency to sample coating materials. Contractor will be notified in advance and may be present when samples are taken. If coating materials have already been delivered to Project site, samples may be taken at Project site. Samples will be identified, sealed, and certified by testing agency.
2. Testing agency will perform tests for compliance with product requirements.

3. Owner may direct Contractor to stop applying coatings if test results show materials being used do not comply with product requirements. Contractor shall remove noncomplying coating materials from Project site, pay for testing, and recoat surfaces coated with rejected materials. Contractor will be required to remove rejected materials from previously coated surfaces if, on recoating with complying materials, both coatings are incompatible.

PART 3 - EXECUTION

3.1 EXAMINATION

A. Examine substrates and conditions, with Applicator and Independent Inspector present, for compliance with requirements for maximum moisture content and other conditions affecting performance of the Work.

B. Maximum Moisture Content of Concrete Substrates: 12 percent, when measured with electronic moisture meter.

C. Verify suitability of substrates, including surface conditions and compatibility, with existing finishes and primers.

1. Application of coating indicates acceptance of surfaces and conditions.

D. Proceed with coating application only after unsatisfactory conditions have been corrected. Application of coating indicates acceptance of surfaces and conditions.

3.2 CONTROL OF AMBIENT CONDITIONS IN STRUCTURES TO BE COATED

A. Control ambient conditions in the structures to be coated, and provide protective enclosures during surface preparation, application, and curing, to meet the specified conditions. This control work shall be continued throughout the coating system installation and curing.

B. The minimum ambient condition requirements inside the structures for coating system work shall be as follows:

1. During all phases of coating system installation and curing:

a. Air temperature – 65 deg F minimum
b. Relative humidity - below 85%
c. Substrate surface temperature - 50ºF minimum, and at least 10 deg F higher than dew point temperature
d. No dust generation

C. Contractor shall provide ventilation and isolation of each structure to be coated. Contractor shall provide all means necessary to exhaust noxious gases and odors, which may be present during the work.

3.3 PREPARATION

A. Comply with manufacturer's written instructions applicable to substrates and coating systems indicated.

B. Remove hardware, covers, plates, and similar items already in place that are removable and are not to be coated.

1. If removal is impractical or impossible because of size or weight of item, provide surface-applied protection before surface preparation and coating.
2. After completing coating operations, use workers skilled in the trades involved to reinstall items that were removed.
3. Remove surface-applied protection if any.

C. Clean substrates of substances that could impair bond of coatings, including dust, dirt, oil, grease, and incompatible paints and encapsulants.

1. Remove incompatible primers and reprime substrate with compatible primers or apply tie coat as required to produce coating systems indicated.
2. Remove release agents, curing compounds, efflorescence, and chalk. Do not coat surfaces if moisture content or alkalinity of surfaces to be coated exceeds that permitted in manufacturer's written instructions.

D. Surface Preparation of New or Repaired Concrete Substrates

1. Abrasive blast clean or hydro blast clean all new or repaired concrete surfaces to remove all degraded or loose concrete, and to produce a sound, clean substrate free of laitance, surface contaminants, loose materials, or otherwise deleterious substances. Cleaning shall be in accordance with SSPC-SP-13/NACE.
2. Cleaning of new concrete surfaces must produce a minimum, uniform substrate anchor pattern or surface profile between CSP 6 and 7 in accordance with ICRI 310.2.
3. Cleaning of repaired concrete surfaces, after proper cure of resurfacing mortars, must produce a minimum, uniform substrate anchor pattern or surface profile between CSP 4 and 5 in accordance with ICRI 310.2.
4. Should cleaning not remove degraded or loose concrete, chipping or other abrading tools shall be used to remove the deteriorated concrete until a sound, clean substrate is achieved which is free of calcium sulfate, loose coarse or fine aggregate, laitance, loose hydrated cement paste, and otherwise deleterious substances. Abrasive blast cleaning and any other means necessary shall be used to open up all air voids or "bugholes" to expose their complete perimeter and depth. Leaving shelled over, hidden air voids beneath the exposed concrete surface will not be acceptable. Concrete substrate shall be dry prior to the application of any surface filler or coating materials.
5. All new concrete to be coated shall have achieved a minimum of 28 days of cure time prior to coating application.
6. New concrete surfaces shall not have been cured using curing compounds, but rather will have been wet cured.
7. Acceptable surface preparation must produce a concrete surface pH of 9.0 to 11.5 to be confirmed by surface pH testing as specified under Article 3.5.
8. Following inspection of the concrete surface preparation by the Contractor and Independent Inspector, and acceptance by the Engineer, thoroughly vacuum clean all concrete surfaces to be coated to remove all loose dust, dirt, and spent abrasive leaving a dust free, sound concrete substrate. All debris produced by blast cleaning shall be

removed from the structures to be coated and disposed of by the Contractor at an approved location in accordance with all applicable local, state, and federal regulations. Inspect again and if specified conditions are met, the Engineer will accept the substrate prior to commencement of coating installation. Blow down cleaning with compressed air will not be acceptable.

E. Surface Preparation of Bare and Coated Metal Substrates Onto Which Lining System Will Terminate

1. The approved coating system for concrete will terminate onto metal substrates at various transitions, embedments and penetrations. Abrasive blast clean all such surfaces to remove all dirt corrosion products, and other substances that would prevent the specified coating adhesion from being achieved. All ferrous metal surfaces (not ductile iron) shall be blast cleaned to a Near White Blast in accordance with SSPC-SP-10. All metal surfaces shall be cleaned to produce a minimum surface profile of 4.0 mils which is uniform.
2. Post Blast Cleaning: Once abrasive blast cleaning has been accepted, proceed as follows:

    a. Remove all traces of grit, dust, dirt, rust scale, friable material, loose corrosion products or embedded abrasives from substrate by vacuum cleaning prior to coating system application.
    b. Prevent contamination of the concrete or metal surfaces after blasting from workers' fingerprints, deleterious substances on workers' clothing, or from atmospheric conditions. If, after cleaning, contamination occurs, reblast and reclean to achieve specified substrate cleanliness. Care must be taken to hold the specified degree of cleanliness on metal surfaces to prevent rust bloom prior to proceeding with application of the coating materials.

3.4 APPLICATION

A. Apply high-performance coatings in accordance with manufacturer's written instructions.

1. Use applicators and techniques suited for coating and substrate indicated.
2. Coat surfaces behind movable equipment and furniture same as similar exposed surfaces. Before final installation, coat surfaces behind permanently fixed equipment or furniture with prime coat only.
3. Coat backsides of access panels, removable or hinged covers, and similar hinged items to match exposed surfaces.
4. Do not apply coatings over labels of independent testing agencies or equipment name, identification, performance rating, or nomenclature plates.

B. Tint each undercoat a lighter shade to facilitate identification of each coat if multiple coats of the same material are to be applied. Tint undercoats to match color of finish coat but provide sufficient difference in shade of undercoats to distinguish each separate coat.

C. If undercoats or other conditions show through final coat, apply additional coats until cured film has a uniform coating finish, color, and appearance.

D. Apply coatings to produce surface films without cloudiness, spotting, holidays, laps, brush marks, runs, sags, ropiness, or other surface imperfections. Produce sharp glass lines and color breaks.

E. Film Thickness: Apply paint in wet film thickness (WFT) recommended by high-performance manufacturer to achieve specified dry film thickness (DFT) for each coat of paint. Since DFT varies among manufacturers, this reference is not included in Article "Collection Systems Coating Schedule."

3.5 FIELD QUALITY CONTROL INSPECTION AND TESTING

A. Manufacturer's Field Services: Manufacturer's representative shall provide technical assistance and guidance for surface preparation and application of coating systems. Manufacturer's representative shall hold point inspections to review surface preparation prior to application of coating.

B. Contractor or Contractor's representative shall perform the procedures listed below in conjunction with the requirements of this Section and prepare daily inspection reports documenting all required Q.C. inspection and test findings. The inspector will inspect the work to determine conformance to the contract documents.

C. Inspect and record substrate profile (anchor pattern) requirements visual inspection and comparison to ICRI 310.2 CSP Replicas for concrete substrates. Perform profile comparison for concrete once for every 100 sq. ft. of surface area to be lined.

D. Measure and record ambient air temperature once every two hours of each shift using a thermometer and measure and record substrate temperature once every two hours using a surface thermometer.

E. Measure and record relative humidity every two hours of each shift using a sling psychrometer in accordance with ASTM E337.

F. Check for the presence of substrate moisture in the concrete by performing the Standard Test method for Indicating Moisture in Concrete by the Plastic Sheet Method in accordance with ASTM D4263. If the presence of moisture is indicated, take measures to force dry the concrete substrate prior to commencing with coating system application. Force drying can be accomplished using indirect heaters and fans. If the source of substrate moisture cannot be eliminated by force drying, the Contractor shall consult with the Engineer. Perform this test once for every 200 sq. ft. of area to be coated and more frequently at darkened concrete areas.

G. Confirm correct mixing of coating materials as specified herein.

H. Inspect and record that the "pot life" of coating materials is not exceeded during installation.

I. Provide and record adhesion of the coating materials in accordance with ASTM D7234. Testing shall be performed at one location for every 200 sq. ft. of surface area to be coated. Use the following procedure:

1. Clean the coating surface to remove all oil, dirt, dust or other contaminants.

2. Cut through the coating material into the substrate using a circular core drill in accordance with the pertinent standard requirements.
3. Mix and apply rapid setting two component epoxy adhesive onto the abrasive blast cleaned disk or load fixture. Install the disk or load fixture firmly over the cut out circular area and hold in place using tape or other means to secure it until adhesive has cured.
4. Remove the disk or load fixture with the Pull Off Testing instrument, strictly following the instrument manufacturer's instructions.
5. Read or calculate the adhesive tensile pull value and record in pounds per square inch (psi). The adhesive tensile pull value must exceed 300 psi and must remove concrete over 90% of the load fixture surface that is attached to the underside of the disk or load fixture. If it does not, two additional adhesion tests will be performed in the same 200 sq. ft. area. If the requirements set forth above are still not met, the coating installation in this area will be deemed unacceptable and shall be removed and reinstalled immediately until acceptable adhesion is achieved (at no additional cost to the Owner). All test locations are to be repaired by the Contractor to achieve a pinhole free coating directly following acceptable results at no additional cost to the Owner.

J. Measure and record the thickness of the coating system using the following methods:

1. Use notched gauge in accordance with ASTM D4414 for Wet Film Thickness at least once every 50 sq. ft. of coating area. (For metal and resurfaced concrete substrates.)
2. Following cure, the coating shall be tested for dry film thickness once for every 500 sq. ft. of surface area using a Positector 100 DFT Gauge calibrated in accordance with the instrument manufacturer's instructions. Any areas found to be below minimum coat DFT as recommended by manufacturer above filled bugholes and above the prepared substrate profile shall receive an additional application of the coating or shall be removed/recoated as required to meet the total DFT requirement at no additional cost to the Owner. Additional thickness may be problematic in areas where mechanical moving equipment tolerances are critical. At such locations, coating removal and reapplication to the specified film thickness may be required, at no additional cost to the Owner.

K. All coating surfaces shall be visually inspected for areas showing poor adhesion, air inclusion, edges or seam defects or any other defects in the coating preventing a complete seal of the surfaces to be protected. Any and all deficiencies or defective work (not in compliance with this Section or related Sections) will be marked by the inspector for repairs or removal/replacement by the Contractor at no additional cost to the Owner.

L. Holiday and Pinhole Testing

1. Location of holidays and pinholes in the coating shall be performed in the field using spark testing. Upon completion of the coating installation, thoroughly dry and clean the surface of the coating and conduct visual inspection and holiday testing. All areas of the coating failing to meet the field test shall be repaired and retested. The spark testing shall be done with a Tinker & Rasor Holiday Detector (Model AP-W). This testing must be performed in accordance with ASTM D4787, using the revised procedure that follows:
2. Trial Holiday Detection-Drill a 1/16 inch diameter hole through the coating into the concrete 100 feet away from the ground connection. Follow ASTM D4787 Section 12 for adjusting the voltage setting for the 1/8 inch thick lining. Generally, the setting should total 100 volts per mil of thickness. Adjust the voltage +/- 5% to the established setting and pass the electrode over the known holiday to ensure detection at this distance

from ground and at the recommended voltage setting. If detected, proceed by moving the electrode over the coating surface slowly (approximately 1/2 to 1 foot per second) and mark holiday for repair as they are detected. If the known holiday is not detected, proceed as follows:

a. Check cleanliness (shiny metal clean) of ground connection and repeat detection of known holiday.
b. Check battery power charge for instrument.
c. Try a new ground location and repeat detection of known holiday.
d. Gradually increase the instrument voltage until the known holiday can be detected and check the coating thickness at this location. The rule for voltage settings is 100 volts per mil of coating thickness.
e. The voltage setting should follow the rule of 100 volts per mil of coating thickness.

3. Marking of Holidays

a. Holidays are to be marked on the coating using felt tipped pens or other markers approved by the coating material manufacturer. Holidays are to be repaired in strict accordance with the lining manufacturer's recommendation, at no additional cost to the Owner. Holiday detection is to be repeated only over the coating repair locations.

M. Final Inspection

1. Perform a final inspection to determine whether coating work meets the requirements of the specifications. This work shall be performed by the Engineer, the Independent Inspector and the Contractor.
2. Mark any rework required on any pinholes, holidays or any other inadequacies in the quality of the coating work. Such areas shall be recleaned and repaired by the Contractor as specified herein at no additional cost to the Owner.

3.6 CLEANING AND PROTECTION

A. After completing coating application, clean spattered surfaces. Remove spattered coatings by washing, scraping, or other methods. Do not scratch or damage adjacent finished surfaces.

B. Protect work of other trades against damage from coating operation. Correct damage to work of other trades by cleaning, repairing, replacing, and recoating, as approved by Engineer, and leave in an undamaged condition.

C. At completion of construction activities of other trades, touch up and restore damaged or defaced coated surfaces.

3.7 COLLECTION SYSTEMS COATING SCHEDULE

A. Concrete Protection: Wetwell and Junction Chamber Coating System

1. Severe Exposure:

a. 100% Solids Epoxy System :

1) Prime Coat:

a) CAR: Carboguard 510 series.
b) PPG: Amerlock Sealer.
c) SWC: Corobond 100.
d) TNE: Series 66.

2) Topcoat: (MPI Gloss Level 5 or 6).

a) CAR: Plasite 5371.
b) PPG: Novaguard 890 GF.
c) SWC: Duraplate 6100.
d) TNE: Series 436.

B. Concrete Protection: Sewer Manholes (New or Existing)

1. Severe Exposure:

a. 100% Solids Epoxy System:
1) Raven 405 by Raven Lining Systems
2) Warren Environmental Epoxy Spray System
3) SprayWall by Sprayroq Inc.

END OF SECTION 099676.13

© 2023 CDM Smith
All Rights Reserved

This page intentionally left blank.

© 2023 CDM Smith
All Rights Reserved

SECTION 260010 - SUPPLEMENTAL REQUIREMENTS FOR ELECTRICAL

PART 1 - GENERAL

1.1 RELATED DOCUMENTS

A. Drawings and general provisions of the Contract, including General and Supplementary Conditions and Division 01 Specification Sections, apply to this Section.

1.2 SUMMARY

A. Section Includes:

1. Supplemental requirements generally applicable to the Work specified in Division 26. This Section is also referenced by related Work specified in other Divisions.

B. Related Requirements:

1. Division 03 “Concrete” for cast in place concrete work, including concrete encasements for electrical duct banks, equipment pads, and light pole bases.
2. Division 31 “Earthwork” for excavation and backfilling, including gravel or sand bedding for underground work.
3. Division 40 “Process Interconnections” for SCADA, instrumentation, and process control equipment.

1.3 REFERENCES

A. Abbreviations and Acronyms for Electrical Terms and Units of Measure:

1. 8P8C: An 8-position 8-contact modular jack.
2. A: Ampere, unit of electrical current.
3. AC or ac: Alternating current.
4. AFCI: Arc-fault circuit interrupter.
5. AIC: Ampere interrupting capacity.
6. AL, Al, or ALUM: Aluminum.
7. ASD: Adjustable-speed drive.
8. ATS: Automatic transfer switch.
9. AWG: American wire gauge; see ASTM B258.
10. BAS: Building automation system.
11. BIL: Basic impulse insulation level.
12. BIM: Building information modeling.
13. CAD: Computer-aided design or drafting.
14. CATV: Community antenna television.
15. CB: Circuit breaker.
16. cd: Candela, the SI fundamental unit of luminous intensity.
17. CO/ALR: Copper-aluminum, revised.
18. COPS: Critical operations power system.

19. CU or Cu: Copper.
20. CU-AL or AL-CU: Copper-aluminum.
21. dB: Decibel, a unitless logarithmic ratio of two electrical, acoustical, or optical power values.
22. dB(A-weighted) or dB(A): Decibel acoustical sound pressure level with A-weighting applied in accordance with IEC 61672-1.
23. dB(adjusted) or dBa: Decibel weighted absolute noise power with respect to 3.16 pW (minus 85 dBm).
24. dBm: Decibel absolute power with respect to 1 mW.
25. DC or dc: Direct current.
26. DCOA: Designated critical operations area.
27. DDC: Direct digital control (HVAC).
28. EGC: Equipment grounding conductor.
29. ELV: Extra-low voltage.
30. EMF: Electromotive force.
31. EMI: Electromagnetic interference.
32. EPM: Electrical preventive maintenance.
33. EPS: Emergency power supply.
34. EPSS: Emergency power supply system.
35. ESS: Energy storage system.
36. EV: Electric vehicle.
37. EVPE: Electric vehicle power export equipment.
38. EVSE: Electric vehicle supply equipment.
39. fc: Footcandle, an internationally recognized unit of illuminance equal to one lumen per square foot or 10.76 lx. The simplified conversion 1 fc = 10 lx in the Specifications is common practice and considered adequate precision for building construction activities. When there are conflicts, lux is the primary unit; footcandle is specified for convenience.
40. FLC: Full-load current.
41. ft: Foot.
42. ft-cd: Foot-candle, the antiquated U.S. Standard unit of illuminance, equal to one international candle measured at a distance of one foot, that was superseded in 1948 by the unit "footcandle" after the SI unit candela (cd) replaced the international candle; see "fc,"
43. GEC: Grounding electrode conductor.
44. GFCI: Ground-fault circuit interrupter.
45. GFPE: Ground-fault protection of equipment.
46. GND: Ground.
47. HACR: Heating, air conditioning, and refrigeration.
48. HDPE: High-density polyethylene.
49. HID: High-intensity discharge.
50. HP or hp: Horsepower.
51. HVAC: Heating, ventilating, and air conditioning.
52. Hz: Hertz.
53. IBT: Intersystem bonding termination.
54. inch: Inch. To avoid confusion, the abbreviation "in." is not used.
55. IP: Ingress protection rating (enclosures); Internet protocol (communications).
56. IR: Infrared.
57. IS: Intrinsically safe.
58. IT&R: Inspecting, testing, and repair.
59. ITE: Information technology equipment.
60. kAIC: Kiloampere interrupting capacity.

61. kcmil or MCM: One thousand circular mils.
62. kV: Kilovolt.
63. kVA: Kilovolt-ampere.
64. kVAr or kVAR: Kilovolt-ampere reactive.
65. kW: Kilowatt.
66. kWh: Kilowatt-hour.
67. LAN: Local area network.
68. lb: Pound (weight).
69. lbf: Pound (force).
70. LCD: Liquid-crystal display.
71. LCDI: Leakage-current detector-interrupter.
72. LED: Light-emitting diode.
73. Li-ion: Lithium-ion.
74. lm: Lumen, the SI derived unit of luminous flux.
75. LNG: Liquefied natural gas.
76. LP-Gas: Liquefied petroleum gas.
77. LRC: Locked-rotor current.
78. LV: Low voltage.
79. lx: Lux, the SI derived unit of illuminance equal to one lumen per square meter.
80. m: Meter.
81. MCC: Motor-control center.
82. MDC: Modular data center.
83. MG set: Motor-generator set.
84. MIDI: Musical instrument digital interface.
85. MLO: Main lugs only.
86. MV: Medium voltage.
87. MVA: Megavolt-ampere.
88. mW: Milliwatt.
89. MW: Megawatt.
90. MWh: Megawatt-hour.
91. NC: Normally closed.
92. Ni-Cd: Nickel-cadmium.
93. Ni-MH: Nickel-metal hydride.
94. NIU: Network interface unit.
95. NO: Normally open.
96. NPT: National (American) standard pipe taper.
97. OCPD: Overcurrent protective device.
98. ONT: Optical network terminal.
99. PC: Personal computer.
100. PCS: Power conversion system.
101. PCU: Power-conditioning unit.
102. PF or pf: Power factor.
103. PHEV: Plug-in hybrid electric vehicle.
104. PLC: Programmable logic controller.
105. PLFA: Power-limited fire alarm.
106. PoE: Power over Ethernet.
107. PV: Photovoltaic.
108. PVC: Polyvinyl chloride.
109. pW: Picowatt.
110. RFI: (electrical) Radio-frequency interference; (contract) Request for interpretation.
111. RMS or rms: Root-mean-square.

112. RPM or rpm: Revolutions per minute.
113. SCADA: Supervisory control and data acquisition.
114. SCR: Silicon-controlled rectifier.
115. SPD: Surge protective device.
116. sq.: Square.
117. SWD: Switching duty.
118. TCP/IP: Transmission control protocol/Internet protocol.
119. TEFC: Totally enclosed fan-cooled.
120. TR: Tamper resistant.
121. TVSS: Transient voltage surge suppressor.
122. UL: (standards) Underwriters Laboratories, Inc.; (product categories) UL, LLC.
123. UL CCN: UL Category Control Number.
124. UPS: Uninterruptible power supply.
125. USB: Universal serial bus.
126. UV: Ultraviolet.
127. V: Volt, unit of electromotive force.
128. V(ac): Volt, alternating current.
129. V(dc): Volt, direct current.
130. VA: Volt-ampere, unit of complex electrical power.
131. VAR: Volt-ampere reactive, unit of reactive electrical power.
132. VFC: Variable-frequency controller.
133. VFD: Variable-frequency drive. See VFC.
134. VOM: Volt-ohm-multimeter.
135. VPN: Virtual private network.
136. VRLA: Valve regulated lead acid; also called "sealed lead acid (SLA)" or "valve regulated sealed lead acid."
137. W: Watt, unit of real electrical power.
138. Wh: Watt-hour, unit of electrical energy usage.
139. WPT: Wireless power transfer.
140. WPTE: Wireless power transfer equipment.
141. WR: Weather resistant.

B. Abbreviations and Acronyms for Electrical Raceway Types:

1. EMT: Electrical metallic tubing.
2. EMT-A: Aluminum electrical metallic tubing.
3. EMT-S: Steel electrical metallic tubing.
4. EMT-SS: Stainless steel electrical metallic tubing.
5. ENT: Electrical nonmetallic tubing.
6. EPEC: Electrical HDPE underground conduit (thin wall).
7. EPEC-A: Type A electrical HDPE underground conduit.
8. EPEC-B: Type B electrical HDPE underground conduit.
9. ERMC: Electrical rigid metal conduit.
10. ERMC-A: Aluminum electrical rigid metal conduit.
11. ERMC-S: Steel electrical rigid metal conduit.
12. ERMC-S-G: Galvanized-steel electrical rigid metal conduit.
13. ERMC-S-PVC: PVC-coated-steel electrical rigid metal conduit.
14. ERMC-SS: Stainless steel electrical rigid metal conduit.
15. FMC: Flexible metal conduit.
16. FMC-A: Aluminum flexible metal conduit.
17. FMC-S: Steel flexible metal conduit.

18. FMT: Steel flexible metallic tubing.
19. FNMC: Flexible nonmetallic conduit. See "LFNC."
20. GRS: Galvanized rigid steel conduit. See ERMC-S-G.
21. HDPE: HDPE underground conduit (thick wall).
22. HDPE-40: Schedule 40 HDPE underground conduit.
23. HDPE-80: Schedule 80 HDPE underground conduit.
24. IMC: Steel electrical intermediate metal conduit.
25. LFMC: Liquidtight flexible metal conduit.
26. LFMC-A: Aluminum liquidtight flexible metal conduit.
27. LFMC-S: Steel liquidtight flexible metal conduit.
28. LFMC-SS: Stainless steel liquidtight flexible metal conduit.
29. LFNC: Liquidtight flexible nonmetallic conduit.
30. LFNC-A: Layered (Type A) liquidtight flexible nonmetallic conduit.
31. LFNC-B: Integral (Type B) liquidtight flexible nonmetallic conduit.
32. LFNC-C: Corrugated (Type C) liquidtight flexible nonmetallic conduit.
33. PVC: Rigid PVC conduit.
34. PVC-40: Schedule 40 rigid PVC conduit.
35. PVC-80: Schedule 80 rigid PVC Conduit.
36. PVC-A: Type A rigid PVC concrete-encased conduit.
37. PVC-EB: Type EB rigid PVC concrete-encased underground conduit.
38. RAC: Rigid aluminum conduit. See ERMC-A.
39. RGS: Rigid galvanized steel conduit. See ERMC-S-G.
40. RMC: Rigid metal conduit. See ERMC.
41. RTRC: Reinforced thermosetting resin conduit.
42. RTRC-AG: Low-halogen, aboveground reinforced thermosetting resin conduit.
43. RTRC-AG-HW: Heavy wall, low-halogen, aboveground reinforced thermosetting resin conduit.
44. RTRC-AG-SW: Standard wall, low-halogen, aboveground reinforced thermosetting resin conduit.
45. RTRC-AG-XW: Extra heavy wall, low-halogen, aboveground reinforced thermosetting resin conduit.
46. RTRC-BG: Low-halogen, belowground reinforced thermosetting resin conduit.

C. Abbreviations and Acronyms for Electrical Single-Conductor and Multiple-Conductor Cable Types:

1. AC: Armored cable.
2. CATV: Coaxial general-purpose cable.
3. CATVP: Coaxial plenum cable.
4. CATVR: Coaxial riser cable.
5. CI: Circuit integrity cable.
6. CL2: Class 2 cable.
7. CL2P: Class 2 plenum cable.
8. CL2R: Class 2 riser cable.
9. CL2X: Class 2 cable, limited use.
10. CL3: Class 3 cable.
11. CL3P: Class 3 plenum cable.
12. CL3R: Class 3 riser cable.
13. CL3X: Class 3 cable, limited use.
14. CM: Communications general-purpose cable.
15. CMG: Communications general-purpose cable.

16. CMP: Communications plenum cable.
17. CMR: Communications riser cable.
18. CMUC: Under-carpet communications wire and cable.
19. CMX: Communications cable, limited use.
20. DG: Distributed generation cable.
21. FC: Flat cable.
22. FCC: Flat conductor cable.
23. FPL: Power-limited fire-alarm cable.
24. FPLP: Power-limited fire-alarm plenum cable.
25. FPLR: Power-limited fire-alarm riser cable.
26. IGS: Integrated gas spacer cable.
27. ITC: Instrumentation tray cable.
28. ITC-ER: Instrumentation tray cable, exposed run.
29. MC: Metal-clad cable.
30. MC-HL: Metal-clad cable, hazardous location.
31. MI: Mineral-insulated, metal-sheathed cable.
32. MTW: (machine tool wiring) Moisture-, heat-, and oil-resistant thermoplastic cable.
33. MV: Medium-voltage cable.
34. NM: Nonmetallic sheathed cable.
35. NMC: Nonmetallic sheathed cable with corrosion-resistant nonmetallic jacket.
36. NMS: Nonmetallic sheathed cable with signaling, data, and communications conductors, plus power or control conductors.
37. NPLF: Non-power-limited fire-alarm circuit cable.
38. NPLFP: Non-power-limited fire-alarm circuit cable for environmental air spaces.
39. NPLFR: Non-power-limited fire-alarm circuit riser cable.
40. NUCC: Nonmetallic underground conduit with conductors.
41. OFC: Conductive optical fiber general-purpose cable.
42. OFCG: Conductive optical fiber general-purpose cable.
43. OFCP: Conductive optical fiber plenum cable.
44. OFCR: Conductive optical fiber riser cable.
45. OFN: Nonconductive optical fiber general-purpose cable.
46. OFNG: Nonconductive optical fiber general-purpose cable.
47. OFNP: Nonconductive optical fiber plenum cable.
48. OFNR: Nonconductive optical fiber riser cable.
49. P: Marine shipboard cable.
50. PLTC: Power-limited tray cable.
51. PLTC-ER: Power-limited tray cable, exposed run.
52. PV: Photovoltaic cable.
53. RHH: (high heat) Thermoset rubber, heat-resistant cable.
54. RHW: Thermoset rubber, moisture-resistant cable.
55. SA: Silicone rubber cable.
56. SE: Service-entrance cable.
57. SER: Service-entrance cable, round.
58. SEU: Service-entrance cable, flat.
59. SIS: Thermoset cable for switchboard and switchgear wiring.
60. TBS: Thermoplastic cable with outer braid.
61. TC: Tray cable.
62. TC-ER: Tray cable, exposed run.
63. TC-ER-HL: Tray cable, exposed run, hazardous location.
64. THW: Thermoplastic, heat- and moisture-resistant cable.
65. THHN: Thermoplastic, heat-resistant cable with nylon jacket outer sheath.

66. THHW: Thermoplastic, heat- and moisture-resistant cable.
67. THWN: Thermoplastic, moisture- and heat-resistant cable with nylon jacket outer sheath.
68. TW: Thermoplastic, moisture-resistant cable.
69. UF: Underground feeder and branch-circuit cable.
70. USE: Underground service-entrance cable.
71. XHH: Cross-linked polyethylene, heat-resistant cable.
72. XHHW: Cross-linked polyethylene, heat- and moisture-resistant cable.

D. Definitions:

1. 8-Position 8-Contact (8P8C) Modular Jack: An unkeyed jack with up to eight contacts commonly used to terminate twisted-pair and multiconductor Ethernet cable. Also called a "TIA-1096 miniature 8-position series jack" (8PSJ), or an "IEC 8877 8-pole jack."

    a. Be careful when suppliers use "RJ45" generically. Obsolete RJ45 jacks used for analog telephone cables have rejection keys. 8P8C jacks used for digital telephone cables and Ethernet cables do not have rejection keys.

2. Basic Impulse Insulation Level (BIL): Reference insulation level expressed in impulse crest voltage with a standard wave not longer than 1.5 times 50 microseconds and 1.5 times 40 microseconds.
3. Cable: In accordance with NIST NBS Circular 37 and IEEE standards, in the United States for the purpose of interstate commerce, the definition of "cable" is (1) a conductor with insulation, or a stranded conductor with or without insulation (single-conductor cable); or (2) a combination of conductors insulated from one another (multiple-conductor cable).
4. Communications Jack: A fixed connecting device designed for insertion of a communications cable plug.
5. Communications Outlet: One or more communications jacks, or cables and plugs, mounted in a box or ring, with a suitable protective cover.
6. Conductor: In accordance with NIST NBS Circular 37 and IEEE standards, in the United States for the purpose of interstate commerce, the definition of "conductor" is (1) a wire or combination of wires not insulated from one another, suitable for carrying an electric current; (2) (National Electrical Safety Code) a material, usually in the form of wire, cable, or bar, suitable for carrying an electric current; or (3) (general) a substance or body that allows a current of electricity to pass continuously along it.
7. Designated Seismic System: A system component that requires design in accordance with Ch. 13 of ASCE/SEI 7 and for which the Component Importance Factor is greater than 1.0.
8. Direct Buried: Installed underground without encasement in concrete or other protective material.
9. Enclosure: The case or housing of an apparatus, or the fence or wall(s) surrounding an installation, to prevent personnel from accidentally contacting energized parts or to protect the equipment from physical damage. Types of enclosures and enclosure covers include the following:

    a. Cabinet: An enclosure that is designed for either surface mounting or flush mounting and is provided with a frame, mat, or trim in which a swinging door or doors are or can be hung.
    b. Concrete Box: A box intended for use in poured concrete.

c. Conduit Body: A means for providing access to the interior of a conduit or tubing system through one or more removable covers at a junction or terminal point. In the United States, conduit bodies are listed in accordance with outlet box requirements.
d. Conduit Box: A box having threaded openings or knockouts for conduit, EMT, or fittings.
e. Cutout Box: An enclosure designed for surface mounting that has swinging doors or covers secured directly to and telescoping with the walls of the enclosure.
f. Device Box: A box with provisions for mounting a wiring device directly to the box.
g. Extension Ring: A ring intended to extend the sides of an outlet box or device box to increase the box depth, volume, or both.
h. Floor Box: A box mounted in the floor intended for use with a floor box cover and other components to complete the floor box enclosure.
i. Floor-Mounted Enclosure: A floor box and floor box cover assembly with means to mount in the floor that is sealed against the entrance of scrub water at the floor level.
j. Floor Nozzle: An enclosure used on a wiring system, intended primarily as a housing for a receptacle, provided with a means, such as a collar, for surface-mounting on a floor, which may or may not include a stem to support it above the floor level, and is sealed against the entrance of scrub water at the floor level.
k. Junction Box: A box with a blank cover that joins different runs of raceway or cable and provides space for connection and branching of the enclosed conductors.
l. Outlet Box: A box that provides access to a wiring system having pryout openings, knockouts, threaded entries, or hubs in either the sides or the back, or both, for the entrance of conduit, conduit or cable fittings, or cables, with provisions for mounting an outlet box cover, but without provisions for mounting a wiring device directly to the box.
m. Pedestal Floor Box Cover: A floor box cover that, when installed as intended, provides a means for typically vertical or near-vertical mounting of receptacle outlets above the floor's finished surface.
n. Pull Box: A box with a blank cover that joins different runs of raceway and provides access for pulling or replacing the enclosed cables or conductors.
o. Raised-Floor Box: A floor box intended for use in raised floors.
p. Recessed Access Floor Box: A floor box with provisions for mounting wiring devices below the floor surface.
q. Recessed Access Floor Box Cover: A floor box cover with provisions for passage of cords to recessed wiring devices mounted within a recessed floor box.
r. Ring: A sleeve, which is not necessarily round, used for positioning a recessed wiring device flush with the plaster, concrete, drywall, or other wall surface.
s. Ring Cover: A box cover, with raised center portion to accommodate a specific wall or ceiling thickness, for mounting wiring devices or luminaires flush with the surface.
t. Termination Box: An enclosure designed for installation of termination base assemblies consisting of bus bars, terminal strips, or terminal blocks with provision for wire connectors to accommodate incoming or outgoing conductors, or both.

10. Emergency Systems: Those systems legally required and classed as emergency by municipal, state, federal, or other codes, or by any governmental agency having jurisdiction that are designed to ensure continuity of lighting, electrical power, or both, to

designated areas and equipment in the event of failure of the normal supply for safety to human life.

11. Fault Limited: Providing or being served by a source of electrical power that is limited to not more than 100 W when tested in accordance with UL 62368-1.

    a. The term "fault limited" is intended to encompass most Class 1, 2, and 3 power-limited sources complying with Article 725 of NFPA 70; Class ES1 and ES2 electrical energy sources that are Class PS1 electrical power sources (e.g., USB); and Class ES3 electrical energy sources that are Class PS1 and PS2 electrical power sources (e.g., PoE). See UL 62368-1 for discussion of classes of electrical energy sources and classes of electrical power sources.

12. Jacket: A continuous nonmetallic outer covering for conductors or cables.
13. Luminaire: A complete lighting unit consisting of a light source such as a lamp, together with the parts designed to position the light source and connect it to the power supply. It may also include parts to protect the light source or the ballast or to distribute the light.
14. Mode: The terms "Active Mode," "Off Mode," and "Standby Mode" are used as defined in the Energy Independence and Security Act (EISA) of 2007.
15. Multi-Outlet Assembly: A type of surface, flush, or freestanding raceway designed to hold conductors, receptacles, and switches, assembled in the field or at the factory.
16. Plenum: A compartment or chamber to which one or more air ducts are connected and that forms part of the air distribution system.
17. Receptacle: A fixed connecting device arranged for insertion of a power cord plug. Also called a power jack.
18. Receptacle Outlet: One or more receptacles mounted in a box with a suitable protective cover.
19. Sheath: A continuous metallic covering for conductors or cables.
20. UL Category Control Number (CCN): An alphabetic or alphanumeric code used to identify product categories covered by UL's Listing, Classification, and Recognition Services.
21. Voltage Class: For specified circuits and equipment, voltage classes are defined as follows:

    a. Control Voltage: Having electromotive force between any two conductors, or between a single conductor and ground, that is supplied from a battery or other Class 2 or Class 3 power-limited source.
    b. Line Voltage: (1) (controls) Designed to operate using the supplied low-voltage power without transformation. (2) (transmission lines, transformers, SPDs) The line-to-line voltage of the supplying power system.
    c. Extra-Low Voltage (ELV): Not having electromotive force between any two conductors, or between a single conductor and ground, exceeding 30 V(ac rms), 42 V(ac peak), or 60 V(dc).
    d. Low Voltage (LV): Having electromotive force between any two conductors, or between a single conductor and ground, that is rated above 30 V but not exceeding 1000 V.
    e. Medium Voltage (MV): Having electromotive force between any two conductors, or between a single conductor and ground, that is rated about 1 kV but not exceeding 69 kV.
    f. High Voltage: (1) (circuits) Having electromotive force between any two conductors, or between a single conductor and ground, that is rated above 69 kV

but not exceeding 230 kV. (2) (safety) Having sufficient electromotive force to inflict bodily harm or injury.

22. Wire: In accordance with NIST NBS Circular 37 and IEEE standards, in the United States for the purpose of interstate commerce, the definition of "wire" is a slender rod or filament of drawn metal. A group of small wires used as a single wire is properly called a "stranded wire." A wire or stranded wire covered with insulation is properly called an "insulated wire" or a "single-conductor cable." Nevertheless, when the context indicates that the wire is insulated, the term "wire" will be understood to include the insulation.

1.4 INTERPRETATION OF CONTRACT DOCUMENTS

A. If during performance of work, there is a conflict, error, or discrepancy between or among Contract Documents and laws and regulations, provide the higher performance standard unless otherwise directed by Engineer.

B. Priority of Documents: Figured dimensions govern over scaled dimensions, detailed drawings govern over general drawing, larger scale drawings take precedence over smaller scale drawings, change order drawings supersede original contract drawings, and contract drawings govern shop drawings.

C. In general, Drawings do not show conduit routing. Plan and route conduits in compliance with specifications and drawing details. Coordinate installation with other trades and actual supplied equipment.

D. Ductbank routing shown on electrical site plans is diagrammatic in nature and may not include interferences that may be present.

1.5 COORDINATION

A. Arrange to provide temporary electrical service or power in accordance with requirements specified in Division 01.

1.6 PREINSTALLATION MEETINGS

A. Schedule Preconstruction Meeting and other Preinstallation Meetings in accordance with Project Meetings Section in Division 01.

1.7 SEQUENCING

A. Conduct and submit results of preliminary power system studies before submitting Product Data and Shop Drawings for electrical equipment.

B. Coordinate installation work with other trades.

1.8 ACTION SUBMITTALS

A. Submit Division 26 equipment and materials as specified in each Section at one time and not piecemeal. For example, all low voltage motor control centers on a project are to be submitted under one submittal number. Submittals that do not comply will be returned disapproved.

B. Subject to Engineer's approval, related items may be submitted together under one submittal. Contractor shall identify the multiple Sections included. For example, multiple Sections specify lighting fixtures and poles. A single submittal for lighting could be acceptable.

C. Electrical Installation Drawings:

1. Drawings in general do not show conduit routing other than major conduit and ductbank routes. Submit conduit layouts for exposed, concealed, and buried conduits.
2. Submit electrical room layouts using approved shop drawing dimensions for equipment.
3. Submit layouts at an appropriate scale for clarity.
4. Include type written conduit schedules for easy cross check.
5. Installation submittal drawing must be approved before concrete pours are made that will conceal conduits.

D. Training Plans: Submit instructional program outline for Engineer's review and approval, where demonstration and/or training is specified.

1.9 INFORMATIONAL SUBMITTALS

A. Electrical Installation Schedule: At preconstruction meeting, and periodically thereafter as dates change, provide schedule for electrical installation Work to Owner and Engineer including, but not limited to, milestone dates for the following activities:

1. Submission of power system studies.
2. Submission of specified coordination drawings.
3. Submission of action submittals specified in Division 26.
4. Orders placed for major electrical equipment.
5. Arrival of major electrical equipment on-site.
6. Preinstallation meetings specified in Division 26.
7. Utility service outages.
8. Utility service inspection and activation.
9. Closing of walls and ceilings containing electrical Work.
10. System startup, testing, and commissioning activities for major electrical equipment.
11. System startup, testing, and commissioning activities for emergency lighting.
12. System startup, testing, and commissioning activities for automation systems (SCADA, lighting, etc.).
13. Pouring of concrete housekeeping pads for electrical equipment and testing of concrete samples.
14. Requests for special inspections.
15. Requests for inspections by authorities having jurisdiction.

B. Delegated Design Drawings: As indicated in individual Division 26 Sections.

C. Seismic Qualification Data: Individual Division 26 Sections.

D. Qualification Statements: In accordance with individual Division 26 Sections.

1.10 CLOSEOUT SUBMITTALS

A. Record Documents: Submit documentation to accurately show completed installation. Include modifications to Contract Documents (one line power diagrams, equipment elevations, panel schedules, elementary control diagrams, riser diagrams, plans, conduit and ductbank routing, etc.) along with additional drawings or sketches created to convey completed installation.

B. Operation and Maintenance Data:

1. Provide emergency operation, normal operation, and preventive maintenance manuals for each system, equipment, and device as specified in each Division 26 Section.

1.11 DELEGATED DESIGN / PROFESSIONAL ENGINEERING SERVICES

A. When engineering services are specified to be provided by Contractor, retain a licensed professional engineer to perform the services. Engineer shall be licensed at the time services are performed and licensed in the state in which project is located. If the state issues discipline specific licenses, Engineer shall be licensed in the applicable discipline. Engineer shall be experienced in the type of work being performed.

B. Engineering work shall be done according to the applicable regulations for professional engineers to include signing, sealing, and dating documents.

1.12 QUALIFICATIONS

A. Comply with Quality Assurance Articles within each Division 26 Section.

B. Electrical Contractor Minimum Requirements: Regularly engaged in the installation of industrial medium voltage systems for a minimum period of 10 years.

C. On Site Field Superintendent:

1. Minimum of 10 years of experience of industrial low and medium voltage projects of comparable size and complexity.
2. Be present (or designated substitute with minimum experience as above) during medium voltage cable pulling and testing, during medium voltage switching activity, and during medium voltage equipment change over or start-up activities.

1.13 MATERIALS AND EQUIPMENT

A. Provide new materials and equipment unless specifically noted otherwise.

B. NEMA enclosure types are listed on the Drawings and/or the specifications.

C. Electrical materials and equipment must be listed by Underwriter's Laboratories, Inc. (UL) and bear the appropriate listing or classification marking. Equipment not bearing a UL certification shall be field or factor UL certified prior to acceptance and use.

D. Provide major electrical equipment by a single manufacturer, i.e. unit substations, switchgear, motor control centers, disconnect switches, transformers, panelboards, etc.

1.14 HAZARDOUS AREAS

A. Drawings may indicate and define NEC hazardous classified locations.

B. Equipment and materials installed in hazardous areas shall be UL listed for the appropriate Class and Division and in accordance with NEC Articles 500, 501, 502, and 503 as applicable.

1.15 EQUIPMENT SIZE, HANDLING, AND STORAGE

A. Coordinate with equipment manufacturer shipping splits to permit safe handling and passage of equipment to final installation location.

B. Comply with manufacturer's instructions for upright equipment orientation during transportation.

C. Protect equipment from mechanical injury, or exposure to moisture, chemicals, or corrosive gases. Do not store indoor rated electrical equipment outdoors.

D. Provide and energize temporary space heaters if required to control moisture during storage.

1.16 SERVICE AND METERING

A. Electric power company serving Cedar Breaks LS is PEC. Electric power company serving D B Wood LS is Georgetown Electric. Comply with power company standards.

B. Pay fees and charges as required for temporary / construction power for Contractor's use.

C. Pay fees and charges as required for permanent service via a bid allowance and submit power company invoices to owner for substantiation.

D. Power Company Work:

1. Furnish conduit materials for underground service to utility transformer(s).
2. Provide primary conductors (overhead and underground) to utility transformer(s).
3. Provide utility transformer pad(s) and grounding.
4. Provide utility transformer(s).
5. Terminate underground primary cables at the utility transformer(s).
6. Terminate underground secondary cables at the utility transformer(s).
7. Provide metering current transformers (CT's), meter(s) and meter wiring.

E. Contractor Work:

1. Make arrangements with power company to obtain service, pay power company fees, and provide labor and materials required for electrical service.
2. Install primary underground conduits.
3. Provide secondary underground conduits and cable from utility transformer(s) to service entrance equipment.
4. Terminate secondary underground cables at the service entrance equipment.
5. Provide power company approved metering current transformer (CT) enclosure.
6. Install meter base enclosure.
7. Provide empty conduit with pull line from the metering CT enclosure to the meter base enclosure.

1.17 FIELD CONDITIONS

A. Service Conditions for Electrical Power Equipment: electrical power equipment must be suitable for operation under service conditions specified as usual service conditions in applicable NEMA PB series, IEEE C37 series, and IEEE C57 series standards.

1.18 ELECTRICAL SYSTEM TESTING AND SETTINGS

A. Test electrical systems and equipment in accordance with individual sections. This includes motors or other electrical equipment which are not specified in Division 26.

B. Set and adjust controls, timers, relays, adjustable trip units, protective devices, and other electrical components in accordance with manufacturers instructions and the approved power system study. Do not energize equipment without correctly setting adjustable components.

PART 2 - PRODUCTS (NOT USED)

PART 3 - EXECUTION

3.1 SLEEVES AND FORMS FOR OPENINGS

A. Provide and place sleeves for conduits and slots for electrical work prior to concrete pour.

B. Use approved shop drawings and equipment vendor templates to determine exact locations for stub-ups and terminating concealed conduit and place before floor slab pour.

C. Seal openings, sleeves, penetration, and slots in accordance with Section 260544 “Sleeves and Sleeve Seals for Electrical Raceways and Cabling.”

3.2 CUTTING AND PATCHING

A. Cut and patch in a workmanlike manner as required to install electrical work.

B. Modify concrete in accordance with Division 03 “Concrete.”

C. Do not cut joists, beams, girders, columns, or other structural members.

D. Patch surfaces to restore to original integrity (waterproof or fireproof as required) and appearance.

E. Core drill holes in concrete floors and walls as required. Prior to coring concrete, scan slab or wall using radar to locate and identify rebar and/or conduit and wiring. Locate cores to avoid cutting or drilling through rebar and/or conduits. Space conduits to not weaken structural integrity. Notify Engineer immediately if rebar is cut or upon becoming aware of discrepancies within area of work.

3.3 DEMOLITION AND DISPOSITION OF EQUIPMENT

A. Drawings showing removal of major mechanical and electrical equipment is not intended to show all components to be demolished. Not all piping, conduits, ducts, equipment, ancillary devices, etc. are shown. Field verify existing conditions prior to bid.

B. Unless otherwise specifically noted, remove unused exposed conduit and support systems back to source and/or point of concealment including above accessible ceiling finishes. Wiring shall be removed.

C. Cut flush with slab, ceiling, or wall abandoned concealed conduit. Suitably plug conduits.

D. Repair and restore adjacent construction and finishes after demolition is complete.

E. Material and equipment indicated for removal or demolition is to become the Contractor’s property upon removal, unless noted otherwise. Removed material to be properly handled and disposed.

3.4 INSTALLATION OF ELECTRICAL WORK

A. Unless more stringent requirements are specified in the Contract Documents or manufacturers’ written instructions, comply with NFPA 70 and NECA NEIS 1 for installation of Work specified in Division 26. Consult Engineer for resolution of conflicting requirements.

3.5 FIELD QUALITY CONTROL

A. Field testing, startup services, and system functional testing may be provided by the Contractor, and/or the manufacturer’s factory-authorized service representative, and/or an independent testing agency. Provide testing and/or startup service as specified in the relevant section.

B. Comply with Section 260800 “Commissioning of Electrical Systems”.

C. Submit Field Quality-Control Report as informational submittal within 14 days of each completed test or startup. Include within the report adjustments / as left settings.

3.6 CLEANING

A. Remove rubbish and debris from inside and around electrical equipment and enclosures.

B. Remove dirt, dust, or concrete spatter from interior and exterior of equipment using brushes, vacuum cleaner, or clean lint-free rags. Do not use compressed air.

3.7 CLOSEOUT ACTIVITIES

A. Provide demonstration and training as specified in each Section.

END OF SECTION 260010

© 2023 CDM Smith
All Rights Reserved

SECTION 260519 - LOW-VOLTAGE ELECTRICAL POWER CONDUCTORS AND CABLES

PART 1 - GENERAL

1.1 RELATED DOCUMENTS

A. Drawings and general provisions of the Contract, including General and Supplementary Conditions and Division 01 Specification Sections, apply to this Section.

1.2 SUMMARY

A. Section Includes:

1. Copper building wire rated 600 V or less.
2. Connectors, splices, and terminations rated 600 V and less.

B. Related Requirements:

1. Section 260523 "Control-Voltage Electrical Power Cables" for control systems communications cables and Classes 1, 2, and 3 control cables.

1.3 DEFINITIONS

A. RoHS: Restriction of Hazardous Substances.

B. VFC: Variable-frequency controller.

1.4 ACTION SUBMITTALS

A. Product Data: For each type of product.

B. Product Schedule: Indicate type, use, location, and termination locations.

1.5 INFORMATIONAL SUBMITTALS

A. Qualification Data: For testing agency.

B. Field quality-control reports.

1.6 QUALITY ASSURANCE

A. Testing Agency Qualifications: Member company of NETA.

1. Testing Agency's Field Supervisor: Certified by NETA to supervise on-site testing.

PART 2 - PRODUCTS

2.1 COPPER BUILDING WIRE

A. Description: Flexible, insulated, and uninsulated, drawn tinned copper current-carrying conductor with an overall insulation layer or jacket, or both, rated 600 V or less.

B. Manufacturers: Subject to compliance with requirements, available manufacturers offering products that may be incorporated into the Work include, but are not limited to the following:

1. General Cable; Prysmian Group North America.
2. Okonite Company (The).
3. Southwire Company, LLC.

C. Standards:

1. Listed and labeled as defined in NFPA 70, by a qualified testing agency, and marked for intended location and use.
2. RoHS compliant.
3. Conductor and Cable Marking: Comply with wire and cable marking according to UL's "Wire and Cable Marking and Application Guide."

D. Conductors: Copper, complying with ASTM B33 for bare annealed tinned copper and with ASTM B8 for stranded conductors.

E. Conductor Insulation:

1. Type USE-2 and Type SE: Comply with UL 854.
2. Type TC-ER: Comply with NEMA WC 70/ICEA S-95-658 and UL 1277.
3. Type XHHW-2: Comply with UL 44.

2.2 CONNECTORS AND SPLICES

A. Description: Factory-fabricated connectors, splices, and lugs of size, ampacity rating, material, type, and class for application and service indicated; listed and labeled as defined in NFPA 70, by a qualified testing agency, and marked for intended location and use.

B. Manufacturers: Subject to compliance with requirements, available manufacturers offering products that may be incorporated into the Work include, but are not limited to the following:

1. 3M Electrical Products.
2. O-Z/Gedney; brand of Emerson Electric Co., Automation Solutions, Appleton Group.
3. TE Connectivity Ltd.

C. Jacketed Cable Connectors: For steel and aluminum jacketed cables, zinc die-cast with set screws, designed to connect conductors specified in this Section.

D. Lugs: One piece, seamless, designed to terminate conductors specified in this Section.

1. Material: tinned Copper.

2. Type: Two hole with long barrels.
3. Termination: Compression.

PART 3 - EXECUTION

3.1 CONDUCTOR MATERIAL APPLICATIONS

A. Feeders: Copper; solid for No. 10 AWG and smaller; stranded for No. 8 AWG and larger.

B. Branch Circuits: Copper. Solid for No. 10 AWG and smaller; stranded for No. 8 AWG and larger.

C. VFC Output Circuits Cable: Extra-flexible stranded for all sizes.

D. Power-Limited Fire Alarm and Control: Solid for No. 12 AWG and smaller.

3.2 CONDUCTOR INSULATION AND MULTICONDUCTOR CABLE APPLICATIONS AND WIRING METHODS

A. Service Entrance: Type USE, single conductor in raceway.

B. Exposed Feeders: Type XHHW-2, single conductors in raceway.

C. Feeders Concealed in Ceilings, Walls, Partitions, and Crawlspaces: Type XHHW-2, single or multi-conductors in raceway.

D. Feeders Concealed in Concrete, below Slabs-on-Grade, and Underground: Type XHHW-2, single or multi-conductors in raceway.

E. Feeders Installed below Raised Flooring: Type XHHW-2, single conductors in raceway.

F. Feeders in Cable Tray: Type XHHW-2, single conductors larger than No. 1/0 AWG.

G. Branch Circuits Concealed in Ceilings, Walls, and Partitions: Type XHHW-2, single conductors in raceway.

H. Branch Circuits Concealed in Concrete, below Slabs-on-Grade, and Underground: Type XHHW-2, single conductors in raceway.

I. Branch Circuits in Cable Tray: Type XHHW-2, single conductors larger than No. 1/0 AWG.

J. Cord Drops and Portable Appliance Connections: Type SO, hard service cord with stainless-steel, wire-mesh, strain relief device at terminations to suit application.

K. VFC Output Circuits: Type XHHW-2 in metal conduit.

3.3 INSTALLATION OF CONDUCTORS AND CABLES

A. Conceal cables in finished walls, ceilings, and floors unless otherwise indicated.

B. Complete raceway installation between conductor and cable termination points according to Section 260533 "Raceways and Boxes for Electrical Systems" prior to pulling conductors and cables.

C. Use manufacturer-approved pulling compound or lubricant where necessary; compound used must not deteriorate conductor or insulation. Do not exceed manufacturer's recommended maximum pulling tensions and sidewall pressure values.

D. Use pulling means, including fish tape, cable, rope, and basket-weave wire/cable grips, that will not damage cables or raceway.

E. Install exposed cables parallel and perpendicular to surfaces of exposed structural members, and follow surface contours where possible.

F. Support cables according to Section 260529 "Hangers and Supports for Electrical Systems."

3.4 CONNECTIONS

A. Tighten electrical connectors and terminals according to manufacturer's published torque-tightening values. If manufacturer's torque values are not indicated, use those specified in UL 486A-486B.

B. Make splices, terminations, and taps that are compatible with conductor material and that possess equivalent or better mechanical strength and insulation ratings than unspliced conductors.

C. Wiring at Outlets: Install conductor at each outlet, with at least of slack.

3.5 IDENTIFICATION

A. Identify and color-code conductors and cables according to Section 260553 "Identification for Electrical Systems."

B. Identify each spare conductor at each end with identity number and location of other end of conductor, and identify as spare conductor.

3.6 SLEEVE AND SLEEVE-SEAL INSTALLATION FOR ELECTRICAL PENETRATIONS

A. Install sleeves and sleeve seals at penetrations of exterior floor and wall assemblies. Comply with requirements in Section 260544 "Sleeves and Sleeve Seals for Electrical Raceways and Cabling."

3.7 FIELD QUALITY CONTROL

A. Testing Agency: Engage a qualified testing agency to perform tests and inspections.

B. Manufacturer's Field Service: Engage a factory-authorized service representative to test and inspect components, assemblies, and equipment installations, including connections.

C. Perform tests and inspections.

1. After installing conductors and cables and before electrical circuitry has been energized, test service entrance and feeder conductors for compliance with requirements.
2. After installing conductors and cables and before electrical circuitry has been energized, test service entrance and feeder conductors and conductors feeding the following critical equipment and services for compliance with requirements:
3. Perform each of the following visual and electrical tests:

    a. Inspect exposed sections of conductor and cable for physical damage and correct connection according to the single-line diagram.
    b. Test bolted connections for high resistance using one of the following:

        1) A low-resistance ohmmeter.
        2) Calibrated torque wrench.
        3) Thermographic survey.

    c. Inspect compression-applied connectors for correct cable match and indentation.
    d. Inspect for correct identification.
    e. Inspect cable jacket and condition.
    f. Insulation-resistance test on each conductor for ground and adjacent conductors. Apply a potential of 500-V dc for 300-V rated cable and 1000-V dc for 600-V rated cable for a one-minute duration.
    g. Continuity test on each conductor and cable.
    h. Uniform resistance of parallel conductors.

4. Initial Infrared Scanning: After Substantial Completion, but before Final Acceptance, perform an infrared scan of each splice in conductors No. 3 AWG and larger. Remove box and equipment covers so splices are accessible to portable scanner. Correct deficiencies determined during the scan.

    a. Instrument: Use an infrared scanning device designed to measure temperature or to detect significant deviations from normal values. Provide calibration record for device.
    b. Record of Infrared Scanning: Prepare a certified report that identifies switches checked and that describes scanning results. Include notation of deficiencies detected, remedial action taken, and observations after remedial action.

5. Follow-up Infrared Scanning: Perform an additional follow-up infrared scan of each switch 11 months after date of Substantial Completion.

D. Cables will be considered defective if they do not pass tests and inspections.

E. Prepare test and inspection reports to record the following:

1. Procedures used.
2. Results that comply with requirements.
3. Results that do not comply with requirements, and corrective action taken to achieve compliance with requirements.

END OF SECTION 260519

© 2023 CDM Smith
All Rights Reserved

SECTION 260523 - CONTROL-VOLTAGE ELECTRICAL POWER CABLES

PART 1 - GENERAL

1.1 RELATED DOCUMENTS

A. Drawings and general provisions of the Contract, including General and Supplementary Conditions and Division 01 Specification Sections, apply to this Section.

1.2 SUMMARY

A. Section Includes:

1. Low-voltage control cabling.
2. Control-circuit conductors.
3. Instrumentation cables.

1.3 DEFINITIONS

A. EMI: Electromagnetic interference.

B. Low Voltage: As defined in NFPA 70 for circuits and equipment operating at less than 50 V or for remote-control and signaling power-limited circuits.

C. Plenum: A space forming part of the air distribution system to which one or more air ducts are connected. An air duct is a passageway, other than a plenum, for transporting air to or from heating, ventilating, or air-conditioning equipment.

D. RCDD: Registered Communications Distribution Designer.

1.4 ACTION SUBMITTALS

A. Product Data: For each type of product.

1.5 INFORMATIONAL SUBMITTALS

A. Qualification Data: For testing agency, RCDD, layout technician, installation supervisor, and field inspector.

B. Source quality-control reports.

C. Field quality-control reports.

1.6 QUALITY ASSURANCE

A. Testing Agency Qualifications: Accredited by NETA.

1. Testing Agency's Field Supervisor: Currently certified by BICSI as an RCDD to supervise on-site testing.

PART 2 - PRODUCTS

2.1 PERFORMANCE REQUIREMENTS

A. Electrical Components, Devices, and Accessories: Listed and labeled as defined in NFPA 70, by a qualified testing agency, and marked for intended location and application.

B. Flame Travel and Smoke Density in Plenums: As determined by testing identical products according to NFPA 262, by a qualified testing agency. Identify products for installation in plenums with appropriate markings of applicable testing agency.

1. Flame Travel Distance: 60 inches or less.
2. Peak Optical Smoke Density: 0.5 or less.
3. Average Optical Smoke Density: 0.15 or less.

C. Flame Travel and Smoke Density for Riser Cables in Non-Plenum Building Spaces: As determined by testing identical products according to UL 1666.

D. Flame Travel and Smoke Density for Cables in Non-Riser Applications and Non-Plenum Building Spaces: As determined by testing identical products according to UL 1685.

E. RoHS compliant.

2.2 CONTROL-CIRCUIT CONDUCTORS

A. Manufacturers: Subject to compliance with requirements, available manufacturers offering products that may be incorporated into the Work include, but are not limited to the following:

1. General Cable; Prysmian Group North America.
2. Okonite Company (The).
3. Southwire Company, LLC.

B. Class 1 Control Circuits: tinned Stranded copper, Type XHHW-2, complying with UL 44 in raceway.

C. Class 2 Control Circuits: tinned Stranded copper, Type XHHW-2, complying with UL 44 in raceway.

D. Class 3 Remote-Control and Signal Circuits: tinned Stranded copper, Type XHHW-2, complying with UL 44 in raceway.

E. Class 2 Control Circuits and Class 3 Remote-Control and Signal Circuits That Supply Critical Circuits: Circuit Integrity (CI) cable.

1. Smoke control signaling and control circuits.

2.3 INSTRUMENTATION CABLE

A. Paired Cable:

1. One pair, No. 16AWG, tinned stranded and twisted on 2-in lay.
2. PVC insulation, 600V rating, 90 degrees C rating.
3. Shielded: 100 percent mylar tape with drain wire.
4. PVC jacket with UL subject 277, UL 1581 and manufacturer's identification.
5. Manufacturers: Belden, or equal.

B. Triad (three conductor) Cable:

1. One triad No. 16AWG, tinned stranded and twisted on 2-in lay.
2. PVC insulation, 600V rating, 90 degrees C rating.
3. Shielded: 100 percent mylar tape with drain wire.
4. PVC jacket with UL subject 277, UL 1581 and manufacturer's identification.
5. Manufacturers: Belden, or equal.

C. Multiple pair cables (where shown on Drawings)

1. Multiple, No. 16 AWG, tinned stranded and twisted on 2-in lay.
2. PVC insulation, 600V rating, 90 degrees C rating.
3. Shielded: 100 percent mylar tape with drain wire.
4. PVC jacket with UL subject 277, UL 1581 and manufacturer's identification.
5. Manufacturers: Belden, or equal.

2.4 SOURCE QUALITY CONTROL

A. Testing Agency: Engage a qualified testing agency to evaluate cables.

B. Factory test twisted pair cables according to TIA-568-C.2.

C. Cable will be considered defective if it does not pass tests and inspections.

D. Prepare test and inspection reports.

PART 3 - EXECUTION

3.1 EXAMINATION

A. Test cables on receipt at Project site.

1. Test each pair of twisted pair cable for open and short circuits.

3.2 INSTALLATION OF RACEWAYS AND BOXES

A. Comply with requirements in Section 260533 "Raceways and Boxes for Electrical Systems" for raceway selection and installation requirements for boxes, conduits, and wireways as supplemented or modified in this Section.

1. Outlet boxes shall be no smaller than 2 inches wide, 3 inches high, and 2-1/2 inches deep.
2. Outlet boxes for cables shall be no smaller than 4 inches square by 1-1/2 inches deep with extension ring sized to bring edge of ring to within 1/8 inch of the finished wall surface.
3. Flexible metal conduit shall not be used.

B. Comply with TIA-569-D for pull-box sizing and length of conduit and number of bends between pull points.

C. Install manufactured conduit sweeps and long-radius elbows if possible.

3.3 INSTALLATION OF CONDUCTORS AND CABLES

A. Comply with NECA 1.

B. General Requirements for Cabling:

1. Comply with TIA-568-C Series of standards.
2. Comply with BICSI ITSIMM, Ch. 5, "Copper Structured Cabling Systems."
3. Terminate all conductors; no cable shall contain unterminated elements. Make terminations only at indicated outlets, terminals, and cross-connect and patch panels.
4. Cables may not be spliced and shall be continuous from terminal to terminal. Do not splice cable between termination, tap, or junction points.
5. Cables serving a common system may be grouped in a common raceway. Install network cabling and control wiring and cable in separate raceway from power wiring. Do not group conductors from different systems or different voltages.
6. Secure and support cables at intervals not exceeding 30 inches and not more than 6 inches from cabinets, boxes, fittings, outlets, racks, frames, and terminals.
7. Bundle, lace, and train conductors to terminal points without exceeding manufacturer's limitations on bending radii, but not less than radii specified in BICSI ITSIMM, Ch. 5, "Copper Structured Cabling Systems." Install lacing bars and distribution spools.
8. Do not install bruised, kinked, scored, deformed, or abraded cable. Remove and discard cable if damaged during installation and replace it with new cable.
9. Cold-Weather Installation: Bring cable to room temperature before dereeling. Do not use heat lamps for heating.
10. Pulling Cable: Comply with BICSI ITSIMM, Ch. 5, "Copper Structured Cabling Systems." Monitor cable pull tensions.
11. Support: Do not allow cables to lie on removable ceiling tiles.
12. Secure: Fasten securely in place with hardware specifically designed and installed so as to not damage cables.
13. Provide strain relief.
14. Keep runs short. Allow extra length for connecting to terminals. Do not bend cables in a radius less than 10 times the cable OD. Use sleeves or grommets to protect cables from vibration at points where they pass around sharp corners and through penetrations.

15. Ground wire shall be copper, and grounding methods shall comply with IEEE C2. Demonstrate ground resistance.

C. Balanced Twisted Pair Cable Installation:

1. Comply with TIA-568-C.2.
2. Install termination hardware as specified in Section 271513 "Communications Copper Horizontal Cabling" unless otherwise indicated.
3. Do not untwist balanced twisted pair cables more than 1/2 inch at the point of termination to maintain cable geometry.

D. Installation of Control-Circuit Conductors:

1. Install wiring in raceways.
2. Use insulated spade lugs for wire and cable connection to screw terminals.
3. Comply with requirements specified in Section 260533 "Raceways and Boxes for Electrical Systems."

E. Open-Cable Installation:

1. Install cabling with horizontal and vertical cable guides in telecommunications spaces with terminating hardware and interconnection equipment.
2. Suspend copper cable not in a wireway or pathway a minimum of 8 inches above ceilings by cable supports not more than 30 inches apart.
3. Cable shall not be run through or on structural members or in contact with pipes, ducts, or other potentially damaging items. Do not run cables between structural members and corrugated panels.

F. Separation from EMI Sources:

1. Comply with BICSI TDMM and TIA-569-D recommendations for separating unshielded copper voice and data communications cable from potential EMI sources including electrical power lines and equipment.
2. Separation between open communications cables or cables in nonmetallic raceways and unshielded power conductors and electrical equipment shall be as follows:

    a. Electrical Equipment or Circuit Rating Less Than 2 kVA: A minimum of 5 inches.
    b. Electrical Equipment or Circuit Rating between 2 and 5 kVA: A minimum of 12 inches.
    c. Electrical Equipment or Circuit Rating More Than 5 kVA: A minimum of 24 inches.

3. Separation between communications cables in grounded metallic raceways and unshielded power lines or electrical equipment shall be as follows:

    a. Electrical Equipment or Circuit Rating Less Than 2 kVA: A minimum of 2-1/2 inches.
    b. Electrical Equipment or Circuit Rating between 2 and 5 kVA: A minimum of 6 inches.
    c. Electrical Equipment or Circuit Rating More Than 5 kVA: A minimum of 12 inches.

4. Separation between communications cables in grounded metallic raceways and power lines and electrical equipment located in grounded metallic conduits or enclosures shall be as follows:

    a. Electrical Equipment or Circuit Rating Less Than 2 kVA: No requirement.
    b. Electrical Equipment or Circuit Rating between 2 and 5 kVA: A minimum of 3 inches.
    c. Electrical Equipment or Circuit Rating More Than 5 kVA: A minimum of 6 inches.

5. Separation between Communications Cables and Electrical Motors and Transformers, 5 kVA or 5 HP and Larger: A minimum of 48 inches.
6. Separation between Communications Cables and Fluorescent Fixtures: A minimum of .

3.4 REMOVAL OF CONDUCTORS AND CABLES

A. Remove abandoned conductors and cables. Abandoned conductors and cables are those installed that are not terminated at equipment and are not identified with a tag for future use.

3.5 CONTROL-CIRCUIT CONDUCTORS

A. Minimum Conductor Sizes:

1. Class 1 remote-control and signal circuits; No 14 AWG.
2. Class 2 low-energy, remote-control, and signal circuits; No. 16 AWG.
3. Class 3 low-energy, remote-control, alarm, and signal circuits; No 12 AWG.

3.6 GROUNDING

A. For data communication wiring, comply with TIA-607-B and with BICSI TDMM, "Bonding and Grounding (Earthing)" Chapter.

B. For low-voltage control wiring and cabling, comply with requirements in Section 260526 "Grounding and Bonding for Electrical Systems."

3.7 IDENTIFICATION

A. Comply with requirements for identification specified in Section 260553 "Identification for Electrical Systems."

B. Identify data and communications system components, wiring, and cabling according to TIA-606-B; label printers shall use label stocks, laminating adhesives, and inks complying with UL 969.

C. Identify each wire on each end and at each terminal with a number-coded identification tag. Each wire shall have a unique tag.

3.8 FIELD QUALITY CONTROL

A. Testing Agency: Engage a qualified testing agency to perform tests and inspections.

B. Manufacturer's Field Service: Engage a factory-authorized service representative to test and inspect components, assemblies, and equipment installations, including connections.

C. Perform tests and inspections.

D. Tests and Inspections:

1. Visually inspect cable jacket materials for UL or third-party certification markings. Inspect cabling terminations to confirm color-coding for pin assignments, and inspect cabling connections to confirm compliance with TIA-568-C.1.
2. Visually inspect cable placement, cable termination, grounding and bonding, equipment and patch cords, and labeling of all components.
3. Test cabling for direct-current loop resistance, shorts, opens, intermittent faults, and polarity between conductors. Test operation of shorting bars in connection blocks. Test cables after termination, but not after cross-connection.

    a. Test instruments shall meet or exceed applicable requirements in TIA-568-C.2. Perform tests with a tester that complies with performance requirements in its "Test Instruments (Normative)" Annex, complying with measurement accuracy specified in its "Measurement Accuracy (Informative)" Annex. Use only test cords and adapters that are qualified by test equipment manufacturer for channel or link test configuration.

E. Document data for each measurement. Print data for submittals in a summary report that is formatted using Table 10.1 in BICSI TDMM as a guide, or transfer the data from the instrument to the computer, save as text files, print, and submit.

F. End-to-end cabling will be considered defective if it does not pass tests and inspections.

G. Prepare test and inspection reports.

END OF SECTION 260523

© 2023 CDM Smith
All Rights Reserved

This page intentionally left blank.

© 2023 CDM Smith
All Rights Reserved

SECTION 260526 - GROUNDING AND BONDING FOR ELECTRICAL SYSTEMS

PART 1 - GENERAL

1.1 RELATED DOCUMENTS

A. Drawings and general provisions of the Contract, including General and Supplementary Conditions and Division 01 Specification Sections, apply to this Section.

1.2 SUMMARY

A. Section includes grounding and bonding systems and equipment.

B. Section includes grounding and bonding systems and equipment, plus the following special applications:

1. Underground distribution grounding.
2. Ground bonding common with lightning protection system.
3. Foundation steel electrodes.

1.3 ACTION SUBMITTALS

A. Product Data: For each type of product indicated.

1.4 INFORMATIONAL SUBMITTALS

A. Qualification Data: For testing agency and testing agency's field supervisor.

B. Field quality-control reports.

1.5 CLOSEOUT SUBMITTALS

A. Operation and Maintenance Data: For grounding to include in emergency, operation, and maintenance manuals.

1. In addition to items specified in Section 017823 "Operation and Maintenance Data," include the following:

a. Plans showing as-built, dimensioned locations of system described in "Field Quality Control" Article, including the following:

1) Test wells.
2) Ground rods.
3) Ground rings.
4) Grounding arrangements and connections for separately derived systems.

b. Instructions for periodic testing and inspection of grounding features at test wells ground rings grounding connections for separately derived systems based on NETA MTS.

1) Tests shall determine if ground-resistance or impedance values remain within specified maximums, and instructions shall recommend corrective action if values do not.
2) Include recommended testing intervals.

1.6 QUALITY ASSURANCE

A. Testing Agency Qualifications: Certified by NETA.

PART 2 - PRODUCTS

2.1 SYSTEM DESCRIPTION

A. Electrical Components, Devices, and Accessories: Listed and labeled as defined in NFPA 70, by a qualified testing agency, and marked for intended location and application.

B. Comply with UL 467 for grounding and bonding materials and equipment.

2.2 CONDUCTORS

A. Insulated Conductors: tinned Copper wire or cable insulated for 600 V unless otherwise required by applicable Code or authorities having jurisdiction.

B. Bare Copper Conductors:

1. Solid Conductors: ASTM B3.
2. Stranded Conductors: ASTM B8.
3. Tinned Conductors: ASTM B33.
4. Bonding Cable: 28 kcmil, 14 strands of No. 17 AWG conductor, 1/4 inch in diameter.
5. Bonding Conductor: No. 4 or No. 6 AWG, stranded conductor.
6. Bonding Jumper: Copper tape, braided conductors terminated with copper ferrules; 1-5/8 inches wide and 1/16 inch thick.
7. Tinned Bonding Jumper: Tinned-copper tape, braided conductors terminated with copper ferrules; 1-5/8 inches wide and 1/16 inch thick.

2.3 CONNECTORS

A. Listed and labeled by an NRTL acceptable to authorities having jurisdiction for applications in which used and for specific types, sizes, and combinations of conductors and other items connected.

B. Welded Connectors: Exothermic-welding kits of types recommended by kit manufacturer for materials being joined and installation conditions.

C. Bus-Bar Connectors: Mechanical type, cast silicon bronze, solderless compression-type wire terminals, and long-barrel, two-bolt connection to ground bus bar.

D. Bus-Bar Connectors: Compression type, copper or copper alloy, with two wire terminals.

E. Beam Clamps: Mechanical type, terminal, ground wire access from four directions, with dual, tin-plated or silicon bronze bolts.

F. Cable-to-Cable Connectors: Compression type, copper or copper alloy.

G. Cable Tray Ground Clamp: Mechanical type, zinc-plated malleable iron.

H. Conduit Hubs: Mechanical type, terminal with threaded hub.

I. Ground Rod Clamps: Mechanical type, copper or copper alloy, terminal with hex head bolt.

J. Lay-in Lug Connector: Mechanical type, copper rated for direct burial terminal with set screw.

K. Service Post Connectors: Mechanical type, bronze alloy terminal, in short- and long-stud lengths, capable of single and double conductor connections.

L. Signal Reference Grid Clamp: Mechanical type, stamped-steel terminal with hex head screw.

M. Straps: Solid copper, copper lugs. Rated for 600 A.

N. Tower Ground Clamps: Mechanical type, copper or copper alloy, terminal two-piece clamp.

O. U-Bolt Clamps: Mechanical type, copper or copper alloy, terminal listed for direct burial.

2.4 GROUNDING ELECTRODES

A. Ground Rods: Copper-clad steel; 3/4 inch by 10 feet.

B. Ground Plates: 1/4 inch thick, hot-dip galvanized.

2.5 EXOTHERMIC WELDING

A. Exothermic welding shall be by CADWELD process, or equal. Molds and powder shall be furnished by the same manufacturer and sized and selected per manufacturer's instructions for specific combination of conductors and connected items.

B. Welds used indoors in occupied buildings or confined spaces shall be the low emission type, CADWELD EXOLON or equal.

PART 3 - EXECUTION

3.1 APPLICATIONS

A. Conductors: Install solid conductor for No. 10 AWG and smaller, and stranded conductors for No. 8 AWG and larger unless otherwise indicated.

B. Underground Grounding Conductors: Install bare tinned-copper conductor, No. 4/0 AWG minimum.

1. Bury at least 30 inches below grade.
2. Duct-Bank Grounding Conductor: Bury 12 inches above duct bank when indicated as part of duct-bank installation.

C. Grounding Conductors: Green-colored insulation with continuous yellow stripe.

D. Isolated Grounding Conductors: Green-colored insulation with continuous yellow stripe. On feeders with isolated ground, identify grounding conductor where visible to normal inspection, with alternating bands of green and yellow tape, with at least three bands of green and two bands of yellow.

E. Grounding Bus: Install in electrical equipment rooms, in rooms housing service equipment, and elsewhere as indicated.

1. Install bus horizontally, on insulated spacers 2 inches minimum from wall, 6 inches above finished floor unless otherwise indicated.
2. Where indicated on both sides of doorways, route bus up to top of door frame, across top of doorway, and down; connect to horizontal bus.

F. Conductor Terminations and Connections:

1. Pipe and Equipment Grounding Conductor Terminations: Bolted connectors.
2. Underground Connections: Welded connectors except at test wells and as otherwise indicated.
3. Connections to Ground Rods at Test Wells: Bolted connectors.
4. Connections to Structural Steel: Welded connectors.

3.2 GROUNDING AT THE SERVICE

A. Equipment grounding conductors and grounding electrode conductors shall be connected to the ground bus. Install a main bonding jumper between the neutral and ground buses.

3.3 GROUNDING SEPARATELY DERIVED SYSTEMS

A. Separately derived systems such as transformers or generators (if identified as such) shall bond neutral and ground together with a bonding jumper at the equipment in accordance with NEC 250.102. Connection to the grounding electrode system via the electrode grounding conductor shall be in accordance with NEC Table 250.66 or as shown on the Drawings.

3.4 GROUNDING UNDERGROUND DISTRIBUTION SYSTEM COMPONENTS

A. Comply with IEEE C2 grounding requirements.

B. Grounding Manholes and Handholes: Install a driven ground rod through manhole or handhole floor, close to wall, and set rod depth so 4 inches will extend above finished floor. If necessary, install ground rod before manhole is placed and provide No. 1/0 AWG bare, tinned-copper conductor from ground rod into manhole through a waterproof sleeve in manhole wall. Protect ground rods passing through concrete floor with a double wrapping of pressure-sensitive insulating tape or heat-shrunk insulating sleeve from 2 inches above to 6 inches below concrete. Seal floor opening with waterproof, nonshrink grout.

C. Grounding Connections to Manhole Components: Bond exposed-metal parts such as inserts, cable racks, pulling irons, ladders, and cable shields within each manhole or handhole, to ground rod or grounding conductor. Make connections with No. 4 AWG minimum, stranded, hard-drawn copper bonding conductor. Train conductors level or plumb around corners and fasten to manhole walls. Connect to cable armor and cable shields according to written instructions by manufacturer of splicing and termination kits.

D. Pad-Mounted Transformers and Switches: Install two ground rods and ground ring around the pad. Ground pad-mounted equipment and noncurrent-carrying metal items associated with substations by connecting them to underground cable and grounding electrodes. Install tinned-copper conductor not less than No. 2 AWG for ground ring and for taps to equipment grounding terminals. Bury ground ring not less than 6 inches from the foundation.

3.5 EQUIPMENT GROUNDING

A. Install insulated equipment grounding conductors with the following items, in addition to those required by NFPA 70:

1. Feeders and branch circuits.
2. Lighting circuits.
3. Receptacle circuits.
4. Single-phase motor and appliance branch circuits.
5. Three-phase motor and appliance branch circuits.
6. Flexible raceway runs.
7. Armored and metal-clad cable runs.
8. Busway Supply Circuits: Install insulated equipment grounding conductor from grounding bus in the switchgear, switchboard, or distribution panel to equipment grounding bar terminal on busway.
9. X-Ray Equipment Circuits: Install insulated equipment grounding conductor in circuits supplying x-ray equipment.

B. Air-Duct Equipment Circuits: Install insulated equipment grounding conductor to duct-mounted electrical devices operating at 120 V and more, including air cleaners, heaters, dampers, humidifiers, and other duct electrical equipment. Bond conductor to each unit and to air duct and connected metallic piping.

C. Water Heater, Heat-Tracing, and Antifrost Heating Cables: Install a separate insulated equipment grounding conductor to each electric water heater and heat-tracing cable. Bond conductor to heater units, piping, connected equipment, and components.

D. Isolated Grounding Receptacle Circuits: Install an insulated equipment grounding conductor connected to the receptacle grounding terminal. Isolate conductor from raceway and from panelboard grounding terminals. Terminate at equipment grounding conductor terminal of the applicable derived system or service unless otherwise indicated.

E. Isolated Equipment Enclosure Circuits: For designated equipment supplied by a branch circuit or feeder, isolate equipment enclosure from supply circuit raceway with a nonmetallic raceway fitting listed for the purpose. Install fitting where raceway enters enclosure, and install a separate insulated equipment grounding conductor. Isolate conductor from raceway and from panelboard grounding terminals. Terminate at equipment grounding conductor terminal of the applicable derived system or service unless otherwise indicated.

3.6 INSTALLATION

A. Grounding Electrode Conductors: Route along shortest and straightest paths possible unless otherwise indicated or required by Code. Avoid obstructing access or placing conductors where they may be subjected to strain, impact, or damage.

1. Where conductors pass through floor slabs, walls, etc., they shall be installed in conduit or sleeved.
2. Conductors subject to mechanical damage shall be protected by non-ferrous conduit to avoid a choke effect for fault currents.

B. Ground Bonding Common with Lightning Protection System: Comply with NFPA 780 and UL 96 when interconnecting with lightning protection system. Bond electrical power system ground directly to lightning protection system grounding conductor at closest point to electrical service grounding electrode. Use bonding conductor sized same as system grounding electrode conductor, and install in conduit.

C. Ground Rods: Drive rods until tops are 2 inches below finished floor or final grade unless otherwise indicated.

1. Interconnect ground rods with grounding electrode conductor below grade and as otherwise indicated. Make connections without exposing steel or damaging coating if any.
2. Use exothermic welds for all below-grade connections.
3. For grounding electrode system, install at least three rods spaced at least one-rod length from each other and located at least the same distance from other grounding electrodes, and connect to the service grounding electrode conductor.
4. Rods shall be installed vertically and not allowed to be deformed or driven at an angle. Where driving is difficult or where rock is encountered, Contractor shall use purpose-designed drilling equipment, install the rod into the drilled hole and backfill around rod using ground enhancement material (GEM) mixed with water to form a slurry in accordance with the Manufacturer's instructions.

D. Test Wells: Ground rod driven through drilled hole in bottom of handhole. Handholes are specified in Section 260543 "Underground Ducts and Raceways for Electrical Systems," and shall be at least 12 inches deep, with cover.

1. Install at least one test well for each service unless otherwise indicated. Install at the ground rod electrically closest to service entrance. Set top of test well flush with finished grade or floor.

E. Bonding Straps and Jumpers: Install in locations accessible for inspection and maintenance except where routed through short lengths of conduit.

1. Bonding to Structure: Bond straps directly to basic structure, taking care not to penetrate any adjacent parts.
2. Bonding to Equipment Mounted on Vibration Isolation Hangers and Supports: Install bonding so vibration is not transmitted to rigidly mounted equipment.
3. Use exothermic-welded connectors for outdoor locations; if a disconnect-type connection is required, use a bolted clamp.

F. Grounding and Bonding for Piping:

1. Metal Water Service Pipe: Install insulated copper grounding conductors, in conduit, from building's main service equipment, or grounding bus, to main metal water service entrances to building. Connect grounding conductors to main metal water service pipes; use a bolted clamp connector or bolt a lug-type connector to a pipe flange by using one of the lug bolts of the flange. Where a dielectric main water fitting is installed, connect grounding conductor on street side of fitting. Bond metal grounding conductor conduit or sleeve to conductor at each end.
2. Water Meter Piping: Use braided-type bonding jumpers to electrically bypass water meters. Connect to pipe with a bolted connector.
3. Bond each aboveground portion of gas piping system downstream from equipment shutoff valve.

G. Bonding Interior Metal Ducts: Bond metal air ducts to equipment grounding conductors of associated fans, blowers, electric heaters, and air cleaners. Install tinned bonding jumper to bond across flexible duct connections to achieve continuity.

H. Grounding for Steel Building Structure: Install a driven ground rod at base of each corner column and at intermediate exterior columns at distances not more than 60 feet apart or as shown on the Contract Drawings.

I. Ground Ring: Install a grounding conductor, electrically connected to each building structure ground rod and to each steel column, extending around the perimeter of area or item indicated.

1. Install tinned-copper conductor not less than No.4/0 AWG for ground ring and for taps to building steel.
2. Bury ground ring not less than 24 inches from building's foundation.
3. Lay all underground conductors slack, and where exposed to mechanical injury, protect by pipes or other substantial guards. If guards are iron pipe, or other magnetic material, electrically connect conductors to both ends of the guard.

J. Connections: Make connections so possibility of galvanic action or electrolysis is minimized. Select connectors, connection hardware, conductors, and connection methods so metals in direct contact are galvanically compatible.

1. Use electroplated or hot-tin-coated materials to ensure high conductivity and to make contact points closer in order of galvanic series.
2. Make connections with clean, bare metal at points of contact.
3. Make aluminum-to-steel connections with stainless-steel separators and mechanical clamps.
4. Make aluminum-to-galvanized-steel connections with tin-plated copper jumpers and mechanical clamps.
5. Coat and seal connections having dissimilar metals with inert material to prevent future penetration of moisture to contact surfaces.

3.7 FIELD QUALITY CONTROL

A. Testing Agency: Engage a qualified testing agency to perform tests and inspections.

B. Manufacturer's Field Service: Engage a factory-authorized service representative to test and inspect components, assemblies, and equipment installations, including connections.

C. Perform tests and inspections.

D. Tests and Inspections:

1. After installing grounding system but before permanent electrical circuits have been energized, test for compliance with requirements.
2. Inspect physical and mechanical condition. Verify tightness of accessible, bolted, electrical connections with a calibrated torque wrench according to manufacturer's written instructions.
3. Test completed grounding system at each location where a maximum ground-resistance level is specified, at service disconnect enclosure grounding terminal, at ground test wells. Make tests at ground rods before any conductors are connected.

   a. Measure ground resistance no fewer than two full days after last trace of precipitation and without soil being moistened by any means other than natural drainage or seepage and without chemical treatment or other artificial means of reducing natural ground resistance.
   b. Perform tests by fall-of-potential method according to IEEE 81.

4. Prepare dimensioned Drawings locating each test well, ground rod and ground-rod assembly, and other grounding electrodes. Identify each by letter in alphabetical order, and key to the record of tests and observations. Include the number of rods driven and their depth at each location, and include observations of weather and other phenomena that may affect test results. Describe measures taken to improve test results.

E. Grounding system will be considered defective if it does not pass tests and inspections.

F. Prepare test and inspection reports.

G. Report measured ground resistances that exceed the following values:

1. Power and Lighting Equipment or System with Capacity of 500 kVA and Less: 10 ohms.
2. Power and Lighting Equipment or System with Capacity of 500 to 1000 kVA: 5 ohms.
3. Power and Lighting Equipment or System with Capacity More Than 1000 kVA: 3 ohms.
4. Power Distribution Units or Panelboards Serving Electronic Equipment: 1 ohm(s).
5. Substations and Pad-Mounted Equipment: 5 ohms.
6. Manhole Grounds: 10 ohms.

H. Excessive Ground Resistance: If resistance to ground exceeds specified values, notify Engineer promptly and include recommendations to reduce ground resistance.

END OF SECTION 260526

© 2023 CDM Smith
All Rights Reserved

This page intentionally left blank.

© 2023 CDM Smith
All Rights Reserved

SECTION 260533 - RACEWAYS AND BOXES FOR ELECTRICAL SYSTEMS

PART 1 - GENERAL

1.1 RELATED DOCUMENTS

A. Drawings and general provisions of the Contract, including General and Supplementary Conditions and Division 01 Specification Sections, apply to this Section.

1.2 SUMMARY

A. Section Includes:

1. Metal conduits and fittings.
2. Nonmetallic conduits and fittings.
3. Metal wireways and auxiliary gutters.
4. Nonmetal wireways and auxiliary gutters.
5. Surface raceways.
6. Boxes, enclosures, and cabinets.
7. Handholes and boxes for exterior underground cabling.

B. Related Requirements:
1. Section 260543 "Underground Ducts and Raceways for Electrical Systems" for exterior ductbanks, manholes, and underground utility construction.

1.3 DEFINITIONS

A. ARC: Aluminum rigid conduit.

B. GRC: Galvanized rigid steel conduit.

C. IMC: Intermediate metal conduit.

D. SSC: Stainless steel conduit.

1.4 ACTION SUBMITTALS

A. Product Data: For surface raceways, wireways and fittings, floor boxes, hinged-cover enclosures, and cabinets.

B. Shop Drawings: For custom enclosures and cabinets. Include plans, elevations, sections, and attachment details.

1.5 INFORMATIONAL SUBMITTALS

A. Qualification Data: For professional engineer.

B. Seismic Qualification Data: Certificates, for enclosures, cabinets, and conduit racks and their mounting provisions, including those for internal components, from manufacturer.

1. Basis for Certification: Indicate whether withstand certification is based on actual test of assembled components or on calculation.
2. Dimensioned Outline Drawings of Equipment Unit: Identify center of gravity and locate and describe mounting and anchorage provisions.
3. Detailed description of equipment anchorage devices on which the certification is based and their installation requirements.
4. Detailed description of conduit support devices and interconnections on which the certification is based and their installation requirements.

C. Source quality-control reports.

PART 2 - PRODUCTS

2.1 METAL CONDUITS AND FITTINGS

A. Metal Conduit:

1. Listing and Labeling: Listed and labeled as defined in NFPA 70, by a qualified testing agency, and marked for intended location and application.
2. GRC: Comply with ANSI C80.1 and UL 6.
3. ARC: Comply with ANSI C80.5 and UL 6A.
4. PVC-Coated Steel Conduit: PVC-coated rigid steel conduit.

a. Comply with NEMA RN 1.
b. Coating Thickness: 0.040 inch, minimum.

5. EMT: Comply with ANSI C80.3 and UL 797.
6. LFMC: Flexible steel conduit with PVC jacket and complying with UL 360.

B. Metal Fittings:

1. Comply with NEMA FB 1 and UL 514B.
2. Listing and Labeling: Listed and labeled as defined in NFPA 70, by a qualified testing agency, and marked for intended location and application.
3. Fittings, General: Listed and labeled for type of conduit, location, and use.
4. Conduit Fittings for Hazardous (Classified) Locations: Comply with UL 1203 and NFPA 70.
5. Fittings for EMT:

a. Material: Steel.
b. Type: compression.

6. Expansion Fittings: PVC or steel to match conduit type, complying with UL 651, rated for environmental conditions where installed, and including flexible external bonding jumper.
7. Coating for Fittings for PVC-Coated Conduit: Minimum thickness of 0.040 inch, with overlapping sleeves protecting threaded joints.

C. Joint Compound for IMC, GRC, or ARC: Approved, as defined in NFPA 70, by authorities having jurisdiction for use in conduit assemblies, and compounded for use to lubricate and protect threaded conduit joints from corrosion and to enhance their conductivity.

2.2 NONMETALLIC CONDUITS AND FITTINGS

A. Nonmetallic Conduit:

1. Listing and Labeling: Nonmetallic conduit shall be listed and labeled as defined in NFPA 70, by a qualified testing agency, and marked for intended location and application.
2. ENT: Comply with NEMA TC 13 and UL 1653.
3. RNC: Type EPC-40-PVC, complying with NEMA TC 2 and UL 651 unless otherwise indicated.

B. Nonmetallic Fittings:

1. Fittings, General: Listed and labeled for type of conduit, location, and use.
2. Fittings for ENT and RNC: Comply with NEMA TC 3; match to conduit or tubing type and material.
3. Solvents and Adhesives: As recommended by conduit manufacturer.

C. Conduit Supports: Provide the following types of conduit supports.

2.3 METAL WIREWAYS AND AUXILIARY GUTTERS

A. Description: Sheet metal, complying with UL 870 and NEMA 250, Type 1 unless otherwise indicated, and sized according to NFPA 70.

1. Metal wireways installed outdoors shall be listed and labeled as defined in NFPA 70, by a qualified testing agency, and marked for intended location and application.

B. Fittings and Accessories: Include covers, couplings, offsets, elbows, expansion joints, adapters, hold-down straps, end caps, and other fittings to match and mate with wireways as required for complete system.

C. Wireway Covers: Hinged type unless otherwise indicated.

D. Finish: Manufacturer's standard enamel finish.

2.4 MISCELLANEOUS FITTINGS

A. Flexible Couplings:

1. Manufacturers: Provide products by one of the following:

    a. "Type ECGJH," by the Crouse-Hinds Co.
    b. Appleton Electric Co.
    c. Killark Electric Manufacturing Co.
    d. Or equal.

B. Conduit Hubs:

1. Manufacturers: Provide products by one of the following:

    a. Myers Electric Products, Inc.
    b. Or equal.

C. Conduit Wall Seals for New Concrete Walls Below Grade:

1. Products: Provide one of the following:

    a. O.Z./Gedney Co., Type WSK; [Linkseal].
    b. Spring City Electrical Manufacturing Co., Type WDP.
    c. Or equal.

D. Conduit Wall Seals for Cored Holes:

1. Products: Provide one of the following:

    a. Type CSMC as manufactured by the O.Z./Gedney Co.
    b. Or equal.

E. Conduit Wall and Floor Seals For Sleeved Openings:

1. Products: Provide one of the following:

    a. Type CSMI as manufactured by the O.Z./Gedney Co.
    b. Or equal.

F. Combination Expansion-Deflection Fittings Embedded in Concrete:

1. Products: Provide one of the following:

    a. Type XD as manufactured by the Crouse-Hinds Co.
    b. Type DX as manufactured by O.Z./Gedney Co.
    c. Type DF as manufactured by Appleton Electric Co.
    d. Or equal.

G. Combination Expansion-Deflection Fittings Installed Exposed:

1. Products: Provide one of the following:

    a. Type XD as manufactured by Crouse-Hinds Co.
    b. Type DX as manufactured by O.Z. Gedney Co.
    c. Type DF as manufactured by Appleton Electric Co.

d. Or equal.

H. Explosion Proof Fittings:

1. Manufacturers: Provide products by one of the following:

a. Crouse-Hinds Co.
b. Appleton Electric Co.
c. O.Z./Gedney Co.
d. Or equal.

I. Conduit Sealing Bushings:

1. Products: Provide one of the following:

a. O.Z./Gedney, Type CSB.
b. Or equal.

J. Grounding Bushings: Malleable iron with integral insulated throat rated for 300 degrees F, with solderless lugs.

1. Products: Provide one of the following:

a. Crouse Hinds/Cooper, Series HGLL.
b. Appleton, Series GIB.
c. O.Z./Gedney, Type HBLG.
d. Or equal.

2.5 BOXES, ENCLOSURES, AND CABINETS (NON-HAZARDOUS LOCATIONS)

A. General Requirements for Boxes, Enclosures, and Cabinets: Boxes, enclosures, and cabinets installed in wet locations shall be listed for use in wet locations.

B. Sheet Metal Outlet and Device Boxes: Comply with NEMA OS 1 and UL 514A.

C. Cast-Metal Outlet and Device Boxes: Comply with NEMA FB 1, ferrous alloy, Type FD, with gasketed cover.

D. Luminaire Outlet Boxes: Nonadjustable, designed for attachment of luminaire weighing 50 lb. Outlet boxes designed for attachment of luminaires weighing more than 50 lb shall be listed and marked for the maximum allowable weight.

E. Small Sheet Metal Pull and Junction Boxes: NEMA OS 1.

F. Cast-Metal Access, Pull, and Junction Boxes: Comply with NEMA FB 1 and UL 1773, cast aluminum galvanized, cast iron with gasketed cover.

G. Box extensions used to accommodate new building finishes shall be of same material as recessed box.

H. Device Box Dimensions: 4 inches square by 2-1/8 inches deep.

I. Gangable boxes are allowed.

J. Hinged-Cover Enclosures: Comply with UL 50 and NEMA 250, Type 1 with gasketed painted steel or Type 4X gasketed type 316 stainless steel continuous-hinge cover with flush latch unless otherwise indicated.

1. Metal Enclosures: Steel, finished inside and out with manufacturer's standard enamel.
2. Interior Panels: Steel; all sides finished with manufacturer's standard enamel.

K. Cabinets:

1. NEMA 250, Type 1 Type 3R or Type 4X gasketed type 316 stainless steel with removable interior panel and removable front, finished inside and out with manufacturer's standard enamel.
2. Hinged door in front cover with flush latch and concealed hinge.
3. Key latch to match panelboards.
4. Metal barriers to separate wiring of different systems and voltage.
5. Accessory feet where required for freestanding equipment.
6. Nonmetallic cabinets shall be listed and labeled as defined in NFPA 70, by a qualified testing agency, and marked for intended location and application.

2.6 TERMINAL BLOCKS

A. Manufacturers: Subject to compliance with requirements, available manufacturers offering products that may be incorporated into the Work include, but are not limited to the following:

1. Eaton.
2. Rockwell Automation.
3. TE Connectivity.

B. Description:

1. Terminal Blocks: NEMA ICS 4.
2. Power Terminals: Unit construction type with closed back and tubular pressure screw connectors, rated 600 volts.
3. Signal and Control Terminals: Modular construction type, suitable for channel mounting, with tubular pressure screw connectors, rated 300 volts.
4. Furnish ground bus terminal block, with each connector bonded to enclosure.

2.7 HAZARDOUS (CLASSIFIED) LOCATION BOXES

A. Design explosion-proof boxes for Class 1, Group D, Division 1 hazardous locations, provided with O-ring seals to meet NEMA 4 requirements.

1. Boxes and Covers: Aluminum, with stainless steel hinges and stainless steel bolts.
2. Manufacturer: Provide products by one of the following:

a. “Type EJB-N4,” by the Crouse-Hinds Co.
b. Appleton Electric Co.

c. Adalet-PLM
d. Or equal.

PART 3 - EXECUTION

3.1 RACEWAY APPLICATION

A. Outdoors: Apply raceway products as specified below unless otherwise indicated:

1. Exposed Conduit: ARC. PVC-coated rigid steel in chemical storage and handling areas.
2. Concealed Conduit, Aboveground: GRC or RNC, Type EPC-40-PVC.
3. Underground Conduit: RNC, Type EPC-40-PVC, concrete encased.
4. Connection to Vibrating Equipment (Including Transformers and Hydraulic, Pneumatic, Electric Solenoid, or Motor-Driven Equipment): LFMC.
5. Boxes and Enclosures, Aboveground: NEMA 250, Type 4X SS.

B. Minimum Raceway Size: 3/4-inch trade size.

C. Raceway Fittings: Compatible with raceways and suitable for use and location.

1. Rigid and Intermediate Steel Conduit: Use threaded rigid steel conduit fittings unless otherwise indicated. Comply with NEMA FB 2.10.
2. PVC Externally Coated, Rigid Steel Conduits: Use only fittings listed for use with this type of conduit. Patch and seal all joints, nicks, and scrapes in PVC coating after installing conduits and fittings. Use sealant recommended by fitting manufacturer and apply in thickness and number of coats recommended by manufacturer.
3. EMT: Use compression, steel fittings. Comply with NEMA FB 2.10.
4. Flexible Conduit: Use only fittings listed for use with flexible conduit. Comply with NEMA FB 2.20.

D. Install nonferrous conduit or tubing for circuits operating above 60 Hz. Where aluminum raceways are installed for such circuits and pass through concrete, install in nonmetallic sleeve.

E. Do not install aluminum conduits, boxes, or fittings in contact with concrete or earth.

F. Install surface raceways only where indicated on Drawings.

G. Do not install nonmetallic conduit where ambient temperature exceeds 120 deg F.

3.2 INSTALLATION

A. Comply with requirements in Section 260529 "Hangers and Supports for Electrical Systems" for hangers and supports.

B. Comply with NECA 1 and NECA 101 for installation requirements except where requirements on Drawings or in this article are stricter. Comply with NECA 102 for aluminum conduits. Comply with NFPA 70 limitations for types of raceways allowed in specific occupancies and number of floors.

C. Do not install raceways or electrical items on any "explosion-relief" walls or rotating equipment.

D. Do not fasten conduits onto the bottom side of a metal deck roof.

E. Keep raceways at least 6 inches away from parallel runs of flues and steam or hot-water pipes. Install horizontal raceway runs above water and steam piping.

F. Complete raceway installation before starting conductor installation.

G. Arrange stub-ups so curved portions of bends are not visible above finished slab.

H. Install no more than the equivalent of three 90-degree bends in any conduit run. Support within 12 inches of changes in direction.

I. Make bends in raceway using large-radius preformed ells. Field bending shall be according to NFPA 70 minimum radii requirements. Use only equipment specifically designed for material and size involved.

J. Conceal conduit within finished walls, ceilings, and floors unless otherwise indicated. Install conduits parallel or perpendicular to building lines.

K. Support conduit within 12 inches of enclosures to which attached.

L. Raceways Embedded in Slabs:

1. Run conduit larger than 1-inch trade size, parallel or at right angles to main reinforcement. Where at right angles to reinforcement, place conduit close to slab support. Secure raceways to reinforcement at maximum 10-foot intervals.
2. Arrange raceways to cross building expansion joints at right angles with expansion fittings.
3. Arrange raceways to keep a minimum of 1 inch of concrete cover in all directions.
4. Do not embed threadless fittings in concrete unless specifically approved by Engineer for each specific location.

M. Threaded Conduit Joints, Exposed to Wet, Damp, Corrosive, or Outdoor Conditions: Apply listed compound to threads of raceway and fittings before making up joints. Follow compound manufacturer's written instructions.

N. Coat field-cut threads on PVC-coated raceway with a corrosion-preventing conductive compound prior to assembly.

O. Raceway Terminations at Locations Subject to Moisture or Vibration: Use insulating bushings to protect conductors including conductors smaller than No. 4 AWG.

P. Terminate threaded conduits into threaded hubs or with locknuts on inside and outside of boxes or cabinets. Install bushings on conduits up to 1-1/4-inch trade size and insulated throat metal bushings on 1-1/2-inch trade size and larger conduits terminated with locknuts. Install insulated throat metal grounding bushings on service conduits.

Q. Install raceways square to the enclosure and terminate at enclosures with locknuts. Install locknuts hand tight plus 1/4 turn more.

R. Do not rely on locknuts to penetrate nonconductive coatings on enclosures. Remove coatings in the locknut area prior to assembling conduit to enclosure to assure a continuous ground path.

S. Cut conduit perpendicular to the length. For conduits 2-inch trade size and larger, use roll cutter or a guide to make cut straight and perpendicular to the length.

T. Install pull wires in empty raceways. Use polypropylene or monofilament plastic line with not less than 200-lb tensile strength. Leave at least 12 inches of slack at each end of pull wire. Cap underground raceways designated as spare above grade alongside raceways in use.

U. Install raceway sealing fittings at accessible locations according to NFPA 70 and fill them with listed sealing compound. For concealed raceways, install each fitting in a flush steel box with a blank cover plate having a finish similar to that of adjacent plates or surfaces. Install raceway sealing fittings according to NFPA 70.

V. Install devices to seal raceway interiors at accessible locations. Locate seals so no fittings or boxes are between the seal and the following changes of environments. Seal the interior of all raceways at the following points:

1. Where conduits pass from warm to cold locations, such as boundaries of refrigerated spaces.
2. Where an underground service raceway enters a building or structure.
3. Conduit extending from interior to exterior of building.
4. Conduit extending into pressurized duct and equipment.
5. Conduit extending into pressurized zones that are automatically controlled to maintain different pressure set points.
6. Where otherwise required by NFPA 70.

W. Comply with manufacturer's written instructions for solvent welding RNC and fittings.

X. Expansion-Joint Fittings:

1. Install in each run of aboveground RNC that is located where environmental temperature change may exceed 30 deg F and that has straight-run length that exceeds 25 feet. Install in each run of aboveground RMC conduit that is located where environmental temperature change may exceed 100 deg F and that has straight-run length that exceeds 100 feet.
2. Install type and quantity of fittings that accommodate temperature change listed for each of the following locations:

   a. Outdoor Locations Not Exposed to Direct Sunlight: 125 deg F temperature change.
   b. Outdoor Locations Exposed to Direct Sunlight: 155 deg F temperature change.
   c. Indoor Spaces Connected with Outdoors without Physical Separation: 125 deg F temperature change.

3. Install fittings that provide expansion and contraction for at least 0.00041 inch per foot of length of straight run per deg F of temperature change for PVC conduits. Install fittings

that provide expansion and contraction for at least 0.000078 inch per foot of length of straight run per deg F of temperature change for metal conduits.

4. Install expansion fittings at all locations where conduits cross building or structure expansion joints.
5. Install each expansion-joint fitting with position, mounting, and piston setting selected according to manufacturer's written instructions for conditions at specific location at time of installation. Install conduit supports to allow for expansion movement.

Y. Flexible Conduit Connections: Comply with NEMA RV 3. Use a maximum of 36 inches of flexible conduit for equipment subject to vibration, noise transmission, or movement; and for transformers and motors.

1. Use LFMC in damp or wet locations subject to severe physical damage.
2. Use LFMC or LFNC in damp or wet locations not subject to severe physical damage.

Z. Mount boxes at heights indicated on Drawings. If mounting heights of boxes are not individually indicated, give priority to ADA requirements. Install boxes with height measured to top of box unless otherwise indicated.

AA. Recessed Boxes in Masonry Walls: Saw-cut opening for box in center of cell of masonry block and install box flush with surface of wall. Prepare block surfaces to provide a flat surface for a raintight connection between box and cover plate or supported equipment and box.

BB. Horizontally separate boxes mounted on opposite sides of walls, so they are not in the same vertical channel.

CC. Locate boxes so that cover or plate will not span different building finishes.

DD. Support boxes of three gangs or more from more than one side by spanning two framing members or mounting on brackets specifically designed for the purpose.

EE. Fasten junction and pull boxes to or support from building structure. Do not support boxes by conduits.

FF. Set metal floor boxes level and flush with finished floor surface.

GG. Set nonmetallic floor boxes level. Trim after installation to fit flush with finished floor surface.

HH. A maximum continuous run of conduit shall not exceed 300 feet and shall be reduced by 75 feet for each 90-degree elbow.

II. Provide a 4-inch concrete housekeeping pad at all slab and grade penetrations. Provide a 45 degree, 3/4-inch chamfer at all exposed edges.

JJ. Protect metallic finish conduit installed in contact with concrete or below grade with two coats of bitumastic paint, heat shrink tubing, or approved equivalent.

KK. In hazardous locations, seal conduits terminating at boxes enclosing circuit opening equipment at the entrance to the enclosure with approved compound filled sealing fittings to prevent passage of explosive or combustible gases through the conduits. Similarly seal all conduits leading from or entering hazardous locations at points of exit or entrance. Seal exposed conduits

passing through hazardous locations at both the entrance to and the exit from the hazardous locations. A sealing compound installation schedule shall be presented to the Engineer for approval. Sign off on each installation and present the compound installation schedule to the Engineer for final sign-off. Each fitting shall be legibly marked with red paint to indicate that the sealing compound has been installed.

LL. Install conduit sealing and drain fittings in all hazardous (classified) areas designated Class 1, Division 1, and Class 1, Division 2.

MM. Use liquid-tight flexible metal conduit for all motor terminations, the primary and secondary of transformers, generator terminations and other equipment where vibration is present or may require removal. The length of liquid-tight flexible metal conduit shall not exceed 36 inches when used for vibration isolation and shall not exceed 72 inches in length when attaching to luminaires. Non-metallic flexible conduit shall only be allowed for use with rigid PVC conduit systems.

NN. Flexible couplings shall be used in hazardous locations for all motor terminations and other equipment where vibration is present.

3.3 SLEEVE AND SLEEVE-SEAL INSTALLATION FOR ELECTRICAL PENETRATIONS

A. Install sleeves and sleeve seals at penetrations of exterior floor and wall assemblies. Comply with requirements in Section 260544 "Sleeves and Sleeve Seals for Electrical Raceways and Cabling."

3.4 PROTECTION

A. Protect coatings, finishes, and cabinets from damage and deterioration.

1. Repair damage to galvanized finishes with zinc-rich paint recommended by manufacturer.
2. Repair damage to PVC coatings or paint finishes with matching touchup coating recommended by manufacturer.

END OF SECTION 260533

© 2023 CDM Smith
All Rights Reserved

This page intentionally left blank.

© 2023 CDM Smith
All Rights Reserved

SECTION 260543 - UNDERGROUND DUCTS AND RACEWAYS FOR ELECTRICAL SYSTEMS

PART 1 - GENERAL

1.1 RELATED DOCUMENTS

A. Drawings and general provisions of the Contract, including General and Supplementary Conditions and Division 01 Specification Sections, apply to this Section.

1.2 SUMMARY

A. Section Includes:

1. Metal conduits and fittings, including GRC and PVC-coated steel conduit.
2. Rigid nonmetallic duct.
3. Flexible nonmetallic duct.
4. Duct accessories.
5. Precast concrete handholes.
6. Polymer concrete handholes and boxes with polymer concrete cover.
7. Fiberglass handholes and boxes with polymer concrete cover.
8. Fiberglass handholes and boxes.
9. High-density plastic boxes.
10. Precast manholes.
11. Cast-in-place manholes.
12. Utility structure accessories.

1.3 DEFINITIONS

A. Direct Buried: Duct or a duct bank that is buried in the ground, without any additional casing materials such as concrete.

B. Duct: A single duct or multiple ducts. Duct may be either installed singly or as component of a duct bank.

C. Duct Bank:

1. Two or more ducts installed in parallel, with or without additional casing materials.
2. Multiple duct banks.

D. GRC: Galvanized rigid (steel) conduit.

E. Trafficways: Locations where vehicular or pedestrian traffic is a normal course of events.

1.4 ACTION SUBMITTALS

A. Product Data: For each type of product.

1. Include duct-bank materials, including spacers and miscellaneous components.
2. Include duct, conduits, and their accessories, including elbows, end bells, bends, fittings, and solvent cement.
3. Include accessories for manholes, handholes, boxes.
4. Include underground-line warning tape.

B. Shop Drawings:

1. Precast or Factory-Fabricated Underground Utility Structures:

a. Include plans, elevations, sections, details, attachments to other work, and accessories.
b. Include duct entry provisions, including locations and duct sizes.
c. Include reinforcement details.
d. Include frame and cover design and manhole chimneys.
e. Include ladder details.
f. Include grounding details.
g. Include dimensioned locations of cable rack inserts, pulling-in and lifting irons, and sumps.
h. Include joint details.

2. Factory-Fabricated Handholes and Boxes Other Than Precast Concrete:

a. Include dimensioned plans, sections, and elevations, and fabrication and installation details.
b. Include duct entry provisions, including locations and duct sizes.
c. Include cover design.
d. Include grounding details.
e. Include dimensioned locations of cable rack inserts, and pulling-in and lifting irons.

1.5 INFORMATIONAL SUBMITTALS

A. Coordination Drawings: For duct and duct bank. Show duct profiles and coordination with other utilities and underground structures.

1. Include plans and sections, drawn to scale, and show bends and locations of expansion fittings.
2. Drawings shall be signed and sealed by a qualified professional engineer.

B. Qualification Data: For professional engineer and testing agency responsible for testing nonconcrete handholes and boxes.

C. Product Certificates: For concrete and steel used in precast concrete manholes and handholes, as required by ASTM C858.

D. Source quality-control reports.

E. Field quality-control reports.

1.6 MAINTENANCE MATERIALS SUBMITTALS

A. Furnish extra materials that match products installed and that are packaged with protective covering for storage and identified with labels describing contents.

B. Furnish cable-support stanchions, arms, insulators, and associated fasteners in quantities equal to 5 percent of quantity of each item installed.

1.7 QUALITY ASSURANCE

A. Testing Agency Qualifications: Qualified according to ASTM E329 for testing indicated.

1.8 FIELD CONDITIONS

A. Ground Water: Assume ground-water level is at grade level unless a lower water table is noted on Drawings.

B. Ground Water: Assume ground-water level is 36 inches below ground surface unless a higher water table is noted on Drawings.

PART 2 - PRODUCTS

2.1 DUCT ACCESSORIES

A. Duct Spacers: Factory-fabricated, rigid, PVC interlocking spacers; sized for type and size of duct with which used, and selected to provide minimum duct spacing indicated while supporting duct during concreting or backfilling.

1. Manufacturers: Subject to compliance with requirements, available manufacturers offering products that may be incorporated into the Work include, but are not limited to the following:

a. Allied Tube & Conduit; Atkore International.
b. Cantex Inc.
c. IPEX USA LLC.

B. Underground-Line Warning Tape: Comply with requirements for underground-line warning tape specified in Section 260553 "Identification for Electrical Systems."

C. Concrete Warning Planks: Nominal 12 by 24 by 3 inches in size, manufactured from 6,000-psi concrete.

1. Color: One of the following:

a. Red dye added to concrete during batching.
b. Apply red dye mixed with water to the top of the concrete duct bank with a sprayer while the concrete wet (prior to curing).

2. Mark each plank with "ELECTRIC" in 2-inch-high, 3/8-inch-deep letters.

2.2 PRECAST CONCRETE HANDHOLES AND BOXES

A. Description: Factory-fabricated, reinforced-concrete, monolithically poured walls and bottom unless open-bottom enclosures are indicated. Frame and cover shall form top of enclosure and shall have load rating consistent with that of handhole or box.

B. Manufacturers: Subject to compliance with requirements, available manufacturers offering products that may be incorporated into the Work include, but are not limited to the following:

1. Oldcastle Infrastructure Inc.; CRH Americas.
2. Utility Concrete Products, LLC.
3. Utility Vault Co.

C. Comply with ASTM C858 for design and manufacturing processes.

D. Frame and Cover: Weatherproof cast-iron frame, with cast-iron cover with recessed cover hook eyes and tamper-resistant, captive, cover-securing bolts.

E. Cover Finish: Nonskid finish shall have a minimum coefficient of friction of 0.50.

F. Cover Legend: Molded lettering, "ELECTRIC."

G. Configuration: Units shall be designed for flush burial and have open bottom unless otherwise indicated.

H. Extensions and Slabs: Designed to mate with bottom of enclosure. Same material as enclosure.

1. Extension shall provide increased depth of 12 inches.
2. Slab: Same dimensions as bottom of enclosure, and arranged to provide closure.

I. Joint Sealant: Asphaltic-butyl material with adhesion, cohesion, flexibility, and durability properties necessary to withstand maximum hydrostatic pressures at the installation location with the ground-water level at grade.

J. Knockout Panels: Precast openings in walls, arranged to match dimensions and elevations of approaching duct, plus an additional 12 inches vertically and horizontally to accommodate alignment variations.

1. Center window location.
2. Knockout panels shall be located no less than 6 inches from interior surfaces of walls, floors, or frames and covers of handholes, but close enough to corners to facilitate racking of cables on walls.
3. Knockout panel opening shall have cast-in-place, welded-wire fabric reinforcement for field cutting and bending to tie into concrete envelopes of duct.
4. Knockout panels shall be framed with at least two additional No. 3 steel reinforcing bars in concrete around each opening.
5. Knockout panels shall be 1-1/2 to 2 inches thick.

K. Duct Entrances in Handhole Walls: Cast end-bell or duct-terminating fitting in wall for each entering duct.

1. Type and size shall match fittings to duct to be terminated.
2. Fittings shall align with elevations of approaching duct and be located near interior corners of handholes to facilitate racking of cable.

L. Handholes 12 inches wide by 24 inches long and larger shall have inserts for cable racks and pulling-in irons installed before concrete is poured.

2.3 PRECAST MANHOLES

A. Description: One-piece units and units with interlocking mating sections, complete with accessories, hardware, and features.

B. Manufacturers: Subject to compliance with requirements, provide products by one of the following:

1. Oldcastle Infrastructure Inc.; CRH Americas.
2. Utility Concrete Products, LLC.
3. Utility Vault Co.

C. Comply with ASTM C858.

D. Structural Design Loading: Comply with requirements in "Underground Enclosure Application" Article.

E. Duct Entrances in Manhole Walls: Cast end-bell or duct-terminating fitting in wall for each entering duct.

1. Type and size shall match fittings to duct to be terminated.
2. Fittings shall align with elevations of approaching duct and be located near interior corners of manholes to facilitate racking of cable.

F. Ground Rod Sleeve: Provide a 3-inch PVC sleeve in manhole floors 2 inches from the wall adjacent to, but not underneath, the duct entering the structure.

G. Joint Sealant: Asphaltic-butyl material with adhesion, cohesion, flexibility, and durability properties necessary to withstand maximum hydrostatic pressures at the installation location with the ground-water level at grade.

2.4 SOURCE QUALITY CONTROL

A. Test and inspect precast concrete utility structures according to ASTM C1037.

B. Nonconcrete Handhole and Pull-Box Prototype Test: Test prototypes of manholes and boxes for compliance with SCTE 77. Strength tests shall be for specified tier ratings of products supplied.

1. Tests of materials shall be performed by an independent testing agency.

2. Strength tests of complete boxes and covers shall be by an independent testing agency or manufacturer. A qualified registered professional engineer shall certify tests by manufacturer.
3. Testing machine pressure gages shall have current calibration certification, complying with ISO 9000 and ISO 10012, and traceable to NIST standards.

PART 3 - EXECUTION

3.1 PREPARATION

A. Coordinate layout and installation of duct, duct bank, manholes, handholes, and boxes with final arrangement of other utilities, site grading, and surface features as determined in the field. Notify Engineer if there is a conflict between areas of excavation and existing structures or archaeological sites to remain.

B. Coordinate elevations of duct and duct-bank entrances into manholes, handholes, and boxes with final locations and profiles of duct and duct banks, as determined by coordination with other utilities, underground obstructions, and surface features. Revise locations and elevations as required to suit field conditions and to ensure that duct and duct bank will drain to manholes and handholes, and as approved by Engineer.

C. Clear and grub vegetation to be removed, and protect vegetation to remain according to Section 311000 "Site Clearing." Remove and stockpile topsoil for reapplication according to Section 311000 "Site Clearing."

3.2 UNDERGROUND DUCT APPLICATION

A. Duct for Electrical Cables More Than 600 V: Type EPC-40-PVC RNC, concrete-encased unless otherwise indicated.

B. Duct for Electrical Feeders 600 V and Less: Type EPC-40-PVC RNC, concrete-encased unless otherwise indicated.

C. Duct for Electrical Branch Circuits: Type EPC-40-PVC RNC, direct-buried unless otherwise indicated.

D. Bored Underground Duct: Type EPEC-40-HDPE unless otherwise indicated.

E. Underground Ducts Crossing Paved Paths, Walks, and Driveways: Type EPC-40 PVC RNC, encased in reinforced concrete.

F. Stub-ups: Concrete-encased PVC-coated GRC.

3.3 EARTHWORK

A. Excavation and Backfill: Comply with Section 312000 "Earthwork," but do not use heavy-duty, hydraulic-operated, compaction equipment.

B. Restoration: Replace area after construction vehicle traffic in immediate area is complete.

C. Restore surface features at areas disturbed by excavation and re-establish original grades unless otherwise indicated. Replace removed sod immediately after backfilling is completed.

D. Restore areas disturbed by trenching, storing of dirt, cable laying, and other work. Restore vegetation and include necessary topsoiling, fertilizing, liming, seeding, sodding, sprigging, and mulching.

E. Cut and patch existing pavement in the path of underground duct, duct bank, and underground structures according to "Cutting and Patching" Article in Section 017300 "Execution."

3.4 DUCT AND DUCT-BANK INSTALLATION

A. Where indicated on Drawings, install duct, spacers, and accessories into the duct-bank configuration shown. Duct installation requirements in this Section also apply to duct bank.

B. Install duct according to NEMA TCB 2.

C. Slope: Pitch duct a minimum slope of 1:300 down toward manholes and handholes and away from buildings and equipment. Slope duct from a high point between two manholes, to drain in both directions.

D. Curves and Bends: Use 5-degree angle couplings for small changes in direction. Use manufactured long sweep bends with a minimum radius of 48 inches, both horizontally and vertically, at other locations unless otherwise indicated.

1. Duct shall have maximum of two 90-degree bends or the total of all bends shall be no more 180 degrees between pull points.

E. Joints: Use solvent-cemented joints in duct and fittings and make watertight according to manufacturer's written instructions. Stagger couplings so those of adjacent duct do not lie in same plane.

F. Installation Adjacent to High-Temperature Steam Lines: Where duct is installed parallel to underground steam lines, perform calculations showing the duct will not be subject to environmental temperatures above 40 deg C. Where environmental temperatures are calculated to rise above 40 deg C, and anywhere the duct crosses above an underground steam line, install insulation blankets listed for direct burial to isolate the duct bank from the steam line.

G. Terminator Entrances to Manholes and Concrete and Polymer Concrete Handholes: Use manufactured, cast-in-place duct terminators, with entrances into structure spaced approximately 6 inches o.c. for 4-inch duct, and vary proportionately for other duct sizes.

1. Begin change from regular spacing to terminator spacing 10 feet from the terminator, without reducing duct line slope and without forming a trap in the line.

H. Building Wall Penetrations: Make a transition from underground duct to GRC at least 10 feet outside the building wall, without reducing duct line slope away from the building and without forming a trap in the line. Use fittings manufactured for RNC-to-GRC transition. Install GRC

penetrations of building walls as specified in Section 260544 "Sleeves and Sleeve Seals for Electrical Raceways and Cabling."

I. Sealing: Provide temporary closure at terminations of duct with pulled cables. Seal spare duct at terminations. Use sealing compound and plugs to withstand at least 15-psig hydrostatic pressure.

J. Pulling Cord: Install 200-lbf-test nylon cord in empty ducts.

K. Concrete-Encased Ducts and Duct Bank:

1. Excavate trench bottom to provide firm and uniform support for duct. Prepare trench bottoms as specified in Section 312000 "Earthwork" for pipes less than 6 inches in nominal diameter.
2. Width: Excavate trench 3 inches wider than duct on each side.
3. Depth: Install so top of duct envelope is at least 24 inches below finished grade in areas not subject to deliberate traffic, and at least 30 inches below finished grade in deliberate traffic paths for vehicles unless otherwise indicated.
4. Support duct on duct spacers coordinated with duct size, duct spacing, and outdoor temperature.
5. Spacer Installation: Place spacers close enough to prevent sagging and deforming of duct, with not less than four spacers per 20 feet of duct. Place spacers within 24 inches of duct ends. Stagger spacers approximately 6 inches between tiers. Secure spacers to earth and to duct to prevent floating during concreting. Tie entire assembly together using fabric straps; do not use tie wires or reinforcing steel that may form conductive or magnetic loops around ducts or duct groups.
6. Elbows: Use manufactured GRC elbows for stub-ups, at building entrances, and at changes of direction in duct run.

    a. Couple RNC duct to GRC with adapters designed for this purpose, and encase coupling with 3 inches of concrete.
    b. Stub-ups to Outdoor Equipment: Extend concrete-encased GRC horizontally a minimum of 60 inches from edge of base. Install insulated grounding bushings on terminations at equipment.

        1) Minimum 4 inches above finished floor and minimum 3 inches from conduit side to edge of slab.

    c. Stub-ups to Indoor Equipment: Extend concrete-encased GRC horizontally a minimum of 60 inches from edge of wall. Install insulated grounding bushings on terminations at equipment.

        1) Minimum 4 inches above finished floor and no less than 3 inches from conduit side to edge of slab.

7. Reinforcement: Reinforce concrete-encased duct where crossing disturbed earth and where indicated. Arrange reinforcing rods and ties without forming conductive or magnetic loops around ducts or duct groups.
8. Forms: Use walls of trench to form side walls of duct bank where soil is self-supporting and concrete envelope can be poured without soil inclusions; otherwise, use forms.

9. Concrete Cover: Install a minimum of 3 inches of concrete cover between edge of duct to exterior envelope wall, 2 inches between duct of like services, and 4 inches between power and communications ducts.
10. Concreting Sequence: Pour each run of envelope between manholes or other terminations in one continuous operation.

    a. Start at one end and finish at the other, allowing for expansion and contraction of duct as its temperature changes during and after the pour. Use expansion fittings installed according to manufacturer's written instructions, or use other specific measures to prevent expansion-contraction damage.
    b. If more than one pour is necessary, terminate each pour in a vertical plane and install 3/4-inch reinforcing-rod dowels extending a minimum of 18 inches into concrete on both sides of joint near corners of envelope.

11. Pouring Concrete: Comply with requirements in "Concrete Placement" Article in Section 033000 "Cast-in-Place Concrete." Place concrete carefully during pours to prevent voids under and between duct and at exterior surface of envelope. Do not allow a heavy mass of concrete to fall directly onto ducts. Allow concrete to flow around duct and rise up in middle, uniformly filling all open spaces. Do not use power-driven agitating equipment unless specifically designed for duct-installation application.

L. Direct-Buried Duct and Duct Bank:

1. Excavate trench bottom to provide firm and uniform support for duct. Comply with requirements in Section 312000 "Earthwork" for preparation of trench bottoms for pipes less than 6 inches in nominal diameter.
2. Width: Excavate trench 3 inches wider than duct on each side.
3. Depth: Install top of duct at least 36 inches below finished grade unless otherwise indicated.
4. Set elevation of bottom of duct bank below frost line.
5. Support ducts on duct spacers coordinated with duct size, duct spacing, and outdoor temperature.
6. Spacer Installation: Place spacers close enough to prevent sagging and deforming of duct, with not less than four spacers per 20 feet of duct. Place spacers within 24 inches of duct ends. Stagger spacers approximately 6 inches between tiers. Secure spacers to earth and to ducts to prevent floating during concreting. Tie entire assembly together using fabric straps; do not use tie wires or reinforcing steel that may form conductive or magnetic loops around ducts or duct groups.
7. Install duct with a minimum of 3 inches between ducts for like services and 6 inches between power and communications duct.
8. Elbows: Install manufactured duct elbows for stub-ups, at building entrances, and at changes of direction in duct direction unless otherwise indicated. Encase elbows for stub-up ducts throughout length of elbow.
9. Install manufactured GRC elbows for stub-ups, at building entrances, and at changes of direction in duct.

    a. Couple RNC duct to GRC with adapters designed for this purpose, and encase coupling with 3 inches of concrete.
    b. Stub-ups to Outdoor Equipment: Extend concrete-encased GRC horizontally a minimum of 60 inches from edge of base. Install insulated grounding bushings on terminations at equipment.

1) Minimum 4 inches above finished floor and minimum 3 inches from conduit side to edge of slab

c. Stub-ups to Indoor Equipment: Extend concrete-encased GRC horizontally a minimum of 60 inches from edge of wall. Install insulated grounding bushings on terminations at equipment.

1) Minimum 4 inches above finished floor and no less than 3 inches from conduit side to edge of slab

10. After installing first tier of duct, backfill and compact. Start at tie-in point and work toward end of duct run, leaving ducts at end of run free to move with expansion and contraction as temperature changes during this process. Repeat procedure after placing each tier. After placing last tier, hand place backfill to 4 inches over duct and hand tamp. Firmly tamp backfill around ducts to provide maximum supporting strength. Use hand tamper only. After placing controlled backfill over final tier, make final duct connections at end of run and complete backfilling with normal compaction. Comply with requirements in Section 312000 "Earthwork" for installation of backfill materials.

a. Place minimum 3 inches of sand as a bed for duct. Place sand to a minimum of 6 inches above top level of duct.
b. Place minimum 6 inches of engineered fill above concrete encasement of duct.

M. Warning Planks: Bury warning planks approximately 12 inches above direct-buried duct, placing them 24 inches o.c. Align planks along the width and along the centerline of duct or duct bank. Provide an additional plank for each 12-inch increment of duct-bank width over a nominal 18 inches. Space additional planks 12 inches apart, horizontally.

N. Underground-Line Warning Tape: Bury conducting underground line specified in Section 260553 "Identification for Electrical Systems" no less than 12 inches above all concrete-encased duct and duct banks and approximately 12 inches below grade. Align tape parallel to and within 3 inches of centerline of duct bank. Provide an additional warning tape for each 12-inch increment of duct-bank width over a nominal 18 inches. Space additional tapes 12 inches apart, horizontally.

3.5 INSTALLATION OF CONCRETE MANHOLES, HANDHOLES, AND BOXES

A. Cast-in-Place Manhole Installation:

1. Finish interior surfaces with a smooth-troweled finish.
2. Knockouts for Future Duct Connections: Form and pour concrete knockout panels 1-1/2 to 2 inches thick, arranged as indicated.
3. Comply with requirements in Section 033000 "Cast-in-Place Concrete" for cast-in-place concrete, formwork, and reinforcement.

B. Precast Concrete Handhole and Manhole Installation:

1. Comply with ASTM C891 unless otherwise indicated.
2. Install units level and plumb and with orientation and depth coordinated with connecting duct, to minimize bends and deflections required for proper entrances.

3. Unless otherwise indicated, support units on a level bed of crushed stone or gravel, graded from 1-inch sieve to No. 4 sieve and compacted to same density as adjacent undisturbed earth.

C. Elevations:

1. Manhole Roof: Install with rooftop at least 15 inches below finished grade.
2. Manhole Frame: In paved areas and trafficways, set frames flush with finished grade. Set other manhole frames 1 inch above finished grade.
3. Install handholes with bottom below frost line.
4. Handhole Covers: In paved areas and trafficways, set surface flush with finished grade. Set covers of other handholes 1 inch above finished grade.
5. Where indicated, cast handhole cover frame integrally with handhole structure.

D. Drainage: Install drains in bottom of manholes where indicated. Coordinate with drainage provisions indicated.

E. Manhole Access: Circular opening in manhole roof; sized to match cover size.

1. Manholes with Fixed Ladders: Offset access opening from manhole centerlines to align with ladder.
2. Install chimney, constructed of precast concrete collars and rings, to support cast-iron frame to connect cover with manhole roof opening. Provide moisture-tight masonry joints and waterproof grouting for frame to chimney.

F. Dampproofing: Apply dampproofing to exterior surfaces of manholes and handholes after concrete has cured at least three days. Dampproofing materials and installation are specified in Section 071113 "Bituminous Dampproofing." After ducts are connected and grouted, and before backfilling, dampproof joints and connections, and touch up abrasions and scars. Dampproof exterior of manhole chimneys after mortar has cured at least three days.

G. Hardware: Install removable hardware, including pulling eyes, cable stanchions, and cable arms,as required for installation and support of cables and conductors and as indicated.

H. Fixed Manhole Ladders: Arrange to provide for safe entry with maximum clearance from cables and other items in manholes.

I. Field-Installed Bolting Anchors in Manholes and Concrete Handholes: Do not drill deeper than 3-7/8 inches for manholes and 2 inches for handholes, for anchor bolts installed in the field. Use a minimum of two anchors for each cable stanchion.

3.6 GROUNDING

A. Ground underground ducts and utility structures according to Section 260526 "Grounding and Bonding for Electrical Systems."

3.7 FIELD QUALITY CONTROL

A. Perform the following tests and inspections:

1. Demonstrate capability and compliance with requirements on completion of installation of underground duct, duct bank, and utility structures.
2. Pull solid aluminum or wood test mandrel through duct to prove joint integrity and adequate bend radii, and test for out-of-round duct. Provide a minimum 12-inch-long mandrel equal to duct size minus 1/4 inch. If obstructions are indicated, remove obstructions and retest.
3. Test manhole and handhole grounding to ensure electrical continuity of grounding and bonding connections. Measure and report ground resistance as specified in Section 260526 "Grounding and Bonding for Electrical Systems."

B. Correct deficiencies and retest as specified above to demonstrate compliance.

C. Prepare test and inspection reports.

3.8 CLEANING

A. Pull leather-washer-type duct cleaner, with graduated washer sizes, through full length of duct until duct cleaner indicates that duct is clear of dirt and debris. Follow with rubber duct swab for final cleaning and to assist in spreading lubricant throughout ducts.

B. Clean internal surfaces of manholes, including sump.

1. Sweep floor, removing dirt and debris.
2. Remove foreign material.

END OF SECTION 260543

© 2023 CDM Smith
All Rights Reserved

SECTION 260544 - SLEEVES AND SLEEVE SEALS FOR ELECTRICAL RACEWAYS AND CABLING

PART 1 - GENERAL

1.1 RELATED DOCUMENTS

A. Drawings and general provisions of the Contract, including General and Supplementary Conditions and Division 01 Specification Sections, apply to this Section.

1.2 SUMMARY

A. Section Includes:

1. Sleeves for raceway and cable penetration of non-fire-rated construction walls and floors.
2. Sleeve-seal systems.
3. Sleeve-seal fittings.
4. Grout.
5. Silicone sealants.

1.3 ACTION SUBMITTALS

A. Product Data: For each type of product.

PART 2 - PRODUCTS

2.1 SLEEVES

A. Wall Sleeves:

1. Steel Pipe Sleeves: ASTM A53/A53M, Type E, Grade B, Schedule 40, zinc coated, plain ends.
2. Cast-Iron Pipe Sleeves: Cast or fabricated "wall pipe," equivalent to ductile-iron pressure pipe, with plain ends and integral waterstop unless otherwise indicated.

B. Sleeves for Conduits Penetrating Non-Fire-Rated Gypsum Board Assemblies: Galvanized-steel sheet; 0.0239-inch minimum thickness; round tube closed with welded longitudinal joint, with tabs for screw-fastening the sleeve to the board.

C. PVC-Pipe Sleeves: ASTM D1785, Schedule 40.

D. Molded-PVC Sleeves: With nailing flange for attaching to wooden forms.

E. Molded-PE or -PP Sleeves: Removable, tapered-cup shaped, and smooth outer surface with nailing flange for attaching to wooden forms.

F. Sleeves for Rectangular Openings:

1. Material: Galvanized sheet steel.
2. Minimum Metal Thickness:

a. For sleeve cross-section rectangle perimeter less than 50 inches and with no side larger than 16 inches, thickness shall be 0.052 inch.
b. For sleeve cross-section rectangle perimeter 50 inches or more and one or more sides larger than 16 inches, thickness shall be 0.138 inch.

2.2 SLEEVE-SEAL SYSTEMS

A. Description: Modular sealing device, designed for field assembly, to fill annular space between sleeve and raceway or cable.

1. Manufacturers: Subject to compliance with requirements, provide products by one of the following:

a. BWM Company.
b. CALPICO, Inc.
c. GPT; a division of EnPRO Industries.

2. Sealing Elements: EPDM rubber interlocking links shaped to fit surface of pipe. Include type and number required for pipe material and size of pipe.
3. Pressure Plates: Carbon steel.
4. Connecting Bolts and Nuts: Stainless steel of length required to secure pressure plates to sealing elements.

2.3 GROUT

A. Description: Nonshrink; recommended for interior and exterior sealing openings in non-fire-rated walls or floors.

B. Standard: ASTM C1107/C1107M, Grade B, post-hardening and volume-adjusting, dry, hydraulic-cement grout.

C. Design Mix: 5,000-psi, 28-day compressive strength.

D. Packaging: Premixed and factory packaged.

PART 3 - EXECUTION

3.1 SLEEVE INSTALLATION FOR NON-FIRE-RATED ELECTRICAL PENETRATIONS

A. Comply with NECA 1.

B. Comply with NEMA VE 2 for cable tray and cable penetrations.

C. Sleeves for Conduits Penetrating Above-Grade Non-Fire-Rated Concrete and Masonry-Unit Floors and Walls:

1. Use pipe sleeves unless penetration arrangement requires rectangular sleeved opening.
2. Size pipe sleeves to provide 1/4-inch annular clear space between sleeve and raceway or cable unless sleeve seal is to be installed.
3. Install sleeves for wall penetrations unless core-drilled holes or formed openings are used. Install sleeves during erection of walls. Cut sleeves to length for mounting flush with both surfaces of walls. Deburr after cutting.
4. Install sleeves for floor penetrations. Extend sleeves installed in floors 2 inches above finished floor level. Install sleeves during erection of floors.

D. Aboveground, Exterior-Wall Penetrations: Seal penetrations using steel pipe sleeves and mechanical sleeve seals. Select sleeve size to allow for 1-inch annular clear space between pipe and sleeve for installing mechanical sleeve seals.

E. Underground, Exterior-Wall and Floor Penetrations: Install cast-iron pipe sleeves. Size sleeves to allow for 1-inch annular clear space between raceway or cable and sleeve for installing sleeve-seal system.

3.2 SLEEVE-SEAL-SYSTEM INSTALLATION

A. Install sleeve-seal systems in sleeves in exterior concrete walls and slabs-on-grade at raceway entries into building.

B. Install type and number of sealing elements recommended by manufacturer for raceway or cable material and size. Position raceway or cable in center of sleeve. Assemble mechanical sleeve seals and install in annular space between raceway or cable and sleeve. Tighten bolts against pressure plates that cause sealing elements to expand and make watertight seal.

3.3 SLEEVE-SEAL-FITTING INSTALLATION

A. Install sleeve-seal fittings in new walls and slabs as they are constructed.

B. Assemble fitting components of length to be flush with both surfaces of concrete slabs and walls. Position waterstop flange to be centered in concrete slab or wall.

C. Secure nailing flanges to concrete forms.

D. Using grout, seal the space around outside of sleeve-seal fittings.

END OF SECTION 260544

This page intentionally left blank.

© 2023 CDM Smith
All Rights Reserved

SECTION 260573 - POWER SYSTEM STUDIES

PART 1 - GENERAL

1.1 RELATED DOCUMENTS

A. Drawings and general provisions of the Contract, including General and Supplementary Conditions and Division 01 Specification Sections, apply to this Section.

1.2 SUMMARY

A. Section includes a computer-based study for:

1. Short circuit report.
2. Protective device coordination report.
3. Motor starting report.
4. Arc flash report.

B. Study encompasses the power distribution system of the Cedar Breaks LS and the D B Wood LS. Cedar Break LS is located at Cedar Breaks Road and D B Wood Road, Georgetown, TX .

C. Study includes the electric utility company's protective devices, emergency generators, service entrance equipment and distribution to low voltage panelboards. All power distribution to that point whether existing or new is included. Equipment included, but not limited to:

1. Panelboards.
2. Motor control centers.
3. Disconnect switches.
4. Transfer switches.
5. 480V control panels.

D. Local electric utility is PEC for Cedar Breaks LS. Local electric utility is Georgetown Electric for D B Wood LS.

E. Obtain all data necessary to perform the study. Data included, but not limited to:

1. Up to date one-line diagrams.
2. Equipment data.
3. Cable sizes and lengths.
4. Existing protective device settings.
5. Electric utility information: available fault current, protective device equipment information and settings, X/R ratios, transformer impedances and ratings.

1.3 DEFINITIONS

A. Boundary, Arc Flash: When an arc flash hazard exists, an approach limit from an arc source at which the incident energy equals 1.2 cal/cm² (5 J/cm²).

B. Boundary, Limited Approach: An approach limit at a distance from an exposed energized electrical conductor or circuit part within which a shock hazard exists.

C. Boundary, Restricted Approach: An approach limit at a distance from an exposed energized electrical conductor or circuit part within which there is an increased likelihood of electric shock, due to electrical arc-over combined with inadvertent movement.

D. Existing to Remain: Existing items of construction that are not to be removed and that are not otherwise indicated to be removed and salvaged, or removed and reinstalled. Existing to remain items shall remain functional throughout the construction period.

E. Field Adjusting Agency: An independent electrical testing agency with full-time employees and the capability to adjust devices and conduct testing indicated and that is a member company of NETA.

F. One-Line Diagram: A diagram that shows, by means of single lines and graphic symbols, the course of an electric circuit or system of circuits and the component devices or parts used therein.

G. Power System Analysis Software Developer: An entity that commercially develops, maintains, and distributes computer software used for power system studies.

H. Power Systems Analysis Specialist: Professional engineer in charge of performing the study and documenting recommendations, licensed in the state where Project is located.

I. Preliminary Short Circuit Report: Report that includes the maximum available utility fault current, proposed equipment, and existing equipment to determine if new equipment may be released for manufacturing and existing equipment is adequate for the calculated short circuit levels.

J. Protective Device: A device that senses when an abnormal current flow exists and then removes the affected portion of the circuit from the system.

K. SCCR: Short-circuit current rating.

L. Service: The conductors and equipment for delivering electric energy from the serving utility to the wiring system of the premises served.

M. Single-Line Diagram: See "One-Line Diagram."

N. Supplier: The person, firm or corporation identified as such to provide the power system study and means the Supplier or its authorized agent. See also Power Systems Analysis Specialist.

1.4 ACTION SUBMITTALS

A. Supplier qualifications per Quality Assurance paragraph. Submit prior to starting study. Include the following:

1. Brief description of each qualifying study.
2. Name of owner of installation on which study was performed with address, telephone number, and contact person.

3. Date of study.
4. Any other information indicating the firm's experiences and ability to perform the work and business status.

B. Preliminary Power System Study Report. Report must be approved prior to release for manufacture of major electrical equipment including but not limited to switchgear, switchboards, distribution panels, and motor control centers. Fault data from the utility must be included and not assumed or submittal will be rejected.

C. Final Power System Study Report. Report must be approved prior to energization of new major electrical equipment. Revise study as required for changes during construction.

1.5 INFORMATIONAL SUBMITTALS

A. Qualification Data:

1. For Power Systems Analysis Software Developer.
2. For Power System Analysis Specialist.
3. For Field Adjusting Agency.

B. If requested, Product Certificates: For power system study software, certifying compliance with IEEE 399, IEEE 1584 and NFPA 70E.

C. Field quality-control reports.

1.6 CLOSEOUT SUBMITTALS

A. Final power system study updated with any changes made after equipment start-up.

B. Digital computer files with full read-write access of the complete power system model and library.

1.7 QUALITY ASSURANCE

A. Perform Study using commercially developed and distributed software designed specifically for power system analysis.

B. Software algorithms shall comply with requirements of standards and guides specified in this Section.

C. Manual calculations are unacceptable.

D. Power System Analysis Software Qualifications:

1. Design computer program to perform short-circuit studies or have a function, component, or add-on module designed to perform short-circuit studies.
2. Develop computer program under the charge of a licensed professional engineer who holds IEEE Computer Society's Certified Software Development Professional certification.

3. Complies with IEEE 399, IEEE 141, IEEE 242, IEEE 519, IEEE 1015, and IEEE 1584 as applicable to the project scope.

E. Power Systems Analysis Specialist Qualifications: Professional engineer licensed in the state where Project is located and has regularly engaged in this electrical engineering study specialty for minimum of five years and has performed at least three projects of similar complexity to this project within the last three years. Perform all elements of the study under the direct supervision and control of this professional engineer.

F. Power System Study Certification: Report shall be signed and sealed by Power Systems Analysis Specialist.

G. Field Adjusting Agency Qualifications:

1. Employer of a NETA ETT-Certified Technician Level III or NICET Electrical Power Testing Level III certification responsible for all field adjusting of the Work.
2. A member company of NETA.
3. Acceptable to authorities having jurisdiction.

PART 2 - PRODUCTS

2.1 POWER SYSTEM ANALYSIS SOFTWARE DEVELOPERS

A. Acceptable Software: Provide by one of the following or equal:

1. SKM System Analysis, Inc.: Power*Tools.
2. Operation Technology, Inc.: ETAP (Electrical Transient Analyzer Program).
3. EasyPower, Inc.: EasyPower.

2.2 POWER SYSTEM STUDY REPORT GENERAL REQUIREMENTS

A. Except for one-line diagrams, standard 8-1/2 -inch by 11-inch pages, with total pages numbered.

B. Electronic PDF format copy with electronic bookmarks for each section.

C. Signed and sealed by a professional engineer registered in the state in which the project is located.

D. Organized in the following order:

1. Executive summary.
2. Short circuit analysis.
3. Short circuit computer printout.
4. Protective device coordination.
5. Motor starting.
6. Arc flash hazard analysis.
7. Harmonic analysis.
8. Utility data.
9. Modeled one line diagrams.

E. Information on one-line diagrams, legible when printed at 11-inch x 17-inch. Show the following:

1. Protective device designations and ampere ratings.
2. Conductor types, sizes, and lengths.
3. Transformer kilovolt ampere (kVA), impedance, and voltage ratings.
4. Motor and generator designations and kVA ratings.
5. Switchgear, switchboard, motor-control center, and panelboard designations and ratings.
6. Derating factors and environmental conditions.
7. Any revisions to electrical equipment required by the study.

F. Identifiers between the one-line diagram, short circuit study, coordination study, and arc flash study to be the same.

G. Include copies of correspondence with electric utility under utility data section of report. Correspondence to include names and contact information.

2.3 EXECUTIVE SUMMARY

A. Include summary of distribution system, information received from electric utility, major assumptions, adequacy of equipment to safely clear or close on any fault, identify problem areas and recommendations for resolving problem areas.

2.4 SHORT CIRCUIT

A. Comply with IEEE 399 and IEEE 551 (new 3002 series).

B. Include normal utility powered configuration, on-site generation configuration, and alternate modes of operation (i.e., alternate utility configuration, bus ties closed).

C. Include minimum and maximum possible fault conditions. Address three-phase bolted as well as ground fault conditions.

D. Consider the fault contribution of all motors operating during the maximum demand condition of the motors.

E. Calculate short-circuit momentary duties and interrupting duties based on an assumed bolted three-phase short circuit at each high and medium voltage switchgear bus and controller, low voltage switchgear bus, switchboard, motor control center, distribution panelboard, pertinent branch circuit panelboard and other significant locations throughout the systems. Include the X/R ratios, asymmetry factors, KVA and symmetrical fault-current in the short circuit tabulations. Provide a ground fault current study for the same system areas. Include in tabulations fault impedance, X/R ratios, asymmetry factors, motor contribution, short circuit KVA, and symmetrical and asymmetrical fault-currents.

F. Include representation of the site power system, the base quantities selected, impedance source data, calculation methods and tabulations, one-line diagrams, conclusions, and recommendations.

G. Identify available fault current at each bus and evaluate system elements including but not limited to equipment, protective devices, and cables.

H. Base current transformers' ratio and burden calculations on a 10 percent maximum ratio error per IEEE C57.13. Identify current transformers that will not allow the protective devices to operate within acceptable IEEE error margins and recommend corrective action.

I. List momentary, interrupting, and/or withstand rating of all key elements of the distribution system along with the maximum available fault current in tabular form and clearly indicate the adequacy of the element with PASS / FAIL designation.

J. Short Circuit Computer Printout:

1. Calculations shall be in sufficient detail for easy review.
2. Back up calculations shall become part of the final report.

2.5 PROTECTIVE DEVICE COORDINATION

A. Comply with IEEE 242 (new 3004 series).

B. Utilize results from the short circuit study and balance the competing objectives of protection and continuity of service for the system specified, considering the basic factors of sensitivity, selectivity and speed. Include all system protective devices in the coordination analysis, not just overcurrent protective devices. This includes, but is not limited to under and over voltage protective relays, frequency relays, differential relays and reverse power relays.

C. Show graphic indication of coordination between protective devices in the form of full color time-current coordination (TCC) plots with each protective device curve in a unique color for easy review.

D. Provide separate TCC plots for each mode of operation. Provide separate TCC plots for "normal" and "stand by" operation. Show maximum fault values in each case. Both power sources shown on one plot is unacceptable.

E. Provide separate TCC for phase over-current and ground fault.

F. Show no more than six devices on one TCC. Of these six curves, two (the largest upstream device and the smallest downstream device) shall repeat curves shown on other coordination plots to provide cross-reference. Designate each TCC with a unique identifier and include each TCC identifier and descriptive title in the study's table of contents.

G. Include in each TCC the following as applicable:

1. TCC name and description.
2. One-line diagram.
3. Identifiers on one-line diagram and curves.
4. Significant motor starting characteristics.
5. Appropriate NEC protection points.
6. Appropriate ANSI/IEEE protection points.
7. Magnetizing inrush points of transformers.
8. Transformer damage curves.
9. Complete operating bands for low voltage circuit breaker trip devices and fuses.
10. Relay coil taps, time-dial settings and pickup settings.
11. Significant symmetrical and asymmetrical fault currents.
12. Power cable withstand curves.
13. Generator short circuit decrement and thermal limit curves.

H. Terminate device characteristic curve on TCC at a point reflecting the maximum symmetrical or asymmetrical fault current to which that device is exposed, based on the short circuit study.

I. Select each primary protective device for a delta-to-wye-connected transformer so the characteristic or operating band is within the transformer parameters; where feasible, include a parameter equivalent to 58 percent of the ANSI C37.91 withstand curve to afford protection for secondary line-to-ground faults.

J. Separate low voltage power circuit breakers from each other and the associated primary protective device, by a 16 percent current margin for coordination and protection in the event of line-to-line faults.

K. Separate protective relays by a 0.3-second time margin for the maximum 3 phase fault conditions to assure proper selectivity.

L. Optimize settings for breakers and relays to provide the most effective protection practicable for all modes and power sources.

M. Include at least all devices down to largest branch circuit and largest feeder circuit breaker in each motor control center and/or power distribution panelboard. Include all adjustable setting ground fault protective devices.

N. Provide tabulations of recommended settings for all protective devices. Where devices are existing, highlight any changes from the existing setting to the proposed recommended setting.

O. Provide all information required to program/set multifunction solid state relays.

2.6 MOTOR STARTING

A. Comply with IEEE 141 (new IEEE 3001 series) for recommended light flicker limits and IEEE 3002.7 for motor starting studies.

B. Provide motor starting study for all large electric drives (100 horsepower and larger). Include all operating modes.

C. Identify any concerns about voltage drop or power inrush limitations due to the starting of motors.

2.7 ARC FLASH HAZARD

A. Comply with IEEE 1584, NFPA 70, and NFPA 70E as applicable.

B. Utilize short circuit and protective device coordination results to provide arc flash hazard analysis. Perform calculations in accordance with IEEE 1584 or NFPA 70E with the method identified within the report.

C. Calculate the incident energy levels at each faulted bus for each mode of operation and for both maximum and minimum fault currents.

D. Include calculations at line side and load side of main breakers, where applicable.

E. Provide tabular report for all modes and conditions and include "worst case" summary. Use the "worst case" to generate the arc flash labels. Include:

1. Fault location.
2. Arcing fault magnitude.
3. Protective device clearing time.
4. Duration of the arc.
5. Arc flash boundary.
6. Working distance.
7. Incident energy.
8. Electrode configuration.

F. Highlight any available incident energy over 40 cal/cm² and provide recommendations to mitigate the hazard.

G. Arc Flash Labels:

1. Machine printed, 4-inch x 4-inch (nominal), thermal transfer, high adhesion polyester.
2. Provide UV resistant laminate for outdoor labels.

H. Arc Flash Label Information:

1. Equipment name.
2. Identifier LINE or LOAD where equipment has potential different energy levels.
3. Arc flash hazard information: arc flash boundary and incident energy in cal/cm².
4. Shock hazard information: limited approach and restricted approach boundaries.
5. Personal Protective Equipment (PPE) requirements.
6. Study Supplier, project number, and date.

I. Provide arc flash label sample with preliminary report.

J. Do not be print the labels until equipment is energized and protective devices set according to the approved final protective device coordination study.

PART 3 - EXECUTION

3.1 POWER SYSTEM DATA

A. Obtain all data necessary for conduct of the study.

1. Verify completeness of data supplied on one-line diagram. Call any discrepancies to Engineer's attention.
2. For equipment included as Work of this Project, use characteristics submitted under provisions of action submittals and information submittals for this Project.

B. Gather and tabulate the required input data to support the power system study.

C. Field data gathering for existing systems shall be under direct supervision and control of the engineer in charge of performing the study and shall be by the engineer or its representative who holds NETA ETT-Certified Technician Level III or NICET Electrical Power Testing Level III certification.

D. Data included, but are not limited to, the following:

1. Product data for overcurrent protective devices and existing settings.
2. Electrical power utility impedance at the service and upstream protective device data.
3. Power sources and ties.
4. For switchgear, switchboards, panelboards, and motor control centers, ampacity and SCCR in amperes RMS symmetrical.
5. For transformers, kVA, primary and secondary voltages, connection type, impedance, X/R ratio, taps measured in percent, and phase shift.
6. For reactors, manufacturer and model designation, voltage rating, and impedance.
7. For circuit breakers, trip units, and fuses, manufacturer, and model designation. List type of breaker, type of trip, SCCR, current rating, and breaker settings.
8. For generators, short-circuit current contribution data, including short-circuit reactance, rated kVA, rated voltage, and X/R ratio.
9. For busways, manufacturer and model designation, current rating, impedance, lengths, and conductor material.
10. For motors, horsepower and NEMA MG 1 code letter designation.
11. Conductor sizes, lengths, number, conductor material, shield parameters for medium voltage cable, and conduit material (magnetic or nonmagnetic).
12. For relays, manufacturer and model designation, current transformer ratios, potential transformer ratios, and relay settings.
13. Derating factors.

3.2 FIELD QUALITY CONTROL

A. Do all testing and adjustment prior to the energization of new equipment.

B. Test existing adjustable protective devices in accordance with NETA MTS.

C. Test new adjustable protective devices in accordance with NETA ATS.

D. Adjust existing and new protective devices according to approved coordination study.

E. Testing and adjusting shall be by a full-time employee of the Field Adjusting Agency, who holds NETA ETT-Certified Technician Level III or NICET Electrical Power Testing Level III certification.

F. After successful testing and adjustment, install calibration sticker with Field Adjusting Agency name, employee initials, and date of calibration at each relay or protective device.

G. After energization, minor adjustments to settings may be required to commission the equipment.

H. Submit field report and list any changes made during field adjustment or commissioning for update for record submittal of study.

3.3 ARC FLASH LABELING

A. After the field adjustment of relays and protective devices, apply arc flash study labels.

B. Apply arc flash labels on the front covers of the following equipment:

1. Panelboards.
2. Motor control centers.
3. Variable frequency controllers.
4. Disconnect switches.
5. Transfer switches.
6. 480V control panels.

C. Apply arc-flash labels at each section for large equipment such as switchgear and motor control centers.

D. Install LINE and LOAD arc-flash labels as applicable.

E. Remove any previous arc flash study labels as applicable and install new labels under the direction of the Power System Analysis Specialist.

END OF SECTION 260573

© 2023 CDM Smith
All Rights Reserved

SECTION 262416 - PANELBOARDS

PART 1 - GENERAL

1.1 RELATED DOCUMENTS

A. Drawings and general provisions of the Contract, including General and Supplementary Conditions and Division 01 Specification Sections, apply to this Section.

1.2 SUMMARY

A. Section Includes:

1. Distribution panelboards.
2. Lighting and appliance branch-circuit panelboards.
3. Load centers.
4. Electronic-grade panelboards.

1.3 DEFINITIONS

A. ATS: Acceptance testing specification.

B. GFCI: Ground-fault circuit interrupter.

C. GFEP: Ground-fault equipment protection.

D. HID: High-intensity discharge.

E. MCCB: Molded-case circuit breaker.

F. SPD: Surge protective device.

G. VPR: Voltage protection rating.

1.4 ACTION SUBMITTALS

A. Product Data: For each type of panelboard.

1. Include materials, switching and overcurrent protective devices, SPDs, accessories, and components indicated.
2. Include dimensions and manufacturers' technical data on features, performance, electrical characteristics, ratings, and finishes.

B. Shop Drawings: For each panelboard and related equipment.

1. Include dimensioned plans, elevations, sections, and details.

2. Show tabulations of installed devices with nameplates, conductor termination sizes, equipment features, and ratings.
3. Detail enclosure types including mounting and anchorage, environmental protection, knockouts, corner treatments, covers and doors, gaskets, hinges, and locks.
4. Detail bus configuration, current, and voltage ratings.
5. Short-circuit current rating of panelboards and overcurrent protective devices.
6. Include evidence of NRTL listing for series rating of installed devices.
7. Include evidence of NRTL listing for SPD as installed in panelboard.
8. Detail features, characteristics, ratings, and factory settings of individual overcurrent protective devices and auxiliary components.
9. Include wiring diagrams for power, signal, and control wiring.
10. Key interlock scheme drawing and sequence of operations.
11. Include time-current coordination curves for each type and rating of overcurrent protective device included in panelboards. Submit on translucent log-log graft paper; include selectable ranges for each type of overcurrent protective device. Include an Internet link for electronic access to downloadable PDF of the coordination curves.

1.5 INFORMATIONAL SUBMITTALS

A. Qualification Data: For testing agency.

B. Panelboard Schedules: For installation in panelboards. Submit final versions after load balancing.

1.6 CLOSEOUT SUBMITTALS

A. Operation and Maintenance Data: For panelboards and components to include in emergency, operation, and maintenance manuals. In addition to items specified in Section 017823 "Operation and Maintenance Data," include the following:

1. Manufacturer's written instructions for testing and adjusting overcurrent protective devices.
2. Time-current curves, including selectable ranges for each type of overcurrent protective device that allows adjustments.

1.7 MAINTENANCE MATERIAL SUBMITTALS

A. Furnish extra materials that match products installed and that are packaged with protective covering for storage and identified with labels describing contents.

1. Keys: Two spares for each type of panelboard cabinet lock.
2. Circuit Breakers Including GFCI and GFEP Types: Two spares for each panelboard.

1.8 QUALITY ASSURANCE

A. Manufacturer Qualifications: ISO 9001 or ISO 9002 certified.

1.9 DELIVERY, STORAGE, AND HANDLING

A. Remove loose packing and flammable materials from inside panelboards; install temporary electric heating (250 W per panelboard) to prevent condensation.

B. Handle and prepare panelboards for installation according to NECA 407.

1.10 FIELD CONDITIONS

A. Environmental Limitations:

1. Do not deliver or install panelboards until spaces are enclosed and weathertight, wet work in spaces is complete and dry, work above panelboards is complete, and temporary HVAC system is operating and maintaining ambient temperature and humidity conditions at occupancy levels during the remainder of the construction period.
2. Rate equipment for continuous operation under the following conditions unless otherwise indicated:

   a. Ambient Temperature: Not exceeding 23 deg F to plus 104 deg F.
   b. Altitude: Not exceeding 6,600 feet.

B. Service Conditions: NEMA PB 1, usual service conditions, as follows:

1. Ambient temperatures within limits specified.
2. Altitude not exceeding 6,600 feet.

1.11 WARRANTY

A. Manufacturer's Warranty: Manufacturer agrees to repair or replace panelboards that fail in materials or workmanship within specified warranty period.

1. Panelboard Warranty Period: 18 months from date of Substantial Completion.

B. Special Warranty: Manufacturer's standard form in which manufacturer agrees to repair or replace SPD that fails in materials or workmanship within specified warranty period.

1. SPD Warranty Period: Five years from date of Substantial Completion.

PART 2 - PRODUCTS

2.1 PANELBOARDS AND LOAD CENTERS COMMON REQUIREMENTS

A. Fabricate and test panelboards according to IEEE 344.

B. Product Selection for Restricted Space: Drawings indicate maximum dimensions for panelboards including clearances between panelboards and adjacent surfaces and other items. Comply with indicated maximum dimensions.

C. Electrical Components, Devices, and Accessories: Listed and labeled as defined in NFPA 70, by a qualified testing agency, and marked for intended location and application.

D. Comply with NEMA PB 1.

E. Comply with NFPA 70.

F. Enclosures: Surface-mounted, dead-front cabinets.

1. Rated for environmental conditions at installed location.

   a. Outdoor Locations: NEMA 250, Type 4X, stainless steel.

2. Height: 84 inches maximum.
3. Front: Secured to box with concealed trim clamps. For surface-mounted fronts, match box dimensions; for flush-mounted fronts, overlap box. Trims shall cover all live parts and shall have no exposed hardware.
4. Hinged Front Cover: Entire front trim hinged to box and with standard door within hinged trim cover. Trims shall cover all live parts and shall have no exposed hardware.
5. Skirt for Surface-Mounted Panelboards: Same gage and finish as panelboard front with flanges for attachment to panelboard, wall, and ceiling or floor.
6. Gutter Extension and Barrier: Same gage and finish as panelboard enclosure; integral with enclosure body. Arrange to isolate individual panel sections.
7. Finishes:

   a. Panels and Trim: Steel, factory finished immediately after cleaning and pretreating with manufacturer's standard two-coat, baked-on finish consisting of prime coat and thermosetting topcoat.
   b. Back Boxes: Galvanized steel.

G. Incoming Mains:

1. Location: Bottom.
2. Main Breaker: Main lug interiors up to 400 amperes shall be field convertible to main breaker.

H. Phase, Neutral, and Ground Buses:

1. Material: Hard-drawn copper, 98 percent conductivity.

   a. Plating shall run entire length of bus.
   b. Bus shall be fully rated the entire length.

2. Interiors shall be factory assembled into a unit. Replacing switching and protective devices shall not disturb adjacent units or require removing the main bus connectors.
3. Equipment Ground Bus: Adequate for feeder and branch-circuit equipment grounding conductors; bonded to box.
4. Full-Sized Neutral: Equipped with full-capacity bonding strap for service entrance applications. Mount electrically isolated from enclosure. Do not mount neutral bus in gutter.
5. Split Bus: Vertical buses divided into individual vertical sections.

I. Conductor Connectors: Suitable for use with conductor material and sizes.

1. Material: Hard-drawn copper, 98 percent conductivity.
2. Terminations shall allow use of 75 deg C rated conductors without derating.
3. Size: Lugs suitable for indicated conductor sizes, with additional gutter space, if required, for larger conductors.
4. Main and Neutral Lugs: Mechanical type, with a lug on the neutral bar for each pole in the panelboard.
5. Ground Lugs and Bus-Configured Terminators: Mechanical type, with a lug on the bar for each pole in the panelboard.
6. Feed-Through Lugs: Mechanical type, suitable for use with conductor material. Locate at opposite end of bus from incoming lugs or main device.

J. NRTL Label: Panelboards or load centers shall be labeled by an NRTL acceptable to authority having jurisdiction for use as service equipment with one or more main service disconnecting and overcurrent protective devices. Panelboards or load centers shall have meter enclosures, wiring, connections, and other provisions for utility metering. Coordinate with utility company for exact requirements.

K. Future Devices: Panelboards or load centers shall have mounting brackets, bus connections, filler plates, and necessary appurtenances required for future installation of devices.

1. Percentage of Future Space Capacity: 5 percent.

L. Panelboard Short-Circuit Current Rating: Rated for series-connected system with integral or remote upstream overcurrent protective devices and labeled by an NRTL. Include label or manual with size and type of allowable upstream and branch devices listed and labeled by an NRTL for series-connected short-circuit rating.

1. Panelboards rated 240 V or less shall have short-circuit ratings as shown on Drawings, but not less than 10,000 A rms symmetrical.
2. Panelboards rated above 240 V and less than 600 V shall have short-circuit ratings as shown on Drawings, but not less than 14,000 A rms symmetrical.

M. Panelboard Short-Circuit Current Rating: Fully rated to interrupt symmetrical short-circuit current available at terminals. Assembly listed by an NRTL for 100 percent interrupting capacity.

1. Panelboards and overcurrent protective devices rated 240 V or less shall have short-circuit ratings as shown on Drawings, but not less than 10,000 A rms symmetrical.
2. Panelboards and overcurrent protective devices rated above 240 V and less than 600 V shall have short-circuit ratings as shown on Drawings, but not less than 14,000 A rms symmetrical.

2.2 PERFORMANCE REQUIREMENTS

A. Seismic Performance: Panelboards shall withstand the effects of earthquake motions determined according to ASCE/SEI 7.

1. The term "withstand" means "the unit will remain in place without separation of any parts from the device when subjected to the seismic forces specified."

B. Surge Suppression: Factory installed as an integral part of indicated panelboards, complying with UL 1449 SPD Type 2.

2.3 POWER PANELBOARDS

A. Manufacturers: Subject to compliance with requirements, provide products by one of the following, but are not limited to the following:

1. ABB, Electrification Business.
2. Eaton.
3. Siemens Industry, Inc., Energy Management Division.
4. Square D; Schneider Electric USA.

B. Panelboards: NEMA PB 1, distribution type.

C. Doors: Secured with vault-type latch with tumbler lock; keyed alike.

1. For doors more than 36 inches high, provide two latches, keyed alike.

D. Mains: Circuit breaker.

E. Branch Overcurrent Protective Devices for Circuit-Breaker Frame Sizes 125 A and Smaller: Plug-in circuit breakers.

F. Branch Overcurrent Protective Devices for Circuit-Breaker Frame Sizes Larger Than 125 A: Bolt-on circuit breakers or Plug-in circuit breakers where individual positive-locking device requires mechanical release for removal.

2.4 LIGHTING AND APPLIANCE BRANCH-CIRCUIT PANELBOARDS

A. Manufacturers: Subject to compliance with requirements, provide products by one of the following, but are not limited to the following:

1. ABB, Electrification Business.
2. Eaton.
3. Siemens Industry, Inc., Energy Management Division.
4. Square D; Schneider Electric USA.

B. Panelboards: NEMA PB 1, lighting and appliance branch-circuit type.

C. Mains: Circuit breaker.

D. Branch Overcurrent Protective Devices: Bolt-on circuit breakers, replaceable without disturbing adjacent units.

E. Doors: Door-in-door construction with concealed hinges; secured with multipoint latch with tumbler lock; keyed alike. Outer door shall permit full access to the panel interior. Inner door

shall permit access to breaker operating handles and labeling, but current carrying terminals and bus shall remain concealed.

2.5 ELECTRONIC-GRADE PANELBOARDS

A. Manufacturers: Subject to compliance with requirements, available manufacturers offering products that may be incorporated into the Work include, but are not limited to the following:

1. ABB, Electrification Business.
2. Eaton.
3. Siemens Industry, Inc., Energy Management Division.
4. Square D; Schneider Electric USA.

B. Panelboards: NEMA PB 1; with factory-installed, integral SPD; labeled by an NRTL for compliance with UL 67 and UL 1449 after installing SPD.

C. Doors: Secured with vault-type latch with tumbler lock; keyed alike.

D. Main Overcurrent Protective Devices: Bolt-on thermal-magnetic circuit breakers.

E. Branch Overcurrent Protective Devices: Bolt-on thermal-magnetic circuit breakers.

F. SPD.

1. Peak Surge Current Rating: The minimum single-pulse surge current withstand rating per phase shall not be less than 100 kA. The peak surge current rating shall be the arithmetic sum of the ratings of the individual MOVs in a given mode.
2. Protection modes and UL 1449 VPR for grounded wye circuits with 208Y/120 V, three-phase, four-wire circuits shall not exceed the following:

   a. Line to Neutral: 700 V for 208Y/120 V.
   b. Line to Ground: 700 V for 208Y/120 V.
   c. Neutral to Ground: 700 V for 208Y/120 V.
   d. Line to Line: 1200 V for 208Y/120 V.

3. Protection modes and UL 1449 VPR for 240/120-V, single-phase, three-wire circuits shall not exceed the following:

   a. Line to Neutral: 700 V.
   b. Line to Ground: 700 V.
   c. Neutral to Ground: 700 V.
   d. Line to Line: 1200 V.

4. SCCR: Equal to the SCCR of the panelboard in which installed or exceed 200 kA.
5. Inominal Rating: 20 kA.

G. Buses:

1. Copper phase and neutral buses; 200 percent capacity neutral bus and lugs.
2. Copper equipment and isolated ground buses.

2.6 DISCONNECTING AND OVERCURRENT PROTECTIVE DEVICES

A. Manufacturers: Subject to compliance with requirements, available manufacturers offering products that may be incorporated into the Work include, but are not limited to the following:

1. ABB, Electrification Business.
2. Eaton.
3. Siemens Industry, Inc., Energy Management Division.
4. Square D; Schneider Electric USA.

B. MCCB: Comply with UL 489, with interrupting capacity to meet available fault currents.

1. Thermal-Magnetic Circuit Breakers:

    a. Inverse time-current element for low-level overloads.
    b. Instantaneous magnetic trip element for short circuits.
    c. Adjustable magnetic trip setting for circuit-breaker frame sizes 250 A and larger.

2. Adjustable Instantaneous-Trip Circuit Breakers: Magnetic trip element with front-mounted, field-adjustable trip setting.
3. Electronic Trip Circuit Breakers:

    a. RMS sensing.
    b. Field-replaceable rating plug or electronic trip.
    c. Digital display of settings, trip targets, and indicated metering displays.
    d. Multi-button keypad to access programmable functions and monitored data.
    e. Ten-event, trip-history log. Each trip event shall be recorded with type, phase, and magnitude of fault that caused the trip.
    f. Integral test jack for connection to portable test set or laptop computer.
    g. Field-Adjustable Settings:

        1) Instantaneous trip.
        2) Long- and short-time pickup levels.
        3) Long- and short-time adjustments.
        4) Ground-fault pickup level, time delay, and I squared T response.

4. Current-Limiting Circuit Breakers: Frame sizes 400 A and smaller; let-through ratings less than NEMA FU 1, RK-5.
5. GFCI Circuit Breakers: Single- and double-pole configurations with Class A ground-fault protection (6-mA trip).
6. GFEP Circuit Breakers: Class B ground-fault protection (30-mA trip).
7. MCCB Features and Accessories:

    a. Standard frame sizes, trip ratings, and number of poles.
    b. Breaker handle indicates tripped status.
    c. UL listed for reverse connection without restrictive line or load ratings.
    d. Lugs: Mechanical style, suitable for number, size, trip ratings, and conductor materials.
    e. Rating Plugs: Three-pole breakers with ampere ratings greater than 150 amperes shall have interchangeable rating plugs or electronic adjustable trip units.

f. Handle Padlocking Device: Fixed attachment, for locking circuit-breaker handle in off position.

2.7 IDENTIFICATION

A. Panelboard Label: Manufacturer's name and trademark, voltage, amperage, number of phases, and number of poles shall be located on the interior of the panelboard door.

B. Breaker Labels: Faceplate shall list current rating, UL and IEC certification standards, and AIC rating.

C. Circuit Directory: Directory card inside panelboard door, mounted in transparent card holder.

1. Circuit directory shall identify specific purpose with detail sufficient to distinguish it from all other circuits.

2.8 ACCESSORY COMPONENTS AND FEATURES

A. Accessory Set: Include tools and miscellaneous items required for overcurrent protective device test, inspection, maintenance, and operation.

B. Portable Test Set: For testing functions of solid-state trip devices without removing from panelboard. Include relay and meter test plugs suitable for testing panelboard meters and switchboard class relays.

PART 3 - EXECUTION

3.1 EXAMINATION

A. Verify actual conditions with field measurements prior to ordering panelboards to verify that equipment fits in allocated space in, and comply with, minimum required clearances specified in NFPA 70.

B. Receive, inspect, handle, and store panelboards according to NECA 407.

C. Examine panelboards before installation. Reject panelboards that are damaged, rusted, or have been subjected to water saturation.

D. Examine elements and surfaces to receive panelboards for compliance with installation tolerances and other conditions affecting performance of the Work.

E. Proceed with installation only after unsatisfactory conditions have been corrected.

3.2 INSTALLATION

A. Coordinate layout and installation of panelboards and components with other construction that penetrates walls or is supported by them, including electrical and other types of equipment,

raceways, piping, encumbrances to workspace clearance requirements, and adjacent surfaces. Maintain required workspace clearances and required clearances for equipment access doors and panels.

B. Comply with NECA 1.

C. Install panelboards and accessories according to NECA 407.

D. Equipment Mounting:

1. Install panelboards on cast-in-place concrete equipment base(s). Comply with requirements for equipment bases and foundations specified in Section 033000 "Cast-in-Place Concrete."
2. Attach panelboard to the vertical finished or structural surface behind the panelboard.
3. Comply with requirements for seismic control devices specified in Section 260548.16 "Seismic Controls for Electrical Systems."

E. Comply with mounting and anchoring requirements specified in Section 260548.16 "Seismic Controls for Electrical Systems."

F. Mount top of trim 90 inches above finished floor unless otherwise indicated.

G. Mount panelboard cabinet plumb and rigid without distortion of box.

H. Mount surface-mounted panelboards to steel slotted supports 5/8 inch in depth. Orient steel slotted supports vertically.

I. Install overcurrent protective devices and controllers not already factory installed.

1. Set field-adjustable, circuit-breaker trip ranges.
2. Tighten bolted connections and circuit breaker connections using calibrated torque wrench or torque screwdriver per manufacturer's written instructions.

J. Make grounding connections and bond neutral for services and separately derived systems to ground. Make connections to grounding electrodes, separate grounds for isolated ground bars, and connections to separate ground bars.

K. Install filler plates in unused spaces.

L. Arrange conductors in gutters into groups and bundle and wrap with wire ties after completing load balancing.

M. Mount spare fuse cabinet in accessible location.

3.3 IDENTIFICATION

A. Identify field-installed conductors, interconnecting wiring, and components; install warning signs complying with requirements in Section 260553 "Identification for Electrical Systems."

B. Create a directory to indicate installed circuit loads; incorporate Owner's final room designations. Obtain approval before installing. Handwritten directories are not acceptable. Install directory inside panelboard door.

C. Panelboard Nameplates: Label each panelboard with a nameplate complying with requirements for identification specified in Section 260553 "Identification for Electrical Systems."

D. Device Nameplates: Label each branch circuit device in power panelboards with a nameplate complying with requirements for identification specified in Section 260553 "Identification for Electrical Systems."

E. Install warning signs complying with requirements in Section 260553 "Identification for Electrical Systems" identifying source of remote circuit.

3.4 FIELD QUALITY CONTROL

A. Perform tests and inspections.

1. Manufacturer's Field Service: Engage a factory-authorized service representative to inspect components, assemblies, and equipment installations, including connections, and to assist in testing.

B. Acceptance Testing Preparation:

1. Test insulation resistance for each panelboard bus, component, connecting supply, feeder, and control circuit.
2. Test continuity of each circuit.

C. Tests and Inspections:

1. Perform each visual and mechanical inspection and electrical test for low-voltage air circuit breakers and low-voltage surge arrestors stated in NETA ATS, Paragraph 7.6 Circuit Breakers and Paragraph 7.19.1 Surge Arrestors, Low-Voltage. Do not perform optional tests. Certify compliance with test parameters.
2. Correct malfunctioning units on-site, where possible, and retest to demonstrate compliance; otherwise, replace with new units and retest.
3. Perform the following infrared scan tests and inspections and prepare reports:

a. Initial Infrared Scanning: After Substantial Completion, but not more than 60 days after Final Acceptance, perform an infrared scan of each panelboard. Remove front panels so joints and connections are accessible to portable scanner.
b. Follow-up Infrared Scanning: Perform an additional follow-up infrared scan of each panelboard 11 months after date of Substantial Completion.
c. Instruments and Equipment:

1) Use an infrared scanning device designed to measure temperature or to detect significant deviations from normal values. Provide calibration record for device.

D. Panelboards will be considered defective if they do not pass tests and inspections.

E. Prepare test and inspection reports, including a certified report that identifies panelboards included and that describes scanning results, with comparisons of the two scans. Include notation of deficiencies detected, remedial action taken, and observations after remedial action.

3.5 ADJUSTING

A. Adjust moving parts and operable components to function smoothly, and lubricate as recommended by manufacturer.

B. Set field-adjustable circuit-breaker trip ranges as indicated.

C. Load Balancing: After Substantial Completion, but not more than 60 days after Final Acceptance, measure load balancing and make circuit changes. Prior to making circuit changes to achieve load balancing, inform Engineer of effect on phase color coding.

1. Measure loads during period of normal facility operations.
2. Perform circuit changes to achieve load balancing outside normal facility operation schedule or at times directed by the Engineer. Avoid disrupting services such as fax machines and on-line data processing, computing, transmitting, and receiving equipment.
3. After changing circuits to achieve load balancing, recheck loads during normal facility operations. Record load readings before and after changing circuits to achieve load balancing.
4. Tolerance: Maximum difference between phase loads, within a panelboard, shall not exceed 20 percent.

3.6 PROTECTION

A. Temporary Heating: Prior to energizing panelboards, apply temporary heat to maintain temperature according to manufacturer's written instructions.

END OF SECTION 262416

© 2023 CDM Smith
All Rights Reserved

SECTION 262419 - MOTOR CONTROL CENTERS

PART 1 - GENERAL

1.1 RELATED DOCUMENTS

A. Drawings and general provisions of the Contract, including General and Supplementary Conditions and Division 01 Specification Sections, apply to this Section.

1.2 SUMMARY

A. Section includes MCCs for use with ac circuits rated 600 V and less, with combination controllers and having the following factory-installed components:

1. Feeder-tap units.
2. Measurement and control.
3. Auxiliary devices.
4. Panelboards.
5. Transformers.

1.3 DEFINITIONS

A. CPT: Control power transformer.

B. MCC: Motor-control center.

C. MCCB: Molded-case circuit breaker.

D. MCP: Motor-circuit protector.

E. OCPD: Overcurrent protective device.

F. PID: Control action; proportional plus integral plus derivative.

G. PT: Potential transformer.

H. SPD: Surge protective device.

I. SCR: Silicon-controlled rectifier.

J. VFC: Variable-frequency controller.

K. Low Voltage: As defined in NFPA 70 for circuits and equipment operating at less than 50 V or for remote-control, signaling power-limited circuits.

1.4 ACTION SUBMITTALS

A. Product Data: For each type of product.

1. Include construction details, material descriptions, dimensions of individual components and profiles, and finishes for MCCs.
2. Include rated capacities, operating characteristics, electrical characteristics, and furnished specialties and accessories for each cell of the MCC.

B. Shop Drawings: For each MCC, manufacturer's approval drawings as defined in UL 845. In addition to requirements specified in UL 845, include dimensioned plans, elevations, and sections; and conduit entry locations and sizes, mounting arrangements, and details, including required clearances and service space around equipment.

1. Show tabulations of installed devices, equipment features, and ratings. Include the following:

a. Each installed unit's type and details.
b. Factory-installed devices.
c. Enclosure types and details.
d. Nameplate legends.
e. Short-circuit current (withstand) rating of complete MCC, and for bus structure and each unit.
f. Features, characteristics, ratings, and factory settings of each installed controller and feeder device, and installed devices.
g. Specified optional features and accessories.

2. Schematic and Connection Wiring Diagrams: For power, signal, and control wiring for each installed controller.
3. Nameplate legends.
4. Vertical and horizontal bus capacities.
5. Features, characteristics, ratings, and factory settings of each installed unit.

1.5 INFORMATIONAL SUBMITTALS

A. Standard Drawings: For each MCC, as defined in UL 845.

B. Qualification Data: For testing agency.

C. Seismic Qualification Data: Certificates, for MCCs, accessories, and components, from manufacturer.

1. Basis for Certification: Indicate whether withstand certification is based on actual test of assembled components or on calculation.
2. Dimensioned Outline Drawings of Equipment Unit: Identify center of gravity and locate and describe mounting and anchorage provisions.
3. Detailed description of equipment anchorage devices on which the certification is based and their installation requirements.

D. Product Certificates: For each MCC.

E. Source quality-control reports.

F. Field quality-control reports.

G. Load-Current and Overload Relay Heater List: Compile after motors have been installed, and arrange to demonstrate that selection of heaters suits actual motor nameplate full-load currents.

H. Load-Current and List of Settings of Adjustable Overload Relays: Compile after motors have been installed, and arrange to demonstrate that switch settings for motor running overload protection suit actual motors to be protected.

I. Sample Warranty: For special warranty.

1.6 CLOSEOUT SUBMITTALS

A. Operation and Maintenance Data: For MCCs, all installed devices, and components to include in emergency, operation, and maintenance manuals.

1. In addition to items specified in Section 017823 "Operation and Maintenance Data," include the following:
2. Manufacturer's Record Drawings: As defined in UL 845. In addition to requirements specified in UL 845, include field modifications and field-assigned wiring identification incorporated during construction by manufacturer, Contractor, or both.
3. Manufacturer's written instructions for testing and adjusting circuit breaker and MCP trip settings.
4. Manufacturer's written instructions for setting field-adjustable overload relays.
5. Manufacturer's written instructions for testing, adjusting, and reprogramming reduced-voltage, solid-state controllers.
6. Manufacturer's written instructions for testing, adjusting, and reprogramming microprocessor control modules.
7. Manufacturer's written instructions for setting field-adjustable timers, controls, and status and alarm points.

1.7 MAINTENANCE MATERIAL SUBMITTALS

A. Furnish extra materials that match products installed and that are packaged with protective covering for storage and identified with labels describing contents.

1. Power Fuses: Equal to 10 percent of quantity installed for each size and type, but no fewer than three of each size and type.
2. Control Power Fuses: Equal to 10 percent of quantity installed for each size and type, but no fewer than two of each size and type.
3. Indicating Lights: Two of each type and color installed.
4. Auxiliary Contacts: Furnish one spare for each size and type of magnetic controller installed.
5. Power Contacts: Furnish three spares for each size and type of magnetic contactor installed.

1.8 QUALITY ASSURANCE

A. Testing Agency Qualifications: Member company of NETA.

1. Testing Agency's Field Supervisor: Certified by NETA to supervise on-site testing.

B. Source Limitations: Obtain MCCs and controllers of a single type from single source from single manufacturer.

C. Electrical Components, Devices, and Accessories: Listed and labeled as defined in NFPA 70 and marked for intended use.

D. UL Compliance: MCCs shall comply with UL 845 and shall be listed and labeled by a qualified testing agency.

1.9 DELIVERY, STORAGE, AND HANDLING

A. Handle MCCs according to the following:

1. NECA 402, "Recommended Practice for Installing and Maintaining Motor Control Centers."
2. NEMA ICS 2.3, "Instructions for the Handling, Installation, Operation, and Maintenance of Motor Control Centers Rated Not More Than 600 Volts."

B. If stored in space that is not permanently enclosed and air conditioned, remove loose packing and flammable materials from inside MCCs; install temporary electric heating, with at least 250 W per vertical section.

1.10 WARRANTY

A. Special Warranty: Manufacturer's standard form in which manufacturer agrees to repair or replace MCC and SPD that fail in materials or workmanship within specified warranty period.

1. Warranty Period: Five years from date of Substantial Completion.

PART 2 - PRODUCTS

2.1 MANUFACTURERS

A. Manufacturers: Subject to compliance with requirements, available manufacturers offering products that may be incorporated into the Work include, but are not limited to the following:

1. Eaton.
2. ABB, Electrification Business.
3. Siemens Industry, Inc., Energy Management Division.
4. Square D; Schneider Electric USA.

2.2 SYSTEM DESCRIPTION

A. NEMA Compliance: Fabricate and label MCCs to comply with NEMA ICS 18.

B. Ambient Environment Ratings:

1. Ambient Temperature Rating: Not less than 0 deg F and not exceeding 104 deg F, with an average value not exceeding 95 deg F over a 24-hour period.
2. Ambient Storage Temperature Rating: Not less than minus 4 deg F and not exceeding 140 deg F
3. Humidity Rating: Less than 95 percent (noncondensing).
4. Altitude Rating: Not exceeding 6,600 feet, or 3,300 feet if MCC includes solid-state devices.

C. Electrical Components, Devices, and Accessories: Listed and labeled as defined in NFPA 70, by a qualified testing agency, and marked for intended location and application.

2.3 PERFORMANCE REQUIREMENTS

A. Seismic Performance: MCCs shall withstand the effects of earthquake motions determined according to ASCE/SEI 7.

1. The term "withstand" means "the system will remain in place without separation of any parts when subjected to the seismic forces specified and the system will be fully operational after the seismic event."
2. Component Importance Factor: 1.25.
3. Component Amplification Factor: 2.5.
4. Component Response Modification Factor: 3.0.

2.4 MOTOR CONTROL CENTER ENCLOSURES

A. Indoor Enclosures: Freestanding steel cabinets unless otherwise indicated. NEMA 250, Type 1 unless otherwise indicated to comply with environmental conditions at installed location.

B. Outdoor Enclosures: Type 3R, non-walk-in aisle.

1. Finish: Factory-applied finish in manufacturer's standard color; undersurfaces treated with corrosion-resistant undercoating.
2. Enclosure: Downward, rearward sloping roof; bolt-on rear covers for each section, with provisions for padlocking.
3. Doors: Personnel door at each end of aisle, minimum width of 30 inches; opening outwards; with panic hardware and provisions for padlocking.
4. Accessories: Fluorescent luminaires, ceiling mounted; wired to a three-way light switch at each end of aisle; GFCI duplex receptacle; emergency battery pack luminaire installed on wall of aisle midway between personnel doors.
5. Walk-in Aisle Heating and Ventilating:

a. Factory-installed electric unit heater(s), wall or ceiling mounted, with integral thermostat and disconnect and with capacities to maintain switchboard interior temperature of 40 deg F with outside design temperature of plus 23 deg F.

6. Power for Space Heaters, Ventilation, Lighting, and Receptacle: Include a CPT within the switchboard. Supply voltage shall be 120/208-V ac.

2.5 ASSEMBLY

A. Structure:

1. Comply with UL requirements for service entrance equipment.
2. Units up to and including Size 3 shall have drawout mountings with connectors that automatically line up and connect with vertical-section buses while being racked into their normal, energized positions.
3. Units in Type B and Type C MCCs shall have pull-apart terminal strips for external control connections.

B. Compartments: Modular; individual lift-off doors with concealed hinges and quick-captive screw fasteners.

1. Interlock compartment door to require that the disconnecting means is "off" before door can be opened or closed, except by operating a concealed release device.
2. Compartment construction shall allow for removal of units without opening adjacent doors, disconnecting adjacent compartments, or disturbing operation of other units in MCC.
3. Same-size compartments shall be interchangeable to allow rearrangement of units, such as replacing three single units with a unit requiring three spaces, without cutting or welding.

C. Interchangeability: Compartments constructed to allow for removal of units without opening adjacent doors, disconnecting adjacent compartments, or disturbing operation of other units in MCC; same-size compartments to permit interchangeability and ready rearrangement of units, such as replacing three single units with a unit requiring three spaces, without cutting or welding.

D. Wiring Spaces:

1. Vertical wireways in each vertical section for vertical wiring to each unit compartment; supports to hold wiring in place.
2. Horizontal wireways in bottom and top of each vertical section for horizontal wiring between vertical sections; supports to hold wiring in place.

E. Provisions for Future:

1. Compartments marked "future" shall be bused, wired, and equipped with guide rails or equivalent, and ready for insertion of drawout units.
2. Compartments marked "spare" shall include provisions for connection to the vertical bus.

F. Integrated Short-Circuit Rating:

1. Short-Circuit Current Rating for Each Unit: Fully rated; 65 kA.
2. Short-Circuit Current Rating of MCC: Fully rated with its main overcurrent device; 65 kA.

G. Control Power:

1. 120-V ac; obtained from CPT integral with controller; with primary and secondary fuses. The CPT shall be of sufficient capacity to operate integral devices and remotely located pilot, indicating, and control devices.

   a. CPT Spare Capacity: 100 VA.
2. CPT Spare Capacity: 100 VA.

H. Factory-Installed Wiring: Factory installed, with bundling, lacing, and protection included. Use flexible conductors for No. 8 AWG and smaller, for conductors across hinges, and for conductors for interconnections between shipping units.

1. Wiring Class: NEMA ICS 18, Class II, Type B, for starters larger than Size 3 Type B-D, for starters Size 3 and smaller.
2. Control and Load Wiring: Factory installed, with bundling, lacing, and protection included. Use flexible conductors for No. 8 AWG and smaller, for conductors across hinges, and for conductors for interconnections between shipping units.

I. Bus:

1. Main Horizontal and Equipment Ground Buses: Uniform capacity for entire length of MCC's main and vertical sections. Provide for future extensions.
2. Vertical Phase and Equipment Ground Buses: Uniform capacity for entire usable height of vertical sections, except for sections incorporating single units.
3. Phase- and Neutral-Bus Material: Hard-drawn copper of 98 percent minimum conductivity or tin-plated alloy, with mechanical connectors for outgoing conductors.
4. Ground Bus: Hard-drawn copper of 98 percent minimum conductivity, with pressure connector for ground conductors, minimum size 1/4-by-2 inches. Equip with mechanical connectors for outgoing conductors.
5. Neutral Disconnect Link: Bolted, uninsulated, 1/4-by-2-inch copper bus, arranged to connect neutral bus to ground bus.
6. Bus-Bar Insulation: Factory-applied, flame-retardant, tape wrapping of individual bus bars or flame-retardant, spray-applied insulation. Insulation temperature rating shall not be less than 105 deg C.

2.6 MAIN DISCONNECT AND OVERCURRENT PROTECTIVE DEVICE(S)

A. MCCB (to 2500 A): Fixed mounted, manually operated air-circuit breaker. Comply with UL 489.

1. MCCB shall have quick-make, quick-break, over-center switching mechanism that is mechanically trip-free, its position shall be shown by the position of the handle, and manual push-to-trip push button.
2. Solid-state monitoring and tripping system to show system status monitoring, adjustable time-current protection, and shunt trip.

    a. Interchangeable current sensors and timing circuits for adjustable time-current protection settings and status signals.
    b. Trip-setting dials or interchangeable plugs to establish the continuous trip of the circuit breaker. Plugs shall not be interchangeable between frames, and the breaker may not be closed without the plug. With neutral ground-fault sensor.
    c. Time-current adjustments to achieve protective-device coordination as follows:

        1) Adjustable long-time delay.
        2) Adjustable short-time setting and delay to shape the time-current curve.
        3) Adjustable instantaneous setting.
        4) Individually adjustable ground-fault setting and time delay.

    d. Built-in connector to test the long-time delay, instantaneous, and ground-fault functions of the breaker. Provide one test set for testing the installed circuit breakers 225-A frame and higher.
    e. Built-in digital ammeter display, showing load current and tripping cause.

3. Switch operator power shall be from control power specified in "Assembly" Article.

B. MCCB (1600 to 2500 A): Fixed mounted, manually operated air-circuit breaker. Comply with UL 489.

1. MCCB shall have quick-make, quick-break, over-center switching mechanism that is mechanically trip-free, its position shall be indicated by the position of the handle, and manual push-to-trip push button.
2. Solid-state monitoring and tripping system to show system status monitoring, adjustable time-current protection, and shunt trip.

    a. Interchangeable current sensors and timing circuits for adjustable time-current protection settings and status signals.
    b. LED indicators or display, with manual reset, to show reasons of automatic trip.
    c. Display panel to indicate the status of the system circuitry, or give fault location based on automatic diagnosis.
    d. Trip the circuit breaker when closing on a fault.
    e. Time-current adjustments to achieve protective-device coordination as follows:

        1) Adjustable long-delay pickup and time.
        2) Individual adjustments for short-delay pickup, time, and I-squared-t setting.
        3) Adjustable instantaneous pickup.
        4) Individually adjustable ground-fault pickup and time, with I-squared-t setting and ground alarm.

    f. One test kit to test each trip function.
    g. Battery backup for informational displays after automatic trip, with battery status indicator.

3. Switch operator power shall be from control power specified in "Assembly" Article.

C. Surge Suppression: Factory installed as an integral part of the incoming feeder, complying with UL 1449, SPD Type 2.

2.7 MAGNETIC CONTROLLERS

A. Controller Units: Combination controllers.

B. Disconnects:

1. MCP:

a. UL 489, with interrupting capacity complying with available fault currents, instantaneous-only circuit breaker with front-mounted, field-adjustable, short-circuit trip coordinated with motor locked-rotor amperes.
b. Lockable Handle: For three padlocks and interlocks with cover in closed position.
c. Auxiliary contacts "a" and "b" arranged to activate with MCP handle.
d. NC alarm contact that operates only when MCP has tripped.
e. Current-limiting module to increase controller short-circuit current (withstand) rating to 100 kA.

2. MCCB:

a. UL 489, with interrupting capacity to comply with available fault currents; thermal-magnetic MCCB, with inverse time-current element for low-level overloads and instantaneous magnetic trip element for short circuits.
b. Front-mounted, adjustable magnetic trip setting for circuit-breaker frame sizes 250 A and larger.
c. Lockable Handle: For three padlocks and interlocks with cover in closed position.
d. Auxiliary contacts "a" and "b" arranged to activate with MCCB handle.
e. NC alarm contact that operates only when MCCB has tripped.

3. Molded-Case Switch:

a. UL 489, with in-line fuse block for UL 248-8 Class J power fuses (depending on ampere rating), providing an interrupting capacity to comply with available fault currents; MCCB with fixed, high-set instantaneous trip only.
b. Lockable Handle: For three padlocks and interlocks with cover in closed position.
c. Auxiliary contacts "a" and "b" arranged to activate with molded-case switch handle.
d. NC alarm contact that operates only when molded-case switch has tripped.

C. Controllers: Comply with UL 508.

1. Full-Voltage Magnetic Controllers: Electrically held, full voltage, NEMA ICS 2, general purpose, Class A.

a. Classification: Nonreversing.

D. Overload Relays:

1. Solid-State Overload Relays:

a. Switch or dial selectable for motor-running overload protection.
b. Sensors in each phase.
c. Class 10/20 selectable tripping characteristic selected to protect motor against voltage and current unbalance and single phasing.
d. UL 1053 Class II ground-fault protection, with start and run delays to prevent nuisance trip on starting.
e. Analog communication module.

2. NC isolated overload alarm contact.
3. External overload reset push button.

2.8 REDUCED-VOLTAGE SOLID-STATE CONTROLLERS

A. Controller Units: An integrated unit with disconnects, power SCRs, heat sink, microprocessor logic board, door-mounted digital display and keypad, bypass contactor, and overload relays. Comply with UL 508.

1. Suitable for use with NEMA MG 1 Design B, polyphase induction motors.

B. Disconnects:

1. MCP:

a. UL 489, with interrupting capacity complying with available fault currents, instantaneous-only circuit breaker with front-mounted, field-adjustable, short-circuit trip coordinated with motor locked-rotor amperes.
b. Lockable Handle: For three padlocks and interlocks with cover in closed position.
c. Auxiliary contacts "a" and "b" arranged to activate with MCP handle.
d. NC alarm contact that operates only when MCP has tripped.
e. Current-limiting module to increase controller short-circuit current (withstand) rating to 100 kA.

2. MCCB:

a. UL 489, with interrupting capacity to comply with available fault currents; thermal-magnetic MCCB, with inverse time-current element for low-level overloads and instantaneous magnetic trip element for short circuits.
b. Front-mounted, adjustable magnetic trip setting for circuit-breaker frame sizes 250 A and larger.
c. Lockable Handle: For three padlocks and interlocks with cover in closed position.
d. Auxiliary contacts "a" and "b" arranged to activate with MCCB handle.
e. NC alarm contact that operates only when MCCB has tripped.

C. Configuration: Standard duty; nonreversible.

D. Starting Mode: Voltage ramping.

E. Stopping Mode: Coast to stop.

F. Bypass Contactor: Shall operate automatically to bypass the SCRs when the motor has reached rated speed and full voltage is applied to motor. Solid-state controller protective features shall remain active when the bypass relay is in the bypass mode.
   1. Bypass Contactor: NEMA ICS 2, general-purpose, Class A contactor, rated to start the load across the line.
   2. Bypass Contactor Coils: Pressure-encapsulated type; manufacturer's standard operating voltage, matching control power or line voltage, depending on contactor size and line-voltage rating.

G. Acceleration Control: Adjustable, using voltage or current ramp, and adjustable starting torque control with up to 400 percent current limitation for 20 seconds.

H. SCR Bridge: At least two SCRs per phase, for stable and smooth acceleration without external feedback from the motor or driven equipment.

I. Keypad: Front accessible; for programming the controller parameters, functions, and features; shall be manufacturer's standard and include not less than the following functions:

   1. Adjusting motor full-load amperes, as a percentage of the controller's rating.
   2. Adjusting current limitation on starting, as a percentage of the motor full-load current rating.
   3. Adjusting linear acceleration and deceleration ramps, in seconds.
   4. Setting initial torque, as a percentage of the nominal motor torque.
   5. Adjusting torque limit, as a percentage of the nominal motor torque.
   6. Adjusting maximum start time, in seconds.
   7. Adjusting voltage boost, as a percentage of the nominal supply voltage.
   8. Selecting stopping mode and adjusting parameters.
   9. Selecting motor thermal-overload protection class between 5 and 30.
   10. Activating and deactivating protection modes.
   11. Selecting or activating communications modes.

J. Digital Display: Front accessible; for showing motor, controller, and fault status; shall be manufacturer's standard and include not less than the following:

   1. Controller Condition: Ready, starting, running, stopping.
   2. Motor Condition: Amperes, voltage, power factor, power, and thermal state.
   3. Fault Conditions: Controller thermal fault, motor overload alarm and trip, motor underload, overcurrent, shorted SCRs, line or phase loss, phase reversal, and line frequency over or under normal.

K. Controller Diagnostics and Protection:

   1. Microprocessor-based thermal protection system for monitoring SCR and motor thermal characteristics, and providing controller overtemperature and motor overload alarm and trip; settings selectable via the keypad.
   2. Protection from line-side reverse phasing; line-side and motor-side phase loss; motor jam, stall, and underload conditions; and line frequency excursions to over- or under-normal. Accomplish protection by the following:

a. Input isolation contactor that opens when the controller diagnostics detect a faulted solid-state component, or when the motor is stopped.
b. Shunt trip that opens the disconnecting means when the controller diagnostics detect a faulted solid-state component.

L. Remote Output Features:

1. All outputs prewired to terminal blocks.
2. Form C status contacts that change state when controller is running.
3. Form C alarm contacts that change state when a fault condition occurs.

M. Overload Relays:

1. Solid-State Overload Relays:

a. Switch or dial selectable for motor-running overload protection.
b. Sensors in each phase.
c. Class 10/20 selectable tripping characteristic selected to protect motor against voltage and current unbalance and single phasing.
d. UL 1053, Class II ground-fault protection, with start and run delays to prevent nuisance trip on starting.
e. Analog communication module.

N. Optional Features:

1. Analog output for field-selectable assignment of motor operating characteristics; 4- to 20-mA dc.
2. Full-voltage/BYPASS selector switch. Power contacts shall be totally enclosed, double break, made of silver-cadmium oxide, and assembled to allow inspection and replacement without disturbing line or load wiring.

2.9 CONTROLLER-MOUNTED AUXILIARY DEVICES

A. Control-Circuit and Pilot Devices: Factory installed in controller enclosure cover unless otherwise indicated. Comply with NEMA ICS 5.

1. Push Buttons, Pilot Lights, and Selector Switches: Heavy-duty, oil-tight type.

a. Push Buttons: Covered types; momentary contact unless otherwise indicated.
b. Pilot Lights: LED types; push to test.
c. Selector Switches: Rotary type.

B. Elapsed-Time Meters: Heavy duty with digital readout in hours; resettable.

C. Meters: Panel type, 2-1/2-inch minimum size with 90- or 120-degree scale and plus or minus 2 percent accuracy, with selector switches having an off position.

D. Auxiliary Dry Contacts: Reversible NC/NO.

E. Control Relays:

1. Time Delay: Auxiliary and adjustable solid-state time-delay relays.
2. Phase-Failure, Phase-Reversal, and Undervoltage and Overvoltage Relays: Solid-state sensing circuit with isolated output contacts for hard-wired connections and adjustable undervoltage, overvoltage, and time-delay settings.

2.10 MEASUREMENT AND CONTROL DEVICES

A. Instrument Transformers: IEEE C57.13, NEMA EI 21.1, and the following:

1. PTs: IEEE C57.13; 120 V, 60 Hz, single tapped secondary; disconnecting type with integral fuse mountings. Burden and accuracy shall be consistent with connected metering and relay devices.
2. Current Transformers: IEEE C57.13; 5 A, 60 Hz, secondary; wound type; single secondary winding and secondary shorting device. Burden and accuracy shall be consistent with connected metering and relay devices.
3. CPTs: Dry type, mounted in separate compartments for units larger than 3 kVA.
4. Current Transformers for Neutral and Ground-Fault Current Sensing: Connect secondary wiring to ground overcurrent relays, via shorting terminals, for selective tripping of main and tie circuit breaker. Coordinate with feeder circuit-breaker and ground-fault protection.

B. Multifunction Digital-Metering Monitor: Microprocessor-based unit suitable for three- or four-wire systems and with the following features:

1. Listed or recognized by a nationally recognized testing laboratory.
2. Inputs from sensors or 5-A current-transformer secondaries, and potential terminals rated to 600 V.
3. Switch-selectable digital display of the following values with the indicated maximum accuracy tolerances:

   a. Phase Currents, Each Phase: Plus or minus 1 percent.
   b. Phase-to-Phase Voltages, Three Phase: Plus or minus 1 percent.
   c. Phase-to-Neutral Voltages, Three Phase: Plus or minus 1 percent.
   d. Three-Phase Real Power (Megawatts): Plus or minus 2 percent.
   e. Three-Phase Reactive Power (Megavars): Plus or minus 2 percent.
   f. Power Factor: Plus or minus 2 percent.
   g. Frequency: Plus or minus 0.5 percent.
   h. Accumulated Energy, Megawatt Hours: Plus or minus 2 percent; accumulated values unaffected by power outages up to 72 hours.
   i. Megawatt Demand: Plus or minus 2 percent; demand interval programmable from 5 to 60 minutes.
   j. Contact devices to operate remote impulse-totalizing demand meter.

4. Mounting: Display and control unit flush or semi-flush mounted in instrument compartment door.

C. Control Power Fuses: Primary and secondary fuses for current-limiting and overload protection of transformer and fuses for protection of control circuits.

D. Motor Protection Relays

1. Programmable motor protection relays: Solid state, panel mounted, Eaton MP-3000; General Electric Multilin 239, or equal, furnished complete with potential and current transformers, zero sequence ground fault transformer and RTD input module.
2. Provide the following protective functions:

    a. Motor thermal overload, with thermal lockout to prevent trip reset after an overload trip.
    b. Ground fault protection.
    c. Phase current heating model to calculate motor thermal capacity during starting and running states.
    d. Independent running protection during acceleration.
    e. Phase and residual overcurrent elements.
    f. Unbalance/single phase.
    g. Load-loss (undercurrent).
    h. Rapid trip/mechanical jam.
    i. Motor locked/stall protection.

3. Over-temperature protection: provide configurable thermistor or RTD inputs, including alarm and trip settings, and associated TRIP or ALARM outputs. The following functionality shall be provided:

    a. PTC or NTC Thermistor input.
    b. Assign RTD input as "Off", "Stator" or "Bearing" type.
    c. Four different RTD types: 100 Ohm Platinum, 120 Ohm Nickel, 100 Ohm Nickel, or 10 Ohm Copper.
    d. RTD sensor fail alarm.

4. Provide monitoring and metering functions:

    a. Current: RMS Values of per Phase, Percent of Motor Load, Current Unbalance, Ground.
    b. Temperature of each RTD and/or thermistor input.
    c. Provide data in the form of trending or data logger, sampling and recording up to eight actual values at an interval defined by the user. Several parameters shall be trended and graphed at sampling periods ranging from 1 second up to 1 hour. The parameters which can be trended by the Setup software shall be: Phase Currents A, B, and C, Motor Load, Current Unbalance, Ground Current, and Thermal Capacity Used.
    d. The relay shall include one transducer output with a settable DC output range of 0 to 20 mA, 4 to 20 mA or 0 to 1 mA, which may be assigned to motor load, average phase current, thermal capacity, and any of the three optional RTDs.
    e. Latest trip report containing cause, phase, ground, current unbalance, and RTD temperatures.
    f. An immediate Overload Alarm feature shall be provided as an early alert during overload conditions.
    g. The relays shall retain in non-volatile memory, a trip record of the last 5 causes of trip.
    h. The relay shall monitor total motor running time (including start conditions) and the maximum average current present during the last successful start.

i. The relay shall have starter failure detection feature which shall produce an alarm in the event that the motor relay does not detect a starter/breaker open condition after a trip is initiated.
j. The relay shall have the capability to display up to 5 user programmable messages to scan sequentially when the motor relay is left unattended. The user shall be able to select from any setpoint or actual value message to be added to the default message queue. Under normal conditions, if no front panel activity is detected within a settable time, the screen shall sequentially display messages.

5. User Interfaces: Include the following:

a. A large 40-character LCD display, and navigation keys.
b. Indicator LEDs on the front panel which shall provide a quick visual indication of status.
c. Serial communication: two wire RS485 link operating at 1200 – 19200 bps. Open protocol, ModBus RTU for read/write commands shall be included in the relay instruction manual.
d. Five switch inputs shall be provided for setpoint access, emergency restart, external reset, and two user programmable option switches.
e. The relay shall accept AC/DC control power.
f. The relay shall be capable of being set by Windows-based, easy to use, setup graphical terminal interface.

6. To make the data acquisition more efficient, the motor relay shall provide a User Definable Memory Map, which shall allow a remote computer to read up to 120 nonconsecutive data registers by using one Modbus packet. The User Definable Memory Map shall be programmed to join any memory map address to one in the block of consecutive User Map locations, so that they can be accessed by means of these consecutive locations. The User Definable area shall have two sections:

a. A register index area containing 120 actual values or setpoints registers.
b. A Register area containing the data located at the addresses in the Register Index.
c. A simulation feature shall be included to allow testing without the need for external current inputs.

2.11 FEEDER TAP UNITS

A. MCCBs (to 1200 A): Fixed mounted, with inverse time-current element for low-level overloads and instantaneous magnetic trip element for short circuits. Adjustable magnetic trip setting for circuit-breaker frame sizes 250 A and larger. Comply with UL 489, and NEMA AB 3, with interrupting capacity to comply with available fault currents.

1. Adjustable, Instantaneous-Trip Circuit Breakers: Magnetic trip element with front-mounted, field-adjustable trip setting.
2. Electronic Trip Circuit Breakers: Field-replaceable rating plug, rms sensing, with the following field-adjustable settings:

a. Instantaneous trip.
b. Long- and short-time pickup levels.
c. Long- and short-time time adjustments.

d. Ground-fault pickup level, time delay, and I^2t response.

3. With built-in digital ammeter and a digital display, showing tripping cause.
4. Shunt Trip: Trip coil energized from separate circuit, with coil-clearing contact.
5. Undervoltage Trip: Set to operate at 35 to 75 percent of rated voltage without intentional time delay.
6. Auxiliary Contacts: One SPDT switch with "a" and "b" contacts; "a" contacts mimic circuit-breaker contacts, "b" contacts operate in reverse of circuit-breaker contacts.
7. Alarm Switch: One NC contact that operates only when circuit breaker has tripped.
8. Key Interlock Kit: Externally mounted to prohibit circuit-breaker operation; key shall be removable only when circuit breaker is in off position.
9. Zone-Selective Interlocking: Integral with electronic phase-fault trip unit; for interlocking ground-fault phase-fault protection function.
10. Electrical Operator: Remote control for on, off, and reset operations.

2.12 PANELBOARDS

A. Comply with NEMA PB 1.

B. Branch OCPDs for Circuit-Breaker Frame Sizes 125 A and Smaller: Plug-in circuit breakers.

C. Branch OCPDs for Circuit-Breaker Frame Sizes Larger Than 125 A: Bolt-on circuit breakers; or plug-in circuit breakers where individual positive-locking device requires mechanical release for removal.

2.13 TRANSFORMERS

A. Factory-assembled and -tested, air-cooled, two-winding, low-voltage dry-type transformers with primary circuit breaker. Comply with NEMA ST 20.

B. Taps for Transformers Smaller Than 3 kVA: One 5 percent tap above normal full capacity.

C. Taps for Transformers 7.5 to 24 kVA: One 5 percent tap above and one 5 percent tap below normal full capacity.

D. Taps for Transformers 25 kVA and Larger: Two 2.5 percent taps above and two 2.5 percent taps below normal full capacity.

E. Insulation Class: 220 deg C, UL-component-recognized insulation system with a maximum of 115 deg C rise above 40 deg C ambient temperature.

F. Energy Efficiency for Transformers Rated 15 kVA and Larger:

1. Complying with NEMA TP 1, Class 1 efficiency levels.
2. Tested according to NEMA TP 2.

2.14 SOURCE QUALITY CONTROL

A. MCC Testing: Test and inspect MCCs according to requirements in NEMA ICS 18.

B. MCCs will be considered defective if they do not pass tests and inspections.

C. Prepare test and inspection reports.

PART 3 - EXECUTION

3.1 EXAMINATION

A. Examine areas and surfaces to receive MCCs, with Installer present, for compliance with requirements for installation tolerances, and other conditions affecting performance of the Work.

B. Proceed with installation only after unsatisfactory conditions have been corrected.

3.2 INSTALLATION

A. NEMA Industrial Control and Systems Standards: Comply with parts of NEMA ICS 2.3 for installation and startup of MCCs.

B. Floor Mounting: Install MCCs on 4-inch nominal-thickness concrete base. Comply with requirements for concrete base specified in Section 033000 "Cast-in-Place Concrete."

1. Install dowel rods to connect concrete base to concrete floor. Unless otherwise indicated, install dowel rods on 18-inch centers around the full perimeter of concrete base.
2. For supported equipment, install epoxy-coated anchor bolts that extend through concrete base and anchor into structural concrete floor.
3. Place and secure anchorage devices. Use setting drawings, templates, diagrams, instructions, and directions furnished with items to be embedded.
4. Install anchor bolts to elevations required for proper attachment to supported equipment.

C. Seismic Bracing: Comply with requirements specified in Section 260548.16 "Seismic Controls for Electrical Systems."

D. Temporary Lifting Provisions: Remove temporary lifting eyes, channels, and brackets and temporary blocking of moving parts from enclosures and components.

E. Install fuses in each fusible switch.

F. Install fuses in control circuits if not factory installed. Comply with requirements in Section 262813 "Fuses."

G. Install heaters in thermal-overload relays. Select heaters based on actual nameplate full-load amperes after motors have been installed.

H. Install, connect, and fuse thermal-protector monitoring relays furnished with motor-driven equipment.

I. Comply with NECA 1.

3.3 IDENTIFICATION

A. Comply with requirements in Section 260553 "Identification for Electrical Systems" for identification of MCC, MCC components, and control wiring.

1. Identify field-installed conductors, interconnecting wiring, and components.
2. Install required warning signs.
3. Label MCC and each cubicle with engraved nameplate.
4. Label each enclosure-mounted control and pilot device.
5. Mark up a set of manufacturer's connection wiring diagrams with field-assigned wiring identifications and return to manufacturer for inclusion in Record Drawings.

B. Operating Instructions: Frame printed operating instructions for MCCs, including control sequences and emergency procedures. Fabricate frame of finished metal, and cover instructions with clear acrylic plastic. Mount on front of MCCs.

3.4 CONTROL WIRING INSTALLATION

A. Install wiring between enclosed controllers and remote devices. Comply with requirements in Section 260523 "Control-Voltage Electrical Power Cables."

B. Bundle, train, and support wiring in enclosures.

C. Connect selector switches and other automatic-control selection devices where applicable.

1. Connect selector switches to bypass only those manual- and automatic-control devices that have no safety functions when switch is in manual-control position.
2. Connect selector switches within enclosed controller circuit in both manual and automatic positions for safety-type control devices such as low- and high-pressure cutouts, high-temperature cutouts, and motor overload protectors.

3.5 CONNECTIONS

A. Comply with requirements for installation of conduit in Section 260533 "Raceways and Boxes for Electrical Systems." Drawings indicate general arrangement of conduit, fittings, and specialties.

B. Comply with requirements in Section 260526 "Grounding and Bonding for Electrical Systems."

3.6 FIELD QUALITY CONTROL

A. Testing Agency: Engage a qualified testing agency to perform tests and inspections.

B. Manufacturer's Field Service: Engage a factory-authorized service representative to test and inspect components, assemblies, and equipment installations, including connections.

C. Perform tests and inspections with the assistance of a factory-authorized service representative.

D. Acceptance Testing Preparation:

1. Test insulation resistance for each enclosed controller, component, connecting supply, feeder, and control circuit.
2. Test continuity of each circuit.

E. Tests and Inspections:

1. Perform each visual and mechanical inspection and electrical test stated in NETA Acceptance Testing Specification. Certify compliance with test parameters.
2. Operational Test: After electrical circuitry has been energized, start units to confirm proper motor rotation and unit operation.
3. Test and adjust controls and safeties. Replace damaged and malfunctioning controls and equipment.
4. Perform the following infrared (thermographic) scan tests and inspections and prepare reports:

    a. Initial Infrared Scanning: After Substantial Completion, but not more than 60 days after Final Acceptance, perform an infrared scan of each multipole enclosed controller. Remove front panels so joints and connections are accessible to portable scanner.
    b. Follow-up Infrared Scanning: Perform an additional follow-up infrared scan of each multipole enclosed controller 11 months after date of Substantial Completion.
    c. Instruments and Equipment: Use an infrared scanning device designed to measure temperature or to detect significant deviations from normal values. Submit calibration record for device.

5. Test and adjust controls, remote monitoring, and safeties. Replace damaged and malfunctioning controls and equipment.
6. Mark up a set of manufacturer's drawings with all field modifications incorporated during construction and return to manufacturer for inclusion in Record Drawings.

F. MCCs will be considered defective if they do not pass tests and inspections.

G. Prepare test and inspection reports.

3.7 STARTUP SERVICE

A. Engage a factory-authorized service representative to perform startup service.

1. Complete installation and startup checks' according to NETA Acceptance Testing Specification and manufacturer's written instructions.

3.8 ADJUSTING

A. Set field-adjustable switches, auxiliary relays, time-delay relays, timers, and overload relay pickup and trip ranges.

B. Adjust overload relay heaters or settings if power factor correction capacitors are connected to the load side of the overload relays.

C. Adjust the trip settings of MCPs and thermal-magnetic circuit breakers with adjustable, instantaneous trip elements. Initially adjust to six times the motor nameplate full-load amperes and attempt to start motors several times, allowing for motor cool-down between starts. If tripping occurs on motor inrush, adjust settings in increments until motors start without tripping. Do not exceed eight times the motor full-load amperes (or 11 times for NEMA Premium Efficient motors if required). Where these maximum settings do not allow starting of a motor, notify Engineer before increasing settings.

D. Set field-adjustable switches and program microprocessors for required start and stop sequences in reduced-voltage, solid-state controllers.

3.9 DEMONSTRATION

A. Engage a factory-authorized service representative to train Owner's maintenance personnel to adjust, operate, and maintain enclosed controllers, and to use and reprogram microprocessor-based, reduced-voltage, solid-state controllers.

END OF SECTION 262419

© 2023 CDM Smith
All Rights Reserved

SECTION 262726 - WIRING DEVICES

PART 1 - GENERAL

1.1 RELATED DOCUMENTS

A. Drawings and general provisions of the Contract, including General and Supplementary Conditions and Division 01 Specification Sections, apply to this Section.

1.2 SUMMARY

A. Section Includes:

1. Standard-grade receptacles, 125 V, 20 A.
2. GFCI receptacles, 125 V, 20 A.
3. Hazardous (classified) location receptacles.
4. Cord and plug sets.
5. Toggle switches, 120/277 V, 20 A.
6. Wall plates.

1.3 DEFINITIONS

A. AFCI: Arc-fault circuit interrupter.

B. BAS: Building automation system.

C. EMI: Electromagnetic interference.

D. GFCI: Ground-fault circuit interrupter.

E. Pigtail: Short lead used to connect a device to a branch-circuit conductor.

F. RFI: Radio-frequency interference.

G. SPD: Surge protective device.

1.4 ACTION SUBMITTALS

A. Product Data: For each type of product.

B. Shop Drawings: List of legends and description of materials and process used for premarking wall plates.

C. Samples: One for each type of device and wall plate specified, in each color specified.

1.5 INFORMATIONAL SUBMITTALS

A. Field quality-control reports.

1.6 CLOSEOUT SUBMITTALS

A. Operation and Maintenance Data: For wiring devices to include in all manufacturers' packing-label warnings and instruction manuals that include labeling conditions.

PART 2 - PRODUCTS

2.1 GENERAL WIRING-DEVICE REQUIREMENTS

A. Wiring Devices, Components, and Accessories: Listed and labeled as defined in NFPA 70, by a qualified testing agency, and marked for intended location and use.

B. Comply with NFPA 70.

C. RoHS compliant.

D. Comply with NEMA WD 1.

E. Devices for Owner-Furnished Equipment:

1. Receptacles: Match plug configurations.
2. Cord and Plug Sets: Match equipment requirements.

F. Device Color:

1. Wiring Devices Connected to Normal Power System: Ivory unless otherwise indicated or required by NFPA 70 or device listing.

G. Wall Plate Color: For plastic covers, match device color.

H. Source Limitations: Obtain each type of wiring device and associated wall plate from single source from single manufacturer.

2.2 STANDARD-GRADE RECEPTACLES, 125 V, 20 A

A. Duplex Receptacles, 125 V, 20 A:

1. Description: Two-pole, three-wire, and self-grounding.
2. Configuration: NEMA WD 6, Configuration 5-20R.
3. Standards: Comply with UL 498 and FS W-C-596.

2.3 GFCI RECEPTACLES, 125 V, 20 A

A. Tamper- and Weather-Resistant, GFCI Duplex Receptacles, 125 V, 20 A:

1. Description: Integral GFCI with "Test" and "Reset" buttons and LED indicator light. Two-pole, three-wire, and self-grounding. Integral shutters that operate only when a plug is inserted in the receptacle. Square face.
2. Configuration: NEMA WD 6, Configuration 5-15R.
3. Type: Feed through.
4. Standards: Comply with UL 498 and UL 943 Class A.
5. Marking: Listed and labeled as complying with NFPA 70, "Tamper-Resistant Receptacles" and "Receptacles in Damp or Wet Locations" articles.

2.4 HAZARDOUS (CLASSIFIED) LOCATION RECEPTACLES

A. Hazardous (Classified) Locations Receptacles:

1. Description: Pin and sleeve receptacle with matching connector.
2. Class I.

    a. Division: 2.

3. Raintight.
4. Voltage: 120 V ac.
5. Hertz: 60 Hz.
6. Amperage: 20 A.
7. Standards: Comply with NEMA FB 11 and UL 1203.

2.5 CORD AND PLUG SETS

A. Match voltage and current ratings and number of conductors to requirements of equipment being connected.

B. Cord: Rubber-insulated, stranded-copper conductors, with Type SOW-A jacket; with green-insulated grounding conductor and ampacity of at least 130 percent of the equipment rating.

C. Plug: Nylon body and integral cable-clamping jaws. Match cord and receptacle type for connection.

2.6 WALL PLATES

A. Single Source: Obtain wall plates from same manufacturer of wiring devices.

B. Single and combination types shall match corresponding wiring devices.

1. Plate-Securing Screws: Metal with head color to match plate finish.
2. Material for Finished Spaces: 0.035-inch- thick, satin-finished, Type 302 stainless steel 0.05-inch- thick, anodized aluminum.
3. Material for Unfinished Spaces: Galvanized steel.

4. Material for Damp Locations: Thermoplastic with spring-loaded lift cover, and listed and labeled for use in wet and damp locations.

C. Wet-Location, Weatherproof Cover Plates: NEMA 250, complying with Type 3R, weather-resistant, die-cast aluminum with lockable cover.

PART 3 - EXECUTION

3.1 INSTALLATION

A. Comply with NECA 1, including mounting heights listed in that standard, unless otherwise indicated.

B. Coordination with Other Trades:

1. Protect installed devices and their boxes. Do not place wall finish materials over device boxes, and do not cut holes for boxes with routers that are guided by riding against outside of boxes.
2. Keep outlet boxes free of plaster, drywall joint compound, mortar, cement, concrete, dust, paint, and other material that may contaminate the raceway system, conductors, and cables.
3. Install device boxes in brick or block walls so that the cover plate does not cross a joint unless the joint is troweled flush with the face of the wall.
4. Install wiring devices after all wall preparation, including painting, is complete.

C. Conductors:

1. Do not strip insulation from conductors until right before they are spliced or terminated on devices.
2. Strip insulation evenly around the conductor using tools designed for the purpose. Avoid scoring or nicking of solid wire or cutting strands from stranded wire.
3. The length of free conductors at outlets for devices shall comply with NFPA 70, Article 300, without pigtails.
4. Existing Conductors:

   a. Cut back and pigtail, or replace all damaged conductors.
   b. Straighten conductors that remain and remove corrosion and foreign matter.
   c. Pigtailing existing conductors is permitted, provided the outlet box is large enough.

D. Device Installation:

1. Replace devices that have been in temporary use during construction and that were installed before building finishing operations were complete.
2. Keep each wiring device in its package or otherwise protected until it is time to connect conductors.
3. Do not remove surface protection, such as plastic film and smudge covers, until the last possible moment.
4. Connect devices to branch circuits using pigtails that are not less than 6 inches in length.

5. When there is a choice, use side wiring with binding-head screw terminals. Wrap solid conductor tightly clockwise, two-thirds to three-fourths of the way around terminal screw.
6. Use a torque screwdriver when a torque is recommended or required by manufacturer.
7. When conductors larger than No. 12 AWG are installed on 15- or 20-A circuits, splice No. 12 AWG pigtails for device connections.
8. Tighten unused terminal screws on the device.
9. When mounting into metal boxes, remove the fiber or plastic washers used to hold device-mounting screws in yokes, allowing metal-to-metal contact.

E. Receptacle Orientation:

1. Install ground pin of vertically mounted receptacles up, and on horizontally mounted receptacles to the right.

F. Device Plates: Do not use oversized or extra-deep plates. Repair wall finishes and remount outlet boxes when standard device plates do not fit flush or do not cover rough wall opening.

G. Dimmers:

1. Install dimmers within terms of their listing.
2. Verify that dimmers used for fan-speed control are listed for that application.
3. Install unshared neutral conductors on line and load side of dimmers according to manufacturers' device, listing conditions in the written instructions.

H. Arrangement of Devices: Unless otherwise indicated, mount flush, with long dimension vertical and with grounding terminal of receptacles on top. Group adjacent switches under single, multigang wall plates.

I. Adjust locations of floor service outlets and service poles to suit arrangement of partitions and furnishings.

3.2 GFCI RECEPTACLES

A. Install non-feed-through GFCI receptacles where protection of downstream receptacles is not required.

3.3 IDENTIFICATION

A. Comply with Section 260553 "Identification for Electrical Systems."

B. Identify each receptacle with panelboard identification and circuit number. Use hot, stamped, or engraved machine printing with black-filled lettering on face of plate, and durable wire markers or tags inside outlet boxes.

C. Essential Electrical System: Mark receptacles supplied from the essential electrical system to allow easy identification using a self-adhesive label.

3.4 FIELD QUALITY CONTROL

A. Test Instruments: Use instruments that comply with UL 1436.

B. Test Instrument for Receptacles: Digital wiring analyzer with digital readout or illuminated digital-display indicators of measurement.

C. Perform the following tests and inspections with the assistance of a factory-authorized service representative:

1. Test Instruments: Use instruments that comply with UL 1436.
2. Test Instrument for Receptacles: Digital wiring analyzer with digital readout or illuminated digital-display indicators of measurement.

D. Tests for Receptacles:

1. Line Voltage: Acceptable range is 105 to 132 V.
2. Percent Voltage Drop under 15-A Load: A value of 6 percent or higher is unacceptable.
3. Ground Impedance: Values of up to 2 ohms are acceptable.
4. GFCI Trip: Test for tripping values specified in UL 1436 and UL 943.
5. Using the test plug, verify that the device and its outlet box are securely mounted.
6. Tests shall be diagnostic, indicating damaged conductors, high resistance at the circuit breaker, poor connections, inadequate fault-current path, defective devices, or similar problems. Correct circuit conditions, remove malfunctioning units and replace with new ones, and retest as specified above.

E. Wiring device will be considered defective if it does not pass tests and inspections.

F. Prepare test and inspection reports.

END OF SECTION 262726

© 2023 CDM Smith
All Rights Reserved

SECTION 262813 - FUSES

PART 1 - GENERAL

1.1 RELATED DOCUMENTS

A. Drawings and general provisions of the Contract, including General and Supplementary Conditions and Division 01 Specification Sections, apply to this Section.

1.2 SUMMARY

A. Section Includes:

1. Cartridge fuses rated 600 V ac and less for use in the following:

   a. Control circuits.
   b. Motor-control centers.
   c. Panelboards.
   d. Switchboards.
   e. Enclosed controllers.
   f. Enclosed switches.

1.3 ACTION SUBMITTALS

A. Product Data: For each type of product. Include construction details, material descriptions, dimensions of individual components. Include the following for each fuse type indicated:

1. Ambient Temperature Adjustment Information: If ratings of fuses have been adjusted to accommodate ambient temperatures, provide list of fuses with adjusted ratings.

   a. For each fuse having adjusted ratings, include location of fuse, original fuse rating, local ambient temperature, and adjusted fuse rating.
   b. Provide manufacturer's technical data on which ambient temperature adjustment calculations are based.

2. Dimensions and manufacturer's technical data on features, performance, electrical characteristics, and ratings.
3. Current-limitation curves for fuses with current-limiting characteristics.
4. Time-current coordination curves (average melt) and current-limitation curves (instantaneous peak let-through current) for each type and rating of fuse. Submit in electronic format suitable for use in coordination software and in PDF format.
5. Coordination charts and tables and related data.
6. Fuse sizes for elevator feeders and elevator disconnect switches.

1.4 CLOSEOUT SUBMITTALS

A. Operation and Maintenance Data: For fuses to include in emergency, operation, and maintenance manuals. In addition to items specified in Section 017823 "Operation and Maintenance Data," include the following:

1. Ambient temperature adjustment information.
2. Current-limitation curves for fuses with current-limiting characteristics.
3. Time-current coordination curves (average melt) and current-limitation curves (instantaneous peak let-through current) for each type and rating of fuse used on the Project. Submit in electronic format suitable for use in coordination software and in PDF format.
4. Coordination charts and tables and related data.

1.5 MAINTENANCE MATERIAL SUBMITTALS

A. Furnish extra materials that match products installed and that are packaged with protective covering for storage and identified with labels describing contents.

1. Fuses: Equal to 10 percent of quantity installed for each size and type, but no fewer than three of each size and type.

1.6 FIELD CONDITIONS

A. Where ambient temperature to which fuses are directly exposed is less than 0 deg F or more than 100 deg F, apply manufacturer's ambient temperature adjustment factors to fuse ratings.

PART 2 - PRODUCTS

2.1 MANUFACTURERS

A. Source Limitations: Obtain fuses, for use within a specific product or circuit, from single source from single manufacturer.

PART 3 - EXECUTION

3.1 EXAMINATION

A. Examine fuses before installation. Reject fuses that are moisture damaged or physically damaged.

B. Examine holders to receive fuses for compliance with installation tolerances and other conditions affecting performance, such as rejection features.

C. Examine utilization equipment nameplates and installation instructions. Install fuses of sizes and with characteristics appropriate for each piece of equipment.

D. Evaluate ambient temperatures to determine if fuse rating adjustment factors must be applied to fuse ratings.

E. Proceed with installation only after unsatisfactory conditions have been corrected.

3.2 FUSE APPLICATIONS

A. Cartridge Fuses:

1. Service Entrance: Class L, fast acting.
2. Feeders: Class L, fast acting.
3. Motor Branch Circuits: Class RK1, time delay, time delay.
4. Large Motor Branch (601 - 4000 A): Class L, time delay.
5. Power Electronics Circuits: Class J, high speed.
6. Other Branch Circuits: Class RK1, time delay.
7. Control Transformer Circuits: Class CC, time delay, control transformer duty.
8. Provide open-fuse indicator fuses or fuse covers with open fuse indication.

3.3 INSTALLATION

A. Install fuses in fusible devices. Arrange fuses so rating information is readable without removing fuse.

3.4 IDENTIFICATION

A. Install labels complying with requirements for identification specified in Section 260553 "Identification for Electrical Systems" and indicating fuse replacement information inside of door of each fused switch and adjacent to each fuse block, socket, and holder.

END OF SECTION 262813

© 2023 CDM Smith
All Rights Reserved

This page intentionally left blank.

© 2023 CDM Smith
All Rights Reserved

SECTION 262913.06 - SOFT-START MOTOR CONTROLLERS

PART 1 - GENERAL

1.1 RELATED DOCUMENTS

A. Drawings and general provisions of the Contract, including General and Supplementary Conditions and Division 01 Specification Sections, apply to this Section.

1.2 SUMMARY

A. Section includes soft-start motor controllers that are designed for reduced-voltage start and full-voltage run duty.

1. Enclosed soft-start controllers.
2. Enclosures.
3. Accessories.
4. Identification.

1.3 DEFINITIONS

A. CPT: Control power transformer.

B. FLA: Full-load current.

C. MCCB: Molded-case circuit breaker.

D. MCP: Motor circuit protector.

E. NC: Normally closed.

F. NO: Normally open.

G. OCPD: Overcurrent protective device.

H. SCCR: Short-circuit current rating.

I. SCPD: Short-circuit protective device.

J. SCR: Silicon-controlled rectifier.

1.4 ACTION SUBMITTALS

A. Product Data: For each type of product.

1. Include rated capacities, operating characteristics, electrical characteristics, and furnished specialties and accessories.

B. Shop Drawings: For each type of controller.

1. Include plans, elevations, sections, and mounting details.
2. Indicate dimensions, weights, required clearances, and location and size of each field connection.
3. Wire Termination Diagrams and Schedules: Include diagrams for signal and control wiring. Identify terminals and wiring designations and color-codes to facilitate installation, operation, and maintenance. Indicate recommended types, wire sizes, and circuiting arrangements for field-installed wiring, and show circuit protection features. Differentiate between manufacturer-installed and field-installed wiring.
4. Include features, characteristics, ratings, and factory settings of individual OCPD and auxiliary components.

C. Product Schedule: For each enclosed controller.

1. Each installed soft-start controller type.
2. Nationally Recognized Testing Laboratory (NRTL) listing.
3. Factory-installed accessories.
4. Nameplate legends.
5. SCCR of integrated unit.

a. For each combination soft-start controller, include features, characteristics, ratings, and factory setting of the SCPD and OCPD.

1) Listing document proving Type 2 coordination.

b. For each series-rated combination, state the listed integrated SCCR (withstand) of SCPDs and OCPDs by an NRTL acceptable to authorities having jurisdiction.

1.5 INFORMATIONAL SUBMITTALS

A. Qualification Data: For testing agency.

B. Seismic Qualification Data: Certificates, for soft-start controllers, from manufacturer.

1. Basis for Certification: Indicate whether withstand certification is based on actual test of assembled components or on calculation.
2. Dimensioned Outline Drawings of Equipment Unit: Identify center of gravity and locate and describe mounting and anchorage provisions.
3. Detailed description of equipment anchorage devices on which the certification is based and their installation requirements.

C. Source quality-control reports.

D. Field quality-control reports.

1.6 CLOSEOUT SUBMITTALS

A. Operation and Maintenance Data: For soft-start controllers to include in operation and maintenance manuals.

1. In addition to items specified in Section 017823 "Operation and Maintenance Data," include the following:

   a. Routine maintenance requirements for soft-start controllers and installed components.
   b. Manufacturer's written instructions for testing and adjusting circuit-breaker and MCP trip settings.
   c. Manufacturer's written instructions for testing, adjusting, and reprogramming reduced-voltage soft-start controllers.
   d. Load-Current and Overload-Relay Heater List: Compile after motors have been installed, and arrange to demonstrate that selection of heaters suits actual motor nameplate FLAs.
   e. Load-Current and List of Settings of Adjustable Overload Relays: Compile after motors have been installed, and arrange to demonstrate that switch settings for motor running overload protection suit actual motors to be protected.

1.7 MAINTENANCE MATERIAL SUBMITTALS

A. Furnish extra materials that match products installed and that are packaged with protective covering for storage and identified with labels describing contents.

1. Fuses for Fused Switches: Equal to 10 percent of quantity installed for each size and type, but no fewer than three of each size and type.
2. Control Power Fuses: Equal to 10 percent of quantity installed for each size and type, but no fewer than two of each size and type.
3. Indicating Lights: Two of each type and color installed.
4. Auxiliary Contacts: Furnish one spare for each size and type of magnetic controller installed.
5. Power Contacts: Furnish three spares for each size and type of magnetic contactor installed.

1.8 QUALITY ASSURANCE

A. Testing Agency Qualifications: Accredited by NETA.

1. Testing Agency's Field Supervisor: Certified by NETA to supervise on-site testing.

1.9 DELIVERY, STORAGE, AND HANDLING

A. Store soft-start controllers indoors in clean, dry space with uniform temperature to prevent condensation. Protect soft-start controllers from exposure to dirt, fumes, water, corrosive substances, and physical damage.

B. If stored in areas subject to weather, cover soft-start controllers to protect them from weather, dirt, dust, corrosive substances, and physical damage. Remove loose packing and flammable materials from inside controllers; install temporary electric heating, with at least 50 W per controller.

1.10 FIELD CONDITIONS

A. Environmental Limitations: Rate equipment for continuous operation under the following conditions unless otherwise indicated:

1. Ambient Temperature: Not less than 32 deg F and not exceeding 104 deg F, humidity noncondensing.
2. Altitude: Not exceeding 3,300 feet.
3. The effect of solar radiation is insignificant.

PART 2 - PRODUCTS

2.1 MOTOR CONTROLLER PERFORMANCE REQUIREMENTS

A. Electrical Components, Devices, and Accessories: Listed and labeled as defined in NFPA 70, by a qualified testing agency, and marked for intended location and use.

B. UL Compliance: Fabricate and label enclosed controllers to comply with UL 508.

C. NEMA Compliance: Fabricate motor controllers to comply with NEMA ICS 2.

D. Seismic Performance: Soft-start controllers shall withstand the effects of earthquake motions determined according to ASCE/SEI 7.

1. The term "withstand" means "the unit will remain in place without separation of any parts when subjected to the seismic forces specified and the unit will be fully operational after the seismic event."
2. Component Importance Factor: 1.5.

2.2 ENCLOSED SOFT-START MOTOR CONTROLLERS

A. Description: Controllers designed for reduced-voltage start, full-voltage run, and optional soft stop. The controller shall be an integrated unit with power SCRs, heat sink, microprocessor logic board, door-mounted digital display and user interface module, run-bypass contactor, and overload relay(s); suitable for use with NEMA MG 1, Design B, polyphase, medium induction motors.

1. Run-Bypass Contactor: Magnetic contactor in parallel with the SCR of the soft-start controller, bypassing the SCR when full voltage is achieved.

B. Manufacturers: Subject to compliance with requirements, available manufacturers offering products that may be incorporated into the Work include, but are not limited to the following:

1. Eaton.
2. ABB, Electrification Business.
3. Siemens Industry, Inc., Energy Management Division.
4. Square D; Schneider Electric USA.

C. Standard: Comply with NEMA ICS 2, general purpose, Class A.

D. Configuration: Standard duty.

1. At least two SCRs per phase to control the starting and stopping of the motor.
2. Microprocessor control shall continuously monitor current and proper operation of the SCRs.
3. Bypass Contactor: Operates automatically when full voltage is applied to motor, and bypasses the SCRs. Soft-start controller protective features and deceleration controls shall remain active when this contactor is in the bypass mode.
4. Power Electronics Disconnect Contactor. Where indicated, installed ahead of the power electronics equipment, and shall open automatically when the motor is stopped, or a controller fault is detected, or when an SCR shorts.
5. Logic Board: Identical for all ampere ratings and voltage classes, with environmental protective coating.
6. Surge Protection: Comply with NEMA ICS 2 requirements for surge suppression.

E. Control Power:

1. For on-board control power, obtain from line circuit or from integral CPT. The CPT shall have capacity to operate integral devices and remotely located pilot, indicating, and control devices.
2. Spare CPT Capacity: As indicated on Drawings, available in increments of 100 VA, from 100 to 500 VA.

F. Controller Diagnostics and Protection:

1. Microprocessor-based thermal-protection system for monitoring SCR and motor thermal characteristics, and providing controller overtemperature and motor-overload alarm and trip; settings selectable via the keypad.
2. Protection from line-side reverse phasing; line-side and motor-side phase loss; motor jam, stall, and under-load conditions; and line frequency over or under normal.
3. Input isolation contactor that opens when the controller diagnostics detect a faulted soft-start component or when the motor is stopped.

G. Cover mounted-controller status panel with LED lights or alphanumeric display to show the following:

1. Starter Status: "Ready," "starting," "stopping," or "run."
2. Motor current in amperes.
3. Faults:

    a. Motor overcurrent trip.
    b. Motor thermal overload.
    c. Starter thermal fault.
    d. Low line voltage.

e. Loss of a phase.
f. Phases reversed.
g. Maximum stating time exceeded.
h. Serial communications error.

H. Interface Panel: Mounted on controller door.

1. Guarded adjustable set points, not readily accessible.

a. Motor FLA, adjustable from 40 to 110 percent of the controller's rating.
b. Current limitation on starting, adjustable from 200 to 500 percent of FLA, typically set at 300 percent.
c. NEMA ICS 2 overload class. Selections shall include the following tripping classes: Class 5, Class 10, Class 15, Class 20, and Class 30.

2. Adjustable set points, readily accessible, password protected.

a. Linear acceleration, adjustable from 1 to 60 s.
b. Maximum start time, adjustable from 1 to 250 s.
c. Selector switch; select coast to stop or soft stop.
d. Linear deceleration, adjustable from 1 to 60 s.

I. Remote Output Features. All outputs shall be prewired to terminal blocks.

1. Analog output for field-selectable assignment of motor operating characteristics; 4- to 20-mA dc.
2. Form C status contacts that change state when controller is running.
3. Form C alarm contacts that change state when a fault condition occurs.
4. Refer to schematics for additional requirements.

2.3 ENCLOSURES

A. Comply with NEMA 250, Type designations as indicated on Drawings, to comply with environmental conditions at installed location.

B. Construction of the enclosures shall comply with NEMA ICS 6.

C. Controllers in hazardous (classified) locations shall comply with UL 1203.

2.4 ACCESSORIES

A. General Requirements for Control Circuit and Pilot Devices: NEMA ICS 5; factory installed in controller enclosure cover unless otherwise indicated.

1. Push Buttons, Pilot Lights, and Selector Switches: Standard duty, except as needed to match enclosure type. Heavy-duty or oiltight where indicated in the controller schedule.

a. Push Buttons: As indicated in the controller schedule.
b. Pilot Lights: As indicated in the controller schedule.

2. Elapsed Time Meters: Heavy duty with digital readout in hours; resettable.
3. Meters: Panel type, 2-1/2-inch minimum size with 90- or 120-degree scale and plus or minus 2 percent accuracy. Where indicated, provide selector switches with an off position.

2.5 IDENTIFICATION

A. Controller Nameplates: as described in Section 260553 "Identification for Electrical Systems," for each compartment, mounted with corrosion-resistant screws.

B. Arc-Flash Warning Labels:

1. Comply with requirements in Section 260553 "Identification for Electrical Systems." Produce a 3-1/2-by-5-inch self-adhesive equipment label for each work location included in the analysis. Labels shall be machine printed, with no field-applied markings.

a. The label shall have an orange header with the wording, "WARNING, ARC-FLASH HAZARD," and shall include the following information taken directly from the arc-flash hazard analysis:

1) Location designation.
2) Nominal voltage.
3) Flash protection boundary.
4) Hazard risk category.
5) Incident energy.
6) Working distance.
7) Engineering report number, revision number, and issue date.

b. Labels shall be machine printed, with no field-applied markings.

PART 3 - EXECUTION

3.1 EXAMINATION

A. Examine areas and space conditions for compliance with requirements for motor controllers, their relationship with the motors, and other conditions affecting performance of the Work.

3.2 INSTALLATION

A. Comply with NECA 1.

B. Freestanding Controllers: Provide slotted support systems complying with Section 260529 "Hangers and Supports for Electrical Systems."

C. Floor-Mounted Controllers: Install controllers on cast-in-place concrete equipment base(s). Comply with requirements for equipment bases and foundations specified in Section 033000 "Cast-in-Place Concrete."

D. Comply with requirements for seismic control devices specified in Section 260548.16 "Seismic Controls for Electrical Systems."

E. Maintain minimum clearances and workspace at equipment according to manufacturer's written instructions and NFPA 70.

F. Control Wiring: Separate control wiring from power wiring. Where unavoidable, use twisted pair cabling or shielded cables for control wiring.

G. Wiring within Enclosures: Bundle, lace, and train conductors to terminal points with no excess and without exceeding manufacturer's limitations on bending radii. Install lacing bars and distribution spools.

H. Setting of Overload Relays: Select and set overloads on the basis of FLA rating as shown on motor nameplate. Adjust setting value for special motors as required by NFPA 70 for high-torque, high-efficiency, and so on motors.

3.3 IDENTIFICATION

A. Identify system components, wiring, cabling, and terminals. Comply with requirements for identification specified in Section 260553 "Identification for Electrical Systems."

3.4 FIELD QUALITY CONTROL

A. Testing Agency: Engage a qualified testing agency to perform tests and inspections.

B. Manufacturer's Field Service: Engage a factory-authorized service representative to test and inspect components, assemblies, and equipment installations, including connections.

C. Perform tests and inspections with the assistance of a factory-authorized service representative.

D. Tests and Inspections:

1. Comply with provisions of NFPA 70B, Chapter "Testing and Test Methods."
2. Visual and Mechanical Inspection:

    a. Compare equipment nameplate data with Drawings and Specifications.
    b. Inspect physical and mechanical condition.
    c. Inspect anchorage, alignment, and grounding.
    d. Verify that the unit is clean.
    e. Ensure that vent path openings are free from debris and that heat-transfer surfaces are clean.
    f. Verify correct connections of circuit boards, wiring, disconnects, and ribbon cables.
    g. Inspect Contactors:

        1) Verify mechanical operation.
        2) Verify that contact gap, wipe, alignment, and pressure are according to manufacturer's published data.

h. Motor-Running Protection:

1) Verify that motor FLA is at, or under, the controller current rating.
2) Verify that overload element setting is correct for its application.
3) Apply minimum- and maximum-speed set points. Verify that set points are within limitations of the load coupled to the motor.
4) If motor-running protection is provided by fuses, verify correct fuse rating.

i. Inspect bolted electrical connections for high resistance using one of the following two methods:

1) Use a low-resistance ohmmeter. Compare bolted-connection-resistance values to values of similar connections. Investigate values that deviate from those of similar bolted connections by more than 50 percent of the lowest value.
2) Verify tightness of accessible bolted electrical connections by calibrated torque-wrench method according to manufacturer's published data or NETA ATS, Table 100.12. Bolt-torque levels shall be according to manufacturer's published data. In the absence of manufacturer's published data, use NETA ATS, Table 100.12.

j. Verify appropriate lubrication on moving current-carrying parts and on moving and sliding surfaces.

3. Electrical Tests:

a. For the contactor and circuit breaker, perform insulation-resistance tests for one minute on each pole, phase-to-phase and phase-to-ground with switch closed, and across each open pole. Insulation-resistance values shall be according to manufacturer's published data or NETA ATS, Table 100.1. In the absence of manufacturer's published data, use Table 100.5. Values of insulation resistance less than this table or manufacturer's written instructions shall be investigated and corrected.
b. Measure fuse resistance. Investigate fuse-resistance values that deviate from each other by more than 15 percent.
c. Test motor protection devices according to manufacturer's published data.
d. Test circuit breakers as follows:

1) Operate the circuit breaker to ensure smooth operation.
2) For adjustable circuit breakers, adjust protective device settings according to the coordination study. Comply with coordination study recommendations.

e. Test the electronic motor overload relay elements by injecting primary current through the overload circuit and monitoring trip time of the overload element.
f. Test the following parameters according to NETA relay calibration procedures, or as recommended by manufacturer:

1) ANSI No. 49R, Overtemperature Protection:

a) Determine time delay at 300 percent of setting.
b) Determine a second point on the operating curve.

c) Determine pickup.

2) ANSI No. 47, Input Phase Loss and Reversed Phases Protection:

a) Determine positive sequence voltage to close the NO contact.
b) Determine positive sequence voltage to open the NC contact (undervoltage trip).
c) Verify negative sequence trip.
d) Determine time delay to close the NO contact with sudden application of 120 percent of pickup.
e) Determine time delay to close the NC contact on removal of voltage when previously set to rated system voltage.

3) ANSI No. 81, Overfrequency Protection:

a) Verify frequency set points.
b) Determine time delay.
c) Determine undervoltage cutoff.

4) Fault Alarm Outputs: Verify that each relay contact performs its intended function in the control scheme including breaker trip tests, close inhibit tests, lockout tests, and alarm functions.

g. Perform operational tests by initiating control devices.

4. Infrared Inspection: Perform the survey during periods of maximum possible loading. Remove all necessary covers prior to the inspection.

a. Comply with recommendations of NFPA 70B, Chapter "Testing and Test Methods," Article "Infrared Inspection."
b. After Substantial Completion, but not more than 60 days after Final Acceptance, perform infrared inspection of the electrical power connections of each motor controller.
c. Follow-up Infrared Scanning: Perform an additional follow-up infrared scan of each motor controller 11 months after date of Substantial Completion.
d. Report of Infrared Inspection: Prepare a certified report that identifies the testing technician and equipment used, and lists the following results:

1) Description of equipment to be tested.
2) Discrepancies.
3) Temperature difference between the area of concern and the reference area.
4) Probable cause of temperature difference.
5) Areas inspected. Identify inaccessible and unobservable areas and equipment.
6) Identify load conditions at time of inspection.
7) Provide photographs and thermograms of the deficient area.
8) Recommended action.

e. Equipment: Inspect distribution systems with imaging equipment capable of detecting a minimum temperature difference of 1 deg C at 30 deg C. The

equipment shall detect emitted radiation and convert detected radiation to a visual signal.

f. Act on inspection results, recommended action, and considering recommendations of NETA ATS, Table 100.18. Correct possible and probable deficiencies as soon as Owner's operations permit. Retest until deficiencies are corrected.

E. Motor controllers will be considered defective if they do not pass tests and inspections.

F. Prepare test and inspection reports.

3.5 SYSTEM FUNCTION TESTS

A. System function tests shall prove the correct interaction of sensing, processing, and action devices. Perform system function tests after field quality-control tests have been completed and all components have passed specified tests.

1. Develop test parameters and perform tests for the purpose of evaluating performance of integral components and their functioning as a complete unit within design requirements and manufacturer's published data.
2. Verify the correct operation of interlock safety devices for fail-safe functions in addition to design function.
3. Verify the correct operation of sensing devices, alarms, and indicating devices.

B. Motor controllers will be considered defective if they do not pass the system function tests and inspections.

C. Prepare test and inspection reports.

3.6 DEMONSTRATION

A. Engage a factory-authorized service representative to train Owner's maintenance personnel to adjust, operate, and maintain motor controllers.

END OF SECTION 262913.06

© 2023 CDM Smith
All Rights Reserved

This page intentionally left blank.

© 2023 CDM Smith
All Rights Reserved

SECTION 263213.13 - DIESEL EMERGENCY ENGINE GENERATORS

PART 1 - GENERAL

1.1 RELATED DOCUMENTS

A. Drawings and general provisions of the Contract, including General and Supplementary Conditions and Division 01 Specification Sections, apply to this Section.

1.2 SUMMARY

A. Section includes packaged diesel engine generators for emergency use with the following features:

1. Diesel engine.
2. Diesel fuel-oil system.
3. Control and monitoring.
4. Generator overcurrent and fault protection.
5. Generator, exciter, and voltage regulator.
6. Outdoor engine generator enclosure.
7. Vibration isolation devices.
8. Finishes.

B. Related Requirements:

1. Section 263600 "Transfer Switches" for transfer switches, including sensors and relays to initiate automatic-starting and -stopping signals for engine generators.

1.3 DEFINITIONS

A. EPS: Emergency power supply.

B. EPSS: Emergency power supply system.

C. Operational Bandwidth: The total variation, from the lowest to highest value of a parameter over the range of conditions indicated, expressed as a percentage of the nominal value of the parameter.

1.4 ACTION SUBMITTALS

A. Product Data: For each type of product.

1. Include rated capacities, operating characteristics, electrical characteristics, and furnished specialties and accessories.
2. Include thermal damage curve for generator.
3. Include time-current characteristic curves for generator protective device.

4. Include fuel consumption in gallons per hour at 0.8 power factor at 0.5, 0.75, and 1.0 times generator capacity.
5. Include generator efficiency at 0.8 power factor at 0.5, 0.75, and 1.0 times generator capacity.
6. Include airflow requirements for cooling and combustion air in cubic feet per minute at 0.8 power factor, with air-supply temperature of 95, 80, 70, and 50 deg F. Provide Drawings indicating requirements and limitations for location of air intake and exhausts.
7. Include generator characteristics, including, but not limited to, kilowatt rating, efficiency, reactances, and short-circuit current capability.

B. Shop Drawings:

1. Include plans and elevations for engine generator and other components specified. Indicate access requirements affected by height of subbase fuel tank.
2. Include details of equipment assemblies. Indicate dimensions, weights, loads, required clearances, method of field assembly, components, and location and size of each field connection.
3. Identify fluid drain ports and clearance requirements for proper fluid drain.
4. Design calculations for selecting vibration isolators and seismic restraints and for designing vibration isolation bases.
5. Vibration Isolation Base Details: Detail fabrication, including anchorages and attachments to structure and supported equipment. Include base weights.
6. Include diagrams for power, signal, and control wiring. Complete schematic, wiring, and interconnection diagrams showing terminal markings for EPS equipment and functional relationship between all electrical components.

1.5 INFORMATIONAL SUBMITTALS

A. Qualification Data: For manufacturer and testing agency.

B. Seismic Qualification Data: Certificates for engine generator, accessories, and components, from manufacturer.

1. Basis for Certification: Indicate whether withstand certification is based on actual test of assembled components or on calculation.
2. Dimensioned Outline Drawings of Equipment Unit: With engine and generator mounted on rails, identify center of gravity and total weight, including full fuel tank, supplied enclosure, subbase-mounted fuel tank, and each piece of equipment not integral to the engine generator, and locate and describe mounting and anchorage provisions.
3. Detailed description of equipment anchorage devices on which the certification is based and their installation requirements.

C. Source Quality-Control Reports: Including, but not limited to, the following:

1. Certified summary of prototype-unit test report.
2. Certified Test Reports: For components and accessories that are equivalent, but not identical, to those tested on prototype unit.
3. Certified Summary of Performance Tests: Certify compliance with specified requirement to meet performance criteria for sensitive loads.

4. Report of factory test on units to be shipped for this Project, showing evidence of compliance with specified requirements.
5. Report of sound generation.
6. Report of exhaust emissions showing compliance with applicable regulations.
7. Certified Torsional Vibration Compatibility: Comply with NFPA 110.

D. Field quality-control reports.

E. Warranty: For special warranty.

1.6 CLOSEOUT SUBMITTALS

A. Operation and Maintenance Data: For engine generators to include in emergency, operation, and maintenance manuals.

1. In addition to items specified in Section 017823 "Operation and Maintenance Data," include the following:

a. List of tools and replacement items recommended to be stored at Project for ready access. Include part and drawing numbers, current unit prices, and source of supply.
b. Operating instructions laminated and mounted adjacent to generator location.
c. Training plan.

1.7 MAINTENANCE MATERIAL SUBMITTALS

A. Furnish extra materials that match products installed and that are packaged with protective covering for storage and identified with labels describing contents.

1. Fuses: One for every 10 of each type and rating, but no fewer than one of each.
2. Indicator Lamps: Two for every six of each type used, but no fewer than two of each.
3. Filters: One set each of lubricating oil, fuel, and combustion-air filters.
4. Tools: Each tool listed by part number in operations and maintenance manual.

1.8 QUALITY ASSURANCE

A. Installer Qualifications: An authorized representative who is trained and approved by manufacturer.

B. Testing Agency Qualifications: Accredited by NETA.

1. Testing Agency's Field Supervisor: Certified by NETA to supervise on-site testing.

1.9 WARRANTY

A. Manufacturer's Warranty: Manufacturer agrees to repair or replace components of packaged engine generators and associated auxiliary components that fail in materials or workmanship within specified warranty period.

1. Warranty Period: Five years from date of Substantial Completion.

PART 2 - PRODUCTS

2.1 MANUFACTURERS

A. Manufacturers: Subject to compliance with requirements, available manufacturers offering products that may be incorporated into the Work include:

1. Caterpillar.
2. Cummins.
3. Kohler.

B. Source Limitations: Obtain packaged engine generators and auxiliary components from single source from single manufacturer.

2.2 PERFORMANCE REQUIREMENTS

A. Seismic Performance: Engine generator housing, subbase fuel tank, engine generator, batteries, battery racks, silencers, sound attenuating equipment, accessories, and components shall withstand the effects of earthquake motions determined according to ASCE/SEI 7 and design criteria listed on S-1 of the Contract Drawings.

1. Term "withstand" means "the unit will remain in place without separation of any parts when subjected to the seismic forces specified."
2. Shake-table testing shall comply with ICC-ES AC156. Testing shall be performed with all fluids at worst-case normal levels.
3. Component Importance Factor: 1.25.

B. B11 Compliance: Comply with B11.19.

C. NFPA Compliance:

1. Comply with NFPA 37.
2. Comply with NFPA 70.
3. Comply with NFPA 99.
4. Comply with NFPA 110 requirements for Level 2 EPSS.

D. UL Compliance: Comply with UL 2200.

E. Engine Exhaust Emissions: Comply with EPA Tier 3 requirements and applicable state and local government requirements.

F. Noise Emission: Comply with applicable state and local government requirements for maximum noise level at adjacent property boundaries due to sound emitted by engine generator, including engine, engine exhaust, engine cooling-air intake and discharge, and other components of installation.

G. Environmental Conditions: Engine generator system shall withstand the following environmental conditions without mechanical or electrical damage or degradation of performance capability:

1. Ambient Temperature: 5 to 104 deg F.
2. Relative Humidity: Zero to 95 percent.
3. Altitude: Sea level to 1,000 feet.

2.3 ENGINE GENERATOR ASSEMBLY DESCRIPTION

A. Factory-assembled and -tested, water-cooled engine, with brushless generator and accessories.

B. Electrical Components, Devices, and Accessories: Listed and labeled as defined in NFPA 70, by a qualified testing agency, and marked for intended location and application.

C. EPSS Class: Engine generator shall be classified as a Class 24 according to NFPA 110.

D. Power Factor: 0.8, lagging.

E. Frequency: 60 Hz

F. Voltage: 480 V ac.

G. Phase: Three-phase, three-wire wye.

H. Induction Method: Turbocharged.

I. Governor: Adjustable isochronous, with speed sensing.

J. Mounting Frame: Structural steel framework to maintain alignment of mounted components without depending on concrete foundation. Provide lifting attachments sized and spaced to prevent deflection of base during lifting and moving.

1. Rigging Diagram: Inscribed on metal plate permanently attached to mounting frame to indicate location and lifting capacity of each lifting attachment and engine generator center of gravity.

K. Capacities and Characteristics:

1. Power Output Ratings: Nominal ratings as indicated at 0.8 power factor excluding power required for the continued and repeated operation of the unit and auxiliaries.
2. Nameplates: For each major system component to identify manufacturer's name and address, and model and serial number of component.

L. Engine Generator Performance:

1. Steady-State Voltage Operational Bandwidth: 3 percent of rated output voltage, from no load to full load.
2. Transient Voltage Performance: Not more than 20 percent variation for 50 percent step-load increase or decrease. Voltage shall recover and remain within the steady-state operating band within three seconds.

3. Steady-State Frequency Operational Bandwidth: 0.5 percent of rated frequency, from no load to full load.
4. Steady-State Frequency Stability: When system is operating at any constant load within the rated load, there shall be no random speed variations outside the steady-state operational band and no hunting or surging of speed.
5. Transient Frequency Performance: Less than 5 percent variation for 50 percent step-load increase or decrease. Frequency shall recover and remain within the steady-state operating band within five seconds.
6. Output Waveform: At no load, harmonic content measured line to line or line to neutral shall not exceed 5 percent total and 3 percent for single harmonics. Telephone influence factor, determined according to NEMA MG 1, shall not exceed 50 percent.
7. Sustained Short-Circuit Current: For a three-phase, bolted short circuit at system output terminals, system shall supply a minimum of 250 percent of rated full-load current for not less than 10 seconds and then clear the fault automatically, without damage to generator system components.
8. Start Time: Comply with NFPA 110, Type 10 system requirements.

2.4 DIESEL ENGINE

A. Fuel: ASTM D975 diesel fuel oil, Grade 2-D S15.

B. Rated Engine Speed: 1,800 rpm.

C. Lubrication System: Engine or skid mounted.

1. Filter and Strainer: Rated to remove 90 percent of particles 5 micrometers and smaller while passing full flow.
2. Thermostatic Control Valve: Control flow in system to maintain optimum oil temperature. Unit shall be capable of full flow and is designed to be fail-safe.
3. Crankcase Drain: Arranged for complete gravity drainage to an easily removable container with no disassembly and without use of pumps, siphons, special tools, or appliances.

D. Jacket Coolant Heater: Electric-immersion type, factory installed in coolant jacket system. Comply with NFPA 110 requirements for Level 1 equipment for heater capacity and with UL 499.

E. Cooling System: Closed loop, liquid cooled, with radiator factory mounted on engine generator mounting frame and integral engine-driven coolant pump.

1. Coolant: Solution of 50 percent ethylene-glycol-based antifreeze and 50 percent water, with anticorrosion additives as recommended by engine manufacturer.
2. Size of Radiator: Adequate to contain expansion of total system coolant, from cold start to 110 percent load condition.
3. Expansion Tank: Constructed of welded steel plate and rated to withstand maximum closed-loop coolant-system pressure for engine used. Equip with gage glass and petcock.
4. Temperature Control: Self-contained, thermostatic-control valve modulates coolant flow automatically to maintain optimum constant coolant temperature as recommended by engine manufacturer.

5. Coolant Hose: Flexible assembly with inside surface of nonporous rubber and outer covering of aging-, UV-, and abrasion-resistant fabric.

    a. Rating: 50-psig maximum working pressure with coolant at 180 deg F, and noncollapsible under vacuum.
    b. End Fittings: Flanges or steel pipe nipples with clamps to suit piping and equipment connections.

F. Muffler/Silencer: Critical type, sized as recommended by engine manufacturer and selected with exhaust piping system to not exceed engine manufacturer's engine backpressure requirements.

1. Minimum sound attenuation of 25 dB at 500 Hz.
2. Sound level measured at a distance of 23 feet from exhaust discharge after installation is complete shall be 65 dBA or less.

G. Air-Intake Filter: Heavy-duty, engine-mounted air cleaner with replaceable dry-filter element and "blocked filter" indicator.

H. Starting System: 24 V electric, with negative ground.

1. Components: Sized so they are not damaged during a full engine-cranking cycle, with ambient temperature at maximum specified in "Performance Requirements" Article.
2. Cranking Motor: Heavy-duty unit that automatically engages and releases from engine flywheel without binding.
3. Cranking Cycle: As required by NFPA 110 for system level specified.
4. Battery: Lead acid, with capacity within ambient temperature range specified in "Performance Requirements" Article to provide specified cranking cycle at least three times without recharging.
5. Battery Cable: Size as recommended by engine manufacturer for cable length indicated. Include required interconnecting conductors and connection accessories.
6. Battery Compartment: Factory fabricated of metal with acid-resistant finish and thermal insulation. Thermostatically controlled heater shall be arranged to maintain battery above 50 deg F regardless of external ambient temperature within range specified in "Performance Requirements" Article. Include accessories required to support and fasten batteries in place. Provide ventilation to exhaust battery gases.
7. Battery Stand: Factory-fabricated, two-tier metal with acid-resistant finish designed to hold the quantity of battery cells required and to maintain the arrangement to minimize lengths of battery interconnections.
8. Battery-Charging Alternator: Factory mounted on engine with solid-state voltage regulation and 35-A minimum continuous rating.
9. Battery Charger: Current-limiting, automatic-equalizing, and float-charging type designed for lead-acid batteries. Unit shall comply with UL 1236 and include the following features:

    a. Operation: Equalizing-charging rate of 10 A shall be initiated automatically after battery has lost charge until an adjustable equalizing voltage is achieved at battery terminals. Unit shall then be automatically switched to a lower float-charging mode and shall continue to operate in that mode until battery is discharged again.

b. Automatic Temperature Compensation: Adjust float and equalize voltages for variations in ambient temperature from minus 40 deg F to 140 deg F to prevent overcharging at high temperatures and undercharging at low temperatures.
c. Automatic Voltage Regulation: Maintain constant output voltage regardless of input voltage variations up to plus or minus 10 percent.
d. Ammeter and Voltmeter: Flush mounted in door. Meters shall indicate charging rates.
e. Safety Functions: Sense abnormally low battery voltage and close contacts providing low battery voltage indication on control and monitoring panel. Sense high battery voltage and loss of ac input or dc output of battery charger. Either condition shall close contacts that provide a battery-charger malfunction indication at system control and monitoring panel.
f. Enclosure and Mounting: NEMA 250, Type 1 wall-mounted cabinet.

2.5 DIESEL FUEL-OIL SYSTEM

A. Comply with NFPA 30.

B. Main Fuel Pump: Mounted on engine to provide primary fuel flow under starting and load conditions.

C. Fuel Filtering: Remove water and contaminants larger than 1 micron.

D. Relief-Bypass Valve: Automatically regulates pressure in fuel line and returns excess fuel to source.

E. Subbase-Mounted, Double-Wall, Fuel-Oil, 24 hour, UL 142 Tank: Factory installed and piped, complying with UL 142 fuel-oil tank. Features include the following:

1. Tank level indicator.
2. Fuel-Tank Capacity: Minimum 133 percent of total fuel required for periodic maintenance operations between fuel refills, plus fuel for the hours of continuous operation for indicated EPSS class.
3. Leak detection in interstitial space.
4. Vandal-resistant fill cap.
5. Containment Provisions: Comply with requirements of authorities having jurisdiction.

2.6 CONTROL AND MONITORING

A. Automatic-Starting System Sequence of Operation: When mode-selector switch on the control and monitoring panel is in the automatic position, remote-control contacts in one or more separate automatic transfer switches initiate starting and stopping of engine generator. When mode-selector switch is switched to the on position, engine generator starts. The off position of same switch initiates engine generator shutdown. When engine generator is running, specified system or equipment failures or derangements automatically shut down engine generator and initiate alarms.

B. Manual-Starting System Sequence of Operation: Switching on-off switch on the generator control panel to the on position starts engine generator. The off position of same switch initiates

engine generator shutdown. When engine generator is running, specified system or equipment failures or derangements automatically shut down engine generator and initiate alarms.

C. Provide minimum run time control set for 15 minutes, with override only by operation of a remote emergency-stop switch.

D. Comply with UL 508A.

E. Configuration: Operating and safety indications, protective devices, basic system controls, and engine gages shall be grouped in a common control and monitoring panel mounted on the engine generator. Mounting method shall isolate the control panel from engine generator vibration. Panel shall be powered from the engine generator battery.

1. Wall-Mounting Cabinet Construction: Rigid, self-supporting steel unit complying with NEMA ICS 6.

F. Control and Monitoring Panel:

1. Digital controller with integrated LCD display, controls, and microprocessor, capable of local and remote control, monitoring, and programming, with battery backup.
2. Instruments: Located on the control and monitoring panel and viewable during operation.

a. Engine lubricating-oil pressure gage.
b. Engine-coolant temperature gage.
c. DC voltmeter (alternator battery charging).
d. Running-time meter.
e. AC voltmeter, for each phase.
f. AC ammeter, for each phase.
g. AC frequency meter.
h. Generator-voltage-adjusting rheostat.

3. Controls and Protective Devices: Controls, shutdown devices, and common visual alarm indication as required by NFPA 110 for Level 2 system, including the following:

a. Cranking control equipment.
b. Run-Off-Auto switch.
c. Control switch not in automatic position alarm.
d. Overcrank alarm.
e. Overcrank shutdown device.
f. Low water temperature alarm.
g. High engine temperature pre-alarm.
h. High engine temperature.
i. High engine temperature shutdown device.
j. Overspeed alarm.
k. Overspeed shutdown device.
l. Low-fuel main tank.

1) Low-fuel-level alarm shall be initiated when the level falls below that required for operation for the duration required for the indicated EPSS class.

m. Coolant low-level alarm.

n. Coolant high-temperature prealarm.
o. Coolant high-temperature alarm.
p. Coolant low-temperature alarm.
q. Coolant high-temperature shutdown device.
r. EPS load indicator.
s. Battery high-voltage alarm.
t. Low-cranking voltage alarm.
u. Battery-charger malfunction alarm.
v. Battery low-voltage alarm.
w. Lamp test.
x. Contacts for local and remote common alarm.
y. Low-starting air pressure alarm.
z. Low-starting hydraulic pressure alarm.
aa. Remote manual-stop shutdown device.
bb. Air shutdown damper alarm when used.
cc. Air shutdown damper shutdown device when used.
dd. Generator overcurrent-protective-device not-closed alarm.

G. Connection to Datalink:

1. A separate terminal block, factory wired to Form C dry contacts, for each alarm and status indication.
2. Provide connections for datalink transmission of indications to remote data terminals via Ethernet. Data system connections to terminals are covered in Section 260913 "Electrical Power Monitoring and Control."

H. Supporting Items: Include sensors, transducers, terminals, relays, and other devices and include wiring required to support specified items. Locate sensors and other supporting items on engine or generator unless otherwise indicated.

I. Remote Emergency-Stop Switch: Flush; wall mounted, unless otherwise indicated; and labeled. Push button shall be protected from accidental operation.

2.7 GENERATOR OVERCURRENT AND FAULT PROTECTION

A. Overcurrent protective devices for the entire EPSS shall be coordinated to optimize selective tripping when a short circuit occurs. Coordination of protective devices shall consider both utility and EPSS as the voltage source.

1. Overcurrent protective devices for the EPSS shall be accessible only to authorized personnel.

B. Generator Circuit Breaker: Molded-case, thermal-magnetic type; 100 percent rated; complying with UL 489.

1. Tripping Characteristic: Designed specifically for generator protection.
2. Trip Rating: Matched to generator output rating.
3. Shunt Trip: Connected to trip breaker when engine generator is shut down by other protective devices.
4. Mounting: Adjacent to or integrated with control and monitoring panel.

C. Generator Protector: Microprocessor-based unit shall continuously monitor current level in each phase of generator output, integrate generator heating effect over time, and predict when thermal damage of alternator will occur. When signaled by generator protector or other engine generator protective devices, a shunt-trip device in the generator disconnect switch shall open the switch to disconnect the generator from load circuits. Protector performs the following functions:

1. Initiates a generator overload alarm when generator has operated at an overload equivalent to 110 percent of full-rated load for 60 seconds. Indication for this alarm is integrated with other engine generator malfunction alarms. Contacts shall be available for load shed functions.
2. Under single- or three-phase fault conditions, regulates generator to 300 percent of rated full-load current for up to 10 seconds.
3. As overcurrent heating effect on the generator approaches the thermal damage point of the unit, protector switches the excitation system off, opens the generator disconnect device, and shuts down the engine generator.
4. Senses clearing of a fault by other overcurrent devices and controls recovery of rated voltage to avoid overshoot.

D. Ground-Fault Indication: Comply with NFPA 70, "Emergency System" signals for ground fault.

1. Indicate ground fault with other engine generator alarm indications.
2. Trip generator protective device on ground fault.

2.8 GENERATOR, EXCITER, AND VOLTAGE REGULATOR

A. Comply with NEMA MG 1.

B. Drive: Generator shaft shall be directly connected to engine shaft. Exciter shall be rotated integrally with generator rotor.

C. Electrical Insulation: Class H or Class F.

D. Stator-Winding Leads: Brought out to terminal box to permit future reconnection for other voltages if required. Provide six-lead alternator.

E. Range: Provide limited range of output voltage by adjusting the excitation level.

F. Construction shall prevent mechanical, electrical, and thermal damage due to vibration, overspeed up to 125 percent of rating, and heat during operation at 110 percent of rated capacity.

G. Enclosure: Dripproof.

H. Instrument Transformers: Mounted within generator enclosure.

I. Voltage Regulator: Solid-state type, separate from exciter, providing performance as specified and as required by NFPA 110.

1. Adjusting Rheostat on Control and Monitoring Panel: Provide plus or minus 5 percent adjustment of output-voltage operating band.
2. Maintain voltage within 15 percent on one step, full load.
3. Provide anti-hunt provision to stabilize voltage.
4. Maintain frequency within 5 percent and stabilize at rated frequency within five seconds.

J. Strip Heater: Thermostatically controlled unit arranged to maintain stator windings above dew point.

K. Windings: Two-thirds pitch stator winding and fully linked amortisseur winding.

L. Subtransient Reactance: 12 percent, maximum.

2.9 OUTDOOR ENGINE GENERATOR ENCLOSURE

A. Description: Vandal-resistant, sound-attenuating, weatherproof steel housing, wind resistant up to 120 mph. Multiple panels shall be lockable and provide adequate access to components requiring maintenance. Panels shall be removable by one person without tools. Instruments and control shall be mounted within enclosure.

1. Sound Attenuation Level: 65 dB at 23 feet.

B. Description: Prefabricated or pre-engineered, galvanized-steel-clad, integral structural-steel-framed, walk-in enclosure, erected on concrete foundation.

C. Structural Design and Anchorage: Comply with ASCE/SEI 7 for wind loads of up to 120 mph and design criteria listed on S-1 of the Contract Drawings.

D. Hinged Doors: With padlocking provisions.

E. Space Heater: Thermostatically controlled and sized to prevent condensation.

F. Lighting: Provide weather-resistant LED lighting with 30-fc average maintained.

G. Thermal Insulation: Manufacturer's standard materials and thickness selected in coordination with space heater to maintain winter interior temperature within operating limits required by engine generator components.

H. Muffler Location: Within enclosure.

I. Engine-Cooling Airflow through Enclosure: Maintain temperature rise of system components within required limits when unit operates at 110 percent of rated load for two hours with ambient temperature at top of range specified in system service conditions.

1. Louvers: Fixed-engine, cooling-air inlet, and discharge; stormproof and drainable type to prevent entry of rain and snow.
2. Ventilation: Provide temperature-controlled exhaust fan interlocked to prevent operation when engine is running.

J. Interior Lights with Switch: Factory-wired, vapor-proof luminaires within housing; arranged to illuminate controls and accessible interior. Arrange for external electrical connection.

1. AC lighting system and connection point for operation when remote source is available.
2. DC lighting system for operation when remote source and generator are both unavailable.

K. Convenience Outlets: Factory-wired GFCI. Arrange for external electrical connection.

L. Catwalk: Full-length catwalk with stairs and railings for access to all doors along both sides level with the bottom of the enclosure is required for maintenance. Treads to be slip-resistant. Comply with 29 CFR 1910.23.

M. Local Mini-Power Center:
1. kVA and voltage ratings shall be as shown on the Drawings.
2. Transformer windings shall be copper.
3. Local Panelboard: 120/208-volt, three-phase, four-wire, 100-amp bus power panel with main molded case switch and (12) branch circuit breakers to feed the water jacket heater, battery charger, battery warming pad receptacle, weatherproof receptacle, and two spare breakers (20A/1P). Panel enclosure shall be NEMA 1. The panel shall be located inside the enclosure mounted on generator set with vibration isolators

2.10 VIBRATION ISOLATION DEVICES

A. Elastomeric Isolator Pads: Oil- and water-resistant elastomer or natural rubber, arranged in single or multiple layers, molded with a nonslip pattern and galvanized-steel baseplates of sufficient stiffness for uniform loading over pad area, and factory cut to sizes that match requirements of supported equipment.

1. Material: Standard neoprene separated by steel shims.
2. Shore A Scale Durometer Rating: 30.
3. Number of Layers: One.
4. Minimum Deflection: 1 inch.

B. Restrained Spring Isolators: Freestanding, steel, open-spring isolators with seismic restraint.

1. Housing: Steel with resilient, vertical-limit stops to prevent spring extension due to wind loads or if weight is removed; factory-drilled baseplate bonded to 1/4-inch-thick, elastomeric isolator pad attached to baseplate underside; and adjustable equipment-mounting and -leveling bolt that acts as blocking during installation.
2. Outside Spring Diameter: Not less than 80 percent of compressed height of the spring at rated load.
3. Minimum Additional Travel: 50 percent of required deflection at rated load.
4. Lateral Stiffness: More than 80 percent of rated vertical stiffness.
5. Overload Capacity: Support 200 percent of rated load, fully compressed, without deformation or failure.
6. Minimum Deflection: 1 inch.

C. Vibration isolation devices shall not be used to accommodate misalignments or to make bends.

2.11 FINISHES

A. Indoor and Outdoor Enclosures and Components: Manufacturer's standard finish over corrosion-resistant pretreatment and compatible primer.

2.12 SOURCE QUALITY CONTROL

A. Prototype Testing: Factory test engine generator using same engine model, constructed of identical or equivalent components and equipped with identical or equivalent accessories.

1. Tests: Comply with NFPA 110, Level 1 Energy Converters and with IEEE 115.

B. Project-Specific Equipment Tests: Before shipment, factory test engine generator and other system components and accessories manufactured specifically for this Project. Perform tests at rated load and power factor. Include the following tests:

1. Test components and accessories furnished with installed unit that are not identical to those on tested prototype to demonstrate compatibility and reliability.
2. Test generator, exciter, and voltage regulator as a unit.
3. Full-load run.
4. Maximum power.
5. Voltage regulation.
6. Transient and steady-state governing.
7. Single-step load pickup.
8. Safety shutdown.
9. Provide 14 days' advance notice of tests and opportunity for observation of tests by Owner's representative.
10. Report factory test results within 10 days of completion of test.

PART 3 - EXECUTION

3.1 EXAMINATION

A. Examine areas, equipment bases, and conditions, with Installer present, for compliance with requirements for installation and other conditions affecting packaged engine generator performance.

B. Examine roughing-in for piping systems and electrical connections. Verify actual locations of connections before packaged engine generator installation.

C. Proceed with installation only after unsatisfactory conditions have been corrected.

3.2 PREPARATION

A. Interruption of Existing Electrical Service: Do not interrupt electrical service to facilities occupied by Owner or others unless permitted under the following conditions and then only after arranging to provide temporary electrical service according to requirements indicated:

1. Notify Construction Manager no fewer than two working days in advance of proposed interruption of electrical service.
2. Do not proceed with interruption of electrical service without Owner's written permission.

3.3 INSTALLATION

A. Comply with NECA 1 and NECA 404.

B. Comply with packaged engine generator manufacturers' written installation and alignment instructions and with NFPA 110.

C. Equipment Mounting:

1. Install packaged engine generators on cast-in-place concrete equipment bases. Comply with requirements for equipment bases and foundations specified in Section 033000 "Cast-in-Place Concrete."
2. Coordinate size and location of concrete bases for packaged engine generators. Cast anchor-bolt inserts into bases. Concrete, reinforcement, and formwork requirements are specified with concrete.
3. Install packaged engine generator with having a minimum deflection of 1 inch on 4-inch-high concrete base. Secure enclosure to anchor bolts installed in concrete bases. Concrete base construction is specified in Section 260548.16 "Seismic Controls for Electrical Systems."

D. Install packaged engine generator to provide access, without removing connections or accessories, for periodic maintenance.

E. Exhaust System: Install Schedule 40 black steel piping with welded joints and connect to engine muffler. Install thimble at wall. Piping shall be same diameter as muffler outlet.

1. Piping materials and installation requirements are specified in Section 232113 "Hydronic Piping."
2. Install isolating thimbles where exhaust piping penetrates combustible surfaces with a minimum of 9 inches of clearance from combustibles.

F. Drain Piping: Install condensate drain piping to muffler drain outlet with a shutoff valve, stainless-steel flexible connector, and Schedule 40 black steel pipe with welded joints.

1. Piping materials and installation requirements are specified in Section 232113 "Hydronic

G. Fuel Piping:

1. Copper and galvanized steel shall not be used in the fuel-oil piping system.

H. Electrical Wiring: Install electrical devices furnished by equipment manufacturers but not specified to be factory mounted.

3.4 CONNECTIONS

A. Piping installation requirements are specified in other Sections. Drawings indicate general arrangement of piping and specialties.

B. Connect fuel, cooling-system, and exhaust-system piping adjacent to packaged engine generator to allow space for service and maintenance.

C. Connect engine exhaust pipe to engine with flexible connector.

D. Connect fuel piping to engines with a gate valve and union and flexible connector.

E. Ground equipment according to Section 260526 "Grounding and Bonding for Electrical Systems."

F. Connect wiring according to Section 260519 "Low-Voltage Electrical Power Conductors and Cables." Provide a minimum of one 90-degree bend in flexible conduit routed to the engine generator from a stationary element.

G. Balance single-phase loads to obtain a maximum of 10 percent unbalance between any two phases.

3.5 IDENTIFICATION

A. Identify system components according to Section 260553 "Identification for Electrical Systems."

B. Install a sign indicating the generator neutral is bonded to the main service neutral at the main service location.

3.6 FIELD QUALITY CONTROL

A. Testing Agency: Contractor will engage a qualified testing agency to perform tests and inspections.

B. Manufacturer's Field Service: Engage a factory-authorized service representative to test and inspect components, assemblies, and equipment installations, including connections.

C. Perform tests and inspections with the assistance of a factory-authorized service representative.

D. Tests and Inspections:

1. Perform tests recommended by manufacturer and in "Visual and Mechanical Inspection" and "Electrical and Mechanical Tests" subparagraphs below, as specified in the NETA ATS. Certify compliance with test parameters.

a. Visual and Mechanical Inspection:

1) Compare equipment nameplate data with Drawings and the Specifications.
2) Inspect physical and mechanical condition.

3) Inspect anchorage, alignment, and grounding.
4) Verify that the unit is clean.

b. Electrical and Mechanical Tests:

1) Perform insulation-resistance tests according to IEEE 43.

a) Machines Larger Than 200 hp: Test duration shall be 10 minutes. Calculate polarization index.
b) Machines 200 hp or Less: Test duration shall be one minute. Calculate the dielectric-absorption ratio.

2) Test protective relay devices.
3) Verify phase rotation, phasing, and synchronized operation as required by the application.
4) Functionally test engine shutdown for low oil pressure, overtemperature, overspeed, and other protection features as applicable.
5) Perform vibration test for each main bearing cap.
6) Conduct performance test according to NFPA 110.
7) Verify correct functioning of the governor and regulator.

2. NFPA 110 Acceptance Tests: Perform tests required by NFPA 110 that are additional to those specified here, including, but not limited to, single-step full-load pickup test.
3. Battery Tests: Equalize charging of battery cells according to manufacturer's written instructions. Record individual cell voltages.

a. Measure charging voltage and voltages between available battery terminals for full-charging and float-charging conditions. Check electrolyte level and specific gravity under both conditions.
b. Test for contact integrity of all connectors. Perform an integrity load test and a capacity load test for the battery.
c. Verify acceptance of charge for each element of the battery after discharge.
d. Verify that measurements are within manufacturer's specifications.

4. Battery-Charger Tests: Verify specified rates of charge for both equalizing and float-charging conditions.
5. System Integrity Tests: Methodically verify proper installation, connection, and integrity of each element of engine generator system before and during system operation. Check for air, exhaust, and fluid leaks.
6. Exhaust-System Back-Pressure Test: Use a manometer with a scale exceeding 40-inch wg. Connect to exhaust line close to engine exhaust manifold. Verify that back pressure at full-rated load is within manufacturer's written allowable limits for the engine.
7. Exhaust Emissions Test: Comply with applicable government test criteria.
8. Voltage and Frequency Transient Stability Tests: Use recording oscilloscope to measure voltage and frequency transients for 50 and 100 percent step-load increases and decreases, and verify that performance is as specified.
9. Harmonic-Content Tests: Measure harmonic content of output voltage at 25 percent and 100 percent of rated linear load. Verify that harmonic content is within specified limits.
10. Noise-Level Tests: Measure A-weighted level of noise emanating from engine generator installation, including engine exhaust and cooling-air intake and discharge, at four

locations 25 feet from edge of the generator enclosure, and compare measured levels with required values.

E. Coordinate tests with tests for transfer switches, and run them concurrently.

F. Test instruments shall have been calibrated within the past 12 months, traceable to NIST Calibration Services, and adequate for making positive observation of test results. Make calibration records available for examination on request.

G. Leak Test: After installation, charge exhaust, coolant, and fuel systems and test for leaks. Repair leaks and retest until no leaks exist.

H. Operational Test: After electrical circuitry has been energized, start units to confirm proper motor rotation and unit operation for generator and associated equipment.

I. Test and adjust controls and safeties. Replace damaged and malfunctioning controls and equipment.

J. Remove and replace malfunctioning units and retest as specified above.

K. Retest: Correct deficiencies identified by tests and observations, and retest until specified requirements are met.

L. Report results of tests and inspections in writing. Record adjustable relay settings and measured insulation resistances, time delays, and other values and observations. Attach a label or tag to each tested component, indicating satisfactory completion of tests.

M. Infrared Scanning: After Substantial Completion, but not more than 60 days after final acceptance, perform an infrared scan of each power wiring termination and each bus connection while running with maximum load. Remove all access panels, so terminations and connections are accessible to portable scanner.

1. Follow-up Infrared Scanning: Perform an additional follow-up infrared scan 11 months after date of Substantial Completion.
2. Instrument: Use an infrared scanning device designed to measure temperature or to detect significant deviations from normal values. Provide calibration record for device.
3. Record of Infrared Scanning: Prepare a certified report that identifies terminations and connections checked and that describes scanning results. Include notation of deficiencies detected, remedial action taken, and observations after remedial action.

3.7 MAINTENANCE SERVICE

A. Initial Maintenance Service: Beginning at Substantial Completion, maintenance service shall include 12 months' full maintenance by skilled employees of manufacturer's authorized service representative. Include quarterly preventive maintenance and exercising to check for proper starting, load transfer, and running under load. Include routine preventive maintenance as recommended by manufacturer and adjusting as required for proper operation. Parts shall be manufacturer's authorized replacement parts and supplies.

3.8 DEMONSTRATION

A. Engage a factory-authorized service representative to train Owner's maintenance personnel to adjust, operate, and maintain packaged engine generators.

END OF SECTION 263213.13

© 2023 CDM Smith
All Rights Reserved

This page intentionally left blank.

© 2023 CDM Smith
All Rights Reserved

SECTION 263600 - TRANSFER SWITCHES

PART 1 - GENERAL

1.1 RELATED DOCUMENTS

A. Drawings and general provisions of the Contract, including General and Supplementary Conditions and Division 01 Specification Sections, apply to this Section.

1.2 SUMMARY

A. Section includes automatic transfer switches rated 600 V and less.

1.3 ACTION SUBMITTALS

A. Product Data: For each type of product.

1. Include construction details, material descriptions, dimensions of individual components and profiles, and finishes for transfer switches.
2. Include rated capacities, operating characteristics, electrical characteristics, and accessories.

B. Shop Drawings:

1. Include plans, elevations, sections, details showing minimum clearances, conductor entry provisions, gutter space, and installed features and devices.
2. Include material lists for each switch specified.
3. Single-Line Diagram: Show connections between transfer switch, power sources, and load; and show interlocking provisions for each combined transfer switch and bypass/isolation switch.
4. Riser Diagram: Show interconnection wiring between transfer switches, bypass/isolation switches, annunciators, and control panels.

1.4 INFORMATIONAL SUBMITTALS

A. Qualification Data: For manufacturer-authorized service representative.

B. Seismic Qualification Data: Certificates, for transfer switches, accessories, and components, from manufacturer.

1. Basis for Certification: Indicate whether withstand certification is based on actual test of assembled components or on calculation.
2. Dimensioned Outline Drawings of Equipment Unit: Identify center of gravity and locate and describe mounting and anchorage provisions.
3. Detailed description of equipment anchorage devices on which the certification is based and their installation requirements.

C. Field quality-control reports.

1.5 CLOSEOUT SUBMITTALS

A. Operation and Maintenance Data: For each type of product to include in emergency, operation, and maintenance manuals.

1. In addition to items specified in Section 017823 "Operation and Maintenance Data," include the following:

a. Features and operating sequences, both automatic and manual.
b. List of all factory settings of relays; provide relay-setting and calibration instructions, including software, where applicable.

1.6 QUALITY ASSURANCE

A. Testing Agency Qualifications:

1. Member company of NETA.

a. Testing Agency's Field Supervisor: Certified by NETA to supervise on-site testing.

1.7 WARRANTY

A. Manufacturer's Warranty: Manufacturer agrees to repair or replace components of transfer switch or transfer switch components that fail in materials or workmanship within specified warranty period.

1. Warranty Period: 12 months from date of Substantial Completion.

PART 2 - PRODUCTS

2.1 PERFORMANCE REQUIREMENTS

A. Electrical Components, Devices, and Accessories: Listed and labeled as defined in NFPA 70, by a qualified testing agency, and marked for intended location and application.

B. Comply with NEMA ICS 1.

C. Comply with NFPA 110.

D. Comply with UL 1008 unless requirements of these Specifications are stricter.

E. Indicated Current Ratings: Apply as defined in UL 1008 for continuous loading and total system transfer, including tungsten filament lamp loads not exceeding 30 percent of switch ampere rating, unless otherwise indicated.

F. Tested Fault-Current Closing and Short-Circuit Ratings: Adequate for duty imposed by protective devices at installation locations in Project under the fault conditions indicated, based on testing according to UL 1008.

1. Where transfer switch includes internal fault-current protection, rating of switch and trip unit combination shall exceed indicated fault-current value at installation location.
2. Short-time withstand capability for 0.3 seconds.

G. Repetitive Accuracy of Solid-State Controls: All settings shall be plus or minus 2 percent or better over an operating temperature range of minus 20 to plus 70 deg C.

H. Resistance to Damage by Voltage Transients: Components shall meet or exceed voltage-surge withstand capability requirements when tested according to IEEE C62.62. Components shall meet or exceed voltage-impulse withstand test of NEMA ICS 1.

I. Electrical Operation: Accomplish by a nonfused, momentarily energized solenoid or electric-motor-operated mechanism. Switches for emergency or standby purposes shall be mechanically and electrically interlocked in both directions to prevent simultaneous connection to both power sources unless closed transition.

J. Service-Rated Transfer Switch:

1. Comply with UL 869A and UL 489.
2. Provide terminals for bonding the grounding electrode conductor to the grounded service conductor.
3. In systems with a neutral, the bonding connection shall be on the neutral bus.
4. Provide removable link for temporary separation of the service and load grounded conductors.
5. Surge Protective Device: Service rated.
6. Ground-Fault Protection: Comply with UL 1008 for normal bus.
7. Service Disconnecting Means: Externally operated, manual mechanically actuated.

K. Neutral Switching: Where four-pole switches are indicated, provide neutral pole switched simultaneously with phase poles.

L. Neutral Terminal: Solid and fully rated unless otherwise indicated.

M. Oversize Neutral: Ampacity and switch rating of neutral path through units indicated for oversize neutral shall be double the nominal rating of circuit in which switch is installed.

N. Heater: Equip switches exposed to outdoor temperatures and humidity, and other units indicated, with an internal heater. Provide thermostat within enclosure to control heater.

O. Annunciation, Control, and Programming Interface Components: Devices at transfer switches for communicating with remote programming devices, annunciators, or annunciator and control panels shall have communication capability matched with remote device.

P. Factory Wiring: Train and bundle factory wiring and label, consistent with Shop Drawings, by color-code or by numbered or lettered wire and cable with printed markers at terminations. Color-coding and wire and cable markers are specified in Section 260553 "Identification for Electrical Systems."

1. Designated Terminals: Pressure type, suitable for types and sizes of field wiring indicated.
2. Power-Terminal Arrangement and Field-Wiring Space: Suitable for top, side, or bottom entrance of feeder conductors as indicated.
3. Control Wiring: Equipped with lugs suitable for connection to terminal strips.
4. Accessible via front access.

Q. Enclosures: General-purpose NEMA 250, Type 3R, complying with NEMA ICS 6 and UL 508, unless otherwise indicated.

2.2 CONTACTOR-TYPE AUTOMATIC TRANSFER SWITCHES

A. Manufacturers: Subject to compliance with requirements, available manufacturers offering products that may be incorporated into the Work include, but are not limited to the following:

1. Eaton.
2. ABB, Electrification Business.
3. Siemens Industry, Inc., Energy Management Division.
4. Square D; Schneider Electric USA.

B. Comply with Level 1 equipment according to NFPA 110.

C. Switch Characteristics: Designed for continuous-duty repetitive transfer of full-rated current between active power sources.

1. Limitation: Switches using molded-case switches or circuit breakers or insulated-case circuit-breaker components are unacceptable.
2. Switch Action: Double throw; mechanically held in both directions.
3. Contacts: Silver composition or silver alloy for load-current switching. Contactor-style automatic transfer-switch units, rated 600 A and higher, shall have separate arcing contacts.
4. Conductor Connectors: Suitable for use with conductor material and sizes.
5. Material: Hard-drawn copper, 98 percent conductivity.
6. Main and Neutral Lugs: Mechanical type.
7. Ground Lugs and Bus-Configured Terminators: Mechanical type.
8. Ground bar.
9. Connectors shall be marked for conductor size and type according to UL 1008.

D. Automatic Open-Transition Transfer Switches: Interlocked to prevent the load from being closed on both sources at the same time.

1. Sources shall be mechanically and electrically interlocked to prevent closing both sources on the load at the same time.

E. Manual Switch Operation: Unloaded. Control circuit automatically disconnects from electrical operator during manual operation.

F. Electric Switch Operation: Electrically actuated by push buttons designated "Normal Source" and "Alternative Source." Switch shall be capable of transferring load in either direction with either or both sources energized.

G. Signal-Before-Transfer Contacts: A set of normally open/normally closed dry contacts operates in advance of retransfer to normal source. Interval shall be adjustable from 1 to 30 seconds.

H. Digital Communication Interface: Matched to capability of remote annunciator or annunciator and control panel.

I. Automatic Transfer-Switch Controller Features:

1. Controller operates through a period of loss of control power.
2. Undervoltage Sensing for Each Phase of Normal and Alternate Source: Sense low phase-to-ground voltage on each phase. Pickup voltage shall be adjustable from 85 to 100 percent of nominal, and dropout voltage shall be adjustable from 75 to 98 percent of pickup value. Factory set for pickup at 90 percent and dropout at 85 percent.
3. Voltage/Frequency Lockout Relay: Prevent premature transfer to generator. Pickup voltage shall be adjustable from 85 to 100 percent of nominal. Factory set for pickup at 90 percent. Pickup frequency shall be adjustable from 90 to 100 percent of nominal. Factory set for pickup at 95 percent.
4. Time Delay for Retransfer to Normal Source: Adjustable from zero to 30 minutes, and factory set for 10 minutes. Override shall automatically defeat delay on loss of voltage or sustained undervoltage of emergency source, provided normal supply has been restored.
5. Test Switch: Simulate normal-source failure.
6. Switch-Position Pilot Lights: Indicate source to which load is connected.
7. Source-Available Indicating Lights: Supervise sources via transfer-switch normal- and emergency-source sensing circuits.

    a. Normal Power Supervision: Green light with nameplate engraved "Normal Source Available."
    b. Emergency Power Supervision: Red light with nameplate engraved "Emergency Source Available."

8. Unassigned Auxiliary Contacts: Two normally open, single-pole, double-throw contacts for each switch position, rated 10 A at 240-V ac.
9. Transfer Override Switch: Overrides automatic retransfer control so transfer switch will remain connected to emergency power source regardless of condition of normal source. Pilot light indicates override status.
10. Engine Starting Contacts: One isolated and normally closed, and one isolated and normally open; rated 10 A at 32-V dc minimum.
11. Engine Shutdown Contacts: Time delay adjustable from zero to five minutes, and factory set for five minutes. Contacts shall initiate shutdown at remote engine-generator controls after retransfer of load to normal source.
12. Engine-Generator Exerciser: Solid-state, programmable-time switch starts engine generator and transfers load to it from normal source for a preset time, then retransfers and shuts down engine after a preset cool-down period. Initiates exercise cycle at preset intervals adjustable from 7 to 30 days. Running periods shall be adjustable from 10 to 30 minutes. Factory settings shall be for 7-day exercise cycle, 20-minute running period, and 5-minute cool-down period. Exerciser features include the following:

    a. Exerciser Transfer Selector Switch: Permits selection of exercise with and without load transfer.
    b. Push-button programming control with digital display of settings.

c. Integral battery operation of time switch when normal control power is unavailable.

2.3 SOURCE QUALITY CONTROL

A. Factory Tests: Test and inspect components, assembled switches, and associated equipment according to UL 1008. Ensure proper operation. Check transfer time and voltage, frequency, and time-delay settings for compliance with specified requirements. Perform dielectric strength test complying with NEMA ICS 1.

B. Prepare test and inspection reports.

1. For each of the tests required by UL 1008, performed on representative devices, for legally required systems. Include results of test for the following conditions:

a. Overvoltage.
b. Undervoltage.
c. Loss of supply voltage.
d. Reduction of supply voltage.
e. Alternative supply voltage or frequency is at minimum acceptable values.
f. Temperature rise.
g. Dielectric voltage-withstand; before and after short-circuit test.
h. Overload.
i. Contact opening.
j. Endurance.
k. Short circuit.
l. Short-time current capability.
m. Receptacle withstand capability.
n. Insulating base and supports damage.

PART 3 - EXECUTION

3.1 INSTALLATION

A. Floor-Mounting Switch: Anchor to floor by bolting.

1. Install transfer switches on cast-in-place concrete equipment base(s). Comply with requirements for equipment bases and foundations specified in Section 033000 "Cast-in-Place Concrete."
2. Comply with requirements for seismic control devices specified in Section 260548.16 "Seismic Controls for Electrical Systems."
3. Coordinate size and location of concrete bases. Cast anchor-bolt inserts into bases.
4. Provide workspace and clearances required by NFPA 70.

B. Annunciator and Control Panel Mounting: Flush in wall unless otherwise indicated.

C. Identify components according to Section 260553 "Identification for Electrical Systems."

D. Set field-adjustable intervals and delays, relays, and engine exerciser clock.

E. Comply with NECA 1.

3.2 CONNECTIONS

A. Wiring to Remote Components: Match type and number of cables and conductors to generator sets, motor controls, and communication requirements of transfer switches as recommended by manufacturer. Increase raceway sizes at no additional cost to Owner if necessary to accommodate required wiring.

B. Wiring Method: Install cables in raceways and cable trays except within electrical enclosures. Conceal raceway and cables except in unfinished spaces.

1. Comply with requirements for raceways and boxes specified in Section 260533 "Raceways and Boxes for Electrical Systems."

C. Wiring within Enclosures: Bundle, lace, and train conductors to terminal points with no excess and without exceeding manufacturer's limitations on bending radii.

D. Ground equipment according to Section 260526 "Grounding and Bonding for Electrical Systems."

E. Connect wiring according to Section 260519 "Low-Voltage Electrical Power Conductors and Cables."

F. Connect twisted pair cable according to Section 260523 "Control-Voltage Electrical Power Cables."

G. Route and brace conductors according to manufacturer's written instructions and Section 260529 "Hangers and Supports for Electrical Systems." Do not obscure manufacturer's markings and labels.

H. Brace and support equipment according to Section 260548.16 "Seismic Controls for Electrical Systems."

I. Final connections to equipment shall be made with liquidtight, flexible metallic conduit no more than 18 inches in length.

3.3 FIELD QUALITY CONTROL

A. Testing Agency: Engage a qualified testing agency to perform tests and inspections.

B. Manufacturer's Field Service: Engage a factory-authorized service representative to test and inspect components, assemblies, and equipment installations, including connections.

C. Perform the following tests and inspections with the assistance of a factory-authorized service representative:

1. After installing equipment, test for compliance with requirements according to NETA ATS.
2. Visual and Mechanical Inspection:

    a. Compare equipment nameplate data with Drawings and Specifications.
    b. Inspect physical and mechanical condition.
    c. Inspect anchorage, alignment, grounding, and required clearances.
    d. Verify that the unit is clean.
    e. Verify appropriate lubrication on moving current-carrying parts and on moving and sliding surfaces.
    f. Verify that manual transfer warnings are attached and visible.
    g. Verify tightness of all control connections.
    h. Inspect bolted electrical connections for high resistance using one of the following methods, or both:

        1) Use of low-resistance ohmmeter.
        2) Verify tightness of accessible bolted electrical connections by calibrated torque-wrench method according to manufacturer's published data.

    i. Perform manual transfer operation.
    j. Verify positive mechanical interlocking between normal and alternate sources.
    k. Perform visual and mechanical inspection of surge arresters.
    l. Inspect control power transformers.

        1) Inspect for physical damage, cracked insulation, broken leads, tightness of connections, defective wiring, and overall general condition.
        2) Verify that primary and secondary fuse or circuit-breaker ratings match Drawings.
        3) Verify correct functioning of drawout disconnecting contacts, grounding contacts, and interlocks.

3. Electrical Tests:

    a. Perform insulation-resistance tests on all control wiring with respect to ground.
    b. Perform a contact/pole-resistance test. Compare measured values with manufacturer's acceptable values.
    c. Verify settings and operation of control devices.
    d. Calibrate and set all relays and timers.
    e. Verify phase rotation, phasing, and synchronized operation.
    f. Perform automatic transfer tests.
    g. Verify correct operation and timing of the following functions:

        1) Normal source voltage-sensing and frequency-sensing relays.
        2) Engine start sequence.
        3) Time delay on transfer.
        4) Alternative source voltage-sensing and frequency-sensing relays.
        5) Automatic transfer operation.
        6) Interlocks and limit switch function.
        7) Time delay and retransfer on normal power restoration.
        8) Engine cool-down and shutdown feature.

4. Measure insulation resistance phase-to-phase and phase-to-ground with insulation-resistance tester. Include external annunciation and control circuits. Use test voltages and procedure recommended by manufacturer. Comply with manufacturer's specified minimum resistance.

    a. Check for electrical continuity of circuits and for short circuits.
    b. Inspect for physical damage, proper installation and connection, and integrity of barriers, covers, and safety features.
    c. Verify that manual transfer warnings are properly placed.
    d. Perform manual transfer operation.

5. After energizing circuits, perform each electrical test for transfer switches stated in NETA ATS and demonstrate interlocking sequence and operational function for each switch at least three times.

    a. Simulate power failures of normal source to automatic transfer switches and retransfer from emergency source with normal source available.
    b. Simulate loss of phase-to-ground voltage for each phase of normal source.
    c. Verify time-delay settings.
    d. Verify pickup and dropout voltages by data readout or inspection of control settings.
    e. Test bypass/isolation unit functional modes and related automatic transfer-switch operations.
    f. Perform contact-resistance test across main contacts and correct values exceeding 500 microhms and values for one pole deviating by more than 50 percent from other poles.
    g. Verify proper sequence and correct timing of automatic engine starting, transfer time delay, retransfer time delay on restoration of normal power, and engine cool-down and shutdown.

6. Ground-Fault Tests: Coordinate with testing of ground-fault protective devices for power delivery from both sources.

    a. Verify grounding connections and locations and ratings of sensors.

D. Coordinate tests with tests of generator and run them concurrently.

E. Report results of tests and inspections in writing. Record adjustable relay settings and measured insulation and contact resistances and time delays. Attach a label or tag to each tested component indicating satisfactory completion of tests.

F. Transfer switches will be considered defective if they do not pass tests and inspections.

G. Remove and replace malfunctioning units and retest as specified above.

H. Prepare test and inspection reports.

I. Infrared Scanning: After Substantial Completion, but not more than 60 days after Final Acceptance, perform an infrared scan of each switch. Remove all access panels so joints and connections are accessible to portable scanner.

1. Instrument: Use an infrared scanning device designed to measure temperature or to detect significant deviations from normal values. Provide calibration record for device.
2. Record of Infrared Scanning: Prepare a certified report that identifies switches checked and that describes scanning results. Include notation of deficiencies detected, remedial action taken, and observations after remedial action.
3. Follow-up Infrared Scanning: Perform an additional follow-up infrared scan of each switch 11 months after date of Substantial Completion.

3.4 DEMONSTRATION

A. Engage a factory-authorized service representative to train Owner's maintenance personnel to adjust, operate, and maintain transfer switches and related equipment.

B. Training shall include testing ground-fault protective devices and instructions to determine when the ground-fault system shall be retested. Include instructions on where ground-fault sensors are located and how to avoid negating the ground-fault protection scheme during testing and circuit modifications.

C. Coordinate this training with that for generator equipment.

END OF SECTION 263600

© 2023 CDM Smith
All Rights Reserved

SECTION 265619 – LED EXTERIOR LIGHTING

PART 1 - GENERAL

1.1 RELATED DOCUMENTS

A. Drawings and general provisions of the Contract, including General and Supplementary Conditions and Division 01 Specification Sections, apply to this Section.

1.2 SUMMARY

A. Section Includes:

1. Exterior solid-state luminaires that are designed for and exclusively use LED lamp technology.
2. Luminaire supports.
3. Luminaire-mounted photoelectric relays.

1.3 DEFINITIONS

A. CCT: Correlated color temperature.

B. CRI: Color rendering index.

C. Fixture: See "Luminaire."

D. IP: International Protection or Ingress Protection Rating.

E. Lumen: Measured output of lamp and luminaire, or both.

F. Luminaire: Complete lighting unit, including lamp, reflector, and housing.

1.4 ACTION SUBMITTALS

A. Product Data: For each type of luminaire.

1. Arrange in order of luminaire designation.
2. Include data on features, accessories, and finishes.
3. Include physical description and dimensions of luminaire.
4. Lamps, include life, output (lumens, CCT, and CRI), and energy-efficiency data.
5. Photometric data and adjustment factors based on laboratory tests, complying with IES Lighting Measurements Testing and Calculation Guides, of each luminaire type. The adjustment factors shall be for lamps and accessories identical to those indicated for the luminaire as applied in this Project.

a. Manufacturer's Certified Data: Photometric data certified by manufacturer's laboratory with a current accreditation under the NVLAP for Energy Efficient Lighting Products.
b. Testing Agency Certified Data: For indicated luminaires, photometric data certified by a qualified independent testing agency. Photometric data for remaining luminaires shall be certified by manufacturer.

6. Wiring diagrams for power, control, and signal wiring.
7. Photoelectric relays.
8. Means of attaching luminaires to supports and indication that the attachment is suitable for components involved.

B. Shop Drawings: For nonstandard or custom luminaires.

1. Include plans, elevations, sections, and mounting and attachment details.
2. Include details of luminaire assemblies. Indicate dimensions, weights, loads, required clearances, method of field assembly, components, and location and size of each field connection.
3. Include diagrams for power, signal, and control wiring.

C. Product Schedule: For luminaires and lamps. Use same designations indicated on Drawings.

1.5 INFORMATIONAL SUBMITTALS

A. Qualification Data: For testing laboratory providing photometric data for luminaires.

B. Seismic Qualification Data: For luminaires, accessories, and components, from manufacturer.

1. Basis for Certification: Indicate whether withstand certification is based on actual test of assembled components or on calculation.
2. Dimensioned Outline Drawings of Equipment Unit: Identify center of gravity and locate and describe mounting and anchorage provisions.
3. Detailed description of equipment anchorage devices on which the certification is based and their installation requirements.

C. Product Certificates: For each type of the following:

1. Luminaire.
2. Photoelectric relay.

D. Product Test Reports: For each luminaire, for tests performed by a qualified testing agency.

E. Source quality-control reports.

F. Sample warranty.

1.6 CLOSEOUT SUBMITTALS

A. Operation and Maintenance Data: For luminaires and photoelectric relays to include in operation and maintenance manuals.

1. Provide a list of all lamp types used on Project. Use ANSI and manufacturers' codes.
2. Provide a list of all photoelectric relay types used on Project; use manufacturers' codes.

1.7 MAINTENANCE MATERIAL SUBMITTALS

A. Furnish extra materials that match products installed and that are packaged with protective covering for storage and identified with labels describing contents.

1. Lamps: Ten for every 100 of each type and rating installed. Furnish at least one of each type.
2. Glass, Acrylic, and Plastic Lenses, Covers, and Other Optical Parts: One for every 100 of each type and rating installed. Furnish at least one of each type.
3. Diffusers and Lenses: One for every 100 of each type and rating installed. Furnish at least one of each type.
4. Globes and Guards: One for every 20 of each type and rating installed. Furnish at least one of each type.

1.8 QUALITY ASSURANCE

A. Luminaire Photometric Data Testing Laboratory Qualifications: Luminaire manufacturers' laboratory that is accredited under the NVLAP for Energy Efficient Lighting Products.

B. Luminaire Photometric Data Testing Laboratory Qualifications: Provided by an independent agency, with the experience and capability to conduct the testing indicated, that is an NRTL as defined by OSHA in 29 CFR 1910.7, accredited under the NVLAP for Energy Efficient Lighting Products and complying with applicable IES testing standards.

C. Provide luminaires from a single manufacturer for each luminaire type.

D. Each luminaire type shall be binned within a three-step MacAdam Ellipse to ensure color consistency among luminaires.

E. Installer Qualifications: An authorized representative who is trained and approved by manufacturer.

1.9 DELIVERY, STORAGE, AND HANDLING

A. Protect finishes of exposed surfaces by applying a strippable, temporary protective covering prior to shipping.

1.10 FIELD CONDITIONS

A. Verify existing and proposed utility structures prior to the start of work associated with luminaire installation.

B. Mark locations of exterior luminaires for approval by Engineer prior to the start of luminaire installation.

1.11 WARRANTY

A. Warranty: Manufacturer and Installer agree to repair or replace components of luminaires that fail in materials or workmanship within specified warranty period.

1. Failures include, but are not limited to, the following:

a. Structural failures, including luminaire support components.
b. Faulty operation of luminaires and accessories.
c. Deterioration of metals, metal finishes, and other materials beyond normal weathering.

2. Warranty Period: Two years from date of Substantial Completion.

PART 2 - PRODUCTS

2.1 PERFORMANCE REQUIREMENTS

A. Seismic Performance: Luminaires shall withstand the effects of earthquake motions determined according to ASCE/SEI 7.

B. Seismic Performance: Luminaires and lamps shall be labeled vibration and shock resistant.

1. Term "withstand" means "the luminaire will remain in place without separation of any parts when subjected to the seismic forces specified and the luminaire will be fully operational during and after the seismic event."

2.2 LUMINAIRE REQUIREMENTS

A. Electrical Components, Devices, and Accessories: Listed and labeled as defined in NFPA 70, by a qualified testing agency, and marked for intended location and application.

B. NRTL Compliance: Luminaires shall be listed and labeled for indicated class and division of hazard by an NRTL.

C. FM Global Compliance: Luminaires for hazardous locations shall be listed and labeled for indicated class and division of hazard by FM Global.

D. UL Compliance: Comply with UL 1598 and listed for wet location.

E. Lamp base complying with ANSI C81.61.

F. Bulb shape complying with ANSI C79.1.

G. L70 lamp life of 50,000 hours.

H. Lamps dimmable from 100 percent to 0 percent of maximum light output.

I. Internal driver.

J. Nominal Operating Voltage: As Indicated on Drawings.

K. Lamp Rating: Lamp marked for outdoor use.

L. Source Limitations: Obtain luminaires from single source from a single manufacturer.

M. Refer to Light Fixture Schedule on the Contract Drawing for fixture detail.

2.3 LUMINAIRE-MOUNTED PHOTOELECTRIC RELAYS

A. Comply with UL 773 or UL 773A.

B. Contact Relays: Factory mounted, single throw, designed to fail in the on position, and factory set to turn light unit on at 1.5 to 3 fc and off at 4.5 to 10 fc with 15-second minimum time delay. Relay shall have directional lens in front of photocell to prevent artificial light sources from causing false turnoff.

1. Relay with locking-type receptacle shall comply with ANSI C136.10.
2. Adjustable window slide for adjusting on-off set points.

2.4 MATERIALS

A. Metal Parts: Free of burrs and sharp corners and edges.

B. Sheet Metal Components: Corrosion-resistant aluminum. Form and support to prevent warping and sagging.

C. Doors, Frames, and Other Internal Access: Smooth operating, free of light leakage under operating conditions, and designed to permit relamping without use of tools. Designed to prevent doors, frames, lenses, diffusers, and other components from falling accidentally during relamping and when secured in operating position. Doors shall be removable for cleaning or replacing lenses.

D. Lens and Refractor Gaskets: Use heat- and aging-resistant resilient gaskets to seal and cushion lenses and refractors in luminaire doors.

E. Reflecting surfaces shall have minimum reflectance as follows unless otherwise indicated:

1. White Surfaces: 85 percent.
2. Specular Surfaces: 83 percent.
3. Diffusing Specular Surfaces: 75 percent.

F. Housings:

1. Rigidly formed, weather- and light-tight enclosure that will not warp, sag, or deform in use.
2. Provide filter/breather for enclosed luminaires.

G. Factory-Applied Labels: Comply with UL 1598. Include recommended lamps. Labels shall be located where they will be readily visible to service personnel, but not seen from normal viewing angles when lamps are in place.

1. Label shall include the following lamp characteristics:

a. "USE ONLY" and include specific lamp type.
b. Lamp diameter, shape, size, wattage, and coating.
c. CCT and CRI for all luminaires.

2.5 LUMINAIRE SUPPORT COMPONENTS

A. Comply with requirements in Section 260529 "Hangers and Supports for Electrical Systems" for channel and angle iron supports and nonmetallic channel and angle supports.

PART 3 - EXECUTION

3.1 EXAMINATION

A. Examine substrates, areas, and conditions, with Installer present, for compliance with requirements for installation tolerances and other conditions affecting performance of the Work.

B. Examine roughing-in for luminaire electrical conduit to verify actual locations of conduit connections before luminaire installation.

C. Examine walls, roofs, for suitable conditions where luminaires will be installed.

D. Proceed with installation only after unsatisfactory conditions have been corrected.

3.2 TEMPORARY LIGHTING

A. If approved by the Engineer, use selected permanent luminaires for temporary lighting. When construction is substantially complete, clean luminaires used for temporary lighting and install new lamps.

3.3 GENERAL INSTALLATION REQUIREMENTS

A. Comply with NECA 1.

B. Use fastening methods and materials selected to resist seismic forces defined for the application and approved by manufacturer.

C. Install lamps in each luminaire.

D. Fasten luminaire to structural support.

E. Supports:

1. Sized and rated for luminaire weight.
2. Able to maintain luminaire position after cleaning and relamping.
3. Support luminaires without causing deflection of finished surface.
4. Luminaire-mounting devices shall be capable of supporting a horizontal force of 100 percent of luminaire weight and a vertical force of 400 percent of luminaire weight.

F. Wall-Mounted Luminaire Support:

1. Attached to structural members in walls.

G. Wiring Method: Install cables in raceways. Conceal raceways and cables.

H. Install luminaires level, plumb, and square with finished grade unless otherwise indicated.

I. Coordinate layout and installation of luminaires with other construction.

J. Adjust luminaires that require field adjustment or aiming. Include adjustment of photoelectric device to prevent false operation of relay by artificial light sources, favoring a north orientation.

K. Comply with requirements in Section 260519 "Low-Voltage Electrical Power Conductors and Cables" and Section 260533 "Raceways and Boxes for Electrical Systems" for wiring connections and wiring methods.

3.4 CORROSION PREVENTION

A. Aluminum: Do not use in contact with earth or concrete. When in direct contact with a dissimilar metal, protect aluminum by insulating fittings or treatment.

B. Steel Conduits: Comply with Section 260533 "Raceways and Boxes for Electrical Systems." In concrete foundations, wrap conduit with 0.010-inch-thick, pipe-wrapping plastic tape applied with a 50 percent overlap.

3.5 IDENTIFICATION

A. Identify system components, wiring, cabling, and terminals. Comply with requirements for identification specified in Section 260553 "Identification for Electrical Systems."

3.6 FIELD QUALITY CONTROL

A. Inspect each installed luminaire for damage. Replace damaged luminaires and components.

B. Perform the following tests and inspections:

1. Operational Test: After installing luminaires, switches, and accessories, and after electrical circuitry has been energized, test units to confirm proper operation.
2. Verify operation of photoelectric controls.

C. Illumination Tests:

1. Measure light intensities at night. Use photometers with calibration referenced to NIST standards. Comply with the following IES testing guides:

    a. IES LM-5.
    b. IES LM-50.
    c. IES LM-52.
    d. IES LM-64.
    e. IES LM-72.

2. Operational Test: After installing luminaires, switches, and accessories, and after electrical circuitry has been energized, test units to confirm proper operation.

D. Luminaire will be considered defective if it does not pass tests and inspections.

E. Prepare a written report of tests, inspections, observations, and verifications indicating and interpreting results. If adjustments are made to lighting system, retest to demonstrate compliance with standards.

3.7 DEMONSTRATION

A. Train Owner's maintenance personnel to adjust, operate, and maintain luminaires and photocell relays.

END OF SECTION 265619

© 2023 CDM Smith
All Rights Reserved

SECTION 266100 - ELECTRICAL POWER HOUSE

PART 1 - GENERAL

1.1 RELATED DOCUMENTS

A. Drawings and general provisions of the Contract, including General and Supplementary Conditions and Division 01 Specification Sections, apply to this Section.

1.2 SUMMARY

A. Section Includes:

1. Pre-fabricated electrical walk-in enclosure, referred to as the enclosure or Power House within this specification.
2. Enclosure shall be environmentally controlled and shall consist of a coordinated grouping of electrical power and control equipment as indicated on any accompanying data sheets and/or drawings, and shall be elevated and connected to concrete pad with platforms and stair access included, as shown on Drawings. Any data sheets, Drawings, or any other related documents accompanying this specification shall be considered a part of this specification.
3. Delegated Design.
4. Enclosure accessories.

B. Related Requirements:

1. Section 033000 “Cast-in-Place Concrete” for concrete foundation and pad.
2. Division 26 for electrical materials and equipment.

1.3 COORDINATION

A. Coordinate sizes and locations of concrete bases with actual equipment provided.

1.4 ACTION SUBMITTALS

A. Include with submittal copy of this specification confirming compliance with each paragraph.

B. Product Data: For each type of product.

1. Include product data sheets and catalog numbers for HVAC equipment, receptacles, lighting, and other accessories.

C. Shop Drawings:

1. Any quality plans, forms, or procedures deemed necessary by the customer.
2. Structural drawings including:

a. General notes.
b. Building plan view.
c. Building base skid detail.
d. Building elevations.
e. Stairs and landings details.
f. Structural calculations and drawings, for building enclosure, platforms, and stairs, signed and sealed be a professional engineer registered in the State of Texas.
g. Include details of equipment assemblies. Indicate dimensions, weights, loads, required clearances, method of field assembly, components, and location and size of each field connection.

3. Electrical drawings including:

a. Electrical notes.
b. Building electrical plan, showing conduit, cable tray, wire tray, subfloor wireway, and any other means of wiring transit. Drawings shall also include conduit fill.
c. Building services wiring diagrams.
d. Grounding system plan.
e. Include details of equipment assemblies. Indicate dimensions, weights, loads, required clearances, method of field assembly, components, and location and size of each field connection.

D. Calculations:

1. Heating and cooling calculations for sizing of HVAC units. Calculations shall include totaling heat rejection from internal equipment with a separate line item for from each piece of electrical, electronic, or any other heat producing equipment located in the space. Calculation of heat gain and heat loss through the building envelope shall performed using an ASHRAE approved calculation method, such as the Cooling Load Temperature Difference (CLTD) method or Radiant Time Series (RTS) method.
2. Lighting: For illuminance levels.

1.5 DELEGATED-DESIGN SUBMITTALS

A. Delegated-Design Submittal: For anchorage details of enclosure.

1. Section 014000 “Quality Requirements” for additional delegated design requirements.

B. Qualifications Statement: Submit qualifications for licensed professional.

1.6 INFORMATIONAL SUBMITTALS

A. Source quality-control reports.

B. Installation instructions.

C. Field quality-control reports.

D. Manufacturer’s warranties.

E. Building inspection certificate.

F. Seismic and/or Wind certifications as specified.

1.7 CLOSEOUT SUBMITTALS

A. Operation and Maintenance Data: For HVAC systems.

1.8 MAINTENANCE MATERIAL SUBMITTALS

A. Furnish the following extra materials that match products installed and packaged with protective covering for storage and identified with labels describing contents.

1.9 QUALITY ASSURANCE

A. Delegated Design Engineer: Licensed professional engineer experienced in design of specified Work and registered in the State of Project location.

B. Manufacturer of assembly must be ISO 9001 certified or have a quality management system in place comparable to the requirements of ISO 9001.

1. Successful bidder shall be prepared to submit for customer approval, any and/or all quality plans, forms, and procedures applicable to the manufacturer of the enclosure.

C. Manufacturer of this equipment shall have produced similar electrical equipment for a minimum period of five years. When requested by Engineer, an acceptable list of installations with similar equipment shall be provided demonstrating compliance with this requirement.

D. Provide Seismic tested equipment as follows:

1. Equipment and major components shall be suitable for and certified to meet all applicable seismic requirements of the International Building Code (IBC). Guidelines for the installation consistent with these requirements shall be provided by the motor control center manufacturer and be based upon testing of representative equipment. The test response spectrum shall be based upon a 5 percent minimum damping factor, IBC: a peak of 2.45g's (3.2-11 Hz) and a ZPA of 0.98g's applied at the base of the equipment. The tests shall fully envelop this response spectrum for all equipment natural frequencies up to at least 35 Hz.
2. Following minimum mounting and installation guidelines shall be met, unless specifically modified by the above referenced standards.

   a. Provide equipment anchorage details, coordinated with equipment mounting provision, prepared and stamped by a licensed civil engineer in the state. Mounting recommendations shall be provided by manufacturer based upon approved sake table tests used to verify the seismic design of the equipment.
   b. Equipment manufacturer shall certify that equipment can withstand, that is, function following the seismic event, including both vertical lateral required response spectra as specified in above codes per Structural Design Criteria on Contract Drawing S-1.

c. Equipment manufacturer shall document the requirements necessary for proper seismic mounting of the equipment. Seismic qualification shall be considered achieved when the capability of the equipment, meets or exceeds the specified response criteria.
d. Building enclosure and components (including anchorage diameter and embedment) shall be acceptable for wind design criteria as specified and certified by manufacturer.

1.10 DELIVERY, STORAGE, AND HANDLING

A. Ship power house, material, and spare parts complete except where partial disassembly is required by transportation regulations or for protection of components.

B. Protect finishes and components against damage, weather elements, and condensed water vapor. Do not remove protection until work area is substantially free of construction dust and debris.

C. Manufacturer shall supervise offloading at the site in the presence of Contractor.

1.11 WARRANTY

A. Special Warranty: Manufacturer's standard form in which manufacturer agrees to repair or replace fire extinguishers that fail in materials or workmanship within specified warranty period.

1. Failures include, but are not limited to, the following:

a. Failure of hydrostatic test according to NFPA 10.
b. Faulty operation of valves or release levers.

2. Warranty Period: Six years from date of Completion.

PART 2 - PRODUCTS

2.1 SYSTEM DESCRIPTION

A. Factory fabricated, all-weather walk-in enclosure with environmental control, specifically designed to house electrical equipment along with other equipment as indicated on Drawings. Provide all equipment and accessories unless otherwise noted.

B. Intended to be delivered to the project site as a complete assembly.

C. Intended to be off-loaded and installed at the project site with a crane making a single point lift using suitable rigging. Provide with appropriate lifting lugs and jacking plates.

D. Coordinate with actual dimensions of equipment to be installed in enclosure.

2.2 MANUFACTURERS

A. Manufacturer Qualifications: Same manufacturer as the motor control centers. Manufacturer takes complete responsibility for equipment or enclosures purchased from third parties.

B. Manufacturers: Subject to compliance with requirements, provide products by the following:

1. Eaton.
2. Square D.
3. Siemens.
4. GE.

2.3 PERFORMANCE REQUIREMENTS

A. Delegated Design: Engage a qualified professional engineer, as defined in Section 014000 "Quality Requirements.", to submit anchorage details of enclosure.

B. General Design Standards:

1. ASCE 7-02: Minimum Design Loads for Buildings and Other Structures.
2. Structural Design Criteria listed on Contract Drawing S-1.

2.4 GENERAL REQUIREMENTS

A. Electrical Walk-in Enclosure:

1. Enclosure shall be Type 304 stainless steel walk-in enclosure designed and constructed for outdoor use under wind and seismic load conditions per the IBC guidelines for the job site.
2. Building and all components mounted thereon shall be designed for and anchored sufficiently for transportation to the job site.
3. Skid shall be of all welded, seamless construction utilizing ASTM A123 hot dipped galvanized steel (HDG) members, sized and arranged for proper strength, and able to withstand the stress and loads which will result when lifting and complete factory fabricated and equipped assemblies. Welding shall be in accordance with the requirements of AWSD1.1. All welding shall be performed by welders certified through the 4G position. Suppliers shall be prepared to show welder’s certificates.

    a. Deflection shall be L/240. Building shall be suitable for installation on a concrete pad or on piers, as shown on the Drawings.
    b. Equip skid with two stainless steel ground pads located at opposite corners of skid.
    c. Provide skid with 8- to 10-mil coverage of bituminous mastic undercoating, where in contact with concrete.

4. Floor shall be a minimum of 1/4-inch H.R. ASTM A123 hot dipped galvanized steel (HDG) welded to the perimeter and longitudinal and/or transverse structural members of the skid. Floor loading shall be not less than 250 PSF.

a. Provide floor with floor cutouts where required for power and control cable entry/exit from the equipment. Provide cutouts with 13-gauge galvanized gasketed cover plates.

5. Building Construction:

a. Building interior walls, roof, and ceiling shall be fabricated from G90 galvanized steel. Exterior walls and exterior roof shall be Type 304 stainless steel. Interior and exterior walls, roof and interior ceiling shall be of self-framing, interlocking design, with maximum panel width of 16 inches. Buildings of framed construction are not acceptable.
b. Exterior Walls: Minimum of 18-gauge thickness but rated to withstand loading requirements of the job site.
c. Interior Walls: Minimum 18-gauge thickness but rated to withstand loading requirements of the job site.
d. Exterior Roof: Minimum of 18-gauge thickness but rated to withstand loading requirements of the job site. Slope roof at 1/4-inch per linear foot and sloped away from personnel doors.
e. Interior Ceiling: Minimum of 18-gauge thickness but rated to withstand loading requirements of the job site.

6. For a building which must be shipped in multiple shipping sections, miscellaneous NEMA 1 junction boxes will be provided at the shipping splits for easy breakdown of the building wiring for shipment and reconnection at the job site. Prior to shipment the open end/sides of each shipping section will be crated (weatherproofed) for transit to the job site. The crating must be performed by a company recognized and experienced in the trade.
7. Where wall bulkhead penetrations are required, the cutouts shall be completely framed with 1/4-inch aluminum cover plates with neoprene gasket. All the penetrations shall be made in the walls prior to bending with the appropriate machinery. No manual cutting of wall penetrations via jigsaw, plasma torch, etc., shall be permitted.
8. Fastening Hardware: Zinc plated. Welding of galvanized steel and rivets shall not be an acceptable method of exterior fastening.
9. Provide building with a minimum of two entrance doors. The doors shall be double wall construction, with brushed aluminum panic hardware exit device, brushed aluminum mortise lever lockset and trim including cylinder lock, keying is to be as selected by owner, brushed aluminum automatic closure with built-in hold open device, prime coat hinges, threshold built into the door frame, neoprene gasket, drip shields/water flashing, “DANGER, HIGH VOLTAGE, KEEP OUT” sign, and a 12-inch removable transom above the equipment door only. The personnel door shall be 36-inch by 84-inch. The equipment double door shall be 72-inch x 84-inch. Door hardware to comply with NFPA 101. Latches shall not require more than 15 lbf to release the latch.

a. When specified, the supplier shall provide landings and stairs for the building. Build stairs in compliance with the IBC code and shall be hot-dipped galvanized after fabrication.

10. For equipment requiring rear access, the supplier shall provide 14-gauge stainless steel, gasketed and hinged equipment rear access doors, with three-point latching system with stainless steel padlockable handles, “DANGER HIGH VOLTAGE” sign, and drip shields/water flashing.

11. The walls, roof and floor shall be fully insulated, with a minimum of R-11 batt insulation at wall locations and R-21 at the roof. The walls and roof shall be provided with fiberglass batt type insulation. The floor shall be provided with polyurethane spray foam insulation.
12. The building shall be provided with at least one wall-mounted package direct expansion (DX) type air conditioning unit with heat pump heating for each room (Electrical Room and Control Room). The units shall be provided and factory installed by the building manufacturer. The air conditioning units shall be provided with, supply and return grilles, low ambient cooling controls, high and low refrigerant pressure overloads, compressor short cycle delay timer, phenolic coated coils for corrosion resistance, blank off panels to close the outside air intake, at least two stages of cooling, and integral controls, contactors, and overloads for fans, compressors, heaters.

    a. Provide a thermostat or temperature controller with automatic switchover between heating and cooling modes. Cooling mode shall allow up to two stages of cooling per unit. All temperature set points shall be field adjustable. Switchover set point shall be field adjustable. The controller shall be wall mounted and shall accept 24VAC power from air conditioning unit being controlled.
    b. The air conditioning units shall be sized per heating and cooling calculations which shall be provided by the building manufacturer for review by Engineer. The air conditioning units shall be sized to meet the entire heating/cooling load of each room. The sensible cooling capacity (not the total cooling capacity) of the air conditioning units shall be selected to meet the sensible load of each room at the ambient design conditions.
    c. Cooling calculations shall include heat gained through the building envelope as well as heat rejection from all equipment in the space.
    d. Heating calculations shall include heat loss through building envelope and shall assume no heat rejection from equipment in the space.
    e. The indoor design conditions shall be a maximum of 85 degrees Fahrenheit in summer and a minimum of 55 degrees Fahrenheit in winter. The system shall be designed without outside air.
    f. The outdoor design conditions shall be 94.6 (dry bulb)/77.6 (wet bulb) degrees Fahrenheit in summer, and 28.5 (dry bulb) degrees Fahrenheit in winter based on 2013 ASHRAE Fundamentals, Climatic Design Information for Georgetown, TX.

13. Provide building with portable, hand-carried fire extinguishers.

    a. Quality Assurance:

        1) NFPA Compliance: Fabricate and label fire extinguishers to comply with NFPA 10, "Portable Fire Extinguishers".
        2) Fire Extinguishers: Listed and labeled for type, rating, and classification by an independent testing agency acceptable to authorities having jurisdiction.

            a) Provide fire extinguishers approved, listed, and labeled by FMG.

    b. Fire Extinguishers: Type, size, and capacity required by applicable codes.

        1) Manufacturers: Provide products by one of the following or equal.

            a) Amerex Corporation.

b) Ansul Incorporated; Tyco International Ltd.
c) Badger Fire Protection; a Kidde company.
d) Buckeye Fire Equipment Company.
e) Fire End & Croker Corporation.
f) J. L. Industries, Inc.; a division of Activar Construction Products Group.
g) Larsen's Manufacturing Company.
h) Potter Roemer LLC.

2) Valves: Manufacturer's standard.
3) Handles and Levers: Manufacturer's standard.
4) Instruction Labels: Include pictorial marking system complying with NFPA 10, Appendix B.

c. Carbon Dioxide Type: UL-rated 10-B:C, 10-lb nominal capacity, with carbon dioxide in enameled-steel container.
d. Location and Travel Distance: Place portable fire extinguishers as required by applicable codes. Locate portable fire extinguishers in conspicuous locations where they will be readily accessible and immediately available for use. These locations shall be along normal paths of travel, unless fire code official determines that hazard posed indicates need for placement away from normal paths of travel. Travel distance shall not exceed 30 feet or code requirements as determined by fire code official, whichever is more stringent.
e. Hangers and Brackets: Hand-held portable fire extinguishers, not housed in cabinets, shall be installed on the hangers or brackets supplied. Hangers or brackets shall be securely anchored to the mounting surface in accordance with the manufacturer's installation instructions. Mounting Brackets: Manufacturer's standard galvanized steel, designed to secure fire extinguisher to wall or structure, of sizes required for types and capacities of fire extinguishers indicated, with plated or red baked-enamel finish.

1) Manufacturers: Provide brackets and extinguishers by same manufacturer.

f. Identification: Lettering complying with authorities having jurisdiction for letter style, size, spacing, and location. Locate as indicated by Engineer.
g. Identify bracket-mounted fire extinguishers with the words "FIRE EXTINGUISHER" in red letter decals applied to mounting surface.

1) Orientation: Vertical.

14. This Division shall furnish electrical distribution equipment as shown on Drawings.
15. The building shall be provided with interior LED lighting fixtures, controlled via wall switches to be located at each entry door, as shown on Drawings.
16. The building shall be provided with 120V, 20A duplex receptacles as shown on Drawings.
17. The building shall be provided with exterior LED lights at each entry door, controlled via integral photocell, as shown on Drawings.
18. Wiring shall be as specified in Section 260519 “Low-Voltage Electrical Power Conductors and Cables” and 260523 “Control-Voltage Electrical Power Cables”. For all control interconnection wiring, both ends of the wire shall be provided with polyolefin sleeve type wire markers.

19. Conduit shall be as specified under Section 260533 “Raceways and Boxes for Electrical Systems”.
20. Provide 1/4-inch x 2-inch copper ground bar running length of building, mounted approximately 6 inches above floor and connected to each end of equipment ground bar. Provide a #4/0 green insulated copper ground cable from ground bar to exterior ground pads. Provide a green insulated copper ground wire/cable from ground bar to auxiliary electrical equipment per NEC Table 250-95.

2.5 MARKING AND IDENTIFICATION

A. Control wiring: Identify at each end with type-written heat shrinkable wire markers.

B. Load Centers and Panelboards: Type written directory.

C. “Danger High Voltage / Keep Out” Signs: On each door.

2.6 SURFACE PREPARATION AND SHOP COATINGS

A. Clean non-current carrying metal parts of enclosure of weld spatter and other foreign material and provide hot iron phosphate chemical treatment.

B. Utilize manufacturer’s standard procedures and processes.

C. Paint entire outdoor exterior assembly with same color (i.e., either ANSI 61 or ANSI 49).

2.7 SOURCE QUALITY CONTROL

A. Accessory system components shall be completely factory assembled, wired, and tested prior to shipment.

B. Test and inspect assembled equipment, by a qualified testing agency, for building code compliance. Affix certification label.

C. Prepare test and inspection reports.

PART 3 - EXECUTION

3.1 INSTALLATION

A. Install enclosure on concrete pad, level to manufacturer’s tolerances.

B. Use Type 316 stainless steel hardware if exposed to outdoor conditions.

C. Anchor enclosure per manufacturer’s instructions.

D. Remove temporary lifting angles, lugs, and shipping braces. Cover holes.

E. Touch up damaged paint finishes.

F. Make wiring interconnections as required.

G. Caulk seams, cracks, and openings to exterior.

3.2 ADJUSTING

A. Adjust doors and hardware to operate smoothly, easily, properly, and without binding. Confirm that locks engage accurately and securely without forcing or binding.

B. Adjust interior and exterior lighting controls.

C. Lubricate hardware and other moving parts.

1. After completing installation, inspect exposed finishes and repair damaged finishes.

3.3 TESTING AND INSPECTION

A. Perform following testing and inspection on the building:

1. Where applicable, continuity checks of all wiring installed by the supplier.
2. Operational check of all supplier-furnished and installed electrical apparatus.
3. A certified test report shall be provided by the supplier.

END OF SECTION 266100

© 2023 CDM Smith
All Rights Reserved

SECTION 310515 - SOILS AND AGGREGATES FOR EARTHWORK

PART 1 - GENERAL

1.1 RELATED DOCUMENTS

A. Drawings and general provisions of the Contract, including General and Supplementary Conditions and Division 01 Specification Sections, apply to this Section.

1.2 SUMMARY

A. Section Includes:

1. Soils: Soil materials and topsoil materials.
2. Aggregates: Coarse aggregate materials and fine aggregate materials.

B. Related Sections:

1. City of Georgetown Standard Specifications.
2. Section 312000 “Earthwork.”
3. Section G4 “Pipe Excavation, Trenching, Embedment, Encasement and Backfilling.”
4. Section G5 “Granular Fill Materials.”
5. Section G6 “Sedimentation and Temporary Erosion Control.”

1.3 ACTION SUBMITTALS

A. Samples - Soils: Submit in 5-gallon air-tight containers, 50 lbs. sample of each type of fill to testing laboratory when requested by Owner or Engineer.

B. Samples - Aggregates: Submit, in 5-gallon air-tight containers, 50 lbs. sample of each type of aggregate fill to ENGINEER at least 15 days prior to placement of backfill or fill when requested by Owner or Engineer.

C. Quality Control Testing: Submit conformance testing performed by a certified independent laboratory engaged by Contractor for all fill materials. Verify maximum density, gradation, Atterberg limits, sand equivalent, and other applicable criteria at least 72 hours prior to importing or placing any fill. Perform additional conformance testing at a minimum frequency of 1 per every 2,000 cubic yards or change in material.

1.4 INFORMATIONAL SUBMITTALS

A. Materials Source: Submit name and location of imported materials suppliers.

B. Source’s Certificate: Certify materials meet or exceed specified requirements.

C. Material Test Reports: For each on-site and borrow soil and aggregate material proposed for fill and backfill as follows:

1. Classification according to ASTM D2487.
2. Laboratory compaction curve according to ASTM D698 and TEX-113-E.
3. Grain size analyses according to ASTM D422.
4. Atterberg limits (liquid limit, plastic limit, and plasticity index) per ASTM D4318.
5. Test Reports: Submit any test reports required by this Section to Engineer.

1.5 QUALITY ASSURANCE

A. Furnish each subsoil and topsoil material from single source throughout the Work, unless an alternate source is approved by the Engineer.

B. Furnish each coarse and fine aggregate material from single source throughout the Work, unless an alternate source is approved by the Engineer.

C. Perform Work according to City of Georgetown Standard Specifications.

D. Quality Control and Quality Assurance consists of laboratory conformance testing of samples supplied from each coarse and fine aggregate source and quality control during installation.

1. Geotechnical Testing Agency Qualifications: Qualified according to ASTM E329 and ASTM D3740 for testing indicated.

1.6 FIELD CONDITIONS

A. Traffic: Minimize interference with adjoining roads, streets, walks, and other adjacent occupied or used facilities during earth-moving operations.

1. Do not close or obstruct streets, walks, or other adjacent occupied or used facilities without permission from Owner and authorities having jurisdiction.
2. Provide alternate routes around closed or obstructed traffic ways if required by Owner or authorities having jurisdiction.

B. Tree and Plant Protection Zones: Comply with requirements and measures specified in Section 015639 "Temporary Tree and Plant Protection."

PART 2 - PRODUCTS

2.1 SOIL MATERIALS

A. Common Fill:

1. Meet all requirements of common fill in Section G5 “Granular Fill Materials” and supplemented herein.
2. Approved onsite excavated material or imported fill material that is composed of durable soil free of debris, organic matter, or other deleterious materials.

3. Not contain stones larger than 4 inches in largest diameter, have a maximum of 75 percent passing the No. 200 sieve, and a maximum dry density of at least 85 pounds per cubic foot (pcf) as determined by ASTM D698.
4. Not contain granite blocks, broken concrete, masonry rubble, asphalt pavement or other similar materials and have physical properties such that it can be readily spread and compacted during filling.

B. Select Common Fill:

1. Meeting all requirements of select common fill in Section G5 "Granular Fill Materials" and as specified above for common fill.

C. Select Structural Fill: flexible base material complying with TxDOT Item 247, Type A, Grade 3 or better.

D. Concrete pavement and HMA subbase: material complying with TxDOT Item 247, Type A, Grade 1-2.

E. Impervious Fill (Clay Cap):

1. Be classified as a CL or CH soil according to the Unified Soil Classification System (USCS) in accordance with ASTM D2488.
2. Have a liquid limit of at least 30 percent and a plasticity index between 20 and 60 percent.
3. Have less than 5 percent organic content in accordance with ASTM D2974.
4. Percent passing per Sieve Size:

   a. 1.5 inch 100 percent.
   b. No. 200 50 percent.

2.2 TOPSOIL MATERIALS

A. Topsoil: Conforming to the City of Georgetown Standard Specification G7.03.

1. Excavated and reused material or imported borrow.
2. Fertile, friable, natural topsoil typical of topsoil of the locality.
3. Free of roots, rocks larger than 1/2-inch, subsoil, debris, large weeds, and foreign matter.

   a. Screening: Single screened.

4. Containing minimum of 3 percent and maximum of 25 percent inorganic matter.

2.3 AGGREGATE MATERIALS

A. Coarse Aggregate - Crushed Stone: Natural stone; washed, free of clay, shale, organic matter; conforming to ASTM C33 standard.

1. Coarse Aggregate Designation: No. 57.

B. Coarse Aggregate - Roadway Base: Natural stone; washed, free of clay, shale, organic matter; conforming to State of Texas DOT standard Item 247, Type A, Grade 1.

1. Coarse Aggregate Designation: Type A Flexible Base.

C. Coarse Aggregate - Screened Gravel: Natural stone; washed, hard, durable, rounded, or sub-angular particles of proper size and gradation, and shall be free from sand, loam, clay, excess fines, and other deleterious materials, and contain no more than 5 percent by weight of any one or combination of slate, schist, or soft particles of sandstone. Screened gravel is to conform to the following gradation limits:

1. Percent Passing per Sieve Size:

a. 5/8- inch: 100 percent.
b. 1/2-inch: 40 to 100 percent.
c. 3/8-inch: 15 to 45 percent.
d. No. 10: 0 to 5 percent.

D. Coarse Aggregate - Pea Gravel: Natural stone; washed, free of clay, shale, organic matter; graded according to ASTM C136; to the following limits:

1. Percent Passing per Sieve Size:

a. 1/2- inch: 100 percent.
b. 3/8-inch: 90 percent.
c. No. 4: 30 percent.
d. No. 8: 10 percent.
e. No. 16: 5 percent.

E. Fine Aggregate - Sand: Natural river or bank sand; washed; free of silt, clay, loam, friable or soluble materials, and organic matter; graded according to ASTM C33; within the following limits:

1. Percent Passing per Sieve Size:

a. 3/8-inch: 100 percent.
b. No. 4: 95 to 100 percent.
c. No. 8: 80 to 100 percent.
d. No. 16: 50 to 85 percent.
e. No. 30: 25 to 60 percent.
f. No. 50: 10 to 30 percent.
g. No. 100: 2 to 10 percent.

2.4 SOURCE QUALITY CONTROL

A. Testing and Inspection Services: Submit test result reports to Engineer.

B. Subsoil Material - Testing and Analysis: Perform in accordance with ASTM D698.

C. Topsoil Material - Testing and Analysis: Perform in accordance with ASTM D698.

D. Aggregate Material - Testing and Analysis: Perform according to ASTM D698 and TEX-113-E, as specified elsewhere.

E. When tests indicate materials do not meet specified requirements, change material and retest.

F. Furnish materials of each type from same source throughout the Work.

PART 3 - EXECUTION

3.1 EXCAVATION

A. Excavate subsoil and topsoil from areas designated. Strip topsoil to full depth of topsoil in designated areas.

B. Stockpile excavated material meeting requirements for subsoil materials and topsoil materials.

C. Remove excess excavated materials not intended for reuse, from site.

D. Remove excavated materials not meeting requirements for subsoil materials and topsoil materials from site.

3.2 STOCKPILING

A. Stockpile materials on site at locations designated by Engineer or Owner's representative.

B. Stockpile in sufficient quantities to meet Project schedule and requirements.

C. Separate different soil and aggregate materials with dividers or stockpile individually to prevent mixing. Prevent intermixing of soil types or contamination.

D. Stockpile topsoil 8 feet high maximum.

E. Direct surface water away from stockpile site to prevent erosion or deterioration of materials.

3.3 STOCKPILE CLEANUP

A. Remove stockpile, leave area in clean and neat condition. Grade site surface to prevent free standing surface water.

END OF SECTION 310515

© 2023 CDM Smith
All Rights Reserved

This page intentionally left blank.

© 2023 CDM Smith
All Rights Reserved

SECTION 310519.13 - GEOTEXTILES FOR EARTHWORK

PART 1 - GENERAL

1.1 RELATED DOCUMENTS

A. Drawings and general provisions of the Contract, including General and Supplementary Conditions and Division 01 Specification Sections, apply to this Section.

1.2 SUMMARY

A. Section Includes:

1. Woven geotextile material.
2. Nonwoven geotextile material.

B. Related Requirements:

1. City of Georgetown Standard Specifications.
2. Section 31 05 15 “Soils and Aggregates for Earthwork” for fill and grading materials.
3. Section G5 “Granular Fill Materials” for fill and grading materials.
4. Section 31 20 00 “Earthwork” for excavation and backfilling procedures.
5. Section G4 “Pipe Excavation, Trenching, Embedment, Encasement and Backfilling” for trenching and backfilling procedures.
6. Section G6 “Sedimentation and Temporary Erosion Control” for erosion and sedimentation control devices.

1.3 ACTION SUBMITTALS

A. Submit items in this Article at least 30 days prior to installation.

B. Product Data: Submit certified test results from the manufacturer including tensile strength, elongation, thickness, UV resistance, and other material properties.

C. Shop Drawings: Indicate fabric layout, seam locations, and overlap details in installation drawings. Provide installation schedule.

1.4 INFORMATIONAL SUBMITTALS

A. Manufacturer's Certificate: Certify that products meet or exceed specified requirements.

B. Manufacturer Instructions: Submit detailed instructions on installation requirements, including storage and handling procedures and quality control and quality assurance.

C. Manufacturer’s quality control program and manual, including a description of laboratory facilities.

D. Source Quality-Control Submittals: Provide results of factory tests and inspections, including test results that indicate materials meet the requirements of PART 2.

E. Field Quality-Control Submittals: Provide results of Contractor-furnished tests and inspections.

F. Qualifications Statements:

1. Submit qualifications for manufacturer and installer.
2. Submit manufacturer's approval of installer.

1.5 CLOSEOUT SUBMITTALS

A. Project Record Documents: Record actual locations of geotextile material, including placement depth.

1.6 QUALITY ASSURANCE

A. Perform Work according to City of Georgetown standards and the recommendations of the Manufacturer.

1.7 QUALIFICATIONS

A. Manufacturer: Company specializing in manufacturing products specified in this Section with minimum three years' experience.

B. Installer: Company specializing in performing Work of this Section with minimum three years' experience.

1.8 DELIVERY, STORAGE, AND HANDLING

A. Inspection: Accept materials on Site in manufacturer's original packaging that identifies the manufacturer/supplier’s name, style, and roll number. Inspect for damage.

B. Comply with ASTM D4873.

C. Store materials according to manufacturer instructions.

D. Protection:

1. Protect materials from moisture, dust, chemicals, UV radiation or other environmental conditions that might damage the geotextile by storing at least 3 inches off the ground in a clean, dry location remote from construction operations areas.
2. Provide additional protection according to manufacturer instructions.

PART 2 - PRODUCTS

2.1 MATERIALS - WOVEN GEOTEXTILES

A. Description:

1. Non-biodegradable, non-reactive (for pH of three to eleven), UV-resistant, insect/rodent-resistant woven monofilament material consisting of polypropylene formed into a stable network.
2. Edges: Selvaged or finished to prevent separation of outer material.

B. Performance and Design Criteria:

1. When tested in accordance with ASTM D4759, test results from any sampled roll in the lot shall meet or exceed the values listed in Table 1. Strength values are in the weaker principal direction.

TABLE 1: WOVEN GEOTEXTILE MINIMUM AVERAGE ROLL VALUES FOR WOVEN FABRICS

PROPERTIES	TEST METHOD	UNIT	MINIMUM AVERAGE ROLL VALUES	
			Machine Direction (MD)	Cross Direction (CD)
Wide Width Tensile Strength	ASTM D4595	lbs/in	270	270
Grab Strength	ASTM D4632	lbs	400	315
Grab Elongation	ASTM D4632	percent	15	15
Trapezoid Tear Strength	ASTM D4533	lbs	150	165
Mass per Unit Area	ASTM D5261	oz/yd2	8.8	
Puncture Strength	ASTM D6241	lbs	1,150	
UV Resistance	ASTM D4355	percent strength retained	90	
Apparent Opening Size (Max)	ASTM D4751	US Std. Sieve	40	
Percent Open Area (POA)	CW-02215 Mod.	percent	1	
Permittivity	ASTM D4491	sec-1	0.9	
Water Flow Rate	ASTM D4491	gpm/ft2	70	

2.2 MATERIALS - NONWOVEN GEOTEXTILES

A. Description:

1. Non-biodegradable, non-reactive (for pH of three to eleven), UV-resistant, insect/rodent-resistant nonwoven needle punched material consisting of filaments formed into a stable network.
2. Edges: Selvaged or finished to prevent separation of outer material.

B. Performance and Design Criteria:

1. When tested in accordance with ASTM D4759, test results from any sampled roll in the lot shall meet or exceed the values listed in Table 2. Strength values are in the weaker principal direction.

TABLE 2: NONWOVEN GEOTEXTILE MINIMUM AVERAGE ROLL VALUES

PROPERTIES	TEST METHOD	UNIT	MINIMUM AVERAGE ROLL VALUES
Thickness	ASTM D5199	mils	55
Grab Strength	ASTM D4632	lbs	120
Grab Elongation	ASTM D4632	percent	50
Trapezoid Tear Strength	ASTM D4533	lbs	50
Puncture Strength	ASTM D4833/D6241	lbs	310
Water Flow Rate	ASTM D4491	gpm/ft2	135
Permittivity	ASTM D4491	sec-1	1.7
Apparent Opening Size (Max)	ASTM D4751	inch US Std. Sieve	0.008 70
UV Resistance	ASTM D4355	percent strength retained	70

2.3

2.3 MATERIALS - ACCESSORIES

A. Use products to secure geotextile fabrics as recommended by geotextile manufacturer.

2.4 SOURCE QUALITY CONTROL

A. If requested by Owner, provide materials for Quality Assurance Laboratory (QAL) testing by an independent GRI accredited laboratory to confirm conformance testing results.

PART 3 - EXECUTION

3.1 EXAMINATION AND PREPARATION

A. Engineer or Owner's representative shall inspect subgrade to verify that underlying surface is smooth and free of ruts or protrusions that could damage geotextile material and that subgrade has been properly prepared.

B. Subgrade Material and Compaction Requirements: As specified in Section G4 "Pipe Excavation, Trenching, Embedment, Encasement and Backfilling" or 312000 "Earthwork".

C. Proceed with installation only after unsatisfactory conditions have been corrected.

3.2 INSTALLATION

A. Comply with manufacturer's published installation instructions. Do not install damaged materials.

B. Geotextile Material:

1. Lay and maintain smooth and free of tensile stresses, folds, wrinkles, or creases.
2. Ensure that material is in direct contact with subgrade.
3. Orientate with long dimension of each sheet parallel to direction of slope and in accordance with the manufacturer’s recommendations and approved shop drawings.
4. Minimum Unseamed Joints Overlap: 24 inches unless otherwise indicated.

C. Securement Pins or Staples:

1. Insert through geotextile midway between edges of overlaps and minimum 6 inches from free edges.
2. Minimum Spacing:

   a. Slopes Steeper than 3 Horizontal on 1 Vertical: 24 inches o.c.
   b. Slopes 3 Horizontal on 1 Vertical to 4 Horizontal on 1 Vertical: 3 feet o.c.
   c. Slopes Flatter than 4 Horizontal on 1 Vertical: 5 feet o.c.

3. Ensure that washer bears against geotextile.

D. Field Seams:

1. Minimum Seamed Joints Overlap: 12 inches at longitudinal and transverse joints.
2. Seams across Slope: Lap upper panel over lower panel.
3. Sewn Seams:

   a. Continuously sew seams on slopes steeper than 1 vertical on 3 horizontal.
   b. Stitch Type: As recommended by geotextile manufacturer.
   c. Tie off thread at the end of each seam to prevent unraveling.

4. Thermal Seams:

   a. As recommended by geotextile manufacturer.
   b. Comply with ASTM D4886.

E. Penetrations: As recommended by geotextile manufacturer.

F. Repairing Damaged Geotextiles:

1. Repair torn or damaged geotextile by placing patch of same type of geotextile over damaged area minimum of 12 inches beyond edge of damaged area and fasten as recommended by geotextile manufacturer.
2. Remove and replace geotextile rolls which cannot be repaired.

G. Fill and Cover:

1. Place fill to prevent tensile stress or wrinkles in geotextile.

2. Place fill from bottom of side-slopes upward.
3. Do not drop fill from height greater than 3 feet.

3.3 FIELD QUALITY CONTROL

A. Acceptance:

1. Engineer or Owner's representative will inspect installation and identify repairs or modifications necessary to perform as specified.
2. Make final adjustments and repairs under direction of Engineer or manufacturer's representative.

3.4 PROTECTION

A. Ballast: Adequate to prevent uplift of material by wind.

B. UV Exposure: Do not leave material uncovered for more than 14 days after installation.

C. Do not use staples or pins to hold geotextiles in place where located adjacent to other geosynthetic layers that could be damaged.

D. Do not operate equipment directly on top of geotextile.

END OF SECTION 310519

© 2023 CDM Smith
All Rights Reserved

SECTION 312000 – EARTHWORK

PART 1 - GENERAL

1.1 RELATED DOCUMENTS

A. Drawings and general provisions of the Contract, including General and Supplementary Conditions and Division 01 Specification Sections, apply to this Section.

1.2 SUMMARY

A. General: Earthwork includes clearing and stripping, procurement of on-site and imported fill material, excavating, placing, and compacting fill and backfill, structural excavating and backfilling, transportation, and storage of excess earthwork materials; disposal of unsuitable, waste, and surplus materials; restoration of excavation and trench surfaces; and subsidiary work necessary to complete the grading of developed areas to conform with required lines, grades, and slopes.

B. Work includes but is not necessarily limited to; excavation for structures, tanks, foundations, manholes, vaults, electrical manholes, conduits, cables, raceways and ducts, pipes, paving; embankments; grading; and related work such as sheeting, bracing, and dewatering.

C. Provide services of a licensed Professional Engineer, registered in the State of Texas, to prepare temporary excavation support system, dewatering system designs, and submittals.

D. Provide temporary excavation support systems, including sheeting, shoring, and bracing, to ensure the safety of personnel and protect adjacent structures, piping, and other materials in accordance with Federal, State, and local laws, regulations, and requirements. Temporary excavation support systems are specified in Section 315000 “Excavation Support and Protection.”

E. Provide temporary dewatering, surface water control systems, and operate to dewater and maintain excavations in a dry condition. Control drainage into excavations and remove seepage water and rainwater. Dewatering and surface water control are specified in Section 31 23 19 “Dewatering.”

F. Examine site and review available geotechnical report prior to submitting a proposal, taking into consideration project conditions that may affect the work. Owner and Design Engineer do not assume responsibility for variations of subsurface conditions at locations other than places shown and at the time investigations were made.

G. Owner to provide field testing for compaction of subgrade and fill materials by an independent testing laboratory. The costs of this testing to confirm compliance with this Section will be paid by Owner. Should any test fail to meet the requirements of this section, that work shall be repaired and retested. Retesting will be at the Contractor’s expense.

H. Do not initiate extra work without written notification to Owner and Engineer and receiving Owner’s written approval in response.

I. Excavation includes material of every description and of whatever substance encountered regardless of the methods or equipment required to remove the materials.

J. Protect existing structures and utilities that remain.

K. Related Requirements:

1. Section G5 “Granular Fill Materials” for fill materials.
2. Section 310515 “Soils and Aggregates for Earthwork” for fill materials.
3. Section 310519.13 “Geotextiles for Earthwork” for geotextile materials.
4. Section G3 "Site Clearing" for site preparation work, including stripping, grubbing, stripping and stockpiling topsoil, and removal of above- and below-grade improvements and utilities.
5. Section 310900 “Geotechnical Instrumentation and Monitoring” to measure earthwork activities.
6. Section G4 “Pipe Excavation, Trenching, Embedment, Encasement and Backfilling” for stated work.
7. Section 312316 “Rock Removal” for excavation of rock and boulders.
8. Section 312319 "Dewatering" for controlling surface and groundwater and disposing of water during construction.Section 312323 "Flowable Fill”
9.
10. Section G6 “Sedimentation and Temporary Erosion Controls” for temporary stated work.
11. Section 315000 "Excavation Support and Protection" for shoring, bracing, and sheet piling of excavations.

1.3 DEFINITIONS

A. Backfill: Soil material or controlled low-strength material used to fill an excavation.

1. Initial Backfill: Backfill placed beside and over pipe in a trench, including haunches to support sides of pipe.
2. Final Backfill: Backfill placed over initial backfill to fill a trench.

B. Borrow Soil: Satisfactory soil imported from off-site for use as fill or backfill.

C. Coverage: Pass of compaction equipment over the complete surface area of exposed lift or subgrade to receive compaction.

D. Excavation: Removal of material encountered above subgrade elevations and to lines and dimensions indicated.

1. Authorized Additional Excavation: Excavation below subgrade elevations or beyond indicated lines and dimensions as directed by Engineer. Authorized additional excavation and replacement material will be paid for according to Contract provisions for changes in the Work.
2. Unauthorized Additional Excavation: Excavation as directed by Engineer to correct Contractor’s work not in compliance with Contract Documents, which will be performed without additional compensation.
3. Bulk Excavation: Excavation more than 10 feet in width and more than 30 feet in length.

4. Unauthorized Excavation: Excavation below subgrade elevations or beyond indicated lines and dimensions without direction by Engineer. Unauthorized excavation, as well as remedial work directed by Engineer, shall be provided without additional compensation.

E. Finished Grade: Required final grade elevation indicated on Drawings. Spot elevations take precedent over proposed contours.

F. In-the-Dry: An excavation subgrade where groundwater level: has been lowered to at least 2 feet below lowest level of excavation; is stable with no ponded water, mud, or muck; is able to support construction equipment without rutting or disturbance; and is suitable for placement and compaction of fill material, pipe, or concrete foundations.

G. Objectionable Material: Includes topsoil, organic matter, contaminated soil, construction debris, perishable materials, snow, ice, frozen earth, and rocks or lumps of cemented soils over 6 inches in maximum dimension.

H. Optimum Moisture Content: Moisture content (percent by dry weight) corresponding to maximum dry density of the same material as determined by ASTM Test Method D698.

I. Overexcavation: Removal of unsuitable soil or objectionable material at or below the normal grade of excavation or subgrade as indicated on Drawings.

J. Percent Compaction: Required in-place dry density of the material, expressed as a percentage of the maximum dry density of the same material, as determined in the laboratory by ASTM Test Method D698.

K. Structural Fill: Backfill which is placed against the exterior side of the structure walls.

L. Structures: Buildings, wet wells, footings, foundations, retaining walls, slabs, tanks, curbs, mechanical and electrical appurtenances, manholes and vaults, or other man-made stationary features constructed above or below the ground surface.

M. Subgrade: Required surface of subsoil, borrow fill, or compacted fill that is immediately beneath site improvements, especially dimensioned fill, paving, or other surfacing material.

N. Unsuitable Soil: Includes existing fill materials, organic soils, weak native soils, or clays with a plasticity index of greater than 30, and any materials that cannot be properly placed and compacted as specified.

O. Utilities: On-site underground pipes, conduits, ducts, and cables as well as underground services within buildings.

P. Zone of Influence: A line extending at least 2 feet beyond foundation or pipeline edge, then outward and downward at a slope of 1 horizontal to 1 vertical. Do no excavation below foundation of existing structures or pipeline.

Q. Professional Engineer: Professional Engineer registered in State of Texas, meeting project qualifications, and who is hired by Contractor.

R. Professional Geologist: Registered Professional Geologist meeting project qualifications and who is hired by Contractor.

S. Qualified Geophysical Testing Firm: A firm with a Professional Geologist licensed in the State of Texas with a minimum of 5 years of experience performing geophysical testing, including ground penetrating radar (GPR) and other applicable test methods to identify potential subsurface voids. This firm will be hired by the Contractor and is to provide independent site evaluation.

T. The Engineer: The Engineer or designated representative hired by Owner.

1. Approval given by the Engineer shall not relieve Contractor of its responsibilities for performing the work in accordance with Contract Document requirements.

1.4 ACTION SUBMITTALS

A. Coordinate various submittal types required by this Section with requirements of dewatering, support of excavation, rock removal, and geotechnical instrumentation submittals specified in other Sections.

B. Slope Stability Evaluation: Submit a temporary excavation slope stability evaluation in accordance with OSHA for temporary slopes over 20 feet in height or where existing or proposed facilities or property limits are located at the top of the slope and within a distance from the top of the slope equal to the slope height.

1. Prepare evaluation by a licensed Professional Engineer registered in the State of Texas.

C. Site Characterization Data: Submit following information regarding off-site source and material:

1. Site location.
2. Present and past usage of the source site and material.
3. Previously existing reports associated with an assessment of source site relating to presence of oil or other hazardous materials.
4. Location within the site from which the material will be obtained.

D. Samples: Submit a representative sample weighing approximately 50 pounds of each fill material, filter sand, and crushed stone contained in sealed 5 gallon containers, at least 30 calendar days prior to date of anticipated use of each material.

E. Submit laboratory test results for fill materials that include maximum density, gradation, Atterberg limits, sand equivalent, and other applicable criteria, at least 72 hours prior to importing or placing fill.

F. Prepare excavation support system designs by a licensed Professional Engineer, registered in State in which the work is located and having a minimum of 5 years of professional experience in design and construction of excavation support systems.

1. Submit an original and three copies of licensed Professional Engineer's certification, on PE form specified in Section 01 33 00 “Submittal Procedures,” stating excavation support systems designs have been prepared by Professional Engineer who is responsible for their execution.

G. Excavation Subgrade Geophysical Evaluation: Contractor's independent geophysical testing firm to perform geophysical evaluation of the completed structure excavation subgrades. Contractor to submit:

1. Geophysical firm's qualifications to perform GPR testing or other applicable geophysical testing and evidence of minimum past project experience for firm's ability to detect potential subsurface void spaces.
2. Qualifications of the Professional Geologist in charge of performing and interpreting geophysical test results.
3. Geophysical testing plan proposed for the Project, including excavations to be investigated, equipment and work procedures to be utilized/followed and confirmation sequence of investigation has been coordinated with Contractor's construction schedule.
4. Geophysical Summary Report, sealed by Contractor's Professional Geologist, licensed in the State of Texas, that includes all geophysical results and interpretation of potential voids. All reports are to be submitted to Engineer for review in a timely manner but no greater than 1 week following completion of data collection to minimize construction schedule impacts. Backfilling operations are not to be performed until confirmation is provided by Engineer that no void mitigation measures are required at the subgrades investigated.

1.5 INFORMATIONAL SUBMITTALS

A. Construction and Operations Plan: Submit proposed methods of construction, including earthwork operations, excavation limits, slopes, fill material moisture conditioning and handling, compaction equipment, excavation support systems designs, backfilling and filling and compaction, and material sources.

1. Include additional submittal requirements related to schedule, work sequence, and on-site and off-site storage when necessary, based on project conditions, including geophysical investigation work.
2. Submit excavation support system plan as prepared by registered Professional Engineer complying with requirements stated in previous Article.

B. Submit copies of field daily reports by soil technician at the end of each workday that earthwork and grading operations occur.

C. Upon completion of earthwork and grading operations, submit an as-graded map showing density test numbers and locations, a table of density test results and depths, and a certification of compliance by geotechnical engineer in charge.

D. Qualification Data: For qualified testing agency to conduct geotechnical observation, testing and documentation. include qualifications of firm, resumes of soil technicians assigned to the project, and licensed geotechnical engineer in charge.

1. Firm Qualifications: Meet ASTM D3740.
2. Soil Technicians: Have minimum three years demonstrated experience in earthwork and grading operations and satisfy certification requirements of agency having local jurisdiction.

a. The Engineer reserves right to request substitution of soil technicians assigned to field work. Do not substitute assigned soil technicians without prior approval of the Engineer.

E. Pre-excavation Photographs or Videotape: Show existing conditions of adjoining construction and site improvements, including finish surfaces that might be misconstrued as damage caused by earthwork operations. Submit before earthwork begins.

1.6 QUALITY ASSURANCE

A. Excavation, trenching, sheeting, bracing, and similar work shall comply with requirements of OSHA excavation safety standards, 29 CFR Part 1926 Subpart P and State and local authorities having jurisdiction. Where conflict between OSHA, State and local regulations exists, apply most stringent requirements.

B. At least three working days prior to starting any excavation, notify the appropriate regional notification center for underground utilities and underground utility owners who are not members of notification center. To obtain area specific information for project site, refer to www.texas811.com.

C. Quality Control Testing for Off-site Borrow Materials:

1. Chemical testing will not be required where site characterization of off-site borrow sources indicates that soils are acceptable for use. If site characterization data or materials are suspected of being contaminated, perform chemical testing as directed by The Engineer with no additional compensation.
2. Chemical Test Data: Test each material source requiring testing by a person experienced in sample collection who is a registered Professional Engineer or geologist, or certified groundwater or environmental professional registered in the State of Texas. Submit samples of each proposed material to a chemical analytical laboratory, certified by the governing agency, for following analyses:

   a. Volatile Organic Compounds: EPA 8240 plus Hazardous Substance List (HSL) Parameters.
   b. Acid and Base Neutral Extractable Organic Compounds: EPA 8270.
   c. Pesticides and PCBs: EPA 8080.
   d. Total Petroleum Hydrocarbons: Infrared Method, EPA 9071/418.1.
   e. Thirteen Priority Pollutant Metals: EPA 7000 Series.
   f. Total Cyanide: EPA 9012.

3. Obtain and test off-site borrow samples in accordance with criteria established by the Engineer. Submit results for review and approval prior to use on site.

1.7 FIELD CONDITIONS

A. Be responsible for construction layout and reference staking necessary for proper control and satisfactory completion of structures, cutting, filling, grading, drainage, fencing, embankment improvements, curbing, and other appurtenances.

B. Perform construction layout and staking by a Professional Surveyor or Professional Engineer registered in State of Texas, experienced and skilled in construction layout and staking requirements.

C. Traffic: Minimize interference with adjoining roads, streets, walks, and other adjacent occupied or used facilities during earthwork operations.

1. Do not close or obstruct streets, walks, or other adjacent occupied or used facilities without permission from Owner and authorities having jurisdiction.
2. Provide alternate routes around closed or obstructed traffic ways if required by Owner or authorities having jurisdiction.

D. Utility Locator Service: Notify utility locator service "One Call" for area where Project is located before beginning earthwork operations.

E. Do not commence earthwork operations until temporary site fencing and erosion- and sedimentation-control measures specified in Section G6 "Sedimentation and Temporary Erosion Control" and Section G3 "Site Clearing" are in place.

F. Do not commence earthwork operations until plant-protection measures specified in Section 015639 "Temporary Tree and Plant Protection" are in place.

G. The following practices are prohibited within protection zones:

1. Storage of construction materials, debris, or excavated material.
2. Parking vehicles or equipment.
3. Foot traffic.
4. Erection of sheds or structures.
5. Impoundment of water.
6. Excavation or other digging unless otherwise indicated.
7. Attachment of signs to or wrapping materials around trees or plants unless otherwise indicated.

H. Do not direct vehicle or equipment exhaust towards protection zones.

I. Prohibit heat sources, flames, ignition sources, and smoking within or near protection zones.

PART 2 - PRODUCTS

2.1 SOIL MATERIALS

A. Fill materials designated for use in this Section are specified in Section G5 “Granular Fill Materials” and Section 31 05 15 “Soils and Aggregates for Earthwork.”

B. On-Site Fill Material: Earth and rock material obtained at project site during excavation, following clearing and stripping, from which any Unsuitable Soil or Objectionable Material has been removed.

C. General: Provide imported fill materials when sufficient satisfactory soil materials are not available from excavations.

D. Provide fill or bedding material as noted on the Drawings or as referenced in the Contract Documents.

E. Lean concrete fill used for a working mat, seal slab or to replace over excavated material: Cast-in-Place concrete meeting requirement of Section 033000, with the concrete compressive strength equal to a minimum of 3,500 psi.

PART 3 - EXECUTION

3.1 PREPARATION

A. Protect structures, tanks, utilities, sidewalks, pavements, fencing, landscaping, and other facilities from damage caused by settlement, lateral movement, undermining, washout, and other hazards created by earthwork operations.

1. If necessary, remove and restore or replace curbing, driveway aprons, and fencing after performing backfilling work.
2. Replace existing facilities damaged by construction with new material fully equal to existing without additional compensation.

B. Prior to and During Earthwork Operations:
1. Protect and maintain erosion and sedimentation controls; coordinate with Section G6 “Sedimentation and Temporary Erosion Control.”
2. Provide, monitor, and maintain excavation support; coordinate with Section 315000 “Excavation Support and Protection.”

   a. Use excavation support system for excavations within the zone of influence for existing structures or utilities.
   b. Do not permit excavations below base level of adjacent foundations or retaining walls, unless excavation design and bracing includes an analysis of structure’s stability supported by the foundation. When necessary due to project conditions, incorporate required bracing and foundation underpinning.

3. Provide, monitor, and maintain dewatering and drainage systems; coordinate with Section 312319 “Dewatering.”

C. Excavation Subgrade Geophysical Evaluation:

1. Notify the Engineer at least 48 hours in advance of reaching excavation subgrade to allow for observation and Contractor’s geophysical evaluation of the completed excavation subgrade.
2. Upon reaching subgrade elevation, Contractor’s independent geophysical testing firm is to perform geophysical evaluation of the completed excavation to evaluate subsurface conditions for potential void spaces, including those related to karst in the limestone bedrock.
3. Contractor to submit geophysical results and interpretation of potential voids to Engineer as described herein. No backfilling work is to occur prior to approval by the Engineer.

a. A minimum of 10 business days to be assumed for Engineer's review of submitted geophysical results. All review time is to be included in Contractor's schedule.

4. Geophysical evaluation is required at the following structures, at a minimum. Additional locations of geophysical investigation may be added by the Engineer during construction. The minimum geophysical investigation depth is to be 15 feet below the bottom of excavation associated with each respective structure's foundation. The horizontal limits of the investigation area must be the entire structure's footprint plus 5 feet outside of each structure's footprint, unless otherwise approved by the Engineer.

   a. Cedar Breaks Lift Station Wetwell
   b. D B Wood Lift Station Wetwell

D. Test Pits:

1. Perform exploratory excavation work, test pits, for purpose of verifying the location of underground utilities and structures and to check for unknown utilities and structures, prior to commencing excavation work.
2. Backfill and compact test pits as soon as desired information has been obtained. Stabilize backfilled surfaces in accordance with approved erosion and sedimentation control plans.

E. Clearing and Stripping. Initially clear and strip ground surfaces beneath planned structures and in areas requiring excavation or filling of organic material and debris. Do not use those materials as On-Site Fill Material; remove from the site and properly disposed or reuse as topsoil in landscape areas.

F. Protect subgrades and foundation soils from freezing temperatures and frost. Remove temporary protection before placing subsequent materials.

G. Saw cut existing pavement with a saw, wheel, or pneumatic chisel along straight lines before excavating.

3.2 DEWATERING AND DRAINAGE

A. Provide dewatering and drainage in accordance with Section 31 23 19 "Dewatering". This Article supplements those requirements.

B. Prevent surface water and ground water from entering excavations, from ponding on prepared subgrades, and from flooding Project site and surrounding area.

C. Protect subgrades from softening, undermining, washout, and damage by rain or water accumulation.

1. Reroute surface water runoff and groundwater seepage away from excavated areas. Do not allow water to accumulate in excavations. Do not use excavated trenches as temporary drainage ditches.

D. Prior to excavation, verify groundwater will be at required level indicated on approved dewatering and drainage submittal.

E. Accomplish dewatering by methods that preserve undisturbed state of subgrade soils. Dewater in a manner to prevent boiling, detrimental under-seepage, or disturbance at excavation base.

3.3 SUPPORT OF EXCAVATION

A. Provide excavation support as required by federal, state, or local laws, ordinances, regulations, and safety requirements and in accordance with Section 31 50 00 "Excavation Support." This Article supplements those requirements.

B. Install excavation support in accordance with reviewed Shop Drawings prior to beginning excavation work.

C. Construct temporary excavation slopes in accordance with the requirements of OSHA excavation safety standards and approved Shop Drawings.

D. Where allowed, carefully remove excavation supports in a manner without endangering the Work or other adjacent structures, utilities, or property. Immediately fill voids left or caused by withdrawal of supports with sand and compact.

3.4 EXCAVATION

A. Include material of every description and of whatever substance encountered as an unclassified excavation.

B. General: Excavate on-site soils using standard earthmoving equipment. Excavation in dense soil or rock may require special equipment. Do not plough, scrape, or dig earth with machinery so near to finished subgrade to result in excavation of or disturbance of below grade material.

C. Seal slabs or working mats are specifically required in areas indicated on the Drawings. In areas not specifically indicated, seal slabs may be used at the Contractor's option.

D. Make excavations to grades indicated on Drawings and in widths sufficient for laying of pipe, construction of the structure, installing bracing, excavation supports, dewatering and drainage facilities, and working clearances.

E. Perform excavation in-the-dry and accomplished by methods which preserve the natural undisturbed condition of subgrade soils.

F. Moisture Sensitive Soils: Use a smooth-edge bucket to excavate last one foot of depth when excavation is to end in such soils.

G. If excavation bottom is removed below the limits shown on Drawings, specified, or directed by the Engineer, refill with structural fill, lean concrete or other material satisfactory to the Engineer without additional compensation.

H. When excavation has reached prescribed depths, notify the Engineer who will observe the conditions. If materials and conditions are not satisfactory, the Engineer will issue instructions for corrective procedures. The Engineer will be the sole judge as to whether the work has been accomplished satisfactorily.

I. Subgrade soils that have become soft, loose, quick, or otherwise unsatisfactory due to inadequate excavation, dewatering, or other construction methods in the opinion of the Engineer, remove existing soil and replaced with structural fill or other material as acceptable to the Engineer at Contractor's expense.

J. Exposed subgrades for foundations shall be proof rolled with at least two overlapping coverages of a vibratory drum roller with a minimum static drum weight of 20 ton. Conduct proof-rolling in presence of the Engineer or the Engineer's designated representative. The Engineer will waive this requirement, if in its opinion the subgrade will be rendered unsuitable by such proof-rolling.

1. Confined Areas: Proof-roll with hand operated vibratory equipment that is approved by the Engineer.

K. Perform overexcavation at the Engineer's request to remove unsuitable soil, objectionable material, or other materials as determined by the Engineer and to such depth and width as directed. Replace with suitable material as directed by the Engineer.

1. Authorized additional excavation and replacement material will be paid for according to Contract provisions for changes in the Work.

L. Perform excavation for pipelines beneath structures and excavation for footings with excavating equipment operating from the subgrade for the structure, while in-the-dry and in a manner preserving the undisturbed state of subgrade soils.

M. When excavations have reached the required subgrade, including any allowances for working mats or base materials and prior to their placement, notify soils testing laboratory to verify suitability of existing subgrade soils for anticipated foundation and structural loadings.

1. If existing subgrade soils are determined to be unsuitable, follow direction provided by the Engineer regarding removal and replacement with suitable materials.
2. Notify the Engineer if the revised work scope would modify Contractor's cost and thereby entitle a change to the Contract Sum. Authorized additional excavation and replacement material will be paid for according to Contract provisions for changes in the Work.

N. Replace overexcavation beyond the limits and depths required by Contract Documents using structural fill, lean concrete or other material satisfactory to the Engineer without additional compensation.

O. Trenches in Tree- and Plant-Protection Zones:

1. Hand-excavate to indicated lines, cross sections, elevations, and subgrades. Use narrow-tine spading forks to comb soil and expose roots. Do not break, tear, or chop exposed roots. Do not use mechanical equipment that rips, tears, or pulls roots.
2. Do not cut main lateral roots or taproots; cut only smaller roots that interfere with installation of utilities.
3. Cut and protect roots according to requirements in Section 015639 "Temporary Tree and Plant Protection."

3.5 SUBGRADE PREPARATION

A. Notify Engineer or the Engineer's designated representative when excavations have reached required subgrade.

B. Maintain excavated subgrade in-the-dry condition.

C. Prior to fill placement, remove objectionable material which includes, but not be limited to, pavement, topsoil, organic matter, contaminated soil, construction debris, perishable materials, snow, ice, frozen earth, and rocks or lumps of cemented soils over 6 inches in maximum dimension.

D. For subgrades consisting of granular soils, proof roll the final subgrade using at least four coverages of a vibrator plate compactor.

E. If subgrade slopes more than 10 percent, step subgrade to produce a stable, horizontal surface for placement of fill materials. Scarify existing subgrade slope to a depth of at least 6 inches. Adjust the moisture content of the scarified zone to or slightly above optimum, and compact the subgrade as specified.

F. Where existing subgrade contains a significant amount of clay or cohesive soils, over-excavate sufficiently below the bottom of structure for placement of a lean concrete working mat. Remove loose or soft material from the subgrade immediately prior to placing lean concrete working mat (seal slab).

G. Remove and replace soft subgrades or unusable material with structural fill, lean concrete or other material satisfactory to the Engineer.

H. During wet or freezing weather, or in areas where exposed subgrade consists of moisture-sensitive soils, take measures to protect foundation excavations once they have been approved by the Engineer. Protective measures include, but are not limited to, placing insulation blankets, placing a layer of fill, pea gravel, crushed rock, or lean concrete on the exposed subgrade, or covering the exposed subgrade with a plastic tent.

   1. If additional overexcavation is required due to the subgrade not being protected against wet or freezing weather, perform additional work without additional compensation.

I. Notify the Engineer to observe conditions following subgrade preparation and prior to fill placement. If existing subgrade soils are determined to be unsuitable, follow direction provided by the Engineer regarding removal and replacement with suitable materials.

   1. Authorized additional excavation and replacement material will be paid for according to Contract provisions for changes in the Work.

3.6 STORAGE OF SOIL MATERIALS

A. Stockpile borrow soil materials and excavated satisfactory soil materials without intermixing. Place, grade, and shape stockpiles to drain surface water. Cover to prevent windblown dust. Protect from precipitation.

1. Stockpile soil materials away from edge of excavations. Do not store within drip line of remaining trees.

3.7 FILL PLACEMENT AND COMPACTION PROCEDURES

A. Fill and Backfill: Place materials in lifts to suit specified compaction requirements to required lines and grades, making allowances for settlement and placement of cover materials, such as topsoil or sod. Correct soft spots or uncompacted areas.

B. Do not place or compact fill and backfill when materials are too wet to properly compact.

1. In-place Soil Moisture Content: Maximum of three percentage points above optimum moisture content of soil, as determined by laboratory test of moisture-density relation appropriate to specified level of compaction.

C. Structural Fill and Embankment Fill: Construct to required lines and grades, making allowances for settlement and placement of cover materials, such as topsoil and sod. Correct soft spots or uncompacted areas.

D. Fill material shall be free of snow, ice, frost, and frozen earth. Do not place fill materials on frozen surfaces or surfaces covered by snow, ice, or frost.

E. Complete structure water-tightness tests and installation of dampproofing or waterproofing systems prior to placing various types of fill or backfill around structures.

F. Do not backfill against walls or grade beams until the structures bracing them at the top and bottom have been installed and, in the case of cast-in-place concrete, have achieved their 28-day compressive strength as specified in Section 033000 “Cast-in-Place Concrete." Place fill so that its depth is increased uniformly and gradually around the perimeter of any structure.

G. Compact filled slopes by slope rolling and trimming or overfill and trim back to plan grade to expose a firm, smooth surface free of loose material.

H. Do not allow fill lifts to contain stones with a dimension larger than 2/3 the specified loose measure lift thickness.

I. Stones or rock fragments larger than 4-inches in their greatest dimensions will not be permitted within the finished grade of fills and embankments.

J. Perform compaction in open areas using compaction equipment by any of the following methods:

1. Fully loaded ten-wheel trucks or front-end loaders.
2. Tractor dozers weighing minimum of 30,000 pounds.
3. Heavy vibratory rollers.

K. Confined Compaction: Perform compaction in confined areas, including areas within a 45-degree angle extending upward and outward from the base of a wall, and in areas where the use of large equipment is impractical, using hand-operated vibratory equipment or mechanical

tampers. Do not allow heavy roller compaction equipment closer than 6-foot from the wall of any structure.

1. Do not exceed lift thickness of 6 inches, measured before compaction, when using hand operated equipment.

L. Moisture condition on-site fill material prior to placement, unless Contractor demonstrates to the Engineer in-place moisture conditioning methods can achieve the required moisture content.

M. Conduct compaction of each specified lift of fill materials by a minimum of four complete coverages with acceptable compaction equipment to a specified density as a percentage of maximum dry density as determined by ASTM D698, unless otherwise specified. Backfill compaction by means of "puddling" is not allowed.

N. Use select structural fill required beneath foundations or slabs on grade, except sidewalks, unless shown or otherwise specified. Place and compact structural fill in even lifts having a maximum thickness of 8 inches, measured before compaction.

O. Use select fill material placed within 10 feet of all structures, unless shown or otherwise specified. Uniformly place and compact select fill around the structure in even lifts having a maximum thickness of 8 inches, measured before compaction.

P. Use common fill in areas beyond those designated for select structural fill or select fill, unless shown or otherwise specified. Place in even lifts having a maximum thickness of 8 inches, measured before compaction.

Q. Place impervious fill in controlled, even lifts having a maximum thickness (measured before compaction) of 6 inches.

1. Permeability: Compact to attain a reading of less than 1×10^{-7} cm/sec.
2. Moisture Content: Compact to minus 2 percent to plus 3 percent of optimum moisture content.

3.8 COMPACTION REQUIREMENTS

A. Perform in-place testing of compacted fill lifts to measure in-place density and water content according to ASTM D6938, ASTM D698, TEX-113-E.

B. Beneath Foundations and Slabs-on-Grade, except sidewalks: Compact top 12 inches of existing subgrade and each layer of fill, if applicable to:

1. Maximum Dry Density: For fills less than or equal to 5 feet in depth, minimum of 98 percent for ASTM D698. For fills greater than 5 feet in depth, minimum of 100 percent for ASTM D698.
2. Moisture Content: At or near its optimum moisture content, minus 2 percent to plus 3 percent.

C. Area Around Structures (within 10 feet): compact each fill or backfill layer to:

1. Maximum Dry Density: Minimum of 95 percent for ASTM D698.

2. Moisture Content: At or near its optimum moisture content, minus 2 percent to plus 3 percent.

D. Embankments, Lawn, or Unimproved Areas: Does not include embankments under roadways. Compact each fill or backfill layer to:

1. Maximum Dry Density: Minimum of 95 percent for ASTM D698.
2. Moisture Content:

a. For soils with plasticity index less than or equal to 25: At or near its optimum moisture content, minus 3 percent to plus 3 percent.
b. For soils with plasticity index greater than 25: At its optimum moisture content to plus 4 percent.

E. Sidewalks: Compact each fill layer to:

1. Maximum Dry Density: Minimum of 95 percent for ASTM D698.
2. Moisture Content: At or near its optimum moisture content, minus 2 percent to plus 3 percent.

F. Roads, Paved Areas, and Roadway Embankments: Compact each layer of fill or backfill to:

1. Maximum Dry Density: Minimum of 98 percent for TEX-113-E.
2. Moisture Content: At or near its optimum moisture content, minus 2 percent to plus 3 percent.

3.9 DISPOSAL OF UNSUITABLE, WASTE, AND SURPLUS EXCAVATED MATERIALS

A. Unsuitable soil, objectionable material, waste, and surplus excavated material shall be removed and disposed of off-site. Materials may be temporarily stockpiled in an area within the limits of construction that does not disrupt construction activities, create any nuisances or safety hazards, or otherwise restricts access to work site.

B. Topsoil or loam excavated under this Section may be salvaged for use as specified under Section G7 “Loaming, Hydroseeding and Permanent Erosion Control”, as approved by the Engineer.

3.10 GRADING

A. Perform grading to lines and grades shown on Drawings. Remove objectionable materials encountered within the limits indicated and disposed of off-site. Completely and continuously drained and dewatered subgrades throughout the grading process. Install temporary drains and drainage ditches to intercept or divert surface water that may affect the execution or condition of grading work.

B. If it is not possible at the time of grading to place material in its proper section of the Work, stockpile it in approved areas for later use. No additional compensation will be made for stockpiling or double handling of excavated materials.

C. Stones or rock fragments larger than 4-inches in their greatest dimensions will not be permitted within the top 6-inches of the finished grade of fills and embankments.

D. In cut areas, remove loose or protruding rocks in slopes to line or finished grade of the slope. Uniformly dress, cut, and fill slopes to slope cross-section and alignment shown on Drawings, unless otherwise directed by the Engineer.

3.11 RIPRAP AND SLOPE STABILIZATION

A. Prior to installation of riprap, install erosion control blankets on slopes in accordance with manufacturer's instructions.

1. Properly prepare area to be covered before the blanket is applied.
2. When the blanket is unrolled, place netting on top with fibers in contact with the soil over the entire area.
3. Butt blankets snugly at ends and sides, placing blankets a minimum of three rows, each four-foot wide, for a total width of 12 feet.
4. Staple blankets together in accordance with manufacturer's instructions.
5. Secure blankets by driving staple vertically into the ground, spaced approximately 6 feet apart, on each side and one row in the center, alternately spaced between each side.
6. Do not overlap adjoining blankets. Utilize a common row of staples to attach to ground.

B. Place riprap in conjunction with embankment construction with only sufficient lag in construction of riprap protection necessary to allow for proper construction of the portion of embankment protected and to prevent mixture of embankment and riprap material.

1. Place and grade bank run gravel to a depth of 6 inches to obtain a continuous uninterrupted bed of required thickness within the required limits.
2. Compact by a minimum one coverage by a crawler-type tractor with a total weight, including blade and equipment, of not less than 30,000 pounds.

C. Hand-place riprap on compacted gravel bed; do not dump materials. Lay stones so maximum dimension is perpendicular to the bed. Place stones so weight of each stone is carried by underlying material and not by adjacent stones. Place large stones at the bottom of slope. Fill spaces between stones with spalls of suitable size to construct a solid, stable slope, free from large voids and defects, and to protect embankments against erosion.

3.12 FIELD QUALITY CONTROL

A. Test and observe materials as described in this Article. Cooperate by allowing free access to work for selection of test materials and observations.

B. General Testing Requirements:

1. At Structures: Prior to placement of bedding material, concrete work mats, structural fill or structural concrete, coordinate with the Owner’s representative to verify suitability of existing subgrade soil.
2. Backfill and Fill: Prior to and during the placement of backfill and fill coordinate with the Owner’s representative to perform in-place soil density tests to verify that backfill and fill

material has been placed and compacted in accordance with specified compaction requirements.

a. Provide minimum 48 hours' notice prior to placement of backfill and fill.

3. Subgrade: Do not cover with fill without observation, testing, and approval by the Owner's representative.

a. Earthwork activities performed without properly scheduled inspection are subject to removal and replacement or additional testing as directed by the Engineer without additional compensation.

C. Test materials as described in CIP7.

D. If field test results are not in conformance with project requirements, costs involved in correcting deficiencies in compacted materials to satisfaction of the Engineer without additional compensation.

E. Earthwork activities performed without properly scheduled inspection are subject to removal and replacement or additional testing as directed by the Engineer without additional compensation.

F. Testing methods shall comply with latest ASTM or equivalent AASHTO Standards applicable during bidding.

G. During placement of bedding, backfill, and fill, perform in-place soil density testing to confirm that fill material has been compacted in accordance with project requirements. The Engineer or Owner's representative may designate areas to be tested. Notify the Engineer and Owner's representative at least 72 hours in advance of scheduled compaction testing. In place soil density tests on backfill and fill material shall be as required by authorities having jurisdiction, project geotechnical report, but in no instance, shall less than those listed:

1. Structures, Pavements and Embankments: At least one density and moisture content test for each 5,000 square feet of surface area for each lift of fill at embankment, structure, pavement, and manhole locations.
2. Trench Excavations: At least one nuclear density and one moisture content test at a maximum of 100 feet intervals for each lift of fill placed or as directed by the Engineer.
3. The Engineer may designate supplemental areas to be tested at additional compensation.

H. Materials which have been previously tested may be subjected to further testing from time to time and may be rejected, if it is determined that results do not conform to project requirements. Immediately remove rejected materials when directed by the Engineer, notwithstanding results of previous testing.

I. The Engineer or Owner may conduct additional soil testing. Cooperate fully in allowing additional test to be made, including free access to the work.

3.13 PROTECTION

A. Protecting Graded Areas: Protect newly graded areas from traffic, freezing, and erosion. Keep free of trash and debris.

B. Repair and reestablish grades to specified tolerances where completed or partially completed surfaces become eroded, rutted, settled, or where they lose compaction due to subsequent construction operations or weather conditions.

1. Scarify or remove and replace soil material to depth as directed by the Engineer; reshape and recompact.

C. Where settling occurs before Project correction period elapses, remove finished surfacing, backfill with additional soil material, compact, and reconstruct surfacing.

1. Restore appearance, quality, and condition of finished surfacing to match adjacent work, and eliminate evidence of restoration to greatest extent possible.

END OF SECTION 312000

© 2023 CDM Smith
All Rights Reserved

SECTION 312316 - ROCK REMOVAL

PART 1 - GENERAL

1.1 RELATED DOCUMENTS

A. Drawings and general provisions of the Contract, including General and Supplementary Conditions and Division 01 Specification Sections, apply to this Section.

1.2 SUMMARY

A. Section Includes:

1. Excavating, removing, and disposing of identified and discovered rock and boulders during excavation.
2. Tools to assist rock removal.
3. Backfill in place of the excavated rock.

B. Related Requirements:

1. Section 310515 “Soils and Aggregates for Earthwork” soil and aggregate materials.
2. Section 312000 “Earthwork” for excavation, backfilling, and compacting in open areas.
3. Section G4 “Pipe Excavation, Trenching, Embedment, Encasement and Backfilling” for trenching and backfilling for utilities.
4. Section G6 “Sedimentation and Temporary Erosion Control.”
5. Section 315000 “Excavation Support and Protection” temporary support of excavations.

1.3 ACTION SUBMITTALS

A. Submit means and methods description at least two weeks prior to commencing rock and boulder excavation.

1. Identify techniques including size and energy of impact equipment and chemical properties of agents to be used for chemical splitting.
2. Name and qualifications of persons responsible for monitoring and reporting rock excavation vibrations.

B. Review by the Engineer of Contractor’s submittals does not relieve Contractor of responsibility for accuracy, adequacy, and safety of rock and boulder excavation, exercising proper supervision and field judgment, and producing results specified in this Section.

PART 2 - PRODUCTS (NOT USED)

PART 3 - EXECUTION

3.1 PREPARATION

A. Identify required lines, levels, contours, and datum.

3.2 ROCK REMOVAL

A. Perform rock excavation by drilling, wedging, sledging, cutting, barring, jack hammering, hoe ramming, expansive chemical splitting, or other similar process in a manner, which does not cause damage to existing structures, new construction, or affecting Owner operations. No separate payment will be made for rock removal.

   Price and payment for rock removal shall be included in the lift station lump sum bid items (e.g. lift stations, excavation, pipe, manholes, etc.).

B. Controlled blasting is permitted if the Contractor obtains the necessary permits and approvals, in advance, from the City of Georgetown.

C. Perform rock excavation operations to comply with project, state, and local noise and dust regulations.

D. When below grade excavation methods shatter rock and is unfit for subgrade, as determined by the Engineer, Owner's representative or independent testing agency, remove rock and refill excavation with lean concrete without additional compensation.

E. When directed by the Engineer during the work, remove dirt and loose rock from designated areas and thoroughly clean rock surface; use steam to melt snow and ice, if necessary. Remove water in depressions so the whole surface of designated area can be inspected to determine whether seams or other defects exist.

F. Leave surfaces of rock foundations sufficiently rough to bond well with concrete. When required, cut rock to rough benches or steps.

G. Before installing masonry or embankment on or against rock, free rock surfaces from vegetation, dirt, sand, clay, boulders, scale, excessively cracked rock, loose fragments, ice, snow, and other objectionable substances. Use picking, barring, wedging, streams of water under sufficient pressure, stiff brushes, hammers, steam jets, and other effective means to accomplish this cleaning. Remove free water left on rock surface.

3.3 DISPOSAL OF ROCK AND BOULDERS

A. Fragmented rock with dimensions not exceeding 4 inches in any direction may be mixed with common fill and used as common fill in accordance with Section G5 "Granular Fill Materials" and Section 310515 "Soils and Aggregates for Earthwork."

B. Crushed and screened rock and boulders may be for reused in the work, provided resultant materials meet requirements for gravel, crushed stone, or select structural fill as specified in Section G5 "Granular Fill Materials" and Section 310515 "Soils and Aggregates for Earthwork.

C. Stockpile excavated material without excessive surcharge on excavation or obstructing free access to hydrants and gate valves. Avoid inconvenience to traffic and abutters as much as possible.

D. Should conditions make it impracticable or unsafe to stack material adjacent to excavations, haul and store material at provided location. When required, re-handle and use it for trench backfilling without additional compensation.

E. Replace rock and boulder material disposed of by wasting using available surplus suitable soils. Where there is a deficiency of surplus backfill material, provide common fill without additional compensation.

F. Remove and dispose off-site unused rock and boulders.

END OF SECTION 312316

© 2023 CDM Smith
All Rights Reserved

This page intentionally left blank.

© 2023 CDM Smith
All Rights Reserved

SECTION 312323.33 - FLOWABLE FILL

PART 1 - GENERAL

1.1 RELATED DOCUMENTS

A. Drawings and general provisions of the Contract, including General and Supplementary Conditions and Division 01 Specification Sections, apply to this Section.

1.2 SUMMARY

A. Section Includes:

1. Flowable fill for:

   a. Structure backfill.
   b. Utility bedding.
   c. Utility backfill.
   d. Filling abandoned utilities.

B. Related Requirements:

1. Section G9 “Structural Excavation” for general building excavation.
2. Section G5 "Granular Fill Materials" for soil and aggregate backfill.
3. Section G7 "Loaming, Hydroseeding and Permanent Erosion Control" for filling of topsoil over backfilled trenches to finish grade elevation.
4. Section G4 "Pipe Excavation, Trenching, Embedment, Encasement and Backfilling" for piping and bedding.

1.3 DEFINITIONS

A. Utility: Any buried pipe, duct, conduit, manhole, tank, or cable.

B. Excavatable Flowable Fill: Lean cement concrete fill used where future excavation may be required, such as fill for utility trenches, bridge abutments, and culverts.

C. Non-excavatable Flowable Fill: Lean cement concrete fill used where future excavation is not anticipated, such as fill below structure foundations and filling abandoned utilities.

1.4 SUBMITTALS

A. Manufacturer's Certificate: Certify that products meet or exceed specified requirements.

B. Field Quality-Control Submittals:

1. Mix Design:

    a. Furnish flowable fill mix design for each specified strength.
    b. Furnish separate mix designs when admixtures are required for the following:

        1) Flowable fill Work during hot and cold weather.
        2) Air entrained flowable fill Work.

    c. Identify design mix ingredients, proportions, properties, admixtures, and tests.
    d. Sieve analysis of aggregate.

2. Furnish test results to certify flowable fill mix design properties meet or exceed specified requirements.

C. Delivery Tickets:

1. Furnish duplicate delivery tickets indicating actual materials delivered to Project Site.

D. Qualifications Statements:

1. Submit qualifications for supplier.

1.5 QUALITY ASSURANCE

A. Perform Work according to City of Georgetown standards.

B. Maintain a copy of each standard affecting the Work of this Section on Site.

C. All testing and inspection services required, unless otherwise specified, shall be provided and paid by Contractor. Testing necessary to establish the mix shall be performed by and at expense of Contractor. Methods of testing shall comply with the latest applicable ASTM Methods except as specified herein.

1.6 QUALIFICATIONS

A. Supplier:

1. Company specializing in supplying products specified in this Section with minimum three years' experience.
2. Product source approved by authority having jurisdiction.

1.7 ENVIRONMENTAL REQUIREMENTS

A. Store or stockpile fly ash, aggregate, and cement in conformity with the recommendations of ACI 301.

B. Minimum Conditions: Do not install flowable fill during inclement weather or when ambient temperature is less than 40 degrees F.

1.8 FIELD MEASUREMENTS

A. Verify field measurements before installing flowable fill to establish quantities required to complete the Work.

PART 2 - PRODUCTS

2.1 FLOWABLE FILL

A. Furnish materials according to City of Georgetown standards.

B. Flowable Fill: Excavatable type and non-excavatable type.

2.2 MATERIALS

A. Portland Cement: Type II - Moderate;

B. Fine Aggregates:

1. Inert natural sand.

a. Aggregate sizes not greater than 3/8-inch.
b. Satisfactory flowability, strength and setting time when used in comparable flowable fill mixes.
c. Non-expansive or reactive aggregates.

C. Water: Clean and not detrimental to concrete.

2.3 ADMIXTURES

A. Manufacturers:

1. Furnish materials according to City of Georgetown standards.

B. Admixtures manufactured specifically for use in flowable fills will be considered for approval.

1. Free of chlorides and alkalis (except for those attributable to water).
2. Compatible with the mix.
3. Suitable for use in contact with potable water after curing.
4. Admixtures causing retarded or accelerated setting of the mix require written approval from the Engineer.

C. Air Entrainment: ASTM C260.

D. Chemical Admixture: ASTM C494/C494M.

1. Type A: Water Reducing.

E. Fly Ash: ASTM C618 Class C or F obtained from residue of electric generating plant using ground or powdered coal.

F. Plasticizing: ASTM C1017/C1017M Type I, plasticizing.

2.4 MIXES

A. Mix and deliver flowable fill according to ASTM C94/C94M, Option C.

B. Flowable Fill Design Mix:

ITEM	EXCAVATABLE	NON-EXCAVATABLE
Cement Content	75 to 100 lb/cu yd	100 to 150 lb/cu yd
Fly Ash Content	None	150-600 pcf
Water Content	As specified	As specified
Air Entrainment	5 to 35 percent	5 to 15 percent
28-Day Compressive Strength	Maximum 100 psi.	Minimum 125 psi
Unit Mass (Wet)	80 to 110 pcf	100 to 125 pcf
Temperature, Minimum at Point of Delivery	50 degrees F	50 degrees F

C. Provide water content in design mix to produce self-leveling, flowable fill material at time of placement.

D. Design mix air entrainment and unit mass are for laboratory design mix and source quality control only.

2.5 SOURCE QUALITY CONTROL

A. Test and analyze properties of flowable fill design mix and certify results for the following:

1. Design mix proportions by weight of each material.
2. Aggregate: ASTM C33 for material properties and gradation.
3. Properties of plastic flowable fill design mix including:

   a. Temperature.
   b. Slump.
   c. Air entrainment.
   d. Wet unit mass.

e. Yield.
f. Cement factor.

4. Properties of hardened flowable fill design mix including:

a. Compressive strength at 1 day, 7 days, and 28 days. Report compressive strength of each specimen and average specimen compressive strength.
b. Unit mass for each specimen and average specimen unit mass at time of compressive strength testing.

B. Prepare delivery tickets containing the following information:

1. Project designation.
2. Date.
3. Time.
4. Class and quantity of flowable fill.
5. Actual batch proportions.
6. Free moisture content of aggregate.
7. Quantity of water withheld.

PART 3 - EXECUTION

3.1 EXAMINATION

A. Verify excavation and trenching is complete.

B. Verify utility installation is complete and tested before placing flowable fill.

C. Verify excavation is dry.

3.2 PREPARATION

A. Support and restrain utilities to prevent movement and flotation during installation of flowable fill.

B. Protect structures and utilities from damage caused by hydraulic pressure of flowable fill before fill hardens.

C. Protect utilities and foundation drains to prevent intrusion of flowable fill.

3.3 INSTALLATION - FILL, BEDDING, AND BACKFILL

A. Engineer approval required for the condition of subgrade and method of placement.

B. Remove all debris and foreign matter from the excavation before depositing flowable fill.

C. Do not place flowable fill in water or submerge within 24 hours after placing.

D. Do not place flowable fill through flowing water.

E. Place flowable fill by chute, pumping or other methods approved by Engineer.

F. Place flowable fill in lifts to prevent lateral pressures from exceeding structural capacity of structures and utilities.

G. Place flowable fill evenly on both sides of utilities to maintain alignment.

H. Place flowable fill to elevations indicated on Drawings without vibration or other means of compaction.

3.4 INSTALLATION - FILLING ABANDONED UTILITIES

A. Verify pipes and conduits are not clogged and are sufficiently empty to permit gravity installation of flowable fill for entire length indicated to be filled.

B. Seal lower end of pipes and conduits by method to contain flowable fill and to vent trapped air caused by filling operations.

C. Place flowable fill using method to ensure there are no voids.

1. Fill pipes and conduits from high end.
2. Fill manholes, tanks, and other structures from grade level access points.

D. After filling pipes and conduits seal both ends.

3.5 FIELD QUALITY CONTROL

A. Perform inspection and testing according to ASTM C94/C94M.

1. Take samples for tests for every 150 cu yd of flowable fill, or fraction thereof, installed each day.
2. Prepare sample and test four compressive strength test cylinders per ASTM D4832. Test one specimen at 3 days, one at 7 days, and two at 28 days.
3. Measure temperature at point of delivery when samples are prepared.

B. Perform in place penetration (density) tests using handheld penetrometer to measure penetration resistance of hardened flowable fill according to ASTM C403.

1. Perform tests at locations as directed by Engineer**.**

C. Defective Flowable Fill: Fill failing to meet the following test requirements or fill delivered without the following documentation.

1. Test Requirements:

a. Minimum temperature at point of delivery.
b. Compressive strength requirements for each type of fill.

2. Documentation: Duplicate delivery tickets.

3.6 CLEANING

A. Remove spilled and excess flowable fill from Project Site.

B. Restore facilities and Site areas damaged or contaminated by flowable fill installation to existing condition before installation.

END OF SECTION 31 23 23.33

© 2023 CDM Smith
All Rights Reserved

This page intentionally left blank.

© 2023 CDM Smith
All Rights Reserved

SECTION 315000 - EXCAVATION SUPPORT AND PROTECTION

PART 1 - GENERAL

1.1 RELATED DOCUMENTS

A. Drawings and general provisions of the Contract, including General and Supplementary Conditions and Division 01 Specification Sections, apply to this Section.

1.2 SUMMARY

A. Section includes temporary excavation and trench support and protection systems.

B. Related Requirements:

1. City of Georgetown Standard Specifications.
2. Section 312000 "Earthwork" for excavating and backfilling.
3. Section G3 "Site Clearing" for site stripping, grubbing, stripping and stockpiling topsoil, and removal of above- and below-grade improvements and utilities.
4. Section 312316 “Rock Removal” for excavation of rock and boulders.
5. Section 312319 "Dewatering" for lowering and disposing of ground water during construction and dewatering excavations.

1.3 ACTION SUBMITTALS

A. Shop Drawings: For excavation support and protection system, prepared by or under the supervision of a qualified professional engineer, meeting the minimum performance requirements in PART 2 of this Section.

1. Include overall system plan, indicating clearances, dimensions, material properties, member sizes, locations, spacing and member penetrations depths, and locations of various types of lateral supports.
2. Show details, layout, arrangement, equipment requirements, and method of construction of proposed excavation support system.
3. Indicate existing and proposed utilities, structures, or other obstructions.
4. Show wall elevations and locations of bracing.
5. Show overall installation sequence and removal of bracing. Indicate work levels to be performed before bracing is installed or removed.
6. Method of preloading bracing, if required, including preload for each member, and method of locking-off the preload. Submit detailed drawings of connections, jacking supports, and method of shimming.
   Include procedures for resolving difficulties arising from misalignment of members exposed during excavation and criteria for implementing those procedures.

B. Design Calculations: For excavation support and protection system. Include analysis data prepared, signed, and sealed by professional engineer responsible for their preparation.

1. Include loads on excavation support system for all stages of excavation, bracing removal, and concrete placement, including material and equipment loads on adjacent ground during construction.
2. Include design of wall and bracing members including details for all construction stages.
3. Include theoretical deflections of excavation support system and deformation of structures, pipelines, and other improvements located within areas influencing excavations.

C. Submit to the Engineer for review and acceptance, a plan of action to be implemented in the event any deformation threshold value is reached as specified in Section 310900 "Geotechnical Instrumentation and Monitoring." Identify positive measures in action plan to further limit wall movement, including but not limited to trenching for struts and wales, placement of granular earth berms against the wall, installation of additional struts, or combinations thereof.

1. Include description and details of mitigating measures, work schedule, location and availability of materials, and structural details for connections to wall and support elements.
2. Be prepared to work 24 hours per day to implement such measures.
3. Perform remedial work and mitigating measures at no additional cost to Owner.

1.4 INFORMATIONAL SUBMITTALS

A. Submit quality control measures to ensure that performance of excavation support system complies with project requirements.

B. Submit welder qualifications and weld procedures in accordance with AWS D1.1.

C. Qualification Data: For land surveyor.

D. Maintain at least one copy of design at job site during excavation that includes a plan indicating sizes, types, and configurations of the materials to be used in protective system. Identity registered Contractor's design engineer who stamped the design.

E. Do not proceed with excavation support or protection activities until submittals have been reviewed by the Engineer.

1.5 QUALITY ASSURANCE

A. Contractor Qualifications: Minimum 5 years' experience compatible to indicated Work, and who employs labor and supervisory personnel similarly experienced in Work of this Section.

B. Contractor's Design Engineer: Registered Professional Engineer in State where the work is located with at least 5 years' professional experience in design and construction of support of excavation systems and having completed a minimum of 5 successful excavation support projects of equal type, size, and complexity to specified work.

C. Existing Conditions: Using photographs or video recordings, show existing conditions of adjacent construction and site improvements that might be misconstrued as damage caused by inadequate performance of excavation support and protection systems. Submit before Work begins.

D. Regulatory Requirements: Comply with authorities having jurisdiction, including OSHA requirements.

E. Record Drawings: Identify locations and depths of capped utilities, abandoned-in-place support and protection systems, and other subsurface structural, electrical, or mechanical conditions.

1.6 FIELD CONDITIONS

A. Interruption of Existing Utilities: Do not interrupt any utility serving facilities occupied by Owner or others unless permitted under the following conditions and then only after arranging to provide temporary utility according to requirements indicated:

1. Contact utility companies and other responsible authorities to locate and mark underground utilities.
2. Notify Owner no fewer than two days in advance of proposed interruption of utility.
3. Do not proceed with interruption of utility without Owner's written permission.

B. Project-Site Information: Geotechnical data has been collected for this Project and is available for information only. The opinions expressed in this report are those of a geotechnical engineer and represent soil borings and tests, conducted by a geotechnical engineer. Owner is not responsible for interpretations or conclusions drawn from the data.

1. Make additional test borings and conduct other exploratory operations necessary for excavation support and protection according to the performance requirements.
2. Geotechnical data is included elsewhere in Project Manual.

C. Survey Work: Engage a qualified land surveyor or professional engineer to survey adjacent existing buildings, structures, and site improvements; establish exact elevations at fixed points to act as benchmarks. Clearly identify benchmarks and record existing elevations.

PART 2 - PRODUCTS

2.1 PERFORMANCE REQUIREMENTS

A. Provide, design, monitor, and maintain excavation support and protection system capable of supporting excavation sidewalls and of resisting earth and hydrostatic pressures and superimposed and construction loads within specified movement criteria.

1. Contractor Design: Design excavation support and protection system, including comprehensive engineering analysis by a qualified professional engineer.
2. Prevent surface water from entering excavations by grading, dikes, or other means.
3. Install excavation support and protection systems to minimize horizontal and vertical movements without damaging existing buildings, structures, and site improvements adjacent to excavation.

B. Do not permit excavations below the level of the base of adjacent existing foundations or retaining walls, unless excavation design and bracing includes an analysis of stability of structure supported by foundation and if necessary, incorporates required bracing or underpinning of foundation.

C. For support systems in which bracing is installed between opposite sides of the excavation, design excavation support of both sides to be nearly the same as feasible.

D. Where necessary to resist point loads, fill pipe piles used as soldier piles with concrete. Do not consider concrete strength in design of pipe pile for bending stress.

E. Design, install, operate, and maintain ground water control system to control ground water inflows, prevent piping or loss of ground, and maintain stability of the excavation. Refer to the requirements of Section 312319 "Dewatering."

F. Design review and field monitoring activities by Owner or the Engineer does not relieve Contractor of its work responsibilities.

2.2 MATERIALS

A. General: Provide materials that are either new or in serviceable condition.

B. Provide all material and equipment as required to install, monitor, and maintain the excavation support system as designed by the Contractor's Professional Engineer.

PART 3 - EXECUTION

3.1 EXAMINATION

A. Verify that instrumentation required under Section 310900 "Geotechnical Instrumentation and Monitoring" is installed and initialized prior to start of work required by this Section.

B. Proceed with installation only after unsatisfactory conditions have been corrected.

3.2 PREPARATION

A. Obtain permits from local authority having jurisdiction prior to initiating excavation work.

B. Protect structures, utilities, sidewalks, pavements, and other facilities from damage caused by settlement, lateral movement, undermining, washout, and other hazards that could develop during excavation support and protection system operations.

1. Shore, support, and protect utilities encountered.

C. Install excavation support and protection systems to ensure minimum interference with roads, streets, walks, and other adjacent occupied and used facilities.

1. Do not close or obstruct streets, walks, or other adjacent occupied or used facilities without permission from Owner and authorities having jurisdiction. Provide alternate routes around closed or obstructed traffic ways if required by authorities having jurisdiction.
2. Install fencing, gates, lights, and signs around excavations and staging areas to provide for public safety.

D. Locate excavation support and protection systems clear of permanent construction so that construction and finishing of other work is not impeded.

3.3 GENERAL

A. Install excavation support systems in accordance with the shop drawings and applicable permits.

B. Fill voids between excavation support system and earth with materials acceptable to the Engineer.

C. If unstable material is encountered during excavation, take immediately measures to contain it in place and prevent ground displacement.

D. If settlement or deflections of supports indicate that support system requires modification to prevent excessive movements, redesign and resubmit revised shop drawings and calculations to the Engineer without additional compensation.

E. Maintain sufficient quantity of material on site for protection of work and for use in case of accident or emergency.

3.4 PORTABLE TRENCH BOXES

A. Use portable trench boxes or sliding trench shields only for worker protection.

B. Do not use trench boxes as tunnel launch and exit shafts unless specifically approved by Contractor’s Professional Engineer. Additional excavation, backfilling, and surface restoration required as result of trench box use shall be provided without additional compensation.

C. Design, construct, and maintain trench boxes or shields to meet acceptable engineering and industry standards.

D. Install shields in a manner to restrict lateral or other hazardous movement of the shield in the event of sudden lateral loads.

E. Maintain a written copy of trench box manufacturer's specifications, recommendations, and limitations at job site during excavation work.

3.5 SOLDIER PILES AND LAGGING

A. Install steel soldier piles before starting excavation.

1. Install using impact hammer or vibratory hammer in predrilled holes.
2. Soldier Piles in Predrilled Holes:

    1. Provide casing or other methods of support to prevent caving of holes and loss of ground.
    2. Backfill with concrete from elevation of bottom excavation to pile tip elevation. Backfill remainder of predrilled hole with lean concrete or sand.
    3. Predrilled hole of sufficient diameter allowing for proper alignment and concrete backfilling of pile.

3. Install driven piles with driving shoes where hard driving is anticipated.
4. Advance driven soldier piles without aid of a water jet.

B. Extend soldier piles below excavation grade level to depths shown on reviewed Shop Drawings. Space soldier piles at regular intervals not to exceed allowable flexural strength of wood lagging. Accurately align exposed faces of flanges to vary not more than 2 inches from a horizontal line and not more than 1:120 out of vertical alignment.

C. Install wood lagging within flanges of soldier piles as excavation proceeds. Trim excavation as required to install lagging.

1. Install lagging so ground loss does not occur between adjacent or below lowest board. As excavation proceeds, do not maximum height of 4 feet for unlagged face of excavation.
2. Do not exceed unlagged face of 2 feet, if water seeps or flows from excavation face or excavation face becomes unstable.

D. Fill voids behind lagging with soil, and compact.

E. Install wales at locations indicated on Drawings and secure to soldier piles.

3.6 STEEL SHEET PILING

A. Thoroughly cleaned and inspect sheet piles for defects and proper interlock dimensions prior to installation. Provide a tool for checking interlock dimensions.

B. Before starting excavation, drive one-piece sheet piling lengths in plumb position and tightly interlock vertical edges for its entire length to form a continuous barrier. Form a continuous diaphragm throughout length of each run of wall, bearing tightly against original ground.

1. Exercise care in driving so interlocking members can be extracted without damaging adjacent structures or utilities.
2. Use driving, cutting, and splicing methods conforming to approved Shop Drawings.
3. Use templates or other temporary alignment facilities to maintain piling line.

C. Accurately place piling, using templates and guide frames unless otherwise recommended in writing by sheet piling manufacturer. Limit vertical offset of adjacent sheet piling to 5 feet . Accurately align exposed faces of sheet piling to vary not more than 2 inches from a horizontal line and not more than 1:120 out of vertical alignment.

D. Install each sheet pile having sufficient clearance in interlocks to slide under its own weight into interlock of previously placed sheet pile.

E. Do not excavate in advance of steel sheet piling installation.

F. Where obstructions are anticipated, pre-excavate or pre-drill along sheet pile wall alignment without additional compensation. Do not extend pre-excavation and pre-drilling below lowest excavation level or into bearing soils for existing or future structures.

G. Remove obstructions encountered before the specified embedment for piles. Where obstructions cannot be removed, re-evaluate sheet pile system by Contractor's design Professional Engineer to show reduced embedment and additional toe stability measures to be implemented for sheet pile wall realignment. Submit proposed design measures to the Engineer for review.

H. Withdraw damaged or faulty aligned pilings with provide new piling, driven properly in its place without additional compensation.

I. Cut tops of sheet piling to uniform elevation at top of excavation.

3.7 LINER PLATES

A. Install liner plates as soon as excavation has progressed sufficiently to install next complete circumferential ring of liner plates. Complete ring of liner plates prior to continuing excavation.

1. Do not install more than one ring of liner plates at any time.

B. Stagger plates in vertical direction to facilitate shaft strength and leakage resistance.

C. Grout liner plates in accordance with approved Shop Drawings.

3.8 INTERNAL BRACING

A. Bracing: Locate bracing to clear columns, floor framing construction, and other permanent work. If necessary to move brace, install new bracing before removing original brace.

1. Do not place bracing where it will be cast into or included in permanent concrete work, unless otherwise approved by the Engineer.
2. Install internal bracing if required to prevent spreading or distortion of braced frames.
3. Maintain bracing until structural elements are supported by other bracing or until permanent construction is able to withstand lateral earth and hydrostatic pressures.

B. Provide internal bracing to carry maximum design load without distortion or buckling.

C. Include web stiffeners, plates, or angles required to prevent rotation, crippling, or buckling of connections and points of bearing between structural steel members. Allow for eccentricities caused by field fabrication and assembly.

D. Install and maintain bracing support members in tight contact with each other and with the surface being supported.

E. Coordinate excavation work with installation of bracing. Extend excavation no more than 2 feet below any brace level prior to installation of the bracing.

F. Use procedures that produce uniform loading of bracing member without eccentricities, overstressing, or distortion of system members.

3.9 FIELD QUALITY CONTROL

A. Survey-Work Benchmarks: Resurvey benchmarks regularly during installation of excavation support and protection systems, excavation progress, and for as long as excavation remains open. Maintain an accurate log of surveyed elevations and positions for comparison with original elevations and positions. Promptly notify Engineer if changes in elevations or positions occur or if cracks, sags, or other damage is evident in adjacent construction.

B. Promptly correct detected bulges, breakage, or other evidence of movement to ensure that excavation support and protection system remains stable.

C. Promptly repair damages to adjacent facilities caused by installation or faulty performance of excavation support and protection systems.

3.10 REMOVAL

A. Remove excavation support and protection systems when construction has progressed sufficiently to support excavation and earth and hydrostatic pressures. Remove in stages to avoid disturbing underlying soils and rock or damaging structures, pavements, facilities, and utilities.

1. Fill voids immediately with approved backfill compacted to density specified in Section 312000 "Earthwork."
2. Repair or replace, as approved by Engineer, adjacent work damaged or displaced by removing excavation support and protection systems.

B. Do not remove vertical support members that were installed within zone of influence of new or existing structures. Cut off support members installed within this zone at 5 feet below finished grade and abandon in place.

C. Do not remove internal bracing or transfer loads to permanent structure without prior acceptance of the Engineer.

D. Begin removal at excavation bottom and progress upward. Slowly release members noting indication of possible failure of remaining members or possible cave-in of excavation sides.

E. Progress backfilling together with removal of support systems from excavations.

F. Remove all portions of excavation support, unless otherwise indicated by approved Shop Drawings.

1. Zone of Influence Definition: Zone extending down and away from outer edge of the structure at 1 horizontal to 1 vertical.

G. Do not leave wood as part of abandoned portion of the work.

H. When removing excavation support system, do not disturb or damage adjacent buildings, structures, waterproofing material, or utilities. Fill voids immediately with lean concrete or well-graded cohesionless sand or as directed by the Engineer.

I. Immediately remove excavation support system material from site.

END OF SECTION 315000

© 2023 CDM Smith
All Rights Reserved

SECTION 321313 - CONCRETE PAVING

PART 1 - GENERAL

1.1 RELATED DOCUMENTS

A. Drawings and general provisions of the Contract, including General and Supplementary Conditions and Division 01 Specification Sections, apply to this Section.

1.2 SUMMARY

A. Section Includes:

1. Aggregate base course.
2. Concrete paving: Constructing Portland cement concrete pavement, plain or reinforced in accordance with these specifications and with the lines, grades and dimensions shown on the plans. Specifically, the work includes:

    a. Designing the concrete mix.
    b. Preparation of subgrade and subbase material.
    c. Installation of steel reinforcement, dowel bars and tie bars.
    d. Furnishing, transporting, placing, consolidating, finishing, and texturing of concrete.
    e. Furnishing concrete admixtures and additives.
    f. Constructing all joints and furnishing joint materials.
    g. Marking the pavement.
    h. Curing the pavement and furnishing all curing materials.

3. Quality Control of Concrete paving includes:

    a. Furnishing concrete necessary for making test beams and/or cylinders.
    b. Performing maturity testing.
    c. Coring and patching the pavement.
    d. Calibrating and checking the operation of batching equipment.
    e. Taking actions necessary to prevent or to repair cracking.
    f. Sawing and sealing joints.
    g. Verifying dowel bar alignment.
    h. Removing and replacing, or repair of defective pavement.

B. Related Requirements:

1. Section 033000 “Cast-In-Place Concrete” for general building applications of concrete.
2. Section 321373 “Concrete Paving Joint Sealants” for joint sealants in expansion and contraction joints within concrete paving and in joints between concrete paving and asphalt paving or adjacent construction.
3. Section SD5 “Striping” for pavement markings.

1.3 PRE-INSTALLATION MEETINGS

A. Pre-installation Meeting: Conduct meeting at Project site.

1. Review methods and procedures related to concrete paving, including but not limited to, the following:

   a. Concrete mixture design.
   b. Quality control of concrete materials and concrete paving construction practices.

2. Require representatives of each entity directly concerned with concrete paving to attend, including the following:

   a. Contractor's superintendent.
   b. Independent testing agency responsible for concrete design mixtures.
   c. Ready-mix concrete manufacturer.
   d. Concrete paving Subcontractor.
   e. Manufacturer's representative of stamped concrete paving system used for stamped detectable warnings.

1.4 ACTION SUBMITTALS

A. Submit detailed information on materials proposed and installation methods.

B. Product Data: Submit data on material and equipment to be used in concrete pavement including:

1. Sources of aggregate, manufacturer data sheets for cement and concrete admixtures used in the concrete mix design.
2. Dowels and dowel bar assemblies.
3. Reinforcement or welded wire mesh.
4. Equipment to be used for placement, consolidation finishing, texturing, and curing of concrete pavement.
5. Material and equipment to be used for joint installation including joint fillers, joint sealants, and saw-cutting and joint cleaning equipment.

C. Proposed Techniques: submit proposed techniques for placement, consolidation, finishing texturing and curing of concrete, and methods of concrete joint installation.

D. Pavement jointing plan showing joint types based on the proposed methods of installation.

E. Samples for Initial Selection: For each type of product, ingredient, or admixture requiring color selection.

F. Samples for Verification: For each type of product or exposed finish, prepared as Samples of size indicated below:

1. Exposed Aggregate: 10 lb. Sample of each mix.

G. Concrete Mix Design Data:

1. Submit concrete mix design for each concrete strength.
2. Identify mix ingredients and proportions, including admixtures.
3. Identify chloride content of admixtures and whether or not chloride was added during manufacture.

H. Source Quality Control Submittals: Indicate results of factory tests and inspections.

1.5 PRECONSTRUCTION TESTING

A. Construct a test section consisting of minimum three panels in length by one panel width, including or as approved by the Engineer. Include paving, joints, surface texture, exposed aggregate, and specified slope in test section.

B. Locate the test section as directed or approved by the engineer**.** The test section will be part of the actual pavement area.

C. Incorporate accepted test section as part of Work.

1.6 FIELD CONDITIONS

A. Do not place concrete when base surface temperature is less than 40 degrees F, or surface is wet or frozen.

B. Do not begin placement of concrete unless the ambient temperature is at least 35 degrees F and rising.

PART 2 - PRODUCTS

2.1 MATERIALS

A. Concrete Mix Design Requirements: Design concrete mix in accordance with 325.14R-17 (Guide for Design and Proportioning of Concrete Mixtures for Pavements).

B. Form Materials: Plywood, metal, metal-framed plywood, or other approved panel-type materials to provide full-depth, continuous, straight, and smooth exposed surfaces.

1. Use flexible or uniformly curved forms for curves with a radius of 100 feet or less.

C. Form-Release Agent: Commercially formulated form-release agent that will not bond with, stain, or adversely affect concrete surfaces and that will not impair subsequent treatments of concrete surfaces.

D. Steel Reinforcement:

1. Plain-Steel Welded-Wire Reinforcement: ASTM A1064/A1064M, fabricated from as-drawn steel wire into flat sheets.
2. Deformed-Steel Welded-Wire Reinforcement: ASTM A1064/A1064M, flat sheet.
3. Epoxy-Coated Welded-Wire Reinforcement: ASTM A884/A884M, Class A, plain steel.

4. Reinforcing Bars: ASTM A615/A615M, Grade 60; deformed.
5. Galvanized Reinforcing Bars: ASTM A767/A767M, Class II zinc coated, hot-dip galvanized after fabrication and bending; with ASTM A615/A615M, Grade 60 deformed bars.
6. Steel Bar Mats: ASTM A184/A184M; with ASTM A615/A615M, Grade 60 deformed bars; assembled with clips.
7. Plain-Steel Wire: ASTM A1064/A1064M, as drawn.
8. Deformed-Steel Wire: ASTM A1064/A1064M.
9. ..
10. Dowel Bars: ASTM A615/A615M, Grade 60 plain-steel bars. Cut bars true to length with ends square and free of burrs.
11. Tie Bars: ASTM A615/A615M, Grade 60; deformed.
12. Hook Bolts: ASTM A307, Grade A, internally and externally threaded. Design hook-bolt joint assembly to hold coupling against paving form and in position during concreting operations, and to permit removal without damage to concrete or hook bolt.
13. Bar Supports: Bolsters, chairs, spacers, and other devices for spacing, supporting, and fastening reinforcing bars, welded-wire reinforcement, and dowels in place. Manufacture bar supports according to CRSI's "Manual of Standard Practice" from steel wire, plastic, or precast concrete of greater compressive strength than concrete specified, and as follows:
14. Equip wire bar supports with sand plates or horizontal runners where base material will not support chair legs.
15. For epoxy-coated reinforcement, use epoxy-coated or other dielectric-polymer-coated wire bar supports.
16. Epoxy Repair Coating: Liquid, two-part, epoxy repair coating, compatible with epoxy coating on reinforcement.
17. Zinc Repair Material: ASTM A780/A780M.

2.2 CONCRETE MATERIALS

A. Cementitious Materials: Provide cementitious materials consisting of portland cement, blended, cement or only portland cement in combination with supplementary cementitious materials (SCM), that conform to appropriate specifications listed below. Use cementitious materials, of same type, brand, and source throughout Project.

1. Portland Cement: ASTM C150/C150M, gray portland cement Type I.
2. Blended Hydraulic Cement: Provide blended cement conforms to ASTM C595/C595M, Type IP or IS. Type IP blend shall only include ASTM C618 Class F or Class N pozzolan. Include in written statement from the manufacturer that the amount of pozzolan in the finished cement does not vary more than plus or minus 5 mass percent of the finished cement throughout production for the project.
3. Supplementary Cementitious Materials (SCMs):

   a. Fly Ash: ASTM C618, Class F.
   b. Raw or Calcined Natural Pozzolan: ASTM C618, Class N.
   c. Slag Cement: ASTM C989/C989M, Grade 120.

B. Aggregates:

1. Normal-Weight Aggregates: ASTM C33/C33M, Class 4M, uniformly graded. Provide aggregates from a single source.
2. Maximum Coarse-Aggregate Size: 3/4 inch nominal.
3. Fine Aggregate: Free of materials with deleterious reactivity to alkali in cement.

C. Admixtures:

1. Air-Entraining Admixture: ASTM C260/C260M.
2. Chemical Admixtures: Admixtures certified by manufacturer to be compatible with other admixtures and to contain not more than 0.1 percent water-soluble chloride ions by mass of cementitious material.
3. Water-Reducing Admixture: ASTM C494/C494M, Type A.
4. Retarding Admixture: ASTM C494/C494M, Type B.
5. Water-Reducing and Retarding Admixture: ASTM C494/C494M, Type D.
6. High-Range, Water-Reducing Admixture: ASTM C494/C494M, Type F.
7. High-Range, Water-Reducing and Retarding Admixture: ASTM C494/C494M, Type G.
8. Plasticizing and Retarding Admixture: ASTM C1017/C1017M, Type II.

2.3 CURING MATERIALS

A. Water Curing:

1. Absorptive Cover: AASHTO M 182, Class 3, burlap cloth made from jute or kenaf, weighing approximately 9 oz./sq. yd. dry or cotton mats.
2. Moisture-Retaining Cover: ASTM C171, polyethylene film or white burlap-polyethylene sheet.
3. Water: Potable.

B. Evaporation Retarder: Waterborne, monomolecular, film forming, manufactured for application to fresh concrete.

1. Manufacturers: Subject to compliance with requirements, provide products by one of the following or equal:

a. BASF Corporation-Construction Systems.
b. Bon Tool Co.
c. Brickform; a division of Solomon Colors.
d. ChemMasters, Inc.
e. Dayton Superior.
f. Euclid Chemical Company (The); an RPM company.
g. Kaufman Products, Inc.
h. L&M Construction Chemicals, Inc.
i. Lambert Corporation.
j. Metalcrete Industries.
k. Nox-Crete Products Group.
l. Sika Corporation.
m. SpecChem, LLC.
n. TK Products.
o. Vexcon Chemicals Inc.
p. W.R. Meadows, Inc.

C. Joint Fillers: ASTM D1751, asphalt-saturated cellulosic fiber or ASTM D1752, cork or self-expanding cork in preformed strips.

D. Slip-Resistive Aggregate Finish: Factory-graded, packaged, rustproof, non-glazing, abrasive aggregate of fused aluminum-oxide granules or crushed emery aggregate containing not less than 50 percent aluminum oxide and not less than 20 percent ferric oxide; unaffected by freezing, moisture, and cleaning materials.

E. Bonding Agent: ASTM C1059/C1059M, Type II, non-redispersible, acrylic emulsion or styrene butadiene.

F. Epoxy-Bonding Adhesive: ASTM C881/C881M, two-component epoxy resin capable of humid curing and bonding to damp surfaces; of class suitable for application temperature, of grade complying with requirements, and of the following types:

1. Types IV and V, load bearing, for bonding hardened or freshly mixed concrete to hardened concrete.

G. Chemical Surface Retarder: Water-soluble, liquid, set retarder with color dye, for horizontal concrete surface application, capable of temporarily delaying final hardening of concrete to a depth of 1/8 to 1/4 inch.

1. Manufacturers: Subject to compliance with requirements, provide products by one of the following or equal:

a. ChemMasters, Inc.
b. Dayton Superior.
c. Euclid Chemical Company (The); an RPM company.
d. Kaufman Products, Inc.
e. Nox-Crete Products Group.
f. QC Construction Products.
g. Scofield, L. M. Company.
h. Sika Corporation.
i. SpecChem, LLC.
j. TK Products.
k. Vexcon Chemicals Inc.
l. W.R. Meadows, Inc.

2.4 CONCRETE MIXTURES REQUIREMENTS

A. General:

1. Prepare design mixtures, proportioned according to ACI 325.14R-17, for each type and strength of normal-weight concrete, and as determined by either laboratory trial mixtures or field experience.
2. Use a qualified independent testing agency for preparing and reporting proposed concrete design mixtures for the trial batch method.
3. Design the mix to achieve a 28-day compressive strength of 3,500 psi.
4. Design the mix with 0.50 maximum W/C ratio at the point of placement.
5. Maximum slump at the point of placement: 4 inch.

6. Provide a concrete mix with minimum cementitious material (i.e., Portland cement plus supplemental cementitious material) content meeting the requirements of Table 5.4.5.1a of ACI 325.14R-17.

B. Aggregate:

1. Provide coarse and fine aggregate for concrete mix from sources approved by Texas DOT.
2. Provide coarse and fine aggregate consisting of clean, hard, durable particles meeting the requirements of ASTM C33/C33M.
3. Provide coarse aggregate with 1-1/2 inch nominal maximum aggregate size.
4. Coarse and fine aggregate shall consist of particles that are generally spherical or cubical in shape.
5. Coarse aggregates shall be clean and free of deleterious material as follows:

   a. Clay lumps and friable particles (ASTM C142/C142M) < 0.25 percent by mass.
   b. Material finer than 0.075 mm No. 200 sieve (ASTM C117): < 1.0 percent.
   c. Lightweight particles (ASTM C123/C123M): < 1.0 percent.
   d. Total of all deleterious substances, exclusive of material finer than 0.075 mm No. 00 sieve: < 5.0 percent.

6. Fine aggregates shall be clean and free of deleterious material as follows:

   a. Clay lumps and friable particles (ASTM C142/C142M) < 1.0 percent by mass.
   b. Material finer than 0.075 mm No. 200 sieve (ASTM C117): < 3.0 percent.
   c. Lightweight particles ASTM C123/C123M: < 0.5 percent.

7. Aggregate shall not have potential for alkali-silica reactivity (ASR) with cement as determined by ASTM C1778 or AASHTO PP65.
8. Provide coarse aggregate with no more than 40 percent loss when subjected to the Los Angeles abrasion test in accordance with ASTM C131/C131M.
9. Optimize combined coarse and fine aggregate grading in accordance with the guidelines of Section 5.4.10 of ACI 325.14R-17.

C. Portland Cement:

1. Provide ASTM C150/C150M Portland Cement Type I or II.

D. Supplementary Cementitious Materials (SCMs): Supplementary Cementitious Materials used in paving concrete shall conform to the following requirements:

1. Fly Ash: Conform to ASTM C618, Class F.
2. Natural Pozzolan: Raw or calcined conforming to ASTM C618, Class N.
3. Slag Cement: Ground-granulated blast-furnace slag conforming to ASTM C989/C989M, Grade 100 or Grade 120.
4. Limit percentage, by weight, of cementitious materials other than portland cement in concrete as follows:

   a. Fly Ash plus Natural Pozzolan: 35 percent.
   b. Slag Cement: 50 percent.

c. Combined Fly Ash and Slag Cement: 50 percent, with fly ash not exceeding 25 percent.
d. Combined Pozzolan and Slag Cement: 50 percent, with Pozzolan not exceeding 25 percent.

E. Concrete Admixtures:

1. General: Concrete chemical admixtures may include water reducers, retarders, accelerators, air-entrainers. When multiple admixtures in the same mixture, incompatibility issues should be avoided by using admixtures from the same manufacturer.
2. Air Entrainment Admixture (ASTM C260): Add air-entraining admixture to result in normal-weight concrete at point of placement having an air content of 4.5+/-1.5 percent. The amount of air entrainment admixtures to be added shall be determined based on the admixture's manufacturer recommendations and trial mixes.
3. Water-Reducing Admixtures (WRAs): Use water-reducing admixture when required to increase strength and improve workability. Normal WRAs, ASTM C494/C494M Type A and water-reducing and retarding admixtures, Type D. High-range water-reducing admixtures (HRWRAs) shall be of Types F or G.
4. Retarding Admixtures: When used, retarders shall be ASTM C494/C494M Type A or Type D.

2.5 CONCRETE MIXING

A. Ready-Mixed Concrete: Measure, batch, and mix concrete materials and concrete according to ASTM C94/C94M. Furnish batch tickets for each batch discharged and used in the Work.

B. When air temperature is between 85 and 90 degrees F, reduce mixing and delivery time from 1-1/2 hours to 75 minutes; when air temperature is above 90 degrees F, reduce mixing and delivery time to 60 minutes.

C. Project-Site Mixing: Measure, batch, and mix concrete materials and concrete according to ASTM C94/C94M. Mix concrete materials in appropriate drum-type batch machine mixer.

1. For concrete batches of 1 cu. yd. or smaller, continue mixing at least 1-1/2 minutes, but not more than 5 minutes after ingredients are in mixer, before any part of batch is released.
2. For concrete batches larger than 1 cu. yd., increase mixing time by 15 seconds for each additional 1 cu. yd.
3. Provide batch ticket for each batch discharged and used in the Work, indicating Project identification name and number, date, mixture type, mixing time, quantity, and amount of water added.

2.6 SOURCE QUALITY CONTROL

A. Provide mix design for concrete roadway pavement, concrete driveway pavement, and concrete sidewalk.

B. Submit proposed mix design of each class of concrete to appointed firm for review prior to commencement of Work.

C. Tests on cement, aggregates, and mixes will be performed to ensure conformance with specified requirements.

D. Test samples according to ASTM C94/C94M.

PART 3 - EXECUTION

3.1 EXAMINATION

A. Examine exposed subgrades and subbase surfaces for compliance with requirements for dimensional, grading, and elevation tolerances.

B. Proof-roll prepared subbase surface below concrete paving to identify soft pockets and areas of excess yielding.

C. Completely proof-roll subbase in one direction. Limit vehicle speed to 3 mph.

D. Proof-roll with a pneumatic-tired and loaded, 10-wheel, tandem-axle dump truck weighing not less than 15 tons.

E. Correct subbase with soft spots and areas of pumping or rutting exceeding depth of 1/2 inch.

F. Proceed with installation only after unsatisfactory conditions have been corrected.

G. Ensure that sufficient area is prepared and compacted beyond the edge of paving. This area will be used as a wheel track for the paver or as a foundation for the side forms.

3.2 PREPARATION

A. Remove loose material from compacted subbase surface immediately before placing concrete.

B. Keep grade uniformly moist immediately before concrete is placed. Verify that the base is sprinkled sufficiently ahead of the paving train to keep material moist without ponding water.

3.3 INSTALLATION

A. Edge Forms and Screed:

1. Set, brace, and secure edge forms, bulkheads, and intermediate screed guides to required lines, grades, and elevations. Install forms to allow continuous progress of work and so forms can remain in place at least 24 hours after concrete placement.
2. Clean forms after each use and coat with form-release agent to ensure separation from concrete without damage.

B. Steel Reinforcement:

1. General: Comply with CRSI's "Manual of Standard Practice" for fabricating, placing, and supporting reinforcement.
2. Clean reinforcement of loose rust and mill scale, earth, ice, or other bond-reducing materials.
3. Arrange, space, and securely tie bars and bar supports to hold reinforcement in position during concrete placement. Maintain minimum cover to reinforcement.
4. Install welded-wire reinforcement in lengths as long as practicable. Lap adjoining pieces at least one full mesh, and lace splices with wire. Offset laps of adjoining widths to prevent continuous laps in either direction.
5. Zinc-Coated Reinforcement: Use galvanized-steel wire ties to fasten zinc-coated reinforcement. Repair cut and damaged zinc coatings with zinc repair material.
6. Epoxy-Coated Reinforcement: Use epoxy-coated steel wire ties to fasten epoxy-coated reinforcement. Repair cut and damaged epoxy coatings with epoxy repair coating according to ASTM D3963/D3963M.
7. Install fabricated bar mats in lengths as long as practicable. Handle units to keep them flat and free of distortions. Straighten bends, kinks, and other irregularities, or replace units as required before placement. Set mats for a minimum 2 inch overlap of adjacent mats.
8. Install dowel bars and support assemblies at joints as shown on the plans. Lubricate or coat with asphalt one-half of dowel length to prevent concrete bonding to one side of joint. Ensure dowel bars and tie bars are placed in accordance with dimensions and provisions of Contract Plans. Ensure dowels are of correct size and length. Apply lubricant to one half of dowel length but not to the tie bars. Ensure joint locations are properly and accurately marked for the saw crew.

C. Joints:

1. Construct joints that conform to the locations and details in the plans. Joints shall be constructed perpendicular to the finished grade of the pavement. Provide joints that are straight and continuous from edge to edge or end to end of the pavement with no abrupt offset and no gradual deviation greater than 1/2 inch.
2. Change from the jointing pattern shown on Drawings or the approved shop drawings is not allowed without written approval.
3. Seal joints immediately following curing of the concrete or as soon thereafter as weather conditions permit.
4. When Joints intersect each other, it should be at a right angle. Also, joints should form 90-degree angles with free pavement edges. When the alignment of a joint is less than 90 degrees with a free edge, route the last 3 feet of the joint to run perpendicular to the free edge.
5. When joining existing paving, place transverse joints to align with previously placed joints unless otherwise indicated on the plans. When new joints mismatch existing joints, provide steel reinforcement for the first row of panels in the new concrete pavement.
6. Do not continue reinforcement through sides of paving strips unless otherwise indicated.
7. Provide tie bars at sides of paving strips where indicated.
8. Contraction (Control) Joints: The purpose of contraction joints is to relieve early shrinkage stress within the pavement.

    a. Contraction joints must be cut as soon as the concrete has hardened enough to support the saw equipment and allow cutting without excessive chipping, spalling, or tearing of the cut.
    b. Require immediate correction of the operation if excessive raveling occurs during sawing.

c. If a sharp edge joint is being obtained on control cutting, it can generally be regarded that the concrete has hardened excessively, and sawing is being conducted late.

9. Verify that joints are centered over dowels.

   a. Saw the joints at the required spacing consecutively in the sequence of the concrete placement.
   b. Immediately after the joint is sawed, thoroughly flush the saw cut and adjacent concrete surface with water and vacuumed until all waste from sawing is removed from the joint and adjacent concrete surface.
   c. Respray the surface around the joint with curing compound as soon as free water disappears.
   d. Take necessary precautions to ensure that the concrete is properly protected from damage and cured at sawed joints.
   e. Construct contraction joints for a depth equal to at least one-fourth of the concrete thickness, or as shown on the plans. Construct contraction joints by grooving or saw-cutting as follows:

10. Grooved Joints: Form contraction joints after initial floating by grooving and finishing each edge of joint with grooving tool to a 3/8 inch radius. Repeat grooving of contraction joints after applying surface finishes.

    a. Tolerance: Ensure that grooved joints are within 3 inch either way from centers of dowels.

11. Sawed Joints: Form contraction joints with power saws equipped with shatterproof abrasive or diamond-rimmed blades. Cut 1/8-inch- wide joints into concrete when cutting action will not tear, abrade, or otherwise damage surface and before developing random contraction cracks.

    a. Tolerance: Ensure that sawed joints are within 3 inch either way from centers of dowels.

12. Construction Joints: Set construction joints at side forms and at end terminations of paving where paving operations are stopped for more than one-half hour. Provide construction joints at a planned joint location. Install dowels, tie bars in the construction joints, or thicken the edges as indicated.
13. Isolation/ Expansion Joints: Form isolation joints of preformed joint-filler strips abutting concrete curbs, catch basins, manholes, inlets, structures, other fixed objects, and where indicated.

    a. Furnish joint fillers in one-piece lengths. Where more than one length is required, lace or clip joint-filler sections together.
    b. Terminate joint filler not less than 1/2 inch or more than 1 inchbelow finished surface if joint sealant is indicated.
    c. Place top of joint filler flush with finished concrete surface if joint sealant is not indicated.
    d. During concrete placement, protect top edge of joint filler with metal, plastic, or other temporary preformed cap. Remove protective cap after concrete has been placed on both sides of joint.

14. Edging: After initial floating, tool edges of paving, gutters, curbs, and joints in concrete with an edging tool to a 3/8 inch radius. Repeat tooling of edges after applying surface finishes. Eliminate edging-tool marks on concrete surfaces.

D. Concrete Hauling and Placement:

1. Before placing concrete, inspect and complete formwork installation, steel reinforcement, and items to be embedded or cast-in.
2. Remove snow, ice, or frost from subbase surface and steel reinforcement before placing concrete. Do not place concrete on frozen surfaces.
3. Moisten subbase to provide a uniform dampened condition at time concrete is placed. Do not place concrete around manholes or other structures until they are at required finish elevation and alignment.
4. Provide transporting equipment designed and operated to deliver and discharge the required concrete mixture completely without segregation.
5. Comply with ACI 301 requirements for measuring, mixing, transporting, and placing concrete.
6. Do not add water to concrete during delivery or at Project site. Do not add water to fresh concrete after testing is completed.
7. Deposit and spread concrete in a continuous operation inside formed area. Transporting equipment is not to be allowed to operate on the prepared and compacted underlying material. Do not push or drag concrete into place or use vibrators to move concrete into place.
8. Consolidate concrete according to ACI 301 by mechanical vibrating equipment supplemented by hand spading, rodding, or tamping. Insert vibrators into the concrete to a depth that provides the best full-depth consolidation but not closer to the underlying material than 2 inches. Insert hand-operated vibrators between 6 to 15 inches on centers. Excessive vibration is not permitted. Any evidence of inadequate consolidation (honeycomb along the edges, large air pockets, or any other evidence) requires the immediate stopping of the paving operation and approved adjustment of the equipment or procedures.
9. Consolidate concrete along face of forms with an internal vibrator. Keep vibrator away from joint assemblies, reinforcement, or side forms. Use only square-faced shovels for hand spreading and consolidation. Consolidate with care to prevent dislocating reinforcement dowels and joint devices.
10. Screed paving surface with a straightedge and strike off.
11. Initial floating stage between screeding and final float finish is included in this article rather than in "Concrete Protection and Curing" Article.
12. Commence initial floating using bull floats or darbies to impart an open-textured and uniform surface plane before excess moisture or bleedwater appears on the surface. Do not further disturb concrete surfaces before beginning finishing operations or spreading surface treatments.
13. Curbs and Gutters: Use design mixture for automatic machine placement. Produce curbs and gutters to required cross section, lines, grades, finish, and jointing.

E. Slip-Form Paving: Use design mixture for automatic machine placement. Produce paving to required thickness, lines, grades, finish, and jointing.

1. Compact subbase and prepare subgrade of sufficient width to prevent displacement of slip-form paving machine during operations.

F. Detectable Warning Installation:

1. Blockouts: Form blockouts in concrete for installation of detectable paving units.
2. Tolerance for Opening Size: Plus 1/4 inch, no minus.
3. Cast-in-Place Detectable Warning Tiles: Form blockouts in concrete for installation of tiles. Screed surface of concrete where tiles are to be installed to elevation, so that edges of installed tiles will be flush with surrounding concrete paving. Embed tiles in fresh concrete immediately after screeding concrete surface.
4. Stamped Detectable Warnings: Install stamped detectable warnings as part of a continuous concrete paving placement and according to stamp-mat manufacturer's written instructions.

    a. Before using stamp mats, verify that the vent holes are unobstructed.
    b. Apply liquid release agent to the concrete surface and the stamp mat.
    c. Stamping: While initially finished concrete is plastic, accurately align and place stamp mats in sequence. Uniformly load, gently vibrate, and press mats into concrete to produce imprint pattern on concrete surface. Load and tamp mats directly perpendicular to the stamp-mat surface to prevent distortion in shape of domes. Press and tamp until mortar begins to come through all of the vent holes. Gently remove stamp mats.
    d. Trimming: After 24 hours, cut off the tips of mortar formed by the vent holes.

5. Remove residual release agent according to manufacturer's written instructions, but no fewer than three days after stamping concrete. High-pressure-wash surface and joint patterns, taking care not to damage stamped concrete. Control, collect, and legally dispose of runoff.
6. Insert requirements for concrete stain, pigmented sealer, or pigmented curing and sealing compound if pigment is required. Pigmented mineral dry-shake hardener is not used for stamped detectable warnings.

3.4 TOLERANCES

A. Comply with tolerances in ACI 117/ACI 117M and as follows:

B. ACI 117/ACI 117M establishes few paving tolerances; those in subparagraphs below are based on ACI 330.1. Revise to suit Project.

C. Elevation: 3/4 inch.

D. Thickness: Plus 3/8 inch, minus 1/4 inch.

E. Surface: Gap below 10 feet long; unleveled straightedge not to exceed 1/2 inch.

F. Alignment of Tie-Bar End Relative to Line Perpendicular to Paving Edge: 1/2 inch per 12 inches of tie bar.

G. Lateral Alignment and Spacing of Dowels: 1 inch.

H. Vertical Alignment of Dowels: 1/4 inch.

I. Alignment of Dowel-Bar End Relative to Line Perpendicular to Paving Edge: 1/4 inch per 12 inchesof dowel.

J. Joint Spacing: 3 inch.

K. Contraction Joint Depth: Plus 1/4 inch, no minus.

L. Joint Width: Plus 1/8 inch, no minus.

3.5 FINISHING

A. General: Do not add water to concrete surfaces during finishing operations.

B. Float Finish: Begin the second floating operation when bleedwater sheen has disappeared and concrete surface has stiffened sufficiently to permit operations. Float surface with power-driven floats or by hand floating if area is small or inaccessible to power units. Finish surfaces to true planes. Cut down high spots and fill low spots. Refloat surface immediately to uniform granular texture.

1. Burlap Finish: Drag a seamless strip of damp burlap across float-finished concrete, perpendicular to line of traffic, to provide a uniform, gritty texture.
2. Medium-to-Fine-Textured Broom Finish: Draw a soft-bristle broom across float-finished concrete surface, perpendicular to line of traffic, to provide a uniform, fine-line texture.
3. Medium-to-Coarse-Textured Broom Finish: Provide a coarse finish by striating float-finished concrete surface 1/16 to 1/8 inch deep with a stiff-bristled broom, perpendicular to line of traffic.

3.6 SPECIAL FINISHES

A. Monolithic Exposed-Aggregate Finish: Expose coarse aggregate in paving surface as follows:

1. Immediately after float finishing, spray-apply chemical surface retarder to paving according to manufacturer's written instructions.
2. Cover paving surface with plastic sheeting, sealing laps with tape, and remove when ready to continue finishing operations.
3. Without dislodging aggregate, remove mortar concealing the aggregate by lightly brushing surface with a stiff, nylon-bristle broom. Do not expose more than one-third of the average diameter of the aggregate and not more than one-half of the diameter of the smallest aggregate.
4. Fine-spray surface with water and brush. Repeat cycle of water flushing and brushing until cement film is removed from aggregate surfaces to depth required.

B. Seeded Exposed-Aggregate Finish: Immediately after initial floating, spread a single layer of aggregate uniformly on paving surface. Tamp aggregate into plastic concrete and float finish to entirely embed aggregate with mortar cover of 1/16 inch.

1. Spray-apply chemical surface retarder to paving according to manufacturer's written instructions.

2. Cover paving surface with plastic sheeting, sealing laps with tape, and remove sheeting when ready to continue finishing operations.
3. Without dislodging aggregate, remove mortar concealing the aggregate by lightly brushing surface with a stiff, nylon-bristle broom. Do not expose more than one-third of the average diameter of the aggregate and not more than one-half of the diameter of the smallest aggregate.
4. Fine-spray surface with water and brush. Repeat cycle of water flushing and brushing until cement film is removed from aggregate surfaces to depth required.

C. Slip-Resistive Aggregate Finish: Before final floating, spread slip-resistive aggregate finish on paving surface according to manufacturer's written instructions and as follows:

1. Uniformly spread 25 lb./100 sq. ft. of dampened, slip-resistive aggregate over paving surface in two applications. Tamp aggregate flush with surface using a steel trowel, but do not force below surface.
2. Uniformly distribute approximately two-thirds of slip-resistive aggregate over paving surface with mechanical spreader, allow to absorb moisture, and embed by power floating. Follow power floating with a second slip-resistive aggregate application, uniformly distributing remainder of material at right angles to first application to ensure uniform coverage and embed by power floating.
3. Cure concrete with curing compound recommended by slip-resistive aggregate manufacturer. Apply curing compound immediately after final finishing.
4. After curing, lightly work surface with a steel-wire brush or abrasive stone and water to expose nonslip aggregate.

D. Rock-Salt Finish: After initial troweling, uniformly spread rock salt over paving surface at the rate of 5 lb./100 sq. ft..

1. Embed rock salt into plastic concrete with roller or magnesium float.
2. Cover paving surface with 1-mil- thick polyethylene sheet and remove sheet when concrete has hardened and seven-day curing period has elapsed.
3. After seven-day curing period, saturate concrete with water and broom-sweep surface to dissolve remaining rock salt, thereby leaving pits and holes.

E. Pigmented Mineral Dry-Shake Hardener Finish: After initial floating, apply dry-shake materials to paving surface according to manufacturer's written instructions and as follows:

1. Uniformly spread dry-shake hardener at a rate of 100 lb./100 sq. ft. unless greater amount is recommended by manufacturer to match paving color required.
2. Uniformly distribute approximately two-thirds of dry-shake hardener over the concrete surface with mechanical spreader; allow hardener to absorb moisture and embed it by power floating. Follow power floating with a second application of pigmented mineral dry-shake hardener, uniformly distributing remainder of material at right angles to first application to ensure uniform color and embed hardener by final power floating.
3. After final power floating, apply a hand-troweled finish followed by a broom finish.
4. Cure concrete with curing compound recommended by dry-shake hardener manufacturer. Apply curing compound immediately after final finishing.

3.7 FIELD QUALITY CONTROL

A. Testing Agency: Engage a qualified testing agency to perform tests and inspections.

B. Testing Services: Testing and inspecting of composite samples of fresh concrete obtained according to ASTM C172/C172M shall be performed according to the following requirements:

1. Testing Frequency: Obtain at least one composite sample for each 5000 sq. ft. or fraction thereof of each concrete mixture placed each day.

    a. When frequency of testing will provide fewer than five compressive-strength tests for each concrete mixture, testing shall be conducted from at least five randomly selected batches or from each batch if fewer than five are used.

2. Slump: ASTM C143/C143M; one test at point of placement for each composite sample, but not less than one test for each day's pour of each concrete mixture. Perform additional tests when concrete consistency appears to change.
3. Air Content: ASTM C231/C231M, pressure method; one test for each composite sample, but not less than one test for each day's pour of each concrete mixture.
4. Concrete Temperature: ASTM C1064/C1064M; one test hourly when air temperature is 40 deg Fand below and when it is 80 deg Fand above, and one test for each composite sample.
5. Compression Test Specimens: ASTM C31/C31M; cast and laboratory cure one set of three standard cylinder specimens for each composite sample.
6. Compressive-Strength Tests: ASTM C39/C39M; test one specimen at seven days and two specimens at 28 days.
7. A compressive-strength test shall be the average compressive strength from two specimens obtained from same composite sample and tested at 28 days.

C. Strength of each concrete mixture will be satisfactory if average of any three-consecutive compressive-strength tests equals or exceeds specified compressive strength and no compressive-strength test value falls below specified compressive strength by more than 500 psi.

D. Test results shall be reported in writing to Engineer, concrete manufacturer, and Contractor within 48 hours of testing. Reports of compressive-strength tests shall contain Project identification name and number, date of concrete placement, name of concrete testing and inspecting agency, location of concrete batch in Work, design compressive strength at 28 days, concrete mixture proportions and materials, compressive breaking strength, and type of break for both 7- and 28-day tests.

E. Nondestructive Testing: Impact hammer, sonoscope, or other nondestructive device may be permitted by Engineer but will not be used as sole basis for approval or rejection of concrete.

F. Coring: provide concrete cores at least 4 inch in diameter by full depth cut from points selected in the test section by the Engineer. The cores will be evaluated for surface paste, uniformity of aggregate distribution, segregation, voids, and thickness.

G. Additional Tests: Testing and inspecting agency shall make additional tests of concrete when test results indicate that slump, air entrainment, compressive strengths, or other requirements have not been met, as directed by Engineer.

H. Concrete paving will be considered defective if it does not pass tests and inspections.

I. Additional testing and inspecting, at Contractor's expense, will be performed to determine compliance of replaced or additional work with specified requirements.

J. Prepare test and inspection reports.

K. Strength Test Samples:

1. Sampling Procedures: ASTM C172.
2. Cylinder Molding and Curing Procedures: ASTM C31/C31M, cylinder specimens, standard cured.
3. Sample concrete and make one set of three cylinders for every 150 cu yds or less of each class of concrete placed each day and for every 5,000 sf of surface area paving.
4. Make one additional cylinder during cold weather concreting, and field cure.

L. Field Testing:

1. Slump Test Method: ASTM C143/C143M or Tex-415-A.
2. Air Content Test Method: Tex-414-A, Tex-416-A or ASTM C457.
3. Temperature Test Method: ASTM C1064/C1064M or Tex-422-A.
4. Measure slump and temperature for each compressive strength concrete sample.
5. Measure air content in air entrained concrete for each compressive strength concrete sample.

M. Cylinder Compressive Strength Testing:

1. Test Method: ASTM C39/C39M or Tex-418-A.
2. Test Acceptance: according to TxDOT standards.
3. Test one cylinder at 7 days.
4. Test two cylinders at 28 days.
5. Dispose remaining cylinders when testing is not required.

N. Maintain records of placed concrete items. Record date, location of pour, quantity, air temperature, and test samples taken.

3.8 PROTECTION

A. Immediately after placement, protect paving from premature drying, excessive hot or cold temperatures, and mechanical injury.

B. Coordinate minimum requirements for concrete strength with expected traffic conditions.

C. Do not permit pedestrian or vehicular traffic over paving for 7 days minimum after finishing.

D. Remove and replace concrete paving that is broken, damaged, or defective or that does not comply with requirements in this Section. Remove work in complete sections from joint to joint unless otherwise approved by Engineer.

E. Drill test cores, where directed by Engineer, when necessary to determine magnitude of cracks or defective areas. Fill drilled core holes in satisfactory paving areas with portland cement concrete bonded to paving with epoxy adhesive.

F. Protect concrete paving from damage. Exclude traffic from paving for at least 14 days after placement. When construction traffic is permitted, maintain paving as clean as possible by removing surface stains and spillage of materials as they occur.

G. Maintain concrete paving free of stains, discoloration, dirt, and other foreign material. Sweep paving not more than two days before date scheduled for Substantial Completion inspections.

H. Concrete Protection:

1. Protect freshly placed concrete from premature drying and excessive cold or hot temperatures.
2. Comply with ACI 306.1 for cold-weather protection.

I. Evaporation Retarder: Apply evaporation retarder to concrete surfaces if hot, dry, or windy conditions cause moisture loss approaching 0.2 lb/sq. ft. x h before and during finishing operations. Apply according to manufacturer's written instructions after placing, screeding, and bull floating or darbying concrete but before float finishing.

J. Begin curing after finishing concrete but not before free water has disappeared from concrete surface.

K. Curing Methods: Cure concrete by moisture curing, moisture-retaining-cover curing, curing compound, or a combination of these as follows:

1. Moisture Curing: Keep surfaces continuously moist for not less than seven days with the following materials:

   a. Water.
   b. Continuous water-fog spray.
   c. Absorptive cover, water saturated and kept continuously wet. Cover concrete surfaces and edges with 12 inch lap over adjacent absorptive covers.

2. Moisture-Retaining-Cover Curing: Cover concrete surfaces with moisture-retaining cover, placed in widest practicable width, with sides and ends lapped at least 12 inch, and sealed by waterproof tape or adhesive. Immediately repair any holes or tears occurring during installation or curing period, using cover material and waterproof tape.
3. Curing Compound: Apply uniformly in continuous operation by power spray or roller according to manufacturer's written instructions. Recoat areas subjected to heavy rainfall within three hours after initial application. Maintain continuity of coating, and repair damage during curing period.
4. Maintain temperature of air next to concrete above 40 degrees F for the full curing periods.

3.9 SCHEDULE

A. Concrete Sidewalks and Median Barrier: 3,000 psi 28-day concrete, 4 inches thick, gray color Portland cement, exposed aggregate finish.

B. Concrete Area Paving: 3,500 psi 28-day concrete, 6 inches thick, 6/6 - 6 x 6-inch mesh reinforcing, wood float finish.

C. Concrete Roadways and Parking Areas: 3,500 psi 28-day concrete, with thickness and reinforcing as specified on Drawings, wood float finish.

END OF SECTION 321313

© 2023 CDM Smith
All Rights Reserved

This page intentionally left blank.

© 2023 CDM Smith
All Rights Reserved

SECTION 321373 - CONCRETE PAVING JOINT SEALANTS

PART 1 - GENERAL

1.1 RELATED DOCUMENTS

A. Drawings and general provisions of the Contract, including General and Supplementary Conditions and Division 01 Specification Sections, apply to this Section.

1.2 SUMMARY

A. Section Includes:

1. Cold-applied joint sealants.
2. Hot-applied joint sealants.
3. Cold-applied, fuel-resistant joint sealants.
4. Hot-applied, fuel-resistant joint sealants.
5. Joint-sealant backer materials.
6. Primers.

B. Related Requirements:

1. Section 321313 “Concrete Paving” for surface concrete pavement is pedestrian and traffic areas.

1.3 UNIT PRICES

A. Quantity of sealant will be paid based on actual measurement of the number of linear feet of in-place material that has been approved.

1.4 ACTION SUBMITTALS

A. Product Data: submit manufacturer certificate (data sheet) for each type of product and installation recommendations.

B. Copies of test reports.

C. Samples for Verification: For each kind and color of joint sealant required, provide Samples with joint sealants in 1/2-inch wide joints formed between two 6-inch long strips of material matching the appearance of exposed surfaces adjacent to joint sealants.

D. Paving-Joint-Sealant Schedule: Include the following information:

1. Joint-sealant application, joint location, and designation.
2. Joint-sealant manufacturer and product name.
3. Joint-sealant formulation.

4. Joint-sealant color.

1.5 QUALITY ASSURANCE

A. Installer Qualifications: An entity that employs installers and supervisors who are trained and approved by manufacturer.

B. Product Testing: Perform testing of materials in an approved independent laboratory and submit certified copies of test reports for approval 15 days prior to use of materials at the job site.

1.6 FIELD CONDITIONS

A. Do not proceed with installation of joint sealants under the following conditions:

1. When temperature within the joint wall is outside limits permitted by joint-sealant manufacturer or is below 40 degrees F.
2. When moisture is observed within joint.
3. Where joint widths are less than those allowed by joint-sealant manufacturer for applications indicated.
4. Where contaminants capable of interfering with adhesion have not yet been removed from joint substrates.
5. On same day as sawing occurred.

PART 2 - PRODUCTS

2.1 MATERIALS

A. Compatibility: Provide joint sealants, backing materials, and other related materials that are compatible with one another and with joint substrates under conditions of service and application, as demonstrated by joint-sealant manufacturer, based on testing and field experience.

B. Provide joint sealants for various areas of types indicated in Drawings and summarized below.

C. Hot-Applied Joint Sealants:

1. Hot-Applied, Single-Component Joint Sealant: ASTM D6690, Type I or Type II.

D. Cold-Applied Joint Sealants:

1. Single-Component, Nonsag, Silicone Joint Sealant: ASTM D5893/D 5893M, Type NS.
2. Single-Component, Self-Leveling, Silicone Joint Sealant: ASTM D5893/D 5893M, Type SL.
3. Multicomponent, Nonsag, Urethane, Elastomeric Joint Sealant: ASTM C920, Type M, Grade NS, Class 25, for Use T.
4. Single Component, Pourable, Urethane, Elastomeric Joint Sealant: ASTM C920, Type S, Grade P, Class 25, for Use T.

E. Hot-Applied, Fuel-Resistant Joint Sealants:

1. Hot-Applied, Fuel-Resistant, Single-Component Joint Sealants: ASTM D7116, Type I or Type II.

F. Joint-Sealant Backer Materials:

1. Provide backer material that is a compressible, nonshrinking, nonabsorbing material. Use backer material that is 20 to 30 percent larger in diameter than the nominal width of joint. Backer material shall be nonreactive with proposed joint sealant. Material shall have a melting point at least 5 degrees F greater than pouring temperature of sealant being used when tested in accordance with ASTM D789. Material shall also have a water absorption of not more than 5 percent of sample weight when tested in accordance with ASTM C1016.
2. Round Backer Rods for Cold- and Hot-Applied Joint Sealants: ASTM D5249, Type 1, of diameter and density required to control sealant depth and prevent bottom-side adhesion of sealant.
3. Round Backer Rods for Cold-Applied Joint Sealants: ASTM D5249, Type 3, of diameter and density required to control joint-sealant depth and prevent bottom-side adhesion of sealant.
4. Backer Strips for Cold- and Hot-Applied Joint Sealants: ASTM D5249; Type 2; of thickness and width required to control joint-sealant depth, prevent bottom-side adhesion of sealant, and fill remainder of joint opening under sealant.

G. Primers:

1. Primers: Product recommended by joint-sealant manufacturer where required for adhesion of sealant to joint substrates indicated.

PART 3 - EXECUTION

3.1 EXAMINATION

A. Examine joints to receive joint sealants, with Installer present, for compliance with requirements for joint configuration, installation tolerances, and other conditions affecting joint-sealant performance.

B. Proceed with installation only after unsatisfactory conditions have been corrected.

C. Inspect application equipment to ensure conformance to temperature requirements, proper proportioning, and mixing (if two-component sealant) and proper installation. Evidence of bubbling, or improper installation will result in suspending operations until causes of deficiencies are determined and corrected.

3.2 PREPARATION

A. Removal of existing sealant: cut loose in-place sealant from both joint faces and to depth indicated on drawings, using routing equipment, concrete saw, or waterblaster. Prior to further

cleaning operations, remove loose old sealant remaining in joint opening by blowing with compressed air.

B. Surface Cleaning of Joints: Before installing joint sealants, clean out joints immediately to comply with joint-sealant manufacturer's written instructions. Thoroughly clean joints to remove laitance, curing compound, and protrusions of hardened concrete.

1. Remove foreign material from joint substrates that could interfere with adhesion of joint sealant, including dust, old joint sealants, oil, grease, waterproofing, water repellents, water, surface dirt, and frost.

C. Joint Priming: Prime joint substrates where indicated or where recommended in writing by joint-sealant manufacturer, based on preconstruction joint-sealant-substrate tests or prior experience. Apply primer to comply with joint-sealant manufacturer's written instructions. Confine primers to areas of joint-sealant bond; do not allow spillage or migration onto adjoining surfaces.

3.3 INSTALLATION

A. Seal joints immediately following final cleaning of joint walls and following placement of backup material. Open joints, that cannot be sealed under conditions specified, or when rain interrupts sealing operations shall be recleaned and allowed to dry prior to installing sealant.

B. Comply with joint-sealant manufacturer's written installation instructions for products and applications indicated unless installation instructions are modified by Engineer.

C. Joint-Sealant Installation Standard: Comply with recommendations in ASTM C1193 for use of joint sealants as applicable to materials, applications, and conditions.

D. Install joint-sealant backings to support joint sealants during application and at position required to produce cross-sectional shapes and depths of installed sealants relative to joint widths that allow optimum sealant movement capability:

1. Do not leave gaps between ends of joint-sealant backings.
2. Do not stretch, twist, puncture, or tear joint-sealant backings.
3. Remove absorbent joint-sealant backings that have become wet before sealant application and replace them with dry materials.

E. Install joint sealants immediately following backing installation, using proven techniques that comply with the following:

1. Place joint sealants so they fully contact joint substrates.
2. Completely fill joint from the bottom up to 1/4 inch plus or minus 1/16th inch below pavement surface.
3. Produce uniform, cross-sectional shapes and depths relative to joint widths that allow optimum sealant movement capability.
4. Remove and discard excess or spilled sealant from pavement by approved methods.
5. Install sealant in such a manner as to prevent formation of voids and entrapped air.
6. Do not permit traffic over newly sealed pavement until authorized.

F. Tooling of Non-sag Joint Sealants: Immediately after joint-sealant application and before skinning or curing begins, tool sealants according to the following requirements to form smooth, uniform beads of configuration indicated; to eliminate air pockets; and to ensure contact and adhesion of sealant with sides of joint:

1. Remove excess joint sealant from surfaces adjacent to joints.
2. Use tooling agents that are approved in writing by joint-sealant manufacturer and that do not discolor sealants or adjacent surfaces.

3.4 PROTECTION

A. Clean off excess joint sealant as Work progresses, by methods and with cleaning materials approved in writing by joint-sealant manufacturers.

B. Protect joint sealants, during and after curing period, from contact with contaminating substances and from damage resulting from construction operations or other causes so sealants are without deterioration or damage at time of Substantial Completion. If, despite such protection, damage or deterioration occurs, cut out and remove damaged or deteriorated joint sealants immediately and replace with joint sealant so installations in repaired areas are indistinguishable from original work.

END OF SECTION 321373

© 2023 CDM Smith
All Rights Reserved

This page intentionally left blank.

© 2023 CDM Smith
All Rights Reserved

SECTION 323113 – ACCESS GATES AND CHAIN LINK FENCING

PART 1 - GENERAL

1.1 RELATED DOCUMENTS

A. Drawings and general provisions of the Contract, including General and Supplementary Conditions and Division 01 Specification Sections, apply to this Section.

1.2 SUMMARY

A. Section Includes:

1. Chain-link fences.
2. Swing gates.

B. Related Requirements:

1. Section 033000 "Cast-in-Place Concrete" for cast-in-place concrete equipment bases/pads for gate operators and controls and post footings.

1.3 ACTION SUBMITTALS

A. Product Data: For each type of product.

1. Include construction details, material descriptions, dimensions of individual components and profiles, and finishes for the following:

a. Fence and gate posts, rails, and fittings.
b. Chain-link fabric, reinforcements, and attachments.
c. Gates and hardware.

B. Shop Drawings: For each type of fence and gate assembly.

1. Include plans, elevations, sections, details, and attachments to other work.
2. Include accessories, hardware, gate operation, and operational clearances.
3. Gate Operator: Show locations and details for installing operator components, switches, and controls. Indicate motor size, electrical characteristics, drive arrangement, mounting, and grounding provisions.
4. Wiring Diagrams: For power, signal, and control wiring.

C. Samples for Verification: For each type of component with factory-applied finish, prepared on Samples of size indicated below:

1. Polymer-Coated Components: In 6-inch lengths for components and on full-sized units for accessories.

1.4 INFORMATIONAL SUBMITTALS

A. Product Certificates: For each type of chain-link fence, operator, and gate.

B. Product Test Reports: For framework strength according to ASTM F1043, for tests performed by a qualified testing agency.

C. Field quality-control reports.

D. Sample Warranty: For special warranty.

1.5 CLOSEOUT SUBMITTALS

A. Operation and Maintenance Data: For gate operators to include in emergency, operation, and maintenance manuals.

1.6 QUALITY ASSURANCE

A. Testing Agency Qualifications: For testing fence grounding; member company of NETA or an NRTL.

1. Testing Agency's Field Supervisor: Certified by NETA to supervise on-site testing.

B. Emergency Access Requirements: According to requirements of authorities having jurisdiction for gates with automatic gate operators serving as a required means of access.

1.7 FIELD CONDITIONS

A. Field Measurements: Verify layout information for chain-link fences and gates shown on Drawings in relation to property survey and existing structures. Verify dimensions by field measurements.

1.8 WARRANTY

A. Special Warranty: Manufacturer agrees to repair or replace components of chain-link fences and gates that fail in materials or workmanship within specified warranty period.

1. Failures include, but are not limited to, the following:

a. Failure to comply with performance requirements.
b. Deterioration of metals, metal finishes, and other materials beyond normal weathering.
c. Faulty operation of gate operators and controls.

2. Warranty Period: Five years from date of Substantial Completion.

PART 2 - PRODUCTS

2.1 PERFORMANCE REQUIREMENTS

A. Structural Performance: Chain-link fence and gate frameworks shall withstand the design wind loads and stresses for fence height(s) and under exposure conditions indicated according to ASCE/SEI 7.

1. Design Wind Load: As indicated on Drawings.

a. Minimum Post Size: Determine according to ASTM F1043 for post spacing not to exceed 10 feet for Material Group IA, ASTM F1043, Schedule 40 steel pipe.
b. Minimum Post Size and Maximum Spacing: Determine according to CLFMI WLG 2445, based on mesh size and pattern specified.

B. Lightning Protection System: Maximum resistance-to-ground value of 25 ohms at each grounding location along fence under normal dry conditions.

2.2 CHAIN-LINK FENCE FABRIC

A. General: Provide fabric in one-piece heights measured between top and bottom of outer edge of selvage knuckle or twist according to "CLFMI Product Manual" and requirements indicated below:

1. Fabric Height: 8-feet.
2. Steel Wire for Fabric: 9 GA Galvanized Steel with 7 GA Galvanized bottom tension wire.

a. Mesh Size: 2 inches.
b. Chain link fabric shall conform to Federal Specification RR-F-191/1D.
c. Fabric shall be fastened to intermediate posts with No. 6 aluminum fabric wire spaced approximately 15-inches apart and to top rail with 9 gauge wires spaced approximately 18-inches apart. Fabric shall be securely fastened to all terminal and gate posts with 3/4-inch by 1/10-inch stretcher bars with No. 11 gauge pressed steel bands spaced approximately 12-inches apart.
d. Galvanized steel Fabric: ASTM A 392, Type I, with hot dipped galvanized coating applied after weaving.
e. Polymer-Coated Fabric: ASTM F668, over zinc-coated steel wire.

1) Color: As selected by Engineer from manufacturer's full range, according to ASTM F934.

f. Coat selvage ends of metallic-coated fabric before the weaving process with manufacturer's standard clear protective coating.

3. Selvage: Twisted top and knuckled bottom.

2.3 FENCE FRAMEWORK

A. Posts and Rails: ASTM F1043 for framework, including rails, braces, and line; terminal; and corner posts. Provide members with minimum dimensions and wall thickness according to ASTM F1043 based on the following:

1. Fence Height: 96 inches.
2. Heavy-Industrial-Strength Material: Group IA, round steel pipe, Schedule 40.

    a. Line Post: 2.375 inches in diameter.
    b. End, Corner, and Pull Posts: 2.875 inches in diameter.

3. Horizontal Framework Members: Intermediate, top and bottom rails according to ASTM F1043.

    a. 1.66 inches in diameter.

4. Brace Rails: 1.66 inches in diameter according to ASTM F1043.
5. Polymer coating over metallic coating.

    a. Color: As selected by Engineer from manufacturer's full range, according to ASTM F934.

2.4 TENSION WIRE

A. Polymer-Coated Steel Wire: 7 gauge galvanized steel, tension wire according to ASTM F1664.

1. Color: Match chain-link fabric, according to ASTM F934.

2.5 SWING GATES

A. General: ASTM F900 for gate posts and single swing gate types.

1. Gate Leaf Width: As indicated.
2. Framework Member Sizes and Strength: Based on gate fabric height of more than 96 inches.

B. Pipe and Tubing:

1. Zinc-Coated Steel: ASTM F1043 and ASTM F1083; protective coating and finish: Polymer coating over metallic coating.
2. Aluminum: ASTM B429/B429M; manufacturer's standard finish.
3. Gate Posts: Round tubular steel.
4. Gate Frames and Bracing: Round tubular steel.

C. Frame Corner Construction: assembled with corner fittings.

D. Hardware:

1. Hinges: 180-degree outward swing.
2. Latch: Permitting operation from both sides of gate with provision for padlocking accessible from both sides of gate.
3. Lock: Manufacturer's standard internal device.
4. Closer: Manufacturer's standard.

2.6 FITTINGS

A. Provide fittings according to ASTM F626.

B. Post Caps: Provide for each post.

1. Provide line post caps with loop to receive tension wire or top rail.

C. Rail and Brace Ends: For each gate, corner, pull, and end post.

D. Rail Fittings: Provide the following:

1. Top Rail Sleeves: round-steel tubing not less than 6 inches long.
2. Rail Clamps: Line and corner boulevard clamps for connecting intermediate and bottom rails to posts.

E. Tension and Brace Bands: Pressed steel.

F. Tension Bars: Steel, length not less than 2 inches shorter than full height of chain-link fabric. Provide one bar for each gate and end post, and two for each corner and pull post, unless fabric is integrally woven into post.

G. Truss Rod Assemblies: Steel, hot-dip galvanized after threading rod and turnbuckle or other means of adjustment.

H. Tie Wires, Clips, and Fasteners: According to ASTM F626.

1. Standard Round Wire Ties: For attaching chain-link fabric to posts, rails, and frames, according to the following:

a. Hot-Dip Galvanized Steel: 0.106-inch- diameter wire; galvanized coating thickness matching coating thickness of chain-link fence fabric.
b. Aluminum: ASTM B211; Alloy 1350-H19; 0.148-inch- diameter, mill-finished wire.

I. Finish:

1. Metallic Coating for Pressed Steel or Cast Iron: Not less than 1.2 oz./sq. ft. of zinc.

a. Polymer coating over metallic coating.

2. Aluminum: Mill finish.

2.7 GATE SYSTEM OPERATORS

A. Gate Operator: Manual operation.

PART 3 - EXECUTION

3.1 EXAMINATION

A. Examine areas and conditions, with Installer present, for compliance with requirements for site clearing, earthwork, pavement work, and other conditions affecting performance of the Work.

1. Do not begin installation before final grading is completed unless otherwise permitted by Engineer.

B. Proceed with installation only after unsatisfactory conditions have been corrected.

3.2 PREPARATION

A. Stake locations of fence lines, gates, and terminal posts. Do not exceed intervals of 500 feet or line of sight between stakes. Indicate locations of utilities, lawn sprinkler system, underground structures, benchmarks, and property monuments.

3.3 CHAIN-LINK FENCE INSTALLATION

A. Install chain-link fencing according to ASTM F567 and more stringent requirements specified.

1. Install fencing on established boundary lines inside property line.

B. Post Excavation: Drill or hand-excavate holes for posts to diameters and spacings indicated, in firm, undisturbed soil.

C. Post Setting: Set posts at indicated spacing into firm, undisturbed soil.

1. Verify that posts are set plumb, aligned, and at correct height and spacing, and hold in position during setting with concrete or mechanical devices.
2. Concrete Fill: Place concrete around posts to dimensions indicated and vibrate or tamp for consolidation. Protect aboveground portion of posts from concrete splatter.

D. New posts for all fences shall be anchored directly into new concrete footings as shown on the Drawings.

E. Terminal Posts: Install terminal end, corner, and gate posts according to ASTM F567 and terminal pull posts at changes in horizontal or vertical alignment of 30 degrees or more. For runs exceeding 500 feet, space pull posts an equal distance between corner or end posts.

F. Line Posts: Space line posts uniformly at 10 feet.

G. Post Bracing and Intermediate Rails: Install according to ASTM F567, maintaining plumb position and alignment of fence posts. Diagonally brace terminal posts to adjacent line posts with truss rods and turnbuckles. Install braces at end and gate posts and at both sides of corner and pull posts.

1. Locate horizontal braces at mid height of fabric 72 inches or higher, on fences with top rail, and at two-third fabric height on fences without top rail. Install so posts are plumb when diagonal rod is under proper tension.

H. Tension Wire: Install according to ASTM F567, maintaining plumb position and alignment of fence posts. Pull wire taut, without sags. Fasten fabric to tension wire with 0.120-inch- diameter hog rings of same material and finish as fabric wire, spaced a maximum of 24 inches o.c. Install tension wire in locations indicated before stretching fabric. Provide horizontal tension wire at the following locations:

1. Extended along top and bottom of fence fabric. Install top tension wire through post cap loops. Install bottom tension wire within 6 inches of bottom of fabric and tie to each post with not less than same diameter and type of wire.

I. Top Rail: Install according to ASTM F567, maintaining plumb position and alignment of fence posts. Run rail continuously through line post caps, bending to radius for curved runs and terminating into rail end attached to posts or post caps fabricated to receive rail at terminal posts. Provide expansion couplings as recommended in writing by fencing manufacturer.

J. Intermediate and Bottom Rails: Secure to posts with fittings.

K. Chain-Link Fabric: Apply fabric to outside of enclosing framework. Leave 2-inch bottom clearance between finish grade or surface and bottom selvage unless otherwise indicated. Pull fabric taut and tie to posts, rails, and tension wires. Anchor to framework so fabric remains under tension after pulling force is released.

L. Tension or Stretcher Bars: Thread through fabric and secure to end, corner, pull, and gate posts, with tension bands spaced not more than 12 inches o.c.

M. Tie Wires: Use wire of proper length to firmly secure fabric to line posts and rails. Attach wire at one end to chain-link fabric, wrap wire around post a minimum of 180 degrees, and attach other end to chain-link fabric according to ASTM F626. Bend ends of wire to minimize hazard to individuals and clothing.

1. Maximum Spacing: Tie fabric to line posts at 12 inches o.c. and to braces at 24 inches o.c.

N. Fasteners: Install nuts for tension bands and carriage bolts on the side of fence opposite the fabric side.

3.4 GATE INSTALLATION

A. Cast concrete footings in accordance with Section 03 30 00 “Cast-in-Place Concrete” as detailed on Drawings and approved shop drawings.

1. Minimum footing diameter:

    a. Terminal and gate posts: 12 inches.
    b. Intermediate line posts: 10 inches.

B. Gate to be installed per manufacturers gate installation instructions. Gate shall be installed in compliance with ASTM F2200 standards.

C. Gate posts shall be spaced according to the manufacturers' drawings, dependent on clear opening. The manufacturers' gate drawings shall identify the necessary gate hardware required for the application. Gate hardware shall be provided by the manufacture of the gate and shall be installed per manufacturer's recommendations.

3.5 GATE INSTALLATION MAINTENANCE

A. When cutting/drilling posts adhere to the following steps to seal the exposed steel surfaces:

1. Remove metal shavings from cut area.
2. Apply zinc-rich primer to thoroughly cover cut edge and/or drilled hole; let dry.
3. Apply 2 coats of custom finish paint matching fence color. Failure to seal exposed surfaces per steps 1-3 above will negate warranty. Ameristar spray cans or paint pens shall be used to prime and finish exposed surfaces; it is recommended that paint pens be used to prevent overspray. Use of non-Ameristar parts or components will negate the manufactures' warranty.

3.6 GROUNDING AND BONDING

A. Comply with requirements in Section 260526 "Grounding and Bonding for Electrical Systems."

B. Fence and Gate Grounding:

1. Ground for fence and fence posts shall be a separate system from ground for gate and gate posts.
2. Install ground rods and connections at maximum intervals of 1,500 feet.
3. Fences within 100 Feet of Buildings, Structures, Walkways, and Roadways: Ground at maximum intervals of 750 feet.
4. Ground fence on each side of gates and other fence openings.

    a. Bond metal gates to gate posts.
    b. Bond across openings, with and without gates, except openings indicated as intentional fence discontinuities. Use No. 2 AWG wire and bury it at least 18 inches below finished grade.

C. Protection at Crossings of Overhead Electrical Power Lines: Ground fence at location of crossing and at a ground rod located a maximum distance of 150 feet on each side of crossing.

D. Fences Enclosing Electrical Power Distribution Equipment: Ground according to IEEE C2 unless otherwise indicated.

E. Grounding Method: At each grounding location, drive a grounding rod vertically until the top is 6 inches below finished grade. Connect rod to fence with No. 6 AWG conductor. Connect conductor to each fence component at grounding location.

F. Connections:

1. Make connections with clean, bare metal at points of contact.
2. Make aluminum-to-steel connections with stainless-steel separators and mechanical clamps.
3. Make aluminum-to-galvanized-steel connections with tin-plated copper jumpers and mechanical clamps.
4. Make above-grade ground connections with mechanical fasteners.
5. Make below-grade ground connections with exothermic welds.
6. Coat and seal connections having dissimilar metals with inert material to prevent future penetration of moisture to contact surfaces.

G. Bonding to Lightning Protection System: Ground fence and bond fence grounding conductor to lightning protection down conductor or lightning protection grounding conductor according to NFPA 780.

H. Comply with requirements in Section 264113 "Lightning Protection for Structures."

3.7 FIELD QUALITY CONTROL

A. Testing Agency: Engage a qualified testing agency to perform tests.

B. Prepare test reports.

3.8 ADJUSTING

A. Gates: Adjust gates to operate smoothly, easily, and quietly, free of binding, warp, excessive deflection, distortion, nonalignment, misplacement, disruption, or malfunction, throughout entire operational range. Confirm that latches and locks engage accurately and securely without forcing or binding.

B. Lubricate hardware and other moving parts.

3.9 DEMONSTRATION

A. Engage a factory-authorized service representative to train Owner's maintenance personnel to adjust, operate, and maintain chain-link fences and gates.

Table 1 – Coating Performance Requirements		
Quality Characteristics	ASTM Test Method	Performance Requirements
Adhesion	D3359 – Method B	Adhesion (Retention of Coating) over 90% of test area (Tape and knife test).
Corrosion Resistance	B117, D714 & D1654	Corrosion Resistance over 1,000 hours (Scribed per D1654; failure mode is accumulation of 1/8" coating loss from scribe or medium #8 blisters).
Impact Resistance	D2794	Impact Resistance over 60 inch lb. (Forward impact using 0.625" ball).
Weathering Resistance	D822 D2244, D523 (60˚ Method)	Weathering Resistance over 1,000 hours (Failure mode is 60% loss of gloss or color variance of more than 3 delta-E color units).

END OF SECTION 323113

© 2023 CDM Smith
All Rights Reserved

SECTION 330509.33 - THRUST RESTRAINT FOR UTILITY PIPING

PART 1 - GENERAL

1.1 RELATED DOCUMENTS:

A. Drawings and general provisions of the Contract, including General and Supplementary Conditions and Division 01 Specification Sections, apply to this Section.

1.2 SUMMARY

A. Section Includes: Tied joint restraint system.

B. Related Requirements:

1. Section 312333 “Trenching and Backfilling” for trenching and backfilling requirements for Site utilities.

1.3 UNIT PRICE - MEASUREMENT AND PAYMENT

A. Tied Joint Restraint System:

1. Basis of Measurement: By unit.
2. Basis of Payment: Includes tied joint restraint system and accessories.

1.4 COORDINATION

A. Coordinate Work of this Section with installation of fittings and joints that require restraint.

1.5 PREINSTALLATION MEETINGS

A. Convene minimum one week prior to commencing Work of this Section.

1.6 ACTION SUBMITTALS

A. Product Data: Submit manufacturer catalog information for restrained joint details and installation instructions.

B. Shop Drawings:

1. Restrained joint details and materials being used.
2. Layout drawings showing piece numbers and locations.
3. Restrained joint locations.

1.7 DELEGATED DESIGN SUBMITTALS

A. Signed and sealed Shop Drawings with design calculations and assumptions for restrained lengths.

B. Joint Restraint Details: Joint restraint devices specifically designed for applications described in manufacturer information.

1.8 INFORMATIONAL SUBMITTALS

A. Manufacturer's Certificate: Certify that products meet or exceed specified requirements.

B. Manufacturer Instructions: Detailed instructions on installation requirements, including storage and handling procedures.

C. Qualifications Statement: Qualifications for manufacturer, fabricator, and licensed professional.

1.9 CLOSEOUT SUBMITTALS

A. Project Record Documents: Record actual locations of joint restraints.

1.10 QUALITY ASSURANCE

A. Perform Work according to AWWA standards.

A. Maintain a copy of each standard affecting Work of this Section on Site.

1.11 QUALIFICATIONS

A. Manufacturer: Company specializing in manufacturing products specified in this Section with minimum three years' documented experience.

B. Fabricator: Company specializing in fabricating products specified in this Section with minimum three years' documented experience and approved by manufacturer.

C. Licensed Professional: Professional engineer experienced in design of specified Work and licensed in State of Texas.

1.12 DELIVERY, STORAGE, AND HANDLING

A. Inspection: Accept materials on Site in manufacturer's original packaging and inspect for damage.

B. Store materials according to manufacturer instructions.

C. Protection:

1. Protect materials from moisture and dust by storing in clean, dry location remote from construction operations areas.

2. Provide additional protection according to manufacturer instructions.

1.13 FIELD CONDITIONS

A. Field Measurements:

1. Verify field measurements prior to fabrication.
2. Indicate field measurements on Shop Drawings.

PART 2 - PRODUCTS

2.1 PERFORMANCE AND DESIGN CRITERIA

A. Provide pressure pipeline with restrained joints at each bend, tee, line valve and change in direction.

2.2 TIED JOINT RESTRAINT SYSTEMS

A. Manufacturers:

1. Furnish materials according to State of Texas Department of Transportation standards.

B. Tie Bolts:

1. Mechanical Joints on 14 to 24 inch Pipe:

a. Size: 3/4 inch.
b. Comply with ASTM A588/A588M, Grade B and ASTM A325, Type 3.

2. Mechanical and Flanged Joints on 30 inch and Larger Pipe:

a. Size: 1 inch.
b. Comply with ASTM A588/A588M, Grade B.
c. Comply with ASTM A325, Type 3, except increase tensile strength of full-body threaded section to 100,000 lb minimum by heat-treating (quenching and tempering) to manufacturer's reheat and hardness specifications.

C. Tie Nut:

1. Description: Hex nut for each tie bolt and tie rods.
2. Comply with ASTM A563, Grade C3.
3. Finish: Zinc plated or galvanized.

D. Tiepin:

1. Bends and Hydrants: 3/4 inch round bar stock.
2. Size and Shape: 6 inch hairpin.
3. Comply with ASME B1.1 and ASTM A588/A588M.
4. Finish: Zinc plated or galvanized.

E. Tie Coupling:

1. Description: Extension of continuous-threaded rods.
2. Provide with center stop to aid installation.
3. Comply with ASTM A588/A588M.
4. Finish: Zinc plated or galvanized.

F. Tie Clamp:

1. Description: Retainer clamp for ductile iron, asbestos-cement, and PVC push-on pipe.
2. Location: In front of bell.
3. Comply with ASTM A36/A36M, ASTM A307, Grade A, and ASTM A563, Grade A.
4. Finish: Zinc plated or galvanized.

G. Tie Rod:

1. Description: Continuous-threaded rod for cutting to desired lengths.
2. Comply with ASTM A588/A588M, Grade B, ASTM A325, Type 3, and ASME B1.1.
3. Finish: Zinc plated or galvanized.

H. Tie Bar:

1. Description: Steel bar used to restrain push-in plugs.
2. Comply with ASTM A36/A36M.
3. Finish: Zinc plated or galvanized.

I. Tie Washer:

1. Description: Round flat washers.
2. ASTM A588/A588M, ASTM F436, Type 1.
3. Finish: Zinc plated or galvanized.

2.3 MATERIALS

A. Steel:

1. High-Strength Low-Alloy Steel: Comply with ASTM A588/A588M, heat treated.
2. Carbon Steel: Comply with ASTM A36/A36M.

2.4 FINISHES

A. Zinc Plating: Factory applied. Comply with ASTM B633.

B. Galvanizing: Factory applied. Comply with ASTM A153/A153M.

© 2023 CDM Smith
All Rights Reserved

PART 3 - EXECUTION

3.1 EXAMINATION

A. Verify that pipe and fittings are ready to receive Work.

B. Field measure and verify conditions for installation of Work.

3.2 PREPARATION

A. Clean surfaces of pipe and fittings that are to receive tied joint restraint systems.

3.3 INSTALLATION

A. Install joint restraint system according to AWWA C600 such that joints are mechanically locked together to prevent joint separation and State of Texas Department of Transportation standards.

3.4 TOLERANCES

A. Torque 5/8 inch nuts on mating threaded fasteners as recommended by joint restraint manufacturer.

B. Torque 3/4 inch nuts on mating threaded fasteners as recommended by joint restraint manufacturer.

C. Torque 1 inch nuts on mating threaded fasteners as recommended by joint restraint manufacturer.

END OF SECTION 330509.33

© 2023 CDM Smith
All Rights Reserved

This page intentionally left blank.

© 2023 CDM Smith
All Rights Reserved

SECTION 330526 - UTILITY IDENTIFICATION

PART 1 - GENERAL

1.1 RELATED DOCUMENTS

A. Drawings and general provisions of the Contract, including General and Supplementary Conditions and Division 01 Specification Sections, apply to this Section.

1.2 SUMMARY

A. Section Includes:

1. Pipeline marker posts.
2. Plastic ribbon tape for placement above direct-buried utility.
3. Trace wire for placement above direct-buried utility.

B. Related Requirements:

1. Section 312333 “Trenching and Backfilling.”
2. Section 312000 “Earthwork.”

1.3 ACTION SUBMITTALS

A. Product Data: Submit manufacturer's catalog information for each product required.

1.4 INFORMATIONAL SUBMITTALS

A. Manufacturer's Certificate: Certify that products meet or exceed specified requirements.

B. Qualifications Statement:

1. Submit qualifications for manufacturer.

1.5 CLOSEOUT SUBMITTALS

A. Project Record Documents: Record actual locations of tagged valves.

1.6 QUALITY ASSURANCE

A. Conform to APWA Uniform Color Code, ANSI Z535.1, and ASME A13.1 for color scheme for identification of piping systems and accessories.

1.7 QUALIFICATIONS

A. Manufacturer: Company specializing in manufacturing products specified in this Section with minimum three years' documented experience.

PART 2 - PRODUCTS

2.1 PIPELINE MARKER POSTS

A. Manufacturers:

1. Berntsen International Inc. of Madison, Wisconsin.
2. William Frick & Company, of Libertyville, Illinois.

B. Description:

1. Material: High-density polypropylene.
2. Diameter: 3-1/2 inches.
3. Length: 72 inches.
4. Color: as requested by Owner.
5. Embedment: T-anchor.

2.2 RIBBON TAPE

A. Manufacturers:

1. Berntsen International Inc.
2. Pipemarker.com; Brimar Industries, Inc.

B. Description:

1. Material: Polyethylene.
2. Brightly colored, continuously printed.
3. Minimum Size: 3 inches wide by 4 mils thick.
4. Manufactured for direct burial service.
5. Imprint: “Caution Buried Waterline” in large letters.

2.3 TRACE WIRE

A. Manufacturers:

1. Northtown Company.
2. Priority Wire and Cable, Inc.
3. Tracerwire.
4. Description:

a. Conductor: Magnetically detectable.
b. Covering: Brightly colored plastic, imprinted with ”Waterline” in large letters.

PART 3 - EXECUTION

3.1 INSTALLATION

A. Pipeline Marker Posts, Utility Markers, and Marking Flags: As recommended by manufacturer.

B. Ribbon Tape and Trace Wire:

1. Continuous over top of pipe.
2. If multiple pipes occur in common trench, locate tape or wire above centerline of trench.
3. Place Ribbon Tape and Trace Wire in the correct orientation, and anchor as necessary to prevent dislocation during placement of backfill.
4. Backfill above Ribbon Tape and Trace Wire taking care to avoid dislocation. Compaction equipment shall not directly contact the Ribbon Tape or Trace Wire.
5. Coordinate with trench Work as specified in Section 312333 “Trenching and Backfilling” Section 312000 “Earthwork”.

END OF SECTION 330526

© 2023 CDM Smith
All Rights Reserved

This page intentionally left blank.

© 2023 CDM Smith
All Rights Reserved

SECTION 333400 - SANITARY UTILITY SEWERAGE FORCE MAINS

PART 1 - GENERAL

1.1 RELATED DOCUMENTS

A. Drawings and general provisions of the Contract, including General and Supplementary Conditions and Division 01 Specification Sections, apply to this Section.

1.2 SUMMARY

A. Section Includes:

1. Force mains.
2. Bedding and cover materials.

B. Related Requirements:

1. Section 033000 “Cast-in-Place Concrete” for concrete material requirements.
2. Section 310515 “Soils and Aggregates for Earthwork” for soil backfill from above pipe to finish grade.
3. Section 312333 “Trenching and Backfilling” for excavation, backfilling, compacting, and fill over underground pipe markers.
4. Section CIP12 “Testing of Pipelines and Manholes” for pressure, infiltration, and deflection testing.
5. Section 330526 “Utility Identification” for pipe markers.
6. Section W1 “Ductile Iron Pipe and Fittings” for Ductile Iron pipe.
7. Section WW2 “PVC Wastewater Pipe” for PVC pipe.

1.3 ACTION SUBMITTALS

A. Product Data: Manufacturer information indicating pipe material used, pipe accessories, valves, joint fusion process

B. Shop Drawings:

1. Piping piece numbers and locations.
2. Restrained joint locations.

1.4 INFORMATIONAL SUBMITTALS

A. Manufacturer's Certificate: Products meet or exceed specified requirements.

B. Manufacturer Instructions: Special procedures required to install specified products.

C. Field Quality-Control Submittals: Results of Contractor-furnished tests and inspections.

D. Qualifications Statements:

1. Qualifications for manufacturer, installer, and licensed professional.
2. Manufacturer's approval of installer.

1.5 CLOSEOUT SUBMITTALS

A. Project Record Documents: Record invert elevations and actual location of pipe runs and connections.

B. Identify and describe unexpected variations to subsoil conditions or discovery of uncharted utilities.

1.6 QUALITY ASSURANCE

A. Design DIP restrained joints according to DIPRA standards.

B. Perform Work according to City of Georgetown standards

1.7 QUALIFICATIONS

A. Manufacturer: Company specializing in manufacturing products specified in this Section with minimum three years' experience.

B. Installer: Company specializing in performing Work of this Section with minimum five years' documented experience and approved by manufacturer.

C. Licensed Professional: Professional engineer experienced in design of specified Work and licensed in the State of Texas.

1.8 DELIVERY, STORAGE, AND HANDLING

A. Inspection: Accept materials on Site in manufacturer's original packaging and inspect for damage.

B. Storage:

1. Store materials according to manufacturer instructions.
2. Do not place materials on private property without written permission of property owner.
3. Do not stack pipe higher than recommended by pipe manufacturer.

C. Protection:

1. Protect materials from moisture and dust by storing in clean, dry location remote from construction operations areas.

2. Store gaskets for mechanical and push-on joints in cool and dry location, out of direct sunlight, and not in contact with petroleum products.
3. Provide additional protection according to manufacturer instructions.

1.9 EXISTING CONDITIONS

A. Field Measurements:

1. Verify field measurements prior to fabrication.
2. Indicate field measurements on Shop Drawings.

PART 2 - PRODUCTS

2.1 FORCE MAIN

A. Ductile-Iron Pipe:

1. Comply with AWWA C151 and AWWA C104.
2. Lining: Cement mortar, double thickness
3. Pressure Classes:

a. Sizes 3 to 12 Inches: 350 psig.
b. Sizes 14 to 20-Inches: 250 psig.

B. Ductile-Iron Fittings:

1. Comply with AWWA C153.
2. Pressure Rating: 250 psig.
3. Lining: Cement mortar, double thickness and outside coated.

C. Joints:

1. Comply with AWWA C111.
2. Type: Mechanical or push on.

D. Rubber Gaskets, Lubricants, Glands, Bolts, and Nuts: Comply with AWWA C111.

2.2 PVC PIPE

A. PVC Pressure Sewer Pipe and Fittings, 4- to 60 -Inch:

1. Comply with AWWA C900.
2. Class: 235 psi.
3. DR: 18.
4. Joints: restrained

2.3 MIXES

A. Concrete: As specified in Section 033000 “Cast-in-Place Concrete.”

2.4 ACCESSORIES

A. Pipe Markers: As specified in Section 330526 “Utility Identification.”

PART 3 - EXECUTION

3.1 EXAMINATION

A. Verify that trench cut is ready to receive Work.

B. Verify that excavations, dimensions, and elevations are as indicated on Drawings.

3.2 PREPARATION

A. Correct over-excavation with NCDOT #57 stone.

B. Remove large stones or other hard matter capable of damaging pipe or of impeding consistent backfilling or compaction.

3.3 INSTALLATION

A. Bedding:

1. Excavate pipe trench as specified in Section 312333 “Trenching and Backfilling”.
2. Place bedding material at trench bottom.
3. Level materials in continuous layers not exceeding 6 inches in depth.
4. Maintain + 2 percent of optimum moisture content of bedding material to attain required compaction density.

B. Piping:

1. Install pipe, fittings, and accessories as indicated on Drawings.
2. Route piping in straight line.
3. Install bedding at sides and over top of pipe to minimum compacted thickness of 12 inches.
4. Backfilling and Compacting:

    a. As specified in Section 312333 “Trenching and Backfilling”.
    b. Do not displace or damage pipe while compacting.

5. Pipe Markers: As specified in Section 330526 “Utility Identification."

C. Thrust Restraints:

1. Pressure pipeline with restrained joints or concrete thrust blocking at bends, tees, and changes in direction.

D. Cradles and Encasements for Pipelines: Where indicated on Drawings as specified in Section 033000 “Cast-in-Place Concrete.”

3.4 FIELD QUALITY CONTROL

A. Inspections: Request inspection by Engineer prior to and immediately after placing bedding.

B. Testing:

1. If tests indicate that Work does not meet specified requirements, remove Work, replace, and retest.
2. Pipe Testing:

   a. Pressure Test: As specified in Section CIP12 “Testing of Pipelines and Manholes.”
   b. Infiltration Test: As specified in Section CIP12 “Testing of Pipelines and Manholes.”
   c. Deflection Test: As specified in Section CIP12 “Testing of Pipelines and Manholes.”

3. Compaction Testing:

   a. Comply with ASTM D698
   b. Testing Frequency: One density and water content test should be performed for every 100 linear feet of compacted utility trench backfill.

3.5 PROTECTION

A. Protect pipe and aggregate cover from damage or displacement until backfilling operation is in progress.

END OF SECTION 333400

© 2023 CDM Smith
All Rights Reserved

This page intentionally left blank.

© 2023 CDM Smith
All Rights Reserved

SECTION 400506 - COUPLINGS, ADAPTERS, AND SPECIALS FOR PROCESS PIPING

PART 1 - GENERAL

1.1 RELATED DOCUMENTS

A. Drawings and general provisions of the Contract, including General and Supplementary Conditions and Division 01 Specification Sections, apply to this Section.

1.2 SUMMARY

A. Section Includes:

1. Pipe penetrations.
2. Pipe sleeves.
3. Wall castings.
4. Sealing materials.
5. Miscellaneous materials
6. Flexible connections.
7. Expansion joints.
8. Sleeve-type couplings.
9. Split or grooved couplings
10. Quick connect couplings.
11. Dielectric connectors.
12. Plugs and caps.
13. Miscellaneous adaptors.
14. Vents and drains.
15. Service clamps.
16. Cleanouts.
17. Floor drains.
18. Unions.
19. Flanged joints.
20. Appurtenances and Miscellaneous items.
21. Flexible tubing.
22. Annular Sensor isolator.

B. Related Requirements:

1. Section 055000 "Metal Fabrications" for miscellaneous metalwork and fasteners as required by this Section.
2. Section 400507 "Hangers and Supports for Process Piping" for hangers, anchors, sleeves, and sealing of piping to adjacent structures.
3. Section 400519 "Ductile Iron Process Pipe" for ductile-iron piping materials and appurtenances.
4. Section 400551 "Common Requirements for Process Valves" for common product requirements for valves for placement by this Section.

1.3 DEFINITIONS

A. FM: Factory Mutual Insurance Company; FM Global is the communicative name of the company.

B. WH: Warnock Hersey; indicates compliance to relevant building codes, association criteria, and product safety and performance standards.

C. Firestopping (Through-Penetration Protection System): The sealing or stuffing material or assembly placed in spaces between and penetrations through building materials to arrest movement of fire, smoke, heat, and hot gases through fire-rated construction.

1.4 SUBMITTALS

A. Section 013300 - Submittal Procedures: Requirements for submittals.

B. Product Data:

1. Submit manufacturer catalog information for each specified product, including installation instructions.
2. Schedules of pipe, fittings, special castings, penetrations and seals, couplings, expansion joints and other appurtenances in detail per each process area.
3. Flexible Pipe Connectors: Indicate maximum temperature and pressure rating, face-to-face length, live length, hose wall thickness, hose convolutions per foot and per assembly, fundamental frequency of assembly, braid structure, and total number of wires in braid.
4. Expansion Joints: Indicate maximum temperature, pressure rating, and expansion compensation.

C. Shop Drawings:

1. Identification:

   a. Submit list of wording, symbols, letter size, and color coding for pipe identification.
   b. Comply with ASME A13.1.

2. Indicate restrained joint details and materials.
3. Submit layout drawings showing piece numbers and location, indicating restrained joint locations.
4. Indicate layout of piping systems, including flexible connectors, expansion joints and compensators, loops, offsets, and swing joints.

D. Manufacturer's Certificate: Certify that all products meet or exceed specified requirements.

E. Welder Certificates: Certify welders and welding procedures employed on Work, verifying AWS qualification within previous 12 months.

F. Manufacturer Instructions: Submit special procedures and setting dimensions.

G. Source Quality-Control Submittals: Indicate results of factory tests and inspections.

H. Field Quality-Control Submittals: Indicate results of Contractor-furnished tests and inspections.

I. Qualifications Statements:

1. Submit qualifications for manufacturer, installer, and licensed professional.
2. Submit manufacturer's approval of installer.
3. Welders: Qualify procedures and personnel according to ASME BPVC-IX or AWS D1.1/D1.1M.

1.5 CLOSEOUT SUBMITTALS

A. Project Record Documents: Record actual locations of piping appurtenances.

B. Identify and describe unexpected variations to pipe routing or discovery of uncharted utilities.

1.6 QUALITY ASSURANCE

A. Perform Work according to ASME B31.9 for installation of piping systems and according to AWS D1.1/D1.1M for welding materials and procedures.

B. Perform Work according to manufacturer’s installation requirements for installation of piping systems and appurtenances.

C. Perform Work according to State of Texas Commission of Environmental Quality and City of Georgetown standards.

1.7 QUALIFICATIONS

A. Manufacturer: Company specializing in manufacturing products specified in this Section with minimum five years' documented experience.

B. Installer: Company specializing in performing Work of this Section with minimum five years' documented experience.

C. Welders: AWS qualified within previous 12 months for employed weld types.

D. Licensed Professional: Professional engineer experienced in design of specified Work and licensed in State of Texas.

1.8 DELIVERY, STORAGE, AND HANDLING

A. Inspection: Accept materials on Site in manufacturer's original packaging and inspect for damage.

B. Store materials according to manufacturer instructions.

C. Protection:

1. Protect materials from moisture and dust by storing in clean, dry location remote from construction operations areas.
2. Furnish temporary end caps and closures on piping and fittings and maintain in place until installation.
3. Provide additional protection according to manufacturer instructions.

1.9 EXISTING CONDITIONS

A. Field Measurements:

1. Verify field measurements prior to fabrication.
2. Indicate field measurements on Shop Drawings.

1.10 WARRANTY

A. Section 016000 “Product Requirements”: Requirements for warranties.

PART 2 - PRODUCTS

2.1 GENERAL

A. Specific piping materials and appurtenances are specified in the respective Piping or System Sections.

B. Use of a manufacturer's name or model number is for the purpose of establishing the standard of quality and general configuration desired.

C. Equipment:

1. Size shown on Drawings or as noted.
2. Of same type: Identical and from one manufacturer.
3. Include name of the manufacturer, nominal size, flow directional arrows (if applicable), working pressure for which they are designed, and standard referenced specifications cast in raised letters or indelibly marked upon some appropriate part of the body.

D. Working Pressure: Unless otherwise noted, items shall have a minimum of 150 psi or be of the same working pressure as the pipe they connect to, whichever is higher and suitable for the pressures noted where they are installed.

E. Housing for Units: Minimum, weather tight, and suitable for their installed location.

F. Joints, Size, and Material:

1. Except where noted, all joints referred to herein shall be of the same type, nominal diameter, material, and with a minimum rating equal to the pipe or fittings they are connected to.
2. Items exposed to view, or in vaults, with connection diameter:

a. Smaller than 3-inch: Threaded (or solvent weld with true union if on plastic) ends.
b. 3-inch and larger (and all diameter connections to equipment): Flanged ends.

3. Buried Items:

a. Smaller than 3-inch: Threaded (not on plastic), solvent weld, or regular weld ends.
b. 3-inch and Larger: Mechanical joints, except where otherwise indicated.

G. Hardware Buried, Submerged, within 2-Feet Above Any Liquid from Bottom of Pipe, or Exposed to Corrosive Environment or Fluids: Minimum Type 316 stainless steel.

2.2 PIPE PENETRATIONS

A. Performance and Design Criteria:

1. Firestopping Materials: As specified in Section 078413 “Penetration Firestopping.”

2.3 PIPE SLEEVES

A. All construction except new concrete walls:

1. Material: Schedule 40 galvanized steel conforming to ASTM A53.
2. 2-inch minimum circumference water stop welded to exterior sleeve at midpoint.
3. Ends cut and ground to be:

a. Flush with ground.
b. Flush with ceiling.
c. 2 inches above finished floors.
d. Sealed with caulking.
e. Sized as required.

B. New concrete walls with pipes up to 20 inches in diameter:

1. Material: non-metallic High-Density Polyethylene Sleeves (HDPE).
2. Integral hollow molded water stops.

a. 4 inches larger than the outside diameter of the sleeve.

3. End caps for forming and reinforcing ribs.
4. Domestically manufactured by:

a. Century-Line as manufactured by Pipeline Seal & Insulator, Inc., Houston, TX, or equal.

C. New concrete with pipes 20 to 60 inches in diameter:

1. Material: Molded HDPE modular interlocking discs to make the width of the wall.

a. Corrugated.

b. Cell-Cast as manufactured by Pipeline Seal & Insulator, Inc., Houston, TX, or equal.

D. External Wall Penetrations:

1. 36-inch diameter and less may be made by means of a ductile iron sleeve capable of being bolted directly to the formwork.
2. Seal of the annular space between the carrier pipe and the sleeve made by means of a confined rubber gasket and be capable of withstanding 350 psi.
3. Sleeve to have an integrally cast waterstop of 1/2-inch minimum thickness, 2-1/2-inch minimum height.
4. Manufacturers: Omni-Sleeve, Malden, MA or equal.

2.4 WALL CASTINGS

A. Ductile iron conforming to ANSI/AWWA A21.51/C151, thickness Class 53.

B. Diameter as required.

C. Flanges and/or mechanical joint bells drilled and tapped for studs where flush with the wall.

D. Castings provided with a 2-inch minimum circumferential flange/waterstop integrally cast with or welded to the casting.

E. Located as follows:

1. Castings Set Flush With Walls: Located at the center of the overall length of the casting,
2. Castings Which Extend Through Wall: Located within the middle third of the wall.

2.5 SEALING MATERIALS

A. Mechanical Seals:

1. Of rubber links shaped to continuously fill the annular space between the pipe and the wall opening or sleeve.
2. Link pressure plates molded of glass reinforced nylon:

   a. Colored throughout elastomer.
   b. Permanent identification of the size and manufacturer's name molded into the pressure plate and sealing element.

3. Hardware:

   a. Mild Steel: 60,000 psi minimum tensile strength.
   b. 2-part Zinc Dichromate coating per ASTM B633.
   c. Organic Coating: tested in accordance with ASTM B-117 to pass a 1,500-hour salt spray test.
   d. Use Type 316 Stainless Steel hardware:

      1) For submerged service.

2) For penetrations in tanks containing sludge or wastewater.

4. Completed Sealing System:

a. Duty pressure rated for 20 psig differential pressure.
b. EPDM for all services except fire rated assemblies.

1) Fire rated seals use silicone link material.

c. Manufacturer: PSI-Thunderline/ Link-Seal as manufactured by Pipeline Seal & Insulator, Inc., Houston, TX, or approved equal.

B. Diaphragm Seals:

1. Diaphragm seals shall be installed for all pressure gauges and pressure switches, to protect pressure gauges and pressure switches from contact with the fluid in the pipeline. Gauges shall be furnished as part of a complete factory assembly, including gauge, snubber, diaphragm seal, liquid fill, isolation valve and interconnecting piping. Furnish also a 1/4-inch backflushing connection and ball valve.
2. Diaphragm seals shall be minimum 2 1/2-inch diameter, or as required for the connected pressure gauges. Diaphragm shall be "thread attached" to both piping and pressure switches or gauges. Furnish mineral oil fill between the diaphragm seal and the gauge.

a. Diaphragm seals shall have an upper housing of cadmium plated carbon steel, with the lower housing of Type 316 stainless steel with Type 304 stainless steel bolts. Diaphragms shall be Teflon.
b. Each diaphragm seal shall be connected to its respective piping or equipment with threaded red brass pipe and fittings or as shown on the Drawings. Pipe size and diaphragm tap size shall match the size of the gauge tap on the equipment, but shall not be less than 3/4 inch. Furnish a ball valve shut off valve between the pipeline or equipment and the diaphragm seal.
c. Each diaphragm seal shall have a minimum 1/4-inch NPT flush connection with ball valve and gauge tap to match the size of the gauge.
d. Furnish pulsation dampeners adequate to prevent pulsation and/or vibration of the gauge indicator under all system operating conditions.
e. Pump gauges shall connect to the diaphragm seal by a flexible Type 304 stainless steel capillary tube. Gauges shall be mounted on a support stand independent of the pump and piping, to minimize vibration of the gauges caused by vibration of the equipment or piping. Mount both the suction and discharge gauges at the same elevation. Furnish supports as specified in Section 15140, or attach gauges to the seal water assembly support (where applicable). Minimum 2 1/2-inch diameter, or as required for the connected pressure gauges. The diaphragm shall be "thread attached" to both piping and pressure switches or gauges. Furnish mineral oil fill between the diaphragm seal and the gauge.
f. Diaphragm seals shall be Type SG by Mansfield and Green, equal by Ashcroft, or equal.

3. Other materials shall be certified corrosion resistant for seal location and fluid.

C. Sealant:

1. A two-part foamed silicone elastomer manufactured by:

    a. Dow Corning Co., Product No. 3-6548 silicone R.T.V.
    b. 3M brand fire barrier products caulk C.P. 25 and 3M brand moldable putty MP+.
    c. Flame-Safe fire stop systems FS-900 by Rectorseal.

2. Sealant bead configuration, depth, and width in accordance with manufacturer's recommendations.

2.6 MISCELLANEOUS MATERIALS

A. Bonding Compound:

1. Sikadur Hi-Mod epoxy by Sika Corp.
2. Euco 452 by Euclid Chemical Corp.; Master Builders Company.
3. Or equal.

B. Non-shrink Grout:

1. Masterflow 713 by Master Builders Co.
2. Euco NS by Euclid Chemical Co.
3. Five Star Grout by U.S. Grout Corp.
4. Or equal.

C. Escutcheons Plates: Hot dipped galvanized steel unless otherwise indicated on Drawings. Provide Type 316 stainless steel hardware for wet submerged areas.

2.7 FLEXIBLE CONNECTIONS

A. Manufacturers:

1. For pressure pipe applications and applications with steel and copper piping: Flexicraft Industries, Chicago, IL; Hyspan Precision Products, Inc.; Metraflex Company, Chicago, IL; Victaulic Company, Easton, PA or equal.
2. For non-pressurized applications involving plastic, clay, asbestos cement, or cast-iron applications: Fernco or equal.
3. For pressure pipe applications with ductile iron piping: Flex-Lok Ball Joint Pipe by American Ductile Iron Pipe or equal.

B. Steel Piping:

1. Inner Hose: Type 321 stainless steel.
2. Exterior Sleeve: Braided Type 321 stainless steel
3. Pressure Rating: 125 psig WSP at 450 degrees F.
4. Joints: Flanged or as specified for pipe joints.
5. Size: As indicated on Drawings.
6. Maximum Offset: According to manufacturer’s requirements.

C. Copper Piping:

1. Inner Hose: Bronze.
2. Exterior Sleeve: Braided bronze.
3. Pressure Rating: 125 psig WSP at 450 degrees F.
4. Joints: Flanged or as specified for pipe joints.
5. Size: As indicated on Drawings.
6. Maximum Offset: According to manufacturer's requirements.

D. Ductile Iron Piping (Ground Storage Tank Inlet Pipe, Outlet Pipe, Filter Gallery Pipe, and Pump Station Suction Pipe):

1. Pipe: Ductile Iron.
2. Pressure Rating: 250 psi.
3. Joints: Flex-Lok Ball Joint.
4. Restrained Maximum Safe End Pull:

   a. 12-inch minimum 76 tons.
   b. 30-inch minimum 225 tons.
   c. 36-inch minim 255 tons.

5. Joint Deflection:

   a. 12-inch available to 25 Degrees.
   b. 30-inch available to 15 Degrees.
   c. 36-inch available to 15 Degrees.

6. Size: 12, 30 and 36-inches and as indicated on Drawings.

E. Flanged Adaptors:

1. Flanged adaptor connections for grooved or shouldered end pipe compatible with split couplings at fittings, valves and equipment shall be VIC-Flange Style 341 or 342 as by the Victaulic Company of America; Gustin-Bacon; or equal.
2. Flanged adaptor connections for plain end pipe at fittings, valves and equipment shall be Dresser Style 127 or 128; Uni-Flange Adapter by Ford Meter Box Co.; similar models by Smith-Blair; or equal.

F. Pump and Equipment Flexible Connectors:

1. Connectors shall be for the purpose of isolating equipment vibration from the piping.
2. Expansion/vibration joints of the single arch type of butyl rubber construction with carcass of high-grade woven cotton or suitable synthetic fiber and individual solid steel ring reinforcement. Soft rubber fillers shall be integrally cured into the arches to provide a smooth flow path to prevent settling of material into the arch. Joints shall be constructed to pipeline size and to meet working pressures and corrosive conditions similar to the line where installed. Joints shall have full faced reinforced butyl flanges integral with the body.
3. Provide split steel or ductile iron back-up rings and design for mating with ANSI Standard minimum 150-pound flanges unless otherwise noted.
4. Flexible Connectors Used for Backwash Air Piping: Constructed of EPDM, or other material capable of withstanding temperatures up to 250 degrees F.
5. Flanges: Designed for mating with ANSI Standard minimum 150-pound flanges.

6. Unless otherwise noted, flexible connections shall be furnished with control (harness) units. Harness units shall consist of minimum two drilled plates, stretcher bolts, and rubber washers backed by metal washers. Stretcher bolts shall prevent over-elongation of the joint. Extra nuts shall be provided on the stretcher bolts on the inside of the plate to prevent over-compression. Nuts, bolts, and plates shall be Type 304 stainless steel, unless Type 316 is required as specified.
7. Manufacturer of the expansion joints shall be a member of the Rubber Expansion Joint Division of the Fluid Sealing Association. Expansion joints shall be Style 1025 filled arch by General Rubber Corp., South Hackensack, New Jersey; or similar products of Mercer Rubber; Goodall Rubber; Garloc; Red Valve Co., Inc.; Proco Products Inc., Stockton, California; or approved equal.
8. In addition to other locations shown on Drawings, expansion joints shall be utilized in all exposed piping, within one foot of a building expansion joint, and on the suction and discharge side of all positive displacement pumps, compressors, and rotating machinery, as close to the unit as possible.

G. Other Flexible Connectors:

1. Provide a flexible connector for the seal wastewater connection to each pump stuffing box. Connectors shall be of hose of Buna-N or similar resilient material, with fiber reinforcement, rated minimum 150 psi with bronze or Type 304 stainless steel NPT end fittings and shall be 12-inch in length. Connectors shall be for the purpose of isolating pump vibration from the seal wastewater piping.
2. Flexible connectors for HVAC systems are specified in Division 23.

2.8 EXPANSION JOINTS

A. Manufacturers:

1. Flexicraft Industries, Chicago, IL; Hyspan Precision Products, Inc.; Metraflex Company, Chicago, IL; Victaulic Company, Easton, PA or equal.

B. Performance and Design Criteria:

1. Bellow Design: According to Section C of EJMA Standards.
2. Rubber spool design.

C. Stainless-Steel Bellows Type:

1. Pressure Rating: 125 psig WSP at 400 degrees F.
2. Maximum Compression: 1-3/4 inches.
3. Maximum Extension: 1/4 inch.
4. Joint: Flanged.
5. Size: As indicated on Drawings.
6. Application: Steel piping 3 inches and smaller.

D. Single and Multiple-Arch Rubber Spool Type:

1. Spool: EPDM suitable for wastewater and/or wastewater sludge.
2. Backing Rings: Type 316 Series stainless steel.

3. Working Pressure: 50 psig or maximum operating pressure indicated on Drawings, whichever is greater.
4. Maximum Temperature: 120 degrees F liquid, 300 degrees F air.
5. Maximum Compression: 1/2-inch.
6. Maximum Elongation: 1/2-inch.
7. Maximum Offset: 1/2-inch.
8. Maximum Angular Movement: 30 degrees.
9. Joint: Full-faced, drilled to 150 # Standard, integral to body, with Backing Rings.
10. Size: As indicated on Drawings
11. Accessories: Stainless steel control rods, filled arches supplied only in sludge service.
12. Application: Piping 1 inch and larger.

E. Manufacturer shall warrant this product to be suitable for the proposed conditions and shall furnish Drawings for approval giving materials of construction, including gauge of corrugated element, maximum test pressure force to compress joint, bellows spring rate, shear force and end moment due to calculated traverse only. Manufacturer shall also furnish evidence of completing cycle life testing for the maximum diameter to be installed and shall indicate such assured cycle life test results on material submitted for approval.

F. Flexible Metal Hose:

1. Constructed of corrugated inner tubing of suitable material (minimum Type 304 stainless steel) and have an outer shield of wire-braid of either tin-bronze or Type 321 stainless steel.
2. Length not less than five times the nominal pipe diameter multiplied by pi (3.14).
3. Have 150 psi flanged ends in all sizes and suitable for pressure up to 150 psig and temperatures to 400 degrees F.
4. Manufactured by Flexonics; Metraflex; or equal.

2.9 DIELECTRIC CONNECTORS

A. Dielectric pipe fittings/insulators and unions shall be used to prevent galvanic action wherever valves or piping of dissimilar metals connect. This shall be particularly the case for copper, brass and bronze piping connecting to cast iron or steel piping systems, etc.

B. Dielectric unions shall be used for 2 inches and smaller connections unless flanged connection shown on Drawings. Steel union nuts shall meet ASTM A575 requirements. Steel or ductile iron connection end shall have a steel body and shall have accurately machined taper tapped pipe threads in accordance with ANSI B2.1. Copper connection end shall be a copper solder joint that meets requirements of ASTM B88. Dielectric unions shall be rated for at least 250 psig at 210 degrees F.

C. Dielectric flange unions shall be used for connections 2-1/2 inches to 12-inch. Cast iron flanges shall meet ASTM A126; the copper solder end shall meet ASTM B62 and the pipe thread shall meet ANSI B2.1. Dielectric flange unions shall be rated for at least 175 psig at 210 degrees F.

D. Dielectric unions and flange unions shall be as manufactured by Epco Inc., Cleveland, OH or equal.

E. Dielectric waterway fittings may be used for connections 8 inches and smaller. Zinc-electroplated ductile iron or steel pipe nipple with inert thermoplastic lining and grooved or threaded ends; Style 47 as manufactured by Victaulic Company, Easton, PA.

F. Flange insulating kits shall be as acceptable to the Engineer, as manufactured by PSI or equal. Provide flange insulating kits at all magmeter piping connections.

2.10 PLUGS AND CAPS

A. Provide standard plug or cap as required for testing; plugs, caps suitable for permanent service.

B. Plug or cap or otherwise cover all piping work in progress.

2.11 MISCELLANEOUS ADAPTORS

A. Between different types of pipes and/or fittings, special adapters may be required to provide proper connection. Some of these may be indicated on Drawings or specified with individual types of pipes or equipment. However, it is Contractor's responsibility to ensure proper connection between various types of pipes to structures and between pipe and valves, gates, fittings, and other appurtenances. Provide all adapters as required, whether specifically noted or not.

2.12 VENTS AND DRAINS

A. Provide 1/2-inch vents at high point in each system. Vent connections may be tapped, provided the tap will accept three full threads on the bronze nipple.

B. Provide 1-inch drains to permit drainage of each system; provide hose end valve.

2.13 FLOOR DRAINS

A. Floor drains shall have 8-inch minimum diameter, adjustable collar, Nikaloy top strainers, epoxy coated cast iron bodies and sediment bucket. Floor drains shall have outlet connections for 4-inch cast iron bell and spigot soil pipe except where required by other type pipe and/or indicated on the Drawings, and they shall be Type No. 30000-E as manufactured by Josam or equal.

B. Floor drains shall have 5-inch maximum diameter with an integral P-trap connection matching line size with primer tap unless noted otherwise on Drawings. No sediment buckets are required. These drain types shall be 30000 series as manufactured by Josam or equal.

2.14 UNIONS

A. Unions shall be brass or bronze unions for joining nonferrous pipe.

B. Malleable brass or bronze-seated iron or steel unions for joining ferrous pipe.

C. PVC unions shall have solvent welded connections with Viton O-ring for joining PVC pipe; CPVC unions for joining CPVC pipe.

D. Unions for steel piping 2-1/2-inch and less shall be malleable iron complying to FS WW-U-531, Class 1, Type A for use with black steel and Type B for use with galvanized steel pipe. Unions for steel piping 3-inch and greater shall be flanges. Use dielectric union between dissimilar metals and where otherwise noted.

2.15 FLANGED JOINTS

A. Flanged material shall be in accordance with applicable piping material specified with different type pipes and in Section 400551. Bolts and nuts for non-corrosive areas shall be Grade B, ASTM A307, bolt number and size same as flange standard; studs of same quality as machine bolts. Gaskets: 1/8-inch-thick ethylene propylene (EPDM) gaskets.

B. Provide bolt torque calculations demonstrating that the supplied gasket will seat within the stress requirements of the supplied bolt.

C. Flange bolts shall be coated with an anti-seize compound prior to installation.

2.16 APPURTENANCES AND MISCELLANEOUS ITEMS

A. Provide gaskets, glands, bolts, nuts, and other required hardware for connection of piping and appurtenances.

1. Bolts and nuts shall be high strength, Type 316 stainless steel if submerged, buried, or subject to splashing and cadmium plated otherwise, with tee-head and hexagon nut.
2. Other hardware shall be of the size, type, and number as required and recommended by the piping or appurtenance manufacturer and as specified herein.

B. Gaskets for flanges shall be full face and suitable for 200 degrees F operating temperature for wastewater services, or material certified corrosion-resistant in the service they are used on.

C. Plugs, caps, and similar accessories shall be of the same material as the pipe and of the locking type, unless otherwise noted.

2.17 FLEXIBLE TUBING

A. Flexible tubing for connection between LPA piping and automatic drain valves shall be PVC, neoprene, EPDM suitable for temperatures up to 250 degrees F. As indicated on the Drawings, tubing shall be clear. If not indicated on Drawings, tubing may be non-transparent PC.

2.18 FINISHES

A. Prepare piping appurtenances for field finishes as specified in Division 09.

2.19 SOURCE QUALITY CONTROL

A. Provide shop inspection and testing of completed assemblies.

B. Certificate of Compliance:

1. If manufacturer is approved by authorities having jurisdiction, submit certificate of compliance indicating Work performed at manufacturer's facility conforms to Contract Documents.
2. Specified shop tests are not required for Work performed by approved manufacturer.

PART 3 - EXECUTION

3.1 EXAMINATION

A. Verify that field dimensions are as indicated on Shop Drawings.

B. Inspect existing flanges for nonstandard bolt hole configurations or design and verify that new pipe and flanges mate properly.

C. Verify that openings are ready to receive sleeves and firestopping.

D. Verify that pipe plain ends to receive sleeve-type couplings are smooth and round for 12 inches from pipe ends.

E. Verify that pipe outside diameter conforms to sleeve manufacturer's requirements.

3.2 PREPARATION

A. Cleaning: Thoroughly clean end connections before installation.

B. Close pipe and equipment openings with caps or plugs during installation.

C. Surface Preparation: Clean surfaces to remove foreign substances.

3.3 INSTALLATION

A. Install items as part of their piping system per manufacturer's instructions in locations shown and as required, true to alignment and rigidly supported. Any damage to the items shall be repaired to the satisfaction of Engineer before they are installed.

B. Install brackets, extension rods, guides, various types of operators, and appurtenances as shown on Drawings, or otherwise required. Before setting these items, check all Drawings and figures that have a direct bearing on their location. Contractor shall be responsible for the proper location of all items during the construction of the Work.

C. Inspect materials for defects in construction and materials. Debris and foreign material shall be cleaned out of openings, etc. Flange covers shall remain in place until connected piping is in

place. Operating mechanisms shall be operated to check their proper functioning and all nuts and bolts checked for tightness. Items that do not operate easily, or are otherwise defective, shall be repaired or replaced at no additional cost to Owner.

D. Where installation is covered by a Reference Standard, installation shall be in accordance with that Standard, except as herein modified, and Contractor shall certify such. Also note additional requirements in other parts of this Section.

E. Unless otherwise noted, connecting joints for all items shall be made up utilizing the same procedures as specified under the applicable type connecting pipe joint and all items shall be installed in the proper position as recommended by the manufacturer. Contractor shall be responsible for verifying manufacturers' torquing requirements for all items.

F. Coating: Finish piping appurtenances as specified in Section 099100 “Painting” for service conditions.

G. Install diaphragm seals for pressure gauges and pressure switches, to protect pressure gauges and pressure switches from contact with the fluid in the pipeline.

H. Pipe Penetrations:

1. Flashing:

a. Provide flexible flashing and metal counterflashing where piping penetrates weatherproofed or waterproofed walls, floors, and roofs.
b. Flash floor drains with topping over finished areas with lead, 10 inches clear on sides, with minimum 36-by-36-inch sheet size.
c. Fasten flashing to drain clamp device.

2. Sleeves:

a. Exterior Watertight Entries: Seal with mechanical sleeve seals.
b. Set sleeves in position in forms and provide reinforcement around sleeves.
c. Size sleeves large enough to allow for movement due to expansion and contraction and provide for continuous insulation wrapping.
d. Extend sleeves through floors 2 inches above finished floor level and calk sleeves.
e. Where piping penetrates floor, ceiling, or wall, close off space between pipe and adjacent Work with firestopping insulation and calk.
f. Provide close-fitting metal collar or escutcheon covers at both sides of penetration.
g. Install escutcheons at finished surfaces.

I. Flexible Connections: Install flexible couplings at connections to equipment and where indicated on Drawings.

J. Expansion Joints:

1. Install flexible couplings and expansion joints at connections to equipment and where indicated on Shop Drawings.
2. If expansion joint is supplied with internal sleeve, indicate flow direction on outside of joint.

K. Vents and Drains:

1. Provide vents and drains in the following places:

a. Wastewater Lines: Vents at high points and drains at low points.

L. Grooved Joints:

1. Grooved joint couplings and specialties shall be installed in accordance with the manufacturer's written installation instructions.

M. Insulation: As specified in Section 404213 "Process Piping Insulation."

N. Unions:

1. Unions screwed or flanged shall be provided where indicated and in the following locations even if not indicated:

a. In long runs of piping to permit convenient disassembly for alterations or repairs.
b. In by-passes around equipment.
c. In connections to tanks, pumps, and other equipment between the shut-off valve and the equipment.
d. In connections on both sides of traps, controls, and automatic control valves.

3.4 TESTING, INSPECTION AND CORRECTION OF DEFFICIENCIES

A. Take care not to over pressure items during pipe testing. If any item proves to be defective, it shall be replaced or repaired to the satisfaction of Engineer.

B. No testing shall be performed until the manufacturer's representative has provided written certification that the installed items or equipment has been examined by them and found to be in complete accordance with the manufacturer's requirements.

C. Functional Test: Prior to plant startup, all items shall be inspected for proper alignment, proper operation, proper connection, and satisfactory performance. Operate units continuously while connected to attached piping for startup time (if not noted - for minimum 7 days), without vibration, jamming, leakage, or overheating, and perform the specified function.

D. Various pipes to which the items are to be installed are specified to be field tested. During these tests any defective item shall be adjusted, removed, and replaced, or otherwise made acceptable to Engineer.

E. Test items to demonstrate their conformance with specified operational capabilities and correct deficiencies or the item replaced or otherwise made acceptable to Engineer.

3.5 FIELD QUALITY CONTROL

A. After installation, inspect for proper supports and interferences.

B. Repair damaged coatings with material equal to original coating.

3.6 CLEANING

A. Keep equipment interior clean as installation progresses.

END OF SECTION 400506

© 2023 CDM Smith
All Rights Reserved

This page intentionally left blank.

© 2023 CDM Smith
All Rights Reserved

SECTION 400507 - HANGERS AND SUPPORTS FOR PROCESS PIPING

PART 1 - GENERAL

1.1 RELATED DOCUMENTS

A. Drawings and general provisions of the Contract, including General and Supplementary Conditions and Division 01 Specification Sections, apply to this Section.

1.2 SUMMARY

A. This specification requires Contractor to delegate pipe support design to a pipe support design engineer hired by the Contractor. Where the Drawings show support types and/or locations, they shall be analyzed for adequacy to support loads and stresses calculated by the pipe support designer, modified if required, installed generally where shown, and integrated with the pipe support system design provided by the Contractor.

B. Related Requirements:

1. Section 031000 "Concrete Forming and Accessories" for execution requirements for placement of inserts or sleeves in concrete forms specified by this Section.
2. Section 033000 "Cast-in-Place Concrete" for execution requirements for placement of concrete housekeeping pads specified by this Section.
3. Division 09 for product and execution requirements for painting specified by this Section.
4. Section 400213 “Process Piping Insulation.”
5. Section 400506 “Couplings, Adapters, and Specials for Process Piping.”
6. Section 400519 “Ductile Iron Process Pipe.”

1.3 DEFINITIONS

A. Ferrous Metal: Iron, steel, stainless steel, and alloys with iron as principal component.

B. Wetted or submerged: Submerged, less than 1-foot above liquid surface, below top of channel or tank wall, under cover or slab of channel or tank, or in other damp locations.

C. “Pipe” or “piping” shall mean all piping, piping system(s), hose, tube, fittings, joints, valves, and similar appurtenances.

D. Supports: wherever the word “supports” or “pipe supports” are used, they shall mean pipe supports, hangers, structural connections, concrete inserts (if allowed), anchors, guides, bolts, expansion units, restraints and all restraint, hanging, supporting, allowing controlled expansion, or other means of attaching piping along with the necessary appurtenances.

1.4 COORDINATION

A. Coordinate Work of this Section with piping and equipment connections specified in other Sections and indicated on Drawings.

1.5 PREINSTALLATION MEETINGS

A. Convene minimum one week prior to commencing Work of this Section.

1.6 ACTION SUBMITTALS

A. Product Data: Submit manufacturer's catalog data including load capacity.

B. Shop Drawings: Submit scaled piping layouts for each system. Indicate flow stream, pipe size(s) material(s), schedule(s), lining(s), critical dimensions between pipes, equipment and building features. Indicate by schedule pipe hanger/support type and locations. Provide detail of each type of hangers, supports, anchors, and guides.

C. Delegated Design Submittals: Support System Design.

1. Engage the services of an independent registered professional engineer licensed in the State of Texas ordinarily engaged in the business of pipe support systems analysis and design, to analyze system piping and service conditions, and to develop a detailed support system design, specific to the piping material, pipe joints, valves, and piping appurtenances proposed for use.

    a. The proposed support system engineer shall have at least 5 years of experience in the analysis and design of similar systems, including the use of commercial and custom pipe supports and in the use of commercial pipe stress software programs.
    b. Support system engineering groups include the following:

        1) SAC Incorporated https://www.sacincorporated.com/contact-us/.
        2) Fenny Engineering http://www.fennyengineering.com/contact/.
        3) Piping Solutions and Energy Associates https://www.pseassoc.com/request-for-service/.

2. The support system design shall include:

    a. Criteria by piping system.
    b. Summary of Contractor-selected related components including joints, class, valves, appurtenances, etc., and commercial supports and especially including pipe materials.
    c. Dead weight and dynamic analysis, including system thermal effects and pressure thrusts.

        1) Present each system in an isometric graphic and show the resolved and resultant force and moment systems, as well as all recommended hangers, supports, anchors, restraints, and expansion/flexible joints.

d. Submit support system design to the Engineer for review. The submittal needs to be stamped by a professional engineer registered in Texas.
e. All aspects of the analysis and design to comply with the provisions of ANSI B31.3 and the referenced standards.

3. Coordinate support arrangements to eliminate interference with similar systems to be installed under Plumbing, and Electrical; to account for structural expansion joints and to maintain access for both personnel and for the removal of equipment.

D. Manufacturers' Instructions: Submit special procedures and assembly of components.

1.7 INFORMATIONAL SUBMITTALS

A. Manufacturer's Certificate: Certify that products meet or exceed specified requirements.

B. Welders' Certificate: Submit welders' certification of compliance with AWS D1.1, verifying qualification within previous 12 months.

C. Qualifications Statements:
1. Submit qualifications for manufacturer, fabricator, installer, and licensed professional.
2. Submit manufacturer's approval of installer.

1.8 DELIVERY, STORAGE AND HANDLING

A. All supports and hangers shall be crated, delivered and uncrated so as to protect against any damage.

B. All parts shall be properly protected so that no damage or deterioration shall occur during a prolonged delay from the time of shipment until installation is completed.

C. Finished metal surfaces not galvanized, that are not of stainless-steel construction, or that are not coated, shall be grease coated, to prevent rust and corrosion.

1.9 QUALITY ASSURANCE

A. Perform Work according to AWS D1.1 for welding hanger and support attachments to building structure.

B. Perform Work according to TCEQ and City of Georgetown standards.

C. Maintain copies of each standard affecting the Work of this Section on-Site.

1.10 QUALIFICATIONS

A. Manufacturer: Company specializing in manufacturing Products specified in this Section with minimum three years' experience.

B. Fabricator: Company specializing in fabricating products specified in this Section with minimum three years' experience.

C. Installer: Company specializing in performing Work of this Section with minimum three years' experience and approved by manufacturer.

D. Licensed Professional: Professional engineer experienced in design of specified Work and licensed in the State of Texas.

1.11 DELIVERY, STORAGE, AND HANDLING

A. Inspection: Accept materials on-Site in original factory packaging, labeled with manufacturer's identification.

B. Protect products from weather and construction traffic, dirt, water, chemical, and damage by storing in original packaging.

1.12 EXISTING CONDITIONS

A. Field Measurements: Verify field measurements prior to fabrication. Indicate field measurements on Shop Drawings.

1.13 WARRANTY

A. As indicated in Division 01.

PART 2 - PRODUCTS

2.1 GENERAL

A. Support pipe and appurtenances connected to equipment to prevent any strain being imposed on the equipment. Comply with manufacturer’s requirements regarding piping loads being or not being transmitted to their equipment. Submit certification stating that such requirements have been met.

B. Support and secure all pipe and tubing in the intended position and alignment to prevent significant stresses in the pipe or tubing material, valves, fittings, and other pipe appurtenances. Design all supports to adequately secure the pipe against excessive dislocation due to thermal expansion and contraction, internal flow forces, and all probable external forces such as equipment, pipe, and personnel contact. Any structural steel members required to brace any piping from excessive dislocation shall conform to the applicable requirements of Section 055000 “Metal Fabrications” and shall be furnished and installed under this Section.

C. Contractor may propose minor adjustments to the piping arrangements in order to simplify the supports, or in order to resolve minor conflicts in the work. Such an adjustment might involve minor change to a pipe centerline elevation so that a single trapeze support may be used.

D. Where flexible sleeve, split ring, vibration, or other couplings are required at equipment, tanks, etc., the end opposite to the piece of equipment, tank, etc., shall be rigidly supported to prevent transfer of force systems to the equipment. Do not install fixed or restraining supports between a flexible coupling and the piece of equipment.

E. Pipe supports:

1. Shall not induce point loadings but shall distribute pipe loads evenly along the pipe circumference.
2. Provide supports at changes in direction and elsewhere as shown in the Drawings or as specified herein.
3. No piping shall be supported from other piping or from metal stairs, ladders, and walkways, unless specifically directed or authorized by the Engineer.
4. Provide pipe supports to minimize lateral forces through valves, both sides of flexible split ring type couplings and sleeve type couplings, and to minimize all pipe forces on pump housings. Pump housings shall not be utilized to support connecting pipes.
5. Effects of thermal expansion and contraction of the pipe to be accounted for in the pipe support selection and installation.

F. Insofar as is possible, floor supports shall be given preference. Where specifically indicated, concrete supports, as shown on the Drawings, may be used. Base elbow and base tees shall be supported on concrete pedestals.

G. Restraints, flexible connections, expansion items, and related items as included in other specifications (especially Section 400570 and other individual pipe sections) and shown on the Drawings.

2.2 PERFORMANCE REQUIREMENTS/DESIGN CRITERIA

A. All supports and appurtenances shall be standard products from approved manufacturers wherever possible and shall be adequate to maintain the supported load in proper position under all operating conditions. Any reference to a specific figure number of a specific manufacturer is for the purpose of establishing a type and quality of product and shall not be considered as proprietary. Note that different materials required, as specified in Part 2 MATERIALS, may require different figures or model numbers than those shown.

1. The minimum working factor of safety for all items, with the exception of springs, shall be five times the ultimate tensile strength of the material, assuming 10 feet of water-filled pipe being supported and normal test pressures.
2. Design for all loads using a safety factor of 5.

B. Piping schedule is included in the contract drawings.

C. All items shall be designed with strength and stiffness to support, restrain, and allow expansion of the respective pipes under the maximum combination of peak loading conditions to include pipe weight, liquid weight, liquid movement and pressure forces, thermal expansion and contraction, vibrations, and all probable externally applied forces.

D. Support spacing shall be per ASME B31.3.

E. Complete design details of the pipe system components shall be submitted for review and approval as specified in Part 1. No support shall be installed without approved support system Drawings.

F. The pipe support system shall not impose loads on the supporting structures in excess of the loads for which the supporting structure is designed.

G. Piping will be supported from a pre-engineered structure as specified in Section 133419 "Metal Building Systems." Contractor shall coordinate loads determined by the Contractor's pipe support design engineer with the Contractor's pre-engineered structure manufacturer to ensure the pre-engineered structure is designed to support and accommodate loads from the pipe support system.

H.

H. Seismic Design and restraint requirements, in accordance with the Structural Design criteria.

2.3 MATERIALS

A. For support of metallic pipe:

1. Submerged, buried, or within outdoor structures (vaults, etc.): Type 316 stainless steel (SS).
2. Within chemical areas: Vinyl ester fiberglass reinforced plastic (FRP) for pipe size up to 2 inch, epoxy coated steel for 2-1/2 inches size and larger.
3. Other locations: steel with galvanizing where noted, or if not otherwise noted, coating as required in Division 09 Finished Painting.
4. Additional requirements (including dielectric insulation): see following paragraphs.

B. For support of non-metallic pipe:

1. Submerged, buried, or within vaults: Type 316 stainless steel or FRP.
2. Within chemical areas: Vinyl ester FRP.
3. Other locations: steel with galvanizing where noted, or if not otherwise noted, coating as required in Division 09 Finished Painting; all with local stress protection shields.
4. Additional requirements (including stress protection shields): see following paragraphs.

C. Wherever stainless steel is noted, it shall be Type 316 unless noted otherwise.

2.4 INSULATION

A. See Article ACCESSORIES and Drawings.

B. See also Section 404213.

2.5 SUPPORT AND RESTRAINT SYSTEMS

A. Steel or Ductile Iron Piping:

1. Cast iron and ductile iron, steel, and stainless-steel piping shall be supported at a maximum support spacing of 10 feet with a minimum of one support per pipe section at the joints.
2. Support spacing for ductile iron, steel, and stainless-steel piping 2-in and smaller diameter shall not exceed 5 feet.

B. Copper Piping:

1. Supports for copper pipe shall be copper plated or shall have a 1/16 inch plastic coating.
2. Support spacing for copper piping and tubing 2 inch and smaller diameter shall not exceed 5 feet and greater than 2 inch diameter shall not exceed 8 feet.
3. Where pipe supports come in contact with copper piping, provide protection from galvanic corrosion by: wrapping pipe with 1/16 inch thick neoprene sheet material and galvanized protection shield; isolators similar to Cooper B-Line B3195CT; or copper-plated or PVC-coated hangers and supports.

C. Non-Metallic Piping:

1. All uninsulated non-metallic piping such as PVC, CPVC, HDPE, PVDF, etc., shall be protected from local stress concentrations at each support point. Protection shall be provided by non-metallic protection shields or other method as approved by the Engineer.

    a. Where pipes are bottom supported 180 degrees, arc shields shall be furnished. Where 360-degree arc support is required, such as U-bolts, protection shields shall be provided for the entire pipe circumference. All U-bolts or clamps for non-metallic pipes shall be plastic coated.
    b. Protection shields shall have an 18-gauge minimum thickness, not be less than 12 inches in length and be securely fastened to pipe with Type 316 stainless steel straps not less than 1/2 inch wide.

2. Individually supported PVC pipes shall be supported as recommended by the pipe manufacturer except that support-spacing shall be manufacturers recommendation minus 2-ft. down to 5 ft spacing recommendation, then spacing shall be 3 feet.
3. Supports for horizontal multiple PVC plastic piping:

    a. Shall be continuous wherever possible.
    b. Multiple, suspended, horizontal plastic PVC pipe runs, where possible, shall be supported by ladder type cable trays such as: Husky Ladder Flange Out by MPHusky; or equal.
    c. Rung spacing shall be 12 inches. Tray width shall be approximately 6 inch for single runs and 12 inchesfor double runs.
    d. Ladder type cable trays shall be furnished complete with all hanger rods, rod couplings, concrete inserts, hanger clips, etc., required for a complete support system. Individual plastic pipes shall be secured to the rungs of the cable tray by strap clamps or fasteners similar to: Globe, Series 600; Unistrut Pipe/Conduit Clamps and Hangers; or equal.
    e. Spacing between clamps shall not exceed 9 feet. The cable trays shall provide continuous support along the length of the pipe. Individual clamps, hangers, and supports in contact with plastic PVC pipe shall provide firm support but not so firm as to prevent longitudinal movement due to thermal expansion and contraction.

D. Framing Support System

1. See Part 2 MATERIALS for materials of construction.
2. Beams: Size such that beam stress does not exceed 25000 psi and maximum deflection does not exceed 1/240 of span.
3. Column Members: Size in accordance with manufacturer's recommended method.
4. Support Loads: Calculate using weight of pipes filled with water.
5. Maximum Spans:

    a. Steel and ductile iron pipe, 3 inch diameter and larger: 10 feetcenters, unless otherwise shown.
    b. Other pipelines and special situations: Same as noted in previous paragraphs. Supplementary hangers and supports may be required.

E. All vertical pipes shall be supported at each floor or at intervals of not more than 12 feet by approved pipe collars, clamps, brackets, or wall rests and at all points necessary to ensure rigid construction. All vertical pipes passing through pipe sleeves shall be secured using a pipe collar.

2.6 ANCHOR BOLTS/SYSTEMS

A. Anchoring Devices: Design, size, and space support anchoring devices, including anchor bolts, inserts, and other devices used to anchor support, to withstand shear, and pullout loads imposed by loading and spacing on each particular support. DO NOTE USE ADHESIVE ANCHOR BOLTS ON ANY PIPE SUPPORT HUNG FROM A ROOF OR CEILING, unless specifically noted otherwise.

B. All post-installed anchors in concrete shall have current published ICC-ES Evaluation Report indicating the anchor is approved for installation in cracked concrete.

C. The latest edition of the following specification and recommended practices shall become part of this specification as if written herein. Wherever requirements conflict, the more stringent shall govern.

1. ACI 318, Appendix D.
2. ACI 355.2, Mechanical Anchors “Qualification of Post-Installed Mechanical Anchors in Concrete”
3. Anchor manufacturer’s published installation requirements.

D. Expansion anchors:

1. The length of expansion bolts shall be sufficient to place the wedge portion of the bolt a minimum of 1 inch behind the steel reinforcement.
2. Manufacturers:
    a. Power-Stud+ SD4 and Power-Stud+ SD6 by Powers Fasteners, Brewster, NY,
    b. Kwik Bolt as manufactured by Hilti USA, Tulsa, Oklahoma; or
    c. Wej-it by Wej-it Expansion Products, Inc., Broomfield, Colorado.

E. Unless otherwise noted: use Type 304 stainless steel anchoring parts/bolts and hardware for non-submerged supports, Type 316 stainless steel for submerged anchors.

F. Size of anchor bolts as designed by manufacturer, 1/2 inch minimum diameter, or as shown on the Drawings.

G. Anchors to concrete in chemical areas shall be epoxy secured vinyl ester FRP all thread, insertion depth and size as required by the manufacturer for the design loads. Nuts, bolts and hardware shall all be vinyl ester FRP construction.

2.7 HANGER RODS

A. Where use of steel is allowed, hanger rods shall be hot-rolled steel, machine-threaded, and, except for stainless steel, galvanized after fabrication. The strength of the rod shall be based on its root diameter.

1. Hanger rods shall be attached to concrete structures using single or continuous concrete inserts by the named support manufacturers above. Where use of steel is allowed, inserts shall be malleable iron or steel with galvanized finish.
2. Beam-clamps, C-clamps, or welded-beam attachments shall be used for attaching hanger rods to structural steel members.

B. Minimum rod size for metallic rod hangers: (* For pipe diameters less than 14 inch, if using pipe roller, use 2 hanger rods with minimum diameter noted below for pipe's diameter).

	Nominal Pipe / Tube Diameter	Minimum Hanger Rod Diameter
1	Less than 2-1/2 inch	1/4 inch*
2	3 to 8 inches	1/2 inch
3	10 to 14 inches	3/4 inch*
4	16 to 20 inches	2 at 1 inch
5	24 inches	2 at 1-1/4 inch
6	30 inches	2 at 1-1/2 inch

2.8 SINGLE PIPE HANGERS

A. Unless otherwise indicated, pipe hangers and supports shall be standard catalogued components, conforming to the requirements of MSS-41, 58, or 69 and shall be of the following type:

1. Anvil International
2. Equal models by: Carpenter & Patterson, Inc., Wobum, MA; Cooper B-Line; Gulf State Manufacturing; or Unistrut Northeast, Cambridge, Massachusetts.

B. Single pipes shall be supported by hangers suspended by hanger rods from structural steel members, concrete ceilings, bottom of trapeze hangers, and wall-mounted steel angle brackets.

C. Where pipes are near walls, beams, columns, etc., and located an excessive distance from ceilings or underside of beams, welded steel wall brackets similar to Carpenter and Patterson, Figure Nos. 68, 79, 84, or 139 shall be used for hanging pipe. Where single pipes rest on top of bracket pipe supports, attachments shall meet requirements as specified under multiple pipe hangers.

2.9 MULTIPLE PIPE HANGERS

A. Suspended multiple pipes, running parallel in the same horizontal plane that are adjacent to each other, shall be suspended by trapeze type hangers or wall brackets. Where use of steel is allowed, trapeze hangers shall consist of galvanized structural steel channel supported from galvanized threaded rod or attached to concrete walls, columns, or structural steel support members. See previous paragraphs about multiple PVC pipe supports.

B. Except as otherwise specified herein, pipe anchors used for attaching pipe to trapeze or multiple pipe wall brackets shall be anchor or pipe chairs similar to:

1. Anvil Fig. 175.
2. Cooper B-Line B3147A or B3147B.
3. Where use of steel is allowed, material of construction shall be galvanized steel. Chair U bolts shall be tightened to allow freedom of movement for normal expansion and contraction except where pipe must be anchored to control direction of movement or act as a thrust anchor.

2.10 SINGLE PIPE SUPPORTS FROM BELOW

A. Single pipes located in a horizontal plane close to the floor shall be Pedestal type: Schedule 40 pipe stanchion, saddle, and anchoring flange.

1. Nonadjustable Saddle: MSS SP 58, Type 37 with U-Bolt

   a. Anvil, Figure 259.
   b. Cooper B-Line, Figure B3090.

2. Adjustable Saddle: MSS SP 58, Type 38 without clamp

   a. Anvil, Figure 264.
   b. Cooper B-Line, Figure B3093.

B. Pipes less than 3 inch in diameter:

1. Hold in position by supports fabricated from steel C channel, welded post base similar to Unistrut, Figure P2072A, where use of steel is allowed; and pipe clamps similar to Unistrut, Figures P1109 through 26.
2. Where required to assure adequate support, fabricate supports using two vertical members and post bases connected by horizontal member of sufficient load capacity to support pipe.
3. Fasten supports to nearby walls or other structural member to provide horizontal rigidity.
4. More than one pipe may be supported from a common fabricated support.

C. Pipes 3 inch in diameter and larger:

1. Support by adjustable stanchions.
2. Provide at least 4 inch adjustment
3. Flange mount to floor.

D. Use yoked saddles for piping whose centerline elevation is 18-inch or greater above the floor and for all exterior installations.

E. Pipe roller type supports shall be used where required to accommodate thermal movement in conjunction with axial supports.

2.11 WALL SUPPORTED SINGLE AND MULTIPLE PIPES

A. Single or multiple pipes located adjacent to walls, columns, or other structural members shall be supported using welded steel wall brackets, where use of steel is allowed, as manufactured by Carpenter and Patterson, Figure No. 69, 84, or 139.

B. Where noted, multiple pipes may be supported on C-channel with steel brackets similar to Unistrut pipe clamps; with pipe anchor chairs; or equal.

C. Individual pipes, up to 8-in diameter, where noted, may use MSS Type 8 pipe clamps as noted on the Drawings.

D. Securely fasten all members to wall, column, etc., using double-expansion shields or other method as approved by the Engineer. Provide additional wall bearing plates as required.

2.12 BASE ANCHOR SUPPORT

A. Bend Support: Where pipes change direction from horizontal to vertical via a bend, install a welded or cast base bend support to carry the load. Fasten to the floor, pipe stanchion, or concrete pedestal using expansion anchors or other method as approved by the Engineer.

B. Concrete Supports: Where indicated, securely fasten pipe bends to concrete supports with suitable metal bands as required and approved by the Engineer. Isolate piping from poured concrete with a neoprene insert.

2.13 VERTICAL PIPE SUPPORTS

A. Where vertical pipes are not supported by a Unistrut type system as specified, they shall be supported in one of the following methods.

1. For pipes 1/4 to 2 inch in diameter.
   a. Provide extension hanger ring with an extension rod and hanger flange.
   b. The rod diameter shall be as recommended by the manufacturer for the type of pipe to be supported.
   c. Where use of steel is allowed, the hanger ring shall be steel- or PVC-clad depending on the supported pipe material of construction. The hanger ring shall be equal to Carpenter & Patterson, Figure Nos. 81.

d. Where use of steel is allowed, the anchor flange shall be galvanized malleable iron similar to Carpenter and Patterson, Figure No. 85.

2. For pipes equal to or greater than 2 inch in diameter,

a. extended pipe clamps similar to Carpenter & Patterson, Figure No. 267 may be used.
b. Attach hanger to concrete structures using double expansion shields,
c. Attach hanger to metal support members using welding lugs similar to Carpenter & Patterson, Figure No. 114.

B. Pipe supports shall be provided for closely spaced vertical piping systems required to provide a rigid installation. The interval of vertical support spacing shall be as specified, but in no case shall vertical interval exceed 12 feet. The support system shall consist of a framework suitably anchored to floors, ceilings, or roofs.

C. Unless otherwise specified, shown, or specifically approved by the Engineer, vertical runs exceeding 12 feetshall be supported by base elbows/tees, clamps, brackets, wall rests, and pipe collars, all located as required to ensure a rigid installation.

D. Pipe riser clamps, per MSS SP58, shall be used to support all vertical pipes extending through floor slabs. Where use of steel is allowed, riser clamps shall be galvanized steel manufactured by:

1. Carpenter & Patterson, Figure No. 128.
2. Anvil, Figure 261.
3. Cooper B-Line, Figure B3373.
4. Or equal.

E. Copper-clad or PVC-coated clamps shall be used on copper pipes. Insulation shall be removed from insulated pipes prior to installing riser clamps. Insulation shall not be damaged by clamp installation.

2.14 SPECIAL SUPPORTS

A. Frame Work Supports:

1. Vertical and horizontal supporting members shall be U-shaped channels similar to Unistrut, Series P1000. Vertical piping shall be secured to the horizontal members by pipe clamps or pipe straps. See pipe clamp and strap requirements.
2. For piping 3 inch and smaller, framework shall be as manufactured by:

a. The Unistrut Corporation;
b. Power-Strut (or Ackinstrut where fiberglass systems are specified);
c. Multi-Strut by Carpenter-Paterson
d. Or equal.

3. For piping larger than 3 inch, the support frame shall be fabricated from structural stainless steel or steel shapes, depending upon the support location, and secured through the use of drop in, adhesive or expansion anchors.

4. The assemblies shall be furnished complete with all nuts, bolts, and fittings required for a complete assembly including end caps for all Unistrut members.
5. Electrical Conduit Support: Under Division 26.
6. The design of each individual framing system shall be the responsibility of the Contractor. Submit shop drawings, and show all details of the installation, including dimensions and types of supports. In all instances the completed frame shall be adequately braced to provide a complete rigid structure when all the piping has been attached. See also Article SUPPORT AND RESTRAINT.

B. Supports not otherwise described in this Section shall be fabricated or constructed from standard structural stainless steel or steel shapes in accordance with applicable provisions of Section 055000 "Metal Fabrications," or Unistrut-type frame; have anchor hardware similar to items previously specified herein; shall meet the minimum requirements listed below; and be subject to the approval of the Engineer.

C. Additional Pipe Support Situations

1. Supporting Multiple Chemical and Related Piping:

a. Location: indicated on Drawings or otherwise required, especially adjacent to chemical pumps.
b. Use: framework support.
c. Materials: FRP, with proper local stress protection.

2.15 SHOP FACTORY FINISHING

A. Prepare and prime metallic (except stainless steel) supports in accordance with Division 09.

2.16 ACCESSORIES

A. Insulation Shield: Install on insulated non-steel piping. Oversize the rollers and supports, as required. Manufacturers:

1. Anvil, Figure 167.
2. Cooper B-Line, Series B3151.

B. Welding Insulation Saddle: Install on insulated metal pipe. Oversize the rollers and supports, as required. Manufacturers:

1. Anvil, Figure 160.
2. Cooper B-Line, Series B3160.

C. Vibration Isolation Pad: Install under base flange of pedestal type pipe supports adjacent to equipment, and where required to isolate vibration.

1. Isolation pads to be neoprene, waffle type.
2. Manufacturers:

a. Mason Industries, Type W.
b. Korfund.

D. Dielectric Barrier

1. Install between carbon steel members and copper or stainless-steel pipe.
2. Install between stainless steel supports and non-stainless steel ferrous metal piping.
3. All stainless-steel piping shall be isolated from all ferrous materials, including galvanized steel by use of neoprene sheet material and protection shields.

E. Electrical Isolation: Install 1/4 by 3 inch neoprene rubber wrap between submerged metal pipe and oversized clamps.

PART 3 - EXECUTION

3.1 EXAMINATION

A. Verify field dimensions as indicated on Shop Drawings.

3.2 INSTALLATION

A. Obtain permission from Engineer before using powder-actuated anchors.

B. Obtain permission from Engineer before drilling or cutting structural members.

C. Inserts:

1. Install inserts for placement in concrete forms. Before setting inserts, all drawings and figures shall be checked that have a direct bearing on the pipe location. Responsibility for the proper location of pipe supports is included under this Section.
2. Install inserts for suspending hangers from reinforced concrete slabs and sides of reinforced concrete beams.
3. Provide hooked rod to concrete reinforcement section for inserts carrying pipe 4 in and larger.
4. Where concrete slabs form finished ceiling, locate inserts flush with slab surface.
5. Where inserts are omitted, drill through concrete slab from below and provide through-bolt with recessed square steel plate and nut flush with top of slab.

D. Pipe Hangers and Supports:

1. Install according to: ASME B31.3.
2. Support horizontal piping as indicated on Shop Drawings, depending upon pipe size.
3. Install hangers with minimum 1/2 in space between finished covering and adjacent Work.
4. Place hangers within 12 in of each horizontal elbow.
5. Use hangers with 1-1/2 in minimum vertical adjustment.
6. Support horizontal cast iron pipe adjacent to each hub, with 5 ft maximum spacing between hangers.
7. Support vertical piping at every floor. Support vertical cast iron pipe at each floor at hub.
8. Where piping is installed in parallel and at same elevation, provide multiple pipe or trapeze hangers.
9. Support riser piping independently of connected horizontal piping.
10. Provide copper-plated hangers and supports for copper piping.

11. Design hangers for pipe movement without disengagement of supported pipe.
12. Support piping independently so that equipment is not stressed by piping weight or expansion in piping system.
13. Support large or heavy valves, fittings, and appurtenances independently of connected piping.
14. Provide welded steel brackets where piping is to be run adjacent to building walls or columns.
15. Use beam clamps where piping is to be suspended from building steel.
16. Insulated Piping: Provide two bolted clamps designed to accommodate insulated piping.
17. Use offset clamps where pipes are indicated as offset from wall surfaces.
18. Proceed with installation of piping and supports only after any building structural work has been completed and new concrete has reached its 28-day compressive strength.
19. The installation of pipe support systems shall not interfere with the operation of any overhead bridge cranes, monorails, access hatches, etc. No piping shall be supported from stairs, other pipes, ladders, and walkways unless authorized by the Engineer.
20. Repair mounting surfaces to original condition after attachments are made.
21. Brace horizontal pipe movements by both longitudinal and lateral sway bracing.
22. Where supports are required in areas to receive chemical resistant seamless flooring, install supports prior to application of flooring system.

E. Insulation:

1. Provide clearance in hangers and from structure and other equipment for installation of insulation.
2. Conform to Section 404213 – Process Piping Insulation.

F. Equipment Bases and Supports:
1. Provide housekeeping pads as detailed on Drawings.
2. Using templates furnished with equipment, install anchor bolts and accessories for mounting and anchoring equipment.
3. Construct supports of steel members. Brace and fasten with flanges bolted to structure.
4. Provide rigid anchors for pipes after vibration isolation components are installed. Comply with Section 400513 “Common Work Results for Process Piping.”

G. Prime Coat:

1. Prime coat exposed steel hangers and supports.
2. Conform to Section 099000 “Painting and Coating.”
3. Hangers and supports located in crawl spaces, pipe shafts, and suspended ceiling spaces are not considered exposed.

3.3 FIELD QUALITY CONTROL

A. All pipe support systems shall be tested after installation in conjunction with the respective piping pressure tests. If any part of the pipe support system proves to be defective or inadequate, it shall be repaired, augmented or replaced to the satisfaction of the Engineer.

B. After the work is installed, but before it is filled for start-up and testing, the Support System Design Engineer shall inspect the work and shall certify its complete adequacy. Each system shall be inspected and certified in the same way.

C. Submit a report, including all field modifications and including all certificates.

1. Insert state where project is located.
2. The report shall bear the stamp of a professional engineer registered in Texas and shall be subject to the review of the Engineer.

END OF SECTION 400507

© 2023 CDM Smith
All Rights Reserved

SECTION 400519 - DUCTILE IRON PROCESS PIPE

PART 1 - GENERAL

1.1 RELATED DOCUMENTS

A. Drawings and general provisions of the Contract, including General and Supplementary Conditions and Division 01 Specification Sections, apply to this Section.

1.2 SUMMARY

A. Section Includes:

1. Ductile-iron pipe.
2. Ductile-iron, malleable-iron, and cast-iron fittings.
3. Accessories.

B. Related Requirements:

1. Division 09 for Shop Priming and Painting
2. Section 400506 "Couplings, Adapters, and Specials for Process Piping" for piping appurtenances.
3. Section 400507 "Hangers and Supports for Process Piping" for hangers, anchors, sleeves, and sealing of piping to adjacent structures.
4. Section 400551 "Common Requirements for Process Valves" for common product requirements for valves for placement by this Section.

1.3 COORDINATION

A. Coordinate Work of this Section with piping and equipment connections specified in other Sections and indicated on Drawings.

1.4 SUBMITTALS

A. Product Data: Submit manufacturer information regarding pipe and fittings.

B. Shop Drawings: Indicate layout of piping systems, including equipment, critical dimensions, sizes, and materials lists.

C. Manufacturer's Certificate: Prior to shipment of pipe, submit a certified affidavit of compliance from the pipe manufacturer stating that the pipe fittings, gaskets, linings and exterior coating for this project have been manufactured and tested in accordance with AWWA and ASTM standards and requirements specified herein.

D. Delegated Design Submittals: Submit signed and sealed Shop Drawings with design calculations and assumptions for pipe sizing methods and calculations used.

E. Source Quality-Control Submittals: Indicate results of factory tests and inspections.

F. Field Quality-Control Submittals: Indicate results of Contractor-furnished tests and inspections.

G. Qualifications Statements:

1. Submit qualifications for manufacturer, installer, and licensed professional.
2. Submit manufacturer's approval of installer.

1.5 CLOSEOUT SUBMITTALS

A. Project Record Documents: Record actual locations of piping, valves and other appurtenances, connections, and invert or centerline elevations.

B. Identify and describe unexpected variations to subsoil conditions or discovery of uncharted utilities.

1.6 WARRANTY

A. Provide Manufacture/Supplier warranty in accordance with CIP16, Warranty and Section 016000 “Product Requirements”.

1.7 QUALITY ASSURANCE

A. Hydrostatically test each length of ductile iron pipe at the point of manufacture to 500 psi for a duration of 10 seconds per AWWA C151. Furnish certified test results in duplicate to the Engineer prior to time of shipment.

B. Inspect and test by Manufacturer the ductile-iron pipe and fittings at the foundry as required by the AWWA C600, Hydrostatic Testing; ASTM A 716, Standard Specification for Ductile Iron Culvert Pipe; ASTM A746, Standard Specification for Ductile Iron Gravity Sewer Pipe as applicable. Furnish in duplicate to Engineer sworn certificates of such tests and their results prior to the shipment of the pipe.

C. Pipe and fittings to be installed under this Contract may be inspected for compliance with this Section by an independent testing laboratory selected by Owner, at Owner's expense.

D. Owner’s Representative will inspect the pipe and fittings after delivery. Products are subject to rejection at any time on account of failure to meet any of the specified requirements, even though accepted as satisfactory at the place of manufacture. Immediately mark pipe rejected after delivery and remove from the job site.

E. Permanently mark pipe and fittings with the following information:

1. Manufacturer name and trademark.
2. Manufacturing date.
3. Size, type, class, or wall thickness.
4. Production Standard (AWWA, ASTM, etc.).
5. Paint colors are specified under Division 09.

6. Apply pipe labelling per ASME A13.1-2015 Label Color Coding for Background and Lettering.

F. Perform Work according to City of Georgetown, TCEQ and manufacturer's standards.

1.8 QUALIFICATIONS

A. Manufacturer: Company specializing in manufacturing products specified in this Section with minimum five years' documented experience.

B. Installer: Company specializing in performing Work of this Section with minimum five years' documented experience.

C. Licensed Professional: Professional engineer experienced in design of specified Work and licensed in State of Texas.

1.9 DELIVERY, STORAGE, AND HANDLING

A. Inspection: Accept materials on Site in manufacturer's original packaging and inspect for damage. Photograph and provide written documentation of damaged materials.

B. Store materials according to manufacturer instructions.

C. Protection:

1. Protect materials from moisture and dust by storing in clean, dry location remote from construction operations areas.
2. Coverall openings to prevent entrance of dirt, water, and debris.
3. Protect piping and appurtenances by storing off ground.
4. Limit stacking height to manufacturers specified maximum.
5. Provide additional protection according to manufacturer instructions.

1.10 EXISTING CONDITIONS

A. Field Measurements:

1. Verify field measurements prior to fabrication.
2. Indicate field measurements on Shop Drawings.

PART 2 - PRODUCTS

2.1 DUCTILE IRON PIPE AND FITTINGS

A. Piping:

1. Comply with AWWA C115, C150, or C151 as applicable for service.

2. Ductile Iron pipe as manufactured by U.S. Pipe and Foundry Company, Inc.; American Cast Iron Pipe Company; all divisions of the McWane Company or an approved equal who is a member of the Ductile Iron Pipe Research Association (DIPRA).
3. Pressure Rating:

Pipe Diameter	Minimum Pressure Rating (psi)
4-inch to 12-inch	350
14-inch and larger	250

B. Fittings:

1. Material: AWWA C110, ductile iron or AWWA C153, ductile iron.

   a. Working Pressure: As indicated in the Pipe Schedule on Drawings.
   b. Maximum Process Fluid Temperature: As indicated on the Pipe Schedule on Drawings.
   c. Fitting type: As indicated on the Pipe Schedule on Drawings.

2. Mechanical Joints (for buried piping): Refer to Section W1-Ductile Iron Pipe and Fittings.
3. Restrained Joints: Comply with AWWA C111.
4. Flanged Fittings (for above grade piping): Comply with AWWA C115/A21.15.

   a. Assembly Bolts: Square headed carbon steel machine bolts with hexagon nuts per ANSI B18.2. Stainless steel parts shall be used in all submerged or corrosive conditions. Threads conform to ANSI B1.1. Bolt length: 1/8 to 5/8-inch protrusion from nut after torqueing.
   b. Steel flanges in conformance with AWWA C207, Class D, may be mated to iron valves, fittings, or other parts having either integral Class 125 iron flanges or screwed Class 125 companion flanges. When such construction is used, the raised face on mating flanges shall be removed.

5. Grooved Joints: Comply with AWWA C606:

   a. Rigid Couplings: Style 31 couplings as manufactured by Victaulic, Anvil International, or equal.
   b. For direct connection of ductile pipe to steel pipe of IPS sizes: Victaulic Style 307 transition coupling with offsetting, angle-pattern, bolt pads.
   c. Grooved end fittings for AWWA ductile iron pipe: Conform to ANSI A21.10/AWWA C110 for center-to-end dimensions and ANSI A21.10/AWWA C110 or AWWA C153 for wall thickness, with AWWA C606 grooved ends.

6. Sleeve Type Couplings: Dresser Style 38 or 138 as manufactured by Dresser Industries, or equivalent products of Smith-Blair, Romac Industries, Ford Meter Box Co, or equal.
7. Flanged Coupling Adaptors: Smith-Blair Type 913, or equivalent products of Klamflex Pipe Couplings (PTY) LTD, Robar Industries LTD, or equal.
8. Welded-on outlets and bosses are not allowed unless approved by Engineer.

C. Cement-Mortar Lining:

1. Larger than 24-inch diameter: Comply with AWWA C104.

2. Thickness: Double.
3. NSF Complaint.
4. Pipe and fittings 4-inch through 24-inch diameter shall be cement-mortar lined in accordance with AWWA C104 or fusion bonded epoxy coated per AWWA C116.

D. Exterior Coating:

1. Exposed Service: As specified in Division 09.
2. If required, coatings "hold-backs" to be provided at pipe and fitting ends for satisfactory installation for joint connections in the field.
3. Provide necessary coating materials to perform field coating applications at joints compatible with or equal to the shop applied material.
4. Field repair of pipe with damaged coating shall receive prior approval of Engineer. If, in the opinion of Engineer coating damage is beyond repair, pipe to be replaced at the expense of Contractor.
5. Flange bearing surfaces shall be uncoated.
6. Mechanically clean or brush blast all surfaces to have exterior coating applied to ductile iron surfaces. Chemical cleaning or wiping with solvent is not acceptable.

2.2 ACCESSORIES

A. Thermal Insulation:

1. As indicated on Drawings.

B. Gaskets:

1. Full face type per AWWA C111 to provide positive sealing for flanged ductile iron joints.
2. Thickness 1/8-inch.

C. Base bends and base tees shall have machined and drilled bases.

D. Filler flanges and beveled filler flanges shall be provided as required. Filler flanges and beveled filler flanges shall be furnished faced and drilled complete with extra length bolts. Filler flanges shall be equal to Clow Figure F 1984 and beveled filler flanges shall be equal to Clow Figure F 1986.

2.3 SOURCE QUALITY CONTROL

A. Provide shop inspection and testing of completed assembly. See Section 400551 for pipe testing requirements.

B. Certificate of Compliance:

1. If manufacturer is approved by authorities having jurisdiction, submit certificate of compliance indicating Work performed at manufacturer's facility conforms to Contract Documents.

PART 3 - EXECUTION

3.1 EXAMINATION

A. Verify that field dimensions are as indicated on Drawings.

B. Inspect existing flanges for nonstandard bolt hole configurations or design and verify that new pipe and flange mate properly.

3.2 PREPARATION

A. Thoroughly clean pipe and fittings before installation.

B. Surface Preparation:

1. Clean surfaces to remove loose rust, mill scale, and other foreign substances by power wire brushing.
2. Touch up shop-primed surfaces with primer as specified in Section 099100 “Painting.”
3. Solvent-clean surfaces that are not shop primed.

3.3 INSTALLATION

A. Buried Service Piping: As specified in Section W1 Ductile Iron Pipe and Fittings.

B. Exposed Service Piping:

1. According to ASME B31.3.
2. In compliance with manufacturer’s instructions.
3. Run piping straight along alignment as indicated on Drawings, with minimum number of joints.
4. Clean each length prior to installation.
5. Support per Section 400507 “Hangers and Supports for Process Piping.”
6. Do not use equipment flanges for support, support pipe separately.

C. Fittings:

1. According to manufacturer instructions.
2. Clean gasket seats thoroughly, and wipe gaskets clean prior to installation.
3. Tighten bolts progressively, drawing up bolts on opposite sides until bolts are uniformly tight; use torque wrench to tighten bolts to manufacturer instructions.
4. Flanged joints to be made using gaskets, bolts, bolt studs with a nut on each end, or studs with nuts where the flange is tapped. The number and size of bolts to conform to the same ANSI Standard as the flanges. Bolts shall be ASTM A307, grade B, heavy hex nut.
5. Provide bolt torque calculations demonstrating that the supplied gasket will seat within the stress requirements of the supplied bolt.
6. Provide required upstream and downstream clearances from devices as indicated on Drawings.

D. Make taps to ductile iron piping only with service saddle, tapping boss of a fitting or valve body, or equipment casting.

E. Install piping with sufficient slopes for venting or draining liquids and condensate to low points.

F. Support exposed piping as specified in Section 400507 “Hangers and Supports for Process Piping.”

G. Provide expansion joints as specified in Section 400506 “Couplings, Adapters, and Specials for Process Piping,” and pipe guides as specified in Section 400507 “Hangers and Supports for Process Piping,” to compensate for pipe expansion due to temperature differences.

H. Dielectric Fittings: Provide between dissimilar metals.

I. Field Cuts: According to pipe manufacturer instructions. Cutting by abrasive saw only, leaving a smooth cut at right angles to the axis of the pipe. Damage to the lining repaired to the satisfaction of the Engineer. Seal Field cut ends approved epoxy coating in accordance with manufacturer's instructions.

J. Finish primed surfaces according to Section 099100 “Painting.”

K. Installation Standards: Install Work according to City of Georgetown standards.

3.4 TOLERANCES

A. Laying Tolerance: As specified in Section W1 Ductile Iron Pipe and Fittings.

B. Deflection at joints not to exceed that recommended by the pipe manufacturer.

C. Supply and install fittings, in addition to those shown on Drawings, in areas where conflict exists with existing facilities.

3.5 FIELD QUALITY CONTROL

A. Inspection:

1. Inspect for damage to pipe lining or coating and for other defects that may be detrimental as determined by Engineer.
2. Repair damaged piping or provide new, undamaged pipe at no additional cost to the project.
3. After installation, inspect for proper supports and interferences.

B. Pressure Testing: Refer to 400551 “Common Requirements for Process Valves and Piping” and CIP 12.

C. Test Report Documentation:

1. Test date.
2. Description and identification of piping tested.
3. Test fluid and flow rates.

4. Test pressure.
5. Remarks, including:

    a. Leaks (type, location).
    b. Repair/replacement performed to remedy excessive leakage.

6. Signed by Contractor and Engineer to represent that test has been satisfactorily completed.

3.6 CLEANING

A. Keep pipe interior clean as installation progresses.

B. After installation, clean pipe interior of soil, grit, and other debris.

END OF SECTION 400519

© 2023 CDM Smith
All Rights Reserved

EXHIBIT B
Use as a reference

GASKET MATERIALS USED FOR DUCTILE IRON PIPE IN SEWERAGE SERVICE

Description:	Maximum. Service Temperature (Degree F): [1] [2]		Common Uses: [3]
Push-on:	Mechanical Gaskets:	Joint Gaskets:	
SBR (Styrene Butadiene)	150 Degrees	120 Degrees	Fresh Water Salt Water Sanitary Sewage
EPDM (Ethylene Propylene Diene Monomer)	250 Degrees	225 Degrees	Fresh Water Salt Water Sanitary Sewage Hot Water
Nitrile (NBR) (Acrylonitrile Butadiene)	150 Degrees	120 Degrees	Hydrocarbons Fats Oils Greases Chemicals
Neoprene (R) (CR) (Polychloroprene)	200 Degrees	200 Degrees	Fresh Water Salt Water Sanitary Sewage
Viton (R); Fluorel (R) (FPM) [4] (Fluorocarbon)	300 Degrees	225 Degrees	Hydrocarbons Acids Petroleum Vegetable Oils

[1] Maximum service temperatures listed are intended as general guidelines for ductile iron pipe gaskets. For service temperatures greater than those listed, consult manufacturers for specific recommendations.

[2] Minimum service temperature is not usually a meaningful parameter for piping gaskets; however, low temperatures during pipeline installation may necessitate precautions. Consult manufacturer for pertinent recommendations.

[3] Water, including sanitary sewage, with low levels of the listed contaminants.

[4] Consult manufacturer for availability of FPM push-on gaskets.

END OF EXHIBIT B

© 2023 CDM Smith
All Rights Reserved

This page intentionally left blank.

© 2023 CDM Smith
All Rights Reserved

SECTION 400551 - COMMON REQUIREMENTS FOR PROCESS VALVES AND PIPING

PART 1 - GENERAL

1.1 RELATED DOCUMENTS

A. Drawings and general provisions of the Contract, including General and Supplementary Conditions and Division 01 Specification Sections, apply to this Section.

1.2 SUMMARY

A. Section Includes:

1. Common requirements for valves.
2. Common requirements for valve actuators.
3. Valve tags.
4. Valve schedule.
5. Pipe testing.

B. Related Requirements:

1. Section 033000 “Cast-in-Place Concrete” for execution requirements for placement of concrete as required by this Section.
2. Section 055000 “Metal Fabrications” for miscellaneous metalwork and fasteners specified by this Section.
3. Division 09 for product and execution requirements for priming and painting specified by this Section.
4. Division 22 for plumbing valves as required by Project.
5. Section 400507 “Hangers and Supports for Process Piping” for product and execution requirements for valve supports specified by this Section.
6. Section 400557 “Actuators for Process Valves and Gates.”
7. Section 400593.23 “Low-Voltage Motor Requirements for Process Equipment” for single- and three-phase motor requirements for equipment specified in this Section.
8. Section 404213 “Process Piping Insulation” for valve insulation as required by this Section.

1.3 COORDINATION

A. Coordinate Work of this Section with individual process valve specifications.

1.4 ACTION SUBMITTALS

A. Section CIP 10 “Submittals” and 013300 “Submittal Procedures” for submittal requirements.

B. For Process Valves:

1. Valve Schedule:

    a. Submit valve schedule populated with all Division 40 process valves specified for this project. Include all information shown on the Sample Valve Schedule included in this project.
    b. Approval of valve schedule submittal to precede all individual valve submittals. All subsequent individual valve submittals to include the approved valve tag number or group on the submittal cover sheet.

2. Power Actuator Data:

    a. Sizing Calculations:

        1) Provide fluid pressure and velocity sizing basis.
        2) Provide maximum valve torque based on disc shape and flow direction.
        3) Clearly indicate safety factors and mechanical ratios of any intermediate gearing.

    b. Maximum output torque of actuator and intermediate gearing.
    c. Details of actuator mounting, including orientation of actuator and intermediate gearing.
    d. Dimensional drawing of actuator assembled on valve.
    e. Pneumatic/Hydraulic pressure requirements, electrical power supply, plumbing connection sizes and locations.
    f. Wiring diagram, control wiring and protocol of actuator and intermediate gearings of gearbox.
    g. Valve cavitation limits for positioning, modulating and control valves mated to power actuator.

3. Shop Drawings: Valve and actuator model number and size, valve parts list, materials of each part including material standard designation (ASTM or other), position indicators, limit switches, actuator mounting.
4. Provide certified hydrostatic test data, per manufacturer's standard procedure or MSS-SP-61 for all valves.

C. For Process Piping:

1. Product Data: Submit manufacturer’s catalog literature for each specified product.
2. Shop Drawings:

    a. Piping layouts in full detail, including dimensioning and actual lengths for elevations.
    b. Location and type of restraint to prevent joint separation.
    c. Details of wall penetrations and fabricated.
    d. Location of pipe hangers and supports.
    e. Location, schedule, and information, including catalog cuts, on all items including pipe, valves, supports, joints, anchorage, guides, couplings, harnesses or other restraint, seismic, expansion joints, gaskets, fasteners, and other appurtenances.
    f. Information on coatings and linings and proposed method for application and repair.
    g. Samples.

h. Design Data.
i. Indicate list of wording, symbols, letter size, spacing of labels, and color-coding for mechanical identification and valve chart and schedule.
j. Indicate valve tag number, location, function, and valve manufacturer's name and model number.

3. Manufacturer's Certificate: Certify that products meet or exceed specified requirements.
4. Manufacturer Instructions: Submit detailed instructions on installation requirements, including storage and handling procedures.
5. Quality Control Submittals:

a. Manufacturer/Supplier qualifications and experience.
b. Field Test Plan and Reports:

1) Ten copies of certified shop tests showing compliance with appropriate standard.
2) Ten copies of all field test reports, signed by Contractor and Engineer.

c. Certificates:

1) Copies of certification for all welders performing work in accordance with ANSI B31.1 and ASME Section IX for shop and project site welding of pipework.
2) Certificates that all items comply with requirements of referenced standards for manufacturing, testing, and installation.
3) Submit certificates of materials compatibility and information to show that the materials being provided (including gaskets, linings, and coatings) are recommended for use in the services noted and for the environment where installed. In some cases, certain materials are specified for certain items and or services; if the manufacturer does not recommend these specified materials for the service or environment where they are to be used, then the manufacturer of the item shall provide the proper materials as required, at no additional costs to the Owner.

d. Manufacturer/Suppler Installation (or Application) Instructions.
e. Manufacturer/Supplier Field Report.

6. Project Record Documents.
7. Submit operation and maintenance data and manuals in accordance with Section 017823 "Operation and Maintenance Data."
8. Submit Warranties in accordance with CIP 16 and 017700 "Closeout Procedures".

D. For Pipe Testing:

1. Testing Plan: submit at least 5 working days prior to testing and include at least the information that follows:

a. Testing dates.
b. Piping systems and section(s) to be tested.
c. Test type, method, equipment, fluid, and disposal methods.
d. Method of isolation.

e. Calculation of maximum allowable leakage for piping section(s) to be tested.
f. Certifications of Calibration for testing equipment.

2. Test Records:

a. Test records shall include:

1) Date of Testing.
2) Identification of Piping Tested.
3) Test Fluid.
4) Test Pressure.
5) Signatures of Contractor and Engineer.

b. If leaks are found, they shall be noted on the record and corrected/repaired. After correction, retesting shall occur as specified for original test at no additional cost to Owner.
c. Test Records shall be maintained by Contractor and ten copies shall be submitted to Engineer within 3 working days of successful completion of testing.

1.5 DELEGATED DESIGN SUBMITTALS

A. Submit signed and sealed Shop Drawings with design calculations and assumptions for sizing of control valves and process piping.

1.6 INFORMATIONAL SUBMITTALS

A. Manufacturer Instructions: Submit operation instructions for each component including valve, actuator, gearbox, and any included instrumentation.

B. Source Quality-Control Submittals: Indicate results of integrators facility tests and manufacturers factory tests and inspections.

C. Field Quality-Control Submittals: Indicate results of Contractor-furnished tests and inspections.

D. Manufacturer Certification of Installation: Certify that equipment has been installed according to manufacturer instructions.

E. Qualifications Statement:

1. Submit qualifications for manufacturer and licensed professional.

1.7 CLOSEOUT SUBMITTALS

A. Submit actual locations and elevations of valves and actuators.

1.8 QUALITY ASSURANCE

A. For Process Valves:

1. Maintain clearances as indicated on Drawings and Shop Drawings.
2. Ensure that materials of construction of wetted parts are compatible with process liquid.
3. Mate valves to actuators at manufacturer's or integrator's facility. Fully test assembled product and certify ready for installation prior to shipment to the job site.

    a. Only in special cases for extremely large assemblies where installation requires disassembly, may actuators be mounted to the valves in the field.

4. Furnish affidavit of compliance with testing and manufacturing standards referred in this specification and the individual valve specifications.
5. Provide the services of a qualified and factory-trained service representative of the manufacturer to provide installation inspection and check out, and operational and maintenance instruction, for each type of the following equipment for the following durations:

Equipment	Valve Sizes	Installation Inspection	O and M Instruction
Assist in the Installation of electric motor operators and manually operated valves	N/A	4 day, 8 hr.	1 day, 8 hr.

6. Obtain Manufacturer's Certification of Proper Installation for Specified valves and valve assemblies.

B. For Process Piping:

1. All materials shall be new and unused; standard products, modified as required. All items of one type shall be supplied by a single supplier.
2. Install piping to meet requirements of all governing codes and regulations.
3. Provide manufacturer's certification that materials meet or exceed minimum requirements as specified and other submittal requirements.
4. Coordinate dimensions, materials, all connections, and drilling of flanges with connections and flanges for valves, pumps, and other equipment to be installed in or connected to piping systems. Bolt holes in flanges are to straddle vertical centerline.
5. Reject and remove from the Site, materials contaminated with gasoline, lubricating oil, liquid or gaseous fuel, aromatic compounds, paint solvent, paint thinner, acid solder, or other contaminants.
6. Gaskets, pipe-joint compound, and similar materials used for joining pipe carrying flammable or toxic gas, and where otherwise specified, must bear approval of Underwriters Laboratories Inc. (UL) or Factory Mutual Engineering Division (FM).
7. Contractor is responsible for insuring compatibility of all joints, between all pipe, fittings, and accessories, including furnishing and installing the proper adapters and couplings (restrained where required) at no additional cost to the Owner. Compatibility responsibility includes material and pressure compatibility with chemicals and conditions of service.
8. Inspection and Testing:

    a. Pay for testing and quality control required by referenced standards and/or these Contract Documents, unless noted.
    b. Pipe shall be inspected and tested at the place of manufacture as required by the standard specifications to which the material is manufactured.

c. Pipe may be inspected at place of manufacture for compliance with these specifications by an independent testing laboratory selected by Owner, at Owner's expense.
d. Inspection of the pipe and fittings will also be made by Engineer or other representative of Owner after delivery.

9. Pipe shall be subject to rejection at any time on account of failure to meet any of the specification requirements, even though sample pipes may have been accepted as satisfactory at the place of manufacture. Pipe rejected after delivery shall be marked for identification and shall be removed from the Work.
10. Piping Color Scheme and Lettering Size: Comply with ASME A13.1.
11. Perform Work according to City of Georgetown standards.

1.9 QUALIFICATIONS

A. Manufacturer: Company specializing in manufacturing valves and actuators with minimum five years' documented experience.

B. Licensed Professional: Professional engineer experienced in design of specified Work and licensed in State of Texas.

1.10 DELIVERY, STORAGE, AND HANDLING

A. General:

1. Inspection: Accept materials on Site in manufacturer's original packaging and inspect for damage.
2. Deliver factory mated power actuated valves on rigid wooden skids, fully braced and strapped to prevent damage to valve, actuator or coupling system.
3. Store materials according to manufacturer instructions.
4. Protection:

a. Protect materials from moisture and dust by storing in clean, dry location remote from construction operations areas.
b. Protect valve ends from entry of foreign materials by providing temporary covers and plugs.
c. Provide additional protection according to manufacturer instructions.

5. During loading, transportation, unloading, storage, and other handling, prevent damage to all pipes, joints, coatings, and linings. Carefully load and unload each pipe under control at all times. Under no circumstances shall the pipes be dropped or skidded against each other. Special wide cushioned slings, hooks, or pipe tongs shall be padded and used in such a manner as to prevent damage to the exterior surface or internal lining of the pipe. No uncushioned ropes, chains, wedges or levers shall be used in handling the pipe, fittings and couplings unless methods are approved by Engineer. Place skids or blocks under each item in the shop and securely wedge items during transportation and storage. Pipes and fittings shall be examined before installation and no piece shall be installed which is found to be defective.
6. Protect all items, linings, and coatings from direct sunlight and effects of weather.

7. Materials, if stored, shall be kept safe from damage. The interior of all pipe fittings and other appurtenances shall be kept free from dirt or foreign matter at all times. Note special requirements for protection of pipe lining and coatings and plastic pipe.
8. Pipe shall not be stacked higher than the limits recommended by its manufacturer. The bottom tier shall be kept off the supporting surface on properly padded supports. Pipe in tiers shall be alternated, with proper supports and chocks between tiers. At least two rows of 4-inch by 4-inch timbers shall be placed between tiers with chocks affixed to each end in order to prevent movement.
9. Gaskets: Stored in a cool place away from direct sunlight; not in contact with petroleum or other deteriorating products.
10. Delivery, storage, stacking, and handling shall be in accordance with the pipe manufacturer's instructions unless more stringent requirements are in these Contract Documents.
11. Use internal pipe bracing ("spiders") as required.
12. If any defective pipe is discovered after it has been installed it shall be removed and replaced with a sound pipe. Pipe and fittings shall be thoroughly cleaned before installation and shall be kept clean until they are put in service.

1.11 EXISTING CONDITIONS

A. Field Measurements:

1. Verify field measurements prior to materials ordering or any fabrication.
2. Indicate field measurements on Shop Drawings.

1.12 WARRANTY

A. Section CIP10 and Section 017700 “Closeout Procedures”: Requirements for warranties.

PART 2 - PRODUCTS

2.1 VALVES

A. General:

1. The use of a manufacturer's name and/or model or catalog number is for the purpose of establishing the standard of quality and general configuration desired.
2. Valves and appurtenances shall be of the size shown on Drawings and in Valve Schedule. In the case of conflict, the size shown on Drawings shall control. All valves of the same design and configuration shall be the manufactured product of one manufacturer. Valves shall be suitable for the intended service. Supplied spare parts (including discs, packing, seals, etc.) shall not be of a lower quality than that specified.
3. Valves and appurtenances shall have the name of the manufacturer, nominal size, flow directional arrows, working pressure for which they are designed and standard reference, cast in raised letters or indelibly marked upon a clearly visible exterior surface.

4. Unless otherwise noted, valves and appurtenances shall have a minimum working pressure of 150 psi or be of the same working pressure as the pipe they connect to, whichever is higher.
5. Valve joints or end connections shall be of the same type, nominal diameter, and pressure rating as the pipe or fittings they are connected to.
6. Unless otherwise noted, valves 2-1/2-inch in size or less shall have threaded end connections and valves 3-inch in size or larger shall have flanged end connections.
7. Provide all special adaptors as required to ensure compatibility between valves, appurtenances and adjacent pipe.
8. Valves and associated gearboxes located out-of-doors in a flood zone area or within 2-feet of a liquid surface or in vaults below grade or where otherwise noted, shall be designed for submerged service. All other valves and gearboxes shall be designed for weathertight service.

B. Description: Valves, operator, actuator, handwheel, chainwheel, extension stem, floor stand, worm and gear operator, operating nut, chain, wrench, and other accessories as required.

C. Valves of the same type shall be the product of one manufacturer.

D. Valve Ends: Compatible with adjacent piping system and as indicated on valve schedule.

E. Operation:

1. Close by turning clockwise.
2. Cast directional arrow on valve or actuator with OPEN and CLOSE cast on valve in appropriate location.

F. Valve Marking and Labeling:

1. Marking: Comply with MSS SP-25.
2. As indicated in valve schedule.
3. Labeling (valve tags):

a. Fiberglass reinforced plastic, ASTM D709, 70 mil thick, 2 1/2-inch diameter or 2 1/2-inch by 1 1/4-inch.
b. Lettering 1/16-inch thick of silk screening or other permanent embedment of subsurface printed graphics, permanently sealed.
c. Colors of lettering and backing as selected by Owner.
d. Two, 1/4-inch clear openings, Type 316 stainless steel grommets at each end, center of hole 3/8-inch from tag edge.
e. Cable and Splice Hardware: 3/32-inch Type 316 stainless steel.

G. Valve Construction: As Specified in Valve Sections.

H. Van Stone flanges shall not be used with pinch valves, industrial butterfly valves; elastomer bellows style expansion joints or other piping system components having an elastomer liner (rubber seat) that is used as a gasket.

2.2 VALVE ACTUATORS

A. Provide actuators in accordance with the valve schedule included herein**.**

B. Provide mechanical position indicators for power actuated and gearbox actuated valves.

C. Comply with AWWA C541 (Pneumatic and Hydraulic actuators) and C542 (Electric Motor Actuators) as applicable.

D. Provide chain actuators for shutoff valves mounted greater than 7 feet above floor level.

E. Gear and Power actuators as specified in Section 400557 "Actuators for Process Valves and Gates."

2.3 PROCESS VALVE INSULATION

A. Insulate valves installed in insulated piping systems as part of the Work.

B. As specified in Section 404213 "Process Piping Insulation."

2.4 PROCESS VALVE FINISHES

A. Valve Coating: Comply with AWWA C550.

B. Factory finishes are included in individual valve sections.

C. Exposed Valves: As specified in Section Division 09.

D. Stainless Body Valves: Do not coat.

E. Do not coat flange faces of valves unless otherwise specified.

2.5 PROCESS PIPING SHOP SURFACE PREPARATION AND COATINGS

A. Piping systems (pipe, fittings, valves, and other components) exposed to view shall have the surface of all components shop prepared and shop prime painted as specified in individual specification, or, if not otherwise indicated, as required in Division 09. This work is part of the work under the individual pipe system components' specifications.

2.6 PROCESS PIPING SHOP WELDING

A. Shop welding of fabrications shall be done according to the procedures and by welders certified per ASME Section IX. Welds shall be by an inert gas shielding process using only extra low carbon filler metals. Welds shall have a bead height of no more than 1/16-inch. Butt welds shall have 100 percent penetration to the interior or backside of the weld joint. Cross-sectional thickness of welds shall be equal or greater than that of the parent metal.

2.7 PROCESS PIPING PRESSURE TESTING

A. Test Fluids:

1. Hydrostatic Test Water should be used as the test fluid whenever possible. In those systems where water cannot be used, the test fluid may be either the one to be used in the system or the one agreed upon by 0 Engineer and 0 Contractor.
2. Service Pressure Test Fluid for which the system is designed shall be the test fluid.
3. Pneumatic Test Compressed air shall normally be used. Other gases may be used when specified or directed by Engineer. Test pressures shall be 110 percent of the anticipated maximum operating pressure, but not exceeding 100 psig, and not less than 5 psig at the highest point in the system.
4. Freon Test Freon gas blended with compressed air or nitrogen.

B. Test Equipment Required:

1. Hydrostatic Test:

   a. Water: Of sufficient capacity to deliver the required test pressure.
   b. Strainer: On inlet side of the pump to prevent foreign matter from entering the system.
   c. Valves: Shall be provided on the suction and discharge side of the pump (or other equipment).
   d. Heater: To allow heating of the test fluid when elevated temperatures are required for test.
   e. Relief Valve: Set at a pressure to relieve at 20 to 25 percent above the required test pressure.
   f. Pressure Gauges: Provide gauges capable of reaching 50 percent over the test pressure with shut-off valves located at test equipment inlet and discharge. These shall be located at the pump discharge and any other place deemed necessary by Contractor and Engineer for testing purposes.
   g. Pressure gauges and relief valves shall be checked for accuracy and recalibrated if necessary before use in test procedures.
   h. Vents, etc., to vent air from the pipes while filling for testing.

2. Pneumatic Test:

   a. Building supply air to deliver the required test pressure if available, or Contractor shall provide a compressor capable of the required test pressure.
   b. Valves and strainers shall be provided on the discharge side of the compressor.
   c. Relief valve to relieve at 10 percent over the test pressure.
   d. Provide pressure gauges with shutoff valves, capable of reaching 50 percent over test pressure. A gauge shall be located on the compressor discharge, on the pipe being tested, and other location as required.
   e. Check all items for accuracy and proper operation prior to starting tests.

3. Freon Test:

   a. Freon Gas Cylinder.
   b. Source of oil free compressed air, or, when specified, nitrogen gas.
   c. Pressure Gauges capable of reaching 50 percent over the test pressure.

d. Freon Leak Detector.

4. For Pipe Joint Testing:

a. The basic equipment used shall consist of a joint testing device, such as a vacuum box and test monitoring equipment. The proper vacuum or pressure system shall be provided. See also AWWA C206.
b. Vacuum or pressure data shall be transmitted electrically and without the use of the test medium or hoses. All test monitoring shall be aboveground and in a location that will allow for observation of test monitoring equipment by the Engineer.
c. Relief Valve: Set at a pressure to relieve at 5 to 10 percent above/below the required test pressure/vacuum, but at pressure/vacuum to keep from overstressing any pipe system component.
d. Vacuum/Pressure Gauges: Capable of reaching 50 percent over/under the test pressure. These should have shutoff valves and be located at the equipment inlet and discharge and adjacent to the area of testing and other places deemed necessary.
e. Check items for accuracy and proper operation before use in test procedures.

2.8 SOURCE QUALITY CONTROL

A. Testing: Test valves according to manufacturer's standard testing protocol, including hydrostatic, seal, and performance testing.

B. Certificate of Compliance:

1. If manufacturer is approved by authorities having jurisdiction, submit certificate of compliance indicating Work performed at manufacturer's facility conforms to Contract Documents.
2. Specified shop tests are not required for Work performed by approved manufacturer.

PART 3 - EXECUTION

3.1 FOR PROCESS VALVES

A. Examination:

1. Verify that piping system is ready for valve installation.
2. Fully examine valves for debris, damage, and interior finish blemishes prior to installation. Do not install valves with soiled interior or any visible damage to seats, discs, or interior finish.
3. Identify any piping, plant, or equipment clearance issues prior to installation, bring to Engineer’s attention via job meetings, submittal process or request for information process.

B. Installation:

1. Install valves, actuators, extensions, valve boxes, and accessories according to manufacturer instructions.
2. Inspect valve interiors before line closure for the presence of debris. At the option of the Engineer, internal inspection of valve and appurtenances may be required any time that the likelihood of debris is a possibility. Clean connecting pipes prior to installation, testing, disinfection, and final acceptance.
3. Rigidly support valves to avoid stresses on piping.
4. Coat studs, bolts and nuts with anti-seizing lubricant.
5. Dielectric Fittings: Provide between dissimilar metals.
6. Clean field welds of slag and splatter to provide a smooth surface.
7. Mate, adjust and fully test gearboxes, electric, hydraulic and pneumatic actuators to valves at manufacturer's or integrator's facility.

    a. Only in special cases for extremely large assemblies where installation requires disassembly may actuators be mounted to the valves in the field. These circumstances require preinstallation meetings.

8. In no case shall stems be installed vertically downward.
9. Unless otherwise indicated on Drawings:

    a. Install Gate, Globe, Ball valves with stem vertical in the 12 o'clock position.
    b. Install Plug valves with stem horizontal and plug opening to the top of the body unless position will not allow proper actuator access, in which case stem may be vertical in the 12 o'clock position.
    c. Install Butterfly valves 12 inch and smaller with stem horizontal or vertical in the 12 o'clock position,
    d. Install Butterfly valves 14 inch and larger with the stem horizontal unless position will not allow proper actuator access, in which case stem may be vertical in the 12 o'clock position.
    e. Install Control valves in horizontal pipelines with top works vertically upward.

10. Install brackets, extension rods, guides, the various types of operators and appurtenances as indicated. Before properly setting these items, check all drawings and figures which have a direct bearing on their location.
11. Inspect all materials for defects in construction and materials. Clean debris and foreign material out of openings, etc. Valve flange covers shall remain in place until connected piping is in place. Verify operability of all operating mechanisms for proper functioning. Check all nuts and bolts for tightness. Repaired or replace valves and other equipment which do not operate easily or are otherwise defective.
12. Where installation is covered by a referenced standard, installation shall be in accordance with that standard, except as herein modified, and Contractor shall certify such. Also note additional requirements in other parts of this Section.
13. Unless otherwise noted, joints for valves and appurtenances shall be made up utilizing the same procedures as specified under the applicable type connecting pipe joint. Install valves and other items as recommended by the manufacturer. Verify manufacturers' torqueing requirements for all valves.
14. Coordinate direction of flow through offset type and shaped butterfly valve discs with the mated actuator torque capacity.
15. Rotate valve operators and indicators to display toward normal operation locations. Consult with Engineer prior to installing valves with handwheels to confirm final position of handwheel.

16. Vertically center floor boxes, valve boxes, extension stems, and low floor stands over the operating nut, with couplings as required.

    a. Adjust elevation of the box top to conform to the elevation of the finished floor surface or grade at the completion of the Contract.
    b. Support boxes and stem guides during concrete placement to maintain vertical alignment.

17. Install brass male adapters on each side of valves in copper-piped system and solder adapters to pipe.
18. Install 1-inch gate and ball valves with cap for drains at main shutoff valves, low points of piping, bases of vertical risers, and equipment.
19. Install valves with clearance for installation of insulation and to allow access.
20. Provide access where valves and fittings are not accessible.
21. Pipe Hangers and Supports: As specified in Section 400507 "Hangers and Supports for Process Piping."
22. Comply with Division 40 "Process Interconnections" for piping materials applying to various system types.
23. Install insulation as specified in Section 404213 "Process Piping Insulation."

3.2 FOR PROCESS PIPING

A. Preparation:

1. Verify size, material, joint types, elevation, horizontal location, and pipe service of existing pipelines to be connected to new pipelines or new equipment.
2. Inspect size and location of structure penetrations to verify adequacy of wall pipes, sleeves, and other openings.
3. Welding Electrodes (where required): Verify proper grade and type, and free of moisture and dampness, and coating is undamaged.
4. Test Connections:

    a. Provide 1/2-inch female N.P.T. test connection equipped with 1/2-inch brass plug on all pump suction and discharge lines. Where indicated on the Drawings, test connections shall be equipped with bar stock valve and gauge. Provide test connections at all steam traps. The connection shall be located on the discharge side of the trap between the trap and the first valve. It shall consist of a 1/2-inch branch connection terminated with a gate valve.

5. Vents and Drains:

    a. Provide vents and drains in the following places:

        1) Water Lines: Vents at high points and drains at low points.
        2) Air Lines: Drains at low points.

6. Degrease and clean surfaces to receive adhesive for identification materials.
7. Stencil Painting: Prepare surfaces as specified in Division 09 "Finishes."

B. Installation:

1. Pipe shall be installed in the locations shown on Drawings, as specified and in accordance with the manufacturer's requirements. Additional installation requirements may be indicated in individual Drawings and specifications. Drawings do not attempt to show every detail; anticipate and work around obstructions.
2. Proceed with the installation of piping and supports only after any building structural work has been completed and new concrete has reached its 28-day compressive strength.
3. Dirt, scale, weld splatter, water, and other foreign matter shall be removed from the inside and outside of all items and subassemblies prior to installing.
4. Install piping true to alignment in a neat manner with lines straight and parallel or at right angles (or other defined angle) to equipment walls or column lines and with risers plumb. Run piping so as to avoid passing through ductwork, directly under electric light outlets, blocking access, or over electrical or instrumentation work. Avoid interference with other work or extending beyond furring lines as determined by Architectural Drawings. The installed system shall not interfere with maintenance and operational access to any equipment installed under this Section, or any other related Section. All work shall be accomplished using methods and procedures of pipe installation in accordance with the latest revision of applicable ANSI standards, ASME Codes, Pipe Fabrication Institute Standards, and as acceptable to Engineer and item's manufacturer.

    a. Use full length of pipe except where cut lengths are necessary. Do not "spring" or deform piping to make up joints.
    b. When cutting pipe is required, the cutting shall be done only with the written acceptance of Engineer and only by machine, leaving a smooth cut at right angles to the axis of the pipe. Cut ends shall not be undersized or out of rounds. Ends shall be carefully reamed and cleaned before being installed. Cut ends of pipe to be jointed with a bell shall be beveled to conform to the manufactured spigot end. Lining and coatings shall be undamaged, however, if repairs are necessary, they shall be as acceptable to the Engineer, or the item replaced.
    c. Do not use bushings except where specifically noted, or otherwise approved by Engineer. Reducers shall be eccentric, normally with the "flat side" on top to provide for drainage from all liquid-bearing pipes and facilitate air removal from pipes carrying liquids, unless otherwise noted or acceptable to Engineer.
    d. Verify the locations and elevations of any existing piping, vaults, manholes, equipment, sumps, utilities, structures, and other items before proceeding with work on any system. Any discrepancies between the information shown on Drawings and the actual conditions found in the field shall be reported at once to Engineer. No claim for extra payment will be considered if the above provision has not been complied with.
    e. Where piping of lower pressure rating ties into services, piping, or equipment of higher pressure rating the isolation valve and any joints between the two shall conform to the higher rating.
    f. Field mitering of pipe to form an elbow is not permitted unless specifically noted and approved by Engineer.
    g. Bending of piping is not permitted, except for flexible HDPE and copper lines. Use fittings for all major changes in direction. Any bending allowed and any deflection of any flexible joint made for that purpose (push on, bell and spigot, mechanical, joint, etc.) shall be a maximum of 75 percent of the manufacturer's recommended criteria). Solid sleeves shall be used only where approved by Engineer.
    h. Install piping with proper provision for expansion and contraction. Cold sprung pipe shall be erected with metal filler pieces bolted between flanges or tack welded

between weld joints. After the pipe, anchors, hangers, and supports have been erected, spacers shall be removed and the joint made.

i. Welded lines shall have long radius elbows except at expansion loops where elbow radius shall be equal to six times the pipe diameter (R=6D). Welding tees shall be used wherever the branch line diameter is equal to or one size smaller than the main line diameter; otherwise the branches shall be fabricated using "Weldolet" or "Sockolet" fittings as manufactured by Bonney Forge Inc. or equal. Reinforced welded tees will be used only where shown on the Drawings. Tapped connections in welded lines shall be provided by means of "Thredolet" or "Latrolet" fittings welded to the piping, as manufactured by Bonney Forge Inc., or equal.

j. All flange faces or weld faces shall be in perfect alignment.

k. Where flanges are to be connected directly to welded fittings, only welding neck flanges are allowed.

l. All open ends shall be closed off during installation, except if specifically required for joining adjacent pipings making connections or required by manufacturers' installation procedures. If ends must be open they shall be open immediately after completion of installation.

m. All piping interiors shall be thoroughly cleaned after installation and kept clean by approved temporary closures on all openings until the system is put in service. Closures should be suitable to withstand the hydrostatic test.

n. Dielectric pipe fittings shall be installed at changes in pipe material.

5. Supports, thrust, and seismic restraints shall be provided where required. See also Section 400507 “Hangers and Supports for Process Piping.”

6. Sleeves and wall pipes shall be installed of proper size for all pipes passing through floors or walls as shown on the Drawings, or if not shown, as otherwise acceptable to the Engineer.

7. Flanged and similar joints shall be made with opposite bolts tightened alternately and evenly to the required torque. For all bolts, under no conditions shall extension wrenches or pipe-over-handle ratchet wrenches be used to secure greater leverage.

8. All valves, fittings, equipment, and appurtenances needed shall be set and jointed as indicated on the Drawings or as required.

9. All electrical bonding or insulation, as required, shall be installed as joints are made up. Insulation fittings shall be utilized between dissimilar metals.

10. Unions: Screwed or flanged shall be provided where indicated and in the following locations even if not indicated:

    a. In long runs of piping to permit convenient disassembly for alterations or repairs.
    b. In bypasses around equipment.
    c. In connections to tanks, pumps, and other equipment between the shut-off valve and the equipment.
    d. In connections on both sides of controls and automatic control valves.

C. Welding:

1. Welding shall be in accordance with ANSI Standard B31 and AWS B3.0.

2. Install welded fittings on all welded lines. Make changes in direction and intersection of lines with welded fittings. Do not miter pipes to form elbows or notching of straight runs to form tees, or any similar construction. Do not employ welder who has not been fully qualified in above specified procedure and so certified by approved welding bureau or similar locally recognized testing authority.

3. Field welds shall be made by welders certified under ASME Section IX and be equal in all respects to shop welds. After field welding has been completed, all joints shall be thoroughly cleaned and buffed using deburring and finishing welds.

D. Finish Coating and Markings:

1. Pipe finish painting and marking is included in Division 09, but it shall be part of the work of this Section to assist, as required by Engineer in identifying pipe contents, direction of flow, and all else required for proper marking of pipe.
2. Install identifying devices after completion of coverings and painting.
3. Install plastic nameplates with corrosion-resistant mechanical fasteners or adhesive.
4. Install underground plastic pipe markers 6 to 8 inches below finished grade, directly above buried pipe.
5. Piping:

   a. Identify piping, concealed, or exposed, with plastic pipe markers.
   b. Identify service, flow direction, and pressure.
   c. Install in clear view and align with axis of piping.
   d. Locate identification not to exceed 20 feet on straight runs, including risers and drops, adjacent to each valve and tee, at each side of penetration of structure or enclosure, and at each obstruction.

6. Ceiling Tacks:

   a. Provide ceiling tacks to locate valves above T-bar-type panel ceilings.
   b. Locate in corner of ceiling panel closest to equipment.

E. Cleaning:

1. Prior to testing and at the conclusion of the Work, thoroughly clean all of the new, relocated, or modified piping by flushing with a fluid compatible with pipe use or other means acceptable to Engineer to remove all dirt, stones, pieces of wood, or other material that may have entered during construction. If, after this cleaning, obstructions remain, they shall be removed.
2. Blow compressed air systems and low-pressure air piping free of interior moisture and debris prior to closing system.
3. After the pipe work is cleaned, Engineer will examine the pipe for leaks. If defective pipes or joints are discovered at this time, they shall be repaired or replaced by Contractor.

F. Preparation for Pressure Testing:

1. Determine the fluid to be used for the test, and, if other than ambient temperature is required, what the test temperature will be.
2. When a fluid other than water is used for a test, the equipment used for the test shall be of a material compatible with the test fluid. Normally this would be equal to the piping material.
3. Vents shall be provided at the high points of the system and drains provided where means of venting or draining does not exist.

4. Remove or block-off, all relief valves, rupture discs, alarms, control instruments, etc., that shall be subjected to the test pressure. Take care not to exceed pressure rating for any items: insert blanks or bulk heads as needed.
5. All discs, balls, or pistons from check valves shall be removed if they interfere with filling of the system. Open all valves between inlet and outlet of the section to be tested.
6. Connect pump or compressor and provide temporary closures for all of the external openings in the system. Use caution to ensure that the closures are properly designed and strong enough to withstand the test pressure.
7. All joints, including welds, shall be left uninsulated and exposed for examination during test.
8. A joint previously tested in accordance with this specification may be covered or insulated.
9. Piping designed for vapor or gas shall be provided with additional temporary supports, if necessary, to support the weight of the test liquid.
10. Expansion joints shall be provided with temporary restraint for additional pressure under test, or shall be isolated from the test.
11. Flanged joints, where blanks are inserted to isolate equipment during the test, need not be tested.
12. All pipe shall remain undisturbed for at least the required minimum curing or cooling time.
13. Prior to testing, system and components shall be supported and anchored to prevent movement during test.
14. Insulation shall not be applied over piping prior to completion of testing. Welds or other type joints shall not be painted prior to completion of testing. This may require testing in certain specific areas ahead and separate from other areas to allow other trades to complete their work.
15. Lines containing check valves shall have the source of test pressure located on the upstream side. Control valves shall be set in the open position for the duration of the test.
16. Any piping support by springs shall be blocked up temporarily to a degree sufficient to sustain the test liquid load.
17. Pressure Piping:

    a. Install permanent and, where required, temporary thrust blocking or other restraint as necessary to protect adjacent piping or equipment and make taps in piping prior to testing.
    b. Wait 7 days minimum after concrete thrust blocking is installed to perform pressure tests. If high-early strength cement is used for thrust blocking, wait may be reduced to 2 days.
    c. Prior to test, remove or suitably isolate appurtenant instruments or devices that could be damaged by pressure testing.
    d. New Piping Connected to Existing Piping.
    e. Isolate new piping with grooved-end pipe caps, spectacle blinds, blind flanges, or as acceptable to Engineer.
    f. Test joint between new piping and existing piping by methods that do not place entire existing system under test load, as approved by Engineer.
    g. Test Pressure: As specified herein.

18. Test section may be filled with water and allowed to stand under low pressure prior to testing.

G. Hydrostatic Test for Pressure Piping:

1. Test Pressure: required by Code shall be 1-1/2 times the working pressure unless noted. Working pressure is noted in the Pipe Schedule on Drawings.
2. Hydrostatic test pressure readings may be taken at the lowest point of the line or system of lines providing static head is added to the minimum hydrostatic test pressure. Care should be taken to ensure that at no point a dangerous overpressure is experienced.
3. Test Length: Maintain pressure for length of time indicated; or if not indicated, for minimum 2 hours.
4. General Suggested Procedures:

    a. Exact test method shall be proposed by Contractor, in accordance with manufacturers' recommendations, in Contractor's Test Plans. Note special procedures and requirements required by any codes or regulations.
    b. Allow the test fluid to enter the system. Open vents to allow displacement of all entrapped air. For all pipelines exceeding 500-feet in length the maximum rate of filling shall be limited to that which produces a maximum nominal flow velocity of one fps in pipe to be tested.
    c. See that all personnel not involved in the test vacate the area.
    d. Vent piping during filling. Open vents at high points of piping system or loosen flanges, using at least four bolts, or use equipment vents to purge air pockets.
    e. Raise the pressure slowly with the test pump or compressor until the predetermined test pressure is reached. Keep personnel at a safe distance at all times.
    f. When pipe is full, stabilized, and at proper temperature, close vents and valves.
    g. Reduce the pressure about 20 percent and hold it at that point while the entire system is carefully inspected for leaks, cracks, or other signs of defects.
    h. If defects or leaks are found, the pressure shall be released, the system drained, the defects corrected, and the test repeated until tests are successful at no additional cost to Owner.
    i. After a satisfactory test has been completed, the line shall be slowly depressurized at a point remote from the monitoring system and drained.
    j. Flushing: after successful test, lines shall be flushed, drained, and if clean water is not used, and liquid disposed of as acceptable to Engineer.

5. Exposed Piping - additional items:

    a. Perform testing on installed piping prior to application of insulation.
    b. Maintain hydrostatic test pressure continuously for time noted, and for such additional time as necessary to conduct examinations for leakage.
    c. Examine joints and connections for leakage.
    d. Allowable leakage: no leakage or pressure drop is allowed.
    e. Correct leakage and retest as specified.

H. Pneumatic Test:

1. This procedure for a pneumatic test of piping systems shall be used when directed by the Engineer when water, or other liquid, cannot be introduced into the line, or as a supplement to a hydrostatic test.
2. Test Pressures: if not noted otherwise in the Pipe Testing Schedule or in the individual specifications or on Drawings or required by Code, shall be 110 percent of the anticipated maximum operating pressure, but not exceeding 100 psig and not less than 5 psig at the highest point in the system unless otherwise noted.

3. Test Length. Maintain pneumatic test pressure continuously for minimum of 10 minutes and for such additional time as necessary to conduct soap bubble examination for leakage, unless otherwise noted.
4. General Suggested Procedures:

    a. Exact test method shall be proposed by Contractor, in accordance with manufacturers' recommendations, in Contractor's Test Plans. Note special procedures and requirements required by any codes or regulations.
    b. See that all personnel not involved in the test vacate the area.
    c. Apply preliminary pneumatic test pressure of 15 psig maximum to piping system prior to final leak testing to locate visible leaks. Apply soap bubble mixture to joints and connections; examine for leakage.
    d. If leaks are found, the lines shall be relieved of pressure, purged if necessary, and repaired. Tests shall be repeated for repaired sections until results are satisfactory at no additional cost to Owner.
    e. Gradually increase pressure in system to half of specified test pressure. Thereafter, increase pressure in steps of approximately one-tenth of specified test pressure until required test pressure is reached. Inspections shall be made at 20 psig intervals until the test pressure is reached using sound, soap solution or a drop in indicated pressure.
    f. When the specified test pressure is reached, shut off the valve in the supply line from the test gas source.

5. Allowable Leakage:

    a. Piping system, exclusive of possible localized instances at pump or valve packing (which shall be as acceptable to Engineer), shall show no visual evidence of leakage.

6. After successful testing and final cleaning, purge with air or nitrogen gas those lines that will carry gases other than air to assure no explosive mixtures will be present in system during filling process.

I. Pipe Joint Testing:

1. Done in accordance with AWWA C206, as acceptable to the Engineer.
2. Test records:

    a. In addition to the items under Field Quality Control: location of piping sections in which the testing is being done, the location of each joint tested; a specific statement to indicate if the referenced joint passed or failed the test and how the joint is to be sealed/repaired.

3.3 FIELD QUALITY CONTROL

A. Valve Field Testing:

1. Test for proper alignment.
2. If specified by valve Section, field test equipment to demonstrate operation without undue noise, vibration, or overheating.

3. Engineer will witness field testing.
4. Functional Test:

    a. Prior to system startup, inspect valves and actuators for proper alignment, quiet operation, proper connection and satisfactory performance.
    b. After installation, open and close all manual valves in the presence of Engineer to show the valve operates smoothly from full open to full close and without leakage.
    c. Cycle valves equipped with electric, pneumatic or hydraulic actuators 5 times from full open to full closed in the presence of the Engineer to exhibit operation without vibration, jamming, leakage, or overheating.
    d. Operate pressure control and pressure relief valves in the presence of Engineer to show they perform their specified function at some time prior to placing the piping system in operation and as agreed during construction coordination meetings.

5. Field test pipelines in which the valves and appurtenances are to be installed. During these tests, adjust, remove or replace defective valve or appurtenance, or otherwise make acceptable to Engineer. Test regulating valves, strainers, or other appurtenances to demonstrate conformance with the specified operational capabilities. Correct deficiencies replace device or otherwise made acceptable to Engineer.
6. Test Report Documentation:

    a. Test date.
    b. Description and identification of piping tested.
    c. Test fluid and flow rates.
    d. Test pressure.
    e. Remarks, including:
    f. Leaks (type, location).
    g. Repair/replacement performed to remedy excessive leakage.
    h. Signed by Contractor and Engineer to represent that test has been satisfactorily completed.

3.4 ATTACHMENTS

A. Valve Schedule: Appendix A

END OF SECTION 400551

© 2023 CDM Smith
All Rights Reserved

SECTION 400559.23 - STAINLESS STEEL SLIDE GATES

PART 1 - GENERAL

1.1 RELATED DOCUMENTS

A. Drawings and general provisions of the Contract, including General and Supplementary Conditions and Division 01 Specification Sections, apply to this Section.

1.2 SUMMARY

A. Section Includes:

1. Stainless steel slide gates.

B. Related Requirements:

1. Section 460553 “Identification for Water and Wastewater Equipment” for nameplates for equipment specified in this Section.

1.3 DEFINITIONS

A. Operating Head: Distance from centerline of gate to maximum water level of channel.

B. Slide Gate: A flow control device which generally operates by lifting a gate upwards in a channel, allowing water to flow under the gate. Fabricated slide gates specified in this section shall be “sluice gate type” with top, bottom, and side seals.

1.4 ACTION SUBMITTALS

A. Product Data: Manufacturer's product information for system materials and component equipment.

B. Shop Drawings:

1. System materials and component equipment.
2. Description of materials cross-referenced to a sectional drawing listing material by trade name and ASTM reference number.
3. Certified shop and installation drawings showing details of construction, dimensions, and anchor bolt locations.
4. Installation and anchoring requirements, fasteners, and other details.
5. Descriptive literature, bulletins and/or catalogs of the equipment.
6. The weight of each component.
7. Description of surface preparation and shop prime painting of gates and accessories.
8. Gate identification number, location, service, type, size, design pressure, operator details, stem details, and loads.
9. Listing of forces transmitted to floor stands if applicable.

1.5 INFORMATIONAL SUBMITTALS

A. Manufacturer's Certificate: Products meet or exceed specified requirements.

B. Manufacturer's Instructions: Detailed instructions on installation requirements, including storage and handling procedures.

C. Source Quality-Control Submittals: Results of factory tests and inspections.

D. Field Quality-Control Submittals: Results of Contractor-furnished tests and inspections.

E. Manufacturer Reports:

1. Certify that equipment has been installed according to manufacturer's instructions.
2. Document activities on Site, adverse findings, and recommendations.

F. Qualifications Statements:

1. Submit qualifications for manufacturer and licensed professional.

1.6 CLOSEOUT SUBMITTALS

A. Operation and Maintenance Data: Submit maintenance instructions for equipment and accessories.

1.7 MAINTENANCE MATERIAL SUBMITTALS

A. Spare Parts:

1. Furnish one set of manufacturer's recommended spare parts.

B. Tools: Furnish special tools and other devices required for Owner to maintain equipment. Provide special tools and spare parts required for normal operation and maintenance of the equipment.

C. O&M Manual: One copy of manufacturer's operation and maintenance manuals.

1. Include required cuts, drawings, equipment lists, descriptions, etc. to instruct operating and maintenance personnel unfamiliar with such equipment.
2. Include trouble shooting data and full preventive maintenance schedules.

D. Factory Representative: Provide three days to instruct representatives of Owner on proper operation and maintenance of the equipment.

1.8 QUALIFICATIONS

A. Manufacturer: Company specializing in manufacturing products specified in this Section with minimum five years' documented experience.

B. Licensed Professional: Professional engineer experienced in design of specified Work and licensed in State of Texas.

1.9 DELIVERY, STORAGE, AND HANDLING

A. Inspection: Accept materials on Site in manufacturer's original packaging and inspect for damage.

B. Store materials according to manufacturer's instructions.

C. Protect materials from physical damage, moisture, and dust by storing in clean, dry location remote from areas involved in construction operations.

1. Provide additional protection according to manufacturer's instructions.

1.10 EXISTING CONDITIONS

A. Field Measurements: Verify field measurements prior to fabrication. Document field measurements on Shop Drawings.

1.11 WARRANTY

A. Submit three-year manufacturer's warranty for slide gates.

B. Submit five-year manufacturer's warranty that clear plastic stem covers will not crack, discolor, or become opaque.

PART 2 - PRODUCTS

2.1 PERFORMANCE AND DESIGN CRITERIA

A. Seating and Unseating Pressure:

1. As shown in Gate Schedule.
2. Measurement: From maximum water surface to centerline of gate.

B. Minimum Vertical Loading: 50 percent of force on the gate from operating head acting on horizontal centerline of gate, multiplied by effective gate area, plus weight of slide and stem.

C. Gate Reinforcement: As required for deflection not greater than 1/360 of span.

D. Operating Head:

1. Safety Factor: Design gate to operate under specified operating head with safety factory of five.

2.2 STAINLESS STEEL SLIDE GATES

A. Manufacturers:

1. RW Gate Company.
2. Golden Harvest.

3. Waterman Industries.

B. Description:

1. Comply with AWWA C561.
2. Self-contained stainless steel slide gate, with extended frame, yoke, lifting stem attached to yoke, lift and lift support, stem, stem guide, and stem block.
3. Size: As indicated on Drawings and as indicated in schedule.
4. Operating Head: As indicated in schedule.
5. Closure: Conventional.
6. Opening: Upward.

C. Gates: Type 316 stainless steel, self-contained type with disc arranged to lower or raise to open and with guides designed to mount on the face of or embedded in concrete.

1. Disc or Sliding Member: Type 316 and the stainless steel plate reinforced with "U" or angle-shaped stainless steel members welded to the plate not more than 16 inches apart.

a. Deflection: 1/360 of span of the gate under the design head.
b. Reinforcing Ribs: Extend into guides so they overlap seating surface of the guide.
c. A Specially Molded Resilient Seal:

1) Mounted on bottom of embedded unit discs or on the edge of the disc to provide flush bottom closure.
2) Seal Shape: Produce a seating surface with minimum width of 3/4 inch and extend into secondary slot of the guide.
3) Vertical Seal Face: In contact with seating surface of guide providing a proper seal at the corners.

d. Reinforcements, Retainer and Bolts: Same material as disc.
e. Invert of embedded unit frames to have an angle welded to the lower ends of the guides forming a seating surface for a resilient seal mounted on the disc. Angle to be the same material as the guides.

2. Minimum Thickness: 1/4 inch.
3. Configuration: Removable.

D. Guides: Type 316 stainless steel construction, designed for maximum rigidity, weighing a minimum of 3 lbs. per foot.

1. Holes for anchor bolts every 18 inches for face mounted units or embedding keyways for embedded units.
2. Guides to extend beneath opening a sufficient amount to support the disc in fully down or open position for downward opening gates.
3. Weld angle to guides across the invert of the opening on face-mounted gates and up both sides of all gates. Attach a hollow bulb "J" or "P"-seal to angle with stainless steel strips and attaching bolts. Arrange seal so it deflects 1/16 inch minimum. Angle, strips, and bolts to be the same material as the guides.
4. Where guides extend above operating floor, they must be sufficiently strong, so no further reinforcing is required.
5. Where required, the yoke supporting the operating bench stand will be formed by two angles welded at top of the guides providing a one-piece rigid frame.

E. Yokes: Structural steel; bolted to gate frame.

1. Arrangement: Disc and stem to be removable without disconnecting the yoke.

F. Seats: Impacted into dovetail slots and held in position without use of screws or other fasteners.

1. Maximum Clearance between Seating Faces: 0.004 inch when gate is fully closed.

G. Wedges: Machined brass blocks with angled faces and secured with a stud bolt to prevent slippage during operation.

1. Wedge Types: Side, top, and bottom.

H. Frames: One-piece configuration.

1. Mounting: As indicated on gate schedule.
2. Material: Type 316 stainless steel.
3. Furnish continuous embed or mounting flange as indicated on gate schedule.
4. Thickness: 1/4 inch.
5. Seats: Ultra-high-molecular-weight polymer.
6. Bottom Flush Closure: Resilient seal securely attached to frame along invert.

I. Lifting Nut: Brass.

1. Grease fitting.
2. Polymer bearing pads above and below lifting nut.

J. Lifting Stem: Type 316 stainless steel for the entire length.

1. Tensile Strength: 60,000 psi.
2. Diameter: Of sufficient size at base of thread to lift weight of gate, offset the resistance of the gate to the maximum unbalanced head and fully allow for starting impact.
3. Transmit in compression at least two times the rated output of the crank operated floor stand with a 40 lb effort on the crank.
4. Stems More Than One Section: Joined by stainless steel couplings pinned and bolted to the stems.
5. Threaded and Keyed Couplings of Same Size: To be interchangeable.
6. Bronze Stop Collars: On the stem preventing over closing of the gate.
7. Minimum Diameter: 1-1/2 inch to withstand twice the rated output of the operator.
8. Slenderness Ratio (l/r): Less than 200.
9. Stem Guides: Provide as recommended by manufacturer. High nickel content cast iron, bronze brushed, mounted in a high nickel content cast iron bracket. Adjustable in two directions and spaced at sufficient intervals to adequately support the stem. Spacing not to exceed 10 feet.
10. Configuration: Rising; removable.
11. Thread: Machine cut threads, Acme type, double lead. Cut threads are not acceptable.
12. Diameter: 1-1/8 inch.
13. Fully lubricated.
14. Maximum Number of Turns: 16 per foot of travel.
15. Stem Covers: Provide rising stem gates with clear fracture resistant polycarbonate, methacrylate plastic, or butyrate plastic covers.

    a. Will not discolor or become opaque for a minimum of 5 years after installation.

b. Capped, vented, and of a length to allow full travel of gate.
c. Bottom end mounted in a housing or adapter plate for easy field mounting.
d. Indicator markings showing gate position.

2.3 FINISHES

A. Stainless Steel Surfaces: Mill finish.

2.4 ACCESSORIES

A. Hardware: Type 316 stainless steel. Conform to ASTM A193/A194 and F593/F594 unless otherwise specified.

B. Attaching Bolts and Anchor Bolts: Type 316 stainless steel. Furnished by slide gate manufacturer.

C. Nameplates: Per Section 460553 “Identification for Water and Wastewater Equipment.”

2.5 SOURCE QUALITY CONTROL

A. Shop inspection and testing of completed assemblies.

B. Certificate of Compliance: When fabricator is approved by authorities having jurisdiction, submit certificate of compliance indicating Work performed at fabricator's facility conforms to Contract Documents.

1. Specified shop tests are not required for Work performed by approved fabricator.

PART 3 - EXECUTION

3.1 EXAMINATION

A. Verify facilities are ready to receive slide gates.

3.2 PREPARATION

A. Clean surfaces according to manufacturer's instructions.

3.3 INSTALLATION

A. Install slide gates according to manufacturer's instructions.

B. Ensure products are installed plumb, true, and free of warp or twist.

C. Locate operators to avoid interference with handrails and other Work.

D. Gate Installation: Under the supervision of the gate manufacturer’s factory representative.

1. Factory Representative: Furnish services for one day of a factory representative who has complete knowledge of proper installation, startup, and operation of stainless steel slide gates. Inspect the final installation and supervise a test of the equipment.

E. If there are difficulties in operation of the equipment due to the manufacturer's fabrication or Contractor's installation, additional service will be provided at no cost to the Owner.

F. Guides: Surface and Flange Mounted.

1. Install guides with expansion anchors.
2. Position guides at elevation as indicated on Drawings.

G. Guides: Recessed.

1. Cut slot in concrete to receive guides.
2. Position guides at elevation as indicated on Drawings.
3. Grout guides in place according to manufacturer's instructions.

H. Sealant:

1. Apply 1/8 inch thick layer of elastomeric sealant to back of frame.
2. Tighten nuts snug until sealant begins to flow beyond frame.
3. Remove excess sealant.
4. Cure sealant for minimum seven days.
5. Tighten nuts to their final positions.

I. Lubricants: Oil and grease as required for initial operation.

3.4 FIELD QUALITY CONTROL

A. Inspection: Verify gate and components alignment, smooth operation, with no binding or scraping.

B. Testing per AWWA C561:

1. Leakage Under 20 feet of Seating Head: 0.05 gpm/ft. of seating perimeter
2. Leakage Under 20 feet of Unseating Head: 0.2 gpm/ft.
3. After installation, field test slide gates ensuring items of equipment are in compliance with Specifications, including leakage requirements.
4. For units failing to meet specified requirements, make necessary change and retest units. If unit remains unable to meet test requirements to Engineer’s satisfaction, it will be replaced with a satisfactory unit at no additional cost to Owner.

C. Manufacturer Services: Manufacturer's representative experienced in installation of products furnished per this Section for a minimum of one day on Site for installation, inspection, field testing, and instructing and training Owner's personnel in maintenance of equipment.

D. Equipment Acceptance: Adjust, repair, modify, or replace components failing to perform as specified and re-inspect.

1. Make final adjustments to equipment under direction of manufacturer's representative.

E. Furnish physical checkout and installation certificate from equipment manufacturer's representative attesting equipment has been properly installed and is ready for startup and testing.

F. Submit the equipment manufacturer's Certificate of Field Testing.

G. Submit the equipment manufacturer's Certificate of Functional Testing.

3.5 ADJUSTING

A. Adjust slide gates to provide smooth operation.

3.6 DEMONSTRATION

A. Demonstrate equipment operation, routine maintenance, and emergency repair procedures to Owner's personnel.

3.7 ATTACHMENTS

A. Slide Gate Schedule:

LOCATION	TAG NUMBER	TAG TYPE	GATE MATERIAL	FRAME MOUNTING	OPENING DIRECTION	GATE SIZE (WxH)	TOP OF WALL EL.	TOP OF GATE OPENING EL.	TOP OF FRAME EL.	SEATED HEAD (FT)	UNSEATED HEAD (FT)	OPERATOR	ACTUATION	STEM	SPECIAL NOTES
U/S OF WETWELL	S04-SG-01	SG	STAINLESS STEEL	EMBEDDED	UPWARD	36"X36"				2		HANDWHEEL	MANUAL	RISING	
U/S OF WETWELL	S04-SG-02	SG	STAINLESS STEEL	EMBEDDED	UPWARD	36"X36"				2		HANDWHEEL	MANUAL	RISING	
WETWELL	S04-SG-03	SG	STAINLESS STEEL	EMBEDDED	UPWARD	36"X36"				2	5	HANDWHEEL	MANUAL	RISING	

B. Slide Gate Table: Manufacturer will supply slide gates within the project as indicated on gate schedule or as shown on Drawings. In the absence of seating and unseating head data, manufacturer will assume a flooded basin condition from top of concrete to base of gate and assume both a seating and unseating loading condition.

END OF SECTION 400559.23

© 2023 CDM Smith
All Rights Reserved

SECTION 400561 - GATE VALVES

PART 1 - GENERAL

1.1 RELATED DOCUMENTS

A. Drawings and general provisions of the Contract, including General and Supplementary Conditions and Division 01 Specification Sections, apply to this Section.

1.2 SUMMARY

A. Section Includes:

1. Solid wedge, resilient-seated gate valves.

B. Related Requirements:

1. Section 400551 “Common Requirements for Process Valves” for basic materials and methods related to valves commonly used for process systems.
2. Section 400557 “– Actuators for Process Valves and Gates”.

1.3 DEFINITIONS

A. Outside screw and yoke (OS&Y) valve: A valve in which the operating screw is driven by a threaded nut that is built into the handle.

1.4 SUBMITTALS

A. As specified in Section 400551 “Common Requirements for Process Valves” for submittal requirements for compliance with this section.

1.5 QUALITY ASSURANCE

A. Test valves in accordance with AWWA C500, C509, C515.

B. Provide Installation Inspection and Operator Training per Section 400551 “Common Requirements for Process Valves”.

C. Provide testing and inspection certificates.

1.6 WARRANTY

A. Furnish manufacturer's warranty for valve and associated components for two years from the date of Substantial Completion.

PART 2 - PRODUCTS

2.1 SOLID WEDGE, RESILIENT-SEATED GATE VALVES – TAG TYPE GV1

A. Manufacturers:

1. American Flow Control.
2. Clow Valve.
3. Mueller.
4. EJ Flow Master.

B. Description:

1. Above grade wastewater service.
2. As specified in Section 400551 “Common Requirements for Process Valves”.
3. Comply with AWWA C509 and C515 as applicable to the type of valve specified.
4. Except as otherwise specified, valves shall be rated for a working pressure of 150 psi:

   a. All valve bodies shall be hydrostatically tested to at least twice the rated working water pressure. In addition, valves shall be seat tested, bi-directional at the rated working pressure, with seat leakage not to exceed one fluid ounce per inch of valve diameter per hour. Provide certificates of testing.

5. End Connections: ASME B16.1, ASME B16.5, and ASME B16.42, flanged.
6. Gear Actuators for Manual Valves: Comply with AWWA C509 and C515 as applicable to the type of valve specified.
7. Body: no recesses in valve body.

C. Operation:

1. As specified in Section 400551 “Common Requirements for Process Valves”.
2. Stem: Non-rising.
3. Operator: Manual handwheel and Electrically actuated as indicated on the drawings.
4. Furnish gear operators for valves 8 inches and larger, and chainwheel operators for valves mounted over 6 feet above operating floor.
5. Unless otherwise noted, all valve operators shall be installed on the valves at the factory, as shown on the Drawings or as acceptable to the Engineer so as to allow access to operate and maintain components and to prevent interference with other piping, valves and appurtenances.

D. Materials:

1. Wedge: Resilient ASTM A126, cast or ductile iron, fully encapsulated with an approved synthetic rubber material, bonded and vulcanized in accordance with ASTM B429 Method B.
2. Body: ASTM A126, cast iron or ASTM A536, ductile iron
3. Disc: vulcanized rubber bonded and vulcanized in accordance with ASTM B429 Method B.
4. Stem, Stem Nuts, Glands, and Bushings: Type 316 stainless steel.
5. Connecting Hardware: Type 316 stainless steel.

6. Exposed valves shall be furnished with Class 125 flanged ends and provided with outside screw, yoke, and handwheel operator.

E. Finishes:

1. As specified in Section 400551 “Common Requirements for Process Valves”.
2. Body, internal and external, including bonnet: AWWA C550, Epoxy, 4-mil minimum thickness.
3. Gate: ASTM D2000 EPDM encapsulated, ASTM B429 Method B Bonded and vulcanized.

2.2 SOURCE QUALITY CONTROL

A. As specified in Section 400551 “Common Requirements for Process Valves”.

B. Testing: Test gate valves according to AWWA C509.

C. UL and FM approved.

PART 3 - EXECUTION

3.1 INSTALLATION

A. According to AWWA C500 and C509.

B. Dielectric Fitting: Provide between dissimilar metals.

END OF SECTION 400561

© 2023 CDM Smith
All Rights Reserved

This page intentionally left blank.

© 2023 CDM Smith
All Rights Reserved

SECTION 400562 - PLUG VALVES

PART 1 - GENERAL

1.1 RELATED DOCUMENTS

A. Drawings and general provisions of the Contract, including General and Supplementary Conditions and Division 01 Specification Sections, apply to this Section.

1.2 SUMMARY

A. Section Includes:

1. Eccentric plug valves.

B. Related Requirements:

1. Division 22 for miscellaneous plumbing valves as required by Project.
2. Section 400551 "Common Requirements for Process Valves and Piping" for basic materials and methods related to valves commonly used for process systems.
3. 400557 Actuators for Process Valves and Gates

1.3 SUBMITTALS

A. As specified in Section 400551 "Common Requirements for Process Valves" for submittal requirements for compliance with this Section.

1.4 QUALITY ASSURANCE

A. Test valves in accordance with AWWA C517

B. Provide Installation Inspection and Operator Training per Section 400551 "Common Requirements for Process Valves and Piping."

C. Provide testing and inspection certificates.

1.5 WARRANTY

A. Upon completion of installation (in accordance with approved installation manuals) and successful start-up and upon acceptance by the Owner; provide valve and appurtenance warranties in compliance with CIP 16, Warranty and Section 016000 “Product Requirements”.

PART 2 - PRODUCTS

2.1 ECCENTRIC PLUG VALVES – Tag Type PV1

A. Manufacturers: Provide by one of the following:

1. DeZurik.
2. Pratt.
3. Kennedy

B. Description:

1. As specified in Section 400551 "Common Requirements for Process Valves."
2. Type:

a. Offset disc type.
b. Non-lubricated.
c. Serviceable (able to be repacked) under full line pressure.
d. Eccentric.
e. Capable of sealing in both directions at the rated pressure.
f. unobstructed flow path when open.
g. Drop tight shut-off to the full valve rating with pressure on either side of the plug.

3. Body:

a. 30,000-psi tensile strength.
b. Top entry, bolted bonnet.
c. Body shall be cast with integral piping connections.

4. Plug:

a. To be removable without removing the valve from the line.
b. To have an integral upper and lower shaft:

1) Seals on upper and lower journals to prevent entrance of solids into journals.

c. One piece for all valves.

5. Bearings:

a. Permanently lubricated.

6. Valves rated at minimum 175 psi WOG (Water, Oil and Gas) working pressure for sizes 12-inches and larger, and minimum 150 psi WOG working pressure for sizes 14-inches and larger.
7. Working Pressure: As indicated in valve schedule or be of same working pressure as the pipe they connect to, whichever is higher. Working pressure of pipe is noted on Pipe Schedule on Drawings.

a. Plug Valves Under This Paragraph:

1) Leak and hydrostatically tested in accordance with AWWA C504, except as herein modified.
2) At above rated minimum working pressures, valves shall be certified by manufacturer as permitting zero leakage for a period of at least one-half hour with pressure applied to the seating face.
3) At direction of Engineer, valve manufacturer may be requested to perform a valve seat leakage test, witnessed by Engineer to prove compliance.

8. Maximum Process Fluid Temperature: As indicated on valve schedule or same fluid temperature as pipe they connect to, whichever is higher. Fluid temperature of pipe is noted in Pipe Schedule on Drawings.
9. Ports:

   a. Port Area: 80 percent of nominal pipe area for valves 20 inches and smaller.

10. Seats:

    a. Full 360-degree seating by contact of a resilient seating material on the plug mating with welded-in seating surface in the body.
    b. Screw in body seats not acceptable.
    c. Resilient and of the continuous interface type having consistent opening and closing torques.
    d. Non-jamming in the closed position.

11. Stem Bearings: Self-lubricating.
12. Stem Seals:

    a. Type: V-ring.
    b. Externally adjustable and repackable without removing the bonnet from the valve, or self-adjusting.

13. Packing and Gland: Accessible and externally adjustable.
14. End Connections:

    a. Mechanical Joint: Comply with ANSI/AWWA C111/A21.11
    b. Flanged: Comply with ASME B16.1 and B16.42.

C. Operation:

1. As specified in Section 400551 “Common Requirements for Process Valves.”
2. A suitably sized steel actuator mounting bracket shall be provided to provide an air gap between actuator and valve stem seal. Under no circumstance shall gear box be mounted directly to the top body flange such that leakage could directly enter the gear box.
3. Provide adjustable limit stops for both opening and closing and a clearly marked position indicator.
4. Furnish chain wheel operators for valves mounted over 5 feet above operating floor.
5. Install valves larger than 6 inches with worm gear actuators. Enclose gearing in a cast iron housing, with outboard seals to protect bearings and other internal components. Support actuator shaft and gear quadrant on permanently lubricated bronze bearings.

D. Materials:

1. Body:

   a. Cast iron, ASTM A126 or Ductile iron, ASTM A536.

2. Plug:

   a. Ductile iron, ASTM A536, Grade 65-45-12 or Cast iron ASTM A126, Grade B.

3. Seats: High Nickel.
4. Stem Bearings: Bronze or Stainless steel.
5. Seals: Buna N or Neoprene.
6. Connecting Hardware: Exposed: zinc or cadmium plated, Buried: Type 316 stainless steel.

E. Finishes: As specified in Section 400551 "Common Requirements for Process Valves."

2.2 ECCENTRIC PLUG VALVE WITH MODULATING ACTUATOR FOR FLOW CONTROL-Tag Type PV3

A. Manufacturers:

1. DeZurik.
2. Engineer approved equal.

B. Description:

1. Refer to paragraph 2.1, B above.

C. Operation:

1. As specified in Section 400551 "Common Requirements for Process Valves" and 40557 "Actuators for Process Valves and Gates".
2. A suitably sized steel actuator mounting bracket shall be provided to provide an air gap between the actuator and the valve stem seal. Under no circumstance shall the gear box be mounted directly to the top body flange such that leakage could directly enter the gear box.

D. Materials:

1. Refer to paragraph 2.1, D above.

E. Finishes:

1. As specified in Section 400551 "Common Requirements for Process Valves".

2.3 SOURCE QUALITY CONTROL

A. As specified in Section 400551 "Common Requirements for Process Valves and Piping."

B. Testing: Hydrostatic Test Per ANSI B16.1 and B16.5.

C. Submit an affidavit of compliance stating that the valves have been manufactured and tested in accordance with AWWA C504-00, Section 5.2.4 and specifically list all exceptions.

D. Perform a valve seat leakage test as required in specification 400551.

PART 3 - EXECUTION

3.1 GENERAL

A. As specified in Section 400551 “Common Requirements for Process Valves and Piping” for submittal requirements for compliance with this Section.

3.2 INSTALLATION

A. According to AWWA C517.

B. Horizontal Piping: Stem horizontal, Plug opening to crown of body.

C. Vertical Piping: Plug at top when closed.

D. Plugs: On top when open and on pressure side when closed.

END OF SECTION 400562

© 2023 CDM Smith
All Rights Reserved

This page intentionally left blank.

© 2023 CDM Smith
All Rights Reserved

SECTION 400565.23 - SWING CHECK VALVES

PART 1 - GENERAL

1.1 RELATED DOCUMENTS

A. Drawings and general provisions of the Contract, including General and Supplementary Conditions and Division 01 Specification Sections, apply to this Section.

1.2 SUMMARY

A. Section Includes: Swing check valves 8 inches and larger.

B. Related Requirements:

1. Section 099679 “Atmospheric Protection and Plant Service Areas Coatings.”
2. Section 400551 “Common Requirements for Process Valves” for basic materials and methods related to valves commonly used for process systems.

1.3 COORDINATION

A. Section 400551 “Common Requirements for Process Valves” for valve schedule.

B. Coordinate Work of this Section with piping and equipment connections as specified in other Sections and as indicated on Drawings.

1.4 ACTION SUBMITTALS

A. Comply with Section 400551 “Common Requirements for Process Valves.”

B. Product Data: Submit manufacturer's catalog information, indicating materials of construction and compliance with indicated standards.

1.5 INFORMATIONAL SUBMITTALS

A. Manufacturer's Certificate: Certify that products meet or exceed specified requirements.

B. Source Quality-Control Submittals: Indicate results of factory tests and inspections and provide required certifications.

C. Field Quality-Control Submittals: Indicate results of Contractor-furnished tests and inspections.

D. Qualifications Statement:

1. Submit qualifications for manufacturer.

1.6 CLOSEOUT SUBMITTALS

A. Project Record Documents: Record actual locations of piping, valves and other appurtenances, connections, and centerline elevations.

1.7 QUALIFICATIONS

A. Manufacturer: Company specializing in manufacturing products specified in this Section with minimum of five years' experience.

1.8 DELIVERY, STORAGE, AND HANDLING

A. Comply with Section 400551 “Common Requirements for Process Valves.”

B. Inspection: Accept materials on Site in manufacturer's original packaging and inspect for damage.

C. Store materials according to manufacturer instructions.

D. Protection:

1. Protect materials from moisture and dust by storing in clean, dry location remote from construction operations areas.
2. Protect valves and appurtenances by storing off ground.
3. Protect valve ends from entry of foreign materials by providing temporary covers and plugs.
4. Provide additional protection according to manufacturer instructions.

1.9 WARRANTY

A. Furnish manufacturer's warranty for valve and associated components for two years from the date of Substantial Completion.

PART 2 - PRODUCTS

2.1 IRON BODY SWING CHECK VALVES 4-INCH AND LARGER - Tag Type CV1

A. Manufacturers: Provide products by one of the following:

1. GA Industries.
2. DeZurik.
3. Mueller.
4. Val-Matic.
5. Pratt.

B. Description:

1. Comply with AWWA C508.
2. Size: 8 inches and larger.
3. Type: Swing, metal disc, with hinge shaft extended from body, sealed with stuffing box, packing and gland.
4. Seat: Bronze.
5. Working Pressure: 85 psig.
6. Rated Pressure: 150 psig

    a. Hydrostatically test valve bodies to at least twice working water pressure. In addition, valves shall be seat tested, bidirectional at the rated working pressure, with seat leakage not to exceed one fluid ounce per inch of valve diameter per hour. Provide certificates of testing.

7. Disc Controller:

    a. Oil cylinder cushion to control “slamming” of the valve.

8. Mounting: Bottom or side.
9. End Connections: Flanged, ASMR B16.1.

C. Materials:

1. Body and Cover:

    a. Cast Iron: ASTM A126.
    b. Ductile Iron: ASTM A536.
    c. Lining: Epoxy Glass Lining, as specified in Section 400519 “Ductile Iron Process Pipe.”

2. Disc:

    a. Bronze: ASTM B62.
    b. Ductile Iron: ASTM A536.

3. Seat: Field replaceable, bronze, ASTM B62.
4. Packing and O-Ring: Buna N.
5. Grease Fittings: Type 316 stainless steel.
6. Rubber Components: Buna N.
7. Connecting Hardware: Type 304 stainless steel.

D. Construct valves so that disc and body seat may be easily removed and replaced without removing the valve from the line.

1. Fit with an extended hinge arm with outside lever and weight.
2. The position of the weight shall be adjustable.
3. Install level so as to be in the horizontal position when the valve is in the closed position, for both horizontal and vertical pipeline installations.

E. Finished: As specified in Section 400551 “Common Requirements for Process Valves.”

2.2 SOURCE QUALITY CONTROL

A. Section 400551 “Common Requirements for Process Valves.”

B. Testing:

1. Hydrostatically test check valves at twice rated pressure according to AWWA C508.
2. Permitted Leakage at Indicated Working Pressure: None.

PART 3 - EXECUTION

3.1 EXAMINATION

A. Verify that field dimensions are as indicated on Shop Drawings.

B. Inspect existing flanges for nonstandard bolt-hole configurations or design and verify that new valve and flange mate properly.

3.2 PREPARATION

A. Thoroughly clean valves before installation.

B. Surface Preparation:

1. Touch up shop-primed surfaces with primer.
2. Solvent-clean surfaces that are not shop primed.
3. Clean surfaces to remove loose rust, mill scale, and other foreign substances by commercial sand blasting; SSPC SP 6.
4. Prime surfaces.

3.3 INSTALLATION

A. According to AWWA C508 and manufacturer instructions.

B. Dielectric Fittings: Provide between dissimilar metals.

3.4 FIELD QUALITY CONTROL

A. Inspection:

1. Inspect for damage to valve lining or coating and for other defects that may be detrimental as determined by Engineer/Engineer.
2. Repair damaged valve or provide new, undamaged valve.
3. After installation, inspect for proper supports and interferences.

B. Pressure test valves with piping.

3.5 CLEANING

A. Keep valve interior clean as installation progresses.

B. After installation, clean valve interior of soil, grit, loose mortar, and other debris.

END OF SECTION 400565.23

© 2023 CDM Smith
All Rights Reserved

This page intentionally left blank.

© 2023 CDM Smith
All Rights Reserved

SECTION 400567.39 - PRESSURE-RELIEF VALVES

PART 1 - GENERAL

1.1 RELATED DOCUMENTS

A. Drawings and general provisions of the Contract, including General and Supplementary Conditions and Division 01 Specification Sections, apply to this Section.

1.2 SUMMARY

A. Section Includes:

1. Spring-loaded pressure-relief valves (Pressure Relief Valve).
   Note: Weight-loaded pressure-relief valves and hydrostatic pressure-relief valves will not be accepted.

B. Related Requirements:

1. Section 400551 “Common Requirements for Process Valves”.

1.3 COORDINATION

A. Coordinate Work of this Section with installation of process tanks and/or piping.

1.4 ACTION SUBMITTALS

A. Section 400551 “Common Requirements for Process Valves”.

B. Product Data: Submit manufacturer catalog information.

C. Shop Drawings: Indicate materials, size, accessories, and other information to demonstrate conformance to specifications.

1.5 INFORMATIONAL SUBMITTALS

A. Manufacturer's Certificate: Certify products meet or exceed specified requirements.

B. Manufacturer Instructions: Submit special procedures and setting dimensions.

C. Source Quality-Control Submittals: Indicate results of factory tests and inspections and provide required certifications.

D. Field Quality-Control Submittals: Indicate results of Contractor-furnished tests and inspections.

E. Qualifications Statement:

1. Submit qualifications for manufacturer.

F. American Iron and Steel (AIS): Submit certification indicating compliance with AIS requirements.

1.6 CLOSEOUT SUBMITTALS

A. Project Record Documents: Record actual locations of pressure-relief valves.

1.7 QUALITY ASSURANCE

A. Materials in Contact with Potable Water: Certified to NSF Standards 61 and 372.

1.8 QUALIFICATIONS

A. Manufacturer: Company specializing in manufacturing products specified in this Section with minimum five years' documented experience.

1.9 DELIVERY, STORAGE, AND HANDLING

A. Section 400551 “Common Requirements for Process Valves”.

B. Inspection: Accept materials on Site in manufacturer's original packaging and inspect for damage.

C. Store materials according to manufacturer instructions.

D. Protection:

1. Protect materials from moisture and dust by storing in clean, dry location remote from construction operations areas.
2. Furnish temporary end caps and closures on piping and fittings and maintain in place until installation.
3. Provide additional protection according to manufacturer instructions.

PART 2 - PRODUCTS

2.1 PRESSURE-RELIEF VALVES, SPRING LOADED - Tag Type PRV

A. Manufacturers:

1. APCO: Model 3000A.
2. Golden Anderson:
3. Ross: RWR.

4. Substitutions: Or equal.

B. Description:

1. Size: As indicated in plans.
2. Spring opposed, angle-pattern design with adjustable relief pressure and locking nut.
3. Performance and Design Criteria:

a. Flow Capacity: 2.88 mgd at 130 psig pressure setting.
b. Pressure Rating 150 psig.
c. Pressure Setting Available Range: 20 psig.
d. Closure time: 5sec min.

4. Materials:

a. Body: Ductile iron.
b. Trim: Type 316 stainless steel.
c. Spring: ASTM A125 steel and isolated from process flow.
d. Seat: EPDM, NPR.
e. Lining: Fusion-bonded epoxy.

5. End Connection: Flanged.

2.2 SOURCE QUALITY CONTROL

A. Provide shop inspection and testing of completed assembly.

B. Certificate of Compliance:

1. If manufacturer is approved by authorities having jurisdiction, submit certificate of compliance indicating Work performed at manufacturer's facility conforms to Contract Documents.
2. Specified shop tests are not required for Work performed by approved manufacturer.

PART 3 - EXECUTION

3.1 EXAMINATION

A. Verify that field dimensions are as indicated on Shop Drawings.

3.2 PREPARATION

A. Thoroughly clean end connections before installation.

B. Cleaning: Clean surfaces to remove foreign substances.

3.3 INSTALLATION

A. According to manufacturer instructions and local code requirements.

B. Repair damaged coatings with material equal to original coating.

C. Section 400551 “Common Requirements for Process Valves”.

D. Installation Standards: Install Work according to City of Georgetown Standards.

3.4 FIELD QUALITY CONTROL

A. Testing: Test each valve for leak tightness at 75 percent of set point according to API 2000.

B. After installation, inspect for interferences and proper supports.

C. Repair damaged coatings with material equal to original coating.

3.5 CLEANING

A. Keep interior of valves clean as installation progresses.

3.6 DEMONSTRATION

A. Demonstrate equipment startup, shutdown, routine maintenance, and emergency repair procedures to Owner's personnel.

END OF SECTION 400567.39

© 2023 CDM Smith
All Rights Reserved

SECTION 400578.29 - COMBINATION AIR VALVES FOR WASTEWATER SERVICE

PART 1 - GENERAL

1.1 RELATED DOCUMENTS

A. Drawings and general provisions of the Contract, including General and Supplementary Conditions and Division 01 Specification Sections, apply to this Section.

1.2 SUMMARY

A. Section Includes: Combination air valves for wastewater treatment facilities.

B. Related Requirements:

1. Division 09: Preparing, priming, and painting surfaces, including field-applied and equipment finishing.
2. Section 400507 "Hangers and Supports for Process Piping" for anchors and supports.
3. Section 400551 "Common Requirements for Process Valves" for typical product and installation requirements for valves specified in this Section.
4. Section 404213 "Process Piping Insulation" for insulation applied to process piping systems.

1.3 RELATED DOCUMENTS

A. Drawings and general provisions of the Contract, including General and Supplementary Conditions and Division 01 Specification Sections, apply to this Section.

1.4 COORDINATION

A. Coordinate Work of this Section with installation of process piping.

1.5 ACTION SUBMITTALS

A. Section CIP10 and 013300 “Submittal Procedures”: Requirements for submittals.

B. Shop Drawings: Indicate materials, dimensions, weights, and end connections on assembly drawings.

1.6 INFORMATIONAL SUBMITTALS

A. Manufacturer's Certificate: Certify that products meet or exceed specified requirements.

B. Product Data: Submit manufacturer catalog information.

C. Manufacturer Instructions: Submit special procedures and setting dimensions.

D. Source Quality-Control Submittals: Indicate results of factory tests and inspections.

E. Field Quality-Control Submittals: Indicate results of Contractor-furnished tests and inspections and provide required certifications.

F. Manufacturer Reports: Certify that equipment has been installed according to manufacturer instructions.

G. Qualifications Statements:

1. Submit qualifications for manufacturer and installer.
2. Submit manufacturer's approval of installer.

1.7 CLOSEOUT SUBMITTALS

A. Project Record Documents: Record actual locations of combination air valves.

1.8 QUALITY ASSURANCE

A. Manufacturer Quality Management System: Certified to ISO 9001.

1.9 QUALIFICATIONS

A. Manufacturer: Company specializing in manufacturing products specified in this Section with minimum five years' documented experience.

1.10 DELIVERY, STORAGE, AND HANDLING

A. Inspection: Accept materials on Site in manufacturer's original packaging and inspect for damage.

B. Store materials according to manufacturer instructions.

C. Protection:

1. Protect materials from moisture and dust by storing in clean, dry location remote from construction operations areas.
2. Furnish temporary end caps and closures on piping and fittings and maintain in place until installation.
3. Provide additional protection according to manufacturer instructions.

1.11 FIELD CONDITIONS

A. Field Measurements:

1. Verify field measurements prior to fabrication.
2. Indicate field measurements on Shop Drawings.

1.12 WARRANTY

A. Upon completion of installation (in accordance with approved installation manuals) and successful start-up and upon acceptance by the Owner; provide valve and appurtenance warranties in compliance with CIP 16, Warranty

PART 2 - PRODUCTS

2.1 COMBINATION AIR VALVES FOR WASTEWATER SERVICE – Tag Type CAV

A. Manufacturers: Provide products by one of the following or equal:

1. APCO model 440 SCAV/DAT.
2. GA Industries.
3. Val-Matic

B. Description:

1. Type:

   a. Fully automatic, float operated.
   b. Body: Single.

2. Comply with AWWA C512.
3. Size: As indicated on Drawings.
4. Suitable for sewage service.
5. Provide with flushing capabilities.
6. Working Pressure: 85 psi
7. Rated Pressure: 150 psi
8. Combination air valves:

   a. Perform the functions of an air/vacuum valve (exhaust large quantities of air on start-up, admits air on shut-down) and air release valves (release air continuously during operation) to maintain system efficiency and prevent pipeline surges.

C. Materials:

1. Body and Cover: Cast iron, ASTM A126 , Ductile Iron ASTM 536
2. Float: Stainless steel.
3. Seats: Buna-N.
4. Seals: Buna-N.
5. Hardware: Stainless steel.

D. End Connections - Single Body:

1. Size 3 Inches and Smaller:

a. Threaded, NPT.
b. 1-Inch Valves: Furnish 2-inch inlet.

2. Backwash Accessories: Furnish two additional NPT connections.

E. Valve Body Connections:

1. Threaded, NPT.
2. Cleanout: 2 inches.
3. Drain: 1 inch.

F. Accessories:

1. Backwash accessories, including inlet shutoff valve, blowoff valve, rubber supply hose, and quick-disconnect couplings.
2. Furnish double acting throttling device set to 5% open with locking nut.

2.2 INSULATION

A. As specified in Section 404213 “Process Piping Insulation.”

2.3 FINISHES

A. Prepare piping appurtenances for field finishes as specified in Section 099100 “Painting.”

2.4 SOURCE QUALITY CONTROL

A. Provide shop inspection and testing of completed assembly.

B. Certificate of Compliance:

1. If fabricator is approved by authorities having jurisdiction, submit certificate of compliance indicating Work performed at fabricator's facility conforms to Contract Documents.
2. Specified shop tests are not required for Work performed by approved fabricator.

PART 3 - EXECUTION

3.1 EXAMINATION

A. Verify that field dimensions are as indicated on Shop Drawings.

B. Inspect existing flanges for nonstandard bolt hole configurations or design and verify that new pipe and flanges mate properly.

3.2 PREPARATION

A. Thoroughly clean end connections before installation.

B. Close pipe and equipment openings with caps or plugs during installation.

C. Cleaning: Clean surfaces to remove foreign substances.

3.3 INSTALLATION

A. According to manufacturer's instructions.

B. Provide access for operation, removal, and maintenance, and to avoid discharge to occupied areas or other equipment.

C. Vent valve properly and pipe outlet to nearest drain or as directed by Engineer.

3.4 FIELD QUALITY CONTROL

A. Inspect for interferences and proper supports.

B. Testing:

1. As specified in Section 400551 "Common Requirements for Process Valves."
2. Demonstrate operation without undue noise or vibration.

C. Manufacturer Services: Furnish services of manufacturer's representative experienced in installation of products furnished under this Section for not less than 1 day (8 hour**s)** on Site for installation, inspection, startup, field testing, and instructing Owner's personnel in operation and maintenance of equipment.

D. Equipment Acceptance:

1. Adjust, repair, modify, or replace components failing to perform as specified and rerun tests.
2. Make final adjustments to equipment under direction of manufacturer's representative.
3. Repair damaged coatings with material equal to original coating.

E. Furnish installation certificate from equipment manufacturer's representative attesting that equipment has been properly installed and is ready for startup and testing.

3.5 CLEANING

A. Keep interior of air release valves clean as installation progresses.

END OF SECTION 400578.29

© 2023 CDM Smith
All Rights Reserved

This page intentionally left blank.

© 2023 CDM Smith
All Rights Reserved

SECTION 400593.23 – LOW-VOLTAGE MOTOR REQUIREMENTS FOR PROCESS EQUIPMENT

PART 1 - GENERAL

1.1 RELATED DOCUMENTS

A. Drawings and general provisions of the Contract, including General and Supplementary Conditions and Division 01 Specification Sections, apply to this Section.

1.2 SUMMARY

A. Section Includes:

1. Single- and three-phase motors for application on process equipment provided under other Sections.

B. Manufacturer of driven equipment shall provide associated motor.

C. Related Requirements:

1. Section 260526, “Grounding and Bonding for Electrical Systems”.
2. Section 260553, “Identification for Electrical Systems”.

1.3 DEFINITIONS

A. NETA ATS: Acceptance Testing Specification.

B. VFC: Variable-frequency motor controller. See VFD.

C. VFD: Variable-frequency drive. Used interchangeably with the term VFC.

1.4 ACTION SUBMITTALS

A. Product Data: For each type and rating of motor indicated.

1. Include construction details, material descriptions, dimensions, profiles, and finishes.
2. Include nameplate data, compliance with specified standards, electrical ratings and characteristics, physical dimensions, frame size, weights, mechanical performance data, support points and the following:

a. Descriptive bulletins, including full description of insulation system.
b. Bearing design data.
c. Efficiency at 1/2, 3/4 and full load.
d. Power factor at 1/2, 3/4 and full load.
e. Conduit entry points and sizes.
f. Special features and accessories, i.e., space heaters, temperature detectors, etc.

g. Power factor correction capacitor rating and type (when required).

B. Manufacturer's Certificate: Certify that products meet or exceed specified requirements.

C. Qualifications Statements:

1. Submit qualifications for manufacturer and testing agency.

1.5 QUALITY ASSURANCE

A. Electric motors driving identical equipment shall be identical.

B. Motors shall be listed under UL recognized component file as applicable.

C. Motor manufacturer to maintain a documented ISO 9001 quality assurance program implementing suitable procedures and controls to monitor all aspects of production and testing.

D. When electrically driven equipment differs from that indicated, adjust the motor size, wiring and conduit systems, disconnect devices, and circuit protection to accommodate the equipment installed.

E. Testing Agency Qualifications: Member company of NETA.

1.6 DELIVERY, STORAGE AND HANDLING

A. Ship motor fully assembled, capable of being lifted in one piece. Comply with Section 016000, "Product Requirements" for transporting, handling, storing, and protecting products.

B. Inspection: Accept materials on site in manufacturer's original packaging and inspect for damage.

C. Storage:

1. Store materials according to manufacturer instructions.
2. Energize motors furnished with space heaters to prevent condensation throughout the storage and construction period. Perform periodic motor insulation resistance tests per manufacturer’s storage recommendations.
3. For extended outdoor storage, remove motors from equipment and store separately.
4. Maintain bearings during storage and construction period, and periodically rotate the motor shaft per manufacturer’s storage recommendations.
5. Lubricate per manufacturer’s recommendations and inspect purged grease for water, rust, or other contaminants.

D. Protection:

1. Protect materials from moisture and dust by storing in clean, dry location remote from construction operations areas.
2. Provide additional protection according to manufacturer instructions.

1.7 WARRANTY

A. Special Warranty: Manufacturer agrees to repair or replace components of motors that fail in materials or workmanship within specified warranty period.

1. Warranty Period - Inverter Duty Motors: Three years from date of Substantial Completion.
2. Warranty Period - Constant Speed Severe-Duty Motors: Five years from date of Substantial Completion.

PART 2 - PRODUCTS

2.1 MANUFACTURERS

A. Acceptable Manufacturers: Provide products by one of the following or equal:

1. Nidec (US Motors).
2. ABB (Baldor-Reliance).
3. TECO-Westinghouse.
4. Toshiba.
5. WEG.
6. General Electric.

2.2 GENERAL MOTOR REQUIREMENTS

A. Comply with requirements in this Section except when stricter requirements are specified in equipment schedules or Sections.

B. Comply with the latest revision of the following as applicable:

1. NEMA MG 1, “Motors and Generators”.
2. IEEE 841 for TEFC motors where driven equipment specification indicates equipment requires motors to be severe-duty, chemical duty, or mill duty.

C. Unless otherwise noted, rate motors as follows:

1. Motors below 1/2 horsepower: 115/230 Volt, single phase, 60 Hertz A.C.
2. Motors 1/2 through 100 horsepower: 230/460 Volt, three-phase, 60 Hertz A.C.
3. Motors 125 horsepower and above: 460 Volt, three-phase, 60 Hertz.

D. Duty: Continuous duty at ambient temperature of 40 deg C and at altitude of 3,300 feet above sea level.

E. Capacity and Torque Characteristics: Sufficient to start, accelerate, and operate connected loads at designated speeds, at installed altitude and environment, with indicated operating sequence, and without exceeding nameplate ratings or considering service factor.

F. Horsepower Rating: Size for operation within the full load nameplate rating without applying the service factor, throughout the full range of mechanical or hydraulic operating condition.

G. Specific motor application data such as Hp, rpm, enclosure type, accessories, etc., are specified under the detailed driven mechanical equipment specification.

H. Nameplates: Engrave or emboss on Type 316 stainless steel fastened to the motor frame with stainless steel screws or drive pins with information per NEMA MG 1.

I. Space heater: Include 120-volt space heater for moisture control on all motors rated 50 horsepower and larger.

J. Service Factor: 1.15 service factor on sine wave power and 1.0 service factor on VFD power in a 40 degrees C ambient, unless otherwise noted.

K. Motors and Accessories: Listed and labeled as defined in NFPA 70, by a qualified testing agency, and marked for intended location and application.

L. Enclosures: Conform to one of the NEMA standard enclosure designs as specified under the detailed driven mechanical equipment specification. If no enclosure type is specified, provide TEFC (Totally Enclosed Fan Cooled) enclosures.

M. Motors connected to VFCs: Inverter duty rated and comply with NEMA MG 1, Part 31. First or second torsional critical speed shall be outside the operating speed range for all VFC controlled motors.

N. Three-phase motors:

1. Description: NEMA MG 1, Design B, medium induction motor.
2. Efficiency: Meet or exceed requirements for NEMA MG 1, Part 12 for Premium Efficient motors 1 HP and larger.
3. Service Factor: 1.15.
4. Multispeed Motors: Variable torque.

    a. For motors with 2:1 speed ratio, consequent pole, single winding.
    b. For motors with other than 2:1 speed ratio, separate winding for each speed.

5. Rotor: Random-wound, squirrel cage.
6. Code Letter Designation:

    a. Motors 15 HP and Larger: NEMA starting Code F or Code G.
    b. Motors Smaller Than 15 HP: Manufacturer's standard starting characteristic.

7. Accessories: Where specified herein, or under process mechanical specification.

2.3 THREE PHASE MOTOR CONSTRUCTION

A. Enclosure and Frame:

1. NEMA enclosure type as specified in the process equipment specification.
2. NEMA frame for the associated horsepower.
3. Motor Frames: Cast iron or welded heavy plate steel construction, stiff enough to withstand the rotating forces and torques generated and designed to limit or avoid any undesirable harmonic resonances.

4. Provide a threaded, forged steel, shouldered eyebolt blind tapped into the motor frame for lifting on all frames 254T and larger.
5. Condensate drain openings: Locate drain holes at the low points in the end brackets to allow removal of accumulated moisture from enclosures. Provide corrosion resistant, breather drain plugs for severe-duty motors.
6. Hardware: Hex head, SAE Grade 5 or better, plated for corrosion protection.
7. Nameplates: Engraved or embossed stainless steel plates fastened to the motor frame with stainless steel screws or drive pins. Clearly indicate all items of information listed in the applicable part of NEMA MG 1.
8. Main Terminal Box: Fabricated steel or cast iron, sized per the NEC for number and size of conduit connections and conductor bending and terminations as indicated on Drawings. Split box top to bottom with capability to rotate entry point to any quadrant. Provide gaskets between the box and motor frame and between box and its cover. Include ground lug for equipment grounding conductor termination.
9. Bearing Housings: Provide machined surfaces for attaching a magnet mounted accelerometer to monitor the motor vibration in the vertical, horizontal, and axial directions at each bearing housing.
10. Frame Grounding: Provide motor frame grounding pad or threaded stud where supplemental grounding to frame is indicated on the drawings.
11. Corrosion resistant mill and chemical duty paint.

B. Windings:

1. Copper.
2. Insulation rating: Class F.
3. Temperature rise: Class B at 1.0 SF, Class F at 1.15 SF.
4. Insulation: Non-hygroscopic, epoxy encapsulated windings for enclosure types WP I and WP II. Provide upgraded insulation by additional dips and bakes to increase moisture resistance for totally enclosed designs. Provide vacuum pressure impregnated (VPI) epoxy insulation for moisture resistance for outdoor motors.
5. Provide chemical and humidity resistance insulation system when IEEE 841 motors are specified.
6. Provide winding surge withstand capability per NEMA 1, Part 31 for VFC driven motors.
7. Provide specified temperature sensing devices for VFC driven equipment. If not specified, provide a winding temperature detector per the accessories paragraph.

C. Motor Leads: Non-wicking type, minimum Class F temperature rating and permanently numbered for identification.

D. Stator: Built up core using high grade, low loss silicon steel laminations keyed or dovetailed to the stator frame and securely held in place at each end.

E. Rotor:

1. Forged or rolled steel shaft, machined, smooth finished, with sufficient strength for operation including 25 percent overspeed condition.
2. Shaft end coordinated with driven equipment coupling.
3. Entire assembly coated with protective coating.
4. Inpro seals on both ends of the shaft to prevent grease leakage and entrance of foreign materials, such as water and dirt, into the bearing area while running, coasting, or at rest. Severe duty motors to have improved sealing per IEEE 841.

5. Vertical Motor Shafts:

    a. Provide hollow shaft and P flange mounting to allow driven shaft to extend through provide for vertical pump applications.
    b. Coupling for connecting the motor shaft to the driven shaft is located in the top of the motor.
    c. Where solid shaft is provided couple the driven shaft below the P flange face.

6. Rotor Core:

    a. Solid, built-up stack of fully processed and coated, high-grade, low-loss silicon steel laminations.
    b. Die cast aluminum or fabricated copper bars or their respective alloys.
    c. Rotors on frames 213T and above to be keyed to shaft and rotating assembly dynamically balanced.

7. Rotor Assembly:

    a. Coated with corrosion resistant epoxy insulating varnish or other protective coating, thermally stable, statically and dynamically balanced.
    b. Balance weights securely attached to the rotor resistance ring by welding or similar permanent method.

F. Horizontal Bearings: Roller type, grease lubricated.

1. Bearings: Anti-friction open or single-shield, vacuum-degassed steel ball or roller bearings, electric motor quality, designed for 45 degrees C maximum temperature rise. Metric size bearings are not acceptable.
2. Life: L 10 life of 100,000 hours for direct coupled applications and 26,000 hours for belted applications based. IEEE 841 motors, L 10 life increased to 150,000 and 50,000 hours respectively.
3. Shaft Seals: Provide to prevent grease leakage and the entrance of foreign materials, such as water and dirt, into the bearing area while running, coasting, or at rest.
4. Shaft Currents: Provide mitigation per process equipment specification.
5. Comply with ABMA and refer to process equipment specification for stricter or additional requirements.

G. Vertical Bearings: per manufacturer, thrust type.

1. Bearings: Manufacturer's standard design, constructed with thrust bearings on top to allow inspection and/or replacement without requiring complete disassembly of motor, of type and size to satisfy thrust loading requirements.
2. Life: Rated for an in-service L 10 life of 100,000 hours, designed to support the weight of the rotor plus, if required, the weight of the rotating driven equipment parts and the hydraulic thrust created by the driven equipment, with a 40 degrees C maximum temperature rise. Metric bearings are not acceptable.
3. Shaft Seals: Provide to prevent grease leakage and the entrance of foreign materials, such as water and dirt, into the bearing area while running, coasting, or at rest.
4. Shaft Currents: Provide mitigation per process equipment specification.
5. Comply with ABMA and refer to process equipment specification for stricter or additional requirements.

2.4 THREE PHASE MOTOR ACCESSORIES

A. Space Heaters: Silicone rubber strip type, accessible for inspection, rated 120 Volt, single phase, designed to prevent condensation inside the enclosure when the motor is idle, with leads brought out to a separate terminal box. Emboss heater wattage and voltage on motor nameplate.

B. Winding Temperature Switch: Three embedded bi-metallic temperature thermostat switches with normally open or normally closed per process equipment specification and leads terminating in the main conduit box.

C. Motor Shaft Currents: Insulate ODE bearing and provide a shaft grounding strap. Insulate bearing probes to prevent shorting out bearing insulation.

D. Shaft Grounding Rings: maintenance free, circumferential micro fiber type, AEGIS™ SGR by electro Static Technology or equal to discharge shaft currents to ground.

E. Vibration Sensors: Number, type, and location for motor and driven equipment per process equipment specification. Provide machined surfaces at each bearing housing for attaching a magnetic mounted accelerometer in order to monitor motor vibration in vertical, horizontal and axial directions. Coordinate with the supplier of the machine monitoring equipment.

F. Anti-Backspin Device: Provide shaft mounted, mechanical non-reverse ratchet rated at 100 percent of motor full load torque for immediate protection against reversing due to phase reversals or from backspin at shutdown.

G. Encoder for Vector Drive Motors: Provide encoder on opposite drive end to sense rotor speed and provide closed loop feedback (quadrature signal with line driver output) to a control device. Provide sufficient length of encoder cable to connect encoder to variable frequency controller.

2.5 SINGLE-PHASE MOTORS

A. Motors larger than 1/20 hp shall be one of the following, to suit starting torque and requirements of specific motor application:

1. Permanent-split capacitor.
2. Split phase.
3. Capacitor start, inductor run.
4. Capacitor start, capacitor run.

B. Multispeed Motors: Variable-torque, permanent-split-capacitor type.

C. Motors 1/20 HP and Smaller: Shaded-pole type.

D. Thermal Protection: Internal protection to automatically open power supply circuit to motor when winding temperature exceeds a safe value calibrated to temperature rating of motor insulation. Thermal-protection device shall automatically reset when motor temperature returns to normal range.

E. Insulation: Class F or better, with Class B temperature rise of 80 degrees C above ambient, 1.15 service factor. Locked rotor current to be no greater than specified in NEMA MG 1, Design "N".

F. Standard Enclosure: Fully gasketed, totally enclosed air over or fan cooled in conformance with NEMA MG 1.

G. Washdown Duty Enclosure: Where motor is installed in wet or corrosive areas routinely exposed to washdowns, high humidity or caustic chemicals, provide stainless steel, paint free washdown motors with Inpro bearing isolators, stainless steel T-type condensation drains, nitrile conduit box gasket, and corrosion resistant fans.

H. Bearings: Sealed ball bearings permanently lubricated for 10 years normal use, furnished with shaft slinger.

I. Class 1, Division 1 and 2 Locations: Explosion proof, marked with a T3B temperature code label, and UL listed for use in Class 1, Division 1, Groups C & D, and Class II, Groups E, F, & G hazardous location. The temperature code marking to appear on the nameplate.

2.6 SOURCE QUALITY CONTROL

A. Factory Testing: Prior to shipment perform manufacturer's standard tests in accordance with NEMA MG 1 and IEEE 112.

PART 3 - EXECUTION

3.1 EXAMINATION

A. Upon delivery of motor and prior to unloading, inspect equipment for damage.

B. Comply with DELIVERY, STORAGE, AND HANDLING article within this Section.

3.2 INSTALLATION

A. Prepare rigid foundation or mounting surface to minimize vibration and maintain alignment between motor and load shaft.

B. Install motors per manufacturer's installation instructions.

C. Anchor motor base to load bearing surface with grade 5 steel bolts or better.

D. Align motor shaft with driven equipment according to manufacturer's written instructions. Adjust axial position of motor frame with respect to load shaft.

E. Accurately adjust flexible couplings for direct drive according to machine manufacturer's guidelines. Check alignment to minimize vibrations. Coupling spacing shall be according to coupling manufacturer guidelines.

F. Install motor branch circuit conduits and conductors in accordance with NEC and local code requirements. Connect motors to rigid conduit system by a short section of liquid-tight flexible conduit to isolate conduit system from motor vibration. Where motors are installed outdoors, bring conduit into bottom of motor terminal box to avoid standing water at connection point.

G. Terminate motor leads as shown on connection diagrams using products intended for vibration applications.

H. Ground equipment according to Section 260526, “Grounding and Bonding for Electrical Systems.”

I. Tighten electrical connections and terminals according to manufacturers' published torque values.

J. Install conduit and wiring between motor auxiliary devices and associated indicators, controllers and protective devices in accordance to installation drawings.

K. Connect devices sensitive to electromagnetic interferes such as RTD's, thermistors, thermal protector switches, vibration sensors with shielded instrumentation wiring per installation drawings.

L. Comply with NECA 1.

M. Seismic Bracing: Comply with requirements specified in Section 260548.16 "Seismic Controls for Electrical Systems."

3.3 IDENTIFICATION

A. Comply with requirements for identification specified in Section 260553, "Identification for Electrical Systems." Identify field-installed conductors, interconnecting wiring, and components.

3.4 PROTECTION

A. Temporary Heating: Apply temporary heat to maintain temperature according to manufacturer's written instructions until motors are ready to be energized and placed into service.

B. Lubrication and Shaft Rotation: Lubricate parts and rotate shaft periodically according to manufacturer’s written instructions until motors are ready to be energized and placed into service.

3.5 FIELD QUALITY CONTROL

A. Perform inspections and tests Inspect and test according to the Inspection and Test Procedures for Rotating Machinery state in NETA Acceptance Testing Specification paragraph 7.15.1. Options tests are not required unless called for within the process equipment specification.

B. Perform the following infrared (thermographic) scan tests and inspections, for all motors 250 hp and larger, and prepare reports:

1. Initial Infrared Scanning: After Substantial Completion, but not more than 60 days after Final Acceptance, perform an infrared scan of each motor exterior for detection of hot spots in stator or bearings.
2. Follow-up Infrared Scanning: Perform an additional follow-up infrared scan of each motor 11 months after date of Substantial Completion.
3. Instruments and Equipment: Use an infrared scanning device designed to measure temperature or to detect significant deviations from normal values. Provide calibration record for device.

C. Test and adjust controls, remote monitoring, and safeties. Replace damaged and malfunctioning controls and equipment.

D. Motors will be considered defective if they do not pass tests and inspections.

E. Prepare test and inspection reports, including a certified report that identifies the motor and describes scanning results. Include notation of deficiencies detected, remedial action taken, and observations made after remedial action.

3.6 STARTUP AND ADJUSTMENT

A. Complete installation and startup checks' according to manufacturer's written instructions. Confirm motor is structurally, mechanically, and electrically ready for start-up. Checks include support system, vibration isolation, alignment, lubrication system, and cleanliness.

B. Start-up motor in accordance with process equipment specification.

C. Verify correct phase rotation at motor with driven equipment uncoupled. Correction for phase rotation to be made in the motor terminal box.

D. Prepare inspection and test reports.

3.7 DEMONSTRATION / SYSTEM FUNCTION TESTS

A. Run motor for system testing as required in motor controller and driven equipment specifications.

B. Confirm correct operation of all protective and metering devices.

C. Measure voltage and motor running current and evaluate relative to load conditions and nameplate full load amperes. Corrective action is required for any current imbalance 10 percent or greater.

D. Prepare driven equipment system testing report. Include results of all tests and check made, meter readings and recordings, and summary adjustments made. Clearly identify any discrepancies and concerns.

END OF SECTION 400593.23

© 2023 CDM Smith
All Rights Reserved

SECTION 406100 - PROCESS CONTROL AND ENTERPRISE MANAGEMENT SYSTEMS GENERAL PROVISIONS

PART 1 - GENERAL

1.1 RELATED DOCUMENTS

A. Drawings and general provisions of the Contract, including General and Supplementary Conditions and Division 01 Specification Sections, apply to this Section.

1.2 SUMMARY

A. Section includes procurement of the services of a Process Control System Supplier (PCSS) to provide all materials, equipment, labor, and services required to achieve a fully integrated and operational system as specified herein, in "Related Requirements" under this Article, and in related drawings, except for those services and materials specifically noted.

B. Under this contract, the PCSS will also serve as the Applications Engineer System Supplier (AESS).

C. Provide a new RTU panel at Cedar Breaks lift station site containing:

1. Allen Bradley CompactLogix PLC and associated I/O as specified under section 406343 "Programmable Logic Controllers".
2. Control Panel equipment and appurtenances as specified under section 406717 "Industrial Enclosures".
3. Radio and cabling to antenna as specified under Section 406650 "Radio Telemetry Equipment".
4. Yagi Radio Antenna specified under section 406663 "Antennas".
5. A pole for radio antenna to be provided at the Cedar Breaks lift station. A minimum 10 ft pole must be provided for the antenna, and it shall be installed such that there is a clear line of sight to Cedar Break elevated storage tank radio antenna. Final height of antenna to be determined in accordance with a radio path study recommendation during construction. Refer to section 406666 "Monopoles and Towers" and drawings for more details.
6. Lightning protection shall be provided in accordance with Division 26.
7. RTU at Cedar Breaks lift station will communicate to the Cedar Break EST over radio communication. Cedar Break EST will receive and transmit signals of the Cedar Breaks lift station to the city central plant SCADA system via Cedar Break EST radio system.

D. Provide a new RTU control panel at the DB Wood lift station site containing:

1. Allen Bradley CompactLogix PLC and associated I/O as specified under section 406343 "Programmable Logic Controllers".
2. Control Panel equipment and appurtenances as specified under section 406717 "Industrial Enclosures".

3. Radio and cabling to antenna as specified under Section 406650 “Radio Telemetry Equipment”.
4. Yagi Radio Antenna specified under section 406663 “Antennas”.
5. At a minimum, provide 30-foot tower for radio antenna to be provided at the DB Wood lift station and it shall be installed such that there is a clear line of sight to Cedar Break elevated storage tank radio antenna. Final height of tower to be determined by the supplier/contractor and to be in conformance with the radio survey during construction. Refer to section 406666 “Monopoles and Towers” and drawings for more details.
6. Lightning protection shall be provided in accordance with Division 26.
7. RTU at DB Wood lift station will communicate to the Cedar Break EST over radio communication. Cedar Break EST will receive and transmit signals of the DB Wood lift station to the city central plant SCADA system via Cedar Break EST radio system.

E. For the existing Cedar Break elevated storage tank RTU panel. Provide the following services:

1. Radio and cabling to antenna as specified under Section 406650 “Radio Telemetry Equipment”.
2. Omni Radio Antenna as specified under section 406663 “Antennas”.
3. A pole for radio antenna to be provided at the existing Cedar Break elevated storage tank. A minimum 10 ft pole must be provided for the antenna, and it shall be installed such that there is a clear line of sight to Cedar Break and DB Wood lift stations radio antennas. Final height of antenna to be determined in accordance with a radio path study recommendation during construction. Refer to section 406666 “Monopoles and Towers” and drawings for more details.

F. Provide the following programming services:

1. Program the new PLCs at the Cedar Breaks and DB Wood lift stations as specified under section 406196 “Process Control Descriptions”.
2. Integrate and provide programming modification to the existing City Central Plant SCADA system with assistance of the city to accommodate and add signals from the Cedar Breaks and DB Wood lift stations. Confirm signals from both pump stations are received at City Central and can be monitored at SCADA as specified under section 406196 “Process Control Descriptions”.
3. Provide HMI programming modification to the existing City HMI SCADA system (Wonderware Intouch HMI Version 2020) to add signals from the Cedar Breaks and DB Wood lift stations as specified under section 406196 “Process Control Descriptions”. PCSS to follow the current HMI programming standards in terms of tagging, graphics development and alarming for the city of Georgetown and coordinate with the City for HMI addressing and testing of the SCADA screens developed as part of this project. The HMI system is located at Georgetown municipal complex.

G. Provide field instruments for Cedar Breaks and DB Wood lift stations as specified under Section 407000 “Instrumentation for Process Systems”. Signals from Instruments must be wired as shown on the drawings.

H. Provide all field instrumentation power and signals surge suppression. The PCSS must provide surge suppression at panels, in the field, and at the device for each instrument provided under this contract.

I. Include auxiliary and accessory devices necessary for system operation or performance, such as transducers, relays, signal amplifiers, intrinsic safety barriers, signal isolators, software, and drivers to interface with existing equipment or equipment provided by others under other Sections of these specifications, whether indicated on the Drawings or not.

J. All equipment and installations to satisfy applicable Federal, State, and local codes. Refer to Electrical drawings for area classifications for Class and /Division ratings.

K. Use the equipment, instrument, and loop numbering scheme indicated on the Drawings and in the specifications in the development of the submittals. Do not deviate from or modify the numbering scheme.

L. Equipment must be fabricated, assembled, installed, and placed in proper operating condition in full conformity with the project Specifications, Drawings, engineering data, instructions, and recommendations of the equipment manufacturer as approved by the Engineer.

M. In order to ensure compatibility among all equipment, it must be the responsibility of the PCSS to coordinate and field verify all interface requirements with mechanical and electrical subcontractors and furnish any signal isolation devices that might be required.

N. Coordinate, and schedule all required testing and training with Owner, Engineer, General Contractor, and affected subcontractors.

O. Coordinate the Control System for proper operation with related equipment and materials furnished by other suppliers under other sections of these Specifications. Should any coordination issues arise with the PCSS, resolve and ensure proper coordination between the PCSS and other manufacturer-supplied equipment.

P. Provide supervision of all field-wiring terminations associated with the instrumentation. Electrical subcontractor must provide all conduit and wiring between field devices, PLC cabinets, etc.

Q. Provide communications network as shown on Drawings, including but not limited to all necessary ancillary equipment, all associated protocol converters, and twisted pair media equipment. Provide all necessary ancillary equipment whether or not it is shown on Drawings.

R. Provide coordination with General Contractor and electrical subcontractor to review the conduit and/or raceway layout and construction sequencing prior to installation and review these layouts with the cable manufacturers to ensure conduit and/or raceway compatibility with the systems and materials being furnished.

S. Related Requirements:

1. Section 406121.20 “Process Control System Testing”.
2. Section 406126 “Process Control System Training”.
3. Section 406196 “Process Control Descriptions”.
4. Section 406343 “Programmable Logic Controllers”.
5. Section 406613 “Switches and Routers”.
6. Section 406650 “Radio Telemetry Equipment”.
7. Section 406663 “Antennas”.
8. Section 406666 “Monopoles and Towers”.

9. Section 406717 “Industrial Enclosures”.
10. Section 406733 “Panel Wiring”.
11. Section 406763 “Control Panel Mounted UPS”.
12. Section 406866 “Configuration of Controller Software”.
13. Section 406863 “Configuration of HMI Software”
14. Section 407000 “Instrumentation for Process Systems”.

1.3 DEFINITIONS

A. Process Control System Supplier (PCSS): Entity responsible for providing all materials, equipment, labor, and services required to achieve a fully integrated and operational control system.

B. Applications Engineering System Supplier (AESS): Entity who provides all programming, configuration, and related services for the control system equipment provided by the PCSS.

C. Maintenance of Plant Operations (MOPO): A construction plan which prevents or limits process disruptions during construction.

D. Leadership in Energy and Environmental Design (LEED): A green building certification indicating that a building was designed and constructed to be environmentally responsible and use resources efficiently.

1.4 ACTION SUBMITTALS

A. Product Data: For each type of product.
   1. Include construction details, material descriptions, dimensions of individual components and profiles, and finishes for each type of product presented in the contract drawings and specifications.
   2. Include rated capacities, operating characteristics, electrical characteristics, and furnished specialties and accessories.

B. Shop Drawings:

   1. Include plans, elevations, sections, mountings, and attachment details.
   2. Include details of equipment assemblies. Indicate dimensions, weights, loads, required clearances, method of field assembly, components, and location and size of each field connection.
   3. Detail fabrication and assembly of control equipment, control panels, and instrumentation as specified herein.

   4. Include diagrams for power, signal, and control wiring.

C. Qualifications Submittal:

   1. For non-listed PCSS submit, within 30 calendar days after Notice to Proceed, detailed information on staff and organization to indicate compliance with the Quality Assurance requirements of this Section. The Qualifications submittal is required to be submitted and approved before any further submittals will be accepted. Failure to meet the minimum

requirements is grounds for rejection as a PCSS. The Qualifications Submittal to contain the following:

Copies of ISA CCST Level 1 certificates for all field technicians or resumes demonstrating field experience.

Notarized statement from the firm's financial institution demonstrating ability for the firm to meet the obligations necessary for the performance of the work.

Copy of UL-508 certificate for panel fabrication facilities.

Project references for water or wastewater projects as defined in the "Quality Assurance" paragraphs.

Documentation to demonstrate the ability to complete this project including resumes of key staff, financial capacities, details on engineering, design, fabrication, and field service capacity, and location of staff responsible for responding to the site within four hours to resolve startup issues.

D. Project Plan, Deviation List, and Schedule Submittal:

1. Submit, within 45 calendar days after Notice to Proceed, a Project plan. Submit for approval the Project Plan before further submittals are accepted. The Project Plan to contain the following:

Overview of the proposed control system describing the understanding of the project work, a preliminary system architecture drawing, interfaces to other systems, schedule, startup, and coordination. Include a general discussion of startup, (maintaining plant operations during system transition), approach to testing and training, and other tasks as required by these specifications.

Preliminary list of HMI software, PLC software, and PLC hardware, including version numbers, solely to determine compliance with the requirements of the Contract Documents prior to beginning development of system programming. The review and approval of software and hardware systems as part of this Project Plan stage does not relieve the PCSS of meeting all the functional and performance requirements of the system as specified herein. Substitution of manufacturer or model of these systems after the submittal is approved is not allowed without Engineer's approval.

Project personnel and organization including the PCSS project manager, project engineer, and lead project technicians. Include resumes of each of these individuals and specify in writing their commitment to this project. These do not need to be submitted again if already submitted in the Qualification submittal.

Sample formats of the shop drawings to be submitted and in conformance with the requirements of the Specifications. At a minimum include samples of panel fabrication drawings, control system architecture and I/O wiring diagrams.

2. Define Exceptions to the Specifications or Drawings in a Deviation List consisting of a paragraph-by-paragraph review of the Specifications indicating acceptance or any proposed deviations, the reason for exception, the exact nature of the exception and the proposed substitution so that an evaluation may be made by Engineer. Specifically state if no exceptions are taken to the specifications or drawings. If there is no statement by the PCSS, then it is acknowledged that no exceptions are taken.

3. PCSS is required to prepare a project schedule in Gantt chart format clearly showing task linkages for all tasks and identifying critical path elements. PCSS schedule is based on General Contractor schedule and meets all field installation, testing, and start-up milestones in that schedule. The project schedule illustrates I&C related major project milestones including the following:
4. PCSS must coordinate their work with General Contractor's overall schedule. PCSS schedule incorporates all PCSS milestones including but not limited to the following:

Schedule for all subsequent project submittals. Include the time required for Contractor's submittal preparation, Engineer's review time, and a minimum of two complete review cycles.

Proposed dates for all project coordination meetings.

Hardware purchasing, fabrication, and assembly (following approval of related submittals).

Software purchasing and configuration (following approval of related submittals).

Shipment of instrument and control system equipment.

Installation of instrument and control system equipment.

Testing: Schedule for all testing.

Schedule for system cutover, startup, and/or going on-line for each major system. At a minimum include the schedule for each process controller and HMI server/workstation provided under this Contract.

Schedule for all training including submittal and approval of O&M manuals, factory training, and site training.

Listing of all major graphics and PLC programs intended to be created or modified for this project. Indicate if graphic or program is new or existing.

Arrange project schedule to accommodate requirements of AESS to develop, test, troubleshoot, and train Owner on PLC and HMI systems. Timing of these coordination efforts to be determined by PCSS; however, include all necessary costs to accommodate the following minimum time slots in their overall project schedule. Exclude on all time allotments any legal holidays, or days lost due to delays caused by Contractor or PCSS.

Deliver detailed I/O listing to the AESS as specified herein.

Deliver early development system to the AESS: 45 calendar days after Contract Award.

Initial training on PLC programming and HMI configuration: 45 calendar days after Contract Award.

Completion of AESS's Application Software Test at PCSS's facility: Twenty-one calendar days after successful completion and acceptance by Engineer of PCSS's Unwitnessed Factory Test and Witnessed Factory Tests.

Completion of AESS's Application Software Operational Readiness Tests: Twenty-one calendar days after successful completion and acceptance by the Engineer of PCSS's operational readiness testing.

Completion of AESS's Functional Acceptance Tests: Twenty-one calendar days after successful completion and acceptance by the Engineer of PCSS's functional acceptance testing.

Completion of Training on PLC and HMI equipment: Twenty-one calendar days after successful completion and acceptance by the Engineer of PCSS's training.

5. Component and Wiring Identification and Tagging Plan:

All components provided by PCSS require a tag, label, or nameplate. Review specifications and provide a drawing indicating the tagging and labeling scheme used by the PCSS:

Instruments.

Panel Hardware.

Standalone hardware or communication equipment.

Wires and communication cables.

Provide detailed information so Engineer can review the following characteristics for each type of tag, label, or nameplate for the different types of components provided above:

Size or range of size of the tag, label, or nameplate.

Font style.

Material.

Color(s).

E. Input/Output (I/O) List Submittal:

1. Submit, within 60 days after Notice to Proceed, a complete system Input/Output (I/O) address list for equipment connected to the control system under this Contract.
2. Base the I/O list on the P&ID's, the Drawings, the design I/O list (if included), and requirements in the Specifications.
3. Submit the I/O list in both a Microsoft Excel readable electronic file format and an 8-1/2 inch by 11-inch hard copy.
4. Reflect all active and spare I/O points on the I/O list. Add points to accommodate spare I/O's as required in the specifications.
5. Arrange the I/O list so that each control panel has a dedicated worksheet, which includes the following information:

TAG NUMBER(S): As indicated on Drawings, the identifier assigned to a device that performs a function in the control system. As part of this information, break out the tag loop number to allow for sorting by loop.

DESCRIPTION: A description of the function of the device (text that includes signal source, control function, etc.) Include the text "Spare Points" for all I/O module points that are not connected to equipment.

PHYSICAL LOCATION: The Control Panel designation of where the I/O point is wired to.

PHYSICAL POINT ADDRESS: Rack, Slot, and Point (or Channel) assignment for each I/O point.

I/O TYPE: Use DO - Discrete Output, DI - Discrete Input, AO - Analog Output, AI - Analog Input, PI - Pulse Input, or PO - Pulse Output.

RANGE/STATE: The range in engineering units corresponding to an analog 4-20 mA signal, or, the state at which the value of the discrete points is "1."

ENGINEERING UNITS: The engineering units associated with the Analog I/O.

ALARM LIMITS: Include alarm limits based on the control descriptions and Drawings.

P&ID - the P&ID or drawing where the I/O point appears on. Mark as "NA" (Not Applicable) if the I/O point is derived from a specification requirement and is not on the P&IDs.

LOGICAL POINT ADDRESS: I/O address of each point.

EXISTING or NEW I/O POINT: Indicate if point is existing (E) or new (N).

CONDITION OF EXISTING SIGNAL: Condition of existing I/O signals to be noted as functional (F) if working properly or if not functioning (NF) with issue described.

6. Sort the I/O list in order by:

Physical location.

I/O Type.

Loop Number.

Device Tag.

7. Once the I/O list is approved, the PLC I/O addresses are not to be modified without approval by Engineer.
8. For I/O layout requirements, refer to Section 406343 “Programmable Logic Controllers.”

F. Field Instruments Submittal:

1. Refer to the Instruments section 407000 “Instrumentation for Process Systems” for submittal requirements.

G. Control System Architecture, Hardware and Software Packages Submittal:

1. Refer to the sections below for equipment required as part of the Hardware and Software Packages submittal:

Section 406343 “Programmable Logic Controllers”.

Section 406613 “Switches and Routers”.

Section 406650 “Radio Telemetry Equipment”.

Section 406663 “Antennas”.

Section 406666 “Monopoles and Towers”.

Section 406717 “Industrial Enclosures”.

Section 406733 “Panel Wiring”.

Section 406763 “Control Panel Mounted UPS”.

Section 406866 “Configuration of Controller Software”.

Section 406863 “Configuration of HMI Software”

Section 407000 “Instrumentation for Process Systems”.

2. For each hardware and software packages component specified in the sections above, submit a cover page that lists date, specification number, product name, manufacturer, model number, location(s), and power required. Preferred format for the cover page is ISA-TR20.00.01-2001, general data sheet; however, other formats will be acceptable provided they contain all required information.
3. Complete system architecture drawing(s) showing in schematic form the interconnections between major hardware components including, control panels, computers, networking equipment, control panels with PLC systems and I/O modules, local operator interfaces, process equipment vendor panels with PLCs, and networked peripherals such as power monitors, security cameras, etc. PCSS is required to provide unique network architecture drawings for the following networks:

SCADA System Architecture.

4. Develop the system architecture drawing(s) in accordance with the following information and guidelines:

Show power connections to each piece of equipment or grouping of equipment with voltage and power sources noted such as 120VAC UPS battery, 24VDC battery, or 120VAC from LP (lighting panel). Indicate specific UPS number or circuit number whenever possible.

All communication cable types should be uniquely identified with a specific linetype and cable characteristics clearly indicated in a key or legend located on drawing(s). For example, 50/125-micron multimode mode fiber, or CAT6 Ethernet copper cabling. Any multiconductor communication cables will be clearly labeled above each individual communication with a note added to drawing that states if no quantity exists above a linetype, there is only one communication cable between devices. If a multi-conductor cable has multiple colors, legend to clearly indicate which colors are used for which networks (i.e., a multi-pair fiber optic cable used for dedicated networks such as SCADA, Electrical, Security, HVAC, etc.)

All communication cables need to be assigned a unique cable identification label and shown in either a table or above the communication line.

Identify network protocols for each communication path or for system indicated in a key or legend as appropriate. Examples are Allen-Bradley EtherNet/IP, Modbus TCP/IP, or DNP3.

Indicate which port or connection number the communication cable is terminating at any device that has multiple ports or connection points. For multiple devices, this could be shown once in a key or legend and noted on architecture as appropriate.

For each PLC control panel or network communication enclosure provided by PCSS, the architecture drawing clearly references other drawings provided by the PCSS for detailed panel wiring diagrams with a note near that PLC panel or communication enclosure indicating referenced drawing numbers. A placeholder is acceptable at the time of submission if these drawings are to be submitted at a later date.

Use symbology and/or icons whenever possible to represent a device and differentiate between devices that are different form factors (i.e. tower computer vs. desktop computer vs. rack mounted). Vendor CAD libraries are preferred for symbols.

Develop a diagram that will allow a qualified technician to interconnect all equipment without having to refer to additional manuals or literature.

Use a minimum sheet size of 11inch x17 inch and use of more than one sheet is acceptable with a logical breakout between sheets (i.e., head end on one sheet and plant control system on another). Clearly identify line continuations between drawings.

5. Provide a software schedule or spreadsheet for project which clearly indicates which software packages and operating systems are loaded onto which computers and servers.

H. Panel Layout Drawings and Wiring Diagrams Submittal:

1. Panel Layout Drawings: Submit Drawings for all panels specified. Draw to scale panel assembly and elevation drawings and detail all equipment in or on the panel. Use 11 inch x 17 inch sheet size for panel drawings and include the following:

Clearly indicate a legend sheet with all symbols used on drawings and with voltage, color, and size of each wire and in accordance with requirements of Section 406733 “Panel Wiring.”

Interior and exterior panel elevation drawings to scale.

Nameplate schedule & panel labels schedule.

Conduit access locations.

Panel construction details.

Cabinet assembly and layout drawings to scale. Include a bill of material on the assembly drawing with each panel component clearly defined. Cross-reference the bill of material to the assembly drawing so that a non-technical person can readily identify all components of the assembly by manufacturer and model number.

Fabrication and painting specifications including color (or color samples).

Construction details, NEMA ratings, intrinsically safe barrier information, gas sealing recommendations, purging system details, etc. for panels located in hazardous locations or interfacing to equipment located in hazardous areas.

For every control panel, heating and cooling calculations for each panel supplied indicating conformance with cooling requirements of the supplied equipment and environmental conditions. Include on calculations the recommended type of equipment required for both heating and cooling.

Submit evidence that all control panels are constructed in conformance with UL 508 and bear the UL seal confirming the construction. Specify if UL compliance and seal application accomplished at the fabrication location or by field inspection by UL inspectors. Costs associated with obtaining the UL seal and any inspections are be borne by Contractor.

2. Wiring Diagrams Submittal:

PCSS to provide complete wiring diagrams showing all wiring connections in the I/O system where direct hardwired interfaces exist between the PCSS control panels and vendor provided control panels furnished under other Divisions. This includes but is not limited to terminal block numbering, relay contact information, instruments, equipment, and control panel names. Include drawings in Final O&M submittal. Leaving this information blank on Final Documentation drawings is not acceptable.

Panel wiring diagrams depicting wiring within and on the panel as well as connections to external devices. If ISA Loop Wiring Diagrams are specified below, equipment external to the control panel and related external connections do not need to be shown on the Panel Wiring Diagrams. Panel wiring diagrams include power and signal connections, UPS and normal power sources, all panel ancillary equipment, protective devices, wiring and wire numbers, and terminal blocks and numbering. Field device wiring includes the device ISA-tag and a unique numeric identifier. Diagrams identify all device terminal points that the system connects to, including terminal points where I/O wiring lands on equipment not supplied by the PCSS. Wiring labeling used on the drawings match that shown on Contract Documents or as developed by the PCSS and approved by Engineer. I/O wiring numbered with rack number, slot number, and point number. Two-wire and four-wire equipment to be clearly identified, and power sources noted. Submit final wire numbering scheme. Provide panel drawings that are 11-inch x 17-inch in size.

I. Human Machine/Operator Interface Submittals:

1. Refer to Section 406863 “Configuration of HMI Software” for specific submittal requirements.

J. Controller Program Submittal:

1. Refer to Section 406866 “Configuration of Controller Software” for specific submittal requirements.

K. Testing Plan Submittals:

1. Refer to Section 406121.20 “Process Control System Testing” for specific testing submittal requirements.

1.5 INFORMATIONAL SUBMITTALS

A. Product Test Reports: Refer to individual instrument, component, or hardware specifications for specific requirements.

B. Evaluation Reports: Refer to individual instrument, component, or hardware specifications for specific requirements.

1.6 CLOSEOUT SUBMITTALS

A. Operation and Maintenance Data: For all PCSS supplied hardware to include in operation and maintenance manuals.
   1. Include the following information on the operations and maintenance manuals:

Table of Contents:

Provide a Table of Contents for the entire manual with the specific contents of each volume clearly listed. Include the complete Table of Contents in each volume.

Instrument and Equipment Lists:

Develop the following lists in Microsoft Excel format:

An instrument list or spreadsheet for all instruments supplied including tag number, description, specification section and paragraph number, manufacturer, model number, calibrated range, location, manufacturer phone number, local supplier name, local supplier phone number, completion year replacement cost, and any other pertinent data.

An equipment list or spreadsheet for all non-instrument devices supplied listing description, specification section and paragraph number, manufacturer, model number, location, manufacturer phone number, local supplier name, local supplier phone number, completion year replacement cost, and any other pertinent data.

Equipment Operations and Maintenance Information:

Provide ISA-TR20.00.01-2001 data sheets for all field instruments. For non-field instrumentation devices, provide a cover page for each device, piece of equipment, and OEM software that lists date, specification number, product name, manufacturer, model number, Location(s), and power required. Preferred format for the cover page is ISA-TR20.00.01-2001, general data sheet; however, other formats will be acceptable provided they contain all required information.

Provide either new documentation written specifically for this project or modified standard vendor documentation to the vendor O&M documentation for each device, piece of equipment, or OEM software. Indicate with arrows or circles all portions that apply to all standard vendor documentation furnished. Neatly line out or cross out all portions that do not apply. Remove groups of pages or sections that do not apply to the specific model supplied.

Provide the record documentation of the system audit and completed test forms with sign-offs as specified in Section 406121.20 “Process Control System Testing.”

Include instrument/equipment calibration and configuration forms.

As-Built Drawings:

Complete as-built drawings, including all drawings and diagrams specified in this section under the "Submittals" section. Include on the drawings all termination points on all equipment the system is

connected to, including terminal points of equipment not supplied by the PCSS. Provide electronic files for all drawings produced. Provide drawings in AutoCAD ".dwg" format and in Adobe Acrobat format.

Include on as-built documentation information from submittals, as described in this Specification, updated to reflect the as-built system. Incorporate errors in or modifications to the system resulting from the Factory and/or Functional Acceptance Tests.

B. Operations and Maintenance Data - Software Maintenance Manual:

1. Include these manuals as part of "Final System Documentation."
2. Software Listings and Databases: Submit hard copies of the same information required in the "Controller Program Submittal" except include files updated to reflect the as-built system. Include PDF versions of these files on a USB flash drive specified below.
3. PID Loop Tuning Parameters: Submit annotated chart recorder traces or computer system trend screen printouts showing tuned control loop response to plus and minus 40 percent of full span step changes of loop setpoint for each individual loop. For cascade loops, submit charts showing response of the secondary loop with secondary setpoint on manual and also response of the entire cascade control loop in automatic mode. Include a description of tuning methodology used.
4. Supply hardcopies of configuration information for the HMI systems, reporting systems, Historian Systems, and any other programs developed under this Contract.
5. Machine Readable Documentation: Provide two sets of as-built software documentation on CD or USB thumb drives in original electronic format for all PLC, HMI systems, reporting systems, Historian Systems, and any other programs developed under this Contract. Incorporate all changes made during or after testing, start-up, and commissioning.
6. Include final version of the system standards and conventions manual reflecting as-programmed conditions.

7. System Configuration Section:

Include a printout (or screen capture) of all configuration screens for every device requiring PCSS configuration. This includes, but is not limited to, the hardware firewall, PLC processors, Ethernet/IP, HMI software and any other communication modules.

C. Operations and Maintenance Data - Operators' Manual:

1. Provide Operator's Manuals prior to final acceptance of the system.
2. Separately bind and include in the manual all information necessary for the operator to monitor and control the plant from the control system. Write the manuals in non-technical terms and organize for quick access to each detailed description of the operator's procedure. Include the following information:

A comprehensive table of contents of the manual.

A simple overview of the entire system indicating the function and purpose of major control system components described by area or building.

A detailed description of the operation of the HMI and OIT including all appropriate displays. Including a screenshot of each HMI and OIT display screen and annotating each function in text is an acceptable format for presenting this information.

Step-by-step procedures for starting up or shutting down critical component of the control system such as server or a control panel.

Login / logout procedures for the operator interface system(s). list authorizations for different access levels, for example Engineer, supervisor, operator, Default and etc.

Complete, step-by-step procedures for printing reports and entering manual data.

Complete, step-by-step procedures for performing system or selected file backup and restoration including archiving historical data. Include recommended archiving schedule for historical data and/or frequency system performs an automatic back-up with a listing of all applications that are backed up or need to be backed up.

Operational description for operating HMI computer equipment and peripherals including printers, CD-ROMs, removable bulk storage devices, UPS, etc. Include in the description procedures for typical maintenance and troubleshooting tasks. The usage of any external storage data transfer devices, e.g., USB drive, shall be under the up-to-date control of virus and threat protections.

A complete glossary of terms and definition of acronyms.

List of personnel to be contacted for warranty and emergency services, including name, address, telephone number, pager or cell phone number, fax number, and email address.

D. Software and Firmware Operational Documentation:

1. Original Licensed Software:

Submit original software licenses and keys for all software provided under this Contract. Submit original paper based and electronic documentation for all software provided. Submit license agreement information including serial numbers, license agreements, User Registration Numbers, and related information. Provide licenses for all software under this Contract to Owner at the time of purchase. Provide media in software sleeves within O&M manual.

E. Electronic O&M Information:

1. In addition to the hard copy of O&M data, provide an electronic version of all equipment manuals and data sheets, along with any software back-up of configuration files, on USB flash drive or USB thumb drive. Supply electronic documents in Adobe Acrobat format.
2. Provide electronic files for all custom-developed manuals including training manuals. Supply text in Microsoft Office and Adobe Acrobat formats.
3. Provide electronic files for all drawings produced. Supply drawings in AutoCAD ".dwg" and in Adobe Acrobat formats. Provide drawings using the AutoCAD eTransmit feature to bind external references, pen/line styles, fonts, and the drawing file into individual zip files.
4. Back up each computer system hardware device onto DVD or USB thumb drive after Substantial Completion and turn over to Owner.

5. If specified in the training section, provide digital copies of all training videos. Format videos so they are readable by standard DVD players and by standard PC DVD drives, a minimum of 800 by 600 pixels, and include sound.

F. Include information as specified in Section 017823" Operation and Maintenance Data" on the cover and edge of each volume.

1.7 MAINTENANCE MATERIAL SUBMITTAL

A. Furnish extra materials from the same product run**,** that match products installed and that are packaged with protective covering for storage and identified with labels describing contents.

1. Refer to individual instrument and component specified in specification section 407000 "Instrumentation for Process Systems" for instruments spare requirements.
2. Submit unit and total costs for the additional spare items specified or recommended for each subsystem.
3. Pack all spare parts in individual cartons and labeled with indelible markings clearly indicating component(s) inside. Complete ordering information paperwork including manufacturer's contact information (address and phone number), part name, part number, equipment name and tag number(s) for which the part is to be used (if applicable) shall be supplied with the required spare parts. Deliver and store spare parts in a location directed by Owner or Engineer.

1.8 QUALITY ASSURANCE

A. Manufacturer Qualifications: PCSS to hold a valid UL-508 certification for their panel fabrication facility.

B. Responsible for the technical supervision of the installation by providing on-site supervision to the installers of the various components.

C. Process Control System Supplier (PCSS) to be a "systems integrator" regularly engaged in the design and the installation of instrumentation systems and their associated subsystems as they are applied to the municipal water and wastewater industry. For the purposes of this Specification Section, a "systems integrator" means an organization that complies with all of the following criteria:

1. Employs personnel on this project who have successfully completed ISA or manufacturer's training courses on general process instrumentation and configuration and implementation of the specific programmable controllers, computers, and software proposed for this project. Key personnel to hold ISA CCST Level 1 certification or have a minimum of 10 years of verifiable plant startup experience. Key personnel includes, as a minimum, the lead field technician.
2. Has successfully completed work of similar or greater complexity on at least three previous projects within the last five years. Successful completion is defined as a finished project completed on time, without any outstanding claims or litigation involving the PCSS. Potential references for projects where the PCSS's contract was of similar size to this project.

3. Has been actively engaged in the type of work specified in this Section for a minimum of five years.

D. Maintain a permanent, fully staffed, and equipped service facility within 200 miles of the project site with full-time employees capable of designing, fabricating, installing, calibrating, and testing the systems specified herein. Respond to on-site problems within 12 hours of notice. Provide an on-site response within four hours of notification starting at two months before scheduled startup to two months after startup completion.

E. Listed suppliers will not be required to submit a qualifications proposal (see “Informational Submittals”). Contractors interested in listing an equal to the below listed suppliers to submit PCSS' qualifications for review and approval as specified herein.

F. Select a PCSS from one of the following:

1. CPUSA:
   a) 16310 Bratton Ln, Austin, TX 78728.
   b) Phone: 512-852-8280.

2. Prime Controls:
   a) 16821 Joe Barbee Dr, Pflugerville, TX 78660.
   b) Phone: 512-375-3580.

G. Being listed in this specification does not relieve any potential PCSS from meeting the qualifications specified in this Section.

1.9 DELIVERY, STORAGE, AND HANDLING

A. Refer to Section 016000 "Product Requirements" for delivery, storage, and handling requirements.

1.10 FIELD CONDITIONS

A. Environmental Requirements: Refer to Electrical Drawings for specific environmental and hazardous area classifications.

B. Elevation: Design equipment to operate at the project ground elevation.

C. Temperature:

1. Outdoor area equipment to operate between -4 to 122 degrees F (-20 to 50 degrees C) ambient.
2. Equipment in indoor locations operate between 50 to 95 degrees F (10 to 35 degrees C) degrees ambient minimum.
3. Storage temperatures range from 32 to 122 degrees F (0 to 50 degrees C) degrees ambient minimum.
4. Furnish additional cooling or heating if required by the equipment specified herein.

5. Relative Humidity. Air-conditioned area equipment operate between 20 to 95 percent relative, non-condensing humidity. All other equipment operates between 5 to 100 percent relative, condensing humidity.

D. Do not ship control system equipment located in the control room until the control room areas comply with specified ambient temperature and humidity and free of dust and debris.

1.11 WARRANTY

A. Warranty Period: One year from date of Substantial Completion unless noted otherwise in individual specification Sections.

PART 2 - PRODUCTS

2.1 GENERAL

A. Electrical Requirements for Control System:

1. Operate equipment on a 60 Hertz alternating current power source at a nominal 120 volts, plus or minus 10 percent, except where specifically noted. Regulators and power supplies required for compliance with the above to be provided between power supply and interconnected instrument loop. Supply constant voltage transformers where equipment requires voltage regulation.
2. With the exception for field device network connected devices, all electronic instrumentation utilize linear transmission signals of isolated 4 to 20 mA DC (milliampere direct current) capable of driving a load up to 750 ohms, unless specified otherwise. However, signals between instruments within the same panel or cabinet may be 1 - 5 VDC (volts direct current).
3. Outputs of equipment that are not of the standard signals as outlined, have the output immediately raised and/or converted to compatible standard signals for remote transmission. No zero-based signals will be allowed.
4. All switches have double-pole, double-throw (DPDT) contacts rated at a minimum of 600 VA, unless noted otherwise.

5. Switches and/or signals indicating an alarm, failure or upset condition wired in a fail-safe manner as shown on the P&IDs, and as indicated on the instrument list. A fail-safe condition is a design feature or practice that, in the event of specific type of failure, inherently responds in a way that will cause minimal or no harm to other equipment, to the environment or to people. For instance, wet well low-level switch is wired as normally open as fail safe. When the water level is lower than the switch locates (alarm state), the contact opens and disrupts the power to extraction pump, which prevents it from running dry.
6. Materials and equipment UL approved whenever such approved equipment and materials are available.
7. All equipment furnished designed and constructed so that in the event of power interruption, the systems specified all go through an orderly shutdown with no loss of memory and resume normal operation without manual resetting when power is restored, unless otherwise noted.

8. Surge protection requirements for control system power, signal, and communication lines are specified in Section 406717 “Industrial Enclosures.”

PART 3 - EXECUTION

3.1 EXAMINATION

A. Examine substrates areas and conditions for compliance with requirements for maximum moisture content, installation tolerances and other conditions affecting performance of the Work.

B. Examine instruments and controllers before installation. Reject any products that are wet, moisture damaged, or mold damaged.

C. Examine walls, floors, roofs, and process area for suitable conditions where control panels, instrumentation, and controllers will be installed.

D. Prepare written report, endorsed by Installer, listing conditions detrimental to performance.

E. Proceed with installation only after unsatisfactory conditions have been corrected.

3.2 GENERAL INSTALLATION

A. The shield on each process instrumentation cable to be continuous from source to destination and be grounded at only one ground point at the control panel for each shield.

B. Provide sunshades for equipment mounted outdoors in direct sunlight. Include sunshades standoffs to allow air circulation around the cabinet. Orient equipment outdoors to face to the North to minimize the impact of glare and ultraviolet exposure on digital readouts.

3.3 IDENTIFICATION

A. Provide identification system for all PCSS provided hardware, instrumentation, and communication cabling. Provide details as specified in “Project Plan”.

3.4 FIELD QUALITY CONTROL

A. Refer to individual hardware and instrument specification Sections.

3.5 STARTUP SERVICE

A. Refer to Section 406121.20 “Process Control System Testing.”

B. Refer to Section 406126 “Process Control System Training.”

C. Engage a factory-authorized service representative to perform startup service as specified in individual hardware and instrument specification sections.

D. Weekly on-site coordination meetings with Engineer, Contractor, Vendors, and AESS as required during active construction period.

END OF SECTION 406100

© 2023 CDM Smith
All Rights Reserved

SECTION 406121.20 - PROCESS CONTROL SYSTEM TESTING

PART 1 - GENERAL

1.1 RELATED DOCUMENTS

A. Drawings and general provisions of the Contract, including General and Supplementary Conditions and Division 01 Specification Sections, apply to this Section.

1.2 SUMMARY

A. Section includes process control system testing, where the Applications Engineering services are performed by the Contractor.

B. Related Requirements:

1. Section 406100 “Process Control and Enterprise Management Systems General Provisions.”
2. Section 406343 “Programmable Logic Controllers.”
3. Section 406763 “Control Panel Mounted UPS.”
4. Section 406866 “Configuration of Controller Software.”
5. Section 406863 “Configuration of HMI Software”.
6. Section 406613“Switches and Routers.”
7. Section 407000 “Instrumentation for Process Systems.”
8. Section 019113 “General Commissioning Requirements.”

C. Furnish all labor, materials, equipment and incidentals required to complete the testing of all devices and systems furnished and installed as detailed on Drawings, and as specified herein.

D. Under this contract, the PCSS will also serve as the Applications Engineer System Supplier (AESS) and is responsible for the work defined by Section 406863 “Configuration of HMI Software” and Section 406866 “Configuration of Controller Software”.

1.3 DEFINITIONS

A. Process Control System Supplier (PCSS): The entity responsible for providing all materials, equipment, labor, and services required to achieve a fully integrated and operational control system.

B. Applications Engineering System Supplier (AESS): The entity who provides all programming, configuration, and related services for the control system equipment provided by the PCSS.

C. Human Machine Interface (HMI): A software-based user interface with supervisory level control and of machine level equipment.

D. Operator Interface Terminal (OIT): A hardware component of the HMI used for device level control and monitoring.

E. Programmable Logic Controller (PLC): A ruggedized programmable computer used for industrial automation.

F. Input/Output (I/O): Analog or digital field instrument signals to be received and interpreted by a PLC.

G. Uninterruptible Power Supply (UPS): A device capable of providing emergency battery power when the main power source fails.

1.4 PREINSTALLATION MEETINGS

A. Preinstallation Conference: Refer to Section 406100 "Process Control and Enterprise Management Systems General Provisions."

1.5 ACTION SUBMITTALS

A. Refer to Section 406100 "Process Control and Enterprise Management Systems General Provisions."

B. Testing Submittals - Submit, in one submittal, the following testing related documents:

1. Status signoff forms:

a. Develop and submit project specific I/O Status and Automatic Control Strategy signoff forms to be used during factory and field testing to organize and track each loop's inspection, adjustment, calibration, configuration, and testing status and sign off. Include sign-off forms for each testing phase showing all loops.

1) Example forms are shown in the Appendices.
2) Separate forms for factory and field testing can be used, or they can be combined, at the discretion of the PCSS.
3) Submit testing forms prior to start of testing.

1. Testing Procedures:

a. Submit detailed procedures proposed to be followed for each of the tests specified herein. The test procedures serve as the basis for the execution of the required tests to demonstrate that the system meets and functions as specified. At a minimum, provide the following test procedures:

1) Network and Communications Testing.
2) I/O Testing.
3) UPS.
4) Control panel power, indictors, and hardwired logic tests.

b. Structure documents in an orderly and easy to follow manner to facilitate an efficient and comprehensive test.
c. Indicate in test procedures all pre-testing setup requirements, all required test equipment, and simulation techniques to be used.

d. Structure test procedures in a cause and effect manner where the inputs are indicated, and the outputs are recorded.
e. Include in test procedures the demonstration and validation under normal operating conditions and under various failure scenarios as specified in Contract Documents.
f. Do not start testing until all Testing Submittals have been approved.

C. Test Documentation:

1. Upon completion of each required test, document the test by submitting a copy of the signed off Testing Status forms. Testing is not be considered complete until the signed-off forms have been submitted and approved. Submittals of other test documentation, including "highlighted" wiring diagrams with field technician notes, are not acceptable substitutes for the formal test documentation.

1.6 INFORMATIONAL SUBMITTALS

A. Evaluation Reports: For Test Documentation of system:

1. Upon completion of each required test, document the test by submitting a copy of the signed-off Testing Status forms. Testing is not considered complete until the signed-off forms are submitted and approved. Submittal of other test documentation, including "highlighted" wiring diagrams with field technician notes, are not acceptable substitutes for the formal test documentation.

1.7 CLOSEOUT SUBMITTALS

A. Refer to Section 406100 “Process Control and Enterprise Management System General Provisions.”

PART 2 - PRODUCTS (NOT USED)

PART 3 - EXECUTION

3.1 TESTING - GENERAL

A. Refer to Section 406100 “Process Control and Enterprise Management System General Provisions.”

B. Track results of all testing on a project specific status sign-off form or similar document. The PCSS is responsible for maintaining the sheet. Appendix of this Section has an example template for this sheet.

C. Tests the PCSS is required to perform are as follows:

1. Factory Testing:

a. Unwitnessed Factory Test (UFT).

b. Witnessed Factory Test (WFT).

2. Field Testing:

a. Operational Readiness Test (ORT).
b. Functional Demonstration Test (FDT).
c. Site Acceptance Test (SAT).

D. Wherever possible, perform tests using actual process variables, equipment, and data. Where it is not practical to test with real process variables, equipment, and data, provide all special testing materials and equipment required for a suitable means of simulation.

E. PCSS to coordinate all required testing with Contractor, affected Subcontractors, Engineer, and Owner.

F. Do not ship equipment to jobsite until Engineer or Owner has received all Factory Testing results and approved the system as ready for shipment.

G. Engineer reserves the right to test or re-test any functions.

H. Correction of Deficiencies:

1. Correct deficiencies in workmanship and/or items not meeting specified testing requirements to meet specification requirements at no additional cost to Owner.
2. Repeat testing, as specified herein, after correction of deficiencies is made until specified requirements are met. Perform work at no additional cost to Owner.

3.2 FACTORY TESTING - UNWITNESSED FACTORY TEST (UFT)

A. Purpose of UFT is for PCSS to check system prior to Engineer and/or Owner attending factory testing. This type of testing is part of any quality firm's internal QA/QC procedures.

B. Temporary network connections are required to confirm the network configuration. Temporary wiring of primary elements, final control elements, and field-mounted transmitters is not required.

C. Hardware to be tested includes all control system devices shown on System Architecture drawings and provided by PCSS.

D. Perform these tests, but not be limited to the following. Address each of these tests in the Test Procedure submittal.

1. All panels and enclosures provided to undergo a thorough inspection to verify integrity of cabinet enclosures, frame structures, paint work and finish, etc. Review panel drawings to ensure they accurately reflect panel layout and wiring.
2. Perform a system audit to verify all components have been staged for test and have been documented properly with correct model numbers, serial numbers, etc. Prove documentation of audit at factory test and submit as part of O&M Manual Documentation:

a. For each workstation and server, list of all software installed (including the operating system), with software revision number, software improvement modules or patches installed, license number and owner registration information, warranty period, vendor and local distributor names and contacts.
b. For each microprocessor-based component connected to control communication backbone in system (PLCs, managed switches, protocol converters, communication cards on final field devices, radios, etc.), list firmware revision, vendor and local distributor information, and system, warranty information, configuration parameters (e.g., communication settings, fail position settings, etc.)

3. Perform panel wire pull tests to ensure all wiring has been connected with appropriate torque to prevent wires from coming loose.

4. Test UPS to verify UPS switch power correctly while keeping all UPS powered loads online. Perform testing of UPS to determine if they have been sized correctly to maintain specified run time during field testing.
5. Perform a 100 percent I/O point checkout to verify proper operation of input/output points from panel terminations to HMI and OIT nodes. At a minimum, I/O checkout consists of four steps.

   a. Jumper discrete input signals at field terminal blocks in control panels to verify proper status in HMI and OIT nodes.
   b. Connect analog input signals to a signal generator at field terminal blocks in control panels to verify proper status in HMI and OIT nodes and verify signals are at zero percent, 50 percent, and 100 percent of full scale.
   c. Test discrete output signals by switching equipment to manual control at HMI and OIT nodes and turning the output on or other means to turn the output on. Then verify the output is on by connecting a digital multimeter to measure continuity at terminations, thus verifying command from PLC has properly executed contact closure.
   d. Test analog output signals by switching the equipment to manual control at HMI and OIT nodes and turning output to designated setpoints, e.g., 0%, 50%, 100%. Then verify output by utilizing a digital multimeter to measure current or voltage generated at termination points.

6. Verify all control strategies using simulation or other means to verify logic performs as expected. Verify faults and logical failure conditions for control strategies such instrument failures, equipment failures, loss of communication between HMI Server and PLC, loss of peer-to-peer communication, out of range testing (over and under scale) for analog inputs, and all other strategies specified in control strategy document.
7. For each hardware enclosure, include with inspection, but not be limited to, cabinet enclosures, frame structure, paint work and finish, dimensions, and hardware operability (i.e., fans, door hinges, keylocks, etc.).
8. For each subpanel, include with inspection, but not be limited to, I/O subsystem physical layout, power supply sizing and mounting, cable routing, wire runs across hinges properly installed, fans and blowers unobstructed and mounted to maximize air flow, power conditioning correctly installed, and overall layout and installation of components meets manufacturer's recommendations and standard industry accepted practices.
9. All other control panel circuitry.
10. Perform the following systems tests:

a. Demonstrate ability to share data between operator workstations and servers.
b. Demonstrate ability of each workstation to print reports on all designated report printers.
c. Demonstrate ability for each workstation to read and write designated files from servers and other workstations on the network.
d. Demonstrate operability of all back-up and mass storage equipment.
e. Demonstrate communication failure and recovering self-healing ring testing.

f. Demonstrate total power failure and recovery. Remove the UPS for this test.
g. Demonstrate capabilities of the historical server.
h. Demonstrate failover capabilities of the redundant HMI servers.
i. Demonstrate failover capabilities of the redundant PLCs.

E. Upon successful completion of UFT, PCSS to submit a record copy of test results as specified in PART 1. As part of this test results submittal, notify Engineer and Owner in writing that system is ready for WFT. No other notice of Factory test will be accepted. Engineer and/or Owner to schedule a test date within 30 days of receipt of this submittal.

3.3 FACTORY TESTING - WITNESSED FACTORY TEST (WFT)

A. Purpose of WFT is to allow Engineer or Owner representatives to witness functionality, performance, and stability of entire hardware and software system as a complete integrated system. WFT to be run by PCSS and conducted at PCSS's facility.

B. Required Documents for Test:

1. Clean set of approved panel drawings and wiring diagrams.
2. Set of Contract Documents - all drawings and specifications.
3. All design-change related documentation.
4. Master copy of the PCSS developed factory testing signoff forms.
5. Testing procedures.

C. Operate the system continuously throughout WFT without failure, except where initiated per established test procedures. Unanticipated failures may, at Owner or Engineer's option, result in overall WFT being deemed unsuccessful. Correct and re-test all deficiencies identified during these tests prior to completing WFT or shipment of panels to jobsite as determined by Owner/Engineer.

D. Perform these tests during the WFT, but not be limited to, the following:

1. A repeat of all tests specified in the UFT.

E. Daily schedule during these tests to be as follows:

1. Morning meeting to review the day's test schedule.
2. Scheduled tests and sign-offs.
3. End of day meeting to review day's test results and to review or revise next day's test schedule.
4. Unstructured testing period by witnesses.

F. Upon successful completion of WFT, PCSS to submit a record copy of test results as specified in PART 1.

3.4 FIELD TESTING - OPERATIONAL READINESS TEST (ORT)

A. Purpose of ORT is to check that process equipment, instrument installation, instrument calibration, instrument configuration, field wiring, control panels, and all other related system components are ready to monitor and control the processes. This test determines if equipment is ready for operation.

B. This test to take place prior to FDT and startup. Prior to starting this test, install relevant process equipment and mechanically test instruments installed, control panels installed, and field wiring complete.

C. Required Documents for Test:

1. Master copy of the PCSS developed field testing sign-off forms.
2. Testing procedures.
3. Calibration forms.

D. These inspections, calibrations, and tests do not require witnessing. However, Engineer may review and spot-check testing process periodically. All deficiencies found to be corrected by PCSS prior to commencement of Functional Demonstration Test.

E. PCSS to maintain Sign-off forms and Calibration forms at job site and make them available to Engineer/Owner at any time.

F. Perform the following tests as part of ORT:

1. Instrument calibration, configuration, and set-up.
2. Input/Output (I/O) Testing to HMI and OITs.
3. Testing of control strategies.

G. Instrument calibration, configuration, and set-up:

1. Calibrate, configure, and set-up all components and instruments to perform specified functions.
2. Calibration form:

   a. For any component or instrument requiring dip switch settings, calibration, or custom configuration, maintain a calibration form in field documenting this information. These forms provide a summary of the actual settings used in the field to allow an Instrument technician to replace the device entirely and configure it to function as it did before.
   b. Add this information to Instrument data sheet and to a copy of manufacturer's standard "Configuration Sheet" or create a separate form.

      1) If a separate form, list Project Name, Loop Number, ISA Tag Number, I/O Module Address, Manufacturer, Model Number/Serial Number, Output Range and Calibrated Value.

c. Some examples of required information are:

1) For Discrete Devices: Actual trip points and reset points.
2) For Instruments: Any configuration or calibration settings entered into instrument.
3) For Controllers: Mode settings (PID).
4) For I/O Modules: Dip switch settings, module configuration (if not documented in native programming documentation).

d. Maintain a copy of these forms in field during testing and make them available for inspection at any time.
e. For any device that allows a software back-up of configuration files to a laptop, make configuration files available to Engineer/Owner for inspection. Submit as part of Final System Documentation as specified in Section 406100 "Process Control and Enterprise Management Systems General Provisions."

H. I/O Testing:

1. Purpose of I/O testing is to check that process equipment, instrument installation, calibration, configuration, field wiring, and control panels are set-up correctly to monitor and control the processes. This test is commonly referred to as a "loop test" or an I/O checkout.
2. PCSS in conjunction with Contractor to test signals under process conditions. Preferred test method will always be to execute test wherever possible to end elements. For example, preferred test will prove valve open/close limit switches by operating valve, not by installing a jumper on limit switch contacts. However, if equipment or process is not available to test a signal over its entire calibrated range, PCSS may test using a simulation method and make a note on sign-off form.
3. Perform the following I/O tests:

a. Discrete Input: At device or instrument, change signal condition from inactive to active state. Observe results on all indicators within loop such as HMI screens, OIT screens, pilot lights, horns, beacons, etc.

b. Analog Input: Test analog signal over entire engineering range at various intervals including 0, 50%, and 100% as well as on increasing and decreasing range. Observe results on all indicators within loop such as HMI screens, OIT screens, recorders, digital indicators, etc.
c. Test discrete output signals by switching equipment to manual control at the HMI and OIT nodes and turning output on or using other means to turn output on. Then verify equipment responds accordingly.
d. Test analog output signals by switching equipment to manual control at HMI and OIT nodes and turning output on to designated setpoints, e.g., 0%, 50%, 100%.. Then verify equipment responds accordingly.

I. Testing of Automatic Control Strategies:

1. Verify all automatic control strategies using actual process equipment and instruments, or other means, to verify logic performs as expected. Verify faults and logical failure scenarios for control strategies such as instrument failures, equipment failures, loss of communication between HMI Server and PLC, loss of peer-to-peer communication, out

of range testing for analog inputs, loss of power, and all other strategies specified in control strategy document.

J. Repeat all systems tests specified under factory testing.

K. Test UPS to verify UPS switch power correctly while keeping all UPS powered loads online. Also, test sizing of UPS by switching off-line power to UPS and verify if they maintain specified run time.

L. For all panels with enclosures modified by this Contract, test internal control panel temperature under full running conditions to ensure proper cooling/ventilation is being provided.

M. Upon successful completion of ORT, PCSS to submit a record copy of test results as specified in PART 1 and request scheduling of FDT.

3.5 FIELD TESTING - FUNCTIONAL DEMONSTRATION TEST (FDT)

A. After facility is started-up and running treatment process in automatic control to extent possible, perform a Functional Demonstration Test. Purpose of FDT is to allow Engineer or Owner representatives to witness actual functionality, performance, and stability of system while connected to process equipment.

B. Required Documents for Test:

1. Set of panel drawings and wiring diagrams from ORT with corrections noted.
2. Set of Contract Documents - all drawings and specifications.
3. All design-change related documentation.
4. Signed-off master copy of the PCSS developed field testing signoff forms.
5. Testing procedures.
6. Copy of completed calibration forms.
7. One copy of all O & M Manuals for PCSS supplied equipment.

C. Perform a witnessed FDT on each process area. To extent possible, repeat testing performed during ORT.

D. Follow specified daily schedule during factory tests and FDT.

E. After coordinating with Operations, perform a "Black Start" of the plant to confirm plant operation recovers as specified in Contract Documents. Black start means shutting off power to the plant and turning it back on. Perform separate tests by recovering the plant while on generator (if a generator is specified) and while on utility power.

F. Document punch list items and resolutions noted during test on Punch list/Resolution form. In event of rejection of any part or function test procedure, PCSS to perform repairs, replacement, and/or retest within 10 days.

G. Upon successful completion of the FDT, PCSS to submit a record copy of test results as specified in PART 1.

3.6 FIELD TESTING - SITE ACCEPTANCE TEST (SAT)

A. After completion of FDT, and system is started-up and running treatment process in automatic control to extent possible, system shall undergo a System Acceptance Test (SAT) with a duration of 30 days.

B. While this test is proceeding, Engineer and Owner have full use of system. Only allow plant operating personnel to operate equipment associated with live plant processes. Plant operations remain the responsibility of Owner and decision of plant operators regarding plant operations are final.

C. During this test, PCSS personnel to be present as required to address any potential issues that would impact system operation. PCSS is expected to provide personnel for this test who have an intimate knowledge of hardware and software of system. When PCSS personnel are not on-site, PCSS to provide cell phone/pager numbers that Owner personnel can use to ensure that support staff is available by phone and/or on-site within four hours of a request by operations staff.

D. PCSS to analyze and correct any malfunctions during test. In event of rejection of any part or function, PCSS to perform repairs or replacement within 5 days.

E. Throughout duration of SAT, do not make software or hardware modifications to the system without prior approval from Owner or Engineer.

END OF SECTION 406121.20

APPENDIX **40 61 21-**A: EXAMPLE INPUT/OUTPUT (I/O) STATUS SIGN OFF FORM

An example template for I/O Status signoff form to be used for documenting testing results to Owner is attached. PCSS is required, prior to testing, to create a project specific I/O Status signoff form based on attached template or approved equal. PCSS may obtain an electronic copy of template from Engineer or develop it on their own.

APPENDIX **40 61 21**-B: EXAMPLE AUTOMATIC CONTROL STRATEGIES SIGN OFF FORM

An example template for Automatic Control Strategies signoff form to be used for documenting testing results to Owner is attached. PCSS is required, prior to testing, to create a project specific Automatic Control Strategies signoff form based on attached template or approved equal. PCSS may obtain an electronic copy of template from Engineer or develop it on their own.

4-Jun-14

[Project Name] Appendix A - Input/Output (I/O) Status Sign-Off Form

All Sections below are required to be filled out by PCSS as part of Field Testing.
Instrument Alarm Setpoint - Setpoint for any alarms set by PCSS
Wiring Complete - Signal wired from field device to PLC
I/O Tested - Signal tested from field device to SCADA HMI

PLC	Signal Tag	Description	Range or Active State when closed	P&ID	Signal	Rack	Slot	Channel	Instrument Alarm Setpoint	Calibrate, config., and Wiring complete	Date	PCSS I/O testing	Date	I/O Testing to the HMI	Date	Notes
PLC-SC	LIT-4000-1	Secondary Clarifier No. 1 Sludge Level	0-10 ft	8	AI	2	1	0								
PLC-SC	LIT-4010-3	Secondary Clarifier No. 3 Sludge Level	0-10 ft	8	AI	2	1	1								
PLC-SC	SI-4100-1	RAS Pump No. 1 Speed Feedback	0-100%	14	AI	2	1	2								
PLC-SC	SI-4100-4	RAS Pump No. 4 Speed Feedback	0-100%	15	AI	2	1	3								
PLC-SC	FIT-4102-1	RAS Flow Pumps 1-3	0-1900 GPM	14	AI	2	1	4								
PLC-SC	SI-4110-1	WAS Pump No. 1 Speed Feedback	0-100%	14	AI	2	1	5								
PLC-SC	N/A	Spare Slot	N/A	N/A	Spare	2	5	N/A								
PLC-SC	SC-4100-1	RAS Pump No. 1 Speed Setpoint	0-100%	14	AO	2	7	0								
PLC-SC	SC-4100-2	RAS Pump No. 2 Speed Setpoint	0-100%	14	AO	2	7	1								
PLC-SC	SC-4100-3	RAS Pump No. 3 Speed Setpoint	0-100%	14	AO	2	7	2								
PLC-SC	SC-4110-1	WAS Pump No. 1 Speed Setpoint	0-100%	14	AO	2	7	3								
PLC-SC	Spare	Spare	N/A	N/A	AO	2	7	4								
PLC-SC	Spare	Spare	N/A	N/A	AO	2	7	5								
PLC-SC	TSH-4000-1	Secondary Clarifier No. 1 High Temp	Normal	8	DI	3	1	0								
PLC-SC	XA-4000-1	Secondary Clarifier No. 1 Motor Overload	Normal	8	DI	3	1	1								
PLC-SC	WAH-4000-1	Secondary Clarifier No. 1 High Torque	Normal	8	DI	3	1	2								
PLC-SC	WAHH-4000-1	Secondary Clarifier No. 1 High High Torque	Normal	8	DI	3	1	3								
PLC-SC	YRI-4000-1	Secondary Clarifier No. 1 On/Off	On	8	DI	3	1	4								
PLC-SC	YCI-4000-1	Secondary Clarifier No. 1 In Remote	In Remote	8	DI	3	1	5								
PLC-SC	YFI-4100-1	RAS Pump No. 1 VFD Fault	Normal	14	DI	3	1	6								
PLC-SC	FAL-4100-1	RAS Pump No. 1 Low Flow	Normal	14	DI	3	1	7	50 GPM	RJM	12/18/2011	JAS	12/22/2011	MIC	12/29/2011	Example completed line
PLC-SC	Spare	Spare	Normal	14	DI	3	1	8								
PLC-SC	YRI-4100-1	RAS Pump No. 1 Running	Running	14	DI	3	1	9								
PLC-SC	YCI-4100-1	RAS Pump No. 1 In Remote	In Remote	14	DI	3	1	10								
PLC-SC	YFI-4110-1	WAS Pump No. 1 VFD Fault	Normal	14	DI	3	1	11								
PLC-SC	FAL-4110-1	WAS Pump No. 1 Low Flow	Normal	14	DI	3	1	12								
PLC-SC	Spare	Spare	Normal	14	DI	3	1	13								
PLC-SC	YRI-4110-1	WAS Pump No. 1 Running	Running	14	DI	3	1	14								
PLC-SC	YCI-4110-1	WAS Pump No. 1 In Remote	In Remote	14	DI	3	1	15								
PLC-SC	HSS-4000-2	Secondary Clarifier No. 2 Start Command	Start	8	DO	4	6	0								
PLC-SC	Spare	Spare	N/A	N/A	DO	4	6	1								
PLC-SC	HSS-4100-2	RAS Pump No. 2 Start Command	Start	14	DO	4	6	2								
PLC-SC	HSS-7000-2	Sludge Holding tank Tank Blower No. 2 Start Command	Start	17	DO	4	6	3								
PLC-SC	HSS-4100-5	RAS Pump No. 5 Start Command	Start	15	DO	4	6	4								
PLC-SC	Spare	Spare	N/A	N/A	DO	4	6	5								
PLC-SC	HSS-4105-1	Secondary Scum Pump No. 2 Start/Stop	Start	15	DO	4	6	6								
PLC-SC	HSS-4110-2	WAS Pump No. 2 Start/Stop Command	Start	15	DO	4	6	7								
PLC-SC	7160-FQI-1	Sludge Loadout LCP Pumping Indicator	Pumping	17	DO	4	6	8								
PLC-SC	Spare	Spare	N/A	N/A	DO	4	6	9								
PLC-SC	HSS-7115-2	Sludge Holding Tank Mixer No. 2 Start	Start	17	DO	4	6	10								
PLC-SC	Spare	Spare	N/A	N/A	DO	4	6	11								
PLC-SC	HSO-7117-2	Sludge Holding Tank Discharge Valve No. 2 Open CMD	Open	17	DO	4	6	12								
PLC-SC	HSC-7117-2	Sludge Holding Tank Discharge Valve No. 2 Close CMD	Close	17	DO	4	6	13								
PLC-SC	HSS-7120-2	TS Transfer Pump No. 2 Start Command	Start	17	DO	4	6	14								
PLC-SC	Spare	Spare	N/A	N/A	DO	4	6	15								

SAMPLE

4-Jun-14

[Project Name] Appendix B - Automatic Control Strategies Sign-Off Form

All Sections below are required to be filled out by PCSS as part of Testing

Auto. Control Strategies. - Loop operational in Automatic as defined in Control Stategies

Control Strategies Loop #	Control Strategy Description	P&ID	Auto. Control Strategy	Date	Notes
LOOP 281 - 284	LOW FLOW PUMPS	8			
LOOP 290	LOW EQ CHANNEL FLOW NO.4	8			
LOOP 300	MICROFILTRATION AIR SUPPLY LOW PRESSURE	10			
LOOP 351, 352	SITE LIFT STATION PUMP NO.1 AND NO. 2	12			
LOOP 355	SITE LIFT STATION HIGH AND LOW LEVEL CONTROL	12			
LOOP 371, 372	SLUDGE HOLDING TANK NO.1 AND NO. 2 LEVEL	14			
LOOP 381, 382	SLUDGE TRANSFER PUMPS	14			
LOOP 385	SLUDGE TRANSFER PUMPS REMOTE START/STOP COMMAND	14			
LOOP 700	EFFLUENT PUMPING STATION LEVEL	14			
LOOP 701, 702, 703	EFFLUENT PUMP NO.1	14			
LOOP 840	POST AERATION CHANNEL AIR FLOW CONTROL	15			
LOOP 900	SLUDGE TRANSFER PUMPS DISCHARGE FLOW	8			
LOOP 971	CENTRIFUGE SLUDGE FEED PUMP NO.1	8			
LOOP 1001	CENTRIFUGE NO.1 SLUDGE FEED FLOW CONTROL	8			
LOOP 1411, 1412	SODIUM HYPOCHLORITE STORAGE TANKS LEVEL	8			
LOOP 1421, 1422	SODIUM HYPOCHLORITE PUMPS	8			
LOOP 1430	SODIUM HYPOCHLORITE STORAGE TANKS CONTAINMENT AREA HIGH LEVEL DETECTION	14			
LOOP 2051, 2052, 2053	DIESEL ENGINE GENERATOR STATUS	14			
LOOP 2055	TRANSFER SWITCH STATUS	14			
LOOP 2060	GENERATOR KILOWATTS MONITORING	14			
APPENDIX ONE	EQUIPMENT RESTART DURING A POWER LOSS WITH THE GENERATOR RUNNING	14			
APPENDIX TWO	EQUIPMENT RESTART WITH POWER RESTORED AFTER A POWER LOSS	14			
N/A	SELF-HEALING CAPABILITIES OF NETWORK	N/A			
N/A	REDUNDANT SCADA SERVER FAILOVER AND RECOVERY	N/A			

SAMPLE

© 2023 CDM Smith
All Rights Reserved

This page intentionally left blank.

© 2023 CDM Smith
All Rights Reserved

SECTION 406126 - PROCESS CONTROL SYSTEM TRAINING

PART 1 - GENERAL

1.1 RELATED DOCUMENTS

A. Drawings and general provisions of the Contract, including General and Supplementary Conditions and Division 01 Specification Sections, apply to this Section.

1.2 SUMMARY

A. Section includes process control system training for all devices and systems furnished and installed as detailed on the Drawings.

B. Related Requirements:

1. Section 406100 “Process Control and Enterprise Management Systems General Provisions.”
2. Section 406343 “Programmable Logic Controllers”.
3. Section 406763 “Control Panel Mounted UPS”.
4. Section 406717 “Industrial Enclosures”.
5. Section 406866 “Configuration of Controller Software”.
6. Section 406863 “Configuration of HMI Software”.
7. Section 407000 “Instrumentation for Process Systems”.

1.3 PREINSTALLATION MEETINGS

A. Preinstallation Conference: Refer to Section 406100 “Process Control and Enterprise Management Systems General Provisions.”

1.4 ACTION SUBMITTALS

A. Preliminary Training Plan Submittal:

1. No less than 120 days prior to start of startup and prior to preparation of Final Training Plans, submit outlines of each training course including course objectives and target audience, resumes of instructors, prerequisite requirements for each class, and samples of handouts for review.

B. Final Training Plan Submittal:

1. Upon receipt of Engineer's comments on preliminary training plan, and no less than 45 days prior to startup submit specific proposed training plan with the following:

a. Definitions, objectives, and target audience of each course.

b. Schedule of training courses including proposed dates, duration, and locations of each class.
c. Complete copy of all proposed handouts and training materials bound and logically arranged with all materials reduced to a maximum size of 11 inch by 17 inch, then folded to 8.5 inch by 11 inch for inclusion into the binder.

2. Submit final training plan no less than 45 days prior to start of startup.

1.5 CLOSEOUT SUBMITTALS

A. Refer to Section 406100 “Process Control and Enterprise Management System General Provisions.”

PART 2 - PRODUCTS (NOT USED)

PART 3 - EXECUTION

3.1 GENERAL

A. Directly relate the training and instruction to the system being supplied. Training program represents a comprehensive program covering all aspects of the operation and maintenance of the system.

B. Coordinate all training schedules with and at the convenience of Owner, including shift training required to correspond to Owner's working schedule.

C. All onsite instructors must be intimately familiar with the operation and control of Owner's facilities.

D. Provide detailed training manuals to supplement the training courses including specific details of equipment supplied and operations specific to the project. Provide the manuals in hardcopy for each student. Provide electronic copy of each training manual in PDF format for Owner's future use.

E. Make use of teaching aids, manuals, or slide/video presentations as required. After training services, deliver training materials to Owner.

F. Owner reserves the right to videotape all custom training sessions. Training tapes become sole property of Owner.

G. Cost of Travel for off-site training:

1. Cost of Travel for off-site training is paid directly by entity employing the staff doing the training.

3.2 TRAINING SUMMARY

A. Provide following training courses listed in the summary table below:

Description	Minimum Course Duration (hours)	Maximum Number of Trainees per Course	Number of Times Course to be Given	Intended Audience
Onsite Training				Maintenance
Control System Overview Seminar	Covered in AESS scope of work			
Operator Control System Training	Covered in AESS scope of work			
System Reports and Historian	Covered in AESS scope of work			
Installed Control System	2	2	1	Maintenance, Administrator
PLC Hardware/Software	2	2	1	Maintenance
Instrument manufacturer training	4	2	1	Maintenance
Instruments	16	2	1	Maintenance
Instruments - Operator familiarity	2	8	1	Operations

B. Definitions of Audience Roles:

1. Administrator: Personnel responsible for maintaining the HMI / SCADA system.
2. Maintenance: Personnel responsible for maintaining the field controller hardware and instrumentation system.
3. Operations: Personnel responsible for daily plant operations.
4. Management: Non-daily operations personnel.

C. Provide at least 30 days' notice to Owner to schedule trainings so that they can schedule the appropriate staff.

3.3 ONSITE TRAINING

A. Training personnel are required to be intimately familiar with the control system equipment, its manipulation, and configuration. Training personnel are required to command knowledge of system debugging, program modification, troubleshooting, maintenance procedure, system operation, and programming, and capable of transferring this knowledge in an orderly fashion to technically oriented personnel.

B. Installed Control System Training:

1. Provide training for Owner's personnel in the functionality, maintenance, and troubleshooting, of the installed Control System. Conduct training before Functional Demonstrator Test (FDT), but not more than two months before.
2. Provide training and instruction specific to the system that is being supplied.
3. Provide training consisting of classroom instructions and hands-on instruction utilizing Owner's system.
4. Provide detailed training on the actual configuration and implementation for this Contract covering all aspects of the system that will allow Owner's personnel to maintain, modify, troubleshoot, and develop future additions/deletions to the system. Provide training covering the following subjects:

a. System overview.
b. System hardware components and specific equipment arrangements.
c. Periodic maintenance.
d. Troubleshooting and diagnosis.
e. Network configuration, communications, and operation.
f. TCP/IP addressing procedures for all Ethernet devices.

C. Programmable Logic Controller (PLC) Hardware and Software:

1. Provide training for Owner's personnel in operation, maintenance, troubleshooting, etc. with PLC hardware and software system. Conduct the training before FDT, but not more than two months before.
2. Provide training and instruction specific to the system that is being supplied.
3. Provide training consisting of classroom instructions and hands-on instruction utilizing Owner's system. Provide detailed training on the actual configuration and implementation for this Contract covering all aspects of PLC system that will allow Owner's personnel to maintain, modify, troubleshoot, and develop future additions/deletions to PLC system. Provide training covering the following subjects:

a. PLC system overview.
b. PLC system architecture.
c. PLC system hardware components and specific equipment arrangements.
d. PLC system startup, shut down, load, backup, and PLC failure recovery.
e. Periodic maintenance.
f. Troubleshooting and diagnosis down to the I/O card level.
g. PLC configuration, communications, and operation.

D. Instrument Manufacturer Training:

1. Provide manufacturer instrument training for those instruments where specifically indicated in the Instruments section. This is on-site training provided by an authorized representative of the manufacturer. Manufacturer's representative is required to be fully knowledgeable in equipment operation and maintenance.

E. Instrument Training:

1. Provide instruction on the maintenance of the field and panel instrumentation for Owner's instrumentation technicians. Conduct this training before FDT, but no more than one month before and at a time suitable to Owner. This training takes place at Owner's facility. Training program is required to include the following elements:

a. Training in standard hardware maintenance for the instruments provided.
b. Specific training for the actual instrumentation configuration to provide a detailed understanding of how the equipment and components are arranged, connected, and set up for this Contract.
c. Testing, adjustment, and calibration procedures.
d. Troubleshooting and diagnosis.
e. Maintenance and frequency.

F. Instruments - Operator familiarity:

1. Provide operator level instruction on the use of the field and panel instrumentation for Owner's operations staff. Conduct training before the 30-day site acceptance test, but no more than one month before and at a time suitable to Owner. This training takes place at Owner's facility. Include hands on demonstration of information each transmitter indicates, and method used to retrieve any operator information from transmitter, including use of pushbuttons and interpretation of international graphic symbols used on the instruments.

END OF SECTION 406126

© 2023 CDM Smith
All Rights Reserved

This page intentionally left blank.

© 2023 CDM Smith
All Rights Reserved

SECTION 406196 - PROCESS CONTROL DESCRIPTIONS

PART 1 - GENERAL

1.1 RELATED DOCUMENTS

A. Drawings and general provisions of the Contract, including General and Supplementary Conditions and Division 01 Specification Sections, apply to this Section.

1.2 SUMMARY

A. Applications Engineer System Supplier (AESS) Programming Scope

1. Develop the control system applications to implement the process control descriptions for all new and existing systems. This Section is provided to define control strategies to be used for PLC programming of the system.
2. The Contract Documents are a single integrated document, and as such, all Drawings, Specifications Divisions and Specifications Sections apply. It is the responsibility of the Contractor and Subcontractors to review all Sections to ensure a complete and coordinated project.
3. The PCSS is cautioned to read this Section and all related Sections and their entirety prior to starting any programming. Many general control strategies and requirements are defined once in the body of this Section with the specific requirement called out in the individual control strategy. Implement these general strategies throughout this Contract unless specifically directed otherwise in the individual loop process control descriptions.
4. Follow loop and device tagging criteria shown on the Drawings without exception.
5. Establish programming approach and database/variable identification standards prior to performing any programming work. Review the proposed standards and conventions with the Owner during the coordination workshop required by Section 406863 “Configuration of HMI Software.”

B. Related Requirements:

1. Section 406100 “Process Control and Enterprise Management Systems General Provisions.”
2. Section 406863 “Configuration of HMI Software.”
3. Section 406866 “Configuration of Controller Software.”

1.3 DEFINITIONS

A. Applications Engineering System Supplier (AESS): The entity who provides all programming, configuration, and related services for the control system equipment provided by the PCSS.

B. Human Machine Interface (HMI): A software-based user interface with supervisory level control of machine level equipment.

C. Input/Output (I/O): Analog or digital field instrument signals to be received and interpreted by a PLC.

D. Operator Interface Terminal (OIT): A hardware component of the SCADA system used for device level control and monitoring.

E. Operator Workstation (OWS): A hardware component of the SCADA system used for supervisory level control and monitoring.

F. Process Control System Supplier (PCSS): The entity responsible for providing all materials, equipment, labor, and services required to achieve a fully integrated and operational control system.

G. Programmable Logic Controller (PLC): A ruggedized programmable computer used for industrial automation.

H. Supervisor Control and Data Acquisition (SCADA): Hardware and software components used for high-level supervisory monitoring of industrial processes. Typical devices that are part of the SCADA network include computers (OWS), PLCs, Ethernet switches, OITs, and HMIs.

PART 2 - PRODUCTS (NOT USED)

PART 3 - EXECUTION

3.1 GENERAL

A. The control descriptions are broken into areas. The following is a list of areas and the loop numbers associated with each area.

1. Cedar Breaks Lift Station P&ID (I-4) 100-199
2. DB Wood Lift Station P&ID (I-5) 200-299

B. The control descriptions are sorted by loop number for each area. The loop index has three columns associated with it; Loop Number, Loop Description, and Page. Each loop is associated with a specific SCADA I/O cabinet location to which it shall communicate.

C. The control descriptions are broken into a hierarchical layer concept. There may be one layer or multiple layers per loop, depending upon that loop. An example of multiple layered loop is as follows. The lowest layer of control, local control, is at that piece of equipment or that piece of equipment's panel or drive. The second layer of control is at an intermediate control panel between the equipment and the SCADA I/O or vendor's PLC I/O. The third layer would be at the vendor's PLC or microprocessor touchscreen station. The highest layer of control is by the SCADA PLC System with its associated operator workstations (OWS) in the main control room, remote office locations, and satellite locations operator interface terminals (OITs). The SCADA PLC/ OWS refers to both the SCADA PLC, which does the actual monitoring and control logic for the process equipment and the SCADA operator workstation (OWS), which are computers that have graphical software that interface to the PLC software for monitoring and implementing all

operator-required tasks to control that process equipment. Any functions done in the operator workstations also take place at all the SCADA OITs.

3.2 CONTROL FUNCTION DEFINITIONS AND GENERAL CRITERIA

A. The control narratives in the following sections shall be used in conjunction with the project drawings. Functional descriptions are provided for both the HMI and PLC software required under this contract.

B. For all controlled devices such as pumps, valves, etc.; if the device is commanded to Start or Stop (or Open or Close) by the PLC, and the device feedback state does not match the commanded state within a preset time, an equipment Discrepancy Alarm shall be generated by the PLC for display and alarming at the HMI, and the device is commanded to Stop (valves shall remain in the last state unless otherwise noted in the control description). If a duty pump or system is commanded to start and does not start within the pre-set time, an alarm shall be generated by the PLC for display and alarming at the HMI. The operator shall then determine whether or not to start the standby pump or system, unless otherwise noted in the control description. Also, if a device feedback state does not match the commanded state at any time, excluding the change of state described above, an equipment Failure Alarm is generated by the PLC for display and alarming at the HMI and the device is commanded to Stop (valves shall remain in the last state unless otherwise noted in the control description). After a Discrepancy Alarm occurs, the device cannot be started again until the Operator at the HMI has issued a Reset. All controlled devices with feedback shall indicate Failure Alarms at the PLC for display and alarming at the associated process graphic displays, even if not shown on the Drawings.

C. All analog alarms generated at the PLC shall be generated as follows. If the analog point's value exceeds or drops below the alarm limit value, then an alarm shall be generated at the PLC for display and alarming at the HMI. To eliminate excessive alarm reporting, the analog point shall remain in alarm until the analog point's value returns beyond the limit set by the analog limit dead band.

D. For all analog points (such as level, flow, pressure, etc.); if the value of the analog point is below a value of 2 mA since the last time the analog point was scanned by the PLC, a Loss-of-Signal shall be generated at the PLC for display and alarming at the HMI. The alarms shall remain in effect until the value is within the normal signal range (4-20 mA) the next time the analog point is scanned by the PLC. During the Loss-of-Signal state, an alarm shall be shown on the associated process graphic displays even if not shown on the loop drawings.

E. For all analog points (such as level, flow, pressure, etc.); if the value of the analog point is above or below the transmitter range, an Out-Of-Range alarm shall be generated at the PLC and the alarm transmitted to the HMI (if applicable).

F. All alarm and control setpoints shall be adjustable by the Operator at the HMI unless specifically stated otherwise, even if not shown on the Drawings. These setpoints shall be password protected to allow access by only the Operators who are given clearance by the Owner. Some alarms and/or setpoints shall be hard coded in the PLC and not adjustable by the Operator. Generally, hard coded values will be alarms and/or setpoints that are not anticipated to change.

G. Runtimes for all motorized equipment shall be totalized in the PLC and indicated at the HMI with 0.1 (tenth) hour resolution even if not shown on the Drawings. Two runtimes shall be calculated. One shall be an overall accumulated runtime and the other shall have the capability to be reset by the user via the HMI. Security will be configured such that only a supervisory level user will be able to perform this reset function.

H. All flows shall be totalized in the PLC as daily totals or accumulative totals even if not shown on the Drawings. Daily totals will be reset at midnight and then displayed as "Yesterday's Total Flow" at the HMI. Flow rates and flow totals shall be indicated and recorded at the HMI. When an associated valve is closed or a pump is not running, which eliminates all possible flow through a meter, the flow totalizer shall not accumulate values caused by noise or errors in calibration.

I. All software adjustable alarm set points accessible from the HMI shall have adjustable dead bands unless specifically noted otherwise.

J. All process analog inputs shall be displayed, historically collected and trended. Low-low, low, high and high-high alarms shall be setup at the PLC for display and alarming at the HMI. Nuisance alarms, such as low turbidity, shall be inhibited. When a valve is closed or a pump is not running, the analog flow signal associated with that valve or pump shall not generate a low flow alarm, and it shall be forced to a zero valve.

K. Plant personnel must acknowledge all alarms before they can be cleared. No alarm shall clear automatically until it has been acknowledged.

L. For all variable speed pumps; if the pump is commanded to run at a specific speed and the speed feedback signal deviates from the commanded speed by a preset dead band for a preset time period, a speed deviation alarm shall be generated by the PLC for display and alarming at the HMI.

M. For all modulating valves; if the valve is commanded to a specific position and the position feedback signal deviates from the commanded position by a preset dead band for a preset time period, a valve position deviation alarm shall be generated by the PLC for display and alarming at the HMI.

N. For all controlled set points (i.e., level, flow, etc.); if a process is required to a specific setpoint, and the control variable feedback signal deviates from the requested setpoint by a preset dead band for a preset time period, a setpoint deviation alarm is generated by the PLC for display and alarming at the HMI.

O. All tuning parameters for each PLC software PID controller shall be enterable at the HMI. Tuning trends shall be provided to tune and monitor each PID operation. Tuning parameter settings shall be password protected.

P. Interlocks:

1. Hardwired interlocks will interlock the controls locally, at the vendor PLC, and at the plant PLC. If the interlock occurs, the shutdown will cause the equipment to be inoperable at all levels of control.
2. Software interlocks are represented in a particular layer of the operation description and interlock the controls in that layer and the layers above it. However, the interlock does not

interlock the commands in the layer before it. For example, a software interlock implemented at the SCADA/PLC level will not stop equipment from being controlled locally.

3. Interlocks that shutdown (stop a piece of equipment and prevent it from being restarted or moved) are displayed on the faceplate pop-up graphic for that piece of equipment.

Q. All HMI Server to PLC communications paths shall be monitored by the PLC and HMI Server for disruptions in communication. In the event that a PLC communications path is lost with the HMI, a communications alarm shall be generated at the HMI. The data associated with the lost communication PLC shall be attributed as having a "bad quality". When the HMI Server to PLC communications path is restored and the data is updated, it shall be attributed as "valid".

R. For all equipment controlled from the HMI, an Auto/Manual software switch shall be provided. In the Computer Manual mode, operator will select Manual and the equipment is selected for Remote operation locally. In the Computer Automatic mode, operator will select Auto and the equipment is selected for Remote operation locally.

S. For all pumps that are in either running condition, the color "Red" shall be used. For valves that are in open state, the color "Red" shall be used. For equipment that is in stopped or closed condition, the color "Green" shall be used.

T. For equipment such as pumps operating under continuous level control and computer automatic mode, in the event of loss of level instrument during control action, the pumps shall maintain their last controlled state. For valves, the loss of the level instrument shall force the device to fail safe condition (fail close or fail open) as configured. An alarm shall be generated at the HMI.

U. All PLC-to-PLC communications paths shall be monitored by each participating PLC for disruptions in communication. In the event that a communications path is lost (software failure, or hardware failure), data shared between the PLCs shall be attributed as having a "bad quality". At the meantime, the communication-loss alarm shall be generated and displayed in HMI. When the communications path is restored and the data is updated, it shall be attributed as "valid".

3.3 INDIVIDUAL CONTROL DESCRIPTIONS AND CONTROL SEQUENCES

LOOP: LIT-100, LIT-200
DEVICE: Wet Well Level Monitoring at Cedar Breaks and DB Wood lift stations
PLC: PLC-CB & PLC-DB
P&ID: (I-4, I-5)

General: The wet well will be monitored continuously by a non-contact radar level transmitter and will be indicated and recorded at the SCADA HMI.

Control:

<u>Local:</u>

None

SCADA:

None

Alarms/Monitoring:

Local:

Level indication (LIT-100)
Level indication (LIT-200)

SCADA PLC/OWS:

Level Indication (LI-100)
Low-Low level alarm (LALL-100)
Low Level alarm (LAL-100)
High Level alarm (LAH-100)
High-High Level alarm (LAHH-100)

Level Indication (LI-200)
Low-Low level alarm (LALL-200)
Low Level alarm (LAL-200)
High Level alarm (LAH-200)
High-High Level alarm (LAHH-200)

The level will be stored in the historian for trending and reporting.

LOOP: LSLL-100, LSL-100, LS1-100, LSH-100, LSHH-100
DEVICES: Cedar Breaks Lift Station Level Switches
PLC: PLC-CB
P&ID: (I-4)

General: The floats are provided as hardwired backup to the transmitter should the transmitter be taken out of service, or the PLC fails. The float signals are connected to a level relay panel (LRP-100) that is hardwired to all the pump starters (SSRVS-101 through 103), and as indicated in the Drawings.

Control:

Local:

The level switches shall be wired to the LRP-100. The float switches for pump control will be split at the LRP for wiring to pump starter and the PLC (PLC-CB). All three pumps will operate in lead/lag/standby configuration.

The pumps shall start/stop based on float switches in the following manner:

- When the water level reaches the lead pump "ON" level float (LS1-100), the lead pump will be called to start.
- When the water level reaches the lag pump "ON" level switch (LSH-100), the Lag pump will be called to start. Both pumps will run together.
- In case the level of water keeps increasing and the High- High level switch is activated (LSHH-100), this condition will be alarmed at SCADA.
- When the water level decreases and the 'All Pumps Stop' switch (LSL-100) is activated, both pumps will be called to stop.
- Low- Low-level lockout float (LSLL-100) will be a backup for 'All Pumps Stop' float (LSL-100). In case the Lead or Lag pumps do not stop at 'All Pumps Stop' float then Low Low-level lockout float will be activated and shall block the pumps from operating and send an alarm to SCADA but shall not lock out the pumps.

SCADA:

None

Alarms/Monitoring:

Local:

High High Level (YLH-100)
Low Low Level (YLL-100)

SCADA PLC/OWS:

Lead Pump float activation (LA1-100)
High level/Lag Pump float activation (LAH-100)
High-High Level Alarm (LAHH-100)
Low level/All Pumps shut off alarm (LAL-100)
Low Low-Level lockout Alarm (LALL-100)

LOOP: WP-101, WP-102, WP-103
DEVICES: Cedar Breaks Lift Station Submersible Sewage Pumps
PLC: PLC-CB
P&ID: (I-4)

General: Submersible pumps will operate in a Lead/Lag configuration to pump raw sewage with the third pump as standby. Pumps will automatically rotate after every pump cycle. Motor protection relays for the pumps will be located in the pump starter panel.

Control:

Local:

Local: When the Local/Remote selector switch (HS) on the pump starter panel is in the "Local" position, the pump can be controlled using the Start/Stop switches located on the pump starter panel.

Remote: When the Local/Off/Remote selector switch (HS) is in the "Remote" position, the pump control is transferred to SCADA.

SCADA:

Hardwire Interlock:

- A float level switch Low low-level lockout (LSLL) will be installed within the wet well. All motors shall be prohibited from operation and an alarm sent to SCADA upon activation of the switch.
- A pressure switch (PSH) will be installed to monitor the discharge pressure of each pump. The motor shall be prohibited from operation and an alarm sent to SCADA upon activation of the switch.
- A motor protection relay will be provided in the pump starter panel. Inputs from the motor protection relay will be wired to the pump starter. The motor shall be prohibited from operation and an alarm sent to SCADA upon activation of the seal fail or high temperature alarms.

Control:

Remote Manual:

When the Local/Remote switch at the pump starter panel is in Remote, the pumps shall be controlled by the Cedar Break PLC (PLC-CB). When the Auto/Manual switch provided at the HMI is in Manual, the operator will be able to start and stop the pumps from the HMI.

Remote Auto:

When the Auto/Manual switch provided at the HMI is in Auto, the pumps shall be controlled automatically by the PLC based on the level in the wet well. The pumps shall operate in a Lead/Lag configuration with automatic rotation after every cycle. The operator shall enter the level setpoints for the Lead and Lag pumps to start and stop. The third pump will be on standby.

a) When the level in wet well rises above the ‘Start Lead Pump’ setpoint for an adjustable amount of time, the Lead pump will be called to start.

b) As the level in the wet well continues to increase and rises above the 'Start Lag' setpoint plus an adjustable offset value, the Lag pump will be called to start.

c) The two pumps will run together until the level in the wet well drops below 'Stop All pumps' setpoint, at which all pumps will stop.

d) Third pump will be standby and will be called to start if a pump is called to operate and is not available.

Failover: When the pump is chosen as the lag pump, it shall automatically assume the lead role when original lead pump fails or is stopped by an interlock but is not stopped by the operator.

Delays: A programmable delay (in seconds) shall be programmed into the PLC to provide a delayed response to the starting and stopping of the pumps.

Rotation: Using the HMI, the operator may choose to rotate the Lead/Lag/Standby pumps manually or select an automatic rotation.

If manual rotation is selected, the operator must be able to assign lead, lag and standby before sending the command to the PLC.

If automatic rotation is selected, the pumps will rotate after every pump start/stop cycle. The Lead/Lag/ standby pumps designation shall rotate every time the pump is called to start/stop.

Once a rotation is initiated, the PLC shall start the new pump and confirm operation before stopping the original pump. At this point, the rotation is complete, and the new assignments completed. If neither pump is in operation at the time of the rotation, the new assignment will be immediate.

Alarms/Monitoring:

Local:

Pump Fault (YL-C)
High Temperature (YL-D)
High Moisture (YL-E)
High Discharge Pressure (YL-F)
Power (YL-G)
Pump Running (YL-A)
Pump Stopped (YL-B)
Elapsed Runtime Meter (ETM)

SCADA PLC/OWS:
Pump Fault (YAF)
High Temperature (TAH)
High Moisture/Seal Leak (MAH)
High Pressure Alarm (PAH)
Pump Running (YRI)
Pump in Remote (YCI)
Rotation on Manual
Rotation on Automatic

LOOP: LSLL-200, LSL-200, LS1-200, LSH-200, LSHH-200
DEVICES: DB Wood Lift Station Level Switches
PLC: PLC-DB
P&ID: (I-5)

General: The floats are provided as hardwired backup to the transmitter should the transmitter be taken out of service or the PLC fail. The float signals are connected to a level relay panel (LRP-200) that is hardwired to all the soft starters (SSRVS-201 through 203), and as indicated in the Drawings.

Control:

Local:

The level switches shall be wired to the LRP-200. The float switches for pump control will be split at the LRP for wiring to pump starter and the PLC (PLC-DB). All three pumps will operate in lead/lag/standby configuration.

The pumps shall start/stop based on float switches in the following manner:

- When the water level reaches the lead pump “ON” level float (LS1-200), the lead pump will be called to start.
- When the water level reaches the lag pump “ON” level switch (LSH-200), the lag pump will start, and both the pumps will run together.
- In case the level of water keeps increasing and the High- High level switch is activated (LSHH-200), this condition will be alarmed at SCADA.
- When the water level decreases and the ‘All Pumps Stop’ switch (LSL-200) is activated, both pumps will be called to stop.

- Low- Low-level lockout float (LSLL-200) will be a backup for 'All Pumps Stop' float (LSL-200). In case the Lead or Lag pumps do not stop at 'All Pumps Stop' float then Low Low-level lockout float will be activated and shall block the pumps from operating and send an alarm to SCADA.

SCADA:

None

Alarms/Monitoring:

Local:

High High Level (YLH-200)
Low Low Level (YLL-200)

SCADA PLC/OWS:

Lead Pump float activation (LA1-200)
High level/Lag Pump float activation (LAH-200)
High-High Level Alarm (LAHH-200)
Low level/All Pumps shut off alarm (LAL-200)
Low Low-Level lockout Alarm (LALL-200)

LOOP: WP-201, WP-202, WP-203
DEVICES: DB Wood Lift Station Submersible Sewage Pumps
PLC: PLC-DB
P&ID: (I-5)

General: Submersible pumps will operate in a Lead/Lag configuration to pump raw sewage with the third pump as standby. Pumps will automatically rotate after every pump cycle. Motor protection relays for the pumps will be located in the pump starter panel.

Control:

Local:

Local: When the Local/Remote selector switch (HS) on the pump starter panel is in the "Local" position, the pump can be controlled using the Start/Stop switches located on the starter panel.

Remote: When the Local/Off/Remote selector switch (HS) is in the "Remote" position, the pump control is transferred to SCADA.

SCADA:

Hardwire Interlock:

- A float level switch Low low-level lockout (LSLL) will be installed within the wet well. All motors shall be prohibited from operation and an alarm sent to SCADA upon activation of the switch.

- A pressure switch (PSH) will be installed to monitor the discharge pressure of each pump. The motor shall be prohibited from operation and an alarm sent to SCADA upon activation of the switch.

- A motor protection relay will be provided in the pump starter panel. Inputs from the motor protection relay will be wired to the pump starter. The motor shall be prohibited from operation and an alarm sent to SCADA upon the seal fail or high temperature alarms.

Control:

Remote Manual:

When the Local/Remote switch at the starter panel is in Remote, the pumps shall be controlled by the DB Wood PLC (PLC-DB). When the Auto/Manual switch provided at the HMI is in Manual, the operator will be able to start and stop the pumps from the HMI.

Remote Auto:

When the Auto/Manual switch provided at the HMI is in Auto, the pumps shall be controlled automatically by the PLC based on the level in the wet well. The pumps shall operate in a Lead/Lag configuration with automatic rotation after every cycle. The third pump will be on standby. The operator shall enter the level setpoints for the Lead and Lag pumps to start and stop.

e) When the level in wet well rises above the 'Start Lead Pump' setpoint for an adjustable amount of time, the Lead pump will be called to start.

f) As the level in the wet well continues to increase and rises above the 'Start Lag' setpoint plus an adjustable offset value, the Lag pump will be called to start.

g) The two pumps will run together until the level in the wet well drops below 'Stop All pumps' setpoint, at which all pumps will stop.

h) Third pump will be standby and will be called to start if another pump is called to operate and is not available.

Failover: When the pump is chosen as the lag pump, it shall automatically assume the lead role when original lead pump fails or is stopped by an interlock but is not stopped by the operator.

Delays: A programmable delay (in seconds) shall be programmed into the PLC to provide a delayed response to the starting and stopping of the pumps.

Rotation: Using the HMI, the operator may choose to rotate the Lead/Lag/ standby pumps manually or select an automatic rotation.

If manual rotation is selected, the operator must be able to assign lead, lag and standby before sending the command to the PLC.

If automatic rotation is selected, the pumps will rotate after every pump start/stop cycle. The Lead/Lag/Standby pumps designation shall rotate every time the pump is called to start/stop.

Once a rotation is initiated, the PLC shall start the new pump and confirm operation before stopping the original pump. At this point, the rotation is complete, and the new assignments completed. If neither pump is in operation at the time of the rotation, the new assignment will be immediate.

Alarms/Monitoring:

Local:
Pump Fault (YL-C)
High Temperature (YL-D)
High Moisture (YL-E)
High Discharge Pressure (YL-F)
Power (YL-G)
Pump Running (YL-A)
Pump Stopped (YL-B)
Elapsed Runtime Meter (ETM)

SCADA PLC/OWS:
Pump Fault (YAF)
High Temperature (TAH)
High Moisture/Seal Leak (MAH)
High Pressure Alarm (PAH)
Pump Running (YRI)
Pump in Remote (YCI)
Rotation on Manual
Rotation on Automatic

LOOP PV-207
DEVICES: DB Wood Lift Station Motorized Valve
PLC: PLC-DB
P&ID: I-5

General: Two motorized plug valves shall be provided on the influent pump station discharge headers as shown in the P&ID. The plug valves will be utilized in future when the second wet well is in operation. The plug valve will be operated manually to enable the pump WP-203 to be used as a swing pump. The valve PV-207 will be installed in the current project and valve PV-208 will be installed in a future project. Valve PV-207 will be kept in open position until the future pumps are installed.

Control:

Local:

Local: When the Local/Remote selector switch (HS-A) on the valve actuator is in the "Local" position, the valve can be controlled using the Open and Close switches provided on the actuator.

Remote: When the Local/Remote selector switch (HS-A) is in the "Remote" position, the valve control is transferred to SCADA.

SCADA:

Software Interlock:

None

Control:

Remote Manual: The operator will be able to open and close the valves from the HMI.

Remote Auto: None

Alarms/Monitoring:

Local:

Valve Open (ZSH)
Valve Closed (ZSL)

SCADA PLC/OWS:

Valve Open (ZSH)
Valve Closed (ZSL)
Valve in remote (L/R)

LOOP GEN-CB, GEN-DB
DEVICES: Diesel Engine Generator Status
PLC: (PLC-CB & PLC-DB)
P&ID: (I-4, I-5)

General:

The new Generator at Cedar Break lift station and DB Wood lift station will be used for monitoring generator signals and related plant equipment start logic while on generator power as shown on drawings and described herein.

Control:

Local: Refer to electrical specification 263213.13

SCADA PLC/OWS: None

Alarms / Monitoring:

Local: Refer to electrical specification 263213.13

SCADA PLC/OWS:

Generator Running
Generator Overcurrent
Generator E-Stop
Generator Over crank
Generator Low fuel
Generator DC power failure battery/ battery charger

LOOP ATS - CB, ATS - DB
DEVICES: Automatic Transfer Switch Status
PLC: (PLC-CB & PLC-DB)
P&ID: (I-4, I-5)

General:

Monitoring loss of main electrical service.

Control:

Local: Refer to electrical specification 263600

SCADA PLC/OWS: None

Alarms / Monitoring:

Local: Refer to electrical specification 263600

SCADA PLC/OWS:

ATS Normal Power
ATS Power Failure

Cedar Break & DB Wood RTU Panels monitoring and alarming
PLC: (PLC-CB & PLC-DB)
P&ID: (I-4, I-5)

General:

The Uninterrupted Power Supply (UPS), Surge Suppressor, AC Power Relay, 24V power supply, Panel intrusion switch, Panel Temperature switch shall be monitored remotely from the SCADA as shown in the drawings.

Control:

Local: None

SCADA PLC/OWS: None

Alarms / Monitoring:

Local:

UPS on Battery.
UPS Fault.
UPS Battery Low

SCADA PLC/OWS:

UPS on Battery
UPS Fault.
UPS Low Battery
120VAC Power on
AC Surge Suppressor
24V Power supply on
Panel High Temperature alarm
Panel intrusion Alarm.

END OF SECTION 406196

© 2023 CDM Smith
All Rights Reserved

SECTION 406343 - PROGRAMMABLE LOGIC CONTROLLERS

PART 1 - GENERAL

1.1 RELATED DOCUMENTS

A. Drawings and general provisions of the Contract, including General and Supplementary Conditions and Division 01 Specification Sections, apply to this Section.

1.2 SUMMARY

A. Section includes programmable logic controllers<Insert description of any other essential item included in the Section>.

B. Related Requirements:

1. Section 406100 “Process Control and Enterprise Management Systems General Provisions.”
2. Section 407000 “Instrumentation for Process Systems.”
3. Section 406717 “Industrial Enclosures.”
4. Section 406733 “Panel Wiring.”
5. Section 406763 “Control Panel Mounted UPS.”

1.3 DEFINITIONS

A. Analog Input (AI): An electrical signal (1-5 Volts DC or 4-20 milliamps, for example) to be interpreted by a PLC.

B. Analog Output (AO): An electrical signal (1-5 Volts DC or 4-20 milliamps, for example) sent from a PLC to a field device.

C. Digital/Discrete Input (DI): A binary signal (0 or 1) to be interpreted by a PLC.

D. Digital/Discrete Output (DO): A binary signal (0 or 1) sent from a PLC to a field device.

E. Input/Output (I/O): Analog or digital field instrument signals to be received and interpreted by a PLC.

F. Human Machine Interface (HMI): A software-based user interface with supervisory level control and of machine level equipment.

G. Operator Interface Terminal (OIT): A hardware component of the HMI used for device level control and monitoring.

H. Peer to Peer: Communication between two or more devices, typically PLC’s, in which each device can control the communication exchange.

I. Programmable Logic Controller (PLC): A ruggedized programmable computer used for industrial automation.

J. Remote I/O (RIO): I/O that is located remotely from the processor. Remote I/O can communicate over a variety of communication protocol and can use standard rack based I/O, or specialized Remote I/O hardware referred to as Distributed I/O.

1.4 ACTION SUBMITTALS

A. Product Data: For each type of product.

1. Refer to Section 406100 "Process Control and Enterprise Management System General Provisions."

B. Shop Drawings:

1. Refer to Section 406100 "Process Control and Enterprise Management Systems General Provisions."

1.5 INFORMATIONAL SUBMITTALS

A. Refer to Section 406100 "Process Control and Enterprise Management Systems General Provisions."

1.6 CLOSEOUT SUBMITTALS

A. Refer to Section 406100 "Process Control and Enterprise Management System General Provisions."

1.7 MAINTENANCE MATERIAL SUBMITTALS

A. Furnish extra materials, from the same product run, that match products installed and that are packaged with protective covering for storage and identified with labels describing contents.

1. Processors: Provide spare processor unit(s) for each unique processor installed.
2. Memory Cards: Provide spares for each type of card installed.
3. I/O Cards: Provide spares for each unique I/O module type installed. Provide two cards or provide 20 percent minimum of installed quantity, whichever is greater.
4. Network interfaces remote I/O, and communication modules: Provide one spare communication module for each unique communication module installed.
5. PLC Power supplies: Provide spare power supplies for each unique power supply installed.
6. Miscellaneous components (including cables): Provide spares for each unique component installed.

1.8 QUALITY ASSURANCE

A. Provide components compatible with functions required to form complete working system.

1.9 QUALIFICATIONS

A. Manufacturer: Company specializing in manufacturing products specified in this Section with minimum three years' experience, and with service facilities within 100 miles.

1.10 DELIVERY, STORAGE, AND HANDLING

A. Refer to Section 016000 “Product Requirements” for delivery, storage, and handling requirements.

1.11 FIELD CONDITIONS

A. Refer to Section 406100 “Process Control and Enterprise Management Systems General Provisions.”

1.12 WARRANTY

A. Refer to Section 406100 “Process Control and Enterprise Management Systems General Provisions.”

PART 2 - PRODUCTS

2.1 SYSTEM DESCRIPTION

A. Configuration: Networked programmable controller incorporated into the SCADA system control panels. Control panels requiring PLCs are indicated on the System Architecture Drawing for interfacing with existing SCADA system for monitoring and controlling of the lift station.

2.2 SPARE I/O, SLOTS, AND FUTURE EXPANSION

A. Spare PLC I/O:

1. Provide 20 percent minimum of four points per type AI, AO, DI, and DO for future use, regardless of whether any of those point types are used in that panel or not.
2. Provide spare I/O points of same type of I/O modules supplied.

B. Future PLC Expansion:

1. Room to expand via chassis or via networked I/O.
2. Card width based on the widest I/O card provided in panel.
3. Provide external relays for spare output points that require their use.

4. Wire all unused points on all I/O to terminal blocks in the order that they occur on the I/O modules.

2.3 COMPACT PROGRAMMABLE LOGIC CONTROLLER SYSTEM

A. Manufacturers:

1. Provide all PLCs from a single manufacturer. If the PLC manufacturer has authorized third party vendors to provide modules that are compatible with their platforms, then products manufactured by these authorized third-party vendors will be acceptable.
2. Manufacturers and their products are subject to compliance with requirements. Provide the following:

    a. Rockwell Automation Allen-Bradley – 5069 CompactLogix (L320ER)
    b. Or equal: Not Permitted.

3. CPU shall utilize the I/O cards that are specified in paragraphs C thru F of this section.

    a. Discrete Input shall utilize a 24VDC input reference.
    b. Discrete Outputs shall utilize a 24VDC sourcing signal.
    c. Any expansion I/O modules utilized while using the standard CPU shall the same 24VDC references

B. General

1. Provide processor, power supply, I/O modules, communication modules, and remote interface modules as required to meet system requirements.
2. PLC is modular based, rather than chassis-based.
3. Listed and classified by UL, CSA, or FM approval as suitable for purpose specified and indicated.
4. Contains the required memory and functional capacity to perform the specified sequence of operation with the scheduled inputs and output points.
5. Designed for continuous industrial service.
6. Provide products of a single manufacturer.
7. Provide equipment models that are currently in production.
8. In the event of power interruption, the system undergoes an orderly shutdown with no loss of memory and resumes normal operation without manual intervention when power is restored.
9. Provide PLCs that communicate between workstations, servers, instruments, switches, controllers, process actuators, etc. as shown on the Drawings.
10. PLC capable of stand-alone operation in the event of failure of the communication link to the HMI subsystem.

C. Physical:

1. Vibration: 3.5mm Peak-to-Peak, 5-9 Hz: 1.0G, 9-150 Hz. Vibration tested in accordance with IEC 68-2-6 and JIS C 0911. The system is to be operational during and after testing. Vibration Rating of 2.0G maximum peak acceleration for 10 to 500 Hz. In accordance with one of the following:

a. DIN rail mounted PLC, 10 – 57 Hz., amplitude 0.075 mm, acceleration 25-100 Hz.
b. Panel or plate mounted PLC: 2-25 Hz., amplitude 1.6mm, acceleration 25-200 Hz.
c. In compliance with IEC 60068 and IEC 61131.

2. Shock: 15G, 11msec. Shock tested in accordance with IEC 68-2-27 and JIS C 0912. The system is to be operational during and after testing.
3. Operating Temperature: 32 to 140 degrees F (0 to 60 degrees C).
4. Storage Temperature: -13 to 158 degrees F (-25 to 70 degrees C).
5. Relative Humidity: 10 to 95 percent, non-condensing.
6. Noise Immunity: Tested to operate in the high electrical noise environment of an industrial plant as governed by the following regulations: IEEE 472, IEC 801, MILSTD 461B, IEC 255-4, NEMA ICS 2-230.40, and ANSI/IEEE C-37.90A-1978.
7. Altitude (Operating): 0 to 6,500 feet (0 to 1,980 meters)
8. Altitude (Storage): 0 to 9,800 feet (0 to 2,990 meters)
9. Degree of protection: NEMA 1 (IP20).
10. All products have corrosion protection.

D. Identification

1. Identify all major assemblies and sub-assemblies, circuit boards, and devices using permanent labels or markings indicating:

a. Module product type such as analog or digital.
b. Module catalog number.
c. Module major revision number.
d. Module minor revision number.
e. Module manufacturer vendor.
f. Module serial number.

E. PLC Central Processing Unit (CPU):

1. General:

a. Minimum 16-bit microprocessor with system timing and is responsible with scheduling I/O updates with no user programming required to ensure discrete or analog update.
b. Executes user relay ladder logic programs, communicates with intelligent I/O modules, and performs on-line diagnostics.
c. Consists of a single module which solves application logic, stores the application program, stores numeric values related to the application processes and logic, and interfaces to the I/O.
d. Samples all discrete and analog inputs and outputs including internal coils and registers, and service special function modules every scan. The CPU processes the I/O with user programs(s) stored in memory and controls outputs based on the results of the logic operation.
e. Supply the CPU with a battery-backed time of day clock and calendar.
f. CPU family allows for user program transportability from one CPU model to another.

2. Diagnostics:

   a. Perform on-line diagnostics that monitor the internal operation of the PLC. If a failure is detected, initiate orderly system shutdown and fail-over. Monitor the following, at a minimum:

      1) Memory failure
      2) Memory battery low
      3) General fault
      4) Communications port failure
      5) Scan time over run
      6) I/O failure
      7) Analog or special function I/O module failure

   b. Make diagnostic information accessible to the host communications interfaces and to the PLC program.
   c. PLC indicators and on-board status area for the following conditions:

      1) CPU run.
      2) CPU error or fault.
      3) I/O failure or configuration fault.
      4) Status of Battery or back-up power module.
      5) Communications indicator.

3. Memory

   a. Provide non-volatile battery backed memory of type CMOS RAM program memory or equivalent.
   b. Memory Backup System: Provide lithium battery backup or equivalent capable of retaining all memory for a minimum of three months and a Flash memory system capable of reloading program in the event of memory loss.

      1) Backup Storage: Provide backup battery or capable of being replaced without disrupting memory integrity. Provide a visual indication of low battery voltage or module error and an alarm bit in the PLC program.
      2) Flash SD Memory Card: Provide memory card storage with capacity greater than processor memory capacity. Install memory cards in processors for factory testing.

   c. Operating system contained in non-volatile firmware.
   d. The memory containing the operating system is field updateable via a separate update tool.

4. Programming Environment

   a. Programming port: Use PLC Ethernet port for programming.
   b. On-Line programming: Application programs may be modified or stored while the CPU is running, with minimal impact on the scan time.
   c. Online programming including runtime editing.
   d. IEC 61131-3 programming languages supported: Ladder logic, function block, sequential function chart, and structured text.

e. Supply all hardware and software necessary to program the CPU in these languages.

5. Communication Ports:

a. Provide expandable CPU supplied with additional modules to support the required communication interfaces.

6. Remote I/O Communications:

a. Provide CPU capable of communicating with up to 12 remote base locations. Automatically sample and update all local and remote I/O modules each scan cycle of the CPU.
b. Provide communication link between the CPU and any RIO chassis as recommended by the PLC manufacturer.
c. Provide diagnostic and equipment status information from each RIO.
d. Provide remote I/O system with a remote input/output arrangement capable of operation at locations physically separated from the PLC CPU as detailed on the drawings.
e. Communicate with the remote I/O arrangement through cable as recommended by the PLC manufacturer and provided by the PLC system supplier under this specification Section.

F. Power Supplies:

1. Power Input: Electrical supply voltage to the PLC shall be 24VDC. PLC system power supplies shall be fused for overload protection.
2. Provide DC power supplies capable of handling ripple up to 2.4V peak to peak.
3. Power supply provide power for the processor and applicable modules.
4. Provide clearly visible LED to indicate that the incoming power is acceptable, and the output voltage is present.
5. Provide over-current and over-voltage protection designed to operate in most industrial environments without the need for isolation transformers.
6. Size power supplies to accommodate the nominal load plus 30%.
7. Provide power supplies capable of sustaining brown out conditions of at least 1/2 of a cycle, a harmonic rate of 10%, and continuous operation through momentary interruptions of AC line voltage of 10ms or less.
8. Automatically shut down the PLC system whenever its output power is detected as exceeding 125% of its rated power.
9. Provide surge protection, isolation, and outage carry-over up to 2 cycles of the AC line.

G. Discrete Input & Output Modules:

1. General:

a. Digital input and output modules provide ON/OFF detection and actuation capability.
b. Provide cards of I/O type and count as required to implement the functions specified plus an allowance for active spares, as specified herein.
c. Provide modules capable of being installed or removed while chassis power is applied.

d. Provide the following status indicators.

1) On/Off state of the field device.
2) Module's communication status.
3) Module health

2. Discrete Input Module Specifications (24 VDC Isolated Input Module)

a. Nominal Input Voltage of 24 VDC.
b. Minimum On-State Current of 2mA @ 11V; Maximum On-state Current of 3.5mA @ 24 VDC.
c. Maximum Off-State Voltage of 5V.
d. Maximum Off-State Current of 1.5 mA.
e. Number of Points per Card: 16

H. Discrete Output Module Specification (24 VDC Relay Module)

1. Each triac type discrete output shall have an associated interposing relay located in the same control panel. 120 VAC power for relay outputs shall be provided from the associated motor starter control circuit (when used with motor starters) or other 120 VAC source (when I/O is not associated with a particular motor starter).
2. Operating Voltage Range of 19-30 VDC
3. Output Current Rating

a. Per Point – 1A maximum group of channels – 1A maximum Minimum On-State Current of 1mA @ 5 VDC.

4. Number of Points per Card: 16.

I. Analog Input & Output Modules:

1. General:

a. Analog input modules convert an analog signal (1 to 5 Volts DC, 4 to 20 milliamps, for example) that is connected to the module's screw terminals into a digital value.
b. Furnish analog output modules to convert a digital value that is delivered to the module into an analog signal on the module's screw terminals.
c. Provide modules designed to be installed or removed while power is applied.
d. Provide the following status indicators:

1) Module's communication status.
2) Module health
3) Input/output devices

e. Hardware and software indication provided when a module fault has occurred. Each module provided with an LED fault indicator and the programming software displays the fault information.
f. Provide analog modules that are software configurable through the I/O configuration portion of the programming software.
g. Following status can be examined in ladder logic:

1) Module Fault Word: Provides fault summary reporting.
2) Channel Fault Word: Provides under-range, over-range and communications fault reporting.
3) Channel Status Words: Provides individual channel under-range and over-range fault reporting for process alarm, rate alarms and calibration faults.

h. Provide 24 VDC power for analog instrument loops as a part of the system. Derive 24 VDC power supply from the 120 VAC input power circuit to the PLC. Group the field side of the 24 VDC power sources(s) as individual or grouped (of logically associated circuits) fusing and provide with a readily visible, labeled blown fuse indicator.

2. Analog Input Module

a. Input Range of 0-20 mA.
b. Resolution of approximately 16 bits across range, unipolar.
c. Input Impedance of 249 Ohms.
d. Overload at input terminals: 8V ac/dc with on-board current resistor.
e. Common Mode Noise Rejection: 120 dB at 60 Hz, 100 dB at 50 Hz.
f. Isolation Voltage

1) 500 VAC or 710 VDC for one minute, group to bus.
2) 30 VAC/30 VDC working voltage.

g. Number of Points per Card: 8.

3. Analog Output Current Module

a. Output Current Range of 4 to 20 mA.
b. Current Resolution of 16 bits across 20 mA.
c. Resistive Load on Current output: 0-500 Ohms.
d. Maximum Inductive Load (Current outputs): 0.1 mH.
e. Output Overvoltage Protection – Yes.
f. Open and Short Circuit Protection – 21 mA.
g. Accuracy - plus or minus 0.35% full scale @ 25 degree C.
h. Repeatability: plus or minus 0.05%
i. Number of Points per Card: 8.

J. Communication Interfaces:

1. Supported protocols:

a. EtherNet/IP.

2. Ports:

a. Two (2) 100MB/1G Ethernet.
b. One (1) USB port.

K. Required Accessories:

1. Include all necessary cables as specified by the manufacturer. Assemble and install cables per manufacturer recommendations.

2.4 PLC SOFTWARE

A. Manufacturers:

1. Manufacturers and their products are subject to compliance with requirements. Provide the following:

    a. Provide latest version of Allen-Bradley Studio 5000 Software compatible with the supplied PLCs
    b. Or equal: Not Permitted.

B. General

1. Provide PLC configuration and application development software package complete with documentation and installation media.
2. Install the PLC software package and associated licensing and/or activation on the computers shown on the Drawings.
3. Allows for on-line/off-line program development, annotation, monitoring, debugging, uploading, and downloading of programs to the PLCs.
4. Provide all required hardware (including cables, cable adapters, etc.) for connection to PLCs.
5. Provide all software licenses required to achieve the functionality described in the Specifications.
6. Include a software license agreement allowing the Owner the right to use the software as required for any current or future modification, documentation, or development of the PLCs provide for this project.
7. Provide software capable of the following IEC 61131-3 functions:

    a. Ladder logic.
    b. Function block.
    c. Sequential function chart.
    d. Structured text.

8. Add-on instruction editor allows for the development of custom reusable function blocks. The software permits function block modification while on-line.
9. Software is Microsoft Windows-based and run on the supplied computers.
10. Software includes a security feature to prevent unauthorized personnel from modifying and downloading the programs.
11. Provide an I/O simulator which allows the PLC application load program to be tested on a PC with simulated analog and digital inputs and outputs, allowing I/O testing and debugging to be performed in a safe, isolated environment without the need for running the PLC CPU and process I/O boards.

2.5 SOURCE QUALITY CONTROL

A. Section 014000 “Quality Requirements” for requirements for testing, inspection, and analysis.

B. Testing: Test programmable controller according to NEMA IA 2.2.

PART 3 - EXECUTION

3.1 EXAMINATION

A. Examine walls, floors, roofs, and rooms for suitable conditions where Programmable Logic Controller will be installed.

B. Prepare written report, endorsed by Installer, listing conditions detrimental to performance.

C. Proceed with installation only after unsatisfactory conditions have been corrected.

3.2 INSTALLATION

A. Comply with NECA 1.

B. Wiring Method: Conceal conductors and cables in accessible ceilings, walls, and floors where possible.

C. Wiring within Enclosures: Bundle, lace, and train conductors to terminal points with no excess and without exceeding manufacturer's limitations on bending radii.

D. A.Prepare written report, endorsed by Installer, listing conditions detrimental to performance.

E. Comply with manufacturer’s recommendations for installation of all PLC hardware.

F. Maintain area free of dirt and dust during and after installation of programmable controller products.

G. Anchor PLCs within enclosures as recommended by the PLC manufacturer.

H. Ventilation slots shall not be blocked or obstructed by any means.

I. Examine areas, surfaces, and substrates to receive PLCs for compliance with requirements, installation tolerances, and other conditions affecting performance. Proceed with installation only after unsatisfactory conditions have been corrected.

J. Unloads unpack and transport equipment to prevent damage or loss.

3.3 CONNECTIONS

A. Refer to Section 260526 “Grounding and Bonding for Electrical Systems.”

3.4 IDENTIFICATION

A. Refer to drawings for tagging designations.

3.5 FIELD QUALITY CONTROL

A. Perform the following tests and inspections in accordance with the following:

1. Section 406100 “Process Control and Enterprise Management Systems General Provisions”.
2. Section 406121.20 “Process Control System Testing”.

B. Programmable Logic Controllers will be considered defective if it does not pass tests and inspections.

C. Prepare test and inspection reports in accordance with the following:

1. Section 406100 “Process Control and Enterprise Management Systems General Provisions.”
2. Section 406121.20 “Process Control System Testing.”

3.6 STARTUP SERVICE

A. Perform startup service.

1. Complete installation and startup checks according to manufacturer's written instructions.
2. Verify communications connectivity with the Owner’s existing PLCs and HMI/SCADA workstations after assigning IP addresses consistent with the Owner’s IP address scheme.

3.7 DEMONSTRATION

A. Train Owner's maintenance personnel to adjust, operate, and maintain units.

END OF SECTION 406343

© 2023 CDM Smith
All Rights Reserved

SECTION 406613 - SWITCHES AND ROUTERS

PART 1 - GENERAL

1.1 RELATED DOCUMENTS

A. Drawings and general provisions of the Contract, including General and Supplementary Conditions and Division 01 Specification Sections, apply to this Section.

1.2 SUMMARY

A. Section includes switches and routers.

B. Related Requirements:

1. Section 406100 “Process Control and Enterprise Management Systems General Provisions” for submittal requirements.
2. Section 406717 “Industrial Enclosures.”
3. Section 406343 “Programmable Logic Controllers.”
4. Section 406121.20 “Process Control System Testing”.

1.3 DEFINITIONS

A. Applications Engineering System Supplier (AESS): The entity who provides all programming, configuration, and related services for the control system equipment provided by the PCSS.

B. Control System Security Provider (CSSP): The entity who provides all programming, configuration, and services related to the implementation of cybersecurity countermeasures.

C. Fiber optic Ethernet switch (FOES): An Ethernet based networking device with a combination of fiber optic and copper physical connections.

D. Local Area Network (LAN): A localized group of network devices (e.g. buildings, homes, offices, etc..).

E. Managed Ethernet switch (MES): An Ethernet based networking device that permits the management, configuration, and monitoring of a local area network.

F. Process Control System Supplier (PCSS): The entity responsible for providing all materials, equipment, labor, and services required to achieve a fully integrated and operational control system.

G. Power over Ethernet (PoE): A method of providing electrical current over an Ethernet connection.

H. Small form-factor pluggable (SFP): A hot-pluggable network interface module connecting a device motherboard (Ethernet switch, router, etc..) to a fiber optic or copper networking cable.

I. Unmanaged Ethernet Switch (UMES): An Ethernet based networking device with a fixed configuration (i.e. “plug-and-play” devices).

J. Virtual Private Network (VPN): An encrypted connection between a private network and a public network (the internet).

K. Wide Area Network (WAN): A network that covers a broad geographic area, typically through use of a public network (e.g. communication across cities, national boundaries, etc..).

1.4 ACTION SUBMITTALS

A. Product Data: For each type of product.

1. Refer to Section 406100 “Process Control and Enterprise Management System General Provisions.”

B. Shop Drawings:

1. Refer to Section 406100 “Process Control and Enterprise Management Systems General Provisions.”

1.5 INFORMATIONAL SUBMITTALS

A. Refer to Section 406100 “Process Control and Enterprise Management Systems General Provisions.”

A. Product Test Reports: For each switch, for tests performed by manufacturer and witnessed by a qualified testing agency.

B. Evaluation Reports: For switches.

1.6 CLOSEOUT SUBMITTALS

A. Refer to Section 406100 “Process Control and Enterprise Management System General Provisions.”

1.7 MAINTENANCE MATERIAL SUBMITTALS

A. Furnish extra materials, from the same product run, that match products installed and that are packaged with protective covering for storage and identified with labels describing contents.

1. Ethernet Switch: Ethernet Switch equal to 10 percent of quantity installed, but no fewer than 1 unit.
2. Five-10ft CAT 6 cables with connectors installed.
3. Manufacturer's cables - one of each type installed.

1.8 QUALITY ASSURANCE

A. Provide components compatible with functions required to form complete working system.

1.9 TECHNOLOGY OBSOLESCENCE MITIGATION

A. Not applicable to this Section.

1.10 DELIVERY, STORAGE, AND HANDLING

A. Refer to Section 016000 “Product Requirements” for delivery, storage, and handling requirements.

1.11 FIELD CONDITIONS

A. Refer to Section 406100 “Process Control and Enterprise Management Systems General Provisions.”

1.12 WARRANTY

A. Refer to Section 406100 “Process Control and Enterprise Management Systems General Provisions.”

PART 2 - PRODUCTS

2.1 INDUSTRIAL MANAGED ETHERNET SWITCH

A. Manufacturers:

1. Manufacturers and their products are subject to compliance with requirements. Provide one of the following:

a. Allen-Bradley Stratix 5700 Series
b. Cisco Catalyst IE3400 Series
c. Moxa 5XX series
d. Or approved equal

B. General:

1. Provide a DIN rail mountable industrial managed Ethernet switch for connection to the network as shown in the Drawings and specified herein.
2. Provide ethernet switches by the same manufacturer for the project, regardless of type.

C. Physical Features:

1. Minimum SFP slots: 4 x 100/1G SFP slots.

2. Minimum Power-over-Ethernet (PoE) copper ports: 4 x 100/1G ports.

3. Minimum copper ports: 12 x 100/1G ports.
4. Operating temperature: 0 to 130 °F.
5. Power: redundant 24VDC power input.
6. Enclosure: Metal case.
7. Rating: UL Class 1, Division 2 Groups A, B, C, and D.

D. Network Features:

1. Layer 2 switching.
2. Spanning Tree Protocol (STP).
3. Rapid Spanning Tree Protocol (RSTP) (IEEE 802.1w).
4. Full duplex on all port.
5. Auto negotiation and manual configurable speed and duplex.
6. Wire speed switching fabric.
7. IGMP snooping.
8. IGMP filtering.
9. Configuration password protected.
10. Configuration backup capability required.
11. SNMP V3.
12. Lock port function for blocking unauthorized access based on MAC address.

E. Additional Features:

1. Provide dry contact rated for 120 VAC 5A to be used for common trouble alarm and programmable alarm. If the contact cannot use 120 VAC 5A, provide the necessary 24 VDC power from the PLC panel and provide interposing relays in the PLC panel.

2.2 WIRES AND CONNECTORS

A. Ethernet CAT 6 Cable:

1. Design the unshielded twisted pair cable for use with a high speed (10/100/1000 Mbps) Ethernet 10/100/1000 BASE-T/TX communications network.
2. Provide twisted pair cable with a nominal impedance 100 ohms at one MHz, a maximum attenuation of 8 dB per 1000 feet at 1 MHz. The twisted pair cable must have frequency tested up to 250 MHz or more.
3. Provide twisted pair cable that is plenum rated and with a minimum of four 23 AWG solid copper conductor pairs.
4. Provide all 10/100/1000 BASE-T/TX (RJ-45) terminations on the twisted pair cable in a professional and workmanlike manner. Provide terminations for proper strain relief on the cable jacket. Strain relief on the wire and/or wire insulation shall not be acceptable.

PART 3 - EXECUTION

3.1 EXAMINATION

A. Examine walls, floors, roofs, and rooms for suitable conditions where Switches will be installed.

B. Prepare written report, endorsed by Installer, listing conditions detrimental to performance.

C. Proceed with installation only after unsatisfactory conditions have been corrected.

3.2 INSTALLATION

A. Comply with NECA 1.

B. Wiring Method: Conceal conductors and cables in accessible ceilings, walls, and floors where possible.

C. Wiring within Enclosures: Bundle, lace, and train conductors to terminal points with no excess and without exceeding manufacturer's limitations on bending radii.

3.3 CONNECTIONS

A. Refer to Section 260526 “Grounding and Bonding for Electrical Systems.”

3.4 IDENTIFICATION

A. Refer to Drawings for tagging designations.

3.5 FIELD QUALITY CONTROL

A. Perform the following tests and inspections in accordance with the following:

1. Section 406100 “Process Control and Enterprise Management Systems General Provisions”.

2. Section 406121.20 “Process Control System Testing”.

B. Switchers and routers will be considered defective if it does not pass tests and inspections.

C. Prepare test and inspection reports in accordance with the following:

1. Section 406100 “Process Control and Enterprise Management Systems General Provisions.”

2. Section 406121.20 Process Control System Testing.

3.6 STARTUP SERVICE

A. Perform startup service.

1. Complete installation and startup checks according to manufacturer's written instructions.
2. For Managed Ethernet Switches:

a. Enable the lock port function to block unauthorized access based on MAC address for each switch and router. Assign static IP addresses to devices connecting to switch.
b. Lock down all spare switch and router ports.

3.7 SOFTWARE SERVICE AGREEMENT

A. Not Required.

3.8 DEMONSTRATION

A. Train Owner's maintenance personnel to adjust, operate, and maintain units.

END OF SECTION 406613

© 2023 CDM Smith
All Rights Reserved

SECTION 406650 - RADIO TELEMETRY EQUIPMENT

PART 1 - GENERAL

1.1 RELATED DOCUMENTS

A. Drawings and general provisions of the Contract, including General and Supplementary Conditions and Division 01 Specification Sections, apply to this Section.

1.2 SUMMARY

A. Section includes radio telemetry equipment.

B. Related Requirements:

1. Section 406100 “Process Control and Enterprise Management Systems General Provision.”
2. Section 406121.20 “Process Control System Testing.”
3. Section 406653 “Antennas.”
4. Section 406717 “Industrial Enclosures.”

C. Obtain required Construction permits for equipment installation.

D. If required, radio licenses will be obtained by the Contractor.

E. Meet all applicable federal (FCC, etc.), state, and local codes and regulations.

1.3 DEFINITIONS

A. Registered Communications Distribution Designer (RCDD)

B. Transmitter (Tx) and Receiver (Rx): An electrical device that either produces or receives radio wave with an antenna.

1.4 ACTION SUBMITTALS

A. Provide shop drawings and product data, in accordance with Section 013300 “Submittal Procedures”, showing materials of construction and details of installation for:

1. Data sheets and catalog literature for hardware (radios and accessories)
2. Physical dimension drawings
3. Antenna tower details and structural calculations
4. Installation and interconnection/wiring diagrams depicting the proposed installation of the equipment, in conformance to the requirements specified on the Plans. Detail these drawings to the extent that they may be modified after installation to serve as the "AS-BUILT" drawings.

a. A complete telemetry system block diagram(s) showing in schematic form, the interconnections between major hardware components. Reference all interconnecting cabling requirements for digital components of the system including any data communication links.
b. Equipment specification sheets that fully describe the device, the intended function, how it operates and its physical environmental and performance characteristics. As a minimum the specification sheets include the following:

1) Dimension, rigid clearances.
2) Mounting or installation details.
3) Connection.
4) Electrical power requirements.
5) Materials of construction.
6) Environmental characteristics.
7) Performance characteristics.

c. Submit all planning information, site preparation instructions, grounding and bonding procedures, cabling diagrams, plug identifications, safety precautions or guards, and equipment layouts to enable the Supplier to proceed with the detailed site preparation for the equipment.

B. Radio Path Study and Survey

1. Perform a computer-based radio coverage study to calculate anticipated fade margin. Include the following in the propagation model:

a. Longitude, latitude, and elevation of transmitter (Tx) and receiver (Rx) antennas.
b. Power (dBm) and antenna gains (dBi) of the system.
c. Receiver threshold level (dBm)
d. System loss (dB) due to Tx/Rx line and connectors losses, and path losses including free-space, diffraction, foliage, and atmospheric absorption.
e. Calculated and manufacturer recommended fade margins.

2. Perform a field radio path survey to ensure minimum signal strength requirements for each communication link are met. Submit the results of the radio path analysis to the Engineer for review.

a. Make changes as needed to the radio system to provide a system which can demonstrate an acceptable fade margin (greater than 20dB above Rx threshold) on all radio paths in both directions. If a suitable radio path is not available, provide repeater radios in the network, with the quantity and location of the repeater sites determined in the field.

1.5 INFORMATIONAL SUBMITTALS

A. Refer to Section 406100 “Process Control and Enterprise Management Systems General Provisions” for any PCSS requirements regarding informational submittals for instruments.

B. Product Test Reports: For each radio telemetry equipment for tests performed by manufacturer and witnessed by a qualified testing agency.

C. Evaluation Reports: For radio telemetry equipment.

1.6 CLOSEOUT SUBMITTALS

A. Refer to Section 406100 "Process Control and Enterprise Management System General Provision"

1.7 MAINTENANCE MATERIAL SUBMITTALS

A. Furnish extra materials, from the same product run, that match products installed and that are packaged with protective covering for storage and identified with labels describing contents.

1. Radios: Full-size units, equal to 10 percent of quantity installed for each type installed, but no fewer than 2 units.

1.8 QUALITY ASSURANCE

A. Provide components compatible with functions required to form complete working system.

1.9 TECHNOLOGY OBSOLESCENCE MITIGATION

A. Not applicable to this Section.

1.10 DELIVERY, STORAGE, AND HANDLING

A. Refer to Section 406100 "Process Control and Enterprise Management Systems General Provisions."

1.11 FIELD CONDITIONS

A. Refer to Section 406100 "Process Control and Enterprise Management Systems General Provisions."

1.12 WARRANTY

A. Refer to Section 406100 "Process Control and Enterprise Management Systems General Provisions."

PART 2 - PRODUCTS

2.1 SPREAD SPECTRUM RADIOS (900 MHZ)

A. Manufacturers

1. Manufacturers and their products are subject to compliance with requirements. Provide the following:

a. 4RF Aprisa SRi (Part #: APSI-N915-SSC-SO-22-C1AA)
b. Substitutions Not Permitted.

B. General

1. Point- to- Multipoint (PMP)
2. Serial and Ethernet (router or bridge mode)

C. Radio Specifications

1. Frequency Band: 902 – 928 MHz
2. Channel Size: 50KHz
3. Number of channels per HOP zone: 50
4. Full band option: 400 channels full band single zone
5. Zone/Channel selection: Zone selection list and channel black list
6. Frequency Stability: plus or minus 0.5 ppm
7. Frequency aging: < 1 ppm/ annum
8. Occupied bandwidth: 50KHz

D. Interfaces

1. Ethernet: 2 ports RJ45 10/100 Base – T switch
2. Serial: 2 ports RJ 45, RS-232 with additional RS-232 / RS-485 port via USB converter (optional)
3. Management: 1 x USB micro type B (device port), 1 X USB stand type A (host port), 1 X alarm port RJ 45.
4. Antenna: 1 X TNC 50-ohm female
5. LEDs: Status: OK, MODE, AUX, TX, RX, Diagnostics: RSSI, traffic port status.
6. Test Button: Toggles LEDs between diagnostics / Status

E. Environmental

1. Operating Temperature: -40°C to + 70°C (-40 to + 158 degree Fahrenheit)
2. Humidity: Maximum 95% non-condensing.

F. Electrical

1. Input Power: 10 to 30VDC
2. Receive: < 4.5 W
3. Transmitter: < 15 W

2.2 TRANSMISSION CABLE AND ACCESSORIES

A. Manufacturers

1. Manufacturers and their products are subject to compliance with requirements. Provide one of the following:

   a. CommScope LDF4-50A
   b. Polyphaser
   c. Times Microwave LMR-600
   d. Or equal

B. General

1. A single continuous piece of transmission cable shall be provided and installed between the antenna and the radio at all sites.
2. The cable shall be compatible with the furnished radios and antennas.

C. Type:

1. Low-loss foam dielectric coaxial cable

D. Function/Performance:

1. Cable Impedance: 50 ohms plus/minus 1 ohm.
2. Capacitance: 23.4 pF/ft
3. Dielectric Constant: 1.32

E. Physical:

1. Copper-clad aluminum wire
2. Jacket material: polyethylene
3. Dielectric: foam polyethylene
4. Outer conductor: corrugated copper or aluminum tape
5. Nominal diameter: 1/2 inch
6. Operating Temperature: -40 deg F (-40 deg C) to 185 deg F (85 deg C)
7. Connectors: Type N, terminated at both ends of the transmission cable.

F. Required Accessories:

1. Wrap outdoor coaxial connectors with two layers of Scotch Super 88 UV resistant tape, and then coated with two layers of Scotch-Kote.
2. Provide two (2) coaxial cable grounding kits for each transmission cable.
3. Provide one 3-foot section of “super flexible” jumper cable with type N connectors to connect between the radio and the transmission cable.
4. Provide coaxial cable hanger kits and clamping hardware. Anchor antenna cable in three-foot intervals on the antenna mast/tower.
5. Provide lightning protectors between transmission cable and coaxial jumper cable. Refer to Section 406717 “Industrial Enclosures” for lightning protector requirements.

2.3 RADIO DIAGNOSTIC SOFTWARE

A. Manufacturers

1. Same manufacturer as radio equipment

B. Function/Performance:

1. Manufacturer provided software includes configuration and diagnostic capabilities to set up and modify operating parameters of each radio in the field.
2. Monitors system communication and provide statistics on communications performance and throughput.
3. Configurable from Windows 10 based PC.

2.4 SOURCE QUALITY CONTROL

A. Prepare test and inspection reports.

PART 3 - EXECUTION

3.1 EXAMINATION

A. Examine process area for suitable conditions where radio telemetry equipment will be installed.

B. Prepare written report, endorsed by Installer, listing conditions detrimental to performance.

C. Proceed with installation only after unsatisfactory conditions have been corrected.

3.2 INSTALLATION

A. Install radio telemetry system as shown on the Drawings and in accordance with manufacturer's instructions and approved shop drawings.

B. Engineer/Owner to approve exact installation locations during construction. Provide all labor and materials necessary to complete the work in an approved manner.

C. Execute all work in accordance with codes and local rulings. Should any work be performed contrary to said rulings, ordinances and regulations, the system supplier bears full responsibility for such violations and assume all costs arising there from.

D. Comply with NECA 1.

E. Wiring Method: Conceal conductors and cables in accessible ceilings, walls, and floors where possible.

F. Wiring within Enclosures: Bundle, lace, and train conductors to terminal points with no excess and without exceeding manufacturer's limitations on bending radii.

3.3 CONNECTIONS

A. Refer to Section 260526 “Grounding and Bonding for Electrical Systems.”

3.4 IDENTIFICATION

A. Refer to drawings for tagging designations

3.5 FIELD QUALITY CONTROL

A. Perform the following tests and inspections with the assistance of a factory-authorized service representative in accordance with the following::

1. Section 406100 “Process Control and Enterprise Management Systems General Provisions”.
2. Section 406121.20 “Process Control System Testing”.

B. Radio Telemetry Equipment will be considered defective if it does not pass tests and inspections.

C. Prepare test and inspection reports in accordance with the following:

1. Section 406100 “Process Control and Enterprise Management Systems General Provisions.”
2. Section 406121.20 “Process Control System Testing.”

3.6 STARTUP SERVICE

A. Perform startup service.

1. Complete installation and startup checks according to manufacturer's written instructions.

3.7 ADJUSTING

A. Position directional antennas for maximum received signal strength.

B. Adjust transmitter power if needed to comply with FCC rules and regulations before acceptance testing.

C. Adjust hardware to function smoothly and lubricate as recommended by manufacturer.

3.8 DEMONSTRATION

A. Train Owner's maintenance personnel to adjust, operate, and maintain units.

END OF SECTION 406650

© 2023 CDM Smith
All Rights Reserved

This page intentionally left blank.

© 2023 CDM Smith
All Rights Reserved

SECTION 406663 - ANTENNAS

PART 1 - GENERAL

1.1 RELATED DOCUMENTS

A. Drawings and general provisions of the Contract, including General and Supplementary Conditions and Division 01 Specification Sections, apply to this Section.

1.2 SUMMARY

A. Section includes antennas for radio telemetry.

B. Provide identical antennas as much as possible throughout the system to reduce spare parts inventory.

C. Related Requirements:

1. Section 406100 "Process Control and Enterprise Management Systems General Provision."
2. Section 406121.20 "Process Control System Testing."
3. Section 406650 "Radio Telemetry Equipment."
4. Section 406717 "Industrial Enclosures."

D. Obtain required Construction permits for equipment installation.

E. Meet all applicable federal (FCC, etc.), state, and local codes and regulations.

1.3 DEFINITIONS

A. Citizen Band Radio Service (CBRS): Frequency band of 3550-3700 MHz (3.5 GHz band) reserved for private two-way, short-distance communication.

B. Voltage Standing Wave Ratio (VSWR): The measure of reflected power on a transmission line, expressed as a ratio of reflected voltage (V_{max}) to ideal voltage (V_{min}). An ideal system will have 100% energy transmitted, resulting in a VSWR of 1.0, or 1:1.

C. Yagi-Uda antenna (YAGI): A directional antenna consisting of parallel arrays of similar elements, typically half-wave dipoles.

1.4 ACTION SUBMITTALS

A. Provide shop drawings and product data, in accordance with Section 013300 "Submittal Procedures," showing materials of construction and details of installation for:

1. Data sheets and catalog literature for hardware (radios and accessories)

2. Physical dimension drawings
3. Antenna tower details and structural calculations
4. Installation and interconnection/wiring diagrams depicting the proposed installation of the equipment, in conformance to the requirements specified on the Plans. Detail these drawings to the extent that they may be modified after installation to serve as the "AS-BUILT" drawings.

    a. A complete telemetry system block diagram(s) showing in schematic form, the interconnections between major hardware components. Reference all interconnecting cabling requirements for digital components of the system including any data communication links.
    b. Equipment specification sheets that fully describe the device, the intended function, how it operates and its physical environmental and performance characteristics. As a minimum the specification sheets include the following:

        1) Dimension, rigid clearances.
        2) Mounting or installation details.
        3) Connection.
        4) Electrical power requirements.
        5) Materials of construction.
        6) Environmental characteristics.
        7) Performance characteristics.

    c. Submit all planning information, site preparation instructions, grounding and bonding procedures, cabling diagrams, plug identifications, safety precautions or guards, and equipment layouts to enable the Supplier to proceed with the detailed site preparation for the equipment.

1.5 INFORMATIONAL SUBMITTALS

A. Refer to Section 406100 “Process Control and Enterprise Management Systems General Provisions” for any PCSS requirements regarding informational submittals for instruments.

B. Product Test Reports: For each Antennas, for tests performed by manufacturer and witnessed by a qualified testing agency.

C. Evaluation Reports: For Antennas.

1.6 CLOSEOUT SUBMITTALS

A. Refer to Section 406100 “Process Control and Enterprise Management System General Provisions.”

1.7 MAINTENANCE MATERIAL SUBMITTALS

A. None Required

1.8 QUALITY ASSURANCE

A. Provide components compatible with functions required to form complete working system.

1.9 DELIVERY, STORAGE, AND HANDLING

A. Refer to Section 406100 "Process Control and Enterprise Management System General Provisions."

1.10 FIELD CONDITIONS

A. Refer to Section 406100 "Process Control and Enterprise Management System General Provisions."

1.11 WARRANTY

A. Refer to Section 406100 "Process Control and Enterprise Management Systems General Provisions"

PART 2 - PRODUCTS

2.1 OMNIDIRECTIONAL ANTENNAS (900 MHz)

A. Manufacturers

1. Manufacturers and their products are subject to compliance with requirements. Provide one of the following:

a. Laird FG Series
b. L-Com 900 MHz PRO series
c. RFS Celwave
d. Or equal

B. Type:

1. 902-928 MHz omnidirectional antenna

C. Function/Performance:

1. Gain: 6 dBi or greater, as required for acceptable performance. Refer to radio survey for requirements for antenna gain and elevation.
2. Max power input: 100 W (50 dBm)
3. Impedence: 50 Ohms
4. Polarization: Vertical
5. VSWR: <1.5:1
6. Lightning protection: DC ground
7. Operating Temperature: -40 to 140 degrees F (-40 to 60 degrees C)

8. Rated Wind Speed: 130 mph

D. Physical:

1. Material: High density fiberglass with ultraviolet inhibiting coating.
2. Connector: Female type N
3. Radome Diameter: 1.5-inches
4. Gold anodized or stainless steel mounting sleeve
5. RoHS compliant

E. Required Accessories:

1. Provide lightning protectors between transmission cable and coaxial jumper cable. Refer to Section 406717 "Isolators, Intrinsically Safe Barriers, and Surge Suppressors" for lightning protector requirements.
2. Provide mounting brackets and hardware suitable for the installation location shown on the drawings and as recommended by the antenna manufacturer.

2.2 YAGI DIRECTIONAL ANTENNAS (900 MHz)

A. Manufacturers

1. Manufacturers and their products are subject to compliance with requirements. Provide one of the following:

   a. Laird Y Series
   b. L-Com 900 MHz Y Series
   c. PCTEL Maxrad
   d. Or equal

B. Type:

1. 902-928 MHz yagi directional antenna
2. Seamless boom with 3 to 6 parallel detector elements

C. Function/Performance:

1. Gain: 8 dBi or greater, as required for acceptable performance. Refer to radio survey for requirements for antenna gain and elevation.
2. Max power input: 150 W (51.7 dBm)
3. Impedence: 50 Ohms
4. Horizontal Beamwidth: 52 to 54 degrees
5. Vertical Beamwidth: 45 to 48 degrees
6. VSWR: < 1.5:1
7. Lightning protection: DC ground
8. Operating Temperature: -40 to 185 degrees F (-40 to 85 degrees C)
9. Rated Wind Speed: 135 mph

D. Physical:

1. Construction: Fully welded, black or gold anodized.
2. Connector: Female type N
3. Boom Diameter: 3/4-inch to 1-inch
4. Boom Material: Heat treated 6061-T6 Aluminum
5. Element Diameter: 1/8-inch to 3/8-inch
6. Element Material: Heat treated 6061-T6 Aluminum
7. Gold anodized or stainless steel mounting plate
8. RoHS compliant

E. Required Accessories:

1. Provide lightning protectors between transmission cable and coaxial jumper cable. Refer to Section 406717 “Industrial Enclosures” for lightning protector requirements.
2. Provide mounting brackets and hardware suitable for the installation location shown on the drawings and as recommended by the antenna manufacturer.

2.3 SOURCE QUALITY CONTROL

A. Section 014000 “Quality Requirements” for requirements for testing, inspection, and analysis.

B. Provide shop inspection and testing of completed assembly.

PART 3 - EXECUTION

3.1 EXAMINATION

A. Examine process connections, walls, floors, and roofs for suitable conditions where antennas are is installed.

B. Prepare written report, endorsed by Installer, listing conditions detrimental to performance.

C. Proceed with installation only after unsatisfactory conditions have been corrected.

3.2 INSTALLATION

A. Comply with NECA 1.

B. Wiring Method: Conceal conductors and cables in accessible ceilings, walls, and floors where possible.

C. Wiring within Enclosures: Bundle, lace, and train conductors to terminal points with no excess and without exceeding manufacturer's limitations on bending radii.

3.3 CONNECTIONS

A. Refer to Section 260526 “Grounding and Bonding for Electrical Systems.”

3.4 IDENTIFICATION

A. Refer to item in this specification for tagging designation

3.5 FIELD QUALITY CONTROL

A. Perform the following tests and inspections with the assistance of a factory-authorized service representative in accordance with the following:

1. Section 406100 “Process Control and General Provisions”.
2. Section 406121.20 “Process Control System Testing”.

B. Antennas are considered defective if it does not pass tests and inspections.

C. Prepare test and inspection reports.

3.6 STARTUP SERVICE

A. Perform startup service.

1. Complete installation and startup check according to manufacturer's written instructions.

3.7 DEMONSTRATION

A. Train Owner's maintenance personnel to adjust, operate, and maintain units.

END OF SECTION 406663

© 2023 CDM Smith
All Rights Reserved

SECTION 406666 – MONOPOLES AND TOWERS

PART 1 - GENERAL

1.1 RELATED DOCUMENTS

A. Drawings and general provisions of the Contract, including General and Supplementary Conditions and Division 01 Specification Sections, apply to this Section.

1.2 SUMMARY

A. Section includes monopoles and towers for radio telemetry.

B. Related Requirements:

1. Section 406100 "Process Control and Enterprise Management Systems General Provision."
2. Section 406121.20 "Process Control System Testing."
3. Section 406650 "Radio Telemetry Equipment."
4. Section 406663 "Antennas."

C. Obtain required Construction permits for equipment installation.

D. Meet all applicable federal (FCC, FAA, etc.), state, and local codes and regulations.

1.3 ACTION SUBMITTALS

A. Provide shop drawings and product data, in accordance with Section 013300 "Submittal Procedures", showing materials of construction and details of installation for:

1. Data sheets and catalog literature for hardware (radios and accessories).
2. Physical dimension drawings.
3. Antenna tower details and structural calculations. Submit structural calculations for the antenna foundation signed and sealed by a Registered Structural Professional Engineer in the state where it will be installed for approval.
4. Installation and interconnection/wiring diagrams depicting the proposed installation of the equipment, in conformance to the requirements specified on the Plans. Detail these drawings to the extent that they may be modified after installation to serve as the "AS-BUILT" drawings.

    a. A complete telemetry system block diagram(s) showing in schematic form, the interconnections between major hardware components. Reference all interconnecting cabling requirements for digital components of the system including any data communication links.
    b. Equipment specification sheets that fully describe the device, the intended function, how it operates and its physical environmental and performance characteristics. As a minimum the specification sheets include the following:

1) Dimension, rigid clearances.
2) Mounting or installation details.
3) Connection.
4) Electrical power requirements.
5) Materials of construction.
6) Environmental characteristics.
7) Performance characteristics.

c. Submit all planning information, site preparation instructions, grounding and bonding procedures, cabling diagrams, plug identifications, safety precautions or guards, and equipment layouts to enable the Supplier to proceed with the detailed site preparation for the equipment.

1.4 INFORMATIONAL SUBMITTALS

A. Refer to Section 406100 "Process Control and Enterprise Management Systems General Provisions" for any PCSS requirements regarding informational submittals for instruments.

B. Product Test Reports: For each monopoles and towers, for tests performed by manufacturer and witnessed by a qualified testing agency.

C. Evaluation Reports: For monopoles and towers.

1.5 CLOSEOUT SUBMITTALS

A. Refer to Section 406100 "Process Control and Enterprise Management System General Provisions."

1.6 QUALITY ASSURANCE

A. Provide components compatible with functions required to form complete working system.

1.7 DELIVERY, STORAGE, AND HANDLING

A. Refer to Section 016000 "Product Requirements" for delivery, storage, and handling requirements.

1.8 FIELD CONDITIONS

A. Refer to Section 406100 "Process Control and Enterprise Management System General Provisions."

1.9 WARRANTY

A. Refer to Section 406100 "Process Control and Enterprise Management Systems General Provisions".

PART 2 - PRODUCTS

2.1 ANTENNA POLES AND TOWERS

A. Manufacturers:

1. Manufacturers and their products are subject to compliance with requirements. Provide one of the following:

a. Radian Communications / Rohn Products
b. Trylon TSF
c. American Tower Company
d. Valmont Industries
e. Or equal

B. Type:

1. Metallic pole or tower.
2. Used for antenna mounting at radio telemetry sites.

C. Physical:

1. Height as required to achieve a functional system while meeting permited regulations.
2. Designed without the need of guy wires. Erect tower to meet all local and TIA/EIA codes.
3. Grounding connections from the pole/tower to the grounding grid. Ground in accordance with the electrical specifications and drawings.
4. Tower installation capable of withstanding winds and icing defined in TIA-222 Revision G.
5. Mast and foundation capable of withstanding wind and debris requirements per Building Code.
6. Foundation:

a. Unless shown otherwise, provide a foundation for each tower or pole.
b. Concrete foundation and anchor bolts provided under other related Sections.
c. Refer to Divisions 03 and 31 for foundation and excavation requirements.

7. Metallic Poles:

a. Poles (not on towers) shorter than 20 feet constructed of 2-inch schedule 40 galvanized steel or 2-inch schedule 80 aluminum tubing.

8. Towers:

a. Free-standing, rated up to a height of 100 feet. Final height of tower to be determined by the supplier/contractor and to be in conformance with the radio survey.
b. Hot-dipped galvanized steel support structure.
c. Tower consists of three vertical faces fabricated of high grade steel tubing with steel angle braces.

d. Structural components hot-dipped galvanized after fabrication.
e. Fabricated in 20-foot riser sections, each section being 6-inches smaller on each face than the lower section to which it is connected.
f. Double bolt holes at each connection joint for each section.
g. Sections are die-cut equilateral construction with center sections containing steel angle braces between each set of braces.
h. Top section of the tower provided with 2-in pipe projection (top tube) projecting 30-inches above the tower (total length of top tube to be 52-inches).
i. Section Fabrication:

1) Top section: 1-1/4-inch, 14 gauge tubing minimum.
2) Center section: 1-1/2-inch, 12 gauge tubing minimum.
3) Bottom section: 2-inch, 10 gauge tubing minimum.

j. Provide each leg of the bottom support section with thick steel base plate, welded to the bottom of the section.

D. Required Accessories:

1. Provide stainless steel mounting hardware and fasteners for each installation, appropriate for the specific location and application.
2. Hangers for attaching cables to support brackets.
3. For structures exceeding 200 feet above ground level, provide a white and red medium intensity strobe light system to meet FAA requirements. Provide all required strobes, controllers, and wiring between components for a fully operational system that illuminates a white strobe during daytime and red strobe during the night. Provide lighting system by TWR Lighting, Inc., or approved equal.
4. Provide all necessary support posts, brackets, threaded rods, trapezes, etc., required for the ice bridge and coaxial cable/waveguide support installation. All components constructed from hot dip galvanized steel, except for threaded rods for the trapeze support which are constructed from stainless steel. Support the cable ice bridge by galvanized posts at a height minimum of 8-ft. above ground level. Cable Ice bridge provided with snap in hangers for up to 14 feed lines.
5. Provide safety cable assembly including medium size harness with safety clamps, all necessary restrainers, top and bottom attachments, length of EHS cable required to reach the top of the ladder, and all necessary nuts and bolts.

2.2 SOURCE QUALITY CONTROL

A. Section 014000 “Quality Requirements” for requirements for testing, inspection, and analysis.

B. Provide shop inspection and testing of completed assembly.

PART 3 - EXECUTION

3.1 EXAMINATION

A. Prepare written report, endorsed by Installer, listing conditions detrimental to performance.

B. Proceed with installation only after unsatisfactory conditions have been corrected.

3.2 COATINGS AND FINISHES

A. All tower painting in accordance with AWWA D102, the Steel Structures Painting Council Specification SSPCPA1, approved paint manufacturer specifications, and as specified herein.

B. Paint system provided by a single manufacturer. The paints and paint products specified herein are manufactured by Tnemec Company and are intended to establish a standard of quality, other types may be used.

C. Do not apply paint if the temperature of the surface to be painted is below the minimum temperature specified by the paint manufacturer, or less than 4 degrees above the dew point temperature. Do not apply paint to wet or damp surfaces or when the relative humidity exceeds 85 percent. Follow paint manufacturer's recommendations for the specific paint system used.

D. After erection and before painting, remove slag, weld metal splatter and sharp edges, points and protrusions by chipping or grinding. Ground all surfaces that have been welded, abraded, or otherwise damaged to a smooth, rounded, surface, cleaned and primed in the field in accordance with the paint system requirements. Normal rippling of field welds is acceptable, following the above grinding.

E. Coat all areas blasted in the field on the same day before any rusting occurs.

F. Clean shop primed components that are not painted with successive coats within the manufacturer's recommended recoat cycle in accordance with SSPC-SP7 - Brush-Off Blast Cleaning.

3.3 INSTALLATION

A. Comply with NECA 1.

B. Wiring Method: Conceal conductors and cables in accessible ceilings, walls, and floors where possible.

C. Wiring within Enclosures: Bundle, lace, and train conductors to terminal points with no excess and without exceeding manufacturer's limitations on bending radii.

3.4 CONNECTIONS

A. Refer to Section 260526 "Grounding and Bonding for Electrical Systems."

B. Provide the tower base and guy anchor grounding kits for a complete tower grounding system.

C. Ground rods and their connection to the tower in compliance with NFPA 780.

D. Provide three ground rods for each tower base. Connect all three tower base legs to the ground rods using #4 bare copper ground wire and exothermic weld connections.

E. Provide connection to building grounding where cabling enters the building and of ice bridge structure at the building using #4 bare copper ground wire and exothermic weld connections.

F. Provide all necessary ground lugs and clamps.

G. Provide lightning rod assembly(s) bonded directly to the top of the tower structure.

H. Connect tower grounding system, ice bridge grounding system and building grounding system together using #4 bare copper ground wire and exothermic weld connections to create a common ground between all structures/systems.

I. Exothermically bond the ice bridge to one of the tower ground pigtails and building ground pigtail with bare 4/0 copper cable.

J. No bends or curves with a radius of less than 12 inches, or sharper than 70 degrees may be made in any down conductor or other grounding wire.

K. Upon completion of this work, test the ground system to determine if the desired ground resistance of 5 Ohms maximum has been attained. If the grounding system does not meet the 5 Ohms requirement during this test, install additional radials or a chemical ground rod(s) as required in order to meet the grounding requirement.

3.5 FIELD QUALITY CONTROL

A. Perform the following tests and inspections with the assistance of a factory-authorized service representative in accordance with the following:

1. Section 406100 “Process Control and General Provisions”.
2. Section 406121.20 “Process Control System Testing”.

B. Monopoles and towers are considered defective if it does not pass tests and inspections.

C. Prepare test and inspection reports.

END OF SECTION 406666

© 2023 CDM Smith
All Rights Reserved

SECTION 406717 – INDUSTRIAL ENCLOSURES

PART 1 - GENERAL

1.1 RELATED DOCUMENTS

A. Drawings and general provisions of the Contract, including General and Supplementary Conditions and Division 01 Specification Sections, apply to this Section.

1.2 SUMMARY

A. Section includes industrial enclosures.

B. Related Requirements:

1. Section 406100 "Process Control and Enterprise Management Systems General Provisions" for submittal requirements.
2. Section 406733 "Panel Wiring."
3. Section 406121.20 "Process Control System Testing".

1.3 DEFINITIONS

A. Not used.

1.4 ACTION SUBMITTALS

A. Product Data: For each type of product.

1. Refer to Section 406100 "Process Control and Enterprise Management System General Provisions."

B. Shop Drawings:

1. Refer to Section 406100 "Process Control and Enterprise Management Systems General Provisions."
2. Provide heat load calculations for all control panels confirming that internal panel temperatures will not exceed the operating temperature ratings of all internal components and any environmental control that will be used to prevent the temperature within the panel from rising.

1.5 INFORMATIONAL SUBMITTALS

A. Refer to Section 406100 "Process Control and Enterprise Management Systems General Provisions."

B. Product Test Reports: For each Industrial Enclosure and accessories, for tests performed by manufacturer and witnessed by a qualified testing agency.

C. Evaluation Reports: For Industrial Enclosure and accessories.

1.6 CLOSEOUT SUBMITTALS

A. Refer to Section 406100 "Process Control and Enterprise Management System General Provisions."

1.7 MAINTENANCE MATERIAL SUBMITTALS

A. Furnish extra materials, from the same product run, that match products installed and that are packaged with protective covering for storage and identified with labels describing contents.

1. Timers and sockets - Two of each type installed.
2. Relays and sockets - Two of each type installed.
3. Fuses and circuit breakers - 10 percent (minimum of 10 fuses and 2 circuit breakers) of each type and size installed.
4. Light bulbs - 10 percent (minimum of 10) of each type installed. For LED type lights, 5 percent (minimum of 3) of each color installed.
5. Surge protectors – two of each type installed.
6. Panel Mounted power supplies - one of each type installed.
7. Selector switches/pushbuttons - Two of each type installed including contact blocks.
8. Corrosion Vaporizing Inhibitors – two-year supply as calculated for the cabinet's volume and surface area.
9. Touch-up Paint: Provide touch-up paint of each type and color used for all cabinets, panels, and consoles supplied.

1.8 QUALITY ASSURANCE

A. Perform work in accordance with UL 508.

B. Provide components compatible with functions required to form complete working system.

C. Provide UL 508 label on complete assembly.

D. Maintain copies of panel drawings on site.

1.9 DELIVERY, STORAGE, AND HANDLING

A. Refer to Section 016000 "Product Requirements" for delivery, storage, and handling requirements.

1.10 FIELD CONDITIONS

A. Refer to Section 406100 "Process Control and Enterprise Management Systems General Provisions."

1.11 WARRANTY

A. Refer to Section 406100 "Process Control and Enterprise Management Systems General Provisions."

PART 2 - PRODUCTS

2.1 INDUSTRIAL ENCLOSURES

A. Manufacturers

1. Manufacturers and their products are subject to compliance with requirements. Provide one of the following:

a. nVent: Hoffman.
b. Rittal.
c. Saginaw.
d. Or equal

B. Structure and Enclosure

1. Panels in indoor, dry, non-corrosive environments:

a. NEMA 12, painted steel or aluminum construction, as required by the schedule in PART 3.

2. Panels in outdoor, wet, or chemically corrosive environments:

a. NEMA 4X, stainless-steel or FRP construction, as required by the schedule in PART 3.

3. Panels located in hazardous locations:

a. Rated for the type of hazard (e.g., NEMA 7 for Class 1, Division 1).

4. Construction:

a. Freestanding and floor-mounted vertical panels.
b. Wall and Unistrut mounted panels.
c. Consoles.

5. Provide angle stiffeners on the back of the panel face to prevent panel deflection under instrument loading or operation, as follows:

a. Structural framework internal to the panel allows for instrument support and panel bracing.
b. Interior structure framework to permit panel lifting without racking or distortion.
c. Removable lifting rings designed to facilitate simple, safe rigging, and lifting of the control panels during installation.

6. Full height and fully gasketed access door with full-length, continuous, piano type stainless steel hinges with stainless steel pins.

   a. Provide doors with three-point stainless steel latch and heavy-duty stainless-steel locking handle.
   b. Provide front access doors of sufficient width to permit instrument or control device mounting without interference from flush mounted instruments.
   c. Clamp-type door latches are not permitted.

7. Avoid kinks and sharp bends in wiring.

   a. Route wiring for easy access to other components for maintenance and inspection purposes.

8. Panel suitable for top and bottom conduit entry as required by the Electrical Drawings.

   a. For top mounted conduit entry, provide panel top with nominal one-foot square removable access plates, which may be drilled to accommodate conduit and cable penetrations.
   b. Provide all conduit and cable penetrations with ground bushings, hubs, gasketed locknuts, and other accessories as required to maintain the NEMA rating of the panel and electrical rating of the conduit system.

C. General Requirements

1. UL labeled control panels and cabinets.

   a. UL listing includes enclosure, specific equipment supplied with enclosure, and equipment installation and wiring within and on the enclosure. If required for UL labeling, provide ground fault protective devices, isolation transformers, fuses and other equipment necessary to achieve compliance with UL 508A requirement. The Drawings do not detail all UL 508A requirements.

2. Panel door handles with lock, or a hasp and staple for padlocking: key the locks for all control panels provided under this Contract alike.
3. Arrange devices for rear of panel mounting within the panel according to respective panel drawings and in a manner to allow for ease of maintenance and adjustment.

   a. Locate heat generating devices, such as power supplies, at or near the top of the panel.

4. Mount all components in a manner that permits servicing, adjustment, testing, and removal without disconnecting, moving, or removing any other component.

a. Mount interior panel components on removable plates (sub-panels) and not directly on the enclosure.
b. Unless shock mounting is required by the manufacturer to protect equipment from vibration, provide rigid and stable mounting.
c. Mount and orient components in accordance with manufacturer's recommendations.
d. Identify internal components with suitable plastic or metal engraved nametags mounted adjacent to (not on) each component identifying the component in accordance with the drawings and specifications.

5. Mount all panel components on a single rear-of-panel sub-panel unless the density of devices exceeds the panel mounting space permitted by the minimum panel dimensions specified. Side panel mounted components are not permitted without review and approval by Engineer.
6. Type 316 stainless-steel hardware and fasteners:

   a. Provide drilled and tapped mounting screws; self-tapping screws are not permitted.

7. Install suitable gaskets and faceplates, required to maintain NEMA rating of the panel.

D. Mounting Elevations

1. Refer to ISA Recommended Practice RP60.3 for guidance on layout and arrangement of panels and panel mount components. Account for housekeeping pad dimensions.
2. Locate centerline of indicators and controllers no lower than 48 inches or higher than 66 inches above the floor on a panel face.
3. Locate centerline of lights, selector switches, and pushbuttons no lower than 32 inches or higher than 70 inches above the floor on a panel face.
4. Locate tops of annunciators no higher than 86 inches above the floor on a panel face.
5. Install panel components in accordance with manufacturer's guidelines.

2.2 TEMPERATURE CONTROL

A. Provide force air ventilation or air conditioning units as required to prevent temperature buildup inside of panel.

B. Heat Load Calculations:

1. Submit heat load calculations for all control panels.
2. Utilize manufacturer available thermal calculators to determine heating/cooling requirements (i.e., Saginaw SCE thermal calculator, nVent Hoffman cooling selection tool, or equivalent).
3. Ensure the internal temperature of the panel is regulated between 45 to 104 degrees F under all conditions. If required to maintain the internal enclosure temperature below the maximum rating of the equipment's, provide enclosure mounted air condition equipment.
4. Account for the following conditions in the heat load calculations:
   a. Loading and dissipation effects on all surfaces of the enclosure. Account for surfaces not available for heat transfer (e.g., against a wall).
   b. Internal heat load of components (load and duty cycle). The heat calculation needs to consider the UPS on battery in their calculations.

c. For outside temperature limits, refer to Section 406100 "Process Control and Enterprise Management Systems General Provisions."

C. Sun Shields:

1. Provide custom fabricated sun shields for all outdoor panels in accordance with the following requirements:

a. Fabricate sun shields from a material suited for the area classification rating of its environment.
b. Design, fabricate, install, and support the unit to fully cover and shade the top, sides, and back of the enclosure, and to partially shade the front panel of the enclosure from direct exposure to sunlight from sunrise to sunset.
c. Depending on overall size, sun shields may be fabricated in single or multiple segments for attachment to the enclosure support framing or to separate free standing framing around the enclosure, to preserve rigidity.
d. Design and mount sun shields with a minimum 3-inch air gap around the enclosure for air circulation and heat dissipation.
e. Drilling holes or welding studs directly to the enclosure for sun shield mounting is not permitted.
f. Slope the top section of the sun shield a minimum angle of 5 degrees from horizontal.
g. Incorporate a narrow and more steeply sloped drip shield segment on the front edge of the top section to shed water away from the front of the enclosure and prevent dripping or running directly onto the front panel of the enclosure.
h. Fabricate sun shields with continuous seam welds that are ground smooth.
i. Smooth round or chamfer exposed corners, edges, and projections to prevent injury.

D. Louvers

1. If louvers are used, provide louver plate and filter kit.
2. Provide louver plates of stamped sheet metal construction.
3. Provide washable and replaceable filters.
4. Install louvers on the rear, top, or bottom of the panel, as required by the panel installation location.
5. For wall mounted enclosures with their backs directly adjacent to a wall, install louvers on the sides.

E. Forced Air Ventilation:

1. Provide forced air ventilation fans to create positive internal pressure within the panel.
2. Provide washable and replaceable filters.
3. Fan motors operate on 120-volt, 60-Hz power.

F. Air Conditioning:

1. For panels with internal heat that cannot be adequately dissipated with natural convention and heat sinks, or forced air ventilation, provide an air conditioner sized to deliver sufficient cooling.
2. NEMA rating equivalent to the NEMA rating of the panel. Maintain NEMA rating of panel when installed.
3. Provide air conditioner with conformal coating on exposed surfaces.
4. Mount air conditioners on panel side. If provided, cut sun shields to accommodate air conditioner.

G. Heating:

1. Provide an integral heater, fan, and adjustable thermostat for outdoor enclosures and enclosures located in unheated areas indoors or in areas subject to humidity and moisture, to reduce condensation and maintain the minimum internal panel temperature.

    a. Mount unit near enclosure bottom with discharge away from heat-sensitive equipment.
    b. Provide Hoffman DAH series, Stego PTC series, or equal.

2.3 ACCESSORIES

A. Nameplates

1. Identify the panel and individual devices as required, unless otherwise indicated:

    a. Include up to three lines:

2. Unless escutcheon plates are specified or unless otherwise noted on the Drawings:

    a. Furnish nameplates as 3/32-inch thick, black against white background unless otherwise noted, Lamicoid with engraved inscriptions. Bevel and smooth edges of nameplate.
    b. Nameplates with chipped or rough edges are not acceptable.

3. Mount or fasten cabinet mounted nameplates with epoxy adhesive or stainless-steel screws.
4. Provide a panel nameplate with a minimum of 1-inch high letters for every panel.
5. Provide legend plates or 1-inch by 3-inch engraved nameplates with 1/4-inch lettering for identification of door mounted control devices, pilot lights, and meters.
6. Use single Lamicoid nameplates with multiple legends for grouping of devices such as selector switches and pilot lights that relate to one function.

B. Print Storage Pockets

1. Provide print storage pockets of steel construction, welded onto the door of the enclosure.
2. Size storage pockets to accommodate all prints required to service the equipment, and to accommodate 8.5-inch by 11-inch documents without folding.

C. Corrosion Control

1. Protect panels from internal corrosion by use of corrosion-inhibiting vapor capsules. Size and quantity as necessary per manufacturer recommendations.
2. Manufacturer:

   a. Zerust VC.
   b. Hoffman Model AHCI.
   c. Or equal.

2.4 PILOT TYPE INDICATING LIGHTS

A. Manufacturers:

1. Manufacturers and their products are subject to compliance with requirements. Provide one of the following:

   a. Cutler-Hammer.
   b. Allen Bradley.
   c. General Electric.
   d. Square D.
   e. Crouse Hinds (NEMA 7).
   f. Or approved equal.

B. Type: Energy efficient Solid State LED Lamps.

C. Functional:

1. Provide units with low voltage LED lamps suitable for the voltage supplied.
2. Provide lights supplied with 120V AC power with integral reduced voltage transformers.
3. Provide lamps replaceable from the front of the unit.

D. Physical:

1. Lens color:

   a. Running, on, open - Red.
   b. Stopped, off, closed - Green.
   c. Alarm - Amber.
   d. White - Power on.
   e. Blue - All other status indications not covered by the above.
   f. Lens caps shall be approximately 0.46-inch diameter. Provide legend faceplates engraved to indicate the required function of each device; NEMA rating - 4X.

2.5 SELECTOR SWITCHES AND PUSHBUTTONS

A. Manufacturers:

1. Manufacturers and their products are subject to compliance with requirements. Provide one of the following:

a. Allen Bradley.
b. Crouse Hinds (NEMA 7).
c. Cutler-Hammer.
d. General Electric.
e. Square D.
f. Or approved equal.

B. Type:

1. Control devices shall be heavy-duty oil tight type with stackable contact blocks.

C. Functional:

1. Provide contact arrangement and switching action as required for the control system specified.

D. Physical:

1. For 120 VAC service provide contacts rated 10 amps at 120 VAC, for 24 VDC service provide silver sliding contacts rated 5 amps at 125 VDC, for electronic (millivolt/ milliamp) switching provide contacts rated lamp at 28 VDC.
2. Pushbuttons: Flush type operators.
3. Selector Switches: Knob or wing lever operators; NEMA rating - 4X; Provide legend plates denoting switch/pushbutton position/ function.

2.6 GENERAL PURPOSE RELAYS AND TIME DELAYS

A. Manufacturers:

1. Manufacturers and their products are subject to compliance with requirements. Provide one of the following:

a. Allen Bradley.
b. IDEC.
c. Omron.
d. Schneider Electric.
e. Or approved equal.

B. Type:

1. General purpose plug-in type.

C. Functional:

1. Contact Arrangement/Function: As required to meet the specified control function; with mechanical life expectancy in excess of 10 million.
2. Duty Cycle: Rated for continuous operation; Units shall be provided with integral indicating light to indicate if relay is energized.
3. Solid State Time Delays: Provide with polarity protection (DC units) and transient protection.

4. Time Delay Units: Adjustable and available in ranges from 0.1 second to 4.5 hours.

D. Physical:

1. For 120 VAC service provide contacts rated 10 amps at 120 VAC, for 24 VDC service provide contacts rated 5 amps at 28 VDC, for electronic (milliamp/millivolt) switching applicator provide gold plated contacts rated for electronic service; relays shall be provided with dust and moisture resistant covers.

2. Provide relays with number of poles required to meet the design intent.

E. Options/Accessories Required:

1. Provide blade terminal din rail mounting sockets with pressure type terminal blocks rated 300 volt and 10 amps.
2. Provide mounting rails/holders as required.
3. Provide LED/neon lamp indicator and manual check button.

2.7 SIGNAL RELAY SWITCHES (CURRENT TRIPS)

A. Manufacturers:

1. Manufacturers and their products are subject to compliance with requirements. Provide one of the following:
   a. Acromag.
   b. Action Instruments Slim Pak.
   c. Or equal

B. Type:

1. Solid state, ASIC technology, electronic type.

C. Functional:

1. Input: 4-20 mA.
2. Output: Isolated contact output, double pole double throw (DPDT), rated 5 amps at 120 VAC.
3. Accuracy: 0.1 percent.
4. Protection: Provide RFI protection.
5. Deadband: Adjustable between 0.1 and 5.0 percent of span.
6. Set point Adjustment: Single Point alarms shall be adjustable to trip on rising or falling input signal, dual point alarms shall be adjustable to trip on rising and falling input signals.
7. Repeatability: Trip point repeatability shall be at least 0.1 percent of span.

D. Physical:

1. Mounting: DIN rail.

2.8 SIGNAL ISOLATORS/BOOSTERS/CONVERTERS

A. Type:

1. Solid state, ASIC technology; electronic type.

B. Functional:

1. Accuracy: 0.15 percent.
2. Inputs: Current, voltage, frequency, temperature, or resistance as required.
3. Outputs: Current or voltage as required.
4. Isolation: There shall be complete isolation between input circuitry, output circuitry, and the power supply.
5. Adjustments: Provide zero and span adjustment.
6. Protection: Provide RFI protection.

C. Physical:

1. Mounting: DIN Rail.

D. Manufacturer(s):

1. Action Instruments Slim Pak.
2. Acromag.
3. Or approved equal.

2.9 INTRINSIC SAFETY BARRIERS

A. Manufacturers:

1. Manufacturers and their products are subject to compliance with requirements. Provide one of the following:

   a. Gems – 54800 (4-20mA) and 65800 (dry contacts).
   b. R. Stahl - Intrinspak
   c. Siemens Water Technologies – IS1 (4-20mA) and IS6 (dry contacts).
   d. Or equal

B. Type:

1. Barriers shall be of the solid state electronic type in which the energy level of the sensing or actuation circuit is low enough to allow safe usage in hazardous areas.
2. Provide a barrier for instrumentation and equipment transmitting analog or digital signals that originate in a hazardous area as indicated in the design documents.

C. Options Required:

1. Barriers shall match power supply provided.
2. Barriers shall be located in non-hazardous areas.

2.10 INTRINSIC SAFETY BARRIERS (FOR 2-WIRE TRANSMITTER SYSTEMS)

A. Manufacturers:

1. Manufacturers and their products are subject to compliance with requirements. Provide one of the following:
   a. Gems.
   b. P&F.
   c. Unitech.
   d. Or approved equal.

B. Provide passive devices requiring no external voltage supply and supplied with series resistors, series fuse and shunt zener diodes to limit the transfer of energy to levels required by intrinsically safe protection between safe and hazardous locations.

C. Provide Factory Mutual approved and certified units for use in accordance with National Fire Protection Association (NFPA 493).

2.11 SURGE PROTECTION FOR CONTROL SYSTEMS

A. Manufacturers:

1. Manufacturers and their products are subject to compliance with requirements. Provide one of the following:

   a. Citel DLA series.
   b. MJ8 series.
   c. MTL Surge Technologies (Telematic) NP Series.
   d. Phoenix Contact PlugTrab Series.
   e. Transtector FSP Series.
   f. Or approved equal.

B. Function/Performance:

1. Provides surge protection of electronic instrumentation from induced surges propagated along the signal and power supply lines from lightning, utility, or the plan electrical systems.
2. Protection system lower than the instrument withstand level, while not interfering with normal operation.
3. Maintenance free and self-restoring.
4. Response time: Less than 50 nanoseconds.
5. Discharge surge current: At least 8kA (at an 8x20µs impulse waveform)

C. Required Surge Protection:

1. Control Panel Power Feed (120VAC)

a. Provide protection of 120VAC power feed into control panels, server racks, network racks, and communication enclosures.
b. Nominal Discharge surge current: 20kA (at an 8x20µs impulse waveform) when nominal Current is 20A and accepts 12-24 AWG wire connection
c. Provide surge protector from one of the following:
   1) Citel DS40 series
   2) MCG Surge Protection PT Series (for Control Panels)/ 400 series (For Equipment)
   3) Phoenix Contact "PLT/PT" or VAL-US series
   4) Transtector AC SPD I2R Series
   5) Substitutions: Or equal.

2. 4-Wire Field Instrument Power:
   a. Provide surge protection at the field device to protect 120 VAC power and 24 VDC power to analog instrument.
   b. Mount transmitter surge protectors in separate NEMA 4X enclosure for field installations.
   c. Nominal Discharge surge current: 2.5kA (at an 8x20µs impulse waveform).
   d. Provide Field Mounted (at instrument) surge protector from one of the following:
      1) Phoenix Contact BoxTrab BXT-N4X Series
      2) MTL Surge Technologies SDyyX series
      3) Substitutions: Or equal.

3. Analog Signal (4-20mA) Circuits:

   a. Provide surge protection where any part of the circuit is outside of the building envelope.
   b. Mount transmitter surge protectors in separate NEMA 4X enclosure or conduit mount for field installations.
   c. Protect circuits at both the transmitter side and the PLC panel side of the circuit.
   d. Nominal Discharge surge current: 10kA (at an 8x20µs impulse waveform).
      Provide Field Mounted (at instrument) surge protector from one of the following:
      1) Phoenix Contact SurgeTrab S-PT Series
      2) MTL Surge TechnologiesTP48
      3) Citel TSP M series.
      4) Substitutions: Or equal.

   e. Provide panel mounted surge protector for Field Mounted Instruments from one of the following:
      1) Phoenix Contact TermiTrab TTC Series
      2) MTL Surge Technologies SD series
      3) Citel DLA series. DLC series
      4) Substitutions: Or equal.

4. Inductive Loads:
   a. Provide coil surge suppression devices, such as varistors or interposing relays, on all process controller outputs or switches rated 120VAC or less that drive solenoid, coil, or motor loads.
   b. Nominal Discharge surge current: 20kA (at an 8x20µs impulse waveform)
   c. Provide surge protector from one of the following:
      1) Citel DS240S series

2) Phoenix Contact PT series
3) Substitutions: Or equal

5. Non-Fiber Based Data Highway or Communications Circuits:

a. Provide protection on all communication and data highway circuits that leave a building or are routed external to a building.
b. Provide circuit protection at both ends of the line.
c. Nominal Discharge surge current: 2kA (at an 8x20µs impulse waveform)
d. Provide surge protector from one of the following based on specific application:
1) Phoenix Contact DATA Trab or PlugTrab PT Series,
2) Transtector FSP Series, CPX series
3) MTL Surge Technologies ZoneBarrier NC Series,
4) Citel DLA series, MSP Series
5) Substitutions: Or equal.

6. Ethernet Connection:

a. Provide protection on all communication and data highway circuits that leave a building or are routed external to a building.
b. Mount surge protectors in enclosures for field installations.
c. Provide circuit protection at both ends of the line.
d. Nominal Discharge surge current: 2kA (at an 8x20µs impulse waveform)
e. Provide surge protector from one of the following based on specific application:
1) Phoenix Contact DATA Trab Series,
2) Transtector FSP Series, CPX series
3) MTL Surge Technologies ZoneBarrier NC Series,
4) Citel DLA series, MJ8 Series
5) Substitutions: Or equal

7. Serial Connection (RS-485/RS-232):

a. Provide surge protection on RS-485 connection. Connection method to device by 9-position D-SUB connector
b. Mount surge protectors in separate NEMA 4X enclosure for field installations.
c. Provide circuit protection at both ends of the line.
d. Nominal Discharge surge current: 5kA (at an 8x20µs impulse waveform)
e. Provide surge protector from one of the following based on specific application:
1) Phoenix Contact DATA Trab Series, DT-UFB-485/BS
2) Transtector FSP Series,
3) MTL Surge Technologies Zone Barrier Series,
4) Citel Data Line, DD series
5) Substitutions: Or equal

8. RF Coaxial Cable:

a. Provide protection on communication cables between radios and antennas, mounted either inside the panel, or in the wall of the enclosure.
b. Protected in accordance with NEMA and UL 497E standards.
c. Nominal Discharge surge current: 5kA (at an 8x20µs impulse waveform)
d. Provide surge protector from one of the following:

1) Citel P8AX series
2) Polyphaser GT Series
3) Phoenix Contact Coax Trab series
4) Substitutions: Or equal.

9. Telephone Circuits:
   a. Provide Telephone Company approved line protection units for all telephone lines used for telemetry or SCADA system use under this Contract.
   b. Nominal Discharge surge current: 10kA (at an 8x20µs impulse waveform)
   c. Provide surge protector from one of the following:
      1) Citel MJ8-Telecom or DLA series
      2) Phoenix Contact Data Trab Series or PT-IQ Series
      3) Substitutions: Or equal.

2.12 24 VDC POWER SUPPLIES

A. Manufacturers:

1. Manufacturers and their products are subject to compliance with requirements. Provide one of the following:

   a. Allen-Bradley.
   b. Phoenix Contact.
   c. SOLA HD.
   d. Or approved equal.

B. Provide a 24 VDC power supply in the control panel to power field instruments, panel devices, etc., as required. Equip the power supply with a power on/off circuit breaker.

C. Provide redundant power supplies that operate in parallel with an independent redundancy module to power field instruments and panel devices as indicated on Drawings.

D. The 24 VDC power supply shall meet the following requirements:

1. Input power: 115 VAC, plus or minus 10 percent, 60 Hz.
2. Output voltage: 24 VDC.
3. Output voltage adjustment: 5 percent.
4. Line regulation: 0.05 percent for 10-volt line change.
5. Load regulation: 0.15 percent no load to full load.
6. Ripple: 3 mV RMS.
7. Operating temperature: 32 to 140 degrees Fahrenheit.

E. Size the 24 VDC power supply to accommodate the design load plus a minimum 25 percent spare capacity.

F. If power supply on/off status signal is indicated on drawings, provide a relay contact (internal to the power supply, or external if the power supply is not so equipped) to indicate on/off status of the power supply.

G. Provide output overvoltage and overcurrent protective devices with the power supply to protect instruments from damage due to power supply failure and to protect the power supply from damage due to external failure.

H. Mount the 24 VDC power supply such that dissipated heat does not adversely affect other panel components.

2.13 INTRUSION SWITCH

A. Manufacturer(s)

1. GE Security Industrial Sentrol 2500 Series.
2. Honeywell.
3. Bosch.
4. Or approved equal.

B. Provide intrusion switches and install at the pedestrian and overhead doors inside the new Elevated Storage Tanks as indicated in Drawings.

C. The intrusion switches shall be designed for the specific door type for which it will be used and shall be compatible with the environment in which it will be used.

D. The intrusion switch shall be able to connect to the PLC for remote monitoring purposes.

E. Type

1. Monitored door shall be provided with DPDT magnetic door switch for personnel access door and SPDT for Overhead access door.
2. Magnetic contact.
3. Hermetically sealed reed switch.

F. Physical

1. Contact and magnets shall be in brushed anodized aluminum tube housing.
2. Contact shall be furnished with attached stainless steel armored cable.
3. Configuration shall be normally open.
4. Switch housing shall be aluminum or stainless steel.
5. Power: 12-24 VDC.

G. Options/Accessories Required

1. All mounting brackets shall be furnished with switch.
2. Electrical junction boxes, terminal strips, wiring and conduit shall be provided as shown on the Drawings.

2.14 INDUSTRIAL THERMOSTAT

A. Manufacturers:

1. Manufacturers and their products are subject to compliance with requirements. Provide one of the following or equal:
   a. PECO Controls TH109.
   b. Dayton 6EDY5
   c. Johnson Controls A19PRC.
   d. Or approved equal.

B. Type:

1. Line voltage mechanical thermostat.
2. Fluid filled coil sensor.

C. Function/Performance:

1. Range: 40 to 100 degrees F.
2. Sensitivity: Plus or minus 3 degrees F.
3. Set Point: Field adjustable and set between 20 and 80 percent of the adjustable range.
4. Deadband: Fixed deadband.
5. Reset: Automatic reset type.
6. Switch Rating: 25 amps at 240VAC.

D. Physical:

1. Input Voltage: 24 to 277VAC.
2. Mounting: Wall-mounted, flat surface.
3. NEMA 4X (IP66) for non-hazardous locations. Where indicated on Drawings to be mounted in hazardous locations, provide explosion proof switch housing, approved for Class I, Division 1, Groups C and D.
4. Switching Arrangement: Single pole double throw (SPDT) unless double pole double throw (DPDT) switches are indicated on the instrument device schedule.

E. Required Accessories:

1. Provide all mounting hardware required for manufacturer recommended installation.

2.15 GENERAL FINISH REQUIREMENTS

A. Descale, degrease, fill, grind and finish sections.

B. Finish steel-fabricated enclosures with two rust resistant phosphate prime coats and two coats of enamel, polyurethane, or lacquer finish which are applied by either hot air spray or conventional cold spray methods.

1. Brushed anodized aluminum, stainless steel, and FRP panels do not require a paint finish.

C. Grind smooth, sandblast and then clean with solvent. Fill surface voids and grind smooth.

D. Immediately after cleaning, apply one coat of a rust-inhibiting primer inside and outside, followed by an exterior intermediate and topcoat of a two-component type epoxy enamel.

1. Apply final sanding to the intermediate exterior coat before top coating.

E. Apply a minimum of two coats of manufacturer's standard, flat light-colored lacquer, on the panel interior after priming.

F. Unless otherwise noted, finish exterior colors as ANSI 61 gray with textured finish.

G. Finish products after assembly.

PART 3 - EXECUTION

3.1 INDUSTRIAL ENCLOSURE SCHEDULE

A. Provide the following industrial enclosures:

Table 1.
Industrial Enclosure Schedule

Panel Designation	Maximum Space Available	Enclosure Rating and Type
Cedar Breaks RTU enclosure located at Cedar Break Pump Station	60-inch high by 48-inch wide by 18-inch deep	NEMA Type 4X, two-door, stainless steel construction, Freestanding. Front access only.
DB Wood RTU enclosure located at DB Wood Pump Station	60-inch high by 48-inch wide by 18-inch deep	NEMA Type 12, two-door, stainless steel construction, Freestanding. Front access only.
Level Relay Panel LRP-100 located at Cedar Break Pump station	24-inch-high by 24-inch-wide by 10-inch-deep	NEMA Type 4X, single-door, stainless steel construction, Unistrut Mounted Panel. Front Access Only.
Level Relay Panel LRP-200 located at DB Wood Pump station	24-inch-high by 24-inch-wide by 10-inch-deep	NEMA Type 4X, single-door, stainless steel construction, Unistrut Mounted Panel. Front Access Only.

3.2 EXAMINATION

A. Examine walls, floors, roofs, and rooms for suitable conditions where industrial enclosures will be installed.

B. Prepare written report, endorsed by Installer, listing conditions detrimental to performance.

C. Proceed with installation only after unsatisfactory conditions have been corrected.

3.3 INSTALLATION

A. Comply with NECA 1.

B. Wiring Method: Install cables in raceways and cable trays except within consoles, cabinets, desks, and counters. Conceal raceway and cables except in unfinished spaces.

1. Install plenum cable in environmental air spaces, including plenum ceilings.
2. Comply with requirements for raceways and boxes specified in Section 260533 "Raceways and Boxes for Electrical Systems."

C. Wiring Method: Conceal conductors and cables in accessible ceilings, walls, and floors where possible.

D. Wiring within Enclosures: Bundle, lace, and train conductors to terminal points with no excess and without exceeding manufacturer's limitations on bending radii. Install lacing bars and distribution spools.

3.4 ADJUSTING

A. Adjust hardware and moving parts to function smoothly and lubricate as recommended by manufacturer.

3.5 IDENTIFICATION

A. Refer to drawings for tagging designations.

3.6 FIELD QUALITY CONTROL

A. Perform the tests and inspections in accordance with the following:

1. Section 406100 “Process Control and General Provisions”.
2. Section 406121.20 “Process Control System Testing”.

B. Industrial enclosure accessories/devices will be considered defective if it does not pass tests and inspections.

C. Prepare test and inspection reports in accordance with the following:

1. Section 406100 “Process Control and General Provisions”.
2. Section 406121.20 “Process Control System Testing”.

3.7 STARTUP SERVICE

A. Perform startup service.

1. Complete installation and startup checks’ according to manufacturer's written instructions.

END OF SECTION 406717

© 2023 CDM Smith
All Rights Reserved

SECTION 406733 - PANEL WIRING

PART 1 - GENERAL

1.1 RELATED DOCUMENTS

A. Drawings and general provisions of the Contract, including General and Supplementary Conditions and Division 01 Specification Sections, apply to this Section.

1.2 SUMMARY

A. Section includes requirements for internal wiring of control panels and consoles.

B. Related Requirements:

1. Section 406100 "Process Control and Enterprise Management Systems General Provisions" for submittal requirements.
2. Section 406717 "Industrial Enclosures."
3. Section 406763 "Control Panel Mounted UPS."

1.3 DEFINITIONS

A. American Wire Gage (AWG): Measurement of the cross-sectional area of a conductor.

B. Input/Output (I/O): Analog or digital field instrument signals to be received and interpreted by a PLC.

C. Programmable Logic Controller (PLC): A ruggedized programmable computer used for industrial automation.

D. Process Control System Supplier (PCSS): The entity responsible for providing all materials, equipment, labor, and services required to achieve a fully integrated and operational control system.

1.4 ACTION SUBMITTALS

A. Product Data: For each type of product.

1.5 INFORMATIONAL SUBMITTALS

A. Refer to Section 406100 "Process Control and Enterprise Management Systems General Provisions."

B. Product Test Reports: For each Panel Wiring, for tests performed by manufacturer and witnessed by a qualified testing agency.

C. Evaluation Reports: For Panel Wiring.

1.6 CLOSEOUT SUBMITTALS

A. Refer to Section 406100 “Process Control and Enterprise Management System General Provisions.”

1.7 MAINTENANCE MATERIAL SUBMITTALS

A. None Required

1.8 QUALITY ASSURANCE

A. Perform work in accordance with UL 508.

B. Provide components compatible with functions required to form complete working system.

C. Provide UL 508 label on complete assembly.

D. Maintain copies of panel drawings on site.

1.9 DELIVERY, STORAGE, AND HANDLING

A. Refer to Section 016000 “Product Requirements” for delivery, storage, and handling requirements.

1.10 FIELD CONDITIONS

A. Refer to Section 406100 “Process Control and Enterprise Management Systems General Provisions.”

1.11 WARRANTY

A. Refer to Section 406100 “Process Control and Enterprise Management Systems General Provisions.”

PART 2 - PRODUCTS

2.1 CONTROL PANEL - INTERNAL CONSTRUCTION

A. Internal Electrical Wiring:

1. Provide stranded, type MTW interconnecting wiring:

a. Use 600-volt insulation rated for not less than 190 degrees Fahrenheit.
b. Segregate wiring for systems operating at voltages in excess of 120 VAC from other panel wiring.

    1) Locate either in a separate section of a multi-section panel or behind a removable Plexiglas or similar dielectric barrier.

c. Develop panel layout such that technicians have complete access to 120 VAC and lower voltage wiring systems without direct exposure to higher voltages.

2. For power distribution wiring on the line side of fuses or breakers:

    a. Use 12 AWG minimum.
    b. For control wiring on the secondary side of fuses:

        1) Use 16 AWG minimum.
        2) Utilize 18 AWG shielded, twisted pair cable insulated for not less than 600 volts for electronic analog circuits.

3. Cover power distribution blocks with protective guards to meet "finger-safe" requirements of IP20.
4. Route power and low voltage DC wiring systems in separate wireways.

    a. Cross different system wires at right angles.
    b. Separate different system wires routed parallel to each other by at least 6-inches.
    c. Terminate different wiring systems on separate terminal blocks.
    d. Do not fill wiring troughs to more than 60 percent visible fill.
    e. Identify the wireway with DC nameplate. Do the same for the other voltage classes.

5. Terminations:

    a. Terminate wiring onto single tier terminal blocks:

        1) Uniquely and sequentially number each terminal block.
        2) Direct wiring between field equipment and panel components is not acceptable.
        3) Multi-level terminal blocks or strips are not acceptable.

    b. Arrange terminal blocks in vertical rows and separated into groups (power, AC control, DC signal).

        1) Provide each group of terminal blocks with a minimum of 25 percent spares.

    c. Use compression type, fused, unfused, or switched terminal blocks.

        1) Use two terminals per point for discrete inputs and outputs (DI and DO) with adjacent terminal assignments.
        2) Wire all active and spare PLC and controller points to terminal blocks.

d. Use three terminals per point for analog inputs and outputs (AI and AO) per shielded pair connection with adjacent terminal assignments for each point.

1) The third terminal is for shielded ground connection for cable pairs.

a) Ground the shielded signal cable at the PLC cabinet.
b) Wire all active and spare PLC and controller points to terminal blocks.

e. Use sleeve-type wire and tube markers with heat impressed letters and numbers.
f. Use only one side of a terminal block row for internal wiring.

1) Field wiring side of the terminal not to be within 6-inches of the side panel or adjacent terminal or within 8-inches of the bottom of free-standing panels, or within 3-inches of stanchion mounted panels, or 3-inches of adjacent wireway.

g. Isolate circuit power from the SCADA cabinet to field devices (switches, dry contacts etc.) that are used as discrete inputs to the PLC input cards with an isolating switch terminal block with flip cover that is supplied with a dummy fuse.

1) Use Allen Bradley Model 1492-H7 or equal.
2) One isolating switch terminal block per loop numbered piece of equipment and one per spare I/O point is acceptable.

h. Isolate all PLC discrete outputs to the field with an isolating fuse switch terminal block with a flip cover and a neon blown fuse indicator.

1) Use Allen Bradley 1492-H4 or equal.

6. Clearly identify wiring to hand switches and other devices, which are live circuits independent of the panel's normal circuit breaker protection as such.
7. Clearly tag and color code wiring.

a. Tag numbers and color coding to correspond to panel wiring diagrams and loop drawings prepared by the PCSS.
b. Power wiring, control wiring, grounding, and DC wiring to utilize different color insulation for each wiring system used.
c. Color coding scheme to be in accordance with UL 508a.

8. Provide surge protectors on all incoming power supply lines at each panel per requirements of Section 406717 “Industrial Enclosures.”
9. Each field instrument furnished under Division 40 and indicated on the Drawings as deriving input power from the control panel(s) to have a separate power distribution circuit with a circuit breaker or fuse and blown fuse indication.

a. Power instruments requiring 120VAC power as indicated on the drawings.

10. Wiring trough for supporting internal wiring:

a. Plastic type with snap-on covers.

b. Side walls to be open top type to permit wire changing without disconnecting.
c. Trough to be supported to the subpanel by stainless steel screws.
d. Do not bond trough to the panel with glue or adhesives.

11. Provide each panel with a single tube, LED light fixture, 20 Watt in size (minimum)

    a. Mounted internally to the ceiling of the panel.
    b. Light fixture to be switched and be complete with the lamp.

12. Each panel to have a specification grade duplex convenience receptacle with ground fault interrupter:

    a. Mount internally within a stamped steel device box with appropriate cover.
    b. Convenience receptacle is not be powered from a UPS
    c. Protect by a dedicated fuse or circuit breaker.

13. Each panel to be provided with an isolated copper grounding bus for all signal and shield ground connections.

    a. Shield grounding to be in accordance with the instrumentation manufacturer's recommendations.

14. Provide each panel with a separate copper power grounding bus (safety) in accordance with the requirements of the National Electrical Code.
15. Each panel to have control, signal, and communication line surge suppression in accordance with Section 407856 “Isolators, Intrinsic Safety Barriers, and Surge Suppressors.”
16. Microprocessor-based electronic devices in the panel that are powered by 120VAC to be powered by the UPS.
17. Provide each panel with a circuit breaker to interrupt incoming power.
18. Additional electrical components including transformers, motor starters, switches, circuit breakers, etc. to be in compliance with the requirements of Division 26.

B. Relays not provided under Division 26 and required for properly completing the control function specified in Division 40, Division 26 or as indicated on the Drawings to be provided under this Section.

C. Orientation of devices including PLC and I/O when installed to be per the manufacturer's recommendations.

    1. No vertical orientation of PLC racks are allowed unless specifically indicated by the manufacturer as an acceptable mounting alternative and also approved by the Engineer.

PART 3 - EXECUTION

3.1 INSTALLATION

A. Comply with NECA 1.

B. Wiring Method: Conceal conductors and cables in accessible ceilings, walls, and floors where possible.

C. Wiring within Enclosures: Bundle, lace, and train conductors to terminal points with no excess and without exceeding manufacturer's limitations on bending radii.

3.2 CONNECTIONS

A. Refer to Section 260526 “Grounding and Bonding for Electrical Systems.”

END OF SECTION 406733

© 2023 CDM Smith
All Rights Reserved

SECTION 406763 - CONTROL PANEL MOUNTED UPS

PART 1 - GENERAL

1.1 RELATED DOCUMENTS

A. Drawings and general provisions of the Contract, including General and Supplementary Conditions and Division 01 Specification Sections, apply to this Section.

1.2 SUMMARY

A. Section includes control panel mounted uninterruptible power supplies (UPS).

B. Related Requirements:

1. Section 406100 “Process Control and Enterprise Management Systems General Provisions” for submittal requirements.
2. Section 406717 “Industrial Enclosures.”
3. Section 406121.20 “Process Control System Testing.”

1.3 DEFINITIONS

A. Uninterruptible Power Supply (UPS): A device capable of providing emergency battery power when the main power source fails.

1.4 ACTION SUBMITTALS

A. Product Data: For each type of product.

1. Refer to Section 406100 “Process Control and Enterprise Management System General Provisions.”

B. Shop Drawings:

1. Refer to Section 406100 “Process Control and Enterprise Management Systems General Provisions.”
2. Provide UPS runtime and load calculation confirming UPS can handle the full operating load plus safety margin to meet the runtime performance requirements.

1.5 INFORMATIONAL SUBMITTALS

A. Refer to Section 406100 “Process Control and Enterprise Management Systems General Provisions.”

1.6 CLOSEOUT SUBMITTALS

A. Refer to Section 406100 "Process Control and Enterprise Management System General Provisions."

1.7 MAINTENANCE MATERIAL SUBMITTALS

A. None Required.

1.8 QUALITY ASSURANCE

A. Provide components compatible with functions required to form complete working system.

1.9 TECHNOLOGY OBSOLESCENCE MITIGATION

A. Not applicable to this Section.

1.10 FIELD CONDITIONS

A. Refer to Section 406100 "Process Control and Enterprise Management Systems General Provisions."

1.11 WARRANTY

A. Refer to Section 406100 "Process Control and Enterprise Management Systems General Provisions."

PART 2 - PRODUCTS

2.1 SINGLE PHASE UPS - INTERNAL TO CONTROL PANELS

A. Manufacturers

1. Manufacturers and their products are subject to compliance with requirements. Provide one of the following:

a. APC UPS.
b. Eaton UPS
c. Allen Bradley 1609-D UPS.
d. Sola Hevi Duty SDU UPS.
e. Or approved equal.

B. System Description:

1. Provide an industrially rated continuous-duty, on-line, solid state, line interactive, single-phase uninterruptible power system.
2. UPS to provide power conditioning and power backup for PLC, communications hardware, and other critical electronic loads as indicated on Drawings.
3. UPS system consists of the following major components:

    a. Rectifier and battery charger.
    b. Inverter.
    c. Batteries.
    d. Other features as described in this Section and as indicated on Drawings.

C. General Requirements:

1. Provide battery protection via an internal circuit breaker disconnect.
2. Current limiting circuitry to protect inverter output under any load condition.
3. AC output neutral be electrically isolated from UPS chassis.

    a. UPS chassis to have an equipment ground terminal.
    b. Provide provisions for installation of a bonding connector.

4. Suitable for installation in a UL508A listed panel.
5. DIN rail mountable.
6. UL recognized components for industrial applications in accordance with UL508 without derating.

D. Performance Requirements:

1. Ratings:

    a. Output power: Suitable to meet at minimum 130% of full calculated load.
    b. Battery runtime: The UPS must support calculated full load for 30 minutes, minimum.

        1) Add external batteries where required to meet the runtime performance requirements

2. Environment:

    a. Ambient temperature: 0 to 122 degrees Fahrenheit.
    b. Elevation: Up to 500-ft above mean sea level.
    c. Relative humidity: 1 to 95 percent non-condensing.

3. System Input - Primary source:

    a. Nominal Input Voltage: 120 VAC.
    b. Frequency: 45 to 65 Hz.
    c. Input Power Factor: 0.95 lag minimum, 50 to 100 percent load.
    d. Input Surge Withstandability: Per IEEE 587/ANSI C62.41. Category A and B, (6 kV).

4. System Output:

a. Nominal Output Voltage: 120 VAC.
b. Frequency: 60 Hertz plus or minus 3 Hertz.
c. 100 percent load with 3:1 Crest Ratio
d. Frequency Slew Rate: 1 Hz/second. (Adjustable at startup)

5. AC to AC Efficiency (100 percent load @ rated PF): 88 percent online, 86 percent on battery.
6. Acoustical Noise:

   a. Noise generated by UPS under normal operation not exceed 65 dBA (60 dBA typical) at one meter from any surface, measured at 25 degrees C (77 degrees F) and full load.

7. EMI Suppression:

   a. UPS to meet FCC Rules and Regulation 47, Part 15, Subpart J, for Class A devices.

E. Modes of Operation:

1. UPS to operate as a line interactive on-line, fully automatic system in the following modes:

   a. Normal:

      1) Critical load continuously supplied with filtered and regulated AC power by inverter. Rectifier/battery chargers derive power from preferred AC source and supply DC power to inverter while simultaneously floats charge the batteries.

   b. Emergency:

      1) Upon failure of preferred AC power source, critical load continues to be supplied by inverter. Inverter power supplied without switching from storage battery. No interruption to critical load upon failure or restoration of preferred ac sources. If AC source cannot be restored before battery discharges to its low voltage dropout value, UPS automatically shuts itself down in an orderly manner.

   c. Recharge:

      1) Upon restoration of AC source, rectifier/battery charger to power inverter and simultaneously recharge batteries. This to be an automatic function causing no interruption to critical load.

F. Rectifier/Charger:

1. Solid-state equipment and controls necessary to convert incoming AC power to regulated DC power for input to inverter and for battery charging.
2. Solid-state SCR/IGBT power transistor type with constant voltage/current limiting control circuitry.

G. Inverter:

1. Include all solid-state equipment and controls to convert DC power from rectifier/charger or battery to a regulated AC power for powering critical load.

    a. Use Insulated Gate Bipolar Transistors (IGBTs) in a phase-controlled, pulse width modulated (PWM) design capable of providing the specified AC output.

2. Capable of supplying current and voltage for overloads exceeding 100 percent.

    a. Provide 150 percent of full load for 30 seconds and 125 percent of full load for 2 minutes.
    b. Status indicator and audible alarm indicate overload operation.

3. Maintain output voltage to within plus or minus 5 percent.
4. Output voltage total harmonic distortion (THD) not greater than 5 percent at full load.

H. Batteries:

1. High Temperature sealed, maintenance-free, high-rate discharge, lead-acid cells suitable for use indoors with no off gassing, or water addition requirements.

    a. Require no special ventilation.
    b. One or more battery banks with number of cells required to meet requirements of rest of these specifications.

2. Battery Design Life: 2 to 4 years

I. External Maintenance Bypass:

1. Provide each UPS with a "two-position" external bypass switch system to permit UPS to be removed for repair or maintenance without causing power disruption to connected power loads.

    a. External Bypass Switch: Snap-action type with switching speed approximately 10ms or less independent of operator action.
    b. Label the two positions UPS and UTILITY.

J. Controls and Monitoring:

1. Microprocessor-controlled circuitry:

    a. Provide fully automatic operation of UPS through use of a microprocessor-based controller.
    b. Operating and protection parameters firmware-controlled.
    c. Logic includes system test capability to facilitate maintenance and troubleshooting.
    d. Startup, battery charging, and transfers to be automatic.

2. Front Indicators: As a minimum, the following indicators to be provided on UPS control panel:

    a. On-line (UPS is using utility power to power the load).

1) In bypass mode.
2) On battery.
3) Overload.
4) Replace battery / battery disconnected.
5) Fault.
6) Bar graph for utility voltage.
7) Bar graph for battery.

b. Front Panel UPS Controls:

1) Power On/Off.
2) Self-test.
3) Alarm silence.
4) Cold start.
5) Load off.

c. Remote alarm and status indication: Isolated SPDT dry contacts provided to indicate UPS status for remote monitoring. Contacts rated for 250VAC @ 5A or 30VDC @ 5A

1) Individual contacts provide for separate annunciation of the following alarm and status conditions:
   a) On Battery Power – Defined as TRUE when the UPS is in Emergency Operation as defined in "2.1SINGLE PHASE UPS - INTERNAL TO CONTROL PAN
   b) Low Battery Warning – Defined as TRUE when the UPS detects a Low Battery. This is an independent signal from UPS Fault.
   c) UPS Fault – Defined as TRUE when the UPS detects an internal failure that prohibits the proper operation. This is an independent signal from Battery Status.

PART 3 - EXECUTION

3.1 EXAMINATION

A. Examine walls, floors, roofs, and rooms for suitable conditions where UPS will be installed.

B. Prepare written report, endorsed by Installer, listing conditions detrimental to performance.

C. Proceed with installation only after unsatisfactory conditions have been corrected.

3.2 INSTALLATION

A. Comply with NECA 1.

B. Wiring Method:

1. Conceal conductors and cables in accessible ceilings, walls, and floors where possible.

C. Wiring within Enclosures:

1. Bundle, lace, and train conductors to terminal points with no excess and without exceeding manufacturer's limitations on bending radii.

3.3 CONNECTIONS

A. Refer to Section 260526 “Grounding and Bonding for Electrical Systems.”

3.4 IDENTIFICATION

A. Refer to drawings for tagging designations.

3.5 FIELD QUALITY CONTROL

A. Perform the following tests and inspections in accordance with the following:

1. Section 406100 “Process Control and Enterprise Management Systems General Provisions”.

2. Section 406121.20 “Process Control System Testing”.

B. Uninterruptible power supplies will be considered defective if it does not pass tests and inspections.

C. Prepare test and inspection reports in accordance with the following:

1. Section 406100 “Process Control and Enterprise Management Systems General Provisions.”

2. Section 406121.20 Process Control System Testing.

3.6 STARTUP SERVICE

A. Perform startup service.

1. Complete installation and startup checks’ according to manufacturer's written instructions.

3.7 SOFTWARE SERVICE AGREEMENT

A. Not Required.

3.8 DEMONSTRATION

A. Train Owner's maintenance personnel to adjust, operate, and maintain units.

© 2023 CDM Smith
All Rights Reserved

END OF SECTION 406763

© 2023 CDM Smith
All Rights Reserved

SECTION 406863 - CONFIGURATION OF HMI SOFTWARE

PART 1 - GENERAL

1.1 RELATED DOCUMENTS

A. Drawings and general provisions of the Contract, including General and Supplementary Conditions and Division 01 Specification Sections, apply to this Section.

1.2 SUMMARY

A. If referred to anywhere else in the project manual, AE or AESS services include, but are not limited to, those services specified in this Section.

B. Provide all programming, configuration, and related services required to achieve a fully integrated and operational system. Control of all equipment to be in conformity with the Contract Drawings, process control descriptions, specifications, engineering data, instructions, and recommendations of the equipment manufacturer. Coordinate the control system for proper operation with related equipment and materials furnished by other suppliers under other Sections of these specifications and with related existing equipment. Include the following information:

1. Configuration of the HMI System Software, Operator Interface Terminals, and drivers provided for all equipment shown on the drawings, including equipment provided by vendor package systems.
2. Configuration of any alarm dialer provided.
3. Configuration of the SCADA Historian Software.
4. Configuration of system reports using the Reporting Software provided.
5. Communications and functionality data between all connected devices (such as PLCs) and the HMI software packages, including devices supplied by others, as depicted on the system architecture drawings in order to provide a comprehensive working system of data collection, storage and reporting.
6. Comply with City of Georgetown SCADA Programing Standard.

C. Coordinate all work with plant operating personnel to minimize impacts on daily operation. Note delays caused for any reason and formally submit to the Engineer and the Owner in the form of a letter.

D. Related Requirements:

1. Section 406100 “Process Control and Enterprise Management Systems General Provisions” for submittal requirements.
2. Section 406121.20 “Process Control System Testing.”
3. Section 406126 “Process Control System Training.”
4. Section 406196 “Process Control Descriptions.”
5. Section 406343 “Programmable Logic Controllers.”
6. Section 406863 “Configuration of HMI Software.”

7. Section 406866 "Configuration of Controller Software."

1.3 DEFINITIONS

A. Applications Engineering System Supplier (AESS): The entity who provides all programming, configuration, and related services for the control system equipment provided by the PCSS.

B. Human Machine Interface (HMI): A software-based user interface with supervisory level control and of machine level equipment.

C. Input/Output (I/O): Analog or digital field instrument signals to be received and interpreted by a PLC.

D. Operator Interface Terminal (OIT): A hardware component of the HMI used for device level control and monitoring.

E. Process Control System Supplier (PCSS): The entity responsible for providing all materials, equipment, labor, and services required to achieve a fully integrated and operational control system.

F. Programmable Logic Controller (PLC): A ruggedized programmable computer used for industrial automation.

1.4 PREINSTALLATION MEETINGS

A. Refer to Section 406100 "Process Control and Enterprise Management Systems General Provisions." The meetings below are in addition to the meetings specified in that section.

B. Schedule and conduct a standards and conventions workshop. The purpose of this workshop is to review the standards, conventions, and methodologies that will be used to program and develop the programs (i.e., HMI and PLC databases, HMI graphics, and PLC programming, etc.) and will solicit Engineer and Owner's input. Submit an agenda with examples for items to be discussed at client workshop.

C. Schedule and conduct a draft graphics review meeting. The purpose of this meeting is to present draft graphics for the Owner's and Engineer's review and feedback prior to creating the full set of graphics for review. For repetitive graphics such as graphics for multiple process trains, include an example of the first graphic only for discussion. Include discussion of process and overview displays, examples of pop-ups, trends, and system navigation tools. Expect major comments and incorporate any changes resulting from those comments.

D. Schedule and conduct a historical data management and reports workshop. The purpose of this workshop is to discuss and solicit Engineer/Owner input for storage and management of historical data; format of daily, monthly, and yearly reports; development of data entry templates; report formats and layouts; and user interface displays for accessing and generating reports. Bring examples of these documents for review and discussion.

E. Schedule and conduct a factory-testing coordination meeting, two weeks prior to factory testing. The purpose of this meeting is to discuss the specifics of proposed tests and provide a forum for coordinating required factory testing.

F. Schedule and conduct a field-testing coordination meeting, two weeks prior to field testing. The purpose of this meeting is to discuss specifics of proposed tests and provide a forum for coordinating required field-testing.

1.5 ACTION SUBMITTALS

A. Provide all required submittals in accordance with Section 013300 "Submittal Procedures." Provide the submittals listed below at a minimum:

1. System Standards and Conventions.
2. Operator Interface.
3. Controller Program.
4. Reports.
5. Historical Data Management.

B. System Standards and Conventions Submittal:

1. Following the standards and conventions workshop, submit standards and conventions to be used on this project. Define the submittal, at a minimum:

   a. Graphic display standards, including color conventions, equipment symbols, display format, equipment control pop-up displays, trend displays, and display navigation. Include samples of each proposed type of graphic display (i.e., overview, detail, diagnostic, tabular, etc.).
   b. System naming conventions, such as graphic displays naming, database naming, tag names, and computer naming.
   c. System configuration, including network addressing and PLC/RTU addressing.
   d. Alarm configuration standards, including priorities and logging.
   e. Security configuration standards, including user groups and privileges.
   f. PLC/RTU standard programming modules, including analog input scaling, flow totalization, equipment runtime, motor start/stop, valve open/close, and any other standard logic planned to be used.

2. To facilitate the Owner's future operation and maintenance, use the submitted standards and conventions as basis for programming and configuration of the system. Do not begin the system programming and configuration prior to the System Standards and Conventions Submittal.

C. Operator Interface

1. Following the approval of the standards and conventions submittal, submit a draft of all proposed graphic displays, examples of each type of pop-up (faceplate) displays, and examples of trends. For those graphics, which will be duplicated more than once for similar type of equipment, submit graphics for the first equipment only.
2. Following the draft graphics review meeting and prior to the factory test, submit a ready-for testing version of all graphic displays. These graphics should be completely finished other than the incorporation of comments and changes resulting from testing.
3. Submitted graphic displays and trends are to be no less than 8.5 inches by 11 inches and in full color.

D. Historical Data Management

1. Following the Historical Workshop, submit all aspects of the historical data management system and include as a minimum the following:

    a. A complete listing of all signals to be collected and stored, including data sampling rate and duration for which the data will be immediately accessible.
    b. Data reduction methods, rates, and the duration data will be immediately accessible.
    c. Storage space requirements and supporting calculations.
    d. Historical database design description, including data flow diagram, table definitions, procedures and queries used; and description of method of accumulating and displaying run times and flow totals. Define the method of interfacing to the reporting system, methods of handling Data Quality Flags, and methods of storing and displaying trending information.
    e. Description of methodology for restoring data collected locally during times when the historical data management system is not available. Description of database failure and recovery, including data correction.
    f. Description of selecting only the active real-time data source for systems that are utilizing redundant data acquisition nodes.
    g. List of data source interfaces to be used with the system (for example, OPC, file collection, historian-historian collector, HMI applications, etc.)

E. Reports

1. Following the Historical Workshop, submit all aspects of the reports generation system and include as a minimum the following:

    a. A complete list of all reports to be developed.

    b. Complete listing of all signals to be reported, including calculated values.
    c. Description of reporting data storage design, including method data is polled and stored.
    d. Description of methodology for entering manual data and interfaced used.
    e. Procedures for recall, generation and printing of reports
    f. Printout of each report to be provided with details of each cell, where data comes from, and calculation of raw data.

1.6 INFORMATIONAL SUBMITTALS

A. Refer to Section 406100 “Process Control and Enterprise Management Systems General Provisions.”

1.7 CLOSEOUT SUBMITTALS

A. Refer to Section 406100 “Process Control and Enterprise Management Systems General Provisions.”

PART 2 - PRODUCTS (NOT USED)

PART 3 - EXECUTION

3.1 GENERAL

A. The system specified performs the following generalized functions:

1. Allows the operator to control equipment such as pumps and valves as shown on the Drawings and as defined in Section 406196 “Process Control Descriptions.”
2. Perform real-time process control, including proportional integral derivative control action, sequencing, and process calculations.
3. Collect, calculate, and store accurate, reliable operating information for present and future uses.
4. Assist remote site operating personnel by noting and communicating of normal operating conditions and equipment failures.
5. Accumulate and store equipment running times for use in preventative maintenance.
6. Provide color graphic displays and reports for use by the system operating and supervisory personnel.
7. Provide trending for analog values.
8. Provide control system diagnostics.
9. Perform process control functions including PID, calculations, sequencing, timing, in the process controller. The HMI software performs the real-time database, report generation, graphic screens, program development, set point modification, data archiving, etc.
10. Allow the operator to manually control (by keyboard entry and mouse type pointing device) the status of pumps, valves, e.g., on/off, open/close, setpoint value,) when viewing the appropriate graphic screen on the HMI.

3.2 GRAPHIC DISPLAYS - GENERAL

A. Ensure displays contain and continuously update the displayed process variables, date and time of day, with process values showing in engineering units. Incorporate on displays:

1. References to both instrumentation tag numbers and plant equipment numbers.
2. Process variables on their associated display(s) with correct engineering units.
3. Process variables with their associated data quality flags.

B. Operator commands related to controlling field devices or system attributes require multiple keystrokes or mouse actions to protect against inadvertent operations. Confirmation to the operator for the selected point to be controlled is provided, at which time a cancellation of the control can be affected.

C. Process graphic displays are depicted from the P&ID's, site plan drawings, mechanical drawings and electrical drawings included in these Contract Documents. The graphic displays include process flow streams, process structures, and all major items of process equipment and control devices in a schematic format.

D. Include on main graphical screens a title bar, main graphic area, navigational buttons, and alarm summary bar.

1. Title bar displayed on the top of each screen and include display name, description and time/date.
2. Main graphical area contains primary screen data in graphical format.
3. Navigational buttons include a minimum of main menu, trends, main alarm summary, and security log in.

4. Alarm summary bar displays the last three valid alarms on the bottom of each screen.

E. Provide animation to mimic level changes in tanks or vessels, and to mimic rotation of rotating equipment when running. Valve colors to change when opened and closed.

F. Adjust from the operator interface timers, setpoints, alarm actuation levels, unless specifically noted.

G. Ensure the system show field conditions with text that can alternate (i.e., OPEN/CLOSE, START/STOP, HIGH/LOW) and change color correspondingly. Field devices that are tri-state must be represented in three conditions.

H. Ensure conditions in the field designated as alarm conditions report to the operator workstation, actuate an audible alarm, and provide a visual blinking image on the associated graphic page. Display alarms and events on the screen and archived.

I. Identify interlocks that affect equipment operation both by alarm and by HMI indication.

J. Check analog inputs for out of range (via high and low limit checks) and alarmed.

K. Label process flow streams and color-code using the project color schedule in Division 09. Identify structures and equipment by name and appropriate equipment and loop tags.

L. Color coding for equipment status and alarms is as follows:

1. Red for on or open.
2. Green for off or closed.
3. Active, unacknowledged alarms are indicated by flashing amber.
4. Active, acknowledged alarms are indicated solid amber.

M. Automatically record alarm and events should any of the following sequences or events occur:

1. Date/Time entry.
2. Limit changes.
3. Commanded or un-commanded change of any point.
4. Alarm conditions.
5. PLC activation or deactivation.
6. Operator login or logout activity.

N. There may be additional general programming requirements listed in Part 1 of the Section 406196 “Process Control Descriptions” that impact the HMI configuration.

3.3 SPECIFIC GRAPHIC SCREENS

A. At a minimum, provide the following types of graphic screen indicated below.

1. Plant Overview screen including a site plan representation, indicating the geographic location of each process and building.

2. Main menu screen linking all screens and process areas; complete and logical listing names and number of all screens.

3. Overall plant process block flow diagram screen showing major processes in block form with flow arrows. Each block includes a text description of key individual treatment processes. Navigational buttons to the individual treatment processes can be performed by pressing on the text description.
4. Individual treatment process screens graphically screening key process variables and equipment. Features:

    a. No operator entries are available from these screens.
    b. Individual process flow screens for each process include all process components, including tanks, pumps, blowers, mixers, drives, flow meters, valves, mechanical devices, as well as manual shutoff and isolation valves.
    c. These diagrams are generally depicted from the P&ID's with at least 1 screen per P&ID on average.

5. Individual unit process screens depicted from the P&ID's are used for control and screen of each major item of process equipment, process variables, and control devices, including pumps, blowers, valves, gates, mixers, and drives. Navigational buttons consist of the P&ID's flow arrows to other individual unit processes. The unit process screens provide the ability for the operator to go to individual equipment popup screens. These diagrams are generally depicted from the P&ID's with at least 2 screens per P&ID on average.
6. Provide popup screens for each piece of equipment to start/stop equipment, open / close valves, implement automatic control, adjust set points, establish and adjust tuning parameters, set alarm limits and initiate a sequence.
7. PLC system diagnostic screens, showing the operational status, and fault conditions of all PLC components, including processors, I/O modules, OIT's, power supplies and UPS units.
8. Communications diagnostic screens, showing the details of network status, communications status of all major components including Operator Work Stations, peripheral devices and network components.
9. Maintenance screens display the raw value for each analog and digital I/O point in the system. They allow the operators/maintenance personnel to enter an override value for an analog point that is then used by the system instead of the value read from the input card / communications link.
10. Trend screens with the capability to screen up to eight, operator assigned, analog and/or digital process variables. Each analog value will be shown on a trend screen.
11. Main alarm summary screen includes the following information for each alarm: Time, tag name, description, alarm type, current value and status. An acknowledge alarm button acknowledges all new unacknowledged alarms. Display alarms in the alarm summary screen and in the alarm banner as follows:

    a. Unacknowledged and active alarm: Displayed on screen, blinking.
    b. Acknowledged and active alarm: Displayed on screen, not blinking.
    c. Unacknowledged and inactive alarm: Displayed on screen, blinking. Text/background of the alarm displayed in a different color than active alarms.
    d. Acknowledged and inactive alarm: Not displayed in banner.
12. Analog variable screens showing a tabular summary of all plant process variables, in operator assigned groupings.

3.4 SECURITY

A. Configure and implement the system with security to prevent unauthorized access. The system allows authorized changes to system operation through defined user accounts and password verification.

B. Coordinate with Owner user account information, including login name and password for each account.

C. Assign security levels of "display only," "operator mode," "supervisor mode," and "engineer mode" through assignable passwords. On system startup, automatically enter the "display only" security level. In the "display only" mode, information is available to be displayed on the screen, but no changes may be made. In the "operator mode," changes may be made to process set points, times, etc.; however, the overall control concepts may not be modified. In the "supervisor mode," all operator functions can be modified, and any special reports or critical process set points (data can be modified; however, the overall control concepts may not be modified). In the "engineer mode" level, all user modifiable parameters of the system are available for modification.

3.5 ALARM/EQUIPMENT STATUS REPORTING

A. Display on the alarm log all alarms as they occur. Include on the alarm message the time of occurrence, tag name, tag number, and whether it is a low, high, or failure alarm. When the point in alarm returns to normal, the time, point identification number, and return to normal are displayed. Include on all reports the plant equipment number of the associated device.

B. Log the equipment status whenever a change in status occurs (i.e., start, stop). Include on the equipment status log the time, equipment name, tag number, and the particular change in status.

3.6 HISTORICAL DATA MANAGEMENT

A. Provide the following features for processing and storage of system historical data:

1. Each system point (analog or digital, real or pseudo) has the capability of being historically logged. A point can be deleted from historical log at any time. Points can be added or deleted from the system using minimal keystrokes.

2. Sample and store all process analogs and all flow totals and run time indications of all primary process equipment motors in the historical data management system.
3. Data Processing: Store the real time instantaneous values in a historical log file on the hard disk at defined sampling rates.
4. Data Correction: Manually modify historical data by personnel with appropriate security levels. Differentiate such data from actual monitored values on reports, in the database and in trends.
5. Data Quality: Propagate data Quality flags to the next higher level of the history based on user selectable percentage determining tolerance levels for averages and totals. If the percentage of suspect data exceeds the tolerance level, the suspect data flag propagates to the next higher level. Maximums and minimums are taken from good data.
6. Manual Input Data Handling: This data consists of additional values not obtainable by the system such as laboratory analysis for use in reports. Enter and store all manually entered data in the appropriate engineering units. Display all data entered for confirmation on the display prior to incorporation to the database.

3.7 REPORTS

A. Determine quantity and format of reports at the historical data management and reports workshop and as a minimum include shift, daily, monthly and yearly reports. Provide a minimum of 4 reports. See attachment A of this Section for examples of reports to be provided.

B. The system generates reports from on-line historical data files or prompt the user for the appropriate archived data files.

C. Initiate reports automatically based upon time of day or manually upon operator's request.

D. Develop user-interface displays for report generation with easy recall of reports by entering time:day:year target values.

E. User interface displays allows the operator to define the destination of the report (e.g., display, printer, computer file, etc.) and when to print (e.g., immediately, on demand, or automatically at a specified time).

F. Print quality tags alongside the value.

G. Identify values for which there are no data with a special character. Thus, print only values which are actually zero.

H. Operational Report Types. Provide the following operational report types with the system:

1. Shift Operation Summary Report:

    a. Summarize plant operation from the start and finish time of operation on an operator-adjustable time interval shift operation report.
    b. Consist of the following: correct date, plant name, report name, page number, group headings, subheadings, point identification, and engineering units.

2. Daily Operation Summary Report

    a. Summarize plant operation for the previous day on the daily operation report. Printed information is stored values (not averages) including scanned, lab, and manually entered data.
    b. The report format consists of the following: correct date, plant name, report name, page number, group headings, subheadings, point identifications, and engineering units.
    c. Also calculate the daily minimum, average, maximum, and total where applicable and print and store for each point.

3. Monthly Operation Summary Report:

    a. Summarize plant operation for the previous calendar month on the monthly operation summary report.
    b. Arrange the report format so that the first several pages conform to the requirements of the state regulatory agencies and separate from the rest of the monthly operation report for transmittal to the regulatory agency.

c. Report format similar to the daily operation summary report, consisting of the following: month and year, plant name, report name, page number, group headings, sub-headings, point identifications, and engineering units.
d. Print monthly minimum, average, maximum, and totals, where applicable, for each column of points printed.

4. Annual Operation Summary Report:

a. Summarize plant operation for the previous calendar year on the annual operation summary report. Report consists of scanned data, lab data, and manually entered data.
b. Format of the report is identical with the monthly operation summary report except for replacing month with year in the heading and replacing date with calendar month.

3.8 TESTING

A. Refer to Section 406121.20 “Process Control System Testing”.

B. Supplement to Field Testing requirements

1. Prior to leaving the site, use the Owner's programming computer to monitor all PLC processors online, make on-line changes, upload and download the processor to ensure programming software version compatibility.

2. Loop Tuning – Tune all PID control loops (single or cascade) following device installation but prior to commencement of the Functional Demonstration Test.

a. Achieve optimal loop tuning either by auto-tuning software or manually by trial and error, Ziegler-Nichols step-response method, or other documented process tuning method.
b. Determine and configure optimal tuning parameters to assure stable, steady state operation of final control elements running under the control PID. Adjust each control loop that includes anti-reset windup features to provide optimum response following startup from an integral action saturation condition.
c. Tune all PID control loops to eliminate excessive oscillating final control elements. Adjust loop parameters to achieve a decay ratio of 1/4 or better. In addition, achieve loop steady state at least as fast as the loop response time associated with critical damping.
d. Verify loop performance and stability by step changes to setpoint in the field.
e. Submit loop tuning documentation as specified in Part 1 of this Section.

3.9 TRAINING

A. Refer to Section 406126 “Process Control System Training” for general training requirements

B. Furnish training as shown in the table below.

Description	Minimum Course Duration (hours)	Maximum Number of Trainees per Course	Number of Times Course to be Given	Intended Audience
Onsite Training				
Control System Overview Seminar	2	12	1	Management
Operator Training (Pre start-up)	8	12	1	Operations
Operator Training (Post start-up)	8	12	1	Operations
Software Maintenance	2	2	1	Maintenance
System Reports and Historian	2	2	1	Maintenance

C. Control System Overview Seminar:

1. Provide Control System Overview seminar for the Owner's personnel at the Owner's facility. The objective of this seminar is to provide personnel with an overview understanding of the Control System. Target the seminar material to the Owner's management, engineering, and other non-operations personnel. The seminar includes, but not limited to, the following:

    a. An overview of the Control system explaining how the hardware and software supplied under this Contract is used for the operation and control of the facilities.
    b. A block diagram presentation of the Control system showing how and what information flow within the system and what each functional unit does.
    c. An explanation of the operator interfaces including a demonstration of how to use an operator's workstation to monitor, control, navigate, display trends, and all other operational features of the system. Address outside of this course a discussion of process control of individual processes.
    d. A walkthrough of the installed system explaining each of the items covered in the functional units' discussion. Discuss the features and functions of operator controls and interfaces.

D. Operator Control System Training (pre- or post start-up):

1. Cover during operator training plant operation with the control system and use of the HMI display screens, including at a minimum all the following items:

    a. Basics of HMI control and navigation.
    b. Alarming and Interlocks.
    c. Auto functionality of automated processes and HMI control.
    d. Failure modes of equipment and operator responses.

2. Hold a minimum of two operator-training sessions (Pre-Startup) for operators one week before system startup. Use the Simulator specified in this project for the pre-startup training. Hold additional one or two operator-training sessions (Post-Startup) for operators one week after system startup.
3. Hold operator training at the convenience of the Owner. Hold this training during the day, late at night, or very early in the morning to accommodate the Owner's shift schedule.
4. Operator training is introductory in nature during pre-startup training and more in-depth and detailed during post-startup training.

5. At a minimum, provide the following teaching aids for distribution during Operator training sessions:

    a. Preliminary O&M Manuals (pre-startup); Final O&M Manuals (post-startup).
    b. P&IDs.
    c. Daily syllabus.

6. Fifty percent of the Operator training is "hands on" utilizing the installed Control System to the fullest extent possible. Confirm the operability of the Control System before commencing training. Training performed using a non-functioning Control System is not permitted.

E. Software Maintenance:

1. Provide training of how to back-up PLCs, HMIs, OITs, and any other software in this system.
2. Provide training on all aspects covered in the O&M Software Maintenance Manuals.
3. Provide training on PLC program structure, HMI configuration structure, tips in how to edit programming code, and other items which will supplement the maintenance staff's ability to edit and maintain the programs.

F. Historian and System Reports:

1. Provide training of how to run the reports, how to manually enter data, and how to print and reprint the reports.
2. Provide training on how to execute data queries that are outside of those defined in the reports.
3. Provide training on Historian configuration, report configuration, database maintenance and backup, and repair of failed reports.

END OF SECTION 406863

© 2023 CDM Smith
All Rights Reserved

SECTION 406866 - CONFIGURATION OF CONTROLLER SOFTWARE

PART 1 - GENERAL

1.1 RELATED DOCUMENTS

A. Drawings and general provisions of the Contract, including General and Supplementary Conditions and Division 01 Specification Sections, apply to this Section.

1.2 SUMMARY

A. If referred to anywhere else in the project manual, AE or AESS services include, but are not limited to, those services specified in this Section.

B. Provide all programming, configuration, and related services required to achieve a fully integrated and operational system. Control all equipment in full conformity with the Contract Drawings, process control descriptions, specifications, engineering data, instructions, and recommendations of the equipment manufacturer. Coordinate the control system for proper operation with related equipment and materials furnished by other suppliers under other Sections of these specifications and with related existing equipment.

1. Provide configuration of the PLCs shown on the drawings, except for controls equipment shown being provided as part of a vendor package system.

C. Coordinate all work with plant operating personnel to minimize impacts on daily operation. Note delays caused for any reason and formally submitted to the Engineer and the Owner in the form of a letter.

D. Related Requirements:

1. Section 406100 “Process Control and Enterprise Management Systems General Provisions” for submittal requirements.
2. Section 406196 “Process Control Descriptions.”
3. Section 406343 “Programmable Logic Controllers.”
4. Section 406863 “Configuration of HMI Software.”

1.3 DEFINITIONS

A. Applications Engineering System Supplier (AESS): The entity who provides all programming, configuration, and related services for the control system equipment provided by the PCSS.

B. Human Machine Interface (HMI): A software-based user interface with supervisory level control and of machine level equipment.

C. Input/Output (I/O): Analog or digital field instrument signals to be received and interpreted by a PLC.

D. Operator Interface Terminal (OIT): A hardware component of the HMI used for device level control and monitoring.

E. Process Control System Supplier (PCSS): The entity responsible for providing all materials, equipment, labor, and services required to achieve a fully integrated and operational control system.

F. Programmable Logic Controller (PLC): A ruggedized programmable computer used for industrial automation.

1.4 PREINSTALLATION MEETINGS

A. Refer to Section 406100 “Process Control and Enterprise Management Systems General Provisions.” The meetings below are in addition to the meetings specified in that section.

B. Refer to Section 406863 “Configuration of HMI Software” for requirements of the standards and conventions workshop.

1.5 ACTION SUBMITTALS

A. Controller Program Submittal

1. For each controller, submit the following using the controller manufacturer's built in printing functions. Electronic submission of Adobe Portable Document Format ("pdf") files in lieu of paper submittals is acceptable. Review will be for general program organization, level of documentation, and overall programming standards (basic pump and valve control, for example). The review will not attempt to confirm the logic works correctly for every loop.

    a. PLC programs showing ladder logic, function block, high level language or another controller language used. Include individual rung, network, and/or command descriptions with abundant comments to clearly identify function and intent of each code segment. Clearly present each logic segment, describe the function of each timer, label and define the purpose of each subroutine call, etc. Ensure that program documentation is sufficiently clear to allow determination of compliance with the process control requirements included in the control descriptions and with the Drawings. The submittal demonstrates that all logic provided under this project follows the same structure and format and reflects a common programming approach.
    b. Submit a memory usage report for the controller. Indicate total memory capacity and unused memory capacity.
    c. Submit cross reference index of I/O allocation and controller memory address. Include every physical I/O point as well calculated or virtual I/O required for the implementation of the process scheme.

2. Submit details of control system communication. Submit a "memory map" or other means showing which signals are exchanged between PLCs. Also submit an HMI tag database showing all signals exchanged between the PLCs and HMI. Define any specific communication block memory addresses.

B. Submit all electronic files associated with the controller such that the Owner and Engineer can open a complete copy of the controller program using the controllers native programming package.

PART 2 - PRODUCTS (NOT USED)

PART 3 - EXECUTION

3.1 CONTROLLER PROGRAMS

A. Develop all application programs in a structured manner and follow an intuitive arrangement so that an instrumentation technician with basic programming knowledge will be able to understand. Utilize standard program templates or subroutines for repetitive logic such as equipment control, flow total calculations, equipment runtime calculations.

B. Make changes to the application programs and software configuration, based on comments during the submittals, the factory tests, the field tests, and during the commissioning process to meet the design intent, at no additional cost to the Owner.

END OF SECTION 406866

© 2023 CDM Smith
All Rights Reserved

This page intentionally left blank.

© 2023 CDM Smith
All Rights Reserved

SECTION 407000 - INSTRUMENTATION FOR PROCESS SYSTEMS

PART 1 - GENERAL

1.1 RELATED DOCUMENTS

A. Drawings and general provisions of the Contract, including General and Supplementary Conditions and Division 01 Specification Sections, apply to this Section.

1.2 SUMMARY

A. Section includes the general requirements to furnishing, installing, and servicing PCSS provided instruments.

B. Related Requirements:

1. Section 406100 “Process Control and Enterprise Management Systems General Provisions” for submittal requirements.
2. Section 406121.20 “Process Control System Testing”.
3. Section 406126 “Process Control System Training”.
4. Appendix A- Instrument List.

1.3 DEFINITIONS

A. Process Control System Supplier (PCSS): The entity responsible for providing all materials, equipment, labor, and services required to achieve a fully integrated and operational control system.

B. Double Pole Double Throw (DPDT): A switch with 2 inputs and 4 outputs. Each input has 2 corresponding outputs to control.

1.4 ACTION SUBMITTALS

A. Submit complete documentation for all field instruments in one comprehensive submittal. Use ISA-TR20.00.01-2007 data sheet format as a cover sheet for each instrument prior to data sheets. Submit a complete Bill of Materials (BOM) or Index that lists all instrumentation equipment, sorted by Loop Number.

B. Submit separate data sheets for each instrument type:

1. Plant Equipment Number and ISA tag number per the Drawings.
2. Product (item) name used herein and on the Drawings.
3. Manufacturer's complete model number.
4. Location of the device.
5. Input - output characteristics.
6. Range, size, and graduations in engineering units.

C. Submit the following information for each instrument type:

1. Include construction details, material descriptions, dimensions of individual components and profiles.
2. Sizing calculations where applicable.
3. Indicate which instruments will be provided with certified calibration data (i.e., all flow metering devices) as part of O&M manual.
4. Include rated capacities, operating characteristics, electrical characteristics and furnished specialties and accessories.
5. Two-wire or four-wire device type as applicable.
6. Indicate which instruments will be provided with manufacturer's maintenance services if specified.

D. Instrument Vendor Shop Drawings:

1. Include plans, elevations, sections, and mounting details.
2. Include details of equipment assemblies. Indicate dimensions, weights, loads, required clearances, method of field assembly, components, and location and size of each field connection.
3. Detail fabrication and assembly of instrument.
4. Include diagrams for power, signal, and control wiring.

E. Submit catalog cuts for all instruments. Submit descriptive literature for each hardware component, which fully describes the units being provided.

F. Submit index and data sheets in electronic format as well as hard copies> on 8-1/2 inch x 11 inch formats. Submit electronic copies in Microsoft Excel or Word format on DVD disk or USB thumb drive.

1.5 INFORMATIONAL SUBMITTALS

A. Refer to Section 406100 "Process Control and Enterprise Management Systems General Provisions."

B. Product Test Reports: For each PCSS provided instruments for tests performed by manufacturer and witnessed by a qualified testing agency.

C. Evaluation Reports: For PCSS provided instruments.

1.6 CLOSEOUT SUBMITTALS

A. Refer to Section 406100 "Process Control and Enterprise Management Systems General Provisions."

1.7 MAINTENANCE MATERIAL SUBMITTALS

A. Refer to Section 406100 "Process Control and Enterprise Management Systems General Provisions" for PCSS requirements regarding submission of maintenance materials.

B. Furnish extra materials, from the same product run, that match products installed and that are packaged with protective covering for storage and identified with labels describing contents.

1. One pressure gauge for each type provided.
2. One pressure switch for each type provided.
3. One level indicating transmitter for each type of level element provided.
4. Diaphragm Seal: Provide diaphragm seal equal to 10 percent of quantity installed, but no fewer than 2 units for each type of diaphragm seal.
5. Sensor Fill: Provide sufficient sensor fluid to facilitate replacement or service of one pressure tree.
6. Furnish one of each type of installed Surge protection devices.

1.8 QUALITY ASSURANCE

A. Refer to individual instrument specifications for quality assurance requirements as well as which specific instruments require manufacturer's start-up and training services.

B. Provide components compatible with functions required to form complete working system.

C. Refer to Section 406100 "Process Control and Enterprise Management Systems General Provisions" for overall quality assurance requirements for PCSS scope of work.

1.9 DELIVERY, STORAGE, AND HANDLING

A. Refer to Section 016000 "Product Requirements" for delivery, storage, and handling requirements.

1.10 FIELD CONDITIONS

A. Refer to Section 406100 "Process Control and Enterprise Management Systems General Provisions."

1.11 WARRANTY

A. Refer to Section 406100 "Process Control and Enterprise Management Systems General Provisions."

PART 2 - PRODUCTS

2.1 SYSTEM DESCRIPTION

A. Provide sensors, field preamplifiers, signal conditioners, offset and span adjustments, amplifiers, transducers, transmitters, control devices, interconnecting cables, and unit conversions and algorithms as required for application.

2.2 INSTRUMENT TAGS

A. Permanent stainless steel or other non-corrosive material tag firmly attached and indelibly marked with the instrument tag number, as indicated in the Drawings. Tag equipment before shipping to the site.

B. Provide 1/8-in by 3/8-in, Type 316 stainless-steel button head machine screws.

C. All supplied instrument transmitters and instrument transmitter elements require a stainless-steel identification tag. Attach tag via stainless steel chain or stainless-steel wire (24-gauge min) to a non-removable part of the device. Stamp the ISA alphanumeric instrument number as indicated on the P&ID, loop, or detail drawings into the tag. Minimum tag size is 1” H x 3” W with 3/16” high alphanumeric characters.

2.3 PRESSURE GAUGES

A. Manufacturers:

1. Manufacturers and their products are subject to compliance with requirements. Provide one of the following:
   a. Ametek US Gauge.
   b. Ashcroft.
   c. Weksler.
   d. Or approved equal.

B. Type:

1. Bourdon tube actuated dial face pressure gauge.

C. Function/Performance:

1. Accuracy: Plus or minus 1.0 percent of full-scale range.
2. Provide for zero-reading adjustment.
3. Adjusting Screws: Accessible from rear of case without need for disassembly.
4. Comply with ASME B40.100.

D. Physical:

1. Dial:
   a. Nominal Diameter: 4-1/2 inches.
   b. Face: White, laminated plastic dials with black graduations.
   c. Scale: Extend over arc not less than 200 and not more than 270 degrees.
   d. Ranges and Graduation Units: As indicated on instrument schedule in Appendix.

2. Cases:
   a. Liquid filled.
   b. Material: Phenolic or Type 316 stainless steel.
   c. Provide removable rear plate.
   d. For gauge pressure, vented case for temperature/atmospheric compensation
   e. Windows:

1) Material: Shatterproof glass.
2) Thickness: 1/8 inches.
3) Provide gasket.

3. Bourdon Tubes:
   a. Material: Stainless steel, to brass socket.
   b. Provide welded, stress-relieved joints.

4. Connection:
   a. Location: Bottom.
   b. Socket:
      1) 1/2-inch NPT male thread.
      2) Material: Brass forging.
      3) Extend minimum 1-1/4 inches below gage cases.
      4) Provide wrench flats.
   c. Mounting: Stem or surface.

E. Required Accessories:

1. Provide isolation valve.
2. Shutoff Cocks: Furnished by gauge manufacturer.
3. Special scales: Engineer reserves the right to require special scales and/or calibration if the manufacturer's standard is not suitable for the application.
4. Liquid fill gauges at the factory.

2.4 FLOAT SWITCHES

A. Manufacturers:

1. Manufacturers and their products are subject to compliance with requirements. Provide one of the following:
2.
   a. Contegra FS 90.
   b. Siemens Water Technologies Model 9G-EF.
   c. VEGA Americas, Inc
   d. Or approved equal

B. Type:

1. Mercury free ball float switch.

C. Function/Performance:
   a. Differential: Less than 8-inch.
   b. Type of Switch: SPDT snap switch.
   c. Switch Rating: 1A at 120 VAC or 100 VA @ 120 VAC.

D. Physical:

1. Type 316 stainless steel, Teflon or non-stick coating, minimum 5-inch diameter.
2. Totally encapsulated switch.

3. Heavy-duty cable, PVC or equivalent jacketed integral to float.
4. The element shall include Type 316 stainless steel rigid type probes for lengths up to six feet. For probe lengths longer than six feet, provide wire suspended probes within a protective plastic shield suspended and PVC insulated wires.

E. Required Accessories:

1. Provide stainless steel hardware.
2. Lead wire to be a waterproof cable of sufficient length so that no splice or junction box is required in the vault.
3. Provide cast-aluminum weatherproof junction box outside the sump pit with terminals for all floats and tapped as required for conduit connections.
4. Provide mounting equipment as shown on the drawings.

2.5 PRESSURE SWITCHES

A. Manufacturers:

1. Manufacturers and their products are subject to compliance with requirements. Provide one of the following:
   a. Ashcroft.
   b. Mercoid.
   c. Static-O-Ring (SOR).
   d. Or approved equal.

B. Type:

1. Pressure: Diaphragm actuated.

C. Materials:

1. Diaphragm: Stainless steel.
2. Wetted parts: 316L Stainless Steel.
3. Seals: Viton.
4. Connection port: 316 Stainless Steel.

D. Accuracy:

1. Pressure: Plus or minus 5 percent of operating range.

E. Repeatability: Better than 1 percent of full scale.

F. Dead Band: Adjustable to 60 percent of full scale.

G. Set Points: Adjustable between 20 and 80 percent of adjustable range.

H. Reset: Unit shall be of the automatic reset type unless noted otherwise in the Instrument Device Schedule.

I. Over Range Protection: Over range protection to 150 percent of the maximum process line pressure.

J. Hermetically sealed switches.

K. Connection:

1. Location: Bottom.
2. Size: 1/4 inch.
3. Provide taps for sensing lines.

L. Electrical:

1. Contacts:
   a. One or Two as detailed on the drawings.
   b. SPDT.
   c. Type: Snap action, according to NEMA ICS 1.

2. Ampacity: 10 A at 230 V AC.

M. Enclosures: NEMA 250 Type 4X.

N. Operation:

1. Control Power Wiring: as specified in section 262726 “Wiring Devices”.

O. Accessories:

1. Valves:
   a. Pressure: Provide a Type 316 stainless steel shutoff valve. Valve shall be by D/A Manufacturing, Anderson Greenwood, or Equal.
   b. Where indicated on the drawings, provide an inline, threaded diaphragm seal or flanged annular seal for isolation between the process and the pressure switch.

2. Where indicated on the instrument device schedule, provide a Type 316 stainless steel snubber for pulsation dampening.

2.6 DIAPHRAGM SEALS – ANNULAR FLANGE MOUNTED

A. Manufacturers:

1. Manufacturers and their products are subject to compliance with requirements. Provide one of the following:
   a. Red Valve
   b. Wika
   c. Siemens
   d. Or approved equal

B. Type:

1. Line mounted, between two flanges.

C. Function/Performance:

1. Pressure Limit: Correspond to flange ratings.
2. Inside diameter conforms to the dimensions of the pipe where the seal is installed.
3. ANSI or DIN Flange Class: Equivalent to the flange class of the piping where the seal is installed. Bolting dimensions conform to ANSI or DIN drilling specifications as required by the installation.

D. Physical:

1. Body material and Flange: Type 316 stainless-steel and compatible with process connection.
2. Process connection: Match process connection of associated pressure instrument.
3. Wetted Parts and Bolt Materials: Corrosion resistant to process fluid.
4. Sensing Liquid: Silicone Oil.

E. Accessories:

1. For pressure gauge and pressure switch combination assemblies that are sensing pressure on sludge or thickened solids, provide an annular seal with ball valve and quick connection for use in flushing out the seal.

F. Diaphragm Seals:

1. Factory-assemble, fill, and calibrate entire assembly prior to shipment.
2. Field filling is not acceptable.

G. Provide shop inspection and testing of completed assembly.

2.7 NON- CONTACT RADAR-LEVEL MEASUREMENT DEVICE

A. Manufacturers:

1. Manufacturers and their products are subject to compliance with requirements. Provide one of the following:
2.
   a. VEGA Americas, Inc. Model Vegapuls C23
   b. Or Equal

B. Type:

1. Non-contact, microwave type level meter.

2. High 24-26 GHZ radar frequency for continuous level measurement of slurry, corrosive liquids, low dielectric liquids and bulk solids in storage vessels. Also, for measurement in tall or narrow tanks and for processes that have high pressure and temperature.]

3. Antenna: Rod, Horn, Parabolic, or Encapsulated.

C. Function/Performance:

1. Measuring Range: As shown in the instrument schedule in Section 407000.

2. Accuracy: Plus or minus 0.32 inches (8 mm).
3. Operating Temperature: -40 to 149 degrees F (-40 to 65 degrees C).
4. Output: Isolated 4-20 mA output.
5. Display: Digital indicator displaying level or volume in engineering units or percent, as indicated on the Drawings or in the Instrument Device Schedule.
6. Diagnostics: On-screen instructions and display of self-diagnostics.

D. Physical:

1. Antenna: PVDF, Type 316 stainless-steel, Hastelloy C or other material depending upon its compatibility to the process in which it is measuring.
2. Provide integral antenna with transmitter.
3. Provide with a minimum Class 150 pound (DN 80, PN16) mounting flange to match vessel flange size, material and class when mounted on vessel.

4. NEMA 4X (IP66) and/or NEMA 6P housing. Where the instrument is installed in a hazardous area, provide explosion-proof housing, approved for Class I, Division 1, Groups C and D installation and certified for installation of the antenna in a Class I, Division 1, Groups C and D (Zone 0) environment.

5. Power Requirements**:** 24 VDC loop powered with intrinsically safe barriers.
6. Remote Display: Digital indicator displaying level or volume in engineering units or percent, as indicated on the Drawings or in the instrument schedule. Display unit used to remotely program the transmitter.

E. Required Accessories:

1. Hand-held programmer where required for configuration and calibration of the instrument.

F. Manufacturer Start-up and Training services:

1. Provide manufacturer's start-up and training services as specified in the start-up and training services paragraph.

2.8 SOURCE QUALITY CONTROL

A. Provide shop inspection and testing of completed assembly.

PART 3 - EXECUTION

3.1 EXAMINATION

A. Examine walls, floors, roofs, and process area for suitable conditions where instruments will be installed.

B. Prepare written report, endorsed by Installer, listing conditions detrimental to performance.

C. Proceed with installation only after unsatisfactory conditions have been corrected.

3.2 INSTALLATION

A. Comply with NECA 1.

B. Wiring Method: Conceal conductors and cables in accessible ceilings, walls, and floors where possible.

C. Wiring within Enclosures: Bundle, lace, and train conductors to terminal points with no excess and without exceeding manufacturer's limitations on bending radii.

D. Mount instrumentation on instrumentation racks or stands, unless otherwise indicated. Provide shutoff and drain valves on all instrumentation connections.

3.3 CONNECTIONS

A. Refer to Section 260526 “Grounding and Bonding for Electrical Systems.”

3.4 IDENTIFICATION

A. Refer to Drawings for tagging designations.

3.5 FIELD QUALITY CONTROL

A. Perform the tests and inspections in accordance with the following:

1. Section 406100 “Process Control and Enterprise Management Systems General Provisions”.
2. Section 406121.20 “Process Control System Testing”.

B. Instrument will be considered defective if it does not pass tests and inspections.

C. Prepare test and inspection reports in accordance with the following:

1. Section 406100 “Process Control and Enterprise Management Systems General Provisions”.
2. Section 406121.20 “Process Control System Testing”.

3.6 STARTUP SERVICE

A. Perform the following services with the assistance of a factory-authorized service representative:

1. Complete installation and startup checks according to manufacturer's written instructions.

2. The start-up services include calibration, oversight of installations of the sensor, and start-up of the sensor/transmitter in order to provide reliable measurement at the instrument. The factory-authorized service representative or manufacturer shall work with the PCSS and AESS to verify the transmitter sends correct information to the control

system (i.e., that the scaling and units are the same at the instrument and on the control system's operator interface/PLC). Submit an instrument calibration report in order to document the calibration procedure of the instruments.

3.7 MAINTENANCE SERVICE

A. Not required.

3.8 DEMONSTRATION

A. Train Owner's maintenance personnel to adjust, operate, and maintain units.

B. While starting up the instruments, the manufacturer shall provide training to the Owner's instrumentation technicians. Train how to calibrate, install, troubleshoot, read the diagnostics, and maintain the sensor and transmitter. Provide 1 time training that lasts up to 8 hours in the field.

3.9 FIELD INSTRUMENT SCHEDULE

A. Appendix A "Instrument List".

3.10

END OF SECTION 407000

APPENDIX 407000-A Instrument List

Drawing	Instrument	Type	Descriptions	Specification	Detail	Instrument Ranges	Operating Range/ Setpoint
I-4	PI-101	Pressure Gauge	Cedar Breaks Submersible Sewage Pump No.1 Discharge Pressure	407000 section 2.3	IZ-1, B	0-60 PSI	36 PSI
I-4	PSH-101	Pressure Switch High	Cedar Breaks Submersible Sewage Pump No.1 Discharge Pressure High Level Alarm	407000 section 2.5	IZ-1, B	0-100 PSI	58 PSI
I-4	PI-102	Pressure Gauge	Cedar Breaks Submersible Sewage Pump No.2 Discharge Pressure	407000 section 2.3	IZ-1, B	0-60 PSI	36 PSI
I-4	PSH-102	Pressure Switch High	Cedar Breaks Submersible Sewage Pump No.2 Discharge Pressure High Level Alarm	407000 section 2.5	IZ-1, B	0-100 PSI	58 PSI
I-4	PI-103	Pressure Gauge	Cedar Breaks Submersible Sewage Pump No.3 Discharge Pressure	407000 section 2.3	IZ-1, B	0-60 PSI	36 PSI
I-4	PSH-103	Pressure Switch High	Cedar Breaks Submersible Sewage Pump No.3 Discharge Pressure High Level Alarm	407000 section 2.5	IZ-1, B	0-100 PSI	58 PSI
I-4	LE/LIT-100	Radar Level Transmitter	Cedar Breaks Radar Level Transmitter	407000 section 2.7	IZ-1, D	0-25 FT	-
I-4	LSLL-100	Float Switch	Cedar Breaks Lift Station Wet well Low Low Level Switch	407000 section 2.4	IZ-1, A	775 Elevation	-
I-4	LSL-100	Float Switch	Cedar Breaks Lift Station Wet well Low Level Switch	407000 section 2.4	IZ-1, A	776 Elevation	-
I-4	LS1-100	Float Switch	Cedar Breaks Lift Station Wet well Lead Level Switch	407000 section 2.4	IZ-1, A	778 Elevation	-
I-4	LSH-100	Float Switch	Cedar Breaks Lift Station Wet well Lag Level Switch	407000 section 2.4	IZ-1, A	779 Elevation	-
I-4	LSHH-100	Float Switch	Cedar Breaks Lift Station Wet well High Level Switch	407000 section 2.4	IZ-1, A	780 Elevation	-

THIS PAGE INTENTIONALLY LEFT BLANK

© 2023 CDM Smith
All Rights Reserved

SECTION 432513.11 – WET-PIT SUBMERSIBLE SOLIDS HANDLING PUMPS

PART 1 - GENERAL

1.1 RELATED DOCUMENTS

A. Drawings and general provisions of the Contract, including General and Supplementary Conditions and Division 01 Specification Sections, apply to this Section.

1.2 SUMMARY

A. Section Includes:

1. Submersible solids handling pumps mounted in wet pit configuration, including their respective motors.
2. Supervisory services during installation and field testing of each unit and instructing the regular operating personnel in the proper care, operation, and maintenance of the equipment.

B. Related Requirements:

1. Section 013300 – Submittal Procedures: Requirements for submittals.

2. Section 033000 “Cast-in-Place Concrete” Concrete Work, except anchor bolts which are as recommended by Manufacturer and furnished by the Contractor.
3. Section 055000 “Metal Fabrications” for access hatches and miscellaneous metals.
4. Section 260519 “Low-Voltage Electrical Power Conductors and Cables” Equipment wiring.
5. Section 400507 “Hangers and Supports for Process Piping” Appurtenances and pipe hangers and supports related to process mechanical work.
6. Section 400551 “Common Requirements for Process Valves” Valves related to process mechanical work.
7. Section 406196 “Process Control Descriptions” for pump operation and controls.

1.3 COORDINATION

A. Coordinate Work of this Section with Section 400593.23 “Low-Voltage Motor Requirements for Process Equipment”.

1.4 ACTION SUBMITTALS

A. Product Data: Submit literature, which may include drawings, describing the equipment in sufficient detail, including materials of construction, to indicate full conformance with the detailed specifications for each pump model proposed. Literature shall include documentation of previous production of each pump model proposed.

1. The total weight of the equipment including the weight of the single largest item.
2. A complete materials table for all equipment establishing compliance with these specifications.
3. A list of the Manufacturer's recommended spare parts with the Manufacturer's current price for each item.

    a. Include gaskets, seals, etc. on the list.
    b. List all bearings by the bearing manufacturer's numbers only.

4. A complete total bill of materials of all equipment.

B. Shop Drawings:

1. Certified dimensional drawings showing all important details of pump construction and auxiliary apparatus.
2. Submittal shall demonstrate that hatch clear opening is sufficient for the pump supplied.
3. Pump support design details showing anchor bolt locations, sizing information, and installation requirements.
4. Complete wiring diagrams and schematics of all power and control systems showing wiring requirements between all system components, motors, sensors, control panels and related systems.
5. Complete motor data, including, but not limited to:

    a. Type of enclosure design.
    b. Rated horsepower.
    c. Rated voltage.
    d. FLA.
    e. Starting current.
    f. LRA.
    g. LR KVA.
    h. NEMA starting code letter and insulation code letter.
    i. RPM.
    j. Input power in kW at nameplate rating.
    k. Starting calculations.
    l. Cable size.
    m. Winding temperature rise.
    n. Speed torque curves.
    o. Recommended trip and alarm setting for temperature and vibration protective device.
    p. Power and control cable size and materials of construction, details of cable sealing method, description and type of motor thermal protection, description of insulation system and service factor.

1.5 INFORMATIONAL SUBMITTALS

A. Manufacturer's Certificate:

1. Manufacturer's certification of installation as specified in PART 3.
2. Manufacturer’s installation, operation, and maintenance manuals as specified in PART 3.
3. Manufacturer's field report as specified in PART 3.

B. Test and Evaluation Reports:

1. Description of proposed pump factory test plan including procedures and equipment.
2. Description of proposed field test plan including procedures and equipment.
3. Factory and field performance test data as specified in PART 2 and PART 3 for approval.
4. A schedule of the date of factory testing and delivery of the equipment to the job site.

C. Manufacturer's Instructions:

1. Submit detailed instructions on installation requirements, including storage and handling procedures.

D. Source Quality-Control Submittals: Indicate results of factory tests and inspections.

E. Field Quality-Control Submittals: Indicate results of Contractor-furnished tests and inspections.

1. Identify the entity and experienced individual who will inspect the installation in accordance with Article “Inspection and Testing.”.

F. Qualifications Statement:

1. Submit qualifications for Manufacturer.

G. Complete description of surface preparation and shop painting for pumps and motors.

H. Critical speed analyses report submittal including Campbell diagrams and backup documentation and a statement of guarantee that the critical speed analyses as required in Paragraph 1.8.I of this Section have been completed and that the specified limitations/separation margins will be met.

I. Design Data:

1. Guaranteed performance curves to ANSI/HI 14.6 acceptance grade 1U for specified (intermediate) design point and acceptance grade 1E for the other specified points, based on actual factory tests of similar units, which show that they meet the specified requirements for head, flow rate, overall efficiency, guaranteed maximum net positive suction head required (NPSH3), submergence and horsepower.

a. Submit curves on 8 1/2-inch by 11-inch sheets, at as large a scale as is practical.
b. Plot curves from zero flow at shut off head to pump flow rate at minimum specified total head (TH).
c. The POR and AOR (refer to ANSI/HI 9.6.3) shall be clearly shown on the curves.
d. This information shall be prepared specifically for the pump proposed. Catalog sheets showing a family of curves will not be acceptable.

J. Submit warranty information to demonstrate conformance to “Warranty” Article.

1.6 CLOSEOUT SUBMITTALS

A. Section 0170 00 - Execution and Closeout Requirements: Requirements for closeout procedures.

B. Project Record Documents: Record actual locations and final orientation of equipment and accessories.

C. Operation and Maintenance Data:

1. Operating and maintenance manual shall be furnished by the Manufacturer to Engineer.
2. Prepare manuals specifically for this installation and shall include all required cuts, drawings, equipment lists, description, etc. that are required to instruct operating and maintenance personnel unfamiliar with such equipment.
3. Maintenance instructions shall include troubleshooting data, full preventative maintenance schedules, and complete spare parts lists with ordering information.

1.7 MAINTENANCE

A. Furnish all special tools and test equipment required for the proper servicing of all equipment furnished. All such tools and test equipment shall be furnished in a suitable steel tool chest complete with lock and duplicate keys.

B. Manufacturer shall furnish a complete list of recommended spare parts, gaskets, lubricants and sealants, and heat transfer medium necessary for the first five years operation of each pumping system. At a minimum, the following spare parts shall be provided:

1. One mechanical seal per pump.
2. One spare impeller, key, nut, and washer of opposite rotation than assembly per pump model.

C. Package all spare parts in one container and clearly identify on the container labeling the pump station the parts are for. Seal tightly and properly protect, for long term storage.

1.8 QUALIFICATIONS

A. To assure unity of responsibility, the pumps, motors, guide rails, access hatches and other auxiliary equipment shall be furnished and coordinated by the Manufacturer. The Contractor and Manufacturer shall assume responsibility for the satisfactory installation and operation of the entire pumping system including pumps, motors, and accessories.

B. Equipment covered by this Section is intended to be standard pumping equipment of proven ability as manufactured by companies having extensive experience in the production of such equipment.

1. Units specified herein shall be furnished by a single manufacturer.
2. Equipment provided shall be designed, constructed and installed to operate satisfactorily when installed as shown on the Drawings or as approved by the Engineer.

C. Manufacture pumps in accordance with the Hydraulic Institute Standards, except where otherwise specified.

D. Manufacturer or its representative shall have an authorized warranty center within a 300-mile radius of the job site, fully staffed with factory trained mechanics, and equipped with a stock of strategic spare parts for each model of pump furnished under this contract. The service facility and strategic spare parts shall be established prior to delivery of equipment for this project.

E. Manufacturer: All equipment furnished under this Specification shall be new and unused, shall be the standard product of manufacturers having a successful record of manufacturing and servicing similar equipment and systems to that specified herein for a minimum of five years.

F. Furnish pumping equipment complete with accessories required and shall meet the detailed requirements of Specifications.

G. Manufacturer shall be certified to the ISO 9001 standard for design and manufacture of submersible solids handling pumps.

I. Factory testing shall be conducted to demonstrate compliance with specified vibration characteristics.

1. Equip pumps with a temporarily mounted vibration sensor and associated data processor to facilitate factory testing to measure and record the vibration velocity (inches per second RMS) over the full range of operating conditions specified in Article 2.02 with test setup which matches actual installation as closely as practicable, in accordance with ANSI/HI 9.6.4-latest.
2. Application specific test procedure shall be submitted for approval by Engineer a minimum of six weeks prior to the testing.
3. Prior to manufacture, a statement shall be submitted to the Engineer certifying that the required torsional and lateral dynamic vibration analyses have been completed or historical analysis results for the specified pump model, if matching the proposed pump/motor, are available to confirm that the first torsional and lateral critical speeds are at least 20 percent above the maximum pump speed and blade pass frequency or 20 percent below the minimum pump speed, assumed to be 60 percent of the FLS.
4. Manufacturer shall factory test each pump, including the cables suspended as in the field, to demonstrate that no harmful resonance of the system occurs between 1x full speed, 2x full speed, or number of vanes times running speed and any bending mode natural frequencies within the operating range (60 to 100 percent full load speed) plus 20 percent separation margin above and below. Detailed test report shall be submitted summarizing findings.
5. Lateral rotodynamic analysis results:

    a. Lateral rotodynamic analysis results for specified pump model, performed by Manufacturer, shall provide the first lateral critical speed to demonstrate 20 percent separation above and below specified speed range including vane pass frequency.
    b. Any pump component excited resonant frequency shall be no closer than plus or minus 20 percent of the natural frequency of any part of the installed assembled pumping unit.
    c. Any lateral rotodynamic frequencies not satisfying the +/- 20 percent margins shall not result in a forced damped response that will allow contact between the shaft and journal bearings.
    d. Historical analysis results for the specified pump model, if matching the proposed pump/motor, can be provided.

6. Torsional rotodynamic analysis results:

    a. Torsional rotodynamic analysis results for specified pump model, performed by Manufacturer, shall provide the first torsional critical speed to demonstrate 20 percent separation above and below specified speed range including vane pass frequency.
    b. Historical analysis results for the specified pump model, if matching the proposed pump/motor, can be provided.
    c. If a design modification (i.e., such as a shaft diameter change or number of impeller vanes) cannot resolve a separation margin deficiency or is not practical, a forced damped response analysis shall be performed to show that infinite life will be achieved with a safety factor of at least two.

7. Campbell diagrams shall be submitted, documenting the test results, rotating component lateral first critical speed, and torsional first critical speed, graphically demonstrating the separation margins specified above.

1.9 DELIVERY, STORAGE AND HANDLING

A. Equipment and parts must be properly protected against any damage during shipment. Store the equipment in accordance with Manufacturer's recommendations.

B. Long Term Storage:

1. Protect parts so that no damage or deterioration will occur during a prolonged delay from the time of fabrication, including storage in accordance with Manufacturer’s requirements, until the unit and equipment are ready for operation.
2. If long-term storage is required on-site, Contractor shall follow Manufacturer's detailed recommendations for long term storage.

C. Factory assembled parts and components shall not be dismantled for shipment unless permission is received in writing from the Engineer.

D. Finished surfaces of all exposed pump openings shall be protected by wooden or equivalent blank flanges, strongly built, and securely bolted thereto or by other approved means.

E. Protect unpainted finished iron or steel surfaces to prevent rust and corrosion.

F. After hydrostatic or other tests, all entrapped water shall be drained prior to shipment and proper care shall be taken to protect parts from the entrance of water during shipment, storage, and handling.

G. Each box or package shall be properly marked to show its net weight in addition to its contents.

H. No shipment shall be made until approved by the Engineer in writing.

1.10 EXISTING CONDITIONS

A. Field Measurements: Verify field measurements prior to fabrication. Indicate field measurements on Shop Drawings.

1.11 WARRANTY

A. Section 017300 - Execution and Section 017700-Closeout Procedures specifies requirements for warranties.

B. In addition, Manufacturer shall warrant the pump/motor for a period of five years from the date of substantial completion.

C. The equipment shall be warranted to be free from defects in workmanship, design and materials. If any part of the equipment should fail during the warranty period, it shall be replaced in the machine(s) and the unit(s) restored to service at no expense to the Owner.

D. The Manufacturer's warranty period shall run concurrently with the Contractor's warranty period. No exception to this provision shall be allowed.

PART 2 - PRODUCTS

2.1 SYSTEM DESCRIPTION

A. D B Wood Lift Station:

1. Construct new station on the site as shown on Drawings.
2. Pump station will generally consist of an influent channel, a rectangular, bifurcated wet well, and above-ground valve header assembly.
3. Station will pump wastewater through a 18-inch (nominal diameter) force main to the existing discharge manhole that ultimately flows offsite to a sanitary sewer collection system constructed by others.
4. Equipment to be furnished under this Section includes three wet-pit solids handling submersible pumps, motors, accessories, and guide rails.

B. Cedar Breaks Lift Station:

1. Construct new station on the site as shown on Drawings.
2. Station will pump wastewater through a 12-inch (nominal diameter) discharge header and tie into a 12-inch force main and gravity sewer collection system to be constructed by others.
3. Equipment to be furnished under this Section includes three wet-pit solids handling submersible pumps, motors, and guide rails.

C. Contractor shall coordinate and be fully responsible for proper operation and compatibility between items in this scope of work and items in Division 40 scope.

D. Pump motors, cables, and appurtenances shall be rated for operation in a Class I Division 1, Group D hazardous environment.

E. Pumping units required under this Section shall be complete including pumps and motors with proper alignment and balancing of the individual units.

1. Design and proportion parts to have liberal strength, stability, and stiffness and to be especially adapted for the work to be done.

2. Ample room shall be provided for inspection, repairs, and adjustments.

F. Each base elbow for each pump shall be designed to be rigidly and accurately anchored into position.

1. Provide necessary anchor bolts, plates, nuts, and washers that conform to recommendations and instructions of the Manufacturer.

G. Stainless steel nameplates giving the name of the manufacturer, the rated flow rate, head, speed, and all other pertinent data shall be permanently attached to each pump and/or motor.

1. Provide additional stainless steel nameplates on enclosures or other above grade location as instructed by Engineer such that the pumps do not need to be removed to gather the information.

H. Pumps shall be totally submersible, solids handling, rotodynamic pumps with submersible close coupled motors designed to pump raw wastewater.

1. Design of the pumps shall be such that the pumping units shall be automatically connected to the discharge piping when lowered into place on the discharge connection, providing a watertight seal.
2. Design pumps to be easily removed from their discharge connections and the wet well for inspection or service.
3. Lifting the pumps from their discharge connections or the wet well shall require neither the removal of any bolts, nuts, or other fastenings nor the need for personnel to enter the pump well.

2.2 CONDITIONS OF OPERATION

A. Manufacturers and Products: Provide one of the following for each station:

1. Cedar Breaks Lift Station:

a. Model EMU FA15.77Z by WILO USA, or approved equal by Xylem (Flygt) or KSB.

2. D B Wood Lift Station:

a. Model EMU FA 15.98D by WILO USA, or approved equal by Xylem (Flygt) or KSB.

3. Pumps within each service type shall be identical in every respect with all parts interchangeable.

B. Each pump shall be designed for the conditions of service tabulated as follows and shall operate within the system head curve envelope as appended.

1. All pumps with specific speed less than 4,500 (US units) shall have a continuously rising (from runout toward shutoff) head performance curve for stable pump operation from the minimum head operating point to the shut-off head.

2. For pumps where specific speed is greater than or equal to 4,500 (US units), the intersection of the pump head and system head curves shall be used to demonstrate stable operation.

C. Pumps shall operate throughout the specified operating range, within the vibration limitations specified in Paragraph 1.8.I above.

D. Each pump shall be designed for the conditions of operation tabulated as follows.
1.

1. Cedar Breaks Lift Station:

Item Description	Design Conditions
Service	Raw Wastewater
Number of Pumps (operating/standby)	3 (2/1)
Maximum Motor Full Load Speed (FLS) (rpm)	1800
Minimum Motor Speed (rpm as percent of FLS)	900
Maximum Allowable Motor Horsepower (non-overloading throughout operating range) (HP)	41.85
Motor Design Voltage/Phase/Frequency	480/3/60
Maximum Anticipated Pumped Fluid Temperature (degrees F.)	104
Minimum Pump Discharge Size (inches)	6
Minimum Base Elbow Discharge Size (inches)	6
Minimum Pump Suction Size (inches)	8
Minimum Pump Shut-Off Head at Motor FLS Acceptable Range (minimum) (feet)	20.17
Minimum Flow Rate at Secondary Operation Point (gpm)	1145
Minimum TH at Secondary Operation Point (feet)	61.38
Minimum Overall Efficiency at Secondary Operation Point (percent)*	65
Maximum NPSH3 at Secondary Operation Point (feet)	4
Intermediate (Design) Point Flow Rate (gpm)	1719
Minimum TH at Intermediate (Design) Point Flow Rate (feet)	71
Minimum Overall Efficiency at Intermediate (Design) Point Flow Rate (percent)*	66
Best Efficiency Point (BEP) Flow Rate Acceptable Range (minimum/maximum) (gpm)	1466
Minimum Overall Efficiency at BEP (percent)*	70.5
BEP Location Relative to Intermediate Design Point	Left
Primary Operation Point TH (feet)	81
Minimum Flow Rate at Primary Operation Point (gpm)	2292
Minimum Overall Efficiency at Primary Operation Point (percent)*	79.50
Maximum NPSHa at Primary Operation Point (feet)	32
Minimum Size Solids Passing (inches)	3
Minimum Submergence Above Pump Casing (feet)/Maximum Duration at Min. Submergence (minutes)	1.0 / 10

2. D B Wood Lift Station:

Item Description	Design Conditions

Service	Raw Wastewater
Number of Pumps (operating/standby/Future)	6 (2/1/3)
Maximum Motor Full Load Speed (FLS) (rpm)	1760
Minimum Motor Speed (rpm as percent of FLS)	Constant speed
Maximum Allowable Motor Horsepower (non-overloading throughout operating range) (HP)	215
Motor Design Voltage/Phase/Frequency	480/3/60
Maximum Anticipated Pumped Fluid Temperature (degrees F.)	104
Minimum Pump Discharge Size (inches)	6
Minimum Base Elbow Discharge Size (inches)	6
Minimum Pump Suction Size (inches)	8
Minimum Pump Shut-Off Head at Motor FLS Acceptable Range (minimum) (feet)	272
Minimum Flow Rate at Secondary Operation Point (gpm)	2750
Minimum TH at Secondary Operation Point (feet)	189.6
Minimum Overall Efficiency at Secondary Operation Point (percent)*	75
Maximum NPSH3 at Secondary Operation Point (feet)	14
Intermediate (Design) Point Flow Rate (gpm)	3400
Minimum TH at Intermediate (Design) Point Flow Rate (feet)	241
Minimum Overall Efficiency at Intermediate (Design) Point Flow Rate (percent)*	65
Best Efficiency Point (BEP) Flow Rate Acceptable Range (minimum/maximum) (gpm)	200/3400
Minimum Overall Efficiency at BEP (percent)*	79.50
BEP Location Relative to Intermediate Design Point	Left
Primary Operation Point TH (feet)	4050
Minimum Flow Rate at Primary Operation Point (gpm)	233
Minimum Overall Efficiency at Primary Operation Point (percent)*	75.4
Maximum NPSHa at Primary Operation Point (feet)	32
Minimum Size Solids Passing (inches)	3
Minimum Submergence Above Pump Casing (feet)/Maximum Duration at Min. Submergence (minutes)	1.0/15

E. Each pumping unit and its driving equipment shall be designed and constructed to withstand the maximum turbine run-away speed of the unit due to back flow through the pump.

2.3 PUMP CONSTRUCTION

A. Overall pump design shall combine high efficiency, low required NPSH3, and the ability to handle high solids concentrations effectively.

1. Impeller/casing design shall result in a passage free of surfaces to which solid or fibrous materials can adhere and shall be capable of passing fibrous and nonwoven materials as found in domestic wastewater.
2. Design shall permit low liquid velocities and gradual acceleration and change of flow direction of the pumped media.

B. All external pump and motor parts shall be of close-grained cast iron, ASTM A48 Class 30 construction.

1. All parts in contact with wastewater shall be protected by corrosion resistant coatings.
2. All external bolts and nuts shall be Type 304 or 316 stainless steel.

C. Impellers shall be constructed of ASTM A532 IIC hardened cast iron. Impellers shall be dynamically balanced as specified below:

1. The impeller shall be a rotodynamic semi-open, solids handling type capable of passing solids either due to internal clearances or other features to facilitate solids processing including a wear plate with groove.
2. As an alternate, the impeller may be a rotodynamic enclosed, solids handling type, capable of passing fibrous material and three-inch (minimum) diameter solids with a Type 316 stainless steel wear ring fitted to the impeller front shroud.
3. The wear plate to impeller clearance shall be easily adjustable without the need for disassembly of the pump or the need to add or remove shims.
4. The impeller may include pump out vanes on the upper shroud to reduce axial thrust and minimize clogging due to debris accumulation around the mechanical seal.
5. The impeller shall be two-plane dynamically balanced in accordance with ISO 1940-1 quality grade G2.5 standard to provide smooth, vibration free operation.

D. Each pump shall be provided with a balanced tandem mechanical shaft seal system.

1. The upper (inner) of the tandem set of seals shall operate in a seal lubricant chamber located just below the stator housing. At a minimum, this set shall contain one stationary silicon carbide and one positively driven rotating silicon carbide and shall function as an independent secondary barrier between the pumped liquid and the stator housing.
2. The lower (outer) of the tandem set of seals shall function as the primary barrier between the pumped liquid and the stator housing. This set shall consist of a stationary ring and a positively driven rotating ring, both of which shall be either tungsten carbide or silicon carbide.
3. Each interface shall be held in contact by its own spring system.
4. The seals shall require neither maintenance or adjustment but shall be easily inspected and replaceable.
5. Seal design shall provide pressure applied to the outside diameter of the face.
6. Shaft seals with conventional double mechanical seals containing either a common single or double spring acting between the upper and lower units are not acceptable nor equal to the dual independent seal specified.

E. The minimum pump discharge size shall be the minimum allowable nominal diameter of the discharge connection provided for attachment to the discharge piping, as shown on the Drawings, except as allowed otherwise by this specification. Unless otherwise noted, the diameter of the opening at the connection between the pump and the discharge connection should normally be the same as the minimum specified discharge size.

F. A sliding guide bracket shall be an integral part of or bolted to the pumping unit.

G. The pump casing shall have a machined connection system to attach to the ASTM A48, Class 35 cast iron discharge connection.

1. The sealing system shall consist of two machined metal-to-metal flanges or flanges with a replaceable rubber seal, form fitted to the machined discharge coupling to ensure and guarantee a positive leak proof system and to provide ease of pump removal.
2. The discharge connection shall be rigidly and accurately anchored to the floor of the wet well, precisely leveled and aligned, so that the completed installation is free from stress or distortion with Type 316 stainless steel sleeve cast-in anchor bolts, Monel nuts and

accessories and so designed as to receive the pump connection without the need of any bolts or nuts.

3. The pump shall be tightly sealed against the discharge connection and shall be accomplished by a simple linear downward motion of the pump with the pumping unit guided by two guide rails as specified below.
4. No portion of the pump shall bear directly on the wet well floor.

H. Dual guide rails shall be of standard weight Type 316 stainless steel pipe, sized per the pump manufacturer.

1. Proper size Type 316 stainless steel rail brackets and hardware shall be provided as recommended by the pump manufacturer.
2. Pump manufacturer shall confirm in writing that no intermediate supports for the guide bars are required or shall provide all necessary intermediate supports in Type 316 stainless steel.

I. Each pump shall be fitted with a Type 316 stainless steel lifting cable and a short piece of suitably sized Type 316 stainless steel chain between the bail and cable.

1. The lifting cable and chain shall be rated for five times the pump weight (minimum).
2. The lifting cable and chain combined length shall be equal to the wet well depth (top slab finished grade to wet well bottom) plus six feet to permit raising the pump for inspection and removal.

J. The lifting cable shall be attached to a lifting bail on the pump. Eyebolts will not be considered as an acceptable alternate to a lifting bail.

K. A proprietary lifting device shall be provided that can be used to lift and lower the pump in one continuous hoisting action. The device should be suitable for mating to the lifting hook of the retrieval device and to the chain attached to the lifting bail of the pump.

2.4 SUBMERSIBLE MOTORS

A. Pump motors shall be inverter duty rated, housed in an air filled, water-tight casing, and shall have Class F or better non-hygroscopic insulated windings which shall be moisture resistant.

1. Oil filled motor housing is not acceptable for motors greater than 15 HP.
2. The motor stator shall be dipped and baked three times in a VPI process and heat shrunk fitted into the stator housing.

   a. As an alternative, trickle impregnation method may be used for motor stator windings.
   b. The use of bolts, pins or other fastening devices requiring penetration of the stator housing is not acceptable.

3. Motors shall be NEMA Design B, equipped with a 1.15 service factor, as defined in the NEMA MG1 standard, based upon the nameplate horsepower rating for across-the-line service.
4. The motor insulation system shall be rated at 155 degrees C or better.

5. Motor shall be capable to operate in an ambient temperature of 40 degrees C continuously with Class B temperature rise.
6. The motor shall be NEMA Starting Code G or H, or better. Motors shall be non-overloading and capable of sustaining a minimum of ten starts per hour.
7. Upper motor bearing shall be insulated.
8. Motors shall be provided with a minimum power factor of 0.80 at full load.
9. The motor efficiency shall comply with the minimum established herein: 90 percent to 95 percent at full load to meet the wire-to-water efficiency specified in Article "Conditions of Operation."

B. Pump motors shall have cooling characteristics suitable to permit continuous operation in a totally unsubmerged condition.

1. Each motor shall incorporate three overheat sensing devices, one in each motor winding.
2. These devices shall trip at 140 degrees C.
3. The sensing devices shall be wired into the pump controls in a manner such that if the device operates, the pump will shut down.
4. The temperature devices shall be self-resetting.

C. The pump motor shall incorporate a closed-loop cooling circuit with an integrated cooling pump rated for continuous duty in a completely dry mode, as well as in a fully submerged condition without damage.

1. The cooling jacket shall be cast iron ASTM A48 class 30 or steel.
2. The coolant pump impeller shall be mounted directly on the motor shaft between the tandem mechanical seals to circulate coolant fluid into the top inter-space between the cooling jacket and motor housing, over the surface of the motor, through ducts in the bearing housing and into a casing heat exchanger.
3. Heat losses from the motor shall be transferred to the fluid pumped in the casing heat exchanger, which forms a structural unit together with the discharge cover of the pump.
4. After passing through the volute-casing heat exchanger, the coolant shall return to the suction side of the internal coolant pump (impeller).
5. Coolant shall be an environmentally safe glycol-based antifreeze, or an environmentally safe food grade oil rated for use down to temperatures of minus 20 degrees C (minus four degrees Fahrenheit).
6. Fans, blowers, or auxiliary cooling systems that are mounted external from the pump motor enclosure are not acceptable.

D. Pump motor shall be non-overloading within the range of operation between shutoff and the low head run-out conditions shown on the pump conditions of operation data table above. For pumps where specific speed is greater than or equal to 4,500, the range from the pump head and system head curves intersection point and low head run out conditions shall be used to demonstrate non-overloading over the range of operating conditions.

E. The pump/motor shaft shall be constructed of Type 420 or Type 431 stainless steel.

1. When operating at the pump design point, the shaft shall have a maximum deflection of 0.2 mm at the lower seal face and a maximum deflection of 0.45 mm at the wear ring area.
2. The shaft shall rotate on permanently lubricated ball bearings properly sized to withstand the axial and radial forces.

a. The ABMA Minimum L-10 bearing life shall be at least 30,000 hours rated at the pump BEP.

F. The pump motor with its appurtenances and cable shall be capable of continuous submergence underwater without loss of watertight integrity to a depth of 30 feet. All mated surfaces shall be machined, fitted with O-rings for watertight sealing.

G. The pumps shall be provided with a cable entry design that shall preclude specific torque requirements to ensure a watertight and submersible seal.

1. The cable entry shall be certified by UL or FM to have passed pull-testing requirements.
2. The cable entry junction chamber and motor shall be separated by a stator lead, sealing gland or terminal board, which shall isolate the motor interior from foreign material gaining access to the pump motor top.
3. The cable entry system shall be field-serviceable.
4. The power and control cable entry into the lead connection chamber may also be epoxy encapsulated for positive moisture sealing.
5. A Buna-N cable grommet shall be provided in addition to the epoxy sealed leads.

H. Cables, Conduits and Accessories:

1. The pumps shall be supplied with power and sensor conductors.
2. Pump motor cables shall be sized to meet applicable NEC requirements.

a. The cable shall consist of a type SPC or SEOW insulated cable with a double jacketed protection system.
b. The cable shall have a neoprene or chlorinated polyethylene outside and synthetic rubber inside, and shall exceed industry standards for oil, gas, and sewage resistance.
c. Individual conductors shall be of type RUW.
d. Pump cables shall be provided of sufficient length so that the cables will be continuous between the pump and the terminal cabinet with no splices being allowed.

3. If more than one cable is being provided per pump, the Contractor shall furnish and provide for the installation of the additional conduits, etc. as required for each additional cable. Only one cable per conduit will be allowed at the lift station. Conduit sized per manufacturers recommendations but not smaller than 3/4-inch.
4. Contractor shall furnish all required stainless steel conduit hardware and fittings.
5. Watertight connectors shall be equal to Crouse-Hinds Type "CGB", with neoprene lands shall be furnished with and installed in the control panel enclosure or disconnect to terminate each conduit and seal each cable entry.
6. Conduit seals shall be equal to Crouse-Hinds Type "EYS".
7. Coordinate the installation of the above materials with the Manufacturer.

2.5 PUMP/MOTOR PROTECTION SYSTEM

A. Provide a pump/motor protection relay module for each pump to monitor temperature and moisture.

1. The system shall provide warning and shutdown protection and shall be UL listed.
2. All of the pump/motor unit protective and monitoring sensors shall be connected to a relay module which will send a signal from the pump/motor sensors to the control panel.
3. Modules shall be as manufactured by Wilo or Engineer-approved equal.

B. Each pump/motor unit(s) shall be equipped with the following protection and monitoring sensors:

1. Three motor winding bi-metallic thermal switches or thermistors, one installed in each motor stator phase winding, and connected in series to monitor and protect the winding from over temperature operation. The thermal switches shall open, activating an alarm and stopping the motor should a high temperature event occur.
2. Two leakage sensors shall be provided to detect water intrusion into the stator chamber and junction chamber. A Float Leakage Sensor (FLS), a small float switch, shall be used to detect the presence of water in either the stator chamber or junction chamber. When activated, the FLS will stop the motor and activate an alarm. Use of a voltage sensitive solid- state sensors shall not be acceptable.

C. The pump/motor protective relay module shall be located within the Pump Station Control Panel.

2.6 SHOP PAINTING AND ACCESSORIES

A. Each pump and associated equipment shall be shop-primed and finished-coated in accordance with the Manufacturer's standard practice prior to shipment.

1. Color shall be Manufacturer’s standard.
2. Adequate supply of touch-up paint shall be supplied by the Manufacturer.

B. All interior and exterior surfaces of pumps and of motor enclosure shall be thoroughly cleaned, dry and free of all rust, mill scale, grease, dirt, other foreign matter and supplied with Manufacturer’s standard epoxy coatings.

C. All nameplates shall be properly protected during painting.

D. The pumping station shall be furnished with the necessary, non-sparking stainless steel upper guide holder and level sensor cable holder.

E. Lower guide holders shall be integral with the discharge connection. Dual guide rails shall be of Schedule 40, welded two-inch minimum diameter, Type 316 stainless steel pipe of the length required by the Drawings. Single guide rails and guide cables are not acceptable.

F. Stainless steel cable holders including the cable hooks shall be fabricated from Type 316 stainless steel plate. Sharp corners and edges shall be ground smooth to prevent abrasion and cutting of electrical cable insulation. The cable holder shall be of sufficient length and strength to provide support for each separate cable, except that the pump power and lift cables may use the same hook position, provided the cables do not foul one another and the lift cable is easily accessed from the hatch opening.

G. Provide a chain and latch device to facilitate pump removal from wet well without a series of incremental lifts. Device shall be designed to be lowered along the guide rails and shall be remotely latched to pump lifting bail without requiring wet well entry.

PART 3 - EXECUTION

3.1 PREPARATION

A. Take all necessary measurements in the field to determine the exact dimensions for all work and the required sizes of all equipment under this Contract.

B. All pertinent data and dimensions shall be verified.

3.2 INSTALLATION

A. Installation shall be in strict accordance with the Manufacturer's instructions and recommendations in the locations shown on Drawings.

1. Furnish all required oil and grease for initial operation, if required, in accordance with the Manufacturer's recommendations.
2. Anchor bolts shall be set in accordance with the Manufacturer's recommendations.

B. Upon completion of each pump application, the Manufacturer shall inspect the installation and submit a certificate stating that the installation of the equipment meeting Manufacturer's installation, operation and maintenance manuals is satisfactory, that the equipment is ready for operation, and that the operating personnel have been suitably instructed in the operation, lubrication, and care of each unit.

C. If Contractor does not provide qualified installation staff on the job during the pump installation, Engineer may direct Contractor to provide the services of a Manufacturer's factory representative to give the necessary instructions to ensure a proper installation.

3.3 INSPECTION AND TESTING

A. General:

1. Engineer shall have the right to inspect any equipment to be furnished under this Section prior to their shipment from place of manufacture and shall witness the factory pump performance test.
2. Engineer shall be notified in writing no fewer than ten working days prior to the factory pump performance test, so that arrangements can be made for inspection by Engineer.
3. Field tests shall not be conducted until such time that the pumping system, including controls, is complete and ready for testing.

B. Factory Pump Testing:

1. Each pump shall be factory tested within the United States and as described in ANSI/HI 14.6, American National Standard for Rotodynamic Submersible Pumps for Hydraulic Performance Acceptance Tests, as specified herein.
2. Manufacturer shall perform hydrostatic test on the pressure-containing components in accordance with ANSI/HI 14.6. Test shall be conducted on each pump prior to shipment.
3. Cast surfaces of all components shall be examined by visual inspection per MSS SP-55.
4. Factory pump tests shall be the basis of acceptance of the hydraulic performance of the pumps.

    a. Manufacturer shall factory test all pumps prior to shipment in accordance with the Hydraulic Institute standards.
    b. Flow rate, total head, overall efficiency, and input KW shall be tested and recorded for at least five points on the pump performance curve.
    c. Test shall be performed to demonstrate that the pumps meet ANSI/HI 14.6, acceptance grade 1U for specified (intermediate) design point and acceptance grade 1E for the other specified points.
    d. The five points shall include the points specified in Article 2.2.
    e. If any pump tested fails to meet any specification requirement it shall be modified until it meets all specification requirements.
    f. If any pump tested fails to meet the flow rate, head, or overall efficiency requirements for any of the conditions listed in Article 2.2 of this specification and all reasonable attempts to correct the inefficiency are unsuccessful, the pump(s) shall be replaced with a unit(s) that meets the specified requirements.

5. Submit certified pump performance curves, including total head, flow rate, overall efficiency and total brake horsepower for each pump supplied. Test data shall be submitted for approval by the Engineer prior to shipment.
6. If the Manufacturer does not have historical test records for NPSH3 at the specified design pump speed, one pump shall be tested to demonstrate NPSH3 versus flow rate.
7. All meters, gauges, and other test instruments shall be calibrated within the manufacturer's established period prior to the scheduled test and certified calibration data shall be provided.

    a. If the Manufacturer has no ISO standard calibration period, Hydraulic Institute Standards shall govern.

8. The pumps shall be tested at 100 percent of the design speed. Reduced speed curves will be determined using affinity laws.
9. Each pump shall be tested through the specified range of flow, and head/flow rate/ efficiency curves plotted at maximum output speed.

    a. During each test, the pump shall be run at each head condition for sufficient time to accurately determine flow rate, head, power input, and efficiency.
    b. The overall efficiency shall be determined at each test point.
    c. The pump under test shall be modified until the specified conditions are met or replaced with a pump that will meet the specified conditions.

10. Manufacturer shall perform the following test on each pump prior to shipment from factory:

    a. Megger motor and pump for insulation breaks or moisture.

b. Prior to submergence, the pump shall be run dry and checked for correct rotation.
c. Pump shall be run for a minimum of 30 minutes in a submerged condition.
d. The pump shall be removed from test tank, meggered immediately for moisture and upper and lower seal unit shall be checked for water intrusion.
e. A written certification test report regarding the above tests shall be submitted for approval prior to shipment.

C. Field Pump Test:

1. Manufacturer shall furnish the services of a representative who shall have complete knowledge of proper operation and maintenance to inspect the final installation and supervise the test run of the equipment.

   a. Manufacturer shall include in his price a minimum of eight hours of a representative's time for field testing.

2. Written test procedures shall be submitted to the Engineer for approval 30 days prior to testing.
3. Furnish water, power, facilities, labor, materials, supplies, and test instruments required to conduct the field testing.
4. The Final Acceptance Test shall demonstrate that all items of these Specifications have been met by the equipment as installed and shall include, but not be limited to, the following tests:

   a. That the quick release lift-out feature functions properly and allows the pump to be raised and lowered without draining the wet well.
   b. That all units have been properly installed and are in correct alignment.
   c. Check for correct lubrication in accordance with manufacturer's instructions.
   d. Check direction of rotation of all motors and reverse connections, if necessary.
   e. That the units operate without overheating or overloading any parts and without objectionable vibration.
   f. That there are no mechanical defects in any of the parts.
   g. That the pumps can deliver the specified total head and flow rate to demonstrate that the pumps generally meet the requirements specified (factory performance test is the basis of pump acceptance).
   h. That the pump sensors and controls perform satisfactorily as to sequence control and proper alarm functions.

5. If the pump performance does not meet the specifications, corrective measures shall be taken, or pumps shall be removed and replaced with pumps which satisfy the conditions specified.
6. A five-day continuous operating period of the pumps will be required before acceptance. If pumping system fails during the test period, the test shall be restarted (including reset of time to zero) after repair (or replacement) has been completed.

D. Field Vibration Testing:

1. After installation and as soon as conditions permit full speed operation, the Contractor shall retain the services of a fully qualified independent mechanical vibration testing and analysis firm:

a. Mechanical Solutions Inc. (MSI) Whippany, NJ.
b. Engineering Dynamics Inc. (EDI) San Antonio, TX.
c. Engineer-approved equal.

2. Testing and analysis firm perform a detailed vibration signature analysis of each unit(s) in accordance with ANSI/HI 9.6.4, including both "Bump Tests" and X-Y vibration profiles, to:

   a. Demonstrate compliance with the specified vibration limitations.
   b. Demonstrate there are no field installed resonant conditions due to misalignment, the foundation, or the connecting piping and its supports, when operating at any speed within the specified operating range.

3. Testing shall occur at the design full speed, design minimum speed, and at a maximum of 3 Hz increments between minimum and full speed.
4. A written report shall be submitted including a detailed schematic drawing of the units indicating thereon where and in which direction the vibration readings were taken and recorded showing:

   a. Peak-to-peak displacement, in mils.
   b. Frequency spectrum.
   c. Peak velocity level, in inches per second.
   d. Velocity level, in inches per second RMS.

5. The report shall contain a complete analysis of their findings, describing any problem encountered, if any, probable cause, and specific recommendations for any required corrective action.

   a. When system is furnished with vibration and temperature monitoring system, the motor vibration sensor may be used for acceptance testing. Alternatively, temporary surface mounted sensor mounted in the vicinity of the installed sensor are preferred to additionally establish the accuracy of the permanently installed system.

6. If required, take corrective action and have the units retested to ensure full compliance with the specified requirements. All costs associated with the field tests or any required corrective action shall be borne by Contractor.

3.4 MANUFACTURER SERVICES INCLUDING OPERATING INSTRUCTIONS

A. Installation Inspection and Startup:

1. Include in bid price the services of a Manufacturer’s factory representative who has complete knowledge of proper operation and maintenance to instruct representatives of Owner and Engineer on proper operation and maintenance.

   a. This work may be conducted in conjunction with the inspection of the installation and start-up.
   b. If there are difficulties in operation of the equipment because of the Manufacturer's design or fabrication, additional service shall be provided at no additional cost to Owner.

c. The listed service requirements are exclusive of travel time and shall not limit or relieve Contractor of the obligation to provide sufficient service necessary to place the equipment in satisfactory and functioning condition.

2. Installation Inspection:

a. Provide written certification that the installation is complete and operable in all respects, and that no conditions exist which may affect the warranty.
b. Supply the installation inspection services of an experienced Manufacturer's factory representative to verify the proper pump installation.
c. The Manufacturer's factory representative shall specifically approve the installation and alignment of the pump with the motor, the grouting, and the alignment of the connecting piping and the installation of the field installed packing or mechanical seal.
d. If there are difficulties in the start-up or operation of the equipment due to the Manufacturer's design or fabrication, additional service shall be provided at no additional cost to Owner.
e. Minimum time on-site shall be one 8-hour day per station.

3. Start-Up:

a. Provide written report, summarizing test procedures, tested and measured variables (flow rates, total heads, shaft-speed, vibration measurements, etc.):
b. Minimum time on-site shall be one 8-hour day per station.

B. Training:

1. Field and classroom instruction on operation and maintenance of the equipment, including start-up, shut-down troubleshooting, lubrication, maintenance, and safety.
2. Manufacturer shall provide detailed manuals to supplement the training courses. The manuals shall include specific details of equipment supplied and operations specific to the project.
3. Manufacturer shall make use of teaching aids, manuals, slide/video presentations, etc. After the training services, such materials shall be delivered to Owner.

a. Minimum time on-site shall be one 8-hour day per station.

C. Contractor alone shall be responsible for requesting these services and shall coordinate these requests with all other relevant trades, to ensure the effectiveness of the Manufacturers' service. If the lack of coordination by Contractor results in the need to recall the Manufacturer's factory representative, the lost time shall not be counted against the above days.

END OF SECTION 432513.11

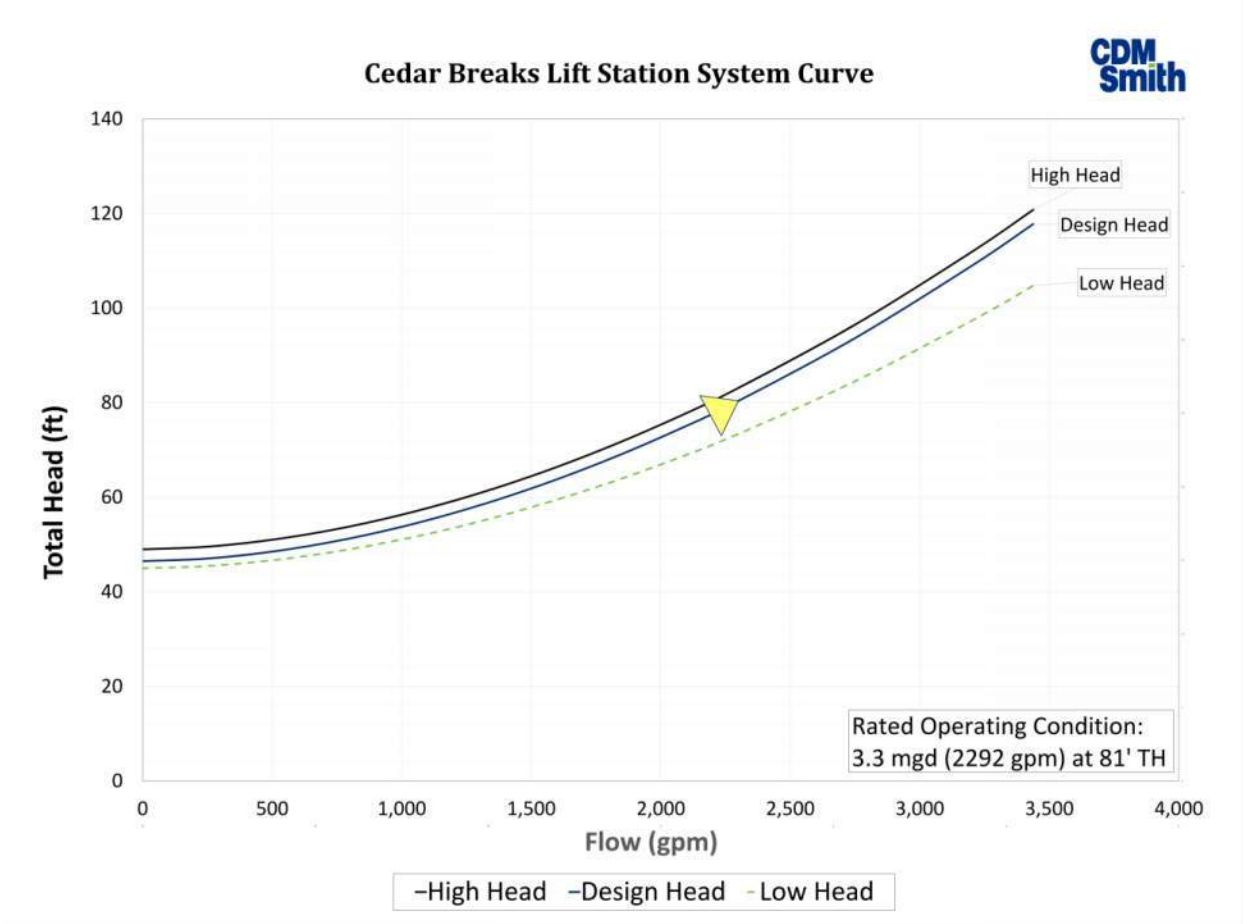
Cedar Breaks Lift Station System Curve
CDM Smith
Total Head (ft)
140
120
100
80
60
40
20
0
0
500
1,000
1,500
2,000
2,500
3,000
3,500
4,000
Flow (gpm)
High Head
Design Head
Low Head
Rated Operating Condition:
3.3 mgd (2292 gpm) at 81' TH
High Head
Design Head
Low Head

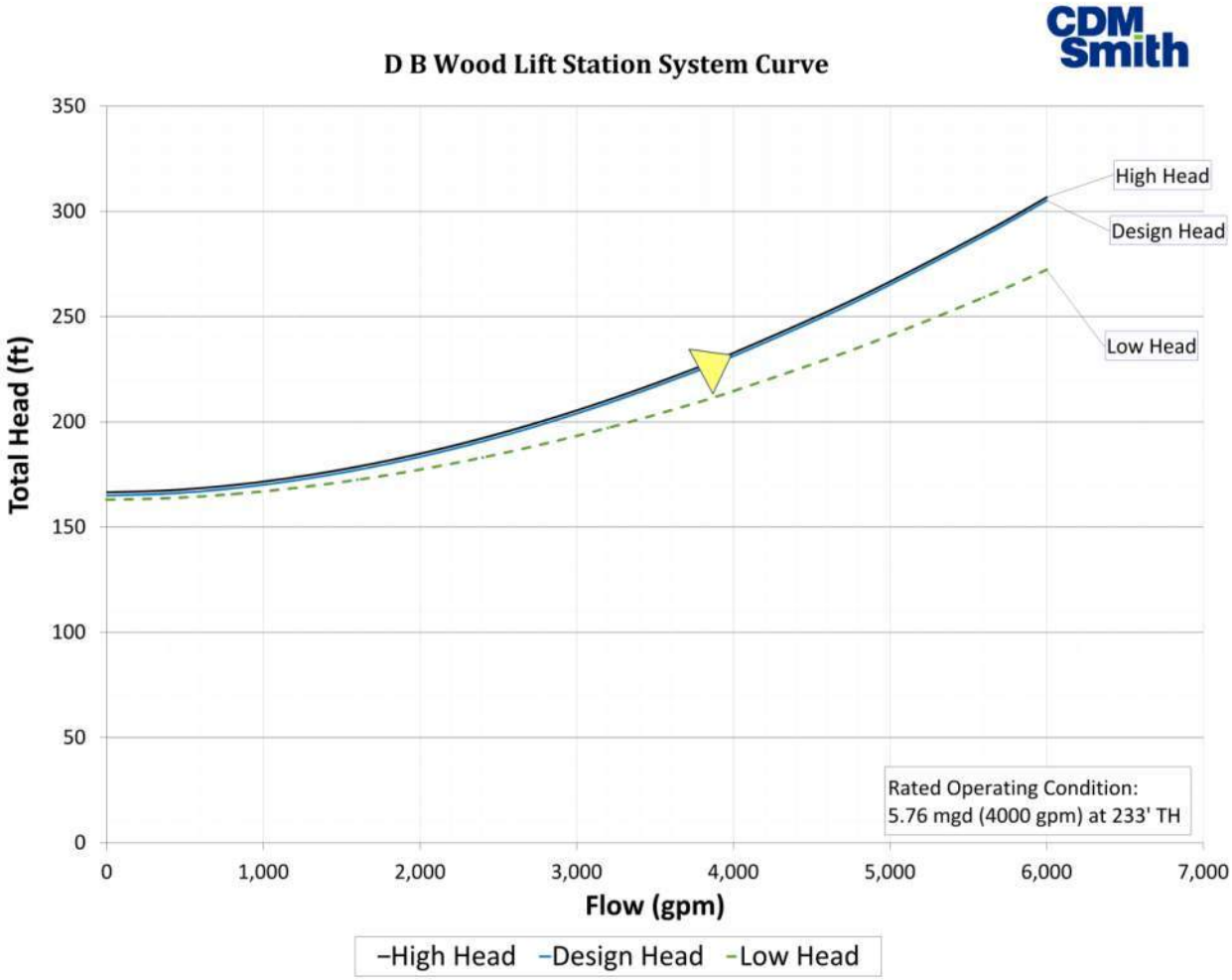
D B Wood Lift Station System Curve
Total Head (ft)
350
300
250
200
150
100
50
0
0
1,000
2,000
3,000
4,000
5,000
6,000
7,000
Flow (gpm)
High Head
Design Head
Low Head
Rated Operating Condition:
5.76 mgd (4000 gpm) at 233' TH
High Head
Design Head
Low Head

APPENDIX

XYLEM BYPASS PUMPS QUOTE

THIS PAGE INTENTIONALLY LEFT BLANK.

4965 Eisenhaur Road
Suite 102
Windcrest, TX 78218
Tel: 210-648-9101
Fax: 210-648-9102
www.godwinpumps.com

December 8, 2023

Allen Brantley
City of Georgetown
300-1 Industrial Ave
Georgetown, TX 78626-8445

Phone: 512-930-3647
Email: allen.brantley@georgetown.org

RE: CD150/CD225 buy board sale
Sale Quotation 115027859

Dear Allen:

Xylem is pleased to provide the following Buy board sale quotation 672-22 for your review.

Confidentiality:
The reader acknowledges that the information provided by Xylem Dewatering Solutions, Inc. is confidential; therefore, reader agrees not to disclose it without the express written permission of Xylem Dewatering Solutions, Inc. in all cases. It is acknowledged by reader, that information is in all respects confidential in nature, other than information which is in the public domain through other means and that any disclosure or use of same by the reader may cause serious harm or damage to Xylem Dewatering Solutions, Inc.

Thank you again for your interest in Xylem products and the services we provide. We appreciate the opportunity to be of service, and look forward to working with you. If you have any questions or concerns, please contact our local office at 210-648-9101 or you may contact me directly at 210-584-9779 or Garrett.Culwell@xylem.com.

Sincerely,

Garrett Culwell
Outside Sales Representative

GC / pr

4965 Eisenhaur Road
Suite 102
Windcrest, TX 78218
Tel: 210-648-9101

SALE QUOTATION

ITEM	QTY	DESCRIPTION	UNIT PRICE	SALE TOTAL
		Open Market Items:		
A	1	Dri-Prime CD150S Diesel Pump • 6" 150# Flange Suction and Discharge • Isuzu 4LE2X FT4 Diesel Engine • with Field Smart Technology • Road Going Trailer,ElecBrakes- 3" Pintle • Lights - DOT Standard	$ 45,257.25	$ 45,257.25
		***With purchase of above pump(s), Xylem recommends purchasing the PM Service item(s) listed below:**		
	1	PPGODWINPMA00 Single Annual Visit Prepaid Bronze PMA	800.00	800.00
	1	KTCD150ARS25 CD150S 1-2 yr Recommended Spares Kit	1,498.00	1,498.00
B	1	Dri-Prime CD225M Diesel Pump • 8" 150# Flange Suction and Discharge • JCB TCAE-93 FT4 Diesel Engine • Includes PrimeGuard Engine Controller • Hwy Trailer, Elec Brakes, DOT Lights	70,800.00	70,800.00
		***With purchase of above pump(s), Xylem recommends purchasing the PM Service item(s) listed below:**		
	1	PPGODWINPMA00 Single Annual Visit Prepaid Bronze PMA	800.00	800.00
	1	KTCD225MRS30 CD225M Diesel 1-2 yr Spares Kit	1,597.00	1,597.00
C	4	6" x 20' Black Water Suction Hose with Godwin QD Fittings	566.50	2,266.00
D	4	8" x 20' Black Water Suction Hose with Godwin QD Fittings	1,152.75	4,611.00

THE PRICE PROVIDED IS BASED UPON XYLEM'S REVIEW OF THE APPLICABLE PLAN DRAWINGS AND RELEVANT TECHNICAL SPECIFICATION SECTIONS BEARING ON THE EQUIPMENT DESCRIBED IN THIS QUOTATION. SUBMISSION OF THIS QUOTATION SHOULD NOT BE MISCONSTRUED AS XYLEM'S ACCEPTANCE OF ANY OTHER PROVISIONS OF THE PRIME CONTRACT BETWEEN CONTRACTOR AND PROJECT OWNER (HOWSOEVER REFERENCED) AND ATTEMPTS IN ANY SUBSEQUENT SUBCONTRACT TO BIND XYLEM TO SUCH OWNER DOCUMENTS ARE HEREBY REJECTED AND SHALL BE OF NO FORCE AND EFFECT, IRRESPECTIVE OF ANYTHING STATED ELSEWHERE TO THE CONTRARY.

Please note all sale pricing is in U.S. Dollars. The price does not include freight, export boxing, duties, taxes, or any other items not specifically mentioned.

This pricing information is for internal use only. We ask that these items and terms be kept confidential. All applicable tax and freight charges will be added to invoices. All quotations are subject to credit approval. All quotations are valid for 30 days. All prices quoted in US dollars.

This order is subject to the Standard Terms and Conditions of Sale - Xylem Americas effective on the date the order is accepted which terms are available at https://www.xylem.com/en-US/support/xylem-americas-standard-terms-and-conditions/ and incorporated herein by reference and made a part of the agreement between the parties.

4965 Eisenhaur Road
Suite 102
Windcrest, TX 78218
Tel: 210-648-9101

xylem Let's Solve Water
godwin FLYGT

SALE QUOTATION

ITEM	QTY	DESCRIPTION	UNIT PRICE	SALE TOTAL
E	1	Inbound Freight Delivery Br 015	3,000.00	3,000.00

Our current delivery lead-times associated with this Quotation are best estimates at this time. Due to the outbreak of the COVID-19 virus pandemic and its global effects on commerce, supply chain, and logistics, these lead-times are an estimate only and not a commitment. Xylem is and will continue to use all commercially reasonable efforts to minimize any delivery delay impacts.

A signed copy of this Quotation is acceptable as a binding contract.

	Name:
Signature:	**(PLEASE PRINT)**
Company/Utility:	**Reference #:**
Address:	**Date:**
	Phone:
	Email:
	Fax:

Net Sale Total with Recommended PM Service Kits	$ 130,629.25
NET SALE TOTAL	**$ 125,934.25**

THE PRICE PROVIDED IS BASED UPON XYLEM'S REVIEW OF THE APPLICABLE PLAN DRAWINGS AND RELEVANT TECHNICAL SPECIFICATION SECTIONS BEARING ON THE EQUIPMENT DESCRIBED IN THIS QUOTATION. SUBMISSION OF THIS QUOTATION SHOULD NOT BE MISCONSTRUED AS XYLEM'S ACCEPTANCE OF ANY OTHER PROVISIONS OF THE PRIME CONTRACT BETWEEN CONTRACTOR AND PROJECT OWNER (HOWSOEVER REFERENCED) AND ATTEMPTS IN ANY SUBSEQUENT SUBCONTRACT TO BIND XYLEM TO SUCH OWNER DOCUMENTS ARE HEREBY REJECTED AND SHALL BE OF NO FORCE AND EFFECT, IRRESPECTIVE OF ANYTHING STATED ELSEWHERE TO THE CONTRARY.

Please note all sale pricing is in U.S. Dollars. The price does not include freight, export boxing, duties, taxes, or any other items not specifically mentioned.

This pricing information is for internal use only. We ask that these items and terms be kept confidential. All applicable tax and freight charges will be added to invoices. All quotations are subject to credit approval. All quotations are valid for 30 days. All prices quoted in US dollars.

This order is subject to the Standard Terms and Conditions of Sale - Xylem Americas effective on the date the order is accepted which terms are available at https://www.xylem.com/en-US/support/xylem-americas-standard-terms-and-conditions/ and incorporated herein by reference and made a part of the agreement between the parties.

CD225M Dri-Prime® Pump

The Godwin Dri-Prime CD225M pump offers flow rates to 3240 USGPM and has the capability of handling solids up to 3.0" in diameter.

The CD225M is able to automatically prime to 28' of suction lift from dry. Automatic or manual starting/stopping available through integral mounted control panel or optional wireless-remote access.

Indefinite dry-running is no problem due to the unique Godwin liquid bath mechanical seal design. Solids handling, dry-running, and portability make the CD225M the perfect choice for dewatering and bypass applications.

Features and Benefits

- Simple maintenance normally limited to checking fluid levels and filters.
- Dri-Prime (continuously operated Venturi air ejector priming device) requiring no periodic adjustment. Optional compressor clutch available.
- Extensive application flexibility handling sewage, slurries, and liquids with solids up to 3.0" in diameter.
- Dry-running high pressure liquid bath mechanical seal with high abrasion resistant solid silicon carbide faces.
- Close-coupled centrifugal pump with Dri-Prime system coupled to a diesel engine or electric motor.
- All cast iron construction (stainless steel construction option available) with cast steel impeller.
- Also available in a critically silenced unit which reduces noise levels to less than 70 dBA at 30'.
- Standard engine John Deere 4045TF285 (T3 Flex). Also available with John Deere 4045HFC92 (IT4).

Specifications

Suction connection	8" 150# ANSI B16.5
Delivery connection	8" 150# ANSI B16.5
Max capacity	3240 USGPM †
Max solids handling	3.0"
Max impeller diameter	11.4"
Max operating temp	176°F*
Max pressure	73 psi
Max suction pressure	73 psi
Max casing pressure	110 psi
Max operating speed	2200 rpm

* Please contact our office for applications in excess of 176°F.

† Larger diameter pipes may be required for maximum flows.

Please contact the factory or office for further details. A typical picture of the pump is shown.
All information is approximate and for general guidance only.

godwin
a xylem brand

Performance Curve

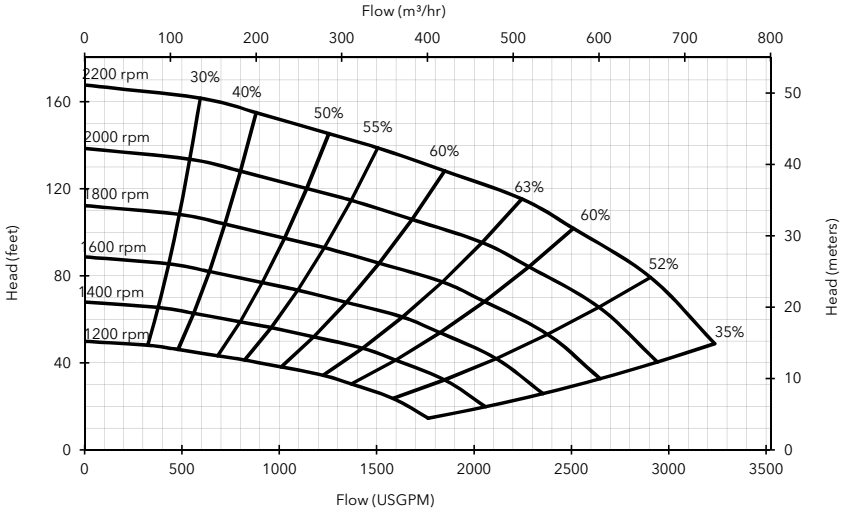

Materials

Pump casing & suction cover	Cast iron BS EN 1561 - 1997
Wearplates	High Chromium Cast Iron HC403:1977
Pump Shaft	Carbon steel BS 970 - 1991 817M40T
Impeller	Cast Steel BS3100 A5 Hardness to 200 HB Brinell
Non-return valve body	Cast iron BS EN 1561 - 1997
Mechanical seal	Silicon carbide face; Viton elastomers; Stainless steel body

Engine option 1

John Deere 4045TF285 (T3 Flex), 99 HP @ 2200 rpm

Impeller diameter 11.4"

Pump speed 2200 rpm

Suction Lift Table

Total Suction Head (feet)	Total Delivery Head (feet)				
	42	70	101	121	137
	Output (USGPM)				
10	3148	2906	2325	-	-
15	2906	2543	2058	1695	-
20	1695	1695	1695	1453	-
25	1211	1211	1211	969	387

Fuel capacity: 100 US Gal

Max Fuel consumption @ 2200 rpm: 5.8 US Gal/hr

Max Fuel consumption @ 1800 rpm: 5.0 US Gal/hr

Weight (Dry): 4,440 lbs

Weight (Wet): 5,160 lbs

Dim.: (L) 155" x (W) 76" x (H) 93"

Performance data provided in tables is based on water tests at sea level and 20°C ambient. All information is approximate and for general guidance only. Please contact the factory or office for further details.

Engine option 2

John Deere 4045HFC92 (IT4), 99 HP @ 2200 rpm

Impeller diameter 11.4"

Pump speed 2200 rpm

Suction Lift Table

Total Suction Head (feet)	Total Delivery Head (feet)				
	42	70	101	121	137
	Output (USGPM)				
10	3148	2906	2325	-	-
15	2906	2543	2058	1695	-
20	1695	1695	1695	1453	-
25	1211	1211	1211	969	387

Fuel capacity: 100 US Gal

Max Fuel consumption @ 2200 rpm: 5.4 US Gal/hr

Max Fuel consumption @ 1800 rpm: 4.8 US Gal/hr

Weight (Dry): 4,680 lbs

Weight (Wet): 5,400 lbs

Dim.: (L) 155" x (W) 76" x (H) 93"

Performance data provided in tables is based on water tests at sea level and 20°C ambient. All information is approximate and for general guidance only. Please contact the factory or office for further details.

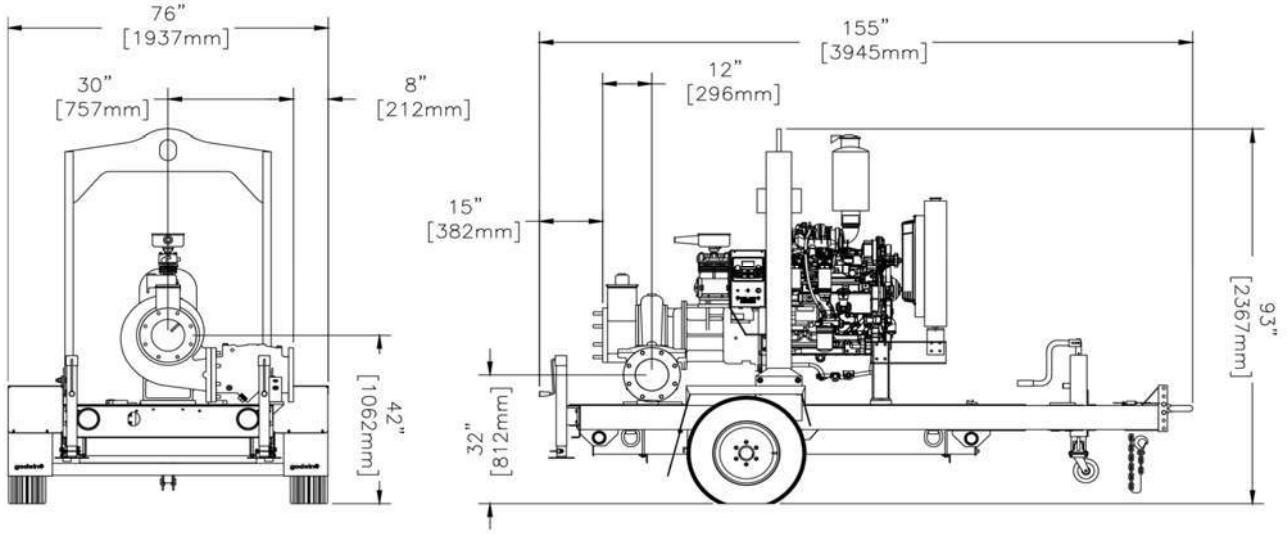

xylem
Let's Solve Water

84 Floodgate Road
Bridgeport, NJ 08014 USA
(856) 467-3636 . Fax (856) 467-4841
Email: sales@godwinpumps.com

Reference number : 95-1015-3000
Date of issue : February 26, 2014
Issue : 5

www.godwinpumps.com

© 2014 Xylem, Inc. All rights reserved. Godwin is a trademark of Xylem Dewatering Solutions, Inc., a wholly-owned subsidiary of Xylem Inc. Specifications and illustrations are subject to revision without notice. Xylem makes no representation regarding the completeness or accuracy of this information and is not liable for any direct or indirect damages arising from or relating to this information or its use.

xylem
Let's Solve Water

Godwin SD150M Dri-Prime® Pump

The Godwin SD150M Dri-Prime pump is a versatile, general purpose dewatering pump designed for use in the industry's most challenging construction, municipal, industrial and emergency response applications. This rugged pump is ideally suited for tough dewatering jobs, and is the reliable choice for portable and permanent solutions.

The SD150M is a member of the Godwin Standard Dewatering Series - the same Godwin quality at an affordable price. The SD150M has been engineered to meet your standard dewatering needs with mechanical efficiencies and durability. Ready to go at a moments notice with the iconic Godwin Dri-Prime and dry-running oil bath mechanical seal. The SD150M can be deployed in your toughest applications on an as needed basis.

Specifications

Suction connection	6 in (150 mm) flange
Delivery connection	6 in (150 mm) flange
Max capacity	2135 USGPM (485 m^3/hr)[1]
Max impeller diameter	10.2 in (260 mm)
Max solids handling	3 in (75 mm)
Max operating temperature	176°F (80°C)[2]
Max pressure	64 psi (4.4 bar)
Max suction pressure	58 psi (4.0 bar)
Max casing pressure	138 psi (9.5 bar)
Max operating speed	2200 rpm

1 Larger diameter pipes may be required for maximum flows.
2 Please contact our sales and product support for applications in excess of 80°C (176°F).

Features and benefits

- Simple maintenance normally limited to checking fluid levels and filters.
- Godwin Dri-Prime is a continuously operated venturi air ejector priming device which requires no periodic adjustment or control.
- Extensive application flexibility. It will handle sewage, slurries and liquids with solids up to 3 in (75 mm) in diameter.
- Dry-running high pressure oil bath mechanical seal, with high abrasion resistant silicon carbide faces.
- A close-coupled centrifugal pump with Godwin Dri-Prime system mounted to a diesel engine or electric drive.
- All cast iron construction with cast steel impeller.
- Also available in a sound attenuated unit which reduces noise levels down to 70 dBA at 30'.
- Standard engine Isuzu 4LE2T (FT4) 48HP.

godwin
a xylem brand

Godwin SD150M Dri-Prime® Pump

Suction lift table 1800 rpm

Performance data provided in tables is based on water tests at sea level and 68°F (20 °C) ambient.

Total suction head (ft)	Total delivery head (ft)				
	17	26	37	48	71
	Output (USGPM)				
10	1689	1650	1614	1464	1050
15	1593	1500	1407	1218	900
20	1125	1125	1125	1032	657
25	975	939	864	750	375

Performance curve

Pump curve is based on 0 ft (0 m) dynamic suction lift.

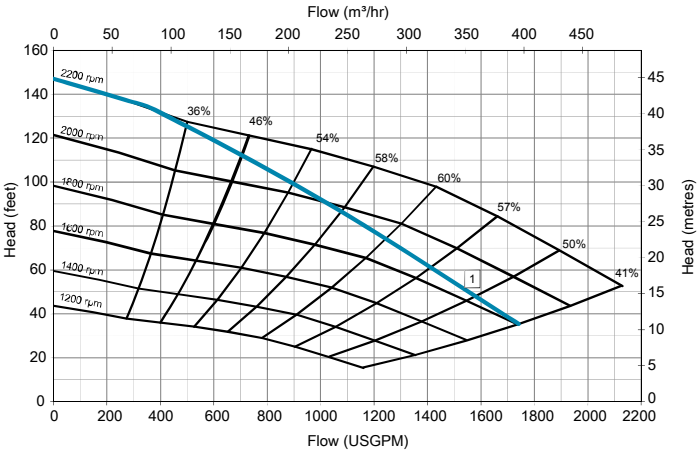

Materials

Pump casing	Cast iron BS EN 1561 - 1997
Pump shaft	Carbon steel BS970:1991 817M40T
Impeller	Cast Steel BS3100 A5 Hardness to 200 HB Brinell
Mechanical seal faces	Silicon carbide face; Viton elastomers; Stainless steel body

Driver options

Option	Driver	Power hp (kW)	Energy Use 1800 rpm	Emissions Rating
1	Isuzu 4LE2T	48.3 (36)	2.6 US Gal/hr	EPA FT4

Open skidbase trailer mounted

Fuel capacity	60 US Gal (227 L)
Weight dry	2,655 lb (1,204 kg)
Weight wet	3,090 lb (1,402 kg)
Dimensions (L x W x H)	119 in x 66 in x 87 in (3,023 mm x 1,676 mm x 2,210 mm)

Sound attenuated enclosure

Noise @ 7 m (23 ft)	66 dBA
Fuel capacity	80 US Gal (303 L)
Weight dry	3,005 lb (1,363 kg)
Weight wet	3,585 lb (1,626 kg)
Dimensions (L x W x H)	101 in x 43 in x 70 in (2,565 mm x 1,092 mm x 1,778 mm)

xylem
Let's Solve Water

www.xylem.com/godwin

Specifications and illustrations are subject to revision without notice. Xylem makes no representation regarding the completeness or accuracy of this information and is not liable for any direct or indirect damages arising from or relating to this information or its use.

© 2020 Xylem Inc. All rights reserved. Godwin is a trademark of Xylem Dewatering Solutions, Inc., a wholly-owned subsidiary of Xylem Inc.

95-35307-3000_1.0

Temporary Stormwater Section

Texas Commission on Environmental Quality

for Regulated Activities on the Edwards Aquifer Recharge Zone and Relating to 30 TAC §213.5(b)(4)(A), (B), (D)(I) and (G); Effective June 1, 1999

To ensure that the application is administratively complete, confirm that all fields in the form are complete, verify that all requested information is provided, consistently reference the same site and contact person in all forms in the application, and ensure forms are signed by the appropriate party.

Note: Including all the information requested in the form and attachments contributes to more streamlined technical reviews.

Signature

To the best of my knowledge, the responses to this form accurately reflect all information requested concerning the proposed regulated activities and methods to protect the Edwards Aquifer. This **Temporary Stormwater Section** is hereby submitted for TCEQ review and executive director approval. The application was prepared by:

Print Name of Customer/Agent: Gerald S. Furrier

Date: 06/13/24

Signature of Customer/Agent:

Regulated Entity Name: South Lake to South Fork Wastewater Improvements

Project Information

Potential Sources of Contamination

Examples: Fuel storage and use, chemical storage and use, use of asphaltic products, construction vehicles tracking onto public roads, and existing solid waste.

1. Fuels for construction equipment and hazardous substances which will be used during construction:

   ☐ The following fuels and/or hazardous substances will be stored on the site: _____

   These fuels and/or hazardous substances will be stored in:

   ☐ Aboveground storage tanks with a cumulative storage capacity of less than 250 gallons will be stored on the site for less than one (1) year.

- ☐ Aboveground storage tanks with a cumulative storage capacity between 250 gallons and 499 gallons will be stored on the site for less than one (1) year.
- ☐ Aboveground storage tanks with a cumulative storage capacity of 500 gallons or more will be stored on the site. An Aboveground Storage Tank Facility Plan application must be submitted to the appropriate regional office of the TCEQ prior to moving the tanks onto the project.

☒ Fuels and hazardous substances will not be stored on the site.

2. ☒ **Attachment A - Spill Response Actions**. A site specific description of the measures to be taken to contain any spill of hydrocarbons or hazardous substances is attached.
3. ☒ Temporary aboveground storage tank systems of 250 gallons or more cumulative storage capacity must be located a minimum horizontal distance of 150 feet from any domestic, industrial, irrigation, or public water supply well, or other sensitive feature.
4. ☒ **Attachment B - Potential Sources of Contamination**. A description of any activities or processes which may be a potential source of contamination affecting surface water quality is attached.

Sequence of Construction

5. ☒ **Attachment C - Sequence of Major Activities**. A description of the sequence of major activities which will disturb soils for major portions of the site (grubbing, excavation, grading, utilities, and infrastructure installation) is attached.
   - ☒ For each activity described, an estimate (in acres) of the total area of the site to be disturbed by each activity is given.
   - ☒ For each activity described, include a description of appropriate temporary control measures and the general timing (or sequence) during the construction process that the measures will be implemented.
6. ☒ Name the receiving water(s) at or near the site which will be disturbed or which will receive discharges from disturbed areas of the project: Unnamed Creek and Middle Fork of San Gabriel River

Temporary Best Management Practices (TBMPs)

Erosion control examples: tree protection, interceptor swales, level spreaders, outlet stabilization, blankets or matting, mulch, and sod. Sediment control examples: stabilized construction exit, silt fence, filter dikes, rock berms, buffer strips, sediment traps, and sediment basins. Please refer to the Technical Guidance Manual for guidelines and specifications. All structural BMPs must be shown on the site plan.

7. ☒ **Attachment D – Temporary Best Management Practices and Measures**. TBMPs and measures will prevent pollution of surface water, groundwater, and stormwater. The construction-phase BMPs for erosion and sediment controls have been designed to retain sediment on site to the extent practicable. The following information is attached:

- ☒ A description of how BMPs and measures will prevent pollution of surface water, groundwater or stormwater that originates upgradient from the site and flows across the site.
- ☒ A description of how BMPs and measures will prevent pollution of surface water or groundwater that originates on-site or flows off site, including pollution caused by contaminated stormwater runoff from the site.
- ☒ A description of how BMPs and measures will prevent pollutants from entering surface streams, sensitive features, or the aquifer.
- ☒ A description of how, to the maximum extent practicable, BMPs and measures will maintain flow to naturally-occurring sensitive features identified in either the geologic assessment, TCEQ inspections, or during excavation, blasting, or construction.

8. ☒ The temporary sealing of a naturally-occurring sensitive feature which accepts recharge to the Edwards Aquifer as a temporary pollution abatement measure during active construction should be avoided.

   - ☐ **Attachment E - Request to Temporarily Seal a Feature**. A request to temporarily seal a feature is attached. The request includes justification as to why no reasonable and practicable alternative exists for each feature.
   - ☒ There will be no temporary sealing of naturally-occurring sensitive features on the site.

9. ☒ **Attachment F - Structural Practices**. A description of the structural practices that will be used to divert flows away from exposed soils, to store flows, or to otherwise limit runoff discharge of pollutants from exposed areas of the site is attached. Placement of structural practices in floodplains has been avoided.

10. ☒ **Attachment G - Drainage Area Map**. A drainage area map supporting the following requirements is attached:

    - ☐ For areas that will have more than 10 acres within a common drainage area disturbed at one time, a sediment basin will be provided.
    - ☐ For areas that will have more than 10 acres within a common drainage area disturbed at one time, a smaller sediment basin and/or sediment trap(s) will be used.
    - ☐ For areas that will have more than 10 acres within a common drainage area disturbed at one time, a sediment basin or other equivalent controls are not attainable, but other TBMPs and measures will be used in combination to protect down slope and side slope boundaries of the construction area.
    - ☐ There are no areas greater than 10 acres within a common drainage area that will be disturbed at one time. A smaller sediment basin and/or sediment trap(s) will be used in combination with other erosion and sediment controls within each disturbed drainage area.

☒ There are no areas greater than 10 acres within a common drainage area that will be disturbed at one time. Erosion and sediment controls other than sediment basins or sediment traps within each disturbed drainage area will be used.

11. ☐ **Attachment H - Temporary Sediment Pond(s) Plans and Calculations**. Temporary sediment pond or basin construction plans and design calculations for a proposed temporary BMP or measure have been prepared by or under the direct supervision of a Texas Licensed Professional Engineer. All construction plans and design information must be signed, sealed, and dated by the Texas Licensed Professional Engineer. Construction plans for the proposed temporary BMPs and measures are attached.

☒ N/A

12. ☒ **Attachment I - Inspection and Maintenance for BMPs.** A plan for the inspection of each temporary BMP(s) and measure(s) and for their timely maintenance, repairs, and, if necessary, retrofit is attached. A description of the documentation procedures, recordkeeping practices, and inspection frequency are included in the plan and are specific to the site and/or BMP.

13. ☒ All control measures must be properly selected, installed, and maintained in accordance with the manufacturer's specifications and good engineering practices. If periodic inspections by the applicant or the executive director, or other information indicate a control has been used inappropriately, or incorrectly, the applicant must replace or modify the control for site situations.

14. ☒ If sediment escapes the construction site, off-site accumulations of sediment must be removed at a frequency sufficient to minimize offsite impacts to water quality (e.g., fugitive sediment in street being washed into surface streams or sensitive features by the next rain).

15. ☒ Sediment must be removed from sediment traps or sedimentation ponds not later than when design capacity has been reduced by 50%. A permanent stake will be provided that can indicate when the sediment occupies 50% of the basin volume.

16. ☒ Litter, construction debris, and construction chemicals exposed to stormwater shall be prevented from becoming a pollutant source for stormwater discharges (e.g., screening outfalls, picked up daily).

Soil Stabilization Practices

Examples: establishment of temporary vegetation, establishment of permanent vegetation, mulching, geotextiles, sod stabilization, vegetative buffer strips, protection of trees, or preservation of mature vegetation.

17. ☒ **Attachment J - Schedule of Interim and Permanent Soil Stabilization Practices**. A schedule of the interim and permanent soil stabilization practices for the site is attached.

18. ☒ Records must be kept at the site of the dates when major grading activities occur, the dates when construction activities temporarily or permanently cease on a portion of the site, and the dates when stabilization measures are initiated.

19. ☒ Stabilization practices must be initiated as soon as practicable where construction activities have temporarily or permanently ceased.

Administrative Information

20. ☒ All structural controls will be inspected and maintained according to the submitted and approved operation and maintenance plan for the project.

21. ☒ If any geologic or manmade features, such as caves, faults, sinkholes, etc., are discovered, all regulated activities near the feature will be immediately suspended. The appropriate TCEQ Regional Office shall be immediately notified. Regulated activities must cease and not continue until the TCEQ has reviewed and approved the methods proposed to protect the aquifer from any adverse impacts.

22. ☒ Silt fences, diversion berms, and other temporary erosion and sediment controls will be constructed and maintained as appropriate to prevent pollutants from entering sensitive features discovered during construction.

City of Georgetown

South Lake to South Fork Wastewater Improvements

Organized Sewage Collection System Plan

Reportable contaminant quantities will be determined and based on 30 TAC §327. In the event of any spill of hydrocarbon products or hazardous substances of reportable quantities the following spill response actions will be taken:

1. Williamson County Emergency Services will be notified of the nature and extent of the spill via telephone (911 or 512-864-8200).
2. TCEQ Spill Reporting 24-hour Hotline will be notified of the nature and extent of the spill via telephone (800-832-8224).
3. Spills will be reported prior to any spill response activities.
4. Absorbent materials will be used to contain small scale spill incidents.
5. Absorbent containment booms will be used to contain the discharge of larger scale spill incidents.
6. Any spill response action will follow applicable OSHA health and safety regulations.
7. Any water materials generated by spill response actions will be properly stored and disposed.

City of Georgetown

South Lake to South Fork Wastewater Improvements

Organized Sewage Collection System Plan

Potential sources of contamination related to this project include:

- Sediment from spoil piles transported during stormwater events
- Accidental leakage of fuels from vehicles or equipment during construction activities

All necessary actions to minimize impacts of contamination will be taken before, during, and after the proposed project and in coordination with Attachment A, Spill Response Actions. Other than a potential incidental leak from construction vehicles or equipment, all additional runoff will be from natural sources.

City of Georgetown

South Lake to South Fork Wastewater Improvements

Organized Sewage Collection System Plan

The sequence for the construction of the proposed project improvements for the South Lake to South Fork Wastewater Interceptor are planned as follows:

- Following issuance of notice-to-proceed, Contractor installs silt fencing, tree protection, and stabilized construction entrance.
- Contractor clears site areas and prepares site for construction. (25,969 LF)
- Contractor locates existing utilities prior to construction and coordinates piping tie-ins and switchovers.
- Contractor performs excavation for pipelines and manholes. (25,969 LF)
- Contractor installs wastewater pipelines and manholes.
- Contractor disinfected the pipeline system and performs tie-ins to existing wastewater collection system.
- Contractor completes site construction and initiates site clean-up. (25,969 LF)
- Contractor inspects and maintains temporary erosion and sedimentation controls throughout the term of the project.
- Contractor restores disturbed soil areas with loaming and hydro-seeding.

City of Georgetown

South Lake to South Fork Wastewater Improvements

Organized Sewage Collection System Plan

Temporary erosion and sedimentation control measures will include:

- Silt fencing;
- Rock berms;
- Tree protection;
- Stabilized Construction Entrance (SCE).

Other temporary measures include:

- Temporary crushed limestone base construction access road.

Silt fencing shall be placed downgradient from the proposed site areas to control and filter any stormwater that may be generated from the proposed project site. Silt fencing shall also be placed around the perimeter of any storm drain inlets located on or downgradient of the proposed project area. No significant runon from upgradient stormwater flows are anticipated due to the silt fencing. The silt fencing will further serve to control any stormwater generated by the proposed project site before it is allowed to discharge as stormwater-sediment flow from the site. Silt fencing is shown on the project drawings submitted with this application.

Rock berms will be placed along low lying and other applicable areas of the proposed site to control and detain stormwater that may be generated from the proposed project site.

Tree protection will be placed around the critical root zone (CRZ) of protected trees on the proposed project site. This control measure will prevent erosion near the roots and protect the roots from being damaged by construction activities.

A stabilized construction entrance will be installed at the entrance of the construction area to minimize the tracking of sediments from the project site. All access to the construction site will use this SCE.

The area will remain vegetated where possible and care will be taken to avoid geological features identified during the geological assessment.

These temporary erosion and sedimentation control measures are indicated on the site drawings and will be put in place before the start of construction and shall remain in place for the duration of site construction activities.

City of Georgetown

South Lake to South Fork Wastewater Improvements

Organized Sewage Collection System Plan

Structural Practices that will be used to limit the runoff discharge of sediments and pollutants from exposed areas of the proposed project include the following practices:

- Silt fencing;
- Rock berms;
- Stabilized Construction Entrance (SCE);

These practices are described in Attachment D, Temporary BMPs and Measures. No temporary structural facilities, such as sedimentation ponds, will be constructed or used during construction activities. See WPAP application for permanent BMPs.

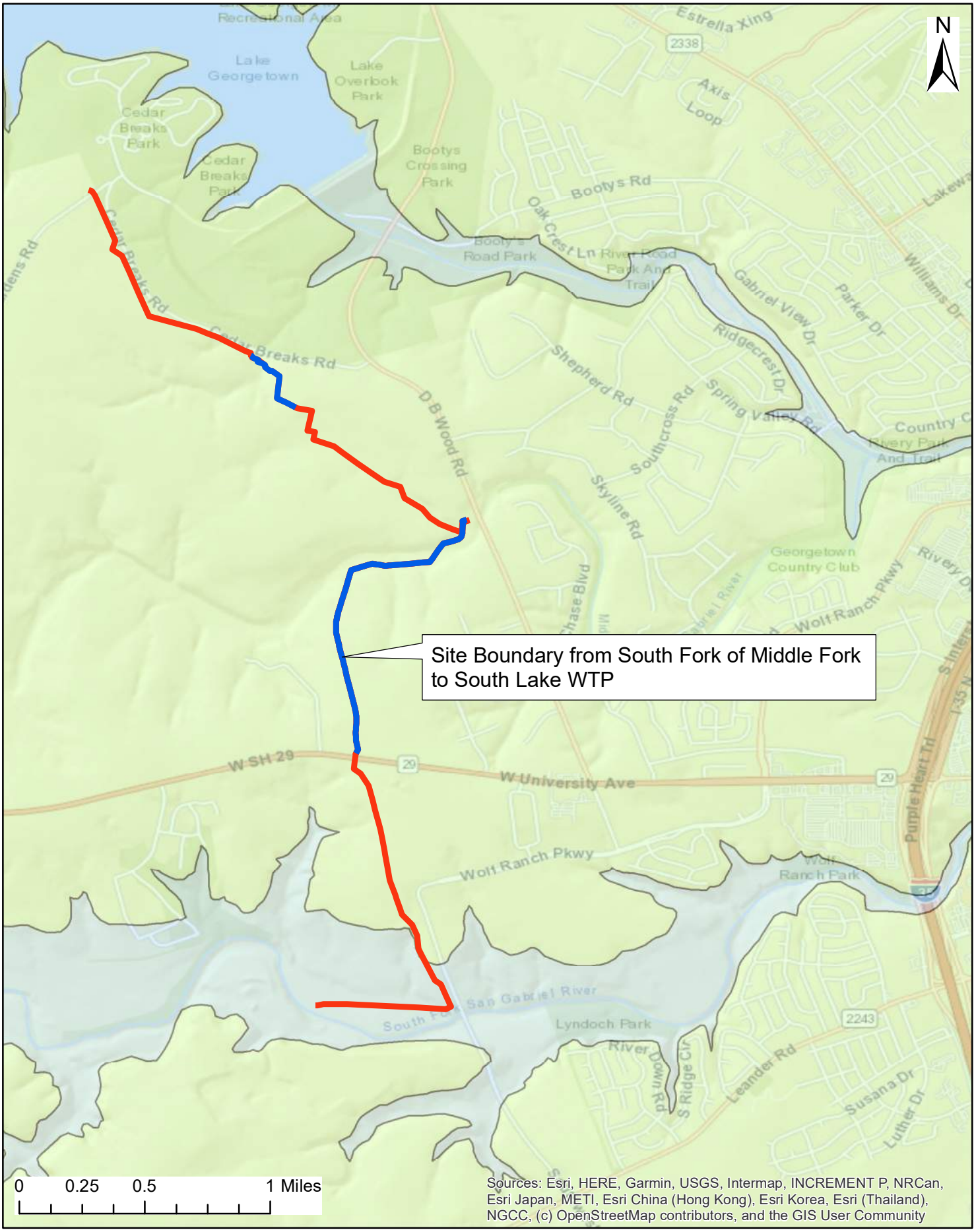

Legend

- Force Main
- Gravity Main

Edwards Aquifer

- Edwards Aquifer Contributing Zone
- Edwards Aquifer Recharge Zone
- Edwards Aquifer Transition Zone

Attachment G: Drainage Map
South Lake to South Fork Wastewater Improvements
Williamson County, Texas

CDM Smith

City of Georgetown

South Lake to South Fork Wastewater Improvements

Organized Sewage Collection System Plan

Silt fencing, rock berms, and the stabilized construction entrance shall be inspected once per week and following every significant rainfall event (of at least 0.1 inch or greater). If such inspections reveal that additional measurements are needed to prevent movement of sedimentation to offsite areas, the Contractor shall promptly install additional erosion control devices as may be required.

Silt fences shall be maintained and repaired as follows:

- Remove accumulated sediment once build up reaches 6 inches
- Replace torn or damaged filter fabric
- Replace or repair any sections crushed or collapsed
- Make any other repairs or adjustments, as needed, to ensure the silt fencing is functioning properly

Rock berms shall be maintained and repaired as follows:

- Remove accumulated sediment once build up reaches 6 inches
- Repair any loose wire sheathing or reshape as needed
- Make any other repairs or adjustments, as needed, to ensure the rock berm is functioning properly

The stabilized construction entrance will also be inspected following precipitation events and stone will be replaced if silt accumulation is found to hinder the role of this BMP to minimize the off-site tracking of sediment.

Concrete washout areas shall be inspected daily and after every significant rainfall event (of at least 0.1 inch or greater) to check for leaks, identify any plastic linings and sidewalls have been damaged by construction activities or if they are over 75% capacity. When the washout area is over 75% capacity the wash water shall be removed or allowed to evaporate to avoid overflows. The hardened cement solids shall be removed and recycled.

City of Georgetown

South Lake to South Fork Wastewater Improvements

Organized Sewage Collection System Plan

Temporary soil stabilization practices will include minimizing soil disturbance during construction and hydroseeding of temporary vegetation in disturbed areas. These temporary soil stabilization practices will be initiated as soon as practicable in portions of the site where construction activities have temporarily or permanently ceased, but in no case more than 14 days after the construction activity in that portion of the site has temporarily or permanently ceased. These interim measures will be inspected, maintained, and will remain in place for the duration of the construction phase of the project. These control measures will be planned and implemented in accordance with the Edwards Aquifer Technical Guidance Manual.

Permanent soil stabilization and site restoration will occur prior to project completion. Permanent soil stabilization measures will include the loaming, hydroseeding, and re-vegetation of the disturbed areas using a native grass mix that is properly monitored and managed until long-term vegetation stabilization has occurred. Permanent vegetated filter strips will also be established in places shown on the construction plan sheets.

Agent Authorization Form
For Required Signature
Edwards Aquifer Protection Program
Relating to 30 TAC Chapter 213
Effective June 1, 1999

I Chris Pousson,
Print Name

Project Manager,
Title - Owner/President/Other

of City of Georgetown,
Corporation/Partnership/Entity Name

have authorized Gerald S. Furrier
Print Name of Agent/Engineer

of CDM Smith, Inc.
Print Name of Firm

to represent and act on the behalf of the above named Corporation, Partnership, or Entity for the purpose of preparing and submitting this plan application to the Texas Commission on Environmental Quality (TCEQ) for the review and approval consideration of regulated activities.

I also understand that:

1. The applicant is responsible for compliance with 30 Texas Administrative Code Chapter 213 and any condition of the TCEQ's approval letter. The TCEQ is authorized to assess administrative penalties of up to $10,000 per day per violation.

2. For those submitting an application who are not the property owner, but who have the right to control and possess the property, additional authorization is required from the owner.

3. Application fees are due and payable at the time the application is submitted. The application fee must be sent to the TCEQ cashier or to the appropriate regional office. The application will not be considered until the correct fee is received by the commission.

4. A notarized copy of the Agent Authorization Form must be provided for the person preparing the application, and this form must accompany the completed application.

5. No person shall commence any regulated activity on the Edwards Aquifer Recharge Zone, Contributing Zone or Transition Zone until the appropriate application for the activity has been filed with and approved by the Executive Director.

SIGNATURE PAGE:

Applicant's Signature

6-13-24
Date

THE STATE OF TEXAS §

County of WILLIAMSON §

BEFORE ME, the undersigned authority, on this day personally appeared CHRIS POUSSON known to me to be the person whose name is subscribed to the foregoing instrument, and acknowledged to me that (s)he executed same for the purpose and consideration therein expressed.

GIVEN under my hand and seal of office on this 14th day of JUNE, 2024

NOTARY PUBLIC

SHEILA K. MITCHELL
Typed or Printed Name of Notary

SHEILA KAYE MITCHELL
Notary Public, State of Texas
Comm. Expires 11-10-2025
Notary ID 133441435

MY COMMISSION EXPIRES: NOV. 10, 2025

Easement/Possession and Use Agreement

Cedar Breaks and D B Wood Lift Station
Georgetown, TX

POSSESSION AND USE AGREEMENT FOR UTILITY PURPOSES

STATE OF TEXAS	§	Project: South Lake Water Treatment Plant To South Fork Wastewater Interceptor
	§	Parcel Nos.: D B Wood Rd and Cedar Breaks Rd Lift Station Sites
COUNTY OF WILLIAMSON	§	

This Possession and Use Agreement for Utility Purposes (this "Agreement"), effective the ____ day of _____, 2024 (the "Effective Date"), between the City of Georgetown, Texas, (the "City"), Jamie Avant Deyhle, acting by Jim Forrest Avant, attorney-in-fact; Jim Forrest Avant; and Wood Avant Investments Ltd, a Texas limited partnership, whose address is 1800 Bering Drive, Suite 310, Houston, Texas 77057, as owners of the undivided interest in the Property (collectively, the "Grantor(s)" whether one or more), grants the irrevocable right to possession and use to the City, its contractors, agents and all others deemed necessary by the City for the purpose of constructing two (2) wastewater lift station sites on Grantors' property as part of the "South Lake Water Treatment Plant to the South Fork Wastewater Interceptor Project" (the "Construction Project"). The property involved for the wastewater lift station sites is described more fully in field notes and plat maps (attached as Exhibit "A") and made a part of this Agreement by reference (the "Property"), being legally described as:

AS MORE PARTICULARLY DESCRIBED BY METES AND BOUNDS IN EXHIBIT "A" ATTACHED HERETO AND BY THIS REFERENCE INCORPORATED HEREIN.

1. For the consideration paid by the City, which is set forth in Paragraph two below, the receipt and sufficiency of which is acknowledged, Grantor(s) grant, bargain, sell and convey to the City the right of entry and exclusive possession and use of the Property for the purpose of constructing two (2) wastewater lift stations and appurtenances thereto and the right to remove any improvements, if any, as well as temporary possession and use of the areas described and depicted in Exhibit A attached hereto as "Temporary Construction Easements," for the duration of the Construction Project. Authorized activities include surveying, inspection, environmental studies, archeological studies, clearing, demolition, construction of permanent improvements, relocating, replacing and improving existing utility facilities, locating new utility facilities, and other work required to be performed in connection with the Construction Project. This Agreement will extend to the City, its contractors and assigns, owners of any existing utilities on the Property and those which may be lawfully permitted on the Property by the City in the future.

2. In full consideration for this irrevocable grant of possession and use subject to the terms hereof, the City will tender to the Grantor(s) the sum of Ten dollars and no cents ($10.00). The Grantor(s) agree that this sum represents adequate and full compensation for the

possession and use of the Property. The City will be entitled to take possession and use of the Property upon tender of payment. If the City determines that it is necessary to use its power of eminent domain to acquire the Property, the parties agree that this sum will be deducted from any final settlement amount, award or verdict, if any. In the event the amount of the award or verdict for fee title, if any, is less than the amount the City has paid for the possession and use of the Property, then the Grantor(s) agree that the original amount tendered represents an overpayment and the City is entitled to seek a refund. In the event the award of the Special Commissioners is greater than the approved value, the difference will be deposited in the registry of the Court within 60 days from the date the Special Commissioners render their Award. In the event any settlement or final judgment exceeds the amount paid pursuant to this right of entry or pursuant to an award of the Special Commissioners, the City shall pay said funds to Grantor(s) by direct payment or deposit in the registry of the Court within 60 days of such settlement or final judgment.

3. The Grantor(s) warrant and represent by, through and under the Grantor(s), but not otherwise, that, as of the Effective Date, title to the Property is free and clear of all liens and encumbrances, other than those of record, and that proper releases will be executed for the Property prior to funds being disbursed under this Agreement. The Grantor(s) further warrant that no other person or corporation owns an interest in the fee title to the Property. Grantor(s) further agree to indemnify the City from all unreleased or undisclosed liens, claims or encumbrances affecting the Property. The above warranties are made by Grantor and accepted by the City subject to the following:

   A. Visible and apparent easements not appearing of record.

   B. Any discrepancies, conflicts, or shortages in area or boundary lines or any encroachments or any overlapping of improvements which a current survey would show.

   C. Easements, restrictions, reservations, covenants, conditions, oil and gas leases, mineral severances, and encumbrances for taxes and assessments (other than liens and conveyances) presently of record in the Official Public Records of Williamson County, Texas, that affect the Property, but only to the extent that said items are still valid and in force and effect at this time.

4. This Agreement is made with the understanding that the City will attempt to negotiate in good faith with the Grantors to acquire the fee simple interest of the Property by direct purchase or donation. However, Grantors acknowledge that the City intends to file a Petition for Condemnation if negotiations fail, and the Special Commissioners' Hearing will be set within One Hundred-Twenty (120) days of the filing of the Petition for Condemnation.

5. The parties agree that the valuation date for determining the amount of just compensation for the Property, for eminent domain proceeding purposes, will be the date this Agreement is fully executed.

6. This grant will not prejudice Grantors' rights to receive full and just compensation for the Property interest to be acquired by the City as part of its Construction Project, as improved with the improvements thereon, if any, and damages, if any, to the remainder of Grantors'

lands, save and except all oil, gas and sulphur, as the Property exists on the Effective Date of this Agreement. This grant will not prejudice the Grantors' rights to any relocation benefits for which Grantors may be eligible.

7. In the event the City continues with the eminent domain proceedings, the City will not be liable to Grantor(s) for interest upon any award or judgment as a result of such proceedings for the amount paid to Grantor(s) under this Agreement for any period of time prior to the valuation date. Payment of any additional interest owed may be deferred by the City until entry of judgment.

8. The purpose of this Agreement is to allow the City to proceed with its Construction Project without delay. The Grantor(s) expressly acknowledges that, to Grantors' knowledge (without any duty of investigation or inquiry), the proposed Construction Project is for a valid public use.

9. Grantor(s) reserve all of the oil, gas and sulphur in and under the land herein conveyed but waive all right of ingress and egress to the surface for the purpose of exploring, developing, mining or drilling. Nothing in this reservation will affect the title and rights of the City to take and use all other minerals and materials thereon, and thereunder. The extraction of oil, gas and minerals may not affect the geological stability of the surface.

10. The undersigned Grantor(s) agree to pay all ad valorem taxes, as they become due, including prorated taxes for the current year, and special assessments due at the time the City takes possession of the Property. Prorations, if any, shall be made through the date when the City of Georgetown takes possession of the Property.

11. Notwithstanding the acquisition of right of possession to the Property by the City in a condemnation proceeding by depositing the Special Commissioners' award into the registry of the court, less any amounts tendered to the Grantor(s) pursuant to Paragraph 2 above, this Agreement shall continue to remain in effect until the City acquires title to the Property either by negotiation, settlement, or final court judgment.

12. This Agreement will also extend to and bind the heirs, devisees, executors, administrators, legal representatives, successors and assigns of the parties.

13. It is agreed the City will record this document.

Signature Pages Follow.

IN WITNESS WHEREOF, THIS INSTRUMENT IS EXECUTED ON THIS THE ___DAY OF _____, 2024.

GRANTOR:

Jamie Avant Deyhle

Jim F Avant as Agent & Attorney-in-Fact

Jim Forrest Avant, attorney-in-fact

Date: 2-12-24

Jim Forrest Avant

Jim Forrest Avant

Date: 2-12-24

Wood Avant Investments Ltd,
a Texas limited partnership

By: Wood Avant Investments GP LLC,
a Texas limited liability company
Its: General Partner

By: Jim F Avant
Jim Forrest Avant, Vice President

Date: 2-12-24

Acknowledgment

State of Texas
County of HARRIS

This instrument was acknowledged before me on the 12th day of February, 2024, by Jim Forrest Avant as attorney-in-fact on behalf of Jamie Avant Deyhle.

MICHELLE R MCKAY
6876829
NOTARY PUBLIC, STATE OF TEXAS
MY COMMISSION EXPIRES
JUNE 14, 2024

Michelle R McKay
Notary Public, State of Texas

Acknowledgment

State of Texas
County of HARRIS

This instrument was acknowledged before me on the 12th day of February, 2024, by Jim Forrest Avant.

MICHELLE R MCKAY
6876829
NOTARY PUBLIC, STATE OF TEXAS
MY COMMISSION EXPIRES
JUNE 14, 2024

Michelle R McKay
Notary Public, State of Texas

Acknowledgment

State of Texas
County of HARRIS

This instrument was acknowledged before me on the 12th day of February, 2024, by Jim Forrest Avant, as the Vice President of Wood Avant Investments GP LLC, a Texas limited liability company, on behalf of said limited liability company, in its capacity as the General Partner of Wood Avant Investments Ltd, a Texas limited partnership, on behalf of said limited partnership.

MICHELLE R MCKAY
6876829
NOTARY PUBLIC, STATE OF TEXAS
MY COMMISSION EXPIRES
JUNE 14, 2024

Michelle R McKay

Notary Public, State of Texas

THE CITY OF GEORGETOWN, TEXAS

Executed by and approved for the purpose and effect of activating and/or carrying out the orders, established policies or work programs heretofore approved and authorized by the City Council.

By: _____

Title: City Manager

Date: 2/21/24

Corporate Acknowledgment

State of Texas
County of Williamson

This instrument was acknowledged before me on the 21st day of February, 2024, by David Morgan, City Manager of and on behalf of the City of Georgetown, Texas.

Shannon Biddle
My Commission Expires
9/26/2026
Notary ID 133982902

Notary Public, State of Texas

DESCRIPTION

DESCRIPTION OF A 0.5191 ACRE (22,612 SQ FT) TRACT OF LAND, LOCATED IN THE JOSEPH FISH SURVEY, ABSTRACT NO. 232, WILLIAMSON COUNTY, TEXAS, BEING A PORTION OF THAT CERTAIN CALLED 2055.12 ACRE TRACT OF LAND, SAVE AND EXCEPT A CALLED 15 ACRE TRACT, A CALLED 30 ACRE TRACT, A CALLED 90 ACRE TRACT, AND A CALLED 18.522 ACRE TRACT DESCRIBED AS "TRACT I" IN A SPECIAL WARRANTY DEED TO WOOD AVANT INVESTMENTS, LTD OF RECORD IN DOCUMENT NO. 2020167463, OF THE OFFICIAL PUBLIC RECORDS OF WILLIAMSON COUNTY, TEXAS, SAID 0.5191 ACRE (22,612 SQ FT) TRACT OF LAND BEING SURVEYED ON THE GROUND IN FEBRUARY THROUGH OCTOBER 2023, UNDER THE DIRECT SUPERVISION OF MIGUEL A. ESCOBAR, LSLS, RPLS, AND BEING MORE PARTICULARLY DESCRIBED BY METES AND BOUNDS AS FOLLOWS:

COMMENCING at a cotton gin spindle with washer stamped "STEGER BIZZELL" found in the south right-of-way line of Cedar Breaks Road, a called 10.21 acre right-of-way, described as "Exhibit A" in a Contract of Sale to Williamson County of record in Vol. 901, Page 551, of the Deed Records of Williamson County, Texas, same line being the north boundary line of said Tract I, for the northwest corner of a called 15.00 acre tract of land described in a Special Warranty Donation Deed with Use Restriction to Georgetown Independent School District of record in Document No. 2019122376, said Official Public Records; from which point, a 1/2-inch iron rod with cap stamped "STEGER BIZZELL" found for the southwest corner of said 15.00 acre tract bears South 09°49'49" West, a distance of 816.51 feet;

THENCE, with said common line of Cedar Breaks Road and Tract I, the following two (2) courses and distances:

1. North 80°03'37" West, a distance of 414.64 feet, to a calculated point at the beginning of a non-tangent curve to the right;
2. With said curve to the right, having a delta angle of 06°58'29", a radius of 1492.69 feet, an arc length of 181.71 feet, and a chord which bears North 76°35'10" West, for a chord distance of 181.60 feet, to a 1/2-inch iron rod with cap stamped "INLAND GEODETICS" set for the northeast corner and **POINT OF BEGINNING** of the herein described tract;

THENCE, leaving the south right-of-way line of Cedar Breaks Road, and over and across said Tract I, the following three (4) courses and distances:

(1) **South 24°29'26" West**, a distance of **85.39 feet**, to a 1/2-inch iron rod with cap stamped "INLAND GEODETICS" set in the east boundary line of the herein described tract;

(2) **Continuing South 24°29'26" West**, a distance of **68.08 feet**, to a 1/2-inch iron rod with cap stamped "INLAND GEODETICS" set for the southeast corner of the herein described tract;

(3) **North 65°30'34" West**, a distance of **155.00 feet**, to a 1/2-inch iron rod with cap stamped "INLAND GEODETICS" set for the southwest corner of the herein described tract;

(4) **North 24°29'26" East**, a distance of **141.00 feet**, to a 1/2-inch iron rod with cap stamped "INLAND GEODETICS" set in said common line of Cedar Breaks Road and Tract I, for the northwest corner of

the herein described tract; from which point, a 1/2-inch iron rod found in said common line along a non-tangent curve to the right having a delta angle of 06°58'49", a radius of 1492.69 feet, an arc length of 181.85 feet, and a chord which bears North 63°38'14" West, for a chord distance of 181.74 feet;

(5) **THENCE**, with said common line of Cedar Breaks Road and Tract I, and a curve to the left, having a delta angle of 05°58'17", a **radius of 1492.69 feet**, an arc length of 155.57 feet, and a chord which bears **South 70°06'47" East**, for a chord distance of **155.50 feet**, to the **POINT OF BEGINNING** and containing 0.5191 acres (22,612 sq.ft.) of land, more or less, within these metes and bounds.

Together with a variable width (0.6182 acres, 28,927 Sq.Ft.) Temporary Construction Easement being adjacent to, parallel with the following courses:

a) 10 feet easterly of course 1,
b) 30 feet easterly of course 2,
c) 35 feet southerly of course 3, and
d) 100 feet westerly of course 4,

as shown on the attached survey map of the subject tract.

Bearings are based on the Texas Coordinate System of 1983, Central Zone, (NAD 83(2011)). All distances are surface values represented in US Survey Feet based on a Surface-to-Grid Combined Adjustment Factor of 0.9998673234.

The foregoing metes and bounds description, and survey on which it was based, is accompanied by and a part of a survey map of the subject tract.

That I, Miguel A. Escobar, a Registered Professional Land Surveyor, do hereby certify that the above description and the accompanying sketch is true and correct to the best of my knowledge and belief and the property described herein was determined by a survey made on the ground during the months of February through October, 2023, under my direct supervision.

WITNESS MY HAND AND SEAL at Round Rock, Williamson County, Texas on this 26th of January, 2024, A.D.

INLAND GEODETICS

STATE OF TEXAS
REGISTERED
MIGUEL ANGEL ESCOBAR
5630
PROFESSIONAL
LAND SURVEYOR

Miguel A. Escobar, L.S.L.S., R.P.L.S.
Texas Reg. No. 5630
1504 Chisholm Trail Rd #103
Round Rock, TX 78681
TBPELS Firm No. 10059100

P:\Projects\CDM Smith (CDMS)\CDMS-003 - S. Lake WTP To SF Interceptor WW Syst Expansion\5-Descriptions-Reports\LS TITLE\CDMS-003-DESCRIPTION-CEDAR BERAKS LS.docx

EXHIBIT _____

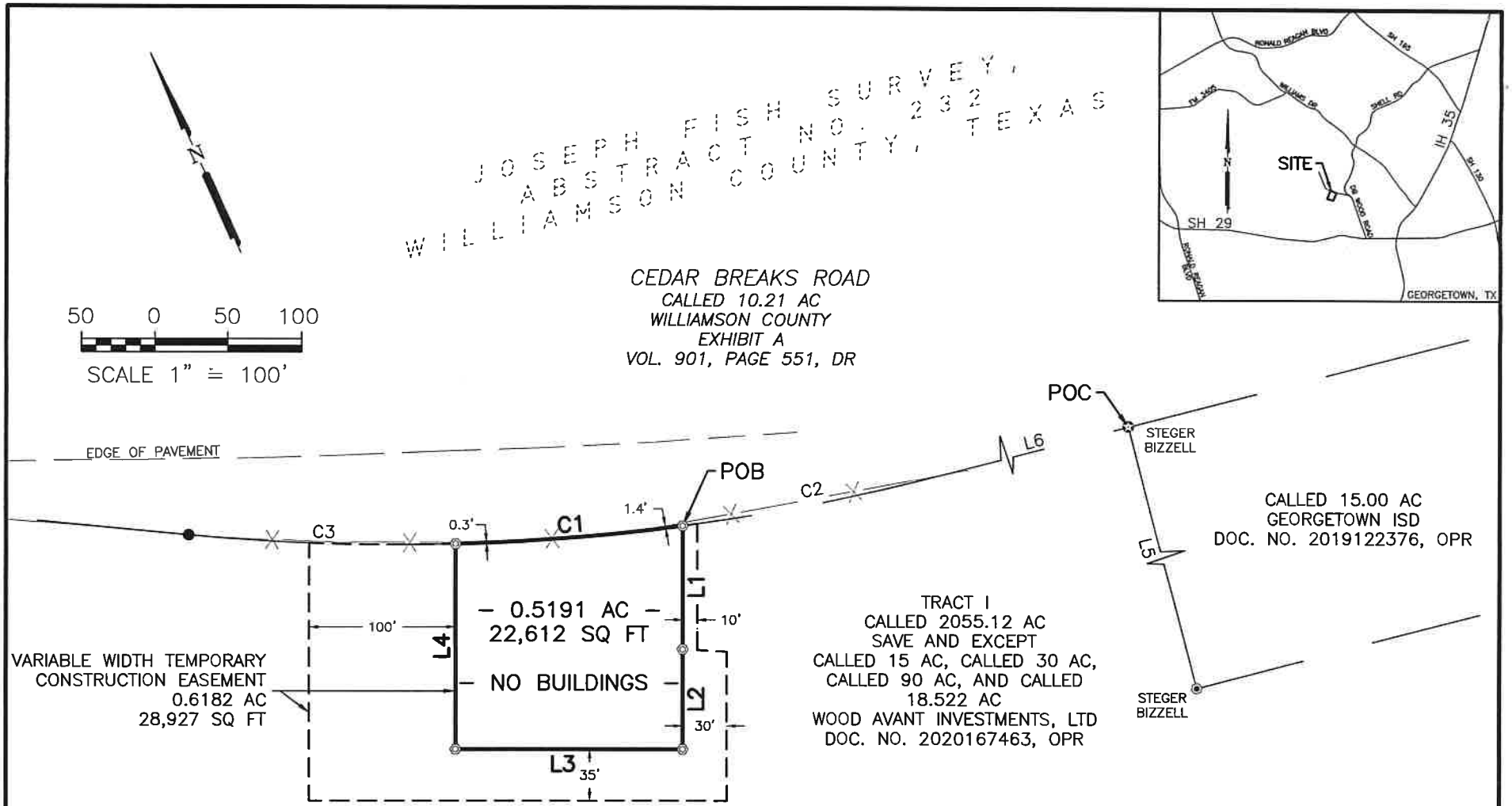

LINE	BEARING	DISTANCE
L1	S 24°29'26" W	85.39'
L2	S 24°29'26" W	68.08'
L3	N 65°30'34" W	155.00'
L4	N 24°29'26" E	141.00'
L5	S 09°49'49" W	816.51'
L6	N 80°03'37" W	414.64'

CURVE	RADIUS	ARC LENGTH	CHORD LENGTH	CHORD BEARING	DELTA ANGLE
C1	1492.69'	155.57'	155.50'	S 70°06'47" E	5°58'17"
C2	1492.69'	181.71'	181.60'	N 76°35'10" W	6°58'29"
C3	1492.69'	181.85'	181.74'	N 63°38'14" W	6°58'49"

SURVEY OF
0.5191 AC OF LAND
SHOWING PROPERTY OF
WOOD AVANT
INVESTMENTS, LTD
JOSEPH FISH SURVEY
ABSTRACT NO. 232
WILLIAMSON COUNTY

INLAND GEODETICS
Land Surveyors
1504 CHISHOLM TRAIL RD., #103
ROUND ROCK, TX 78681
512-238-1200
FIRM REG. NO. 100591-00

SHEET 3 OF 4

CDMS-003 1/26/2024

P:\PROJECTS\CDM SMITH (CDMS)\CDMS-003 - S. LAKE WTP TO SF INTERCEPTOR WW SYST EXPANSION\1-DRAWINGS\LS TITLE\CEDAR BREAKS LS\CDMS-003-TITLE-CEDAR BREAKS LS.DWG

BB

EXHIBIT _____

NOTES:

1. BEARINGS ARE BASED ON THE TEXAS COORDINATE SYSTEM OF 1983, CENTRAL ZONE (NAD_83 (2011)). ALL DISTANCES SHOWN HEREON ARE SURFACE VALUES REPRESENTED IN U.S. SURVEY FEET BASED ON A SURFACE-TO-GRID COMBINED ADJUSTMENT FACTOR OF 0.9998673234.

2. THIS SURVEY WAS MADE WITHOUT THE BENEFIT OF AN ABSTRACT OF TITLE NOR A TITLE COMMITMENT OR TITLE POLICY. THERE MAY BE ADDITIONAL EASEMENTS OR RESTRICTIONS, NOT SHOWN HEREON, WHICH MAY AFFECT THE PROPERTY.

3. THE SYMBOLS REFLECTED IN THE LEGEND AND ON THIS SURVEY MAY HAVE BEEN ENLARGED FOR CLARITY. THE SYMBOLS HAVE BEEN PLOTTED AT THE CENTER OF THE FIELD LOCATION AND MAY NOT REPRESENT THE ACTUAL SIZE OR SHAPE OF THE FEATURE.

4. UTILITY INFORMATION SHOWN HEREON CONSTITUTES FIELD RECOVERY OF OBSERVED EVIDENCE OF UTILITIES. LOCATIONS OF UNDERGROUND UTILITIES/STRUCTURES MAY VARY FROM LOCATIONS SHOWN HEREON. ADDITIONAL BURIED UTILITIES/STRUCTURES, SUCH AS ELECTRICAL, TELEPHONE, CABLE TV AND PIPELINES, MAY BE ENCOUNTERED. NO EXCAVATIONS WERE MADE DURING THE PROGRESS OF THIS SURVEY TO LOCATE BURIED UTILITIES/STRUCTURES. FOR INFORMATION REGARDING BURIED UTILITIES/STRUCTURES OR BEFORE ANY EXCAVATION IS BEGUN, CONTACT THE APPROPRIATE AGENCIES FOR VERIFICATION OF UTILITY TYPE AND FOR FIELD LOCATION.

5. BY GRAPHIC PLOTTING ONLY, THIS PROPERTY IS IN ZONE X (NOT SHADED) – AREAS DETERMINED TO BE OUTSIDE THE 0.2% ANNUAL CHANCE FLOODPLAIN AS DEFINED BY THE FEDERAL EMERGENCY MANAGEMENT AGENCY, FLOOD INSURANCE RATE MAP, COMMUNITY PANEL NO. 48491C0290E, THAT BEARS AN EFFECTIVE/REVISED DATE OF 9/26/2008. THE SURVEYOR MAKES NO ASSURANCE AS TO THE ACCURACY OF THE DELINEATIONS SHOWN ON THE FEDERAL EMERGENCY MANAGEMENT AGENCY FLOOD INSURANCE RATE MAP. THIS STATEMENT IS FOR INSURANCE PURPOSES ONLY AND IS NOT AN OPINION THAT THE PROPERTY WILL OR WILL NOT FLOOD. A FLOOD STUDY WAS NOT CONDUCTED ON THE PROPERTY.

6. THE USE OF THE WORD CERTIFY OR CERTIFICATION ON THIS DOCUMENT ONLY CONSTITUTES AN EXPRESSION OF PROFESSIONAL OPINION REGARDING THOSE FACTS OR FINDINGS WHICH ARE THE SUBJECT OF THE CERTIFICATION, AND DOES NOT CONSTITUTE A WARRANTY OR GUARANTEE, EITHER EXPRESSED OR IMPLIED.

7. THE FOREGOING MAP AND SURVEY ON WHICH IT IS BASED IS ACCOMPANIED BY AND A PART OF SEPARATE METES AND BOUND DESCRIPTION OF THE SUBJECT TRACT.

THIS IS TO CERTIFY THAT THIS SURVEY WAS MADE ON THE GROUND IN FEBRUARY THROUGH OCTOBER, 2023, BY ME OR UNDER MY SUPERVISION, THAT THIS SURVEY PLAT REPRESENTS THE FACTS FOUND AT THE TIME OF THE SURVEY.

INLAND GEODETICS

MIGUEL A. ESCOBAR, L.S.L.S., R.P.L.S.
TEXAS REG. NO. 5630

STATE OF TEXAS
REGISTERED
MIGUEL ANGEL ESCOBAR
5630
PROFESSIONAL
LAND SURVEYOR

LEGEND

●	IRON ROD FOUND 1/2" IN DIAMETER OR OTHERWISE NOTED
◎	1/2" IRON ROD SET WITH CAP STAMED "INLAND GEODETICS"
R.O.W.	RIGHT OF WAY
POB	POINT OF BEGINNING
POC	POINT OF COMMENCING
DR	DEED RECORDS OF WILLIAMSON COUNTY, TEXAS
OPR	OFFICIAL PUBLIC RECORDS OF WILLIAMSON COUNTY, TEXAS
——X——	WIRE FENCE

SURVEY OF
0.5191 AC OF LAND
SHOWING PROPERTY OF
WOOD AVANT
INVESTMENTS, LTD
JOSEPH FISH SURVEY
ABSTRACT NO. 232
WILLIAMSON COUNTY

INLAND GEODETICS
Land Surveyors

1504 CHISHOLM TRAIL RD., #103
ROUND ROCK, TX 78681
512-238-1200
FIRM REG. NO. 100591-00

SHEET 4 OF 4

CDMS-003 1/26/2024

BB P:\PROJECTS\CDM SMITH (CDMS)\CDMS-003 - S. LAKE WTP TO SF INTERCEPTOR WW SYST EXPANSION\4-DRAWINGS\LS TITLE\CEDAR BREAKS LS\CDMS-003-TITLE-CEDAR BREAKS LS.DWG

DESCRIPTION

DESCRIPTION OF A 1.686 ACRE (73,459 SQ FT) TRACT OF LAND, LOCATED IN THE ISAAC DONAGAN SURVEY, ABSTRACT NO. 178 WILLIAMSON COUNTY, TEXAS, BEING A PORTION OF THAT CERTAIN CALLED 2055.12 ACRE TRACT OF LAND, SAVE AND EXCEPT A CALLED 15 ACRE TRACT, A CALLED 30 ACRE TRACT, A CALLED 90 ACRE TRACT, AND A CALLED 18.522 ACRE TRACT DESCRIBED AS "TRACT I" IN A SPECIAL WARRANTY DEED TO WOOD AVANT INVESTMENTS, LTD OF RECORD IN DOCUMENT NO. 2020167463, OF THE OFFICIAL PUBLIC RECORDS OF WILLIAMSON COUNTY, TEXAS, SAID 1.686 ACRE (73,459 SQ FT) TRACT OF LAND BEING SURVEYED ON THE GROUND IN FEBRUARY THROUGH OCTOBER 2023, UNDER THE DIRECT SUPERVISION OF MIGUEL A. ESCOBAR, LSLS, RPLS, AND BEING MORE PARTICULARLY DESCRIBED BY METES AND BOUNDS AS FOLLOWS:

COMMENCING at a 1/2-inch iron rod with cap stamped "STEGER BIZZELL" found in the west right-of-way line of D.B. Wood Road, a called 6.91 acre right-of-way described in a Contract of Sale to Williamson County, Texas of record in Volume 901, Page 551, of the Deed Records of Williamson County, Texas, for the southeast corner of a called 90.00 acre tract of land described in a Special Warranty Deed with Use Restriction to Georgetown Independent School District of record in Document No. 2019122375, of said Official Public Records; from which point, a mag nail with washer stamped "STEGER BIZZELL" found for the southwest corner of said 90.00 acre tract bears South 69°34'34" East, a distance of 1018.53 feet;

THENCE, South 20°25'32" East, with said west right-of-way line of D.B. Wood Road, same line being the east boundary line of said Tract I, a distance of 825.81 feet, to a calculated point for the northeast corner and POINT OF BEGINNING of the herein described tract;

(1) THENCE, South 20°25'32" East, with said common line of D.B. Wood Road and Tract I, a distance of **341.88 feet**, to a 1/2-inch iron rod with cap stamped "INLAND GEODETICS" set for the southeast corner of the herein described tract;

THENCE, over and across the interior of said Tract I, the following seven (7) courses and distances:

(2) South 37°25'56" West, a distance of **97.76 feet**, to a 1/2-inch iron rod with cap stamped "INLAND GEODETICS" set for a south corner of the herein described tract;

(3) South 68°08'36" West, a distance of **124.97 feet**, to a 1/2-inch iron rod with cap stamped "INLAND GEODETICS" set for the southwest corner of the herein described tract;

(4) North 22°25'16" West, a distance of **35.00 feet**, to a 1/2-inch iron rod with cap stamped "INLAND GEODETICS" set on the western boundary line of the herein described tract;

(5) North 22°25'16" West, a distance of **212.26 feet**, to a 1/2-inch iron rod with cap stamped "INLAND GEODETICS" set for an exterior ell corner of the herein described tract;

(6) **North 68°08'40" East**, a distance of **57.72 feet**, to a 1/2-inch iron rod with cap stamped "INLAND GEODETICS" set for an interior ell corner of the herein described tract;

(7) **North 21°21'40" West**, a distance of **144.46 feet**, to a 1/2-inch iron rod with cap stamped "INLAND GEODETICS" set for the northwest corner of the herein described tract;

(8) **North 68°08'40" East**, a distance of **161.02 feet**, to the **POINT OF BEGINNING** and containing 1.686 acres (73,459 SQ FT) of land, more or less, within these metes and bounds.

Bearings are based on the Texas Coordinate System of 1983, Central Zone, (NAD 83(2011)). All distances are surface values represented in US Survey Feet based on a Surface-to-Grid Combined Adjustment Factor of 0.9998673234.

Together with a variable width (0.9631 acres, 41,954 Sq.Ft.) Temporary Construction Easement being adjacent to, parallel with the following courses:

a) 85 feet westerly of course 5,
b) 145 feet westerly of course 7, and
c) 10 feet northerly of course 8,

as shown on the attached survey map of the subject tract.

The foregoing metes and bounds description, and survey on which it was based, is accompanied by and a part of a survey map of the subject tract.

That I, Miguel A. Escobar, a Registered Professional Land Surveyor, do hereby certify that the above description and the accompanying sketch is true and correct to the best of my knowledge and belief and the property described herein was determined by a survey made on the ground during the months of February through October, 2023, under my direct supervision.

WITNESS MY HAND AND SEAL at Round Rock, Williamson County, Texas on this 26th of January, 2024, A.D.

INLAND GEODETICS

STATE OF TEXAS
REGISTERED
MIGUEL ANGEL ESCOBAR
5630
PROFESSIONAL
LAND SURVEYOR

Miguel A. Escobar, L.S.L.S., R.P.L.S.
Texas Reg. No. 5630
1504 Chisholm Trail Rd #103
Round Rock, TX 78681
TBPELS Firm No. 10059100

P:\Projects\CDM Smith (CDMS)\CDMS-003 - S. Lake WTP To SF Interceptor WW Syst Expansion\5-Descriptions-Reports\DB WOOD LS\CDMS-003-Description-DB Wood LS.docx

EXHIBIT _____

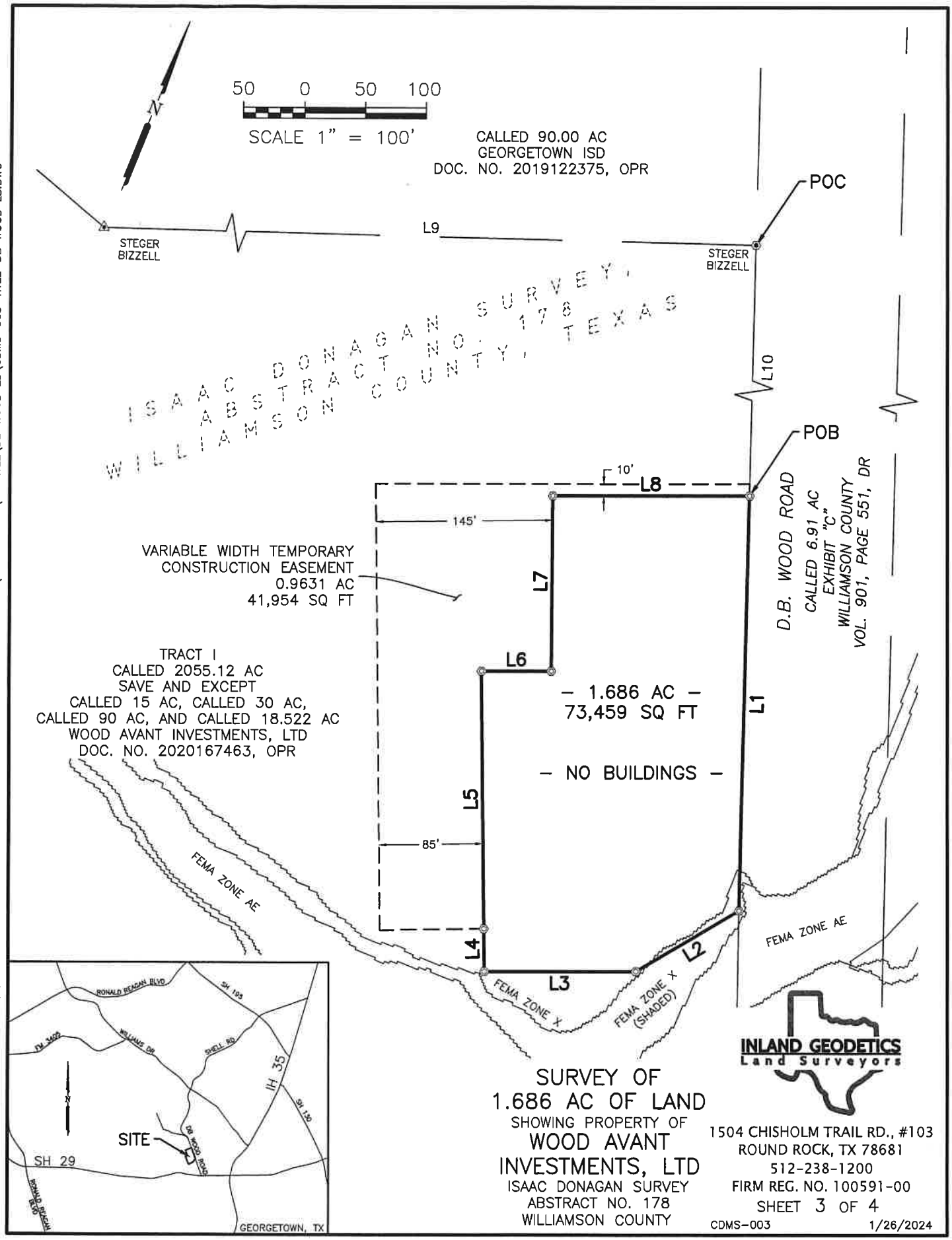

SURVEY OF
1.686 AC OF LAND
SHOWING PROPERTY OF
WOOD AVANT
INVESTMENTS, LTD
ISAAC DONAGAN SURVEY
ABSTRACT NO. 178
WILLIAMSON COUNTY

1504 CHISHOLM TRAIL RD., #103
ROUND ROCK, TX 78681
512-238-1200
FIRM REG. NO. 100591-00

SHEET 3 OF 4

CDMS-003 1/26/2024

BB P:\PROJECTS\CDM SMITH (CDMS)\CDMS-003 - S. LAKE WTP TO SF INTERCEPTOR WW SYST EXPANSION\4-DRAWINGS\LS TITLE\DB WOOD LS\CDMS-003-TITLE-DB WOOD LS.DWG

EXHIBIT _____

NOTES:

1. BEARINGS ARE BASED ON THE TEXAS COORDINATE SYSTEM OF 1983, CENTRAL ZONE (NAD_83 (2011)). ALL DISTANCES SHOWN HEREON ARE SURFACE VALUES REPRESENTED IN U.S. SURVEY FEET BASED ON A SURFACE-TO-GRID COMBINED ADJUSTMENT FACTOR OF 0.9998673234.

2. THIS SURVEY WAS MADE WITHOUT THE BENEFIT OF AN ABSTRACT OF TITLE NOR A TITLE COMMITMENT OR TITLE POLICY. THERE MAY BE ADDITIONAL EASEMENTS OR RESTRICTIONS, NOT SHOWN HEREON, WHICH MAY AFFECT THE PROPERTY.

3. THE SYMBOLS REFLECTED IN THE LEGEND AND ON THIS SURVEY MAY HAVE BEEN ENLARGED FOR CLARITY. THE SYMBOLS HAVE BEEN PLOTTED AT THE CENTER OF THE FIELD LOCATION AND MAY NOT REPRESENT THE ACTUAL SIZE OR SHAPE OF THE FEATURE.

4. UTILITY INFORMATION SHOWN HEREON CONSTITUTES FIELD RECOVERY OF OBSERVED EVIDENCE OF UTILITIES. LOCATIONS OF UNDERGROUND UTILITIES/STRUCTURES MAY VARY FROM LOCATIONS SHOWN HEREON. ADDITIONAL BURIED UTILITIES/STRUCTURES, SUCH AS ELECTRICAL, TELEPHONE, CABLE TV AND PIPELINES, MAY BE ENCOUNTERED. NO EXCAVATIONS WERE MADE DURING THE PROGRESS OF THIS SURVEY TO LOCATE BURIED UTILITIES/STRUCTURES. FOR INFORMATION REGARDING BURIED UTILITIES/STRUCTURES OR BEFORE ANY EXCAVATION IS BEGUN, CONTACT THE APPROPRIATE AGENCIES FOR VERIFICATION OF UTILITY TYPE AND FOR FIELD LOCATION.

5. BY GRAPHIC PLOTTING ONLY, THIS PROPERTY IS IN ZONE X (NOT SHADED) – AREAS DETERMINED TO BE OUTSIDE THE 0.2% ANNUAL CHANCE FLOODPLAIN AS DEFINED BY THE FEDERAL EMERGENCY MANAGEMENT AGENCY AND ZONE X (SHADED) – AREAS OF 0.2% ANNUAL CHANCE FLOOD; AREAS OF 1% ANNUAL CHANCE FLOOD WITH AVERAGE DEPTHS OF LESS THAN 1 FOOT OR WITH DRAINAGE AREAS LESS THAN 1 SQUARE MILE; AND AREAS PROTECTED BY LEVEES FROM 1% ANNUAL CHANCE FLOOD / SPECIAL FLOOD HAZARD ZONE A – NO BASE FLOOD ELEVATIONS DETERMINED, FLOOD INSURANCE RATE MAP, COMMUNITY PANEL NO. 48491C0290E, THAT BEARS AN EFFECTIVE/REVISED DATE OF 9/26/2008. THE SURVEYOR MAKES NO ASSURANCE AS TO THE ACCURACY OF THE DELINEATIONS SHOWN ON THE FEDERAL EMERGENCY MANAGEMENT AGENCY FLOOD INSURANCE RATE MAP. THIS STATEMENT IS FOR INSURANCE PURPOSES ONLY AND IS NOT AN OPINION THAT THE PROPERTY WILL OR WILL NOT FLOOD. A FLOOD STUDY WAS NOT CONDUCTED ON THE PROPERTY.

6. THE USE OF THE WORD CERTIFY OR CERTIFICATION ON THIS DOCUMENT ONLY CONSTITUTES AN EXPRESSION OF PROFESSIONAL OPINION REGARDING THOSE FACTS OR FINDINGS WHICH ARE THE SUBJECT OF THE CERTIFICATION, AND DOES NOT CONSTITUTE A WARRANTY OR GUARANTEE, EITHER EXPRESSED OR IMPLIED.

7. THE FOREGOING MAP AND SURVEY ON WHICH IT IS BASED IS ACCOMPANIED BY AND A PART OF SEPARATE METES AND BOUND DESCRIPTION OF THE SUBJECT TRACT.

LINE	BEARING	DISTANCE
L1	S 20°25'32" E	341.88'
L2	S 37°25'56" W	97.76'
L3	S 68°08'36" W	124.97'
L4	N 22°25'16" W	35.00'
L5	N 22°25'16" W	212.26'
L6	N 68°08'40" E	57.72'
L7	N 21°21'40" W	144.46'
L8	N 68°08'40" E	161.02'
L9	S 69°34'34" W	1018.53'
L10	S 20°25'32" E	825.81'

LEGEND

●	IRON ROD FOUND 1/2" IN DIAMETER OR OTHERWISE NOTED
◉	IRON ROD FOUND 1/2" IN DIAMETER W/CAP STAMP NOTED
◎	IRON ROD SET 1/2" STAMPED "INLAND GEODETICS"
R.O.W.	RIGHT OF WAY
POB	POINT OF BEGINNING
POC	POINT OF COMMENCING
DR	DEED RECORDS OF WILLIAMSON COUNTY, TEXAS
OPR	OFFICIAL PUBLIC RECORDS OF WILLIAMSON COUNTY, TEXAS

THIS IS TO CERTIFY THAT THIS SURVEY WAS MADE ON THE GROUND FEBRUARY THROUGH OCTOBER, 2023, BY ME OR UNDER MY SUPERVISION, THAT THIS SURVEY PLAT REPRESENTS THE FACTS FOUND AT THE TIME OF THE SURVEY.

INLAND GEODETICS

MIGUEL A. ESCOBAR, L.S.L.S., R.P.L.S.
TEXAS REG. NO. 5630

STATE OF TEXAS
REGISTERED
MIGUEL ANGEL ESCOBAR
5630
PROFESSIONAL
LAND SURVEYOR

SURVEY OF
1.686 AC OF LAND
SHOWING PROPERTY OF
WOOD AVANT
INVESTMENTS, LTD
ISAAC DONAGAN SURVEY
ABSTRACT NO. 178
WILLIAMSON COUNTY

INLAND GEODETICS
Land Surveyors

1504 CHISHOLM TRAIL RD., #103
ROUND ROCK, TX 78681
512-238-1200
FIRM REG. NO. 100591-00
SHEET 4 OF 4
CDMS-003 1/26/2024

BB P:\PROJECTS\CDM SMITH (CDMS)\CDMS-003 - S. LAKE WTP TO SF INTERCEPTOR WW SYST EXPANSION\4-DRAWINGS\LS TITLE\DB WOOD LS\CDMS-003-TITLE-DB WOOD LS.DWG

Easement/Possession and Use Agreement

South Lake to South Fork Wastewater Improvements – Gravity and Force Mains
Georgetown, TX

Easement

P1 – Wood Avant Investments, LTD

Exhibit " "
3.270 Acres (142,452 Square Feet)
Joseph Fish Survey, Abstract No. 232
Williamson County, Texas

DESCRIPTION OF EASEMENT

DESCRIPTION OF A 3.270 ACRE (142,452 SQUARE FOOT) TRACT OF LAND, LOCATED IN THE JOSEPH FISH SURVEY, ABSTRACT NO. 232, WILLIAMSON COUNTY, TEXAS, BEING A PORTION OF THAT CERTAIN CALLED 2055.12 ACRE TRACT OF LAND, SAVE AND EXCEPT A CALLED 15 ACRE TRACT OF LAND, A CALLED 30 ACRE TRACT OF LAND, A CALLED 90 ACRE TRACT OF LAND, AND A CALLED 18.522 ACRE TRACT OF LAND, DESCRIBED AS "TRACT I" IN A SPECIAL WARRANTY DEED TO WOOD AVANT INVESTMENTS, LTD OF RECORD IN DOCUMENT NO. 2020167463, OF THE OFFICIAL PUBLIC RECORDS OF WILLIAMSON COUNTY, TEXAS, AND SUBJECT TO AN AFFIDAVIT OF CORRECTION RECORDED IN DOCUMENT NO. 2021014531, OF SAID OFFICIAL PUBLIC RECORDS, SAID 3.270 ACRE (142,452 SQUARE FOOT) TRACT OF LAND BEING SURVEYED ON THE GROUND IN FEBRUARY THROUGH OCTOBER, 2023, UNDER THE DIRECT SUPERVISION OF MIGUEL A. ESCOBAR, LSLS, RPLS, AND BEING MORE PARTICULARLY DESCRIBED BY METES AND BOUNDS AS FOLLOWS:

COMMENCING at a 60D nail found in the east boundary line of said Tract I, on the west boundary line of a called 249.00 acre tract of land described as "Tract 105-1" in a Declaration of Taking to the United States of America of Record in Volume 550, Page 553, of the Deed Records of Williamson County, Texas, and the west right-of-way line of Cedar Breaks Road, a 120 foot wide road easement, being a called 11.158 acre right-of-way, described to the City of Georgetown of Record in Document No. 2015073475, of said Official Public Records, for the southeast corner of Crockett Gardens Road, an 80 foot wide perpetual road easement, described as "Parcel 8" in a Deed Without Warranty to Williamson County of Record in Volume 715, Page 121, of said Deed Records, from which point, a 1/2-inch iron rod with cap stamped "5050" found in the north line of said Crockett Gardens Road bears South 81°29'04" West, a distance of 154.80 feet;

THENCE, South 50°24'11" West, with the south line of said 80 foot wide road easement, a distance of 10.46 feet to a calculated point for the northeast corner and **POINT OF BEGINNING** of the herein described tract;

THENCE, over and across the interior of said Tract I, the following eight (8) courses:

(1) **South 22°28'28" East**, a distance of **1043.99 feet** to a calculated angle point;

(2) **South 16°51'40" West**, a distance of **182.00 feet** to a calculated angle point;

(3) **South 55°48'44" East**, a distance of **209.92 feet** to a calculated angle point, from which point, a concrete monument found in said common boundary line of Tract I, Tract 105-1, and west right-of-way line of Cedar Breaks Road bears South 61°13'36" East, a distance of 16.71 feet;

(4) **South 22°28'28" East**, a distance of **1361.48 feet** to a calculated angle point;

(5) **South 73°40'06" East**, a distance of **918.81 feet** to a calculated angle point;

(6) **South 66°53'37" East**, a distance of **432.56 feet** to a calculated angle point;

(7) **South 60°08'37" East**, a distance of **407.21 feet** to a point of curvature for a curve to the left;

(8) With said curve to the left, having a radius of **1502.68 feet**, a central angle of **06°58'10"**, an arc length of **182.78 feet**, a chord bearing of **South 63°37'54" East**, and a chord length of **182.67 feet** to a calculated point in the west boundary line of a called 0.5191 acre tract of land described in a Possession and Use Agreement for Utility Purposes to the City of Georgetown in Document No. 2024016860, of said Official Public Records, for the southeast corner of the herein described tract, from which point, a 1/2-inch iron rod with cap stamped "INLAND GEODETICS" previously set for the northwest corner of said 0.5191 acre tract bears North 24°29'26" East, a distance of 10.00 feet;

(9) **THENCE, South 24°29'26" West**, with the west boundary line of said 0.5191 acre tract, a distance of **30.01 feet**, to a calculated point at the beginning of a non-tangent curve to the right for the southwest corner of the herein described tract, from which point, a 1/2-inch iron rod with cap stamped "INLAND GEODETICS" previously set for the southwest corner of said 0.5191 acre tract bears South 24°29'26" West, a distance of 100.98 feet;

THENCE, over and across the interior of said Tract I, the following eight (8) courses and distances:

(10) With said curve to the right, having a radius of **1532.69 feet**, a central angle of **06°56'17"**, an arc length of **185.60 feet**, a chord bearing of **North 63°36'58" West**, and a chord length of **185.48 feet**, to a calculated point of tangency;

(11) **North 60°08'37" West**, a distance of **405.44 feet** to a calculated angle point;

(12) **North 66°53'37" West**, a distance of **429.01 feet** to a calculated angle point;

(13) **North 73°40'06" West**, a distance of **931.41 feet** to a calculated angle point;

(14) **North 22°28'28" West**, a distance of **1366.87 feet** to a calculated angle point;

(15) **North 55°48'44" West**, a distance of **223.00 feet** to a calculated angle point;

(16) **North 16°51'40" East**, a distance of **193.35 feet** to a calculated angle point;

(17) **North 22°28'28" West**, a distance of **1024.02 feet** to a calculated point for the northwest corner of the herein described tract;

(18) THENCE, North 50°24'11" East, with said south right-of-way line of Crockett Gardens, a distance of **31.39 feet**, to the **POINT OF BEGINNING** and containing 3.270 acres (142,452 Square Feet) of land, more or less, within these metes and bounds.

Bearings are based on the Texas Coordinate System of 1983, Central Zone, NAD 83(2011). All distances are surface values represented in US Survey Feet based on a Surface-to-Grid Combined Adjustment Factor of 0.9998673234.

The subject tract shown hereon is an easement, monuments were not set for corners.

Together with a 70 foot wide (7.685 acres, 334,738 Sq.Ft.) Temporary Construction Easement being adjacent to, parallel with, and southerly/westerly to course 10 through 17, as shown on the attached survey map of the subject tract.

The foregoing metes and bounds description, and survey on which it was based, is accompanied by and a part of a survey map of the subject tract.

That I, Miguel A. Escobar, a Registered Professional Land Surveyor, do hereby certify that the above description and the accompanying sketch is true and correct to the best of my knowledge and belief and the property described herein was determined by a survey made on the ground during the months of February through October, 2023, under my direct supervision.

WITNESS MY HAND AND SEAL at Round Rock, Williamson County, Texas on this 2nd of May, 2024, A.D.

INLAND GEODETICS

Miguel A. Escobar, L.S.L.S., R.P.L.S.
Texas Reg. No. 5630
1504 Chisholm Trail Rd #103
Round Rock, TX 78681
TBPELS Firm No. 10059100

P:\Projects\CDM Smith (CDMS)\CDMS-003 - S. Lake WTP To SF Interceptor WW Syst Expansion\5-Descriptions-Reports\ESMT\PART 1\CDMS-003-DESCRIPTION-ESMT-P1.docx

EXHIBIT _____

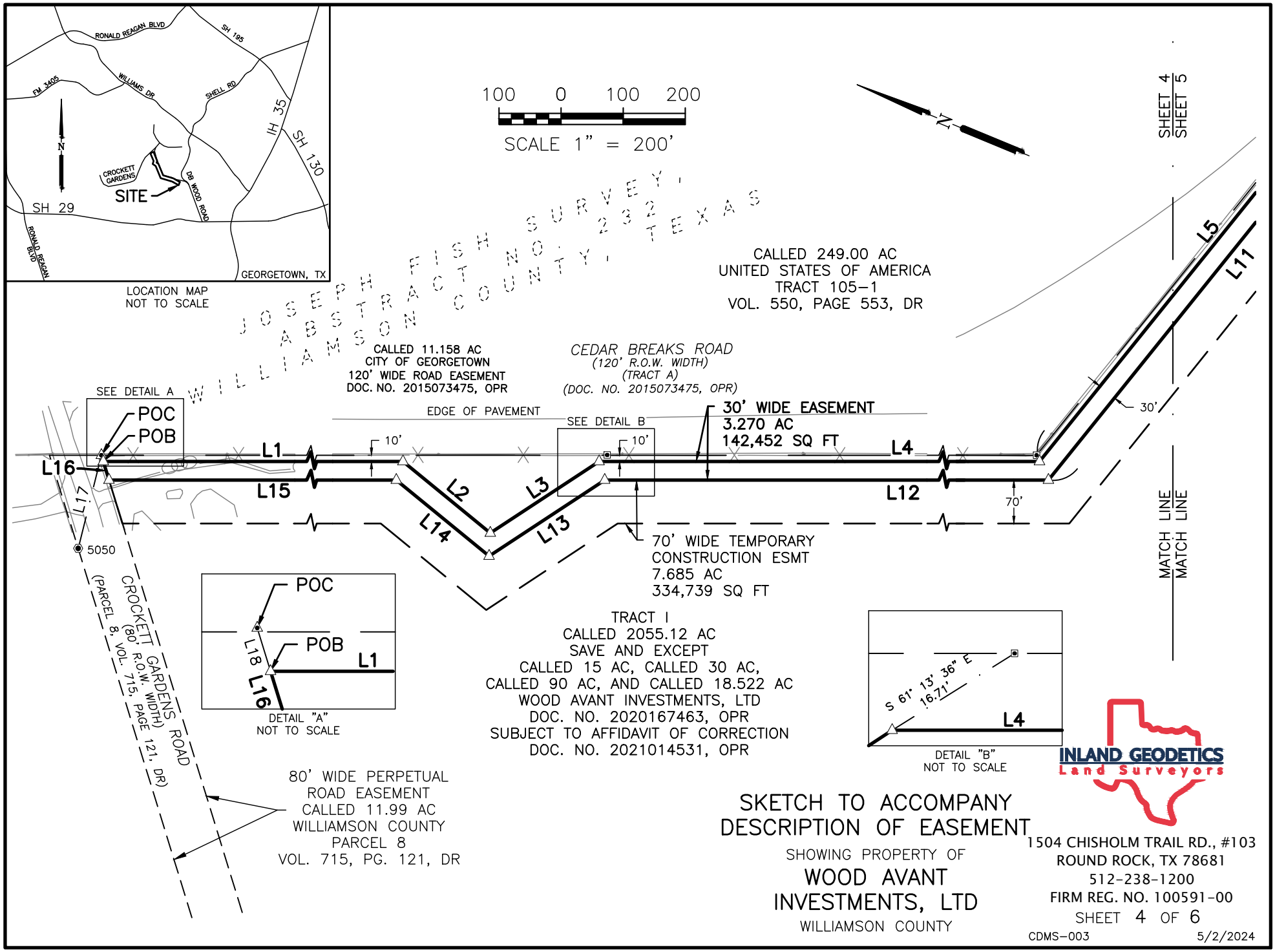

SKETCH TO ACCOMPANY DESCRIPTION OF EASEMENT

SHOWING PROPERTY OF

WOOD AVANT INVESTMENTS, LTD

WILLIAMSON COUNTY

1504 CHISHOLM TRAIL RD., #103
ROUND ROCK, TX 78681
512-238-1200
FIRM REG. NO. 100591-00

SHEET 4 OF 6

CDMS-003 5/2/2024

P:\PROJECTS\CDM SMITH (CDMS)\CDMS-003 - S. LAKE WTP TO SF INTERCEPTOR WW SYST EXPANSION\4-DRAWINGS\ESMT\CDMS-003-ESMT P1-S LAKE TO S FORK INTERCEPTOR.DWG

BB

EXHIBIT _____

CURVE	RADIUS	DELTA ANGLE	ARC LENGTH	CHORD BEARING	CHORD LENGTH
C1	1502.68'	6°58'10"	182.79'	S 63° 37' 54" E	182.67'
C2	1532.69'	6°56'17"	185.60'	N 63° 36' 58" W	185.48'

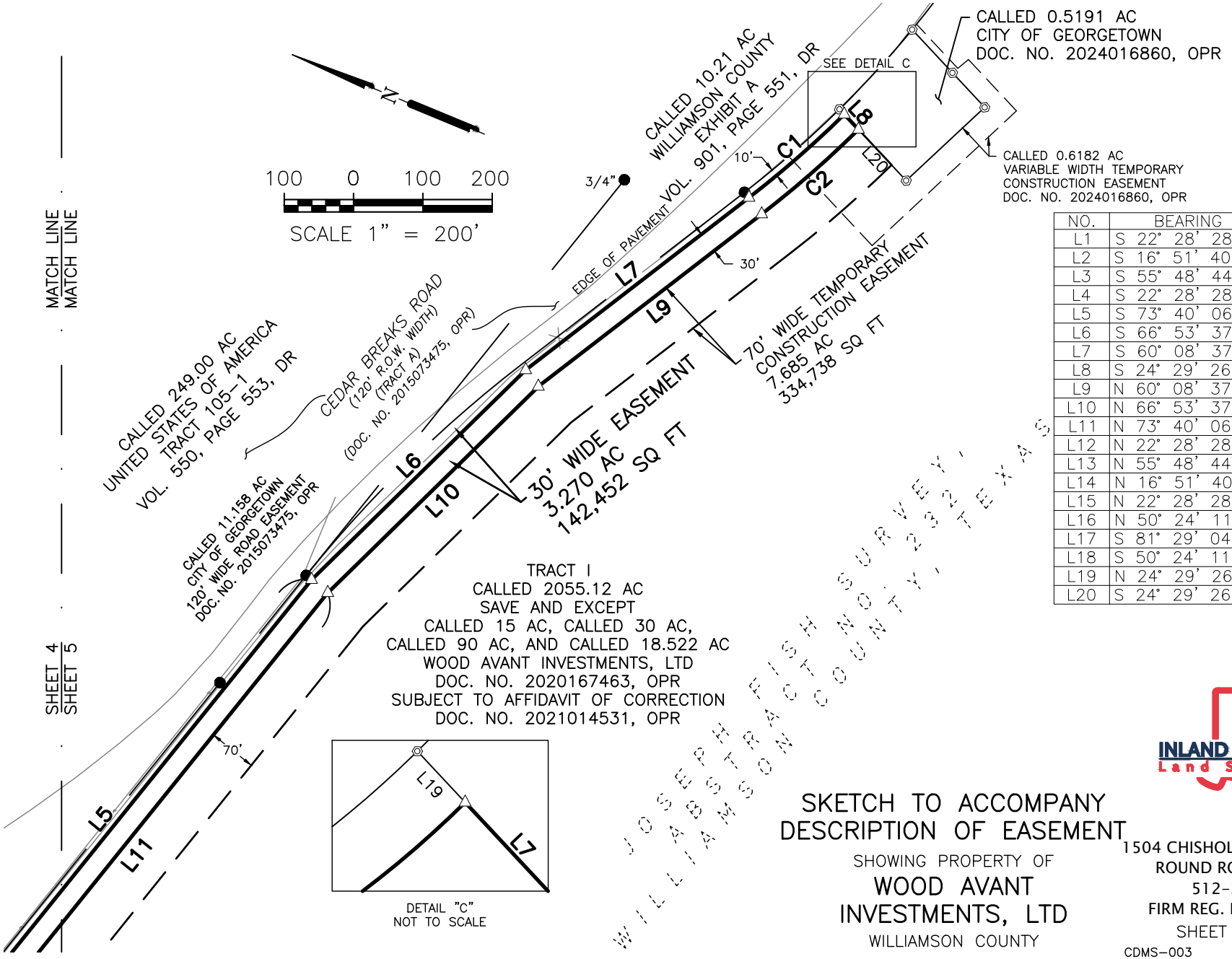

NO.	BEARING	DISTANCE
L1	S 22° 28' 28" E	1043.99'
L2	S 16° 51' 40" W	182.00'
L3	S 55° 48' 44" E	209.92'
L4	S 22° 28' 28" E	1361.48'
L5	S 73° 40' 06" E	918.81'
L6	S 66° 53' 37" E	432.56'
L7	S 60° 08' 37" E	407.21'
L8	S 24° 29' 26" W	30.01'
L9	N 60° 08' 37" W	405.44'
L10	N 66° 53' 37" W	429.01'
L11	N 73° 40' 06" W	931.41'
L12	N 22° 28' 28" W	1366.87'
L13	N 55° 48' 44" W	223.00'
L14	N 16° 51' 40" E	193.35'
L15	N 22° 28' 28" W	1024.02'
L16	N 50° 24' 11" E	31.39'
L17	S 81° 29' 04" W	154.80'
L18	S 50° 24' 11" W	10.46'
L19	N 24° 29' 26" E	10.00'
L20	S 24° 29' 26" W	100.98'

SKETCH TO ACCOMPANY DESCRIPTION OF EASEMENT

SHOWING PROPERTY OF

WOOD AVANT INVESTMENTS, LTD

WILLIAMSON COUNTY

INLAND GEODETICS
Land Surveyors
1504 CHISHOLM TRAIL RD., #103
ROUND ROCK, TX 78681
512-238-1200
FIRM REG. NO. 100591-00

SHEET 5 OF 6

CDMS-003 5/2/2024

BB P:\PROJECTS\CDM SMITH (CDMS)\CDMS-003 - S. LAKE WTP TO SF INTERCEPTOR WW SYST EXPANSION\4-DRAWINGS\ESMT\CDMS-003-ESMT P1-S LAKE TO S FORK INTERCEPTOR.DWG

EXHIBIT _____

LEGEND

●	IRON ROD FOUND 1/2" IN DIAMETER OR OTHERWISE NOTED
◉	IRON ROD FOUND 1/2" IN DIAMETER W/CAP STAMP NOTED
◎	IRON ROD 1/2" IN DIAMETER SET W/CAP STAMP "INLAND GEODETICS"
△	CALCULATED POINT
✪	COTTON GIN SPINDLE W/WASHER NOTED
▣	CONCRETE MONUMENT WITH DISK FOUND
◭	60D NAIL FOUND
R.O.W.	RIGHT OF WAY
POB	POINT OF BEGINNING
POC	POINT OF COMMENCING
DR	DEED RECORDS OF WILLIAMSON COUNTY, TEXAS
OPR	OFFICIAL PUBLIC RECORDS OF WILLIAMSON COUNTY, TEXAS
——X——	WIRE FENCE
——OOO——	CHAIN LINK FENCE

NOTES:

1. BEARINGS ARE BASED ON THE TEXAS COORDINATE SYSTEM OF 1983, CENTRAL ZONE, NAD83 (2011). ALL DISTANCES SHOWN HEREON ARE SURFACE VALUES REPRESENTED IN U.S. SURVEY FEET BASED ON A SURFACE-TO-GRID COMBINED ADJUSTMENT FACTOR OF 0.9998673234.
2. THIS SURVEY WAS MADE WITHOUT THE BENEFIT OF AN ABSTRACT OF TITLE NOR A TITLE COMMITMENT OR TITLE POLICY. THERE MAY BE ADDITIONAL EASEMENTS OR RESTRICTIONS, NOT SHOWN HEREON, WHICH MAY AFFECT THE PROPERTY.
3. REFERENCE IS HEREON MADE TO THE METES AND BOUNDS DESCRIPTION OF THIS TRACT ACCOMPANYING THIS SKETCH.
4. THE SUBJECT TRACT SHOWN HEREON IS AN EASEMENT, MONUMENTS WERE NOT SET FOR CORNERS.

THIS IS TO CERTIFY THAT THIS SURVEY WAS MADE ON THE GROUND IN FEBRUARY THROUGH OCTOBER, 2023, BY ME OR UNDER MY SUPERVISION, THAT THIS SURVEY PLAT REPRESENTS THE FACTS FOUND AT THE TIME OF THE SURVEY.

INLAND GEODETICS

MIGUEL A. ESCOBAR, L.S.L.S., R.P.L.S.
TEXAS REG. NO. 5630

STATE OF TEXAS
REGISTERED
MIGUEL ANGEL ESCOBAR
5630
PROFESSIONAL
LAND SURVEYOR

SKETCH TO ACCOMPANY DESCRIPTION OF EASEMENT

SHOWING PROPERTY OF

WOOD AVANT INVESTMENTS, LTD

WILLIAMSON COUNTY

INLAND GEODETICS
Land Surveyors
1504 CHISHOLM TRAIL RD., #103
ROUND ROCK, TX 78681
512-238-1200
FIRM REG. NO. 100591-00

SHEET 6 OF 6

CDMS-003 5/2/2024

P:\PROJECTS\CDM SMITH (CDMS)\CDMS-003 - S. LAKE WTP TO SF INTERCEPTOR WW SYST EXPANSION\4-DRAWINGS\ESMT\CDMS-003-ESMT P1-S LAKE TO S FORK INTERCEPTOR.DWG

BB

Temporary Construction Easement

P1 – Wood Avant Investments, LTD

Exhibit " "
2.514 Acres (109,497 Square Feet)
Joseph Fish Survey, Abstract No. 232
Isaac Donagan Survey, Abstract No. 178
Williamson County, Texas

DESCRIPTION OF EASEMENT

DESCRIPTION OF A 2.514 ACRE (109,497 SQUARE FOOT) TRACT OF LAND, LOCATED IN THE JOSEPH FISH SURVEY, ABSTRACT NO. 232, AND THE ISAAC DONAGAN SURVEY, ABSTRACT NO. 178, WILLIAMSON COUNTY, TEXAS, BEING A PORTION OF THAT CERTAIN CALLED 2055.12 ACRE TRACT OF LAND, SAVE AND EXCEPT A CALLED 15 ACRE TRACT OF LAND, A CALLED 30 ACRE TRACT OF LAND, A CALLED 90 ACRE TRACT OF LAND, AND A CALLED 18.522 ACRE TRACT OF LAND, DESCRIBED AS TRACT I IN A SPECIAL WARRANTY DEED TO WOOD AVANT INVESTMENTS, LTD OF RECORD IN DOCUMENT NO. 2020167463, OF THE OFFICIAL PUBLIC RECORDS OF WILLIAMSON COUNTY, TEXAS, AND SUBJECT TO AFFIDAVIT OF CORRECTION RECORDED IN DOCUMENT NO. 2021014531, OF SAID OFFICIAL PUBLIC RECORDS, SAID 2.514 ACRE (109,497 SQUARE FOOT) TRACT OF LAND BEING SURVEYED ON THE GROUND IN FEBRUARY THROUGH NOVEMBER, 2023, UNDER THE DIRECT SUPERVISION OF MIGUEL A. ESCOBAR, LSLS, RPLS, AND BEING MORE PARTICULARLY DESCRIBED BY METES AND BOUNDS AS FOLLOWS:

BEGINNING at a 1/2-inch iron rod with cap stamped “STEGER BIZZELL” found for the southwest corner of that certain called 90.00 acre tract of land described as Tract 2 in a Special Warranty Deed with Use Restriction to Georgetown Independent School District of record in Document No. 2019122375, said Official Public Records, for an interior angle point and POINT OF BEGINNING of the herein described tract;

THENCE, with the southwesterly line of said Tract 2, the following eight (8) courses:

(1) North 69°48'30" East, a distance of **38.92 feet** to a calculated angle point;
(2) South 84°45'40" East, a distance of **145.76 feet** to a calculated angle point;
(3) South 74°44'31" East, a distance of **110.94 feet** to a calculated angle point;
(4) South 58°02'31" East, a distance of **206.31 feet** to a calculated angle point;
(5) South 39°08'59" East, a distance of **182.47 feet** to a calculated angle point;
(6) South 80°54'01" East, a distance of **151.91 feet** to a calculated angle point;
(7) South 45°57'08" East, a distance of **137.17 feet** to a calculated angle point;
(8) South 39°57'20" East, a distance of **29.44 feet** to a calculated point at a northerly corner of a proposed variable width (9.423 acres) wastewater easement for the northeast corner of the herein described tract;

THENCE, with a northeasterly line of said proposed variable width (9.423 acres) wastewater easement, the following six (6) courses:

(9) **South 39°49'14" West**, a distance of **95.11 feet** to a calculated point for the southeast corner of the herein described tract;
(10) **North 51°29'22" West**, a distance of **548.96 feet** to a calculated angle point;
(11) **North 69°54'31" West**, a distance of **389.75 feet** to a calculated point for the southerly southwest corner of the herein described tract;
(12) **North 09°49'07" East**, a distance of **158.97 feet** to a calculated angle point;
(13) **North 80°39'44" West**, a distance of **142.32 feet** to a calculated point for the westerly southwest corner of the herein described tract;
(14) **North 09°55'11" East**, a distance of **426.16 feet** to a calculated point at an angle point of the aforementioned proposed variable width (9.423 acres) wastewater easement for the northwest corner of the herein described tract;

THENCE, over and across the interior of the aforementioned Tract I, the following three (3) courses:

(15) **South 79°18'48" East**, a distance of **70.01 feet** to a calculated angle point;
(16) **South 09°55'11" West**, a distance of **354.51 feet** to a calculated angle point;
(17) **South 80°39'44" East**, a distance of **78.91 feet** to a calculated point in the northwesterly boundary line of the aforementioned Tract 2, from which point a 1/2-inch iron rod with cap stamped "STEGER BIZZELL" found in said northwesterly line of Tract 2, for the southeast corner of that certain called 15.00 tract of land described in a Special Warranty Deed with Use Restriction to Georgetown Independent School District of record in Document No. 2019122376, of said Official Public Records, bears North 09°50'11" East, a distance of 491.15 feet;

(18) THENCE, South 09°50'11" West, with said northwesterly line of Tract 2, a distance of **208.51 feet** to the **POINT OF BEGINNING** and containing 2.514 acres of land, more or less, within these metes and bounds.

Bearings are based on the Texas Coordinate System of 1983, Central Zone, NAD 83 (2011). All distances are surface values represented in US Survey Feet based on a Surface-to-Grid Combined Adjustment Factor of 0.9998673234.

The use of the word "certify" or "certification" on this document only constitutes an expression of professional opinion regarding those facts or findings which are the subject of the certification, and does not constitute a warranty or guarantee, either expressed or implied.

The subject tract shown hereon is an easement, monuments were not set for corners.

The foregoing metes and bounds description, and survey on which it was based, is accompanied by and a part of a survey map of the subject tract.

That I, Miguel A. Escobar, a Registered Professional Land Surveyor, do hereby certify that the above description and the accompanying sketch is true and correct to the best of my knowledge and belief and the property described herein was determined by a survey made on the ground during the months of February through November, 2023, under my direct supervision.

WITNESS MY HAND AND SEAL at Round Rock, Williamson County, Texas on this 2nd of May, 2024, A.D.

INLAND GEODETICS

STATE OF TEXAS
REGISTERED
MIGUEL ANGEL ESCOBAR
5630
PROFESSIONAL
LAND SURVEYOR

Miguel A. Escobar, L.S.L.S., R.P.L.S.
Texas Reg. No. 5630
1504 Chisholm Trail Rd #103
Round Rock, TX 78681
TBPELS Firm No. 10059100

P:\Projects\CDM Smith (CDMS)\CDMS-003 - S. Lake WTP To SF Interceptor WW Syst Expansion\5-Descriptions-Reports\ESMT\TCE PART 2-WOOD AVANT INVESTMENTS LTD\CDMS-003-TCE P2-WOOD AVANT INVESTMENTS LTD.docx

EXHIBIT _____

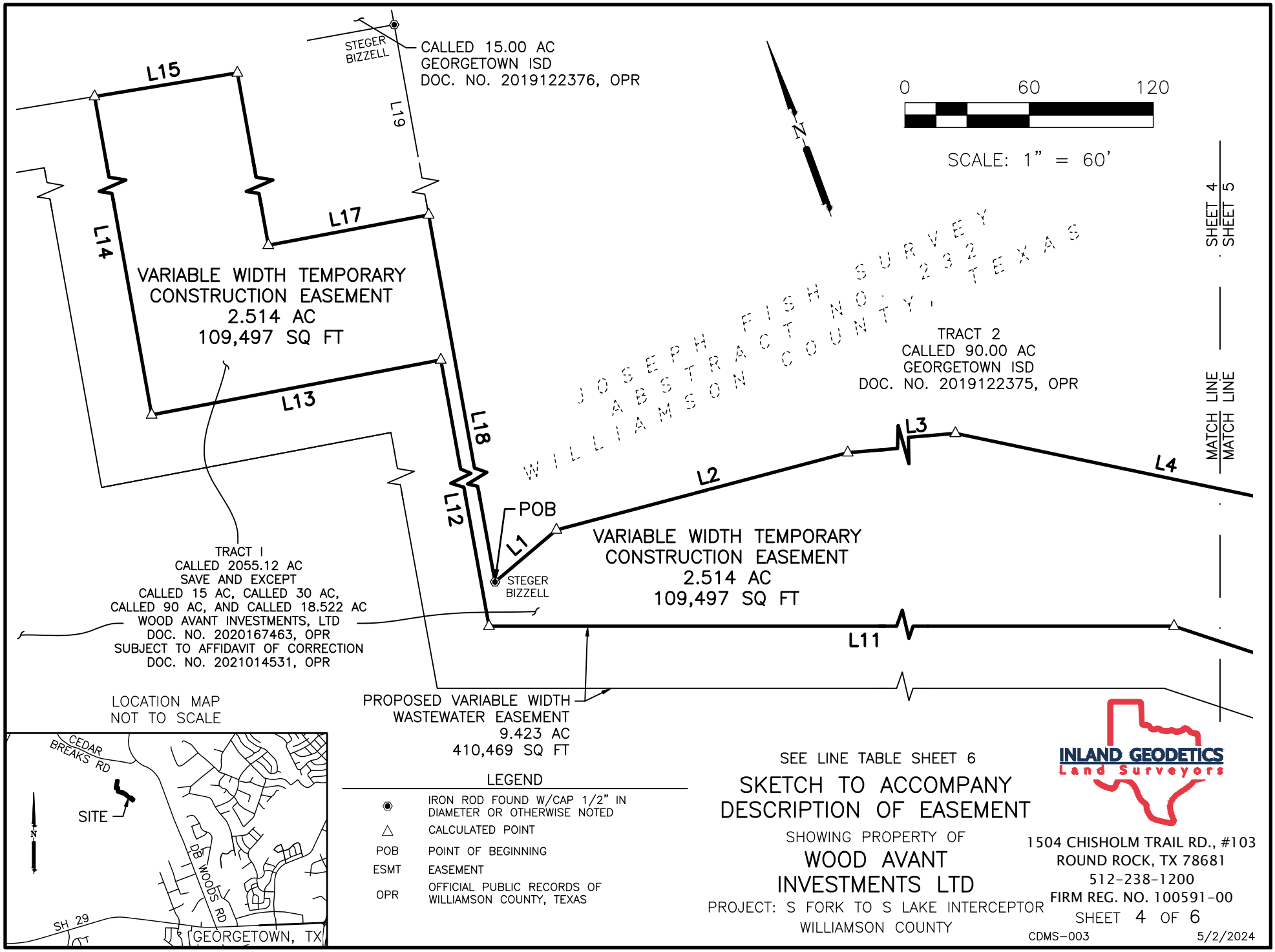

LEGEND

◉	IRON ROD FOUND W/CAP 1/2" IN DIAMETER OR OTHERWISE NOTED
△	CALCULATED POINT
POB	POINT OF BEGINNING
ESMT	EASEMENT
OPR	OFFICIAL PUBLIC RECORDS OF WILLIAMSON COUNTY, TEXAS

SEE LINE TABLE SHEET 6

SKETCH TO ACCOMPANY DESCRIPTION OF EASEMENT

SHOWING PROPERTY OF

WOOD AVANT INVESTMENTS LTD

PROJECT: S FORK TO S LAKE INTERCEPTOR
WILLIAMSON COUNTY

INLAND GEODETICS
Land Surveyors
1504 CHISHOLM TRAIL RD., #103
ROUND ROCK, TX 78681
512-238-1200
FIRM REG. NO. 100591-00

SHEET 4 OF 6

CDMS-003 5/2/2024

P:\PROJECTS\CDM SMITH (CDMS)\CDMS-003 - S. LAKE WTP TO SF INTERCEPTOR WW SYST EXPANSION\4-DRAWINGS\ESMT\CDMS-003-TCE P1-WOOD AVANT INVESTMENTS LTD.DWG

BB

EXHIBIT _____

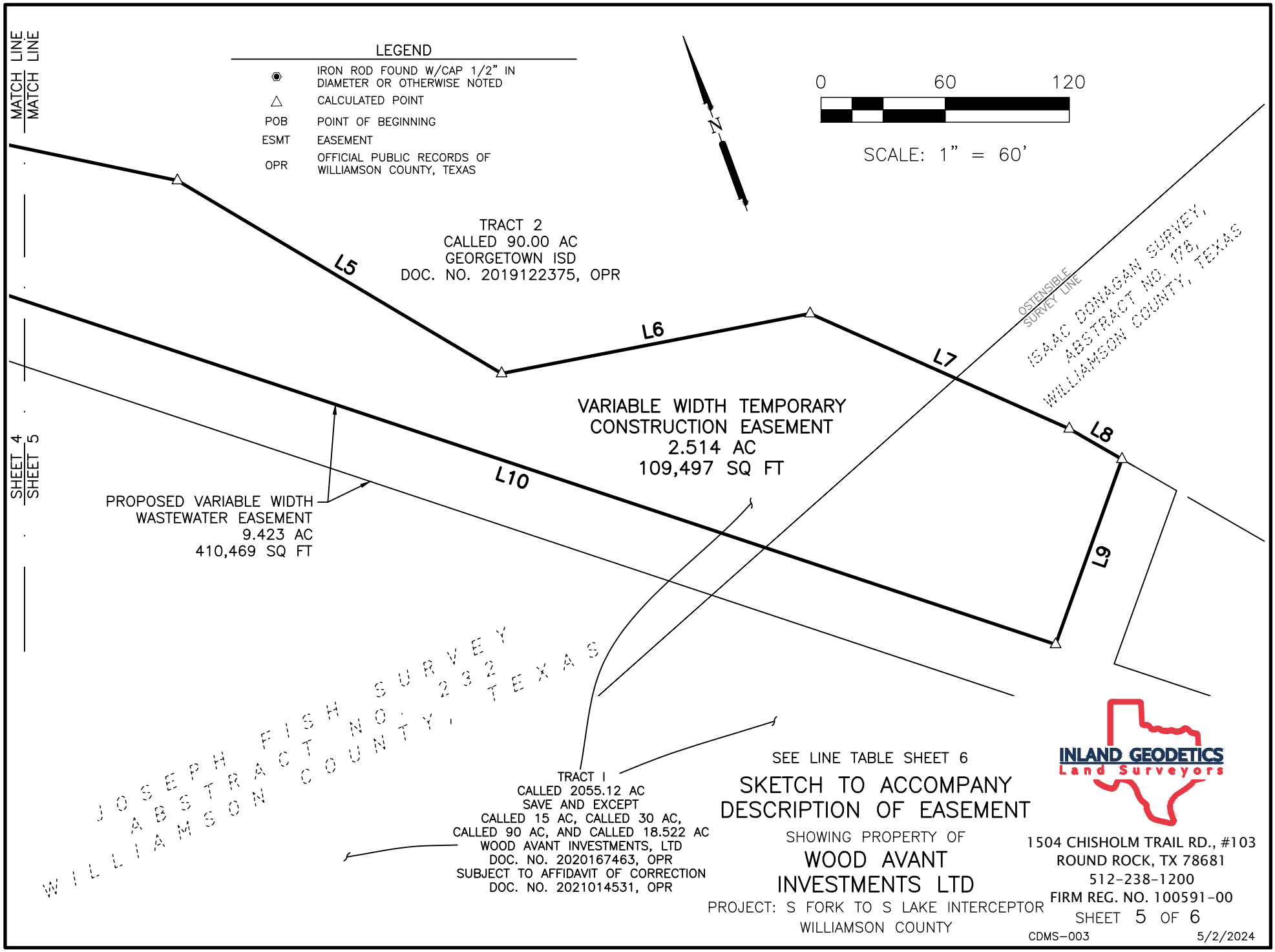

SEE LINE TABLE SHEET 6

SKETCH TO ACCOMPANY DESCRIPTION OF EASEMENT

SHOWING PROPERTY OF

WOOD AVANT INVESTMENTS LTD

PROJECT: S FORK TO S LAKE INTERCEPTOR
WILLIAMSON COUNTY

INLAND GEODETICS
Land Surveyors

1504 CHISHOLM TRAIL RD., #103
ROUND ROCK, TX 78681
512-238-1200
FIRM REG. NO. 100591-00

SHEET 5 OF 6

CDMS-003 5/2/2024

BB P:\PROJECTS\CDM SMITH (CDMS)\CDMS-003 - S. LAKE WTP TO SF INTERCEPTOR WW SYST EXPANSION\4-DRAWINGS\ESMT\CDMS-003-TCE P1-WOOD AVANT INVESTMENTS LTD.DWG

EXHIBIT _____

NO.	BEARING	DISTANCE
L1	N 69° 48' 30" E	38.92'
L2	S 84° 45' 40" E	145.76'
L3	S 74° 44' 31" E	110.94'
L4	S 58° 02' 31" E	206.31'
L5	S 39° 08' 59" E	182.47'
L6	S 80° 54' 01" E	151.91'
L7	S 45° 57' 08" E	137.17'
L8	S 39° 57' 20" E	29.44'
L9	S 39° 49' 14" W	95.11'
L10	N 51° 29' 22" W	548.96'
L11	N 69° 54' 31" W	389.75'
L12	N 09° 49' 07" E	158.97'
L13	N 80° 39' 44" W	142.32'
L14	N 09° 55' 11" E	426.16'
L15	S 79° 18' 48" E	70.01'
L16	S 09° 55' 11" W	354.51'
L17	S 80° 39' 44" E	78.91'
L18	S 09° 50' 11" W	208.51'
L19	N 09° 50' 11" E	491.15'

NOTES:

1. BEARINGS ARE BASED ON THE TEXAS COORDINATE SYSTEM OF 1983, CENTRAL ZONE, NAD83 (2011). ALL DISTANCES SHOWN HEREON ARE SURFACE VALUES REPRESENTED IN U.S. SURVEY FEET BASED ON A SURFACE-TO-GRID COMBINED ADJUSTMENT FACTOR OF 0.9998673234.

2. REFERENCE IS HEREON MADE TO THE METES AND BOUNDS DESCRIPTION OF THIS TRACT ACCOMPANYING THIS SKETCH.

3. THE SUBJECT TRACT SHOWN HEREON IS AN EASEMENT, MONUMENTS WERE NOT SET FOR CORNERS.

4. THIS SURVEY WAS MADE WITHOUT THE BENEFIT OF AN ABSTRACT OF TITLE NOR A TITLE COMMITMENT OR TITLE POLICY. THERE MAY BE ADDITIONAL EASEMENTS OR RESTRICTIONS, NOT SHOWN HEREON, WHICH MAY AFFECT THE PROPERTY.

THIS IS TO CERTIFY THAT THIS SURVEY WAS MADE ON THE GROUND IN FEBRUARY THROUGH NOVEMBER, 2023, BY ME OR UNDER MY SUPERVISION, THAT THIS SURVEY PLAT REPRESENTS THE FACTS FOUND AT THE TIME OF THE SURVEY.

INLAND GEODETICS

MIGUEL A. ESCOBAR, L.S.L.S., R.P.L.S.
TEXAS REG. NO. 5630

STATE OF TEXAS
REGISTERED
MIGUEL ANGEL ESCOBAR
5630
PROFESSIONAL
LAND SURVEYOR

SKETCH TO ACCOMPANY DESCRIPTION OF EASEMENT

SHOWING PROPERTY OF

WOOD AVANT INVESTMENTS LTD

PROJECT: S FORK TO S LAKE INTERCEPTOR
WILLIAMSON COUNTY

INLAND GEODETICS
Land Surveyors
1504 CHISHOLM TRAIL RD., #103
ROUND ROCK, TX 78681
512-238-1200
FIRM REG. NO. 100591-00

SHEET 6 OF 6

CDMS-003 5/2/2024

BB P:\PROJECTS\CDM SMITH (CDMS)\CDMS-003 - S. LAKE WTP TO SF INTERCEPTOR WW SYST EXPANSION\4-DRAWINGS\ESMT\CDMS-003-TCE P1-WOOD AVANT INVESTMENTS LTD.DWG

Easements

P2 – Wood Avant Investments, LTD

Exhibit " "
9.423 Acres (410,469 Square Feet)
Joseph Fish Survey, Abstract No. 232
Isaac Donagan Survey, Abstract No. 178
Williamson County, Texas

DESCRIPTION OF EASEMENT

DESCRIPTION OF A 9.423 ACRE (410,469 SQUARE FOOT) TRACT OF LAND, LOCATED IN THE JOSEPH FISH SURVEY, ABSTRACT NO. 232, AND ISAAC DONAGAN SURVEY, ABSTRACT NO. 178, WILLIAMSON COUNTY, TEXAS, BEING A PORTION OF THAT CERTAIN CALLED 2055.12 ACRE TRACT OF LAND, SAVE AND EXCEPT A CALLED 15 ACRE TRACT OF LAND, A CALLED 30 ACRE TRACT OF LAND, A CALLED 90 ACRE TRACT OF LAND, AND A CALLED 18.522 ACRE TRACT OF LAND, DESCRIBED AS TRACT I IN A SPECIAL WARRANTY DEED TO WOOD AVANT INVESTMENTS, LTD OF RECORD IN DOCUMENT NO. 2020167463, OF THE OFFICIAL PUBLIC RECORDS OF WILLIAMSON COUNTY, TEXAS, AND SUBJECT TO AFFIDAVIT OF CORRECTION RECORDED IN DOCUMENT NO. 2021014531, OF SAID OFFICIAL PUBLIC RECORDS, SAID 9.423 ACRE (410,469 SQUARE FOOT) TRACT OF LAND BEING SURVEYED ON THE GROUND IN FEBRUARY THROUGH NOVEMBER, 2023, UNDER THE DIRECT SUPERVISION OF MIGUEL A. ESCOBAR, LSLS, RPLS, AND BEING MORE PARTICULARLY DESCRIBED BY METES AND BOUNDS AS FOLLOWS:

BEGINNING at a 1/2-inch iron rod with cap stamped “INLAND GEODETICS” previously set in the east boundary line of a called 0.5191 acre tract of land described in a Possession and Use Agreement for Utility Purposes to the City of Georgetown of record in Document No. 2024016860, of said Official Public Records, for the northerly northwest corner and **POINT OF BEGINNING** of the herein described tract, from which point, a 1/2-inch iron rod with cap stamped “INLAND GEODETICS” previously set in the south right of way line of Cedar Breaks Road, a variable width right-of-way, dedicated in Volume 901, Page 551, of the Deed Records of Williamson County, Texas, same line being a northerly boundary line of said Tract I, for the northeast corner of said 0.5191 acre tract bears North 24°29'26" East, a distance of 85.39 feet;

THENCE, over and across the interior of said Tract I, the following fifteen (15) courses:

(1) South 62°27'56" East, a distance of **132.95 feet** to a calculated point;
(2) South 49°18'30" East, a distance of **143.48 feet** to a calculated point;
(3) South 04°14'30" East, a distance of **42.33 feet** to a calculated point;
(4) South 49°19'10" East, a distance of **106.61 feet** to a calculated point;
(5) North 85°41'36" East, a distance of **42.42 feet** to a calculated point;
(6) South 49°19'26" East, a distance of **181.65 feet** to a calculated point;
(7) South 03°55'51" West, a distance of **459.08 feet** to a calculated point;
(8) South 61°55'22" East, a distance of **411.49 feet** to a calculated point;
(9) South 79°18'48" East, a distance of **282.46 feet** to a calculated point;
(10) South 09°55'11" West, a distance of **426.16 feet** to a calculated point;
(11) South 80°39'44" East, a distance of **142.32 feet** to a calculated point;
(12) South 09°49'07" West, a distance of **158.97 feet** to a calculated point;
(13) South 69°54'31" East, a distance of **389.75 feet** to a calculated point;
(14) South 51°29'22" East, a distance of **548.96 feet** to a calculated point;
(15) North 39°49'14" East, a distance of **95.11 feet** to a calculated point for an angle point of the herein described tract in the southwesterly boundary line of a called 90.00 acre tract of land

described as Tract 2 in a Special Warranty Deed with Use Restriction of record in Document No. 2019122375, of said Official Public Records;

(16) THENCE, South 39°57'20" East, with the southwesterly boundary line of said Tract 2, a distance of **30.48 feet** to a calculated point for an angle point of the herein described tract, from which point, a 1/2-inch iron rod with cap stamped "STEGER BIZZELL" found bears South 39°57'20" East, a distance of 132.51 feet, South 61°13'56" East, a distance of 155.47 feet, South 53°10'51" East, a distance 87.44 feet, and South 44°35'05" East, a distance of 185.19 feet;

THENCE, over and across the interior of said Tract I, the following thirteen (13) courses:

(17) South 39°55'00" West, a distance of **89.02 feet** to a calculated point;
(18) South 51°29'22" East, a distance of **124.84 feet** to a calculated point;
(19) South 53°53'14" East, a distance of **387.17 feet** to a calculated point;
(20) South 51°38'31" East, a distance of **84.63 feet** to a calculated point;
(21) South 71°38'31" East, a distance of **316.54 feet** to a calculated point;
(22) South 19°13'31" East, a distance of **261.62 feet** to a calculated point;
(23) South 57°08'09" East, a distance of **382.73 feet** to a calculated point;
(24) South 37°58'44" East, a distance of **235.84 feet** to a calculated point;
(25) South 52°35'54" East, a distance of **211.18 feet** to a calculated point;
(26) South 66°31'16" East, a distance of **273.73 feet** to a calculated point;
(27) South 71°00'48" East, a distance of **149.98 feet** to a calculated point;
(28) North 01°51'06" East, a distance of **229.57 feet** to a calculated point;
(29) North 67°34'44" East, a distance of **47.28 feet** to a calculated point in the west boundary line of a called 1.686 acre tract of land described in a Possession and Use Agreement for Utility Purposes to the City of Georgetown of record in Document No. 2024016860, of said Official Public Records, for the northerly northeast corner of the herein described tract, from which point a 1/2-inch iron rod with cap stamped "INLAND GEODETICS" previously set for a northwest corner of said 1.686 acre tract bears North 22°25'16" East, a distance of 110.89 feet;

(30) THENCE, South 22°25'16" East, with the west boundary line of said 1.686 acre tract, at a distance of 101.37 feet, pass a 1/2-inch iron rod with cap stamped "INLAND GEODETICS" previously set in said west boundary line of the 1.686 acre tract, and continuing for a total distance of **136.37 feet** to a 1/2-inch iron rod with cap stamped "INLAND GEODETICS" previously set for the southwest corner of said 1.686 acre tract, from which point, a 1/2-inch iron rod with cap stamped "INLAND GEODETICS" previously set for an angle point of said 1.686 acre tract bears North 68°08'36" East, a distance of 124.97 feet;

THENCE, over and across the interior of said Tract I, the following thirty nine (39) courses:

(31) South 67°34'44" West, a distance of **64.90 feet** to a calculated point;
(32) South 01°51'06" West, a distance of **221.69 feet** to a calculated point;
(33) South 45°16'41" West, a distance of **93.18 feet** to a calculated point;
(34) South 66°56'17" West, a distance of **78.47 feet** to a calculated point;

(35) South 71°35'56" West, a distance of **66.61 feet** to a calculated point;
(36) South 73°26'18" West, a distance of **78.68 feet** to a calculated point;
(37) South 74°58'51" West, a distance of **61.45 feet** to a calculated point;
(38) South 30°00'35" West, a distance of **459.64 feet** to a calculated point;
(39) South 82°55'44" West, a distance of **845.08 feet** to a calculated point;
(40) North 81°14'02" West, a distance of **228.35 feet** to a calculated point;
(41) South 69°31'36" West, a distance of **394.37 feet** to a calculated point;
(42) South 13°11'06" West, a distance of **883.17 feet** to a calculated point;
(43) South 13°24'42" West, a distance of **39.20 feet** to a calculated point;
(44) South 10°38'50" West, a distance of **98.63 feet** to a calculated point;
(45) South 06°23'29" West, a distance of **64.45 feet** to a calculated point;
(46) South 02°52'54" West, a distance of **67.51 feet** to a calculated point;
(47) South 00°49'48" West, a distance of **28.47 feet** to a calculated point;
(48) South 00°29'30" East, a distance of **32.75 feet** to a calculated point;
(49) South 04°40'27" East, a distance of **73.91 feet** to a calculated point;
(50) South 06°54'33" East, a distance of **61.20 feet** to a calculated point;
(51) South 08°22'36" East, a distance of **25.57 feet** to a calculated point;
(52) South 12°38'35" East, a distance of **85.92 feet** to a calculated point;
(53) South 13°40'11" East, a distance of **740.17 feet** to a calculated point;
(54) South 13°38'07" East, a distance of **70.80 feet** to a calculated point;
(55) South 13°41'40" East, a distance of **340.89 feet** to a calculated point;
(56) South 13°37'11" East, a distance of **177.97 feet** to a calculated point;
(57) South 13°37'58" East, a distance of **175.36 feet** to a calculated point;
(58) South 11°38'22" East, a distance of **67.57 feet** to a calculated point;
(59) South 07°02'39" East, a distance of **100.56 feet** to a calculated point;
(60) South 00°54'31" East, a distance of **77.86 feet** to a calculated point;
(61) South 02°02'26" West, a distance of **203.75 feet** to a calculated point;
(62) South 00°00'00" East, a distance of **26.66 feet** to a calculated point;
(63) South 00°08'58" West, a distance of **61.82 feet** to a calculated point;
(64) South 04°29'37" East, a distance of **83.63 feet** to a calculated point;
(65) South 05°23'51" East, a distance of **50.28 feet** to a calculated point;
(66) South 12°45'19" East, a distance of **161.38 feet** to a calculated point;
(67) South 20°46'20" West, a distance of **90.25 feet** to a calculated point;
(68) South 07°15'20" West, a distance of **64.91 feet** to a calculated point in the north right of way line of State Highway No. 29, a 100 foot wide right of way, dedicated in Volume 264, Page 82, of said Deed Records, same line being a south boundary line of the aforementioned Tract I for the southeast corner of the herein described tract;

(69) THENCE, North 82°44'40" West, with said common boundary line of State Highway No. 29 and Tract I, a distance of **30.85 feet** to a calculated point for the southwest corner of the herein described tract, from which point, a TxDot Type I concrete monument bears North 82°44'40" West, a distance of 390.53 feet;

THENCE, over and across the interior of said Tract I, the following sixty two (62) courses:

(70) **North 07°15'20" East,** a distance of **64.91 feet** to a calculated point;
(71) **North 20°46'20" East,** a distance of **88.42 feet** to a calculated point;
(72) **North 12°45'19" West,** a distance of **154.27 feet** to a calculated point;
(73) **North 05°23'51" West,** a distance of **52.45 feet** to a calculated point;
(74) **North 04°29'37" West,** a distance of **85.08 feet** to a calculated point;
(75) **North 00°08'58" East,** a distance of **63.00 feet** to a calculated point;
(76) **North 00°00'00" East,** a distance of **27.15 feet** to a calculated point;
(77) **North 02°02'26" East,** a distance of **203.51 feet** to a calculated point;
(78) **North 00°54'31" West,** a distance of **75.48 feet** to a calculated point;
(79) **North 07°02'39" West,** a distance of **97.75 feet** to a calculated point;
(80) **North 11°38'22" West,** a distance of **65.85 feet** to a calculated point;
(81) **North 13°37'58" West,** a distance of **174.84 feet** to a calculated point;
(82) **North 13°37'11" West**, a distance of **177.95 feet** to a calculated point;
(83) **North 13°41'40" West,** a distance of **340.88 feet** to a calculated point;
(84) **North 13°38'07" West,** a distance of **70.80 feet** to a calculated point;
(85) **North 13°40'11" West,** a distance of **740.43 feet** to a calculated point;
(86) **North 12°38'35" West,** a distance of **87.30 feet** to a calculated point;
(87) **North 08°22'36" West,** a distance of **27.07 feet** to a calculated point;
(88) **North 06°54'33" West,** a distance of **62.16 feet** to a calculated point;
(89) **North 04°40'27" West,** a distance of **75.59 feet** to a calculated point;
(90) **North 00°29'30" West,** a distance of **34.19 feet** to a calculated point;
(91) **North 00°49'48" East,** a distance of **29.35 feet** to a calculated point;
(92) **North 02°52'54" East,** a distance of **68.96 feet** to a calculated point;
(93) **North 06°23'29" East,** a distance of **66.49 feet** to a calculated point;
(94) **North 10°38'50" East,** a distance of **100.46 feet** to a calculated point;
(95) **North 13°24'42" East,** a distance of **39.86 feet** to a calculated point;
(96) **North 13°11'06" East,** a distance of **911.19 feet** to a calculated point;
(97) **North 69°31'36" East,** a distance of **414.21 feet** to a calculated point;
(98) **South 81°14'02" East,** a distance of **233.22 feet** to a calculated point;
(99) **North 82°55'44" East,** a distance of **819.61 feet** to a calculated point;
(100) **North 30°00'35" East,** a distance of **456.29 feet** to a calculated point;
(101) **North 74°58'51" East,** a distance of **77.47 feet** to a calculated point;
(102) **North 73°26'18" East,** a distance of **77.50 feet** to a calculated point;
(103) **North 71°35'56" East,** a distance of **64.34 feet** to a calculated point;
(104) **North 66°56'17" East,** a distance of **69.19 feet** to a calculated point;
(105) **North 45°16'41" East,** a distance of **69.60 feet** to a calculated point;
(106) **North 01°51'06" East,** a distance of **76.36 feet** to a calculated point;
(107) **North 71°00'48" West,** a distance of **160.41 feet** to a calculated point;
(108) **North 66°31'16" West,** a distance of **278.57 feet** to a calculated point;
(109) **North 52°35'54" West,** a distance of **218.69 feet** to a calculated point;
(110) **North 37°58'44" West,** a distance of **234.62 feet** to a calculated point;

(111) North 57°08'09" West, a distance of **387.97 feet** to a calculated point;
(112) North 19°13'31" West, a distance of **257.16 feet** to a calculated point;
(113) North 71°38'31" West, a distance of **307.07 feet** to a calculated point;
(114) North 51°38'31" West, a distance of **89.33 feet** to a calculated point;
(115) North 53°53'14" West, a distance of **387.21 feet** to a calculated point;
(116) North 51°29'22" West, a distance of **154.13 feet** to a calculated point;
(117) North 51°29'22" West, a distance of **545.30 feet** to a calculated point;
(118) North 69°54'31" West, a distance of **409.94 feet** to a calculated point;
(119) North 09°49'07" East, a distance of **153.77 feet** to a calculated point;
(120) North 80°39'44" West, a distance of **142.37 feet** to a calculated point;
(121) North 09°55'11" East, a distance of **426.87 feet** to a calculated point;
(122) North 79°18'48" West, a distance of **257.45 feet** to a calculated point;
(123) North 61°55'22" West, a distance of **435.51 feet** to a calculated point;
(124) North 03°55'51" East, a distance of **463.47 feet** to a calculated point;
(125) North 49°19'26" West, a distance of **154.19 feet** to a calculated point;
(126) South 85°41'36" West, a distance of **42.42 feet** to a calculated point;
(127) North 49°19'10" West, a distance of **131.48 feet** to a calculated point;
(128) North 04°14'30" West, a distance of **42.33 feet** to a calculated point;
(129) North 49°18'30" West, a distance of **127.57 feet** to a calculated point;
(130) North 62°27'56" West, a distance of **127.89 feet** to a calculated point in the east boundary line of the aforementioned 0.5191 acre tract from which point, a 1/2-inch iron with cap stamped "INLAND GEODETICS" previously set for the southeast corner of said 0.5191 acre tract bears South 24°29'26" West, a distance of 38.05 feet;

(131) THENCE, North 24°29'26" East, with said east boundary line of said 0.5191 acre tract, a distance of **30.04 feet** to the **POINT OF BEGINNING** and containing 9.423 acres of land (410,469 Sq. Ft.), more or less, within these metes and bounds.

Bearings are based on the Texas Coordinate System of 1983, Central Zone, NAD 83 (2011). All distances are surface values represented in US Survey Feet based on a Surface-to-Grid Combined Adjustment Factor of 0.9998673234.

The use of the word "certify" or "certification" on this document only constitutes an expression of professional opinion regarding those facts or findings which are the subject of the certification, and does not constitute a warranty or guarantee, either expressed or implied.

Together with a 70 foot wide (8.635 acres, 376,150 Sq. Ft.) Temporary Construction Easement being adjacent to, parallel with, and southerly/easterly to courses 39 through 68, a 20 foot wide (0.0298 acre, 1298 Sq. Ft.) Temporary Construction Easement being adjacent to, parallel with, and westerly to course 70, a variable width (6.226 acres, 271,194 Sq. Ft.) Temporary Construction Easement being 70 feet wide, adjacent to, parallel with, and southerly/westerly to courses 100 through 116, being 30 feet wide, adjacent to, parallel with, and southerly to courses 117 and 118, and being 70 feet wide, adjacent to, parallel with, and westerly to course 119, and with a 70 foot wide (2.883 acres, 125,565 Sq. Ft.) Temporary Construction Easement being adjacent to, parallel with, and southerly to courses 122 through 130, as shown on the attached survey map of the subject tract.

The subject tract shown hereon is an easement, monuments were not set for corners.

The foregoing metes and bounds description, and survey on which it was based, is accompanied by and a part of a survey map of the subject tract.

I, Miguel A. Escobar a Registered Professional Land Surveyor, do hereby certify that the above description and the accompanying sketch is true and correct to the best of my knowledge and belief and the property described herein was determined by a survey made on the ground during the months of February through November, 2023, under my direct supervision.

WITNESS MY HAND AND SEAL at Round Rock, Williamson County, Texas on this 2nd of May, 2024, A.D.

INLAND GEODETICS

Miguel A. Escobar, L.S.L.S., R.P.L.S.
Texas Reg. No. 5630
1504 Chisholm Trail Rd #103
Round Rock, TX 78681
TBPELS Firm No. 10059100

P:\Projects\CDM Smith (CDMS)\CDMS-003 - S. Lake WTP To SF Interceptor WW Syst Expansion\5-Descriptions-Reports\ESMT\PART 2-WOOD AVANT INVESTMENTS LTD\CDMS-003-ESMT-WOOD AVANT INVESTMENTS LTD.docx

EXHIBIT _____

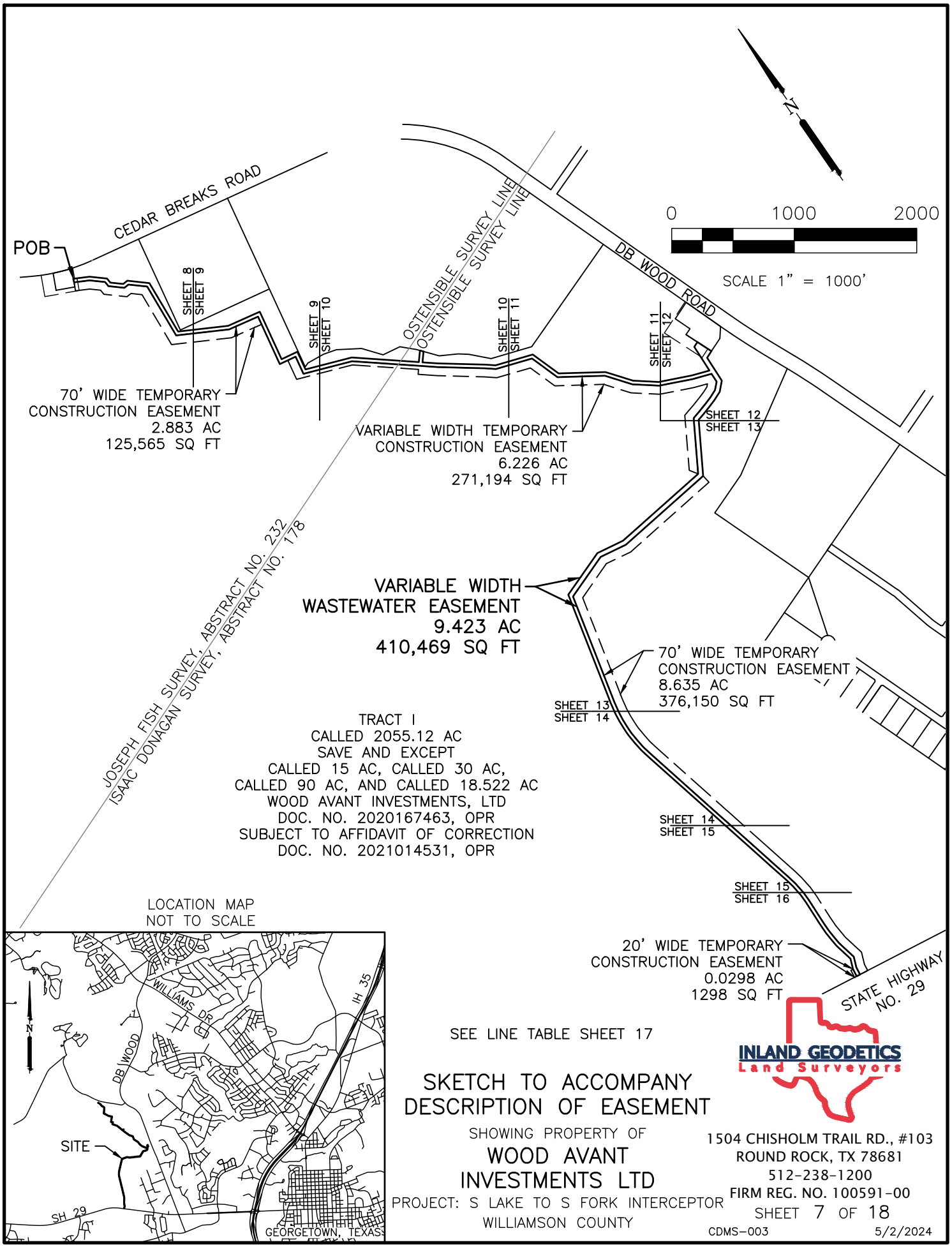

SEE LINE TABLE SHEET 17

SKETCH TO ACCOMPANY DESCRIPTION OF EASEMENT

SHOWING PROPERTY OF

WOOD AVANT INVESTMENTS LTD

PROJECT: S LAKE TO S FORK INTERCEPTOR
WILLIAMSON COUNTY

INLAND GEODETICS
Land Surveyors
1504 CHISHOLM TRAIL RD., #103
ROUND ROCK, TX 78681
512-238-1200
FIRM REG. NO. 100591-00

SHEET 7 OF 18

CDMS-003 5/2/2024

P:\PROJECTS\CDM SMITH (CDMS)\CDMS-003 - S. LAKE WTP TO SF INTERCEPTOR WW SYST EXPANSION\4-DRAWINGS\ESMT\CDMS-003-ESMT P2-WOOD AVANT INVESTMENTS LTD.DWG

BB

EXHIBIT _____

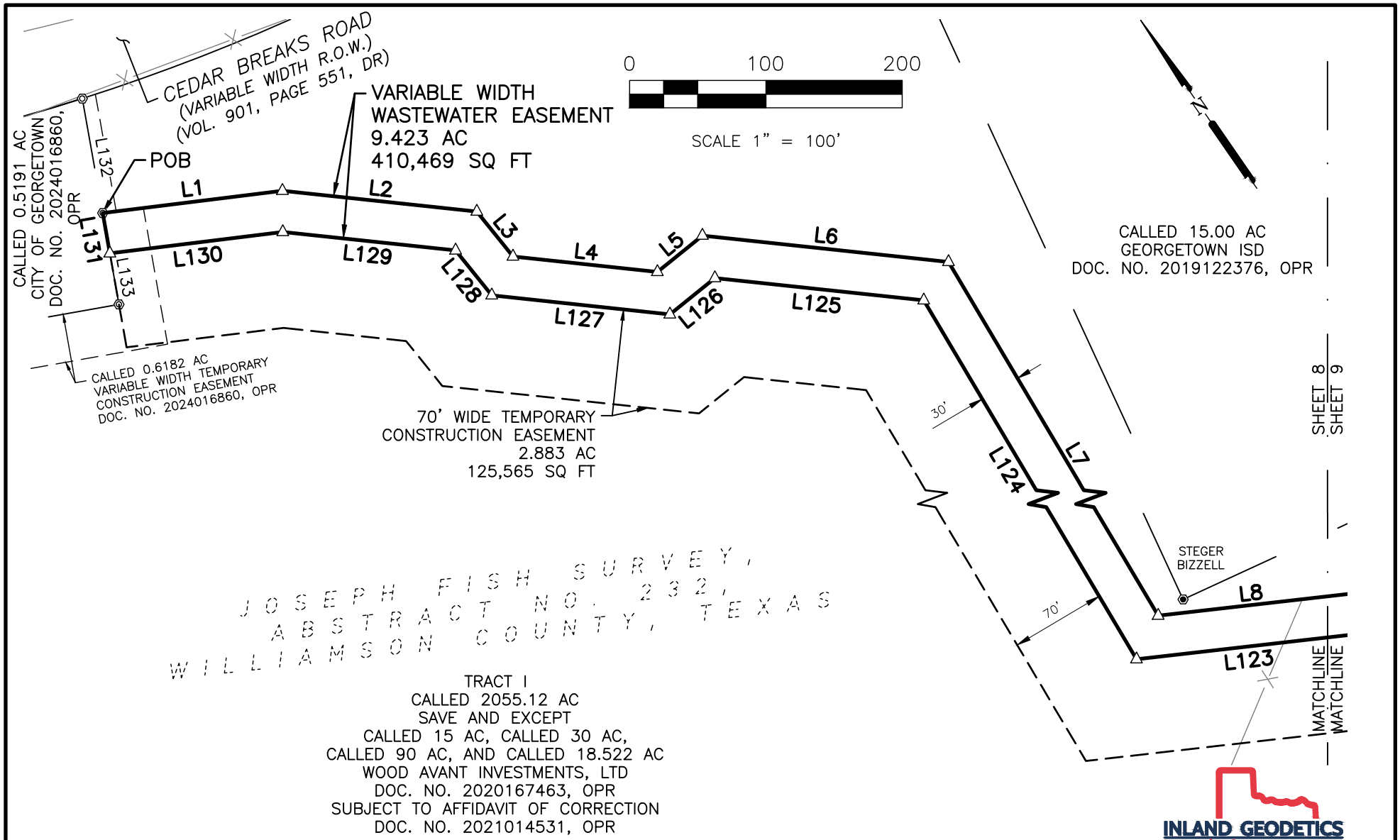

TRACT I
CALLED 2055.12 AC
SAVE AND EXCEPT
CALLED 15 AC, CALLED 30 AC,
CALLED 90 AC, AND CALLED 18.522 AC
WOOD AVANT INVESTMENTS, LTD
DOC. NO. 2020167463, OPR
SUBJECT TO AFFIDAVIT OF CORRECTION
DOC. NO. 2021014531, OPR

SEE LINE TABLE SHEET 17
SEE LEGEND SHEET 17

SKETCH TO ACCOMPANY DESCRIPTION OF EASEMENT

SHOWING PROPERTY OF

WOOD AVANT INVESTMENTS LTD.

PROJECT: S LAKE TO S FORK INTERCEPTOR
WILLIAMSON COUNTY

INLAND GEODETICS
Land Surveyors
1504 CHISHOLM TRAIL RD., #103
ROUND ROCK, TX 78681
512-238-1200
FIRM REG. NO. 100591-00

SHEET 8 OF 18

CDMS-003 5/2/2024

P:\PROJECTS\CDM SMITH (CDMS)\CDMS-003 - S. LAKE WTP TO SF INTERCEPTOR WW SYST EXPANSION\4-DRAWINGS\ESMT\CDMS-003-ESMT P2-WOOD AVANT INVESTMENTS LTD.DWG

BB

EXHIBIT _____

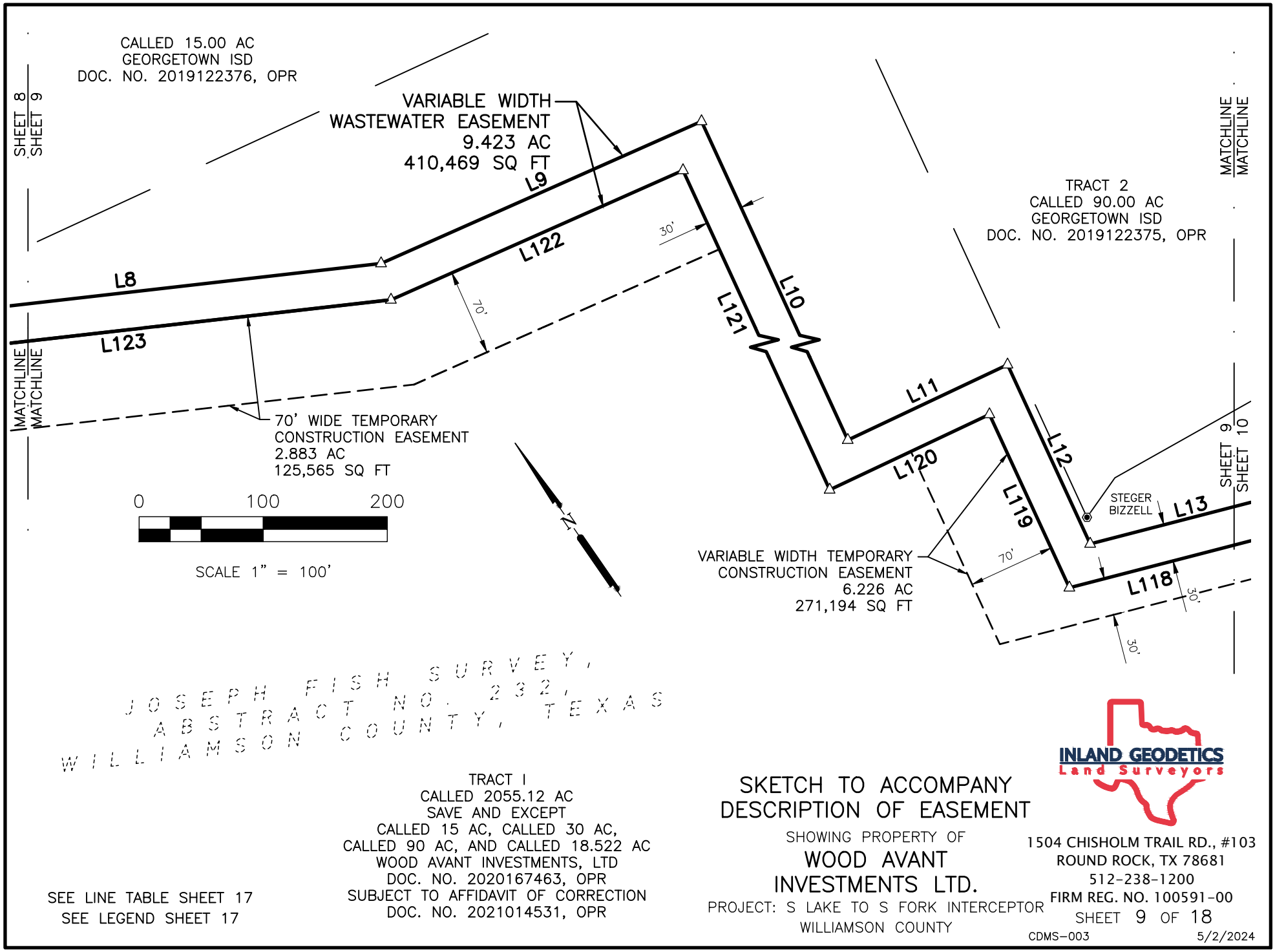

P:\PROJECTS\CDM SMITH (CDMS)\CDMS-003 - S. LAKE WTP TO SF INTERCEPTOR WW SYST EXPANSION\4-DRAWINGS\ESMT\CDMS-003-ESMT P2-WOOD AVANT INVESTMENTS LTD.DWG

BB

EXHIBIT _____

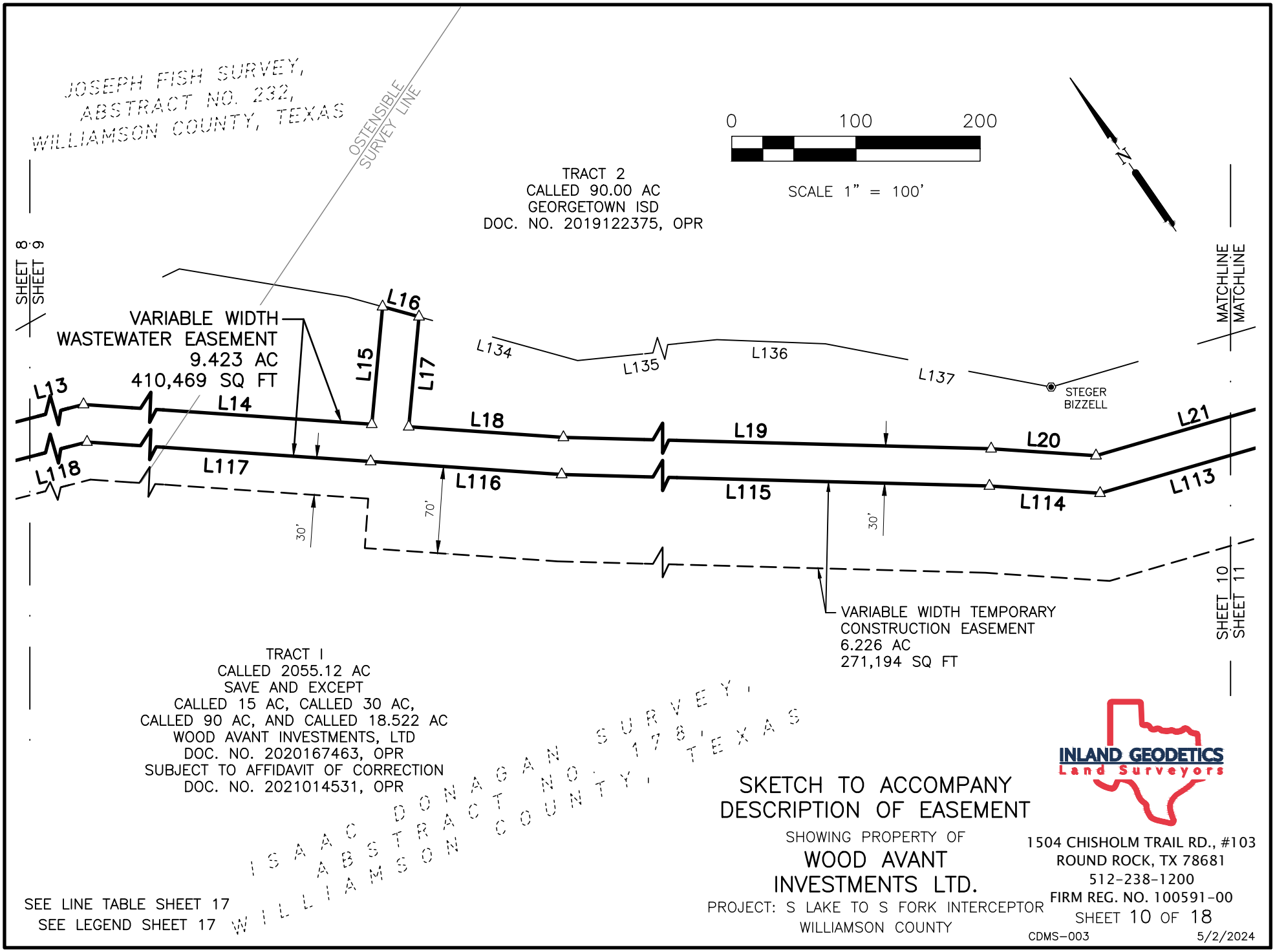

SEE LINE TABLE SHEET 17
SEE LEGEND SHEET 17

SKETCH TO ACCOMPANY DESCRIPTION OF EASEMENT

SHOWING PROPERTY OF

WOOD AVANT INVESTMENTS LTD.

PROJECT: S LAKE TO S FORK INTERCEPTOR
WILLIAMSON COUNTY

INLAND GEODETICS
Land Surveyors

1504 CHISHOLM TRAIL RD., #103
ROUND ROCK, TX 78681
512-238-1200
FIRM REG. NO. 100591-00

SHEET 10 OF 18

CDMS-003 5/2/2024

P:\PROJECTS\CDM SMITH (CDMS)\CDMS-003 - S. LAKE WTP TO SF INTERCEPTOR WW SYST EXPANSION\4-DRAWINGS\ESMT\CDMS-003-ESMT P2-WOOD AVANT INVESTMENTS LTD.DWG

BB

EXHIBIT _____

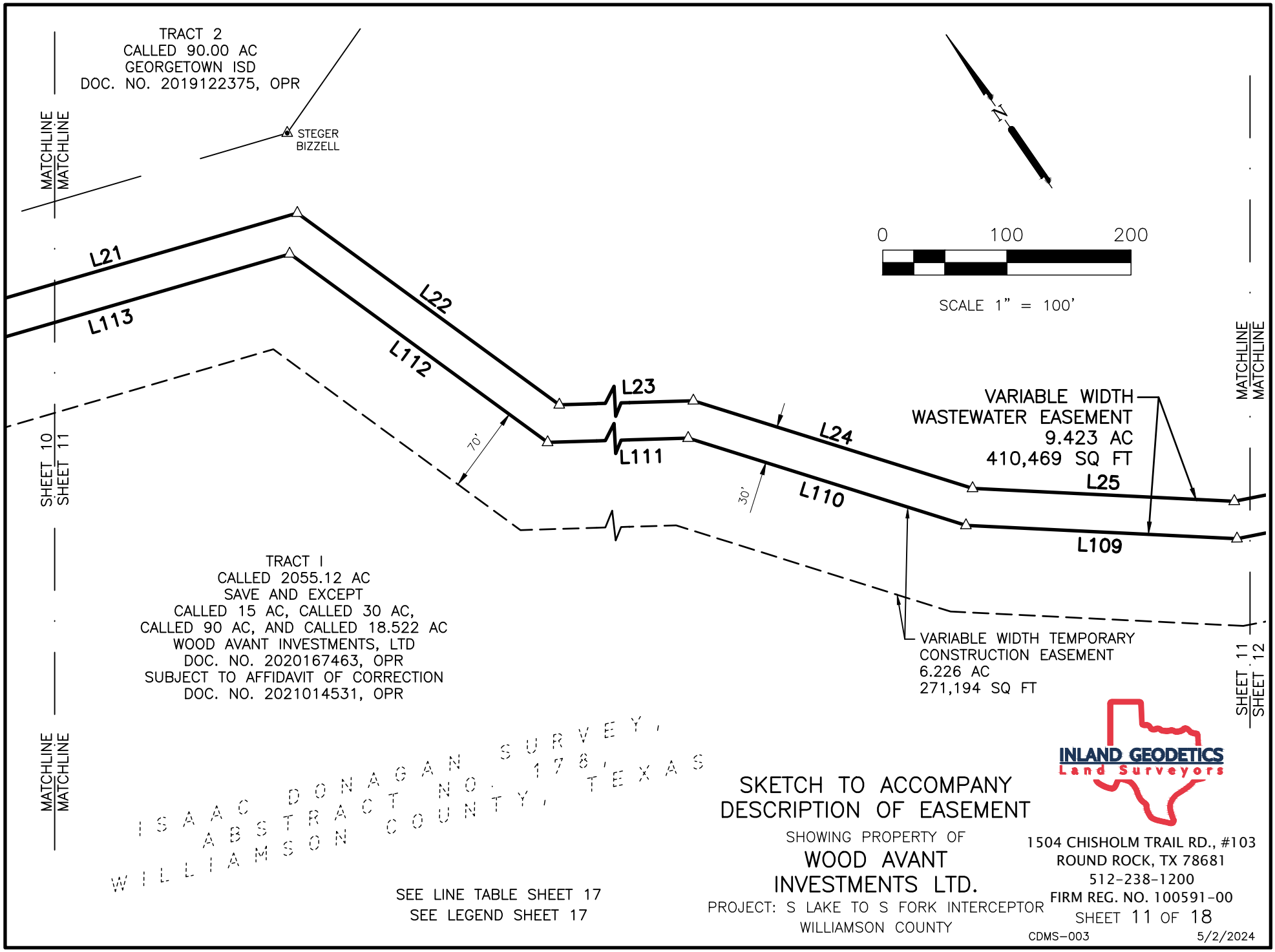

SKETCH TO ACCOMPANY DESCRIPTION OF EASEMENT

SHOWING PROPERTY OF

WOOD AVANT INVESTMENTS LTD.

PROJECT: S LAKE TO S FORK INTERCEPTOR
WILLIAMSON COUNTY

1504 CHISHOLM TRAIL RD., #103
ROUND ROCK, TX 78681
512-238-1200
FIRM REG. NO. 100591-00

SHEET 11 OF 18

CDMS-003 5/2/2024

P:\PROJECTS\CDM SMITH (CDMS)\CDMS-003 - S. LAKE WTP TO SF INTERCEPTOR WW SYST EXPANSION\4-DRAWINGS\ESMT\CDMS-003-ESMT P2-WOOD AVANT INVESTMENTS LTD.DWG

BB

EXHIBIT _____

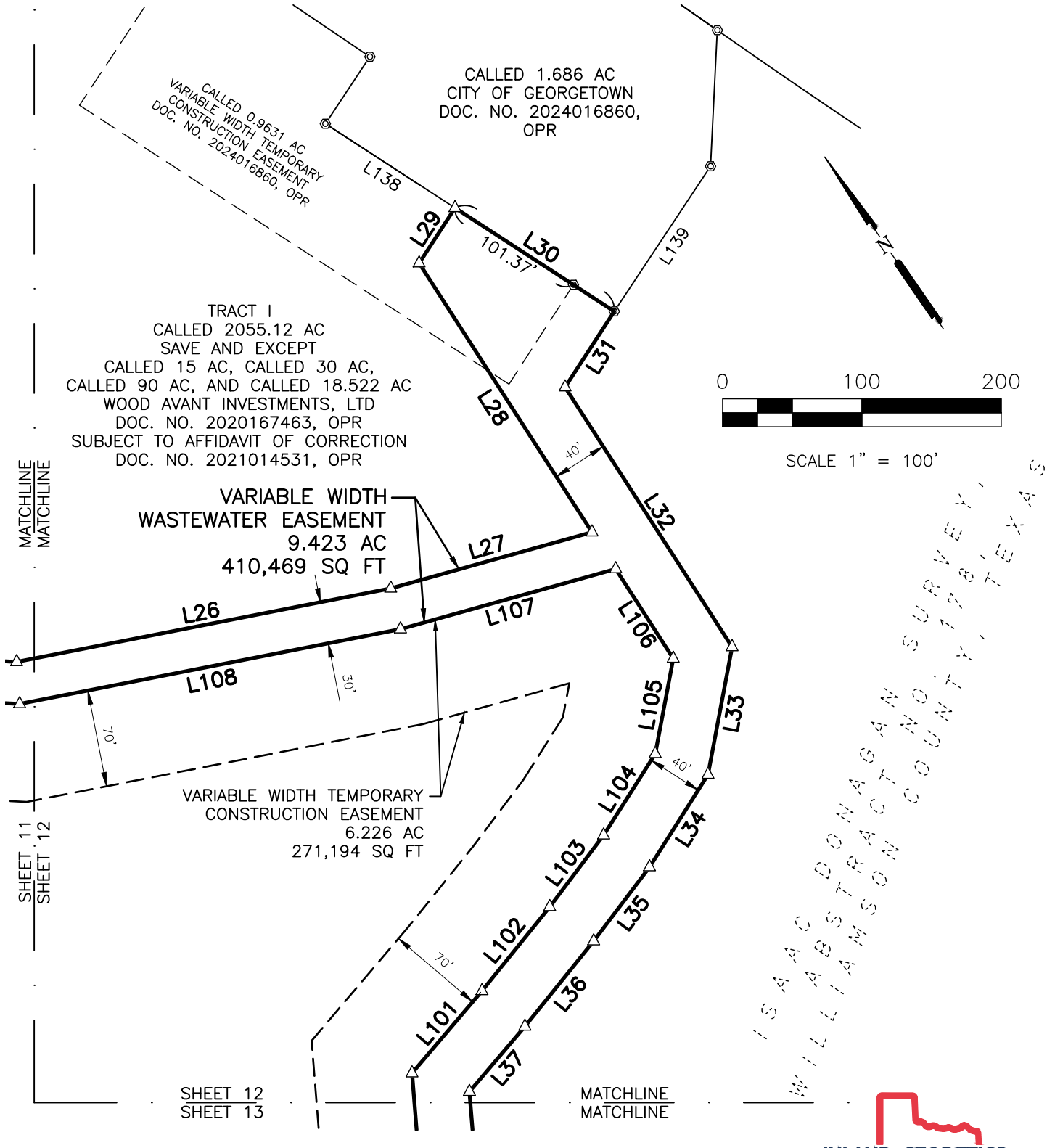

INLAND GEODETICS
Land Surveyors

SKETCH TO ACCOMPANY DESCRIPTION OF EASEMENT

SHOWING PROPERTY OF

WOOD AVANT INVESTMENTS LTD

PROJECT: S LAKE TO S FORK INTERCEPTOR
WILLIAMSON COUNTY

1504 CHISHOLM TRAIL RD., #103
ROUND ROCK, TX 78681
512-238-1200
FIRM REG. NO. 100591-00

SHEET 12 OF 18

CDMS-003 5/2/2024

SEE LINE TABLE SHEET 17
SEE LEGEND SHEET 17

P:\PROJECTS\CDM SMITH (CDMS)\CDMS-003 - S. LAKE WTP TO SF INTERCEPTOR WW SYST EXPANSION\4-DRAWINGS\ESMT\CDMS-003-ESMT P2-WOOD AVANT INVESTMENTS LTD.DWG

BB

EXHIBIT _____

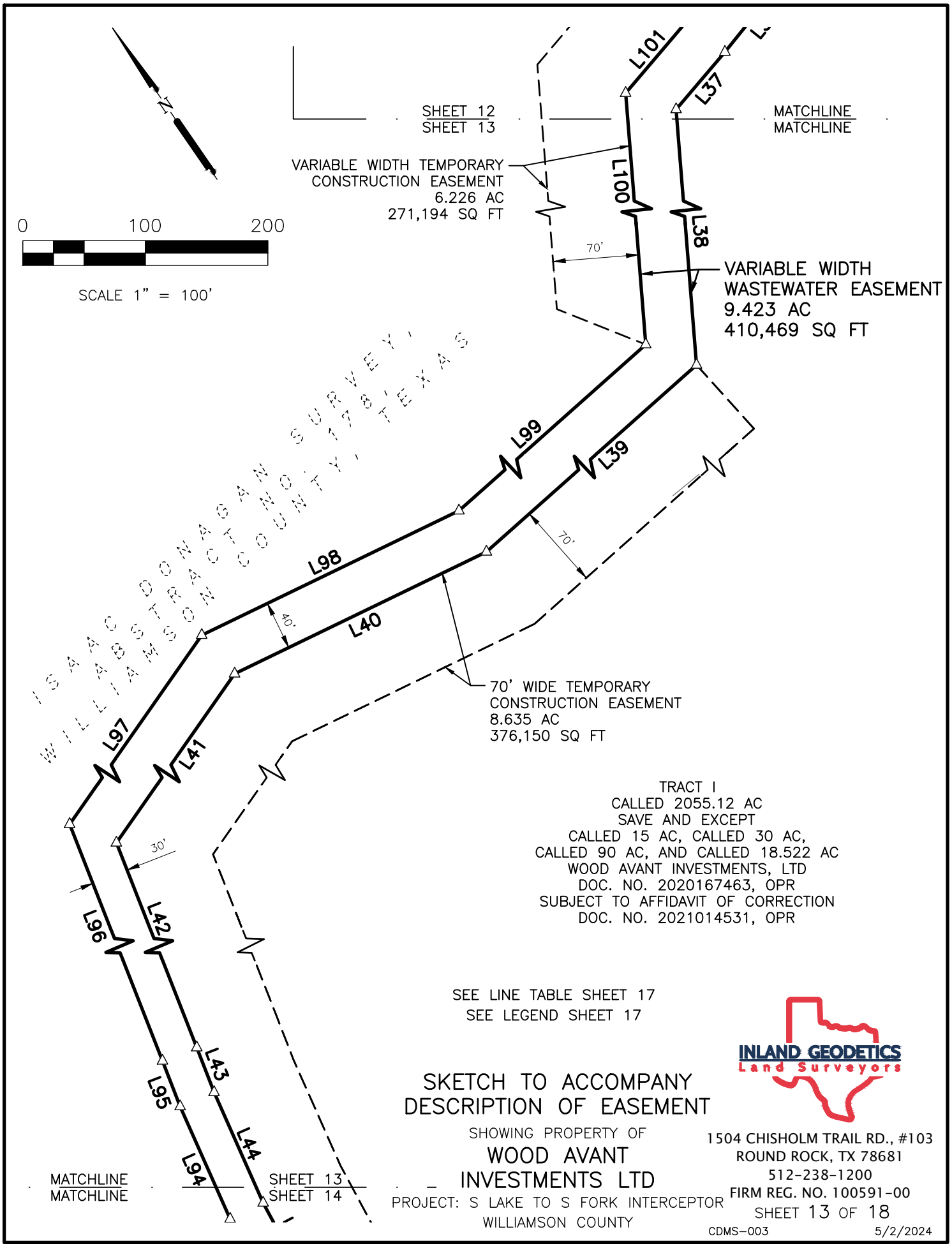

SEE LINE TABLE SHEET 17
SEE LEGEND SHEET 17

SKETCH TO ACCOMPANY DESCRIPTION OF EASEMENT

SHOWING PROPERTY OF

WOOD AVANT INVESTMENTS LTD

PROJECT: S LAKE TO S FORK INTERCEPTOR
WILLIAMSON COUNTY

INLAND GEODETICS
Land Surveyors

1504 CHISHOLM TRAIL RD., #103
ROUND ROCK, TX 78681
512-238-1200
FIRM REG. NO. 100591-00

SHEET 13 OF 18

CDMS-003 5/2/2024

P:\PROJECTS\CDM SMITH (CDMS)\CDMS-003 - S. LAKE WTP TO SF INTERCEPTOR WW SYST EXPANSION\4-DRAWINGS\ESMT\CDMS-003-ESMT P2-WOOD AVANT INVESTMENTS LTD.DWG

BB

EXHIBIT _____

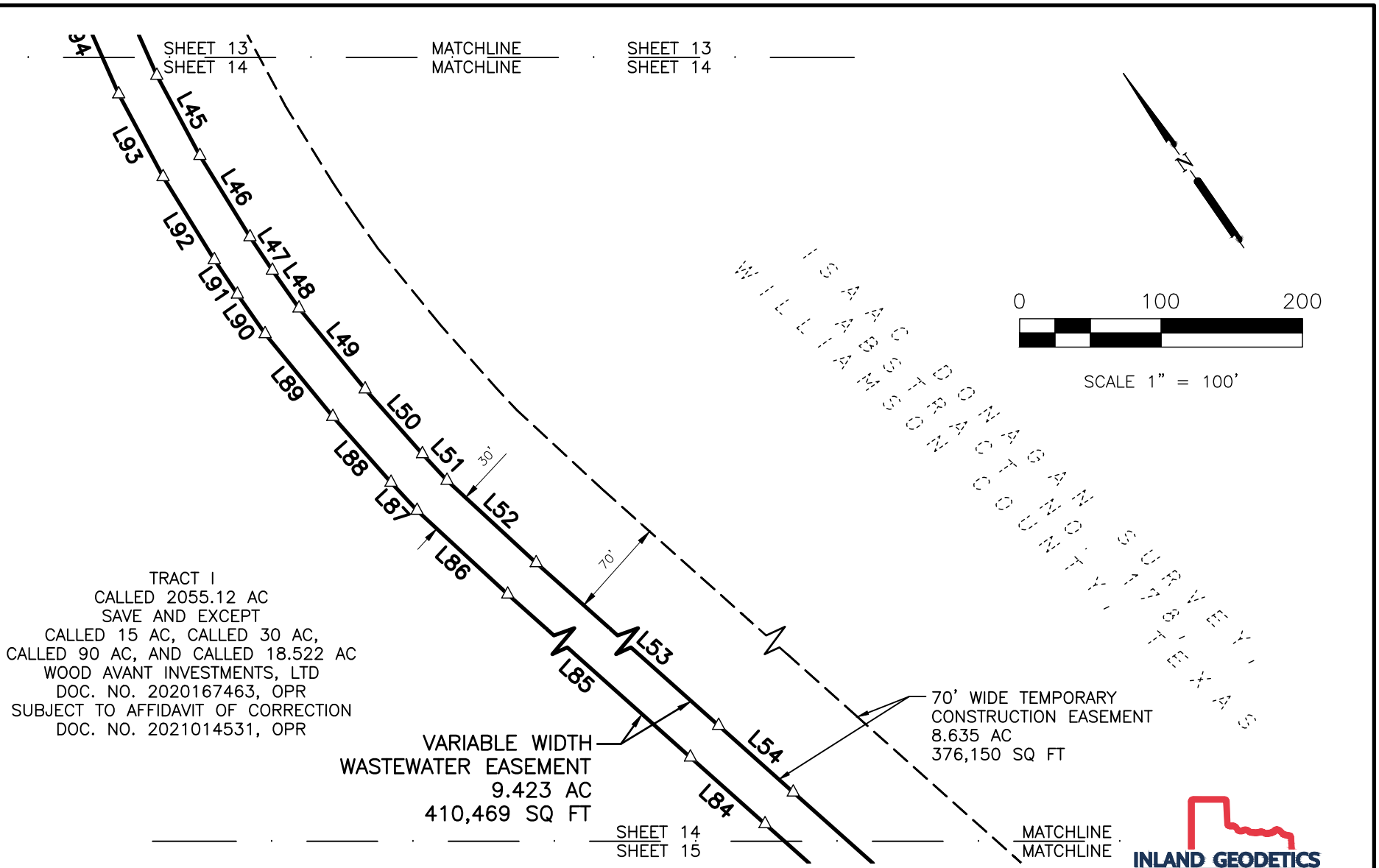

SEE LINE TABLE SHEET 17
SEE LEGEND SHEET 17

SKETCH TO ACCOMPANY DESCRIPTION OF EASEMENT

SHOWING PROPERTY OF

WOOD AVANT INVESTMENTS LTD.

PROJECT: S LAKE TO S FORK INTERCEPTOR
WILLIAMSON COUNTY

INLAND GEODETICS
Land Surveyors
1504 CHISHOLM TRAIL RD., #103
ROUND ROCK, TX 78681
512-238-1200
FIRM REG. NO. 100591-00

SHEET 14 OF 18

CDMS-003 5/2/2024

BB P:\PROJECTS\CDM SMITH (CDMS)\CDMS-003 - S. LAKE WTP TO SF INTERCEPTOR WW SYST EXPANSION\4-DRAWINGS\ESMT\CDMS-003-ESMT P2-WOOD AVANT INVESTMENTS LTD.DWG

EXHIBIT _____

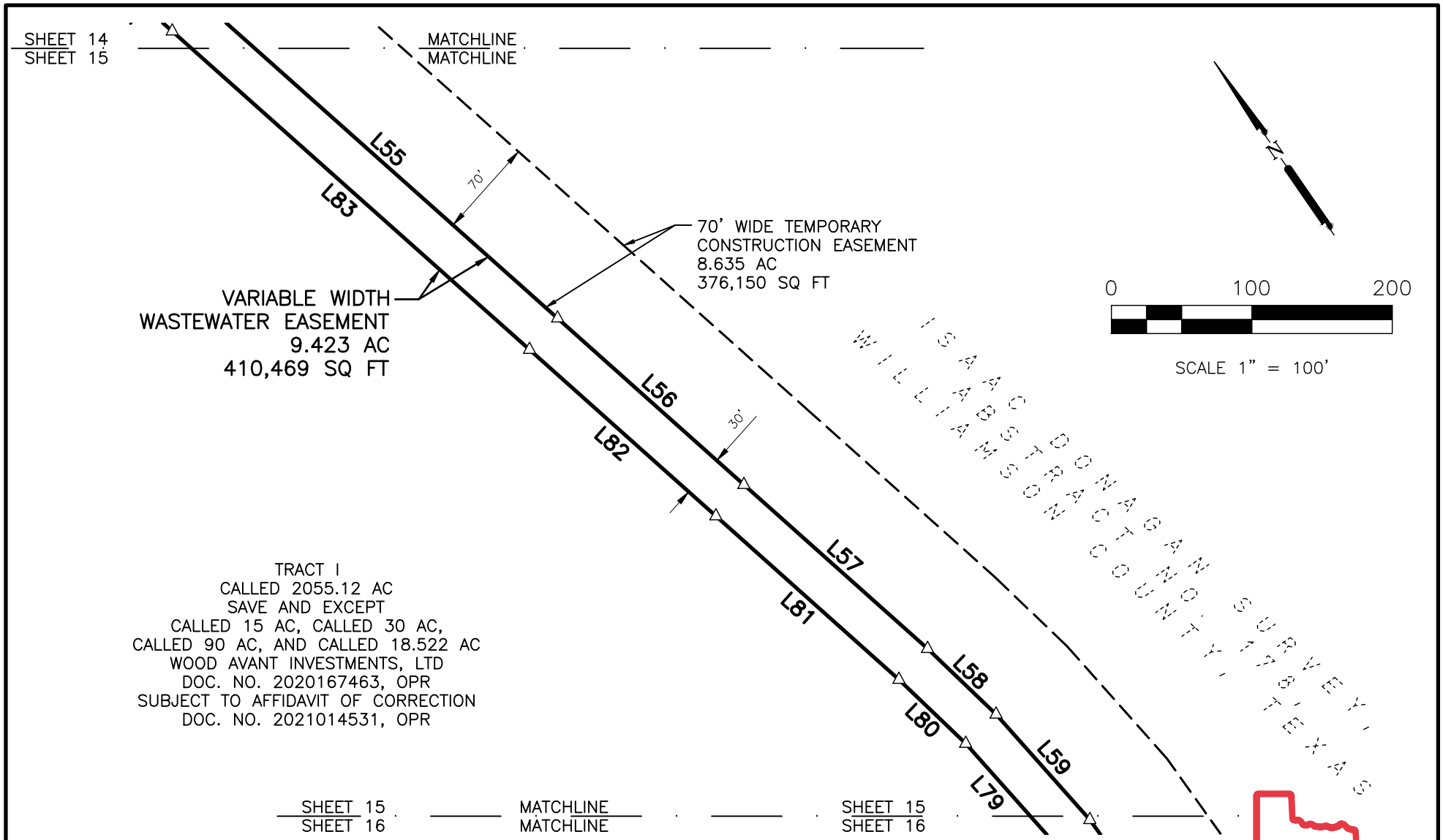

SEE LINE TABLE SHEET 17
SEE LEGEND SHEET 17

SKETCH TO ACCOMPANY DESCRIPTION OF EASEMENT

SHOWING PROPERTY OF

WOOD AVANT INVESTMENTS LTD.

PROJECT: S LAKE TO S FORK INTERCEPTOR
WILLIAMSON COUNTY

INLAND GEODETICS
Land Surveyors
1504 CHISHOLM TRAIL RD., #103
ROUND ROCK, TX 78681
512-238-1200
FIRM REG. NO. 100591-00

SHEET 15 OF 18

CDMS-003 5/2/2024

P:\PROJECTS\CDM SMITH (CDMS)\CDMS-003 - S. LAKE WTP TO SF INTERCEPTOR WW SYST EXPANSION\4-DRAWINGS\ESMT\CDMS-003-ESMT P2-WOOD AVANT INVESTMENTS LTD.DWG

BB

EXHIBIT _____

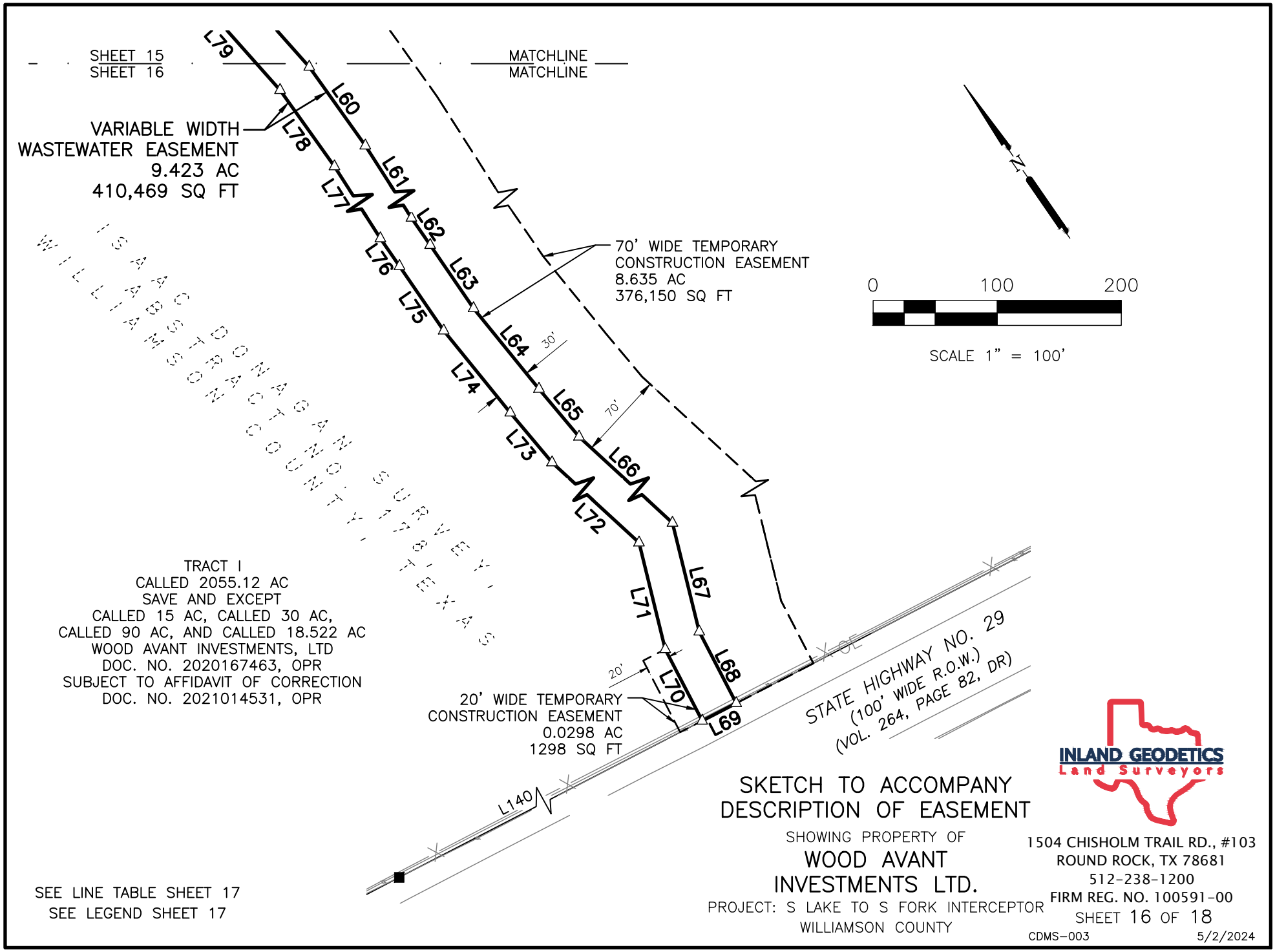

SEE LINE TABLE SHEET 17
SEE LEGEND SHEET 17

SKETCH TO ACCOMPANY DESCRIPTION OF EASEMENT

SHOWING PROPERTY OF

WOOD AVANT INVESTMENTS LTD.

PROJECT: S LAKE TO S FORK INTERCEPTOR
WILLIAMSON COUNTY

INLAND GEODETICS
Land Surveyors
1504 CHISHOLM TRAIL RD., #103
ROUND ROCK, TX 78681
512-238-1200
FIRM REG. NO. 100591-00

SHEET 16 OF 18

CDMS-003 5/2/2024

P:\PROJECTS\CDM SMITH (CDMS)\CDMS-003 - S. LAKE WTP TO SF INTERCEPTOR WW SYST EXPANSION\4-DRAWINGS\ESMT\CDMS-003-ESMT P2-WOOD AVANT INVESTMENTS LTD.DWG

BB

EXHIBIT _____

NO.	BEARING	DISTANCE
L1	S 62° 27' 56" E	132.95'
L2	S 49° 18' 30" E	143.48'
L3	S 04° 14' 30" E	42.33'
L4	S 49° 19' 10" E	106.61'
L5	N 85° 41' 36" E	42.42'
L6	S 49° 19' 26" E	181.65'
L7	S 03° 55' 51" W	459.08'
L8	S 61° 55' 22" E	411.49'
L9	S 79° 18' 48" E	282.46'
L10	S 09° 55' 11" W	426.16'
L11	S 80° 39' 44" E	142.32'
L12	S 09° 49' 07" W	158.97'
L13	S 69° 54' 31" E	389.75'
L14	S 51° 29' 22" E	548.96'
L15	N 39° 49' 14" E	95.11'
L16	S 39° 57' 20" E	30.48'
L17	S 39° 55' 00" W	89.02'
L18	S 51° 29' 22" E	124.84'
L19	S 53° 53' 14" E	387.17'
L20	S 51° 38' 31" E	84.63'
L21	S 71° 38' 31" E	316.54'
L22	S 19° 13' 31" E	261.62'
L23	S 57° 08' 09" E	382.73'
L24	S 37° 58' 44" E	235.84'
L25	S 52° 35' 54" E	211.18'
L26	S 66° 31' 16" E	273.73'
L27	S 71° 00' 48" E	149.98'
L28	N 01° 51' 06" E	229.57'
L29	N 67° 34' 44" E	47.28'
L30	S 22° 25' 16" E	136.37'
L31	S 67° 34' 44" W	64.90'
L32	S 01° 51' 06" W	221.69'
L33	S 45° 16' 41" W	93.18'
L34	S 66° 56' 17" W	78.47'
L35	S 71° 35' 56" W	66.61'
L36	S 73° 26' 18" W	78.68'
L37	S 74° 58' 51" W	61.45'
L38	S 30° 00' 35" W	459.64'
L39	S 82° 55' 44" W	845.08'
L40	N 81° 14' 02" W	228.35'
L41	S 69° 31' 36" W	394.37'
L42	S 13° 11' 06" W	883.17'
L43	S 13° 24' 42" W	39.20'
L44	S 10° 38' 50" W	98.63'
L45	S 06° 23' 29" W	64.45'
L46	S 02° 52' 54" W	67.51'
L47	S 00° 49' 48" W	28.47'
L48	S 00° 29' 30" E	32.75'
L49	S 04° 40' 27" E	73.91'
L50	S 06° 54' 33" E	61.20'

NO.	BEARING	DISTANCE
L51	S 08° 22' 36" E	25.57'
L52	S 12° 38' 35" E	85.92'
L53	S 13° 40' 11" E	740.17'
L54	S 13° 38' 07" E	70.80'
L55	S 13° 41' 40" E	340.89'
L56	S 13° 37' 11" E	177.97'
L57	S 13° 37' 58" E	175.36'
L58	S 11° 38' 22" E	67.57'
L59	S 07° 02' 39" E	100.56'
L60	S 00° 54' 31" E	77.86'
L61	S 02° 02' 26" W	203.75'
L62	S 00° 00' 00" E	26.66'
L63	S 00° 08' 58" W	61.82'
L64	S 04° 29' 37" E	83.63'
L65	S 05° 23' 51" E	50.28'
L66	S 12° 45' 19" E	161.38'
L67	S 20° 46' 20" W	90.25'
L68	S 07° 15' 20" W	64.91'
L69	N 82° 44' 40" W	30.85'
L70	N 07° 15' 20" E	64.91'
L71	N 20° 46' 20" E	88.42'
L72	N 12° 45' 19" W	154.27'
L73	N 05° 23' 51" W	52.45'
L74	N 04° 29' 37" W	85.08'
L75	N 00° 08' 58" E	63.00'
L76	N 00° 00' 00" W	27.15'
L77	N 02° 02' 26" E	203.51'
L78	N 00° 54' 31" W	75.48'
L79	N 07° 02' 39" W	97.75'
L80	N 11° 38' 22" W	65.85'
L81	N 13° 37' 58" W	174.84'
L82	N 13° 37' 11" W	177.95'
L83	N 13° 41' 40" W	340.88'
L84	N 13° 38' 07" W	70.80'
L85	N 13° 40' 11" W	740.43'
L86	N 12° 38' 35" W	87.30'
L87	N 08° 22' 36" W	27.07'
L88	N 06° 54' 33" W	62.16'
L89	N 04° 40' 27" W	75.59'
L90	N 00° 29' 30" W	34.19'
L91	N 00° 49' 48" E	29.35'
L92	N 02° 52' 54" E	68.96'
L93	N 06° 23' 29" E	66.49'
L94	N 10° 38' 50" E	100.46'
L95	N 13° 24' 42" E	39.86'
L96	N 13° 11' 06" E	911.19'
L97	N 69° 31' 36" E	414.21'
L98	S 81° 14' 02" E	233.22'
L99	N 82° 55' 44" E	819.61'
L100	N 30° 00' 35" E	456.29'

NO.	BEARING	DISTANCE
L101	N 74° 58' 51" E	77.47'
L102	N 73° 26' 18" E	77.50'
L103	N 71° 35' 56" E	64.34'
L104	N 66° 56' 17" E	69.19'
L105	N 45° 16' 41" E	69.60'
L106	N 01° 51' 06" E	76.36'
L107	N 71° 00' 48" W	160.41'
L108	N 66° 31' 16" W	278.57'
L109	N 52° 35' 54" W	218.69'
L110	N 37° 58' 44" W	234.62'
L111	N 57° 08' 09" W	387.97'
L112	N 19° 13' 31" W	257.16'
L113	N 71° 38' 31" W	307.07'
L114	N 51° 38' 31" W	89.33'
L115	N 53° 53' 14" W	387.21'
L116	N 51° 29' 22" W	154.13'
L117	N 51° 29' 22" W	545.30'
L118	N 69° 54' 31" W	409.94'
L119	N 09° 49' 07" E	153.77'
L120	N 80° 39' 44" W	142.37'
L121	N 09° 55' 11" E	426.87'
L122	N 79° 18' 48" W	257.45'
L123	N 61° 55' 22" W	435.51'
L124	N 03° 55' 51" E	463.47'
L125	N 49° 19' 26" W	154.19'
L126	S 85° 41' 36" W	42.42'
L127	N 49° 19' 10" W	131.48'
L128	N 04° 14' 30" W	42.33'
L129	N 49° 18' 30" W	127.57'
L130	N 62° 27' 56" W	127.89'
L131	N 24° 29' 26" E	30.04'
L132	N 24° 29' 26" E	85.39'
L133	S 24° 29' 26" W	38.05'
L134	S 39° 57' 20" E	132.51'
L135	S 61° 13' 56" E	155.47'
L136	S 53° 10' 51" E	87.44'
L137	S 44° 35' 05" E	185.19'
L138	N 22° 25' 16" W	110.89'
L139	N 68° 08' 36" E	124.97'
L140	N 82° 44' 40" W	390.53'

LEGEND

●	IRON ROD FOUND 1/2" IN DIAMETER OR OTHERWISE NOTED
◉	IRON ROD FOUND W/CAP 1/2" IN DIAMETER OR OTHERWISE NOTED
◎	IRON ROD PREVIOUSLY SET W/CAP STAMPED "INLAND GEODETICS" 1/2" IN DIAMETER
■	TXDOT TYPE I CONCRETE MONUMENT
⊛	MAG NAIL FOUND W/WASHER NOTED
△	CALCULATED POINT
—X—	WIRE FENCE
POB	POINT OF BEGINNING
ESMT	EASEMENT
R.O.W.	RIGHT OF WAY
OPR	OFFICIAL PUBLIC RECORDS OF WILLIAMSON COUNTY, TEXAS
DR	DEED RECORDS OF WILLIAMSON COUNTY, TEXAS

SKETCH TO ACCOMPANY DESCRIPTION OF EASEMENT

SHOWING PROPERTY OF

WOOD AVANT INVESTMENTS LTD.

PROJECT: S LAKE TO S FORK INTERCEPTOR
WILLIAMSON COUNTY

INLAND GEODETICS
Land Surveyors
1504 CHISHOLM TRAIL RD., #103
ROUND ROCK, TX 78681
512-238-1200
FIRM REG. NO. 100591-00

SHEET 17 OF 18

CDMS-003 5/2/2024

P:\PROJECTS\CDM SMITH (CDMS)\CDMS-003 - S. LAKE WTP TO SF INTERCEPTOR WW SYST EXPANSION\4-DRAWINGS\ESMT\CDMS-003-ESMT P2-WOOD AVANT INVESTMENTS LTD.DWG

BB

EXHIBIT _____

NOTES:

1. BEARINGS ARE BASED ON THE TEXAS COORDINATE SYSTEM OF 1983, CENTRAL ZONE, NAD83 (2011). ALL DISTANCES SHOWN HEREON ARE SURFACE VALUES REPRESENTED IN U.S. SURVEY FEET BASED ON A SURFACE-TO-GRID COMBINED ADJUSTMENT FACTOR OF 0.9998673234.
2. REFERENCE IS HEREON MADE TO THE METES AND BOUNDS DESCRIPTION OF THIS TRACT ACCOMPANYING THIS SKETCH.
3. THE SUBJECT TRACT SHOWN HEREON IS AN EASEMENT, MONUMENTS WERE NOT SET FOR CORNERS.
4. THIS SURVEY WAS MADE WITHOUT THE BENEFIT OF AN ABSTRACT OF TITLE NOR A TITLE COMMITMENT OR TITLE POLICY. THERE MAY BE ADDITIONAL EASEMENTS OR RESTRICTIONS, NOT SHOWN HEREON, WHICH MAY AFFECT THE PROPERTY.

THIS IS TO CERTIFY THAT THIS SURVEY WAS MADE ON THE GROUND IN FEBRUARY THROUGH NOVEMBER, 2023, BY ME OR UNDER MY SUPERVISION, THAT THIS SURVEY PLAT REPRESENTS THE FACTS FOUND AT THE TIME OF THE SURVEY.

INLAND GEODETICS

MIGUEL A. ESCOBAR, L.S.L.S., R.P.L.S.
TEXAS REG. NO. 5630

STATE OF TEXAS
REGISTERED
MIGUEL ANGEL ESCOBAR
5630
PROFESSIONAL
LAND SURVEYOR

INLAND GEODETICS
Land Surveyors

SKETCH TO ACCOMPANY DESCRIPTION OF EASEMENT

SHOWING PROPERTY OF

WOOD AVANT INVESTMENTS LTD.

PROJECT: S LAKE TO S FORK INTERCEPTOR
WILLIAMSON COUNTY

1504 CHISHOLM TRAIL RD., #103
ROUND ROCK, TX 78681
512-238-1200
FIRM REG. NO. 100591-00

SHEET 18 OF 18

CDMS-003 5/2/2024

BB P:\PROJECTS\CDM SMITH (CDMS)\CDMS-003 - S. LAKE WTP TO SF INTERCEPTOR WW SYST EXPANSION\4-DRAWINGS\ESMT\CDMS-003-ESMT P2-WOOD AVANT INVESTMENTS LTD.DWG

Temporary Construction Easement

P2 – Wood Avant Investments, LTD

Exhibit " "
0.0632 Acres (2752 Square Feet)
Isaac Donagan Survey, Abstract No. 178
Williamson County, Texas

DESCRIPTION OF EASEMENT

DESCRIPTION OF A 0.0632 ACRE (2752 SQUARE FOOT) TRACT OF LAND, LOCATED IN THE ISAAC DONAGAN SURVEY, ABSTRACT NO. 178, WILLIAMSON COUNTY, TEXAS, , BEING A PORTION OF THAT CERTAIN CALLED 2055.12 ACRE TRACT OF LAND, SAVE AND EXCEPT A CALLED 15 ACRE TRACT OF LAND, A CALLED 30 ACRE TRACT OF LAND, A CALLED 90 ACRE TRACT OF LAND, AND A CALLED 18.522 ACRE TRACT OF LAND, DESCRIBED AS TRACT I IN A SPECIAL WARRANTY DEED TO WOOD AVANT INVESTMENTS, LTD OF RECORD IN DOCUMENT NO. 2020167463, OF THE OFFICIAL PUBLIC RECORDS OF WILLIAMSON COUNTY, TEXAS, AND SUBJECT TO AFFIDAVIT OF CORRECTION RECORDED IN DOCUMENT NO. 2021014531, OF SAID OFFICIAL PUBLIC RECORDS, SAID 0.0632 ACRE (2752 SQUARE FOOT) TRACT OF LAND BEING SURVEYED ON THE GROUND IN FEBRUARY THROUGH NOVEMBER, 2023, UNDER THE DIRECT SUPERVISION OF MIGUEL A. ESCOBAR, LSLS, RPLS, AND BEING MORE PARTICULARLY DESCRIBED BY METES AND BOUNDS AS FOLLOWS:

COMMENCING at a TxDOT Type 1 concrete monument found in the north right of way line of State Highway No. 29, a 100 foot wide right of way, dedicated in Volume 264, Page 82, of the Deed Records of Williamson County, Texas, same line being a south boundary line of said Tract I;

THENCE, South 82°44'40" East, with the said common line of State Highway No. 29 and said Tract I, a distance of 390.53 feet to a calculated point for the southwest corner of a proposed variable width wastewater easement, from which point, a mag nail found for the southerly southeast corner of said Tract I, and the southwest corner of Lot 1, Block A, AMENDED WOOD RANCH SECTION THREE, a subdivision recorded in Cab. L, Slide 204, of the Plat Records of Williamson County, Texas, bears South 82°44'40" East, a distance of 2033.19 feet;

THENCE, over and across the interior of said Tract I, with the westerly line of said proposed variable width wastewater easement, the following twenty-seven (27) courses:

1. North 07°15'20" East, a distance of 64.91 feet to a calculated point;
2. North 20°46'20" East, a distance of 88.42 feet to a calculated point;
3. North 12°45'19" West, a distance of 154.27 feet to a calculated point;
4. North 05°23'51" West, a distance of 52.45 feet to a calculated point;
5. North 04°29'37" West, a distance of 85.08 feet to a calculated point;
6. North 00°08'58" East, a distance of 63.00 feet to a calculated point;
7. North 00°00'00" West, a distance of 27.15 feet to a calculated point;
8. North 02°02'26" East, a distance of 203.51 feet to a calculated point;
9. North 00°54'31" West, a distance of 75.48 feet to a calculated point;

10. North 07°02'39" West, a distance of 97.75 feet to a calculated point;
11. North 11°38'22" West, a distance of 65.85 feet to a calculated point;
12. North 13°37'58" West, a distance of 174.84 feet to a calculated point;
13. North 13°37'11" West, a distance of 177.95 feet to a calculated point;
14. North 13°41'40" West, a distance of 340.88 feet to a calculated point;
15. North 13°38'07" West, a distance of 70.80 feet to a calculated point;
16. North 13°40'11" West, a distance of 740.43 feet to a calculated point;
17. North 12°38'35" West, a distance of 87.30 feet to a calculated point;
18. North 08°22'36" West, a distance of 27.07 feet to a calculated point;
19. North 06°54'33" West, a distance of 62.16 feet to a calculated point;
20. North 04°40'27" West, a distance of 75.59 feet to a calculated point;
21. North 00°29'30" West, a distance of 34.19 feet to a calculated point;
22. North 00°49'48" East, a distance of 29.35 feet to a calculated point;
23. North 02°52'54" East, a distance of 68.96 feet to a calculated point;
24. North 06°23'29" East, a distance of 66.49 feet to a calculated point;
25. North 10°38'50" East, a distance of 100.46 feet to a calculated point;
26. North 13°24'42" East, a distance of 39.86 feet to a calculated point;
27. North 13°11'06" East, a distance of 79.30 feet to a calculated point for the southeast corner and **POINT OF BEGINNING** of the herein described tract;

THENCE, leaving the westerly line of said proposed variable width wastewater easement, and over and across the interior of said Tract 1, the following seven (7) courses:

(1) **North 77°34'37" West**, a distance of **18.88 feet** to a calculated point for the southwest corner of the herein described tract;
(2) **North 12°52'52" East**, a distance of **45.24 feet** to a calculated angle point of the herein described tract;
(3) **South 78°29'39" East**, a distance of **17.12 feet** to a calculated angle point of the herein described tract;
(4) **North 13°11'06" East**, a distance of **20.72 feet** to a calculated angle point of the herein described tract;
(5) **North 77°15'53" West**, a distance of **31.55 feet** to a calculated angle point of the herein described tract;
(6) **North 12°39'54" East**, a distance of **53.80 feet** to a calculated angle point for the northwest corner of the herein described tract;
(7) **South 80°16'43" East**, a distance of **34.10 feet** to a calculated point in the westerly line of said proposed variable width wastewater easement for the northeast corner of the herein described tract;

(8) THENCE, South 13°11'06" West, with the westerly line of said proposed variable width wastewater easement, a distance of **121.83 feet** to the **POINT OF BEGINNING** and containing 0.0632 acres of land, more or less, within these metes and bounds.

Bearings are based on the Texas Coordinate System of 1983, Central Zone, NAD 83 (2011). All distances are surface values represented in US Survey Feet based on a Surface-to-Grid Combined Adjustment Factor of 0.9998673234.

The use of the word "certify" or "certification" on this document only constitutes an expression of professional opinion regarding those facts or findings which are the subject of the certification, and does not constitute a warranty or guarantee, either expressed or implied.

The subject tract shown hereon is an easement, monuments were not set for corners.

The foregoing metes and bounds description, and survey on which it was based, is accompanied by and a part of a survey map of the subject tract.

That I, Miguel A. Escobar, a Registered Professional Land Surveyor, do hereby certify that the above description and the accompanying sketch is true and correct to the best of my knowledge and belief and the property described herein was determined by a survey made on the ground during the months of February through November, 2023, under my direct supervision.

WITNESS MY HAND AND SEAL at Round Rock, Williamson County, Texas on this 2nd of May, 2024, A.D.

INLAND GEODETICS

Miguel A. Escobar, L.S.L.S., R.P.L.S.
Texas Reg. No. 5630
1504 Chisholm Trail Rd #103
Round Rock, TX 78681
TBPELS Firm No. 10059100

P:\Projects\CDM Smith (CDMS)\CDMS-003 - S. Lake WTP To SF Interceptor WW Syst Expansion\5-Descriptions-Reports\ESMT\TCE PART 2-WOOD AVANT INVESTMENTS LTD\CDMS-003-TCE P2-WOOD AVANT INVESTMENTS LTD.docx

EXHIBIT _____

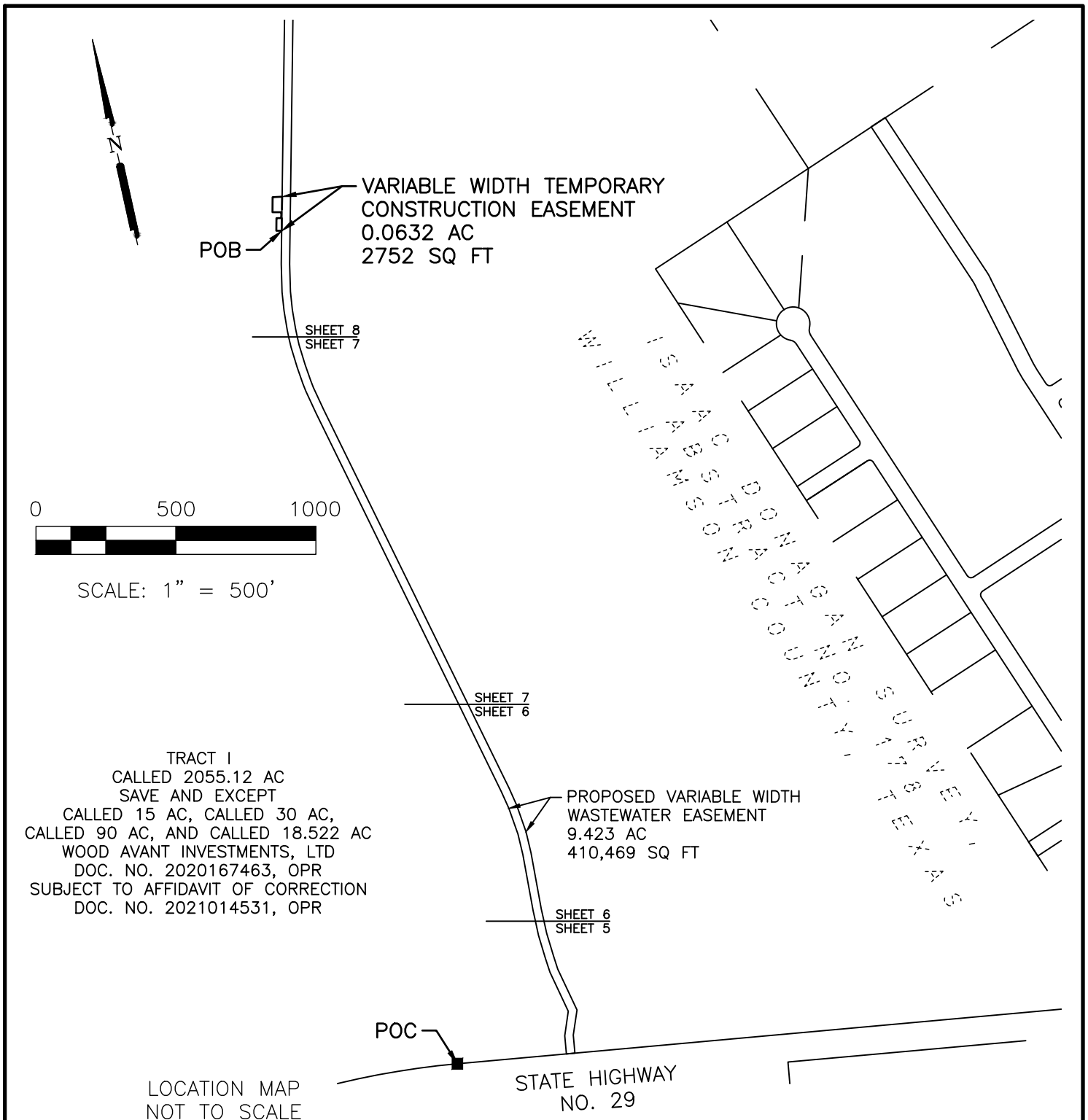

LOCATION MAP
NOT TO SCALE

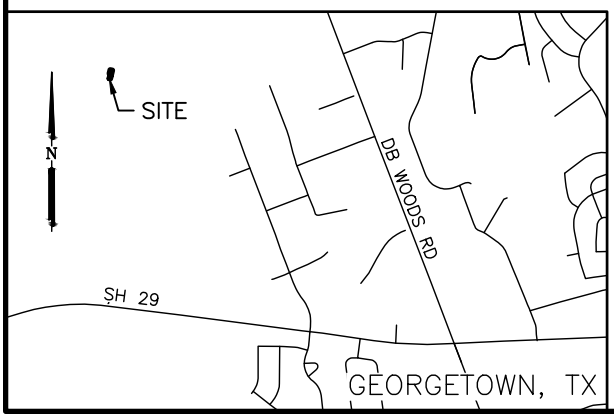

SEE LINE TABLE SHEET 9

SKETCH TO ACCOMPANY DESCRIPTION OF EASEMENT

SHOWING PROPERTY OF

WOOD AVANT INVESTMENTS LTD

PROJECT: S LAKE TO S FORK INTERCEPTOR
WILLIAMSON COUNTY

INLAND GEODETICS
Land Surveyors
1504 CHISHOLM TRAIL RD., #103
ROUND ROCK, TX 78681
512-238-1200
FIRM REG. NO. 100591-00

SHEET 4 OF 9

CDMS-003 5/2/2024

P:\PROJECTS\CDM SMITH (CDMS)\CDMS-003 - S. LAKE WTP TO SF INTERCEPTOR WW SYST EXPANSION\4-DRAWINGS\ESMT\CDMS-003-TCE P2-WOOD AVANT INVESTMENTS.DWG

BB

EXHIBIT _____

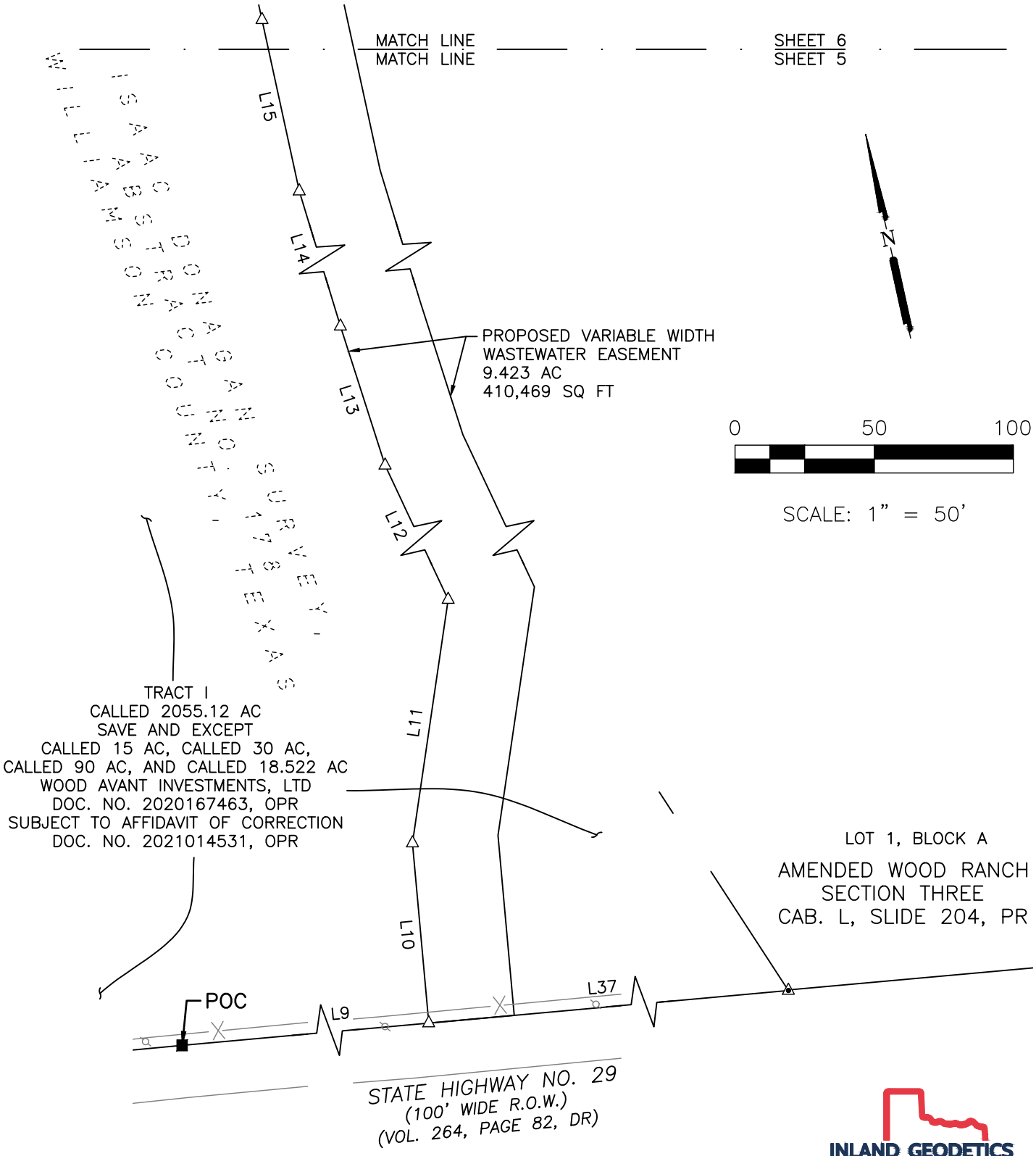

SEE LINE TABLE SHEET 9
SEE LEGEND SHEET 9

SKETCH TO ACCOMPANY DESCRIPTION OF EASEMENT

SHOWING PROPERTY OF

WOOD AVANT INVESTMENTS LTD

PROJECT: S LAKE TO S FORK INTERCEPTOR
WILLIAMSON COUNTY

INLAND GEODETICS
Land Surveyors
1504 CHISHOLM TRAIL RD., #103
ROUND ROCK, TX 78681
512-238-1200
FIRM REG. NO. 100591-00

SHEET 5 OF 9

CDMS-003 5/2/2024

P:\PROJECTS\CDM SMITH (CDMS)\CDMS-003 - S. LAKE WTP TO SF INTERCEPTOR WW SYST EXPANSION\4-DRAWINGS\ESMT\CDMS-003-TCE P2-WOOD AVANT INVESTMENTS.DWG

BB

EXHIBIT _____

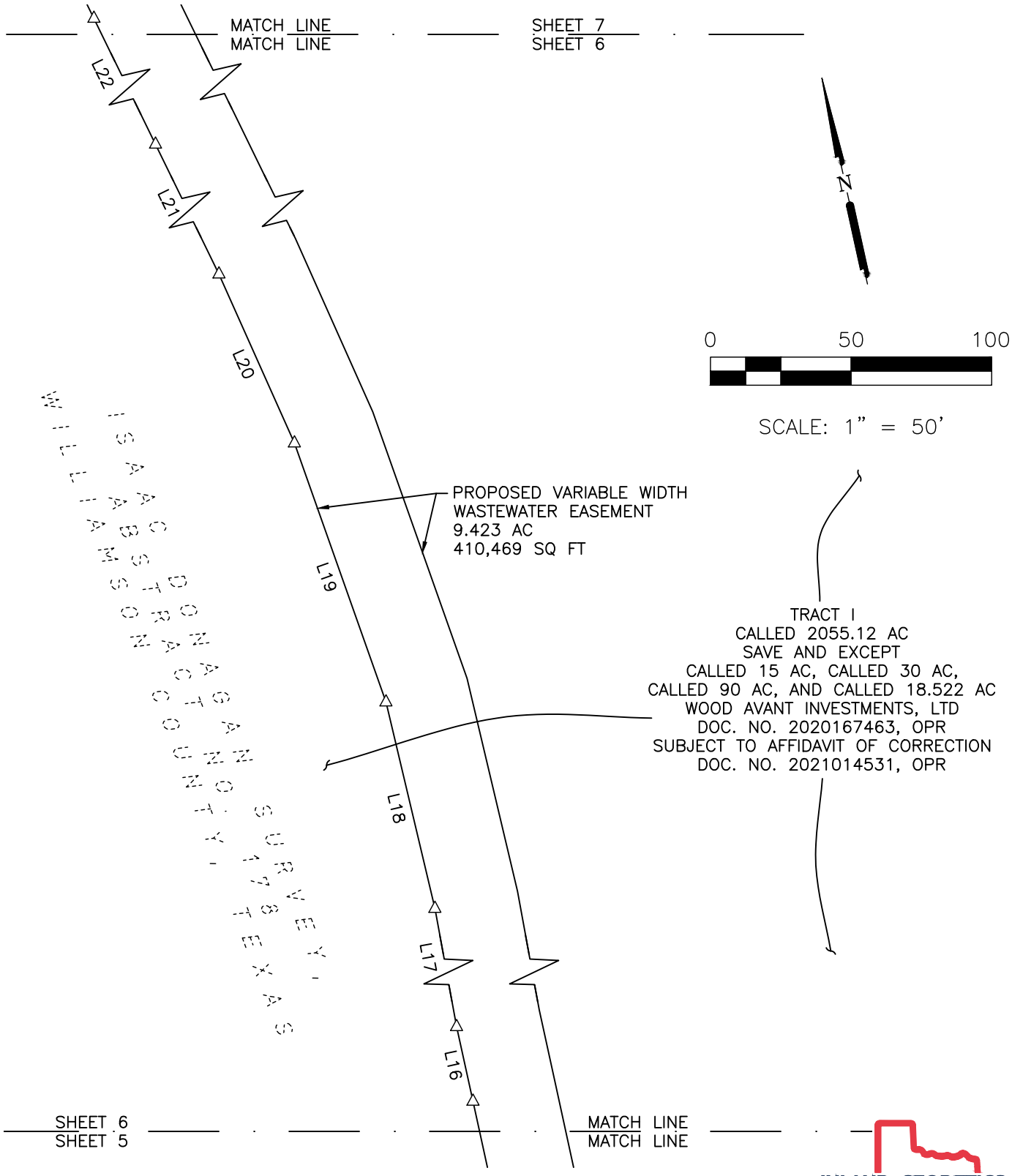

SEE LINE TABLE SHEET 9
SEE LEGEND SHEET 9

SKETCH TO ACCOMPANY DESCRIPTION OF EASEMENT

SHOWING PROPERTY OF

WOOD AVANT INVESTMENTS LTD

PROJECT: S LAKE TO S FORK INTERCEPTOR
WILLIAMSON COUNTY

INLAND GEODETICS
Land Surveyors
1504 CHISHOLM TRAIL RD., #103
ROUND ROCK, TX 78681
512-238-1200
FIRM REG. NO. 100591-00

SHEET 6 OF 9

CDMS-003 5/2/2024

P:\PROJECTS\CDM SMITH (CDMS)\CDMS-003 - S. LAKE WTP TO SF INTERCEPTOR WW SYST EXPANSION\4-DRAWINGS\ESMT\CDMS-003-TCE P2-WOOD AVANT INVESTMENTS.DWG

BB

EXHIBIT _____

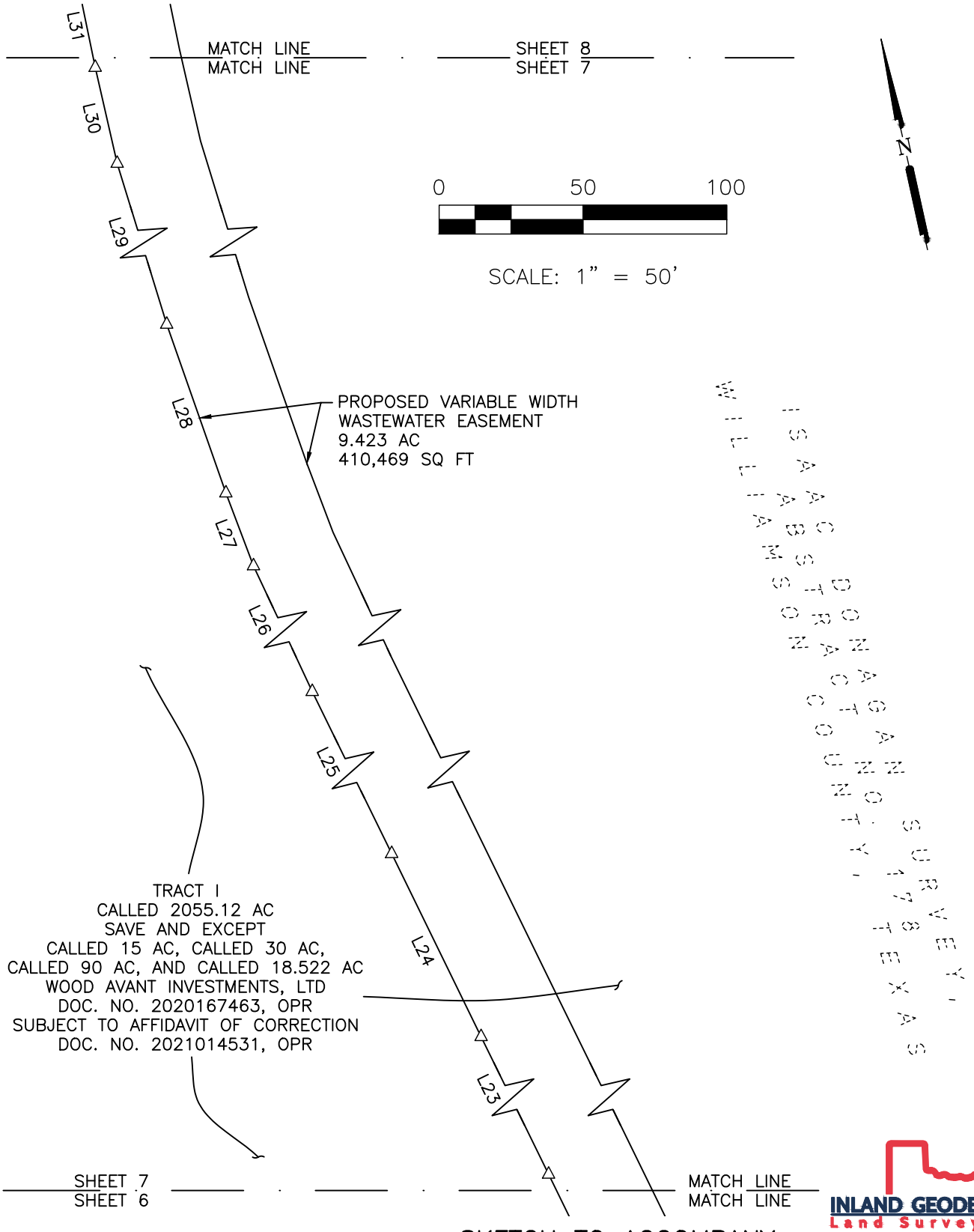

SKETCH TO ACCOMPANY DESCRIPTION OF EASEMENT

SHOWING PROPERTY OF

WOOD AVANT INVESTMENTS LTD

PROJECT: S LAKE TO S FORK INTERCEPTOR

WILLIAMSON COUNTY

SEE LINE TABLE SHEET 9
SEE LEGEND SHEET 9

INLAND GEODETICS
Land Surveyors
1504 CHISHOLM TRAIL RD., #103
ROUND ROCK, TX 78681
512-238-1200
FIRM REG. NO. 100591-00

SHEET 7 OF 9

CDMS-003 5/2/2024

P:\PROJECTS\CDM SMITH (CDMS)\CDMS-003 - S. LAKE WTP TO SF INTERCEPTOR WW SYST EXPANSION\4-DRAWINGS\ESMT\CDMS-003-TCE P2-WOOD AVANT INVESTMENTS.DWG

BB

EXHIBIT _____

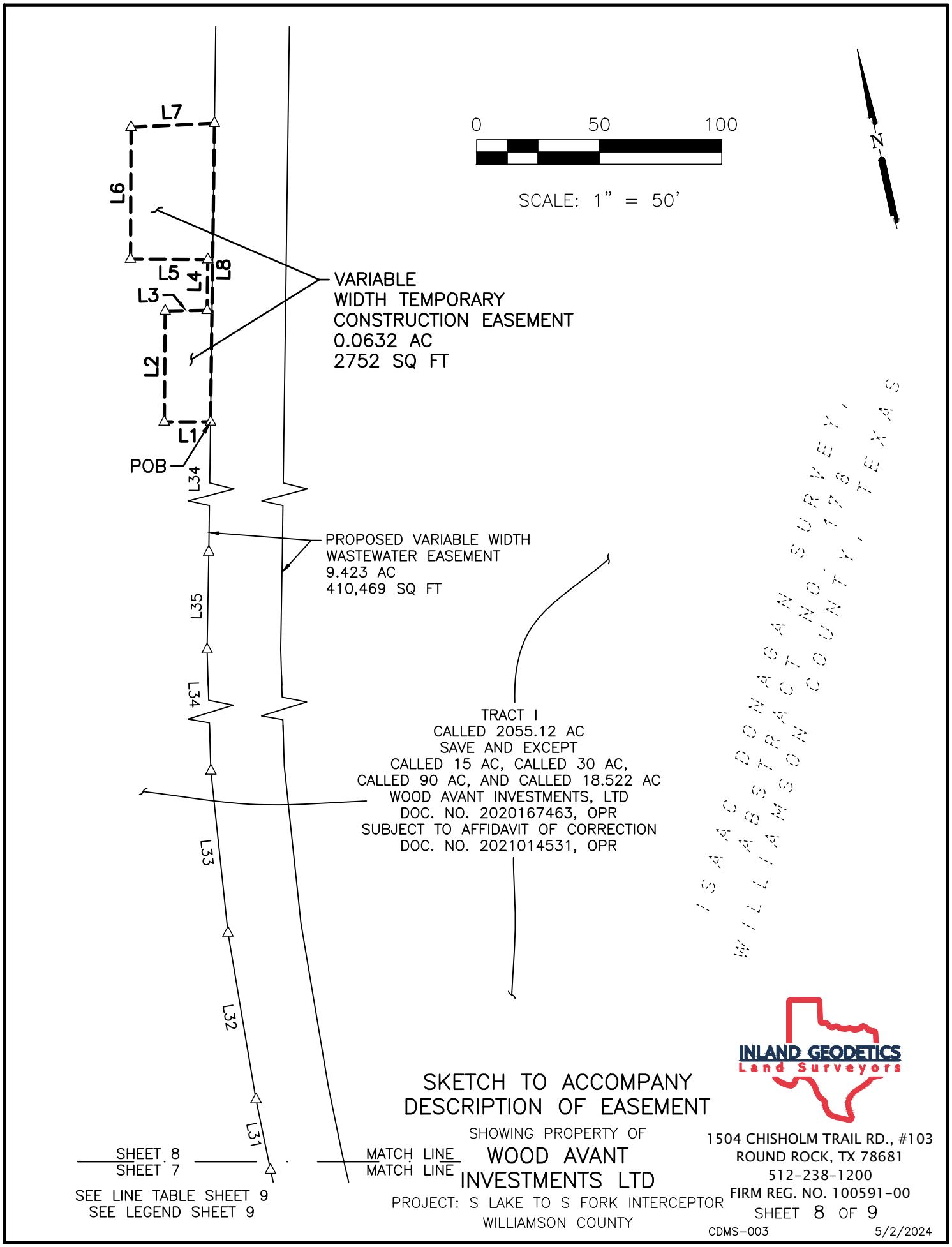

SKETCH TO ACCOMPANY
DESCRIPTION OF EASEMENT

SHOWING PROPERTY OF
WOOD AVANT
INVESTMENTS LTD

PROJECT: S LAKE TO S FORK INTERCEPTOR
WILLIAMSON COUNTY

P:\PROJECTS\CDM SMITH (CDMS)\CDMS-003 - S. LAKE WTP TO SF INTERCEPTOR WW SYST EXPANSION\4-DRAWINGS\ESMT\CDMS-003-TCE P2-WOOD AVANT INVESTMENTS.DWG

BB

EXHIBIT _____

LEGEND

■	TXDOT TYPE I CONCRETE MONUMENT
◆	MAG NAIL FOUND W/WASHER NOTED
△	CALCULATED POINT
—X—	WIRE FENCE
POB	POINT OF BEGINNING
POC	POINT OF COMMENCING
ESMT	EASEMENT
R.O.W.	RIGHT OF WAY
OPR	OFFICIAL PUBLIC RECORDS OF WILLIAMSON COUNTY, TEXAS
DR	DEED RECORDS OF WILLIAMSON COUNTY, TEXAS

NO.	BEARING	DISTANCE
L1	N 77° 34' 37" W	18.88'
L2	N 12° 52' 52" E	45.24'
L3	S 78° 29' 39" E	17.12'
L4	N 13° 11' 06" E	20.72'
L5	N 77° 15' 53" W	31.55'
L6	N 12° 39' 54" E	53.80'
L7	S 80° 16' 43" E	34.10'
L8	S 13° 11' 06" W	121.83'
L9	S 82° 44' 40" E	390.53'
L10	N 07° 15' 20" E	64.91'
L11	N 20° 46' 20" E	88.42'
L12	N 12° 45' 19" W	154.27'
L13	N 05° 23' 51" W	52.45'
L14	N 04° 29' 37" W	85.08'
L15	N 00° 08' 58" E	63.00'
L16	N 00° 00' 00" W	27.15'
L17	N 02° 02' 26" E	203.51'
L18	N 00° 54' 31" W	75.48'
L19	N 07° 02' 39" W	97.75'
L20	N 11° 38' 22" W	65.85'
L21	N 13° 37' 58" W	174.84'
L22	N 13° 37' 11" W	177.95'
L23	N 13° 41' 40" W	340.88'
L24	N 13° 38' 07" W	70.80'
L25	N 13° 40' 11" W	740.43'
L26	N 12° 38' 35" W	87.30'
L27	N 08° 22' 36" W	27.07'
L28	N 06° 54' 33" W	62.16'
L29	N 04° 40' 27" W	75.59'
L30	N 00° 29' 30" W	34.19'
L31	N 00° 49' 48" E	29.35'
L32	N 02° 52' 54" E	68.96'
L33	N 06° 23' 29" E	66.49'
L34	N 10° 38' 50" E	100.46'
L35	N 13° 24' 42" E	39.86'
L36	N 13° 11' 06" E	79.30'
L37	S 82° 44' 40" E	2033.19'

NOTES:

1. BEARINGS ARE BASED ON THE TEXAS COORDINATE SYSTEM OF 1983, CENTRAL ZONE, NAD83 (2011). ALL DISTANCES SHOWN HEREON ARE SURFACE VALUES REPRESENTED IN U.S. SURVEY FEET BASED ON A SURFACE-TO-GRID COMBINED ADJUSTMENT FACTOR OF 0.9998673234.
2. REFERENCE IS HEREON MADE TO THE METES AND BOUNDS DESCRIPTION OF THIS TRACT ACCOMPANYING THIS SKETCH.
3. THE SUBJECT TRACT SHOWN HEREON IS AN EASEMENT, MONUMENTS WERE NOT SET FOR CORNERS.
4. THIS SURVEY WAS MADE WITHOUT THE BENEFIT OF AN ABSTRACT OF TITLE NOR A TITLE COMMITMENT OR TITLE POLICY. THERE MAY BE ADDITIONAL EASEMENTS OR RESTRICTIONS, NOT SHOWN HEREON, WHICH MAY AFFECT THE PROPERTY.

THIS IS TO CERTIFY THAT THIS SURVEY WAS MADE ON THE GROUND IN FEBRUARY THROUGH NOVEMBER, 2023, BY ME OR UNDER MY SUPERVISION, THAT THIS SURVEY PLAT REPRESENTS THE FACTS FOUND AT THE TIME OF THE SURVEY.

INLAND GEODETICS

MIGUEL A. ESCOBAR, L.S.L.S., R.P.L.S.
TEXAS REG. NO. 5630

STATE OF TEXAS
REGISTERED
MIGUEL ANGEL ESCOBAR
5630
PROFESSIONAL
LAND SURVEYOR

INLAND GEODETICS
Land Surveyors

SKETCH TO ACCOMPANY DESCRIPTION OF EASEMENT

SHOWING PROPERTY OF

WOOD AVANT INVESTMENTS LTD

PROJECT: S LAKE TO S FORK INTERCEPTOR
WILLIAMSON COUNTY

1504 CHISHOLM TRAIL RD., #103
ROUND ROCK, TX 78681
512-238-1200
FIRM REG. NO. 100591-00

SHEET 9 OF 9

CDMS-003 5/2/2024

P:\PROJECTS\CDM SMITH (CDMS)\CDMS-003 - S. LAKE WTP TO SF INTERCEPTOR WW SYST EXPANSION\4-DRAWINGS\ESMT\CDMS-003-TCE P2-WOOD AVANT INVESTMENTS.DWG

BB

Easement

H4 Georgetown, LP

Exhibit " "
0.3541 Acres (15,423 Square Feet)
Joseph Thompson Survey, Abstract No. 608
Williamson County, Texas

DESCRIPTION OF EASEMENT

DESCRIPTION OF A 0.3541 ACRE (15,423 SQUARE FOOT) TRACT OF LAND, LOCATED IN THE JOSEPH THOMPSON SURVEY, ABSTRACT NO. 608, WILLIAMSON COUNTY, TEXAS, BEING A PORTION OF THE REMAINDER OF THAT CERTAIN CALLED 128.974 ACRE TRACT OF LAND DESCRIBED AS TRACT 1 IN A SPECIAL WARRANTY DEED TO H4 GEORGETOWN, LP OF RECORD IN DOCUMENT NO. 2018054155, OF THE OFFICIAL PUBLIC RECORDS OF WILLIAMSON COUNTY, TEXAS, SAID 0.3541 ACRE (15,423 SQUARE FOOT) TRACT OF LAND BEING SURVEYED ON THE GROUND IN MARCH, 2024, UNDER THE DIRECT SUPERVISION OF MIGUEL A. ESCOBAR, LSLS, RPLS, AND BEING MORE PARTICULARLY DESCRIBED BY METES AND BOUNDS AS FOLLOWS:

COMMENCING at a 1/2-inch iron rod with an aluminum cap found in the west right-of-way line of Southwest Bypass, a variable width right-of-way, dedicated in Document No. 2015010273, of said Official Public Records, for an angle point of that certain called 64.920 acres of land described as Tract 4 in a Special Warranty Deed to H4 Georgetown Phase 1, LLC in Document No. 2020157115, of said Official Public Records, from which point, a 1/2-inch iron rod found bears North 59°53'57" West, a distance of 126.24 feet;

THENCE, South 22°24'13" East, with said west right-of-way line of Southwest Bypass, at a distance of 684.02 feet, pass a 1/2-inch iron rod found with aluminum cap, and continuing for a total distance of 763.82 feet to a calculated point in the centerline of the South Fork of the San Gabriel River for the southeast corner of said Tract 4;

THENCE, with said centerline of the South Fork of the San Gabriel River, same line being a southeasterly boundary line of said Tract 4, South 61°01'05" West, a distance of 176.71 feet to a calculated point for an angle point of said Tract 4;

THENCE, with the southwesterly boundary line of said Tract 4, the following two (2) courses:

1. South 89°32'48" West, a distance of 1220.16 feet to a calculated point;
2. North 62°46’52" West, a distance of 712.49 feet to a calculated point for the southeast corner and **POINT OF BEGINNING** of the herein described tract;

THENCE, over and across the interior of said remainder of Tract 1, the following two (2) courses:

(1) **South 89°20'18" West,** a distance of **400.64 feet** to a calculated angle point of the herein described tract;
(2) **South 72°29'04" West**, a distance of **111.53 feet** to a calculated point in the east line of a 100 foot wide wastewater easement described in Document No. 2007088686, of said Official Public Records, for the southwest corner of the herein described tract;

(3) **THENCE, North 05°09'13" East**, with said west line of the 100 foot wide wastewater easement a distance of **49.13 feet** to a calculated point in the projection of the south line of a 20 foot wide wastewater easement described in Document No. 2024022261, of said Official Public Records, for the northwest corner of the herein described tract;

THENCE, over and across said interior of the remainder of said Tract 1, with said projection and the south line of said 20 foot wide wastewater easement, the following two (2) courses:

(4) **North 78°47'40" East**, with said south line of the 20 foot wide wastewater easement, a distance of **73.57 feet** to a calculated angle point of the herein described tract;

(5) **North 89°20'18" East**, with said south line of the 20 foot wide wastewater easement, a distance of **373.37 feet** to a calculated point in the aforementioned southwesterly boundary line of Tract 4 for the northeast corner of the herein described tract;

(6) **THENCE, South 62°46'52" East**, with said southwesterly boundary line of Tract 4, a distance of **64.15 feet** to the **POINT OF BEGINNING** and containing 0.3541 acres (15,423 Square Feet) of land, more or less, within these metes and bounds.

Bearings are based on the Texas Coordinate System of 1983, Central Zone, NAD 83 (2011). All distances are surface values represented in US Survey Feet based on a Surface-to-Grid Combined Adjustment Factor of 0.9998673234.

The use of the word “certify” or “certification” on this document only constitutes an expression of professional opinion regarding those facts or findings which are the subject of the certification, and does not constitute a warranty or guarantee, either expressed or implied.

The subject tract shown hereon is an easement, monuments were not set for corners.

Together with a 60 foot wide (0.7886 acres, 34,352 Sq. Ft.) Temporary Construction Easement being adjacent to, parallel with, and southerly to course 1 and 2, as shown on the attached survey map of the subject tract.

The foregoing metes and bounds description, and survey on which it was based, is accompanied by and a part of a survey map of the subject tract.

I, Miguel A. Escobar, a Registered Professional Land Surveyor, do hereby certify that the above description and the accompanying sketch is true and correct to the best of my knowledge and belief and the property described herein was determined by a survey made on the ground during the month of March, 2024, under my direct supervision.

WITNESS MY HAND AND SEAL at Round Rock, Williamson County, Texas on this 2nd of May, 2024, A.D.

INLAND GEODETICS

Miguel A. Escobar, L.S.L.S., R.P.L.S.
Texas Reg. No. 5630
1504 Chisholm Trail Rd #103
Round Rock, TX 78681
TBPELS Firm No. 10059100

P:\Projects\CDM Smith (CDMS)\CDMS-003 - S. Lake WTP To SF Interceptor WW Syst Expansion\5-Descriptions-Reports\ESMT\H4 GEORGETOWN LP\CDMS-003-ESMT-H4 GEORGETOWN LP.docx

EXHIBIT _____

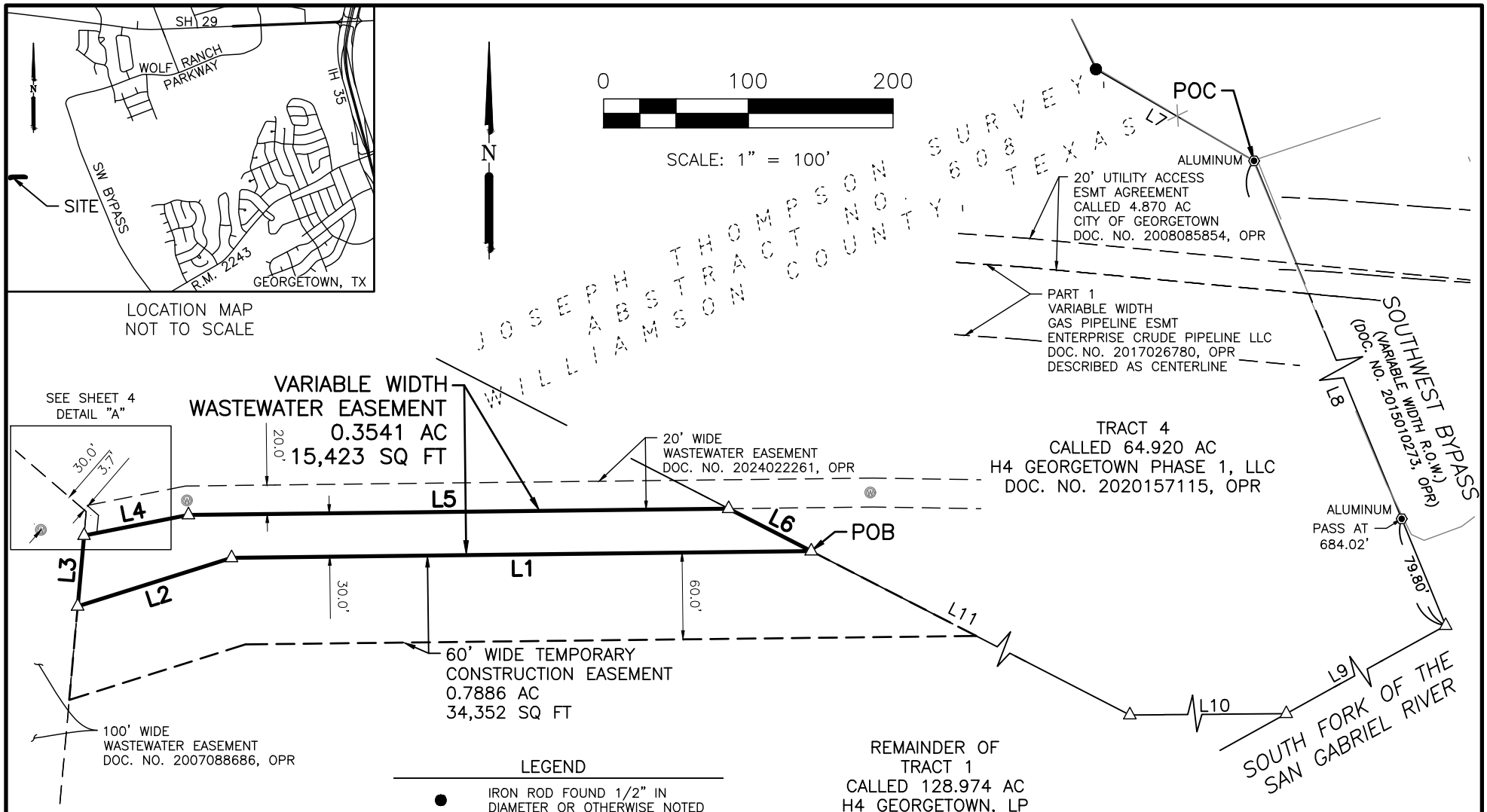

NO.	BEARING	DISTANCE
L1	S 89° 20' 18" W	400.64'
L2	S 72° 29' 04" W	111.53'
L3	N 05° 09' 13" E	49.13'
L4	N 78° 47' 40" E	73.57'
L5	N 89° 20' 18" E	373.37'
L6	S 62° 46' 52" E	64.15'
L7	N 59° 53' 57" W	126.24'
L8	S 22° 24' 13" E	763.82'
L9	S 61° 01' 05" W	176.71'
L10	S 89° 32' 48" W	1220.16'
L11	N 62° 46' 52" W	712.49'

LEGEND

●	IRON ROD FOUND 1/2" IN DIAMETER OR OTHERWISE NOTED
◉	IRON ROD FOUND W/CAP 1/2" IN DIAMETER OR OTHERWISE NOTED
△	CALCULATED POINT
—X—	WIRE FENCE
—⌄—	SILT FENCE
Ⓦ	WASTEWATER MANHOLE
POB	POINT OF BEGINNING
ESMT	EASEMENT
R.O.W.	RIGHT OF WAY
OPR	OFFICIAL PUBLIC RECORDS OF WILLIAMSON COUNTY, TEXAS
PR	PLAT RECORDS OF WILLIAMSON COUNTY, TEXAS
DR	DEED RECORDS OF WILLIAMSON COUNTY, TEXAS

SKETCH TO ACCOMPANY DESCRIPTION OF EASEMENT

SHOWING PROPERTY OF

H4 GEORGETOWN, LP

PROJECT: S LAKE WTP TO SF INTERCEPTOR
WILLIAMSON COUNTY

INLAND GEODETICS
Land Surveyors
1504 CHISHOLM TRAIL RD., #103
ROUND ROCK, TX 78681
512-238-1200
FIRM REG. NO. 100591-00

SHEET 3 OF 4

CDMS-003 5/2/2024

BSM P:\PROJECTS\CDM SMITH (CDMS)\CDMS-003 - S. LAKE WTP TO SF INTERCEPTOR WW SYST EXPANSION\4-DRAWINGS\ESMT\CDMS-003-ESMT-H4 GEORGETOWN.DWG

EXHIBIT _____

DETAIL "A"
NOT TO SCALE

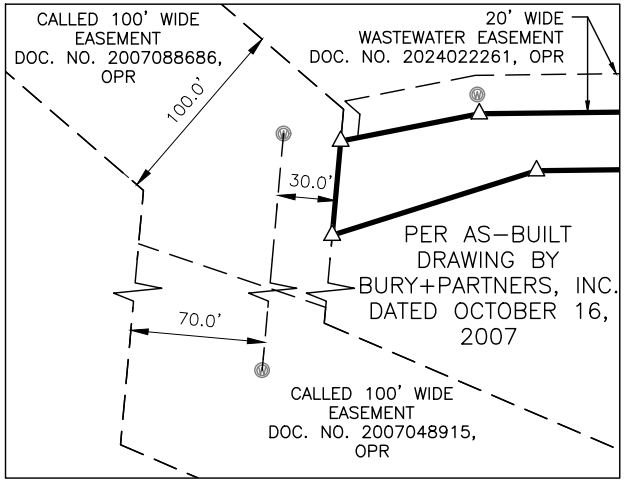

NOTES:

1. BEARINGS ARE BASED ON THE TEXAS COORDINATE SYSTEM OF 1983, CENTRAL ZONE, NAD83 (2011). ALL DISTANCES SHOWN HEREON ARE SURFACE VALUES REPRESENTED IN U.S. SURVEY FEET BASED ON A SURFACE-TO-GRID COMBINED ADJUSTMENT FACTOR OF 0.9998673234.

2. THIS SURVEY WAS MADE WITHOUT THE BENEFIT OF AN ABSTRACT OF TITLE NOR A TITLE COMMITMENT OR TITLE POLICY. THERE MAY BE ADDITIONAL EASEMENTS OR RESTRICTIONS, NOT SHOWN HEREON, WHICH MAY AFFECT THE PROPERTY.

3. REFERENCE IS HEREON MADE TO THE METES AND BOUNDS DESCRIPTION OF THIS TRACT ACCOMPANYING THIS SKETCH.

4. THE SUBJECT TRACT SHOWN HEREON IS AN EASEMENT, MONUMENTS WERE NOT SET FOR CORNERS.

THIS IS TO CERTIFY THAT THIS SURVEY WAS MADE ON THE GROUND IN MARCH, 2024, BY ME OR UNDER MY SUPERVISION, THAT THIS SURVEY PLAT REPRESENTS THE FACTS FOUND AT THE TIME OF THE SURVEY.

INLAND GEODETICS

MIGUEL A. ESCOBAR, L.S.L.S., R.P.L.S.
TEXAS REG. NO. 5630

STATE OF TEXAS
REGISTERED
MIGUEL ANGEL ESCOBAR
5630
PROFESSIONAL
LAND SURVEYOR

SKETCH TO ACCOMPANY DESCRIPTION OF EASEMENT

SHOWING PROPERTY OF

H4 GEORGETOWN, LP

PROJECT: S LAKE WTP TO SF INTERCEPTOR
WILLIAMSON COUNTY

INLAND GEODETICS
Land Surveyors
1504 CHISHOLM TRAIL RD., #103
ROUND ROCK, TX 78681
512-238-1200
FIRM REG. NO. 100591-00

SHEET 4 OF 4

CDMS-003 5/2/2024

BSM P:\PROJECTS\CDM SMITH (CDMS)\CDMS-003 - S. LAKE WTP TO SF INTERCEPTOR WW SYST EXPANSION\4-DRAWINGS\ESMT\CDMS-003-ESMT-H4 GEORGETOWN.DWG

Easement

H4 Georgetown Phase 1, LLC

Exhibit " "
1.347 Acres (58,666 Square Feet)
Joseph Thompson Survey, Abstract No. 608
Williamson County, Texas

DESCRIPTION OF EASEMENT

DESCRIPTION OF A 1.347 ACRE (58,666 SQUARE FOOT) TRACT OF LAND, LOCATED IN THE JOSEPH THOMPSON SURVEY, ABSTRACT NO. 608, WILLIAMSON COUNTY, TEXAS, BEING A PORTION OF THAT CERTAIN CALLED 64.920 ACRE TRACT OF LAND DESCRIBED AS TRACT 4 IN A SPECIAL WARRANTY DEED TO H4 GEORGETOWN PHASE 1, LLC OF RECORD IN DOCUMENT NO. 2020157115, OF THE OFFICIAL PUBLIC RECORDS OF WILLIAMSON COUNTY, TEXAS, SAID 1.347 ACRE (58,666 SQUARE FOOT) TRACT OF LAND BEING SURVEYED ON THE GROUND IN MARCH, 2024, UNDER THE DIRECT SUPERVISION OF MIGUEL A. ESCOBAR, LSLS, RPLS, AND BEING MORE PARTICULARLY DESCRIBED BY METES AND BOUNDS AS FOLLOWS:

COMMENCING at a 1/2-inch iron rod with an aluminum cap found in the west right-of-way line of Southwest Bypass, a variable width right-of-way, dedicated in Document No. 2015010273, of said Official Public Records, for an angle point in the east boundary line of said Tract 4, from which point, a 1/2-inch iron rod found bears North 59°53'57" West, a distance of 126.24 feet;

THENCE, South 22°24'13" East, with said common line of Southwest Bypass and Tract 4, a distance of 500.28 feet to a calculated point for the northeast corner and **POINT OF BEGINNING** of the herein described tract;

(1) **THENCE, South 22°24'13" East**, with said common line of Southwest Bypass and Tract 4, a distance of **30.24 feet** to a calculated point for the southeast corner of the herein described tract, from which point, a 1/2-inch iron rod with aluminum cap found bears South 22°24'13" East, a distance of 153.50 feet;

THENCE, over and across the interior of said Tract 4, the following four (4) courses:

(2) **South 60°23'52" West**, a distance of **96.41 feet** to a calculated angle point of the herein described tract;
(3) **North 87°35'24" West**, a distance of **1321.06 feet** to a calculated angle point of the herein described tract;
(4) **North 89°05'35" West**, a distance of **472.92 feet** to a calculated angle point of the herein described tract;
(5) **South 89°20'18" West,** a distance of **42.80 feet** to a calculated point in the southwesterly boundary line of said Tract 4 for the southwest corner of the herein described tract;

(6) **THENCE, North 62°46'52" West**, with the southwesterly boundary line of said Tract 4, a distance of **64.15 feet** to a calculated point in the south line of a 20 foot wide wastewater easement described in Document No. 2024022262, of said Official Public Records, for the northwest corner of the herein described tract;

THENCE, with said south line of said 20 foot wide wastewater easement, over and across the interior of said Tract 4, the following four (4) courses:

(7) **North 89°20'18" East**, a distance of **99.92 feet** to a calculated angle point of the herein described tract;
(8) **South 89°05'35" East**, a distance of **473.72 feet** to a calculated angle point of the herein described tract;
(9) **South 87°35'24" East**, a distance of **1312.85 feet** to a calculated angle point of the herein described tract;
(10) **North 60°23'52" East**, a distance of **91.60 feet** to the **POINT OF BEGINNING** and containing 1.347 acres (58,666 Square Feet) of land, more or less, within these metes and bounds.

Bearings are based on the Texas Coordinate System of 1983, Central Zone, NAD 83 (2011). All distances are surface values represented in US Survey Feet based on a Surface-to-Grid Combined Adjustment Factor of 0.9998673234.

The use of the word "certify" or "certification" on this document only constitutes an expression of professional opinion regarding those facts or findings which are the subject of the certification, and does not constitute a warranty or guarantee, either expressed or implied.

The subject tract shown hereon is an easement, monuments were not set for corners.

Together with a 60 foot wide (2.599 acres, 113,224 Sq. Ft.) Temporary Construction Easement being adjacent to, parallel with, and southerly to course 2 through 5, as shown on the attached survey map of the subject tract.

The foregoing metes and bounds description, and survey on which it was based, is accompanied by and a part of a survey map of the subject tract.

I, Miguel A. Escobar, a Registered Professional Land Surveyor, do hereby certify that the above description and the accompanying sketch is true and correct to the best of my knowledge and belief and the property described herein was determined by a survey made on the ground during the month of March, 2024, under my direct supervision.

WITNESS MY HAND AND SEAL at Round Rock, Williamson County, Texas on this 23rd of April, 2024, A.D.

INLAND GEODETICS

STATE OF TEXAS
REGISTERED
MIGUEL ANGEL ESCOBAR
5630
PROFESSIONAL
LAND SURVEYOR

Miguel A. Escobar, L.S.L.S., R.P.L.S.
Texas Reg. No. 5630
1504 Chisholm Trail Rd #103
Round Rock, TX 78681
TBPELS Firm No. 10059100

P:\Projects\CDM Smith (CDMS)\CDMS-003 - S. Lake WTP To SF Interceptor WW Syst Expansion\5-Descriptions-Reports\ESMT\H4 GEORGETOWN PHASE 1 LLC\CDMS-003-ESMT-H4 GEORGETOWN PHASE 1 LLC.docx

EXHIBIT _____

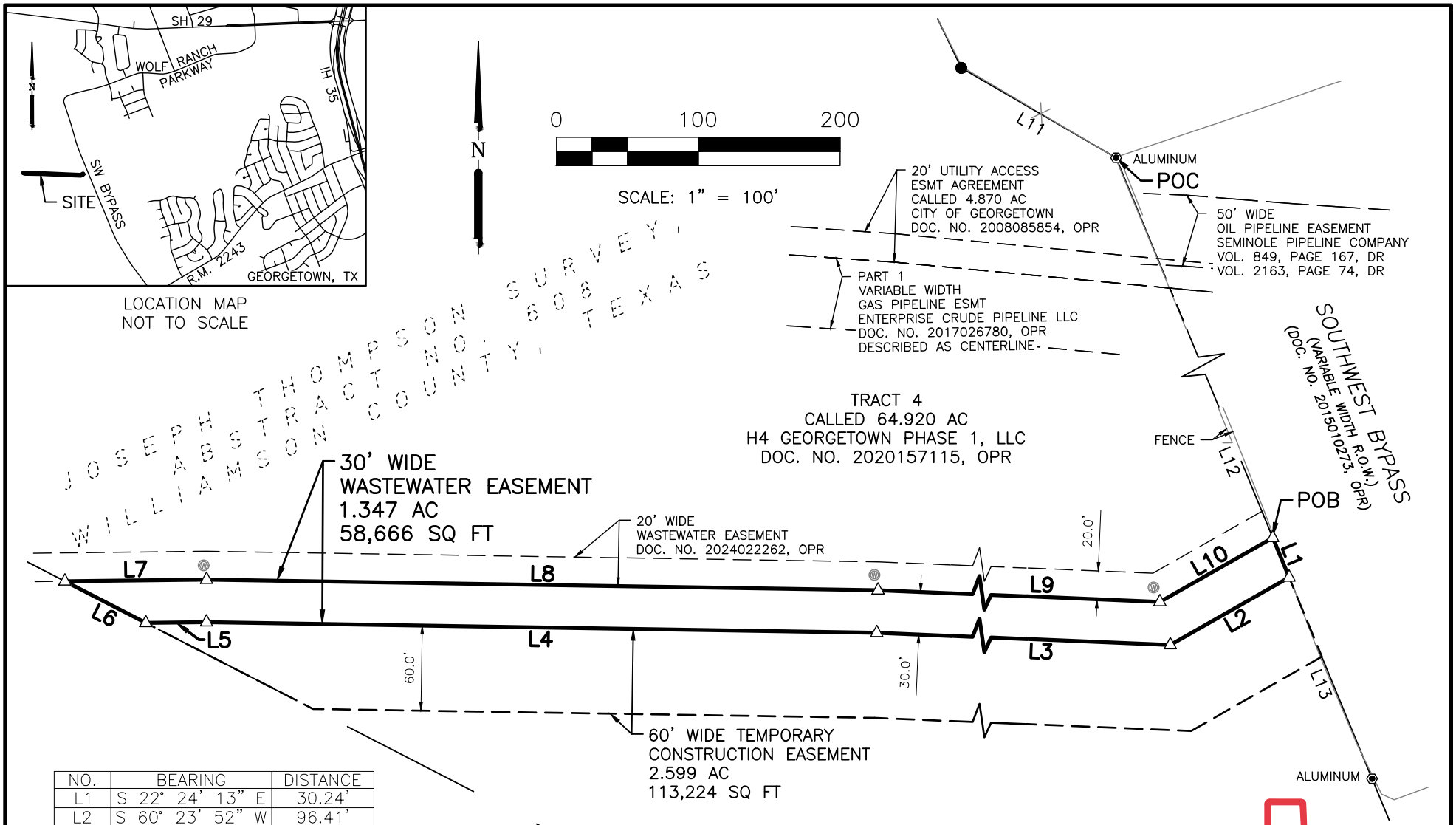

NO.	BEARING	DISTANCE
L1	S 22° 24' 13" E	30.24'
L2	S 60° 23' 52" W	96.41'
L3	N 87° 35' 24" W	1321.06'
L4	N 89° 05' 35" W	472.92'
L5	S 89° 20' 18" W	42.80'
L6	N 62° 46' 52" W	64.15'
L7	N 89° 20' 18" E	99.92'
L8	S 89° 05' 35" E	473.72'
L9	S 87° 35' 24" E	1312.85'
L10	N 60° 23' 52" E	91.60'
L11	N 59° 53' 57" W	126.24'
L12	S 22° 24' 13" E	500.28'
L13	S 22° 24' 13" E	153.50'

SKETCH TO ACCOMPANY DESCRIPTION OF EASEMENT

SHOWING PROPERTY OF

H4 GEORGETOWN PHASE 1, LLC

PROJECT: S LAKE WTP TO SF INTERCEPTOR
WILLIAMSON COUNTY

INLAND GEODETICS
Land Surveyors
1504 CHISHOLM TRAIL RD., #103
ROUND ROCK, TX 78681
512-238-1200
FIRM REG. NO. 100591-00

SHEET 3 OF 4

CDMS-003 4/23/2024

BSM P:\PROJECTS\CDM SMITH (CDMS)\CDMS-003 - S. LAKE WTP TO SF INTERCEPTOR WW SYST EXPANSION\4-DRAWINGS\ESMT\CDMS-003-ESMT-H4 GEORGETOWN PHASE 1 LLC.DWG

EXHIBIT _____

LEGEND

●	IRON ROD FOUND 1/2" IN DIAMETER OR OTHERWISE NOTED
◉	IRON ROD FOUND W/CAP 1/2" IN DIAMETER OR OTHERWISE NOTED
△	CALCULATED POINT
—X—	WIRE FENCE
—⌣—	SILT FENCE
Ⓦ	WASTEWATER MANHOLE
POB	POINT OF BEGINNING
ESMT	EASEMENT
R.O.W.	RIGHT OF WAY
OPR	OFFICIAL PUBLIC RECORDS OF WILLIAMSON COUNTY, TEXAS
PR	PLAT RECORDS OF WILLIAMSON COUNTY, TEXAS
DR	DEED RECORDS OF WILLIAMSON COUNTY, TEXAS

NOTES:

1. BEARINGS ARE BASED ON THE TEXAS COORDINATE SYSTEM OF 1983, CENTRAL ZONE, NAD83 (2011). ALL DISTANCES SHOWN HEREON ARE SURFACE VALUES REPRESENTED IN U.S. SURVEY FEET BASED ON A SURFACE-TO-GRID COMBINED ADJUSTMENT FACTOR OF 0.9998673234.
2. THIS SURVEY WAS MADE WITHOUT THE BENEFIT OF AN ABSTRACT OF TITLE NOR A TITLE COMMITMENT OR TITLE POLICY. THERE MAY BE ADDITIONAL EASEMENTS OR RESTRICTIONS, NOT SHOWN HEREON, WHICH MAY AFFECT THE PROPERTY.
3. REFERENCE IS HEREON MADE TO THE METES AND BOUNDS DESCRIPTION OF THIS TRACT ACCOMPANYING THIS SKETCH.
4. THE SUBJECT TRACT SHOWN HEREON IS AN EASEMENT, MONUMENTS WERE NOT SET FOR CORNERS.

THIS IS TO CERTIFY THAT THIS SURVEY WAS MADE ON THE GROUND IN MARCH, 2024, BY ME OR UNDER MY SUPERVISION, THAT THIS SURVEY PLAT REPRESENTS THE FACTS FOUND AT THE TIME OF THE SURVEY.

INLAND GEODETICS

MIGUEL A. ESCOBAR, L.S.L.S., R.P.L.S.
TEXAS REG. NO. 5630

STATE OF TEXAS
REGISTERED
MIGUEL ANGEL ESCOBAR
5630
PROFESSIONAL
LAND SURVEYOR

SKETCH TO ACCOMPANY DESCRIPTION OF EASEMENT

SHOWING PROPERTY OF

H4 GEORGETOWN PHASE 1, LLC

PROJECT: S LAKE WTP TO SF INTERCEPTOR
WILLIAMSON COUNTY

INLAND GEODETICS
Land Surveyors
1504 CHISHOLM TRAIL RD., #103
ROUND ROCK, TX 78681
512-238-1200
FIRM REG. NO. 100591-00

SHEET 4 OF 4

CDMS-003 4/23/2024

BSM P:\PROJECTS\CDM SMITH (CDMS)\CDMS-003 - S. LAKE WTP TO SF INTERCEPTOR WW SYST EXPANSION\4-DRAWINGS\ESMT\CDMS-003-ESMT-H4 GEORGETOWN PHASE 1 LLC.DWG

Application Fee Form

Texas Commission on Environmental Quality

Name of Proposed Regulated Entity: South Lake to South Fork Wastewater Improvements

Regulated Entity Location: The interceptor starts along the South Fork San Gabriel River then goes along the South West Bypass crossing State Highway 29 towards D B Wood Rd. The interceptors runs west of D B Wood Rd along Cedar Break Rd where it ends at the South Lake WTP.

Name of Customer: City of Georgetown

Contact Person: Chris Pousson Phone: (512) 930 - 8162

Customer Reference Number (if issued):CN 600412043

Regulated Entity Reference Number (if issued):RN _____

Austin Regional Office (3373)

☐ Hays ☐ Travis ☒ Williamson

San Antonio Regional Office (3362)

☐ Bexar ☐ Medina ☐ Uvalde

☐ Comal ☐ Kinney

Application fees must be paid by check, certified check, or money order, payable to the **Texas Commission on Environmental Quality**. Your canceled check will serve as your receipt. **This form must be submitted with your fee payment**. This payment is being submitted to:

☒ Austin Regional Office

☐ Mailed to: TCEQ - Cashier
Revenues Section
Mail Code 214
P.O. Box 13088
Austin, TX 78711-3088

☐ San Antonio Regional Office

☐ Overnight Delivery to: TCEQ - Cashier
12100 Park 35 Circle
Building A, 3rd Floor
Austin, TX 78753
(512)239-0357

Site Location (Check All That Apply):

☒ Recharge Zone ☐ Contributing Zone ☐ Transition Zone

Type of Plan	*Size*	*Fee Due*
Water Pollution Abatement Plan, Contributing Zone Plan: One Single Family Residential Dwelling	Acres	$
Water Pollution Abatement Plan, Contributing Zone Plan: Multiple Single Family Residential and Parks	Acres	$
Water Pollution Abatement Plan, Contributing Zone Plan: Non-residential	Acres	$
Sewage Collection System	25,969 L.F.	$ 6,500
Lift Stations without sewer lines	Acres	$
Underground or Aboveground Storage Tank Facility	Tanks	$
Piping System(s)(only)	Each	$
Exception	Each	$

Type of Plan	Size	Fee Due
Extension of Time	Each	$

Signature: _____ Date: 06/13/24

Application Fee Schedule

Texas Commission on Environmental Quality

Edwards Aquifer Protection Program 30 TAC Chapter 213 (effective 05/01/2008)

Water Pollution Abatement Plans and Modifications

Contributing Zone Plans and Modifications

Project	Project Area in Acres	Fee
One Single Family Residential Dwelling	< 5	$650
Multiple Single Family Residential and Parks	< 5 5 < 10 10 < 40 40 < 100 100 < 500 ≥ 500	$1,500 $3,000 $4,000 $6,500 $8,000 $10,000
Non-residential (Commercial, industrial, institutional, multi-family residential, schools, and other sites where regulated activities will occur)	< 1 1 < 5 5 < 10 10 < 40 40 < 100 ≥ 100	$3,000 $4,000 $5,000 $6,500 $8,000 $10,000

Organized Sewage Collection Systems and Modifications

Project	Cost per Linear Foot	Minimum Fee-Maximum Fee
Sewage Collection Systems	$0.50	$650 - $6,500

Underground and Aboveground Storage Tank System Facility Plans and Modifications

Project	Cost per Tank or Piping System	Minimum Fee-Maximum Fee
Underground and Aboveground Storage Tank Facility	$650	$650 - $6,500

Exception Requests

Project	Fee
Exception Request	$500

Extension of Time Requests

Project	***Fee***
Extension of Time Request	$150

TCEQ Core Data Form

South Lake to South Fork Wastewater Improvements
Georgetown, TX

TCEQ Use Only

TCEQ Core Data Form

For detailed instructions on completing this form, please read the Core Data Form Instructions or call 512-239-5175.

SECTION I: General Information

1. Reason for Submission (*If other is checked please describe in space provided.*)		
☒ New Permit, Registration or Authorization (*Core Data Form should be submitted with the program application.*)		
☐ Renewal (*Core Data Form should be submitted with the renewal form*)		☐ Other
2. Customer Reference Number (*if issued*)	Follow this link to search for CN or RN numbers in Central Registry**	**3. Regulated Entity Reference Number** (*if issued*)
CN 600412043		**RN**

SECTION II: Customer Information

4. General Customer Information	**5. Effective Date for Customer Information Updates** (mm/dd/yyyy)	6/7/2024
☐ New Customer ☒ Update to Customer Information ☐ Change in Regulated Entity Ownership ☐ Change in Legal Name (Verifiable with the Texas Secretary of State or Texas Comptroller of Public Accounts)		
The Customer Name submitted here may be updated automatically based on what is current and active with the Texas Secretary of State (SOS) or Texas Comptroller of Public Accounts (CPA).		
6. Customer Legal Name (*If an individual, print last name first: eg: Doe, John*)	*If new Customer, enter previous Customer below:*	
City of Georgetown		

7. TX SOS/CPA Filing Number	**8. TX State Tax ID** (11 digits)	**9. Federal Tax ID** (9 digits) 74-6000974	**10. DUNS Number** (*if applicable*) 89592372

11. Type of Customer:	☐ Corporation	☐ Individual	Partnership: ☐ General ☐ Limited
Government: ☒ City ☐ County ☐ Federal ☐ Local ☐ State ☐ Other		☐ Sole Proprietorship	☐ Other:

12. Number of Employees	**13. Independently Owned and Operated?**
☐ 0-20 ☐ 21-100 ☐ 101-250 ☐ 251-500 ☒ 501 and higher	☒ **Yes** ☐ **No**

14. Customer Role (Proposed or Actual) – *as it relates to the Regulated Entity listed on this form. Please check one of the following*

☒ Owner ☐ Operator ☐ Owner & Operator ☐ Other:
☐ Occupational Licensee ☐ Responsible Party ☐ VCP/BSA Applicant

15. Mailing Address:	300-1 Industrial Ave							
	City	Georgetown	**State**	TX	**ZIP**	78626	**ZIP + 4**	8445

16. Country Mailing Information (*if outside USA*)	**17. E-Mail Address** (*if applicable*)

18. Telephone Number	**19. Extension or Code**	**20. Fax Number** (*if applicable*)

(512) 930-3555		(512) 930-3559

SECTION III: Regulated Entity Information

21. General Regulated Entity Information *(If 'New Regulated Entity" is selected, a new permit application is also required.)*

☒ New Regulated Entity ☐ Update to Regulated Entity Name ☐ Update to Regulated Entity Information

The Regulated Entity Name submitted may be updated, in order to meet TCEQ Core Data Standards (removal of organizational endings such as Inc, LP, or LLC).

22. Regulated Entity Name *(Enter name of the site where the regulated action is taking place.)*

South Lake to South Fork Wastewater Interceptor Improvements

23. Street Address of the Regulated Entity: ***(No PO Boxes)***								
	City		**State**		**ZIP**		**ZIP + 4**	
24. County								

If no Street Address is provided, fields 25-28 are required.

25. Description to Physical Location:	The interceptor starts along the South Fork San Gabriel River then goes along the South West Bypass crossing State Highway 29 towards D B Wood Rd. The interceptors runs west of D B Wood Rd along Cedar Break Rd where it ends at the South Lake WTP.

26. Nearest City	**State**	**Nearest ZIP Code**
Georgetown	TX	78626

Latitude/Longitude are required and may be added/updated to meet TCEQ Core Data Standards. (Geocoding of the Physical Address may be used to supply coordinates where none have been provided or to gain accuracy).

27. Latitude (N) In Decimal:		Start - 30.619902898234958 End - 30.667033257597716	**28. Longitude (W) In Decimal:**		Start - 97.72655630561829 End - -97.739924851867676
Degrees	Minutes	Seconds	Degrees	Minutes	Seconds

29. Primary SIC Code (4 digits)	**30. Secondary SIC Code** (4 digits)	**31. Primary NAICS Code** (5 or 6 digits)	**32. Secondary NAICS Code** (5 or 6 digits)
4952		221320	

33. What is the Primary Business of this entity? *(Do not repeat the SIC or NAICS description.)*

Municipal Wasteater Collection System

34. Mailing Address:	**300-1 Industrial Ave**							
	City	**Georgetown**	**State**	**TX**	**ZIP**	**78626**	**ZIP + 4**	**8446**

35. E-Mail Address:	**chris.pousson@georgetown.org**

36. Telephone Number	**37. Extension or Code**	**38. Fax Number** *(if applicable)*
(512) 930-8162		**( ) -**

39. TCEQ Programs and ID Numbers Check all Programs and write in the permits/registration numbers that will be affected by the updates submitted on this form. See the Core Data Form instructions for additional guidance.

☐ Dam Safety	☐ Districts	☒ Edwards Aquifer	☐ Emissions Inventory Air	☐ Industrial Hazardous Waste
☐ Municipal Solid Waste	☐ New Source Review Air	☐ OSSF	☐ Petroleum Storage Tank	☐ PWS
☐ Sludge	☐ Storm Water	☐ Title V Air	☐ Tires	☐ Used Oil
☐ Voluntary Cleanup	☒ Wastewater	☐ Wastewater Agriculture	☐ Water Rights	☐ Other:

SECTION IV: Preparer Information

40. Name:	Jenny Vu	**41. Title:**	Environmental Engineer
42. Telephone Number	**43. Ext./Code**	**44. Fax Number**	**45. E-Mail Address**
(713 **)** 423-7328		**( ) -**	vujt2@cdmsmith.com

SECTION V: Authorized Signature

46. By my signature below, I certify, to the best of my knowledge, that the information provided in this form is true and complete, and that I have signature authority to submit this form on behalf of the entity specified in Section II, Field 6 and/or as required for the updates to the ID numbers identified in field 39.

Company:	CDM Smith, Inc.	**Job Title:**	Project Manager
Name *(In Print):*	Gerald S. Furrier	**Phone:**	**(** 713 **)** 423- **7337**
Signature:		**Date:**	06/13/24

Water Pollution Abatement Plan

South Lake to South Fork Wastewater Improvements
Cedar Breaks and D B Wood Lift Station
Georgetown, TX

Texas Commission on Environmental Quality

Edwards Aquifer Application Cover Page

Our Review of Your Application

The Edwards Aquifer Program staff conducts an administrative and technical review of all applications. The turnaround time for administrative review can be up to 30 days as outlined in 30 TAC 213.4(e). Generally administrative completeness is determined during the intake meeting or within a few days of receipt. The turnaround time for technical review of an administratively complete Edwards Aquifer application is 90 days as outlined in 30 TAC 213.4(e). Please know that the review and approval time is directly impacted by the quality and completeness of the initial application that is received. In order to conduct a timely review, it is imperative that the information provided in an Edwards Aquifer application include final plans, be accurate, complete, and in compliance with 30 TAC 213.

Administrative Review

1. Edwards Aquifer applications must be deemed administratively complete before a technical review can begin. To be considered administratively complete, the application must contain completed forms and attachments, provide the requested information, and meet all the site plan requirements. The submitted application and plan sheets should be final plans. Please submit one full-size set of plan sheets with the original application, and half-size sets with the additional copies.

   To ensure that all applicable documents are included in the application, the program has developed tools to guide you and web pages to provide all forms, checklists, and guidance. Please visit the below website for assistance: http://www.tceq.texas.gov/field/eapp.

2. This Edwards Aquifer Application Cover Page form (certified by the applicant or agent) must be included in the application and brought to the administrative review meeting.

3. Administrative reviews are scheduled with program staff who will conduct the review. Applicants or their authorized agent should call the appropriate regional office, according to the county in which the project is located, to schedule a review. The average meeting time is one hour.

4. In the meeting, the application is examined for administrative completeness. Deficiencies will be noted by staff and emailed or faxed to the applicant and authorized agent at the end of the meeting, or shortly after. Administrative deficiencies will cause the application to be deemed incomplete and returned.

   An appointment should be made to resubmit the application. The application is re-examined to ensure all deficiencies are resolved. The application will only be deemed administratively complete when all administrative deficiencies are addressed.

5. If an application is received by mail, courier service, or otherwise submitted without a review meeting, the administrative review will be conducted within 30 days. The applicant and agent will be contacted with the results of the administrative review. If the application is found to be administratively incomplete, it can be retrieved from the regional office or returned by regular mail. If returned by mail, the regional office may require arrangements for return shipping.

6. If the geologic assessment was completed before October 1, 2004 and the site contains "possibly sensitive" features, the assessment must be updated in accordance with the *Instructions to Geologists* (TCEQ-0585 Instructions).

Technical Review

1. When an application is deemed administratively complete, the technical review period begins. The regional office will distribute copies of the application to the identified affected city, county, and groundwater conservation district whose jurisdiction includes the subject site. These entities and the public have 30 days to provide comments on the application to the regional office. All comments received are reviewed by TCEQ.

2. A site assessment is usually conducted as part of the technical review, to evaluate the geologic assessment and observe existing site conditions. The site must be accessible to our staff. The site boundaries should be

clearly marked, features identified in the geologic assessment should be flagged, roadways marked and the alignment of the Sewage Collection System and manholes should be staked at the time the application is submitted. If the site is not marked the application may be returned.

3. We evaluate the application for technical completeness and contact the applicant and agent via Notice of Deficiency (NOD) to request additional information and identify technical deficiencies. There are two deficiency response periods available to the applicant. There are 14 days to resolve deficiencies noted in the first NOD. If a second NOD is issued, there is an additional 14 days to resolve deficiencies. If the response to the second notice is not received, is incomplete or inadequate, or provides new information that is incomplete or inadequate, the application must be withdrawn or will be denied. Please note that because the technical review is underway, whether the application is withdrawn or denied **the application fee will be forfeited**.

4. The program has 90 calendar days to complete the technical review of the application. If the application is technically adequate, such that it complies with the Edwards Aquifer rules, and is protective of the Edwards Aquifer during and after construction, an approval letter will be issued. Construction or other regulated activity may not begin until an approval is issued.

Mid-Review Modifications

It is important to have final site plans prior to beginning the permitting process with TCEQ to avoid delays.

Occasionally, circumstances arise where you may have significant design and/or site plan changes after your Edwards Aquifer application has been deemed administratively complete by TCEQ. This is considered a "Mid-Review Modification". Mid-Review Modifications may require redistribution of an application that includes the proposed modifications for public comment.

If you are proposing a Mid-Review Modification, two options are available:

- If the technical review has begun your application can be denied/withdrawn, your fees will be forfeited, and the plan will have to be resubmitted.
- TCEQ can continue the technical review of the application as it was submitted, and a modification application can be submitted at a later time.

If the application is denied/withdrawn, the resubmitted application will be subject to the administrative and technical review processes and will be treated as a new application. The application will be redistributed to the affected jurisdictions.

Please contact the regional office if you have questions. If your project is located in Williamson, Travis, or Hays County, contact TCEQ's Austin Regional Office at 512-339-2929. If your project is in Comal, Bexar, Medina, Uvalde, or Kinney County, contact TCEQ's San Antonio Regional Office at 210-490-3096

Please fill out all required fields below and submit with your application.

1. Regulated Entity Name: South Lake to South Fork Wastewater Improvements						**2. Regulated Entity No.:**			
3. Customer Name: City of Georgetown						**4. Customer No.: 600412043**			
5. Project Type: **(Please circle/check one)**	New		Modification			Extension		Exception	
6. Plan Type: **(Please circle/check one)**	WPAP	CZP	SCS	UST	AST	EXP	EXT	Technical Clarification	Optional Enhanced Measures
7. Land Use: **(Please circle/check one)**	Residential		Non-residential				**8. Site (acres):**		Cedar Breaks – 0.52 D B Wood – 1.68
9. Application Fee:	$4,000		**10. Permanent BMP(s):**					Vegetated Filter Strips, Mulch Sock, Silt Fence, and Rock Berm	
11. SCS (Linear Ft.):			**12. AST/UST (No. Tanks):**						
13. County:	Williamson		**14. Watershed:**					San Gabriel River	

Application Distribution

Instructions: Use the table below to determine the number of applications required. One original and one copy of the application, plus additional copies (as needed) for each affected incorporated city, county, and groundwater conservation district are required. Linear projects or large projects, which cross into multiple jurisdictions, can require additional copies. Refer to the "Texas Groundwater Conservation Districts within the EAPP Boundaries" map found at:

http://www.tceq.texas.gov/assets/public/compliance/field_ops/eapp/EAPP%20GWCD%20map.pdf

For more detailed boundaries, please contact the conservation district directly.

Austin Region			
County:	**Hays**	**Travis**	**Williamson**
Original (1 req.)	__	__	_1_
Region (1 req.)	__	__	_1_
County(ies)	__	__	_1_
Groundwater Conservation District(s)	__Edwards Aquifer Authority __Barton Springs/ Edwards Aquifer __Hays Trinity __Plum Creek	__Barton Springs/ Edwards Aquifer	NA
City(ies) Jurisdiction	__Austin __Buda __Dripping Springs __Kyle __Mountain City __San Marcos __Wimberley __Woodcreek	__Austin __Bee Cave __Pflugerville __Rollingwood __Round Rock __Sunset Valley __West Lake Hills	__Austin __Cedar Park __Florence _1_Georgetown __Jerrell __Leander __Liberty Hill __Pflugerville __Round Rock

San Antonio Region					
County:	**Bexar**	**Comal**	**Kinney**	**Medina**	**Uvalde**
Original (1 req.)	__	__	__	__	__
Region (1 req.)	__	__	__	__	__
County(ies)	__	__	__	__	__
Groundwater Conservation District(s)	__ Edwards Aquifer Authority __Trinity-Glen Rose	__Edwards Aquifer Authority	__Kinney	__EAA __Medina	__EAA __Uvalde
City(ies) Jurisdiction	__Castle Hills __Fair Oaks Ranch __Helotes __Hill Country Village __Hollywood Park __San Antonio (SAWS) __Shavano Park	__Bulverde __Fair Oaks Ranch __Garden Ridge __New Braunfels __Schertz	NA	__San Antonio ETJ (SAWS)	NA

I certify that to the best of my knowledge, that the application is complete and accurate. This application is hereby submitted to TCEQ for administrative review and technical review. Gerald S. Furrier, PE, PMP, BCEE
Print Name of Customer/Authorized Agent
06/13/24
Signature of Customer/Authorized Agent Date

FOR TCEQ INTERNAL USE ONLY			
Date(s)Reviewed:		Date Administratively Complete:	
Received From:		Correct Number of Copies:	
Received By:		Distribution Date:	
EAPP File Number:		Complex:	
Admin. Review(s) (No.):		No. AR Rounds:	
Delinquent Fees (Y/N):		Review Time Spent:	
Lat./Long. Verified:		SOS Customer Verification:	
Agent Authorization Complete/Notarized (Y/N):		Fee Check:	Payable to TCEQ (Y/N):
Core Data Form Complete (Y/N):			Signed (Y/N):
Core Data Form Incomplete Nos.:			Less than 90 days old (Y/N):

General Information Form

Texas Commission on Environmental Quality

For Regulated Activities on the Edwards Aquifer Recharge and Transition Zones and Relating to 30 TAC §213.4(b) & §213.5(b)(2)(A), (B) Effective June 1, 1999

To ensure that the application is administratively complete, confirm that all fields in the form are complete, verify that all requested information is provided, consistently reference the same site and contact person in all forms in the application, and ensure forms are signed by the appropriate party.

Note: Including all the information requested in the form and attachments contributes to more streamlined technical reviews.

Signature

To the best of my knowledge, the responses to this form accurately reflect all information requested concerning the proposed regulated activities and methods to protect the Edwards Aquifer. This **General Information Form** is hereby submitted for TCEQ review. The application was prepared by:

Print Name of Customer/Agent: Gerald S. Furrier

Date: 06/13/24

Signature of Customer/Agent:

Project Information

1. Regulated Entity Name: South Lake to South Fork Wastewater Improvements
2. County: Williamson
3. Stream Basin: San Gabriel River
4. Groundwater Conservation District (If applicable): N/A
5. Edwards Aquifer Zone:

   ☒ Recharge Zone
   ☐ Transition Zone

6. Plan Type:

   ☒ WPAP
   ☐ SCS
   ☐ Modification
   ☐ AST
   ☐ UST
   ☐ Exception Request

7. Customer (Applicant):

Contact Person: Chris Pousson
Entity: City of Georgetown
Mailing Address: 300-1 Industrial Ave
City, State: Georgetown, Texas Zip: 78626
Telephone: (512) 930-8162 FAX: (512) 930-3559
Email Address: chris.pousson@georgetown.org

8. Agent/Representative (If any):

Contact Person: Gerald S. Furrier
Entity: CDM Smith, Inc.
Mailing Address: 8310-1 N Capital of Texas Hwy, Suite 250
City, State: Austin, TX Zip: 78731
Telephone: (713)423-7337 FAX: _____
Email Address: furrierg@cdmsmith.com

9. Project Location:

☐ The project site is located inside the city limits of _____.
☒ The project site is located outside the city limits but inside the ETJ (extra-territorial jurisdiction) of Georgetown, TX.
☐ The project site is not located within any city's limits or ETJ.

10. ☒ The location of the project site is described below. The description provides sufficient detail and clarity so that the TCEQ's Regional staff can easily locate the project and site boundaries for a field investigation.

The Cedar Break Lift Station is approximately 2,200 ft west of intersection of Cedar Breaks Road and D B Wood Road. D B Wood Lift Station is approximately 1,650 ft south of the intersection of D B Wood Road and Oak Ridge Road.

11. ☒ **Attachment A – Road Map**. A road map showing directions to and the location of the project site is attached. The project location and site boundaries are clearly shown on the map.

12. ☒ **Attachment B - USGS / Edwards Recharge Zone Map**. A copy of the official 7 ½ minute USGS Quadrangle Map (Scale: 1" = 2000') of the Edwards Recharge Zone is attached. The map(s) clearly show:

☒ Project site boundaries.
☒ USGS Quadrangle Name(s).
☒ Boundaries of the Recharge Zone (and Transition Zone, if applicable).
☒ Drainage path from the project site to the boundary of the Recharge Zone.

13. ☒ **The TCEQ must be able to inspect the project site or the application will be returned**. Sufficient survey staking is provided on the project to allow TCEQ regional staff to locate the boundaries and alignment of the regulated activities and the geologic or manmade features noted in the Geologic Assessment.

☒ Survey staking will be completed by this date: To coordinate with TCEQ

14. ☒ **Attachment C – Project Description**. Attached at the end of this form is a detailed narrative description of the proposed project. The project description is consistent throughout the application and contains, at a minimum, the following details:

    ☒ Area of the site
    ☒ Offsite areas
    ☒ Impervious cover
    ☒ Permanent BMP(s)
    ☒ Proposed site use
    ☒ Site history
    ☒ Previous development
    ☒ Area(s) to be demolished

15. Existing project site conditions are noted below:

    ☐ Existing commercial site
    ☐ Existing industrial site
    ☐ Existing residential site
    ☐ Existing paved and/or unpaved roads
    ☐ Undeveloped (Cleared)
    ☒ Undeveloped (Undisturbed/Uncleared)
    ☐ Other: _____

Prohibited Activities

16. ☒ I am aware that the following activities are prohibited on the Recharge Zone and are not proposed for this project:

    (1) Waste disposal wells regulated under 30 TAC Chapter 331 of this title (relating to Underground Injection Control);

    (2) New feedlot/concentrated animal feeding operations, as defined in 30 TAC §213.3;

    (3) Land disposal of Class I wastes, as defined in 30 TAC §335.1;

    (4) The use of sewage holding tanks as parts of organized collection systems; and

    (5) New municipal solid waste landfill facilities required to meet and comply with Type I standards which are defined in §330.41(b), (c), and (d) of this title (relating to Types of Municipal Solid Waste Facilities).

    (6) New municipal and industrial wastewater discharges into or adjacent to water in the state that would create additional pollutant loading.

17. ☒ I am aware that the following activities are prohibited on the Transition Zone and are not proposed for this project:

    (1) Waste disposal wells regulated under 30 TAC Chapter 331 (relating to Underground Injection Control);

(2) Land disposal of Class I wastes, as defined in 30 TAC §335.1; and

(3) New municipal solid waste landfill facilities required to meet and comply with Type I standards which are defined in §330.41 (b), (c), and (d) of this title.

Administrative Information

18. The fee for the plan(s) is based on:

- ☒ For a Water Pollution Abatement Plan or Modification, the total acreage of the site where regulated activities will occur.
- ☐ For an Organized Sewage Collection System Plan or Modification, the total linear footage of all collection system lines.
- ☐ For a UST Facility Plan or Modification or an AST Facility Plan or Modification, the total number of tanks or piping systems.
- ☐ A request for an exception to any substantive portion of the regulations related to the protection of water quality.
- ☐ A request for an extension to a previously approved plan.

19. ☒ Application fees are due and payable at the time the application is filed. If the correct fee is not submitted, the TCEQ is not required to consider the application until the correct fee is submitted. Both the fee and the Edwards Aquifer Fee Form have been sent to the Commission's:

- ☐ TCEQ cashier
- ☒ Austin Regional Office (for projects in Hays, Travis, and Williamson Counties)
- ☐ San Antonio Regional Office (for projects in Bexar, Comal, Kinney, Medina, and Uvalde Counties)

20. ☒ Submit one (1) original and one (1) copy of the application, plus additional copies as needed for each affected incorporated city, groundwater conservation district, and county in which the project will be located. The TCEQ will distribute the additional copies to these jurisdictions. The copies must be submitted to the appropriate regional office.

21. ☒ No person shall commence any regulated activity until the Edwards Aquifer Protection Plan(s) for the activity has been filed with and approved by the Executive Director.

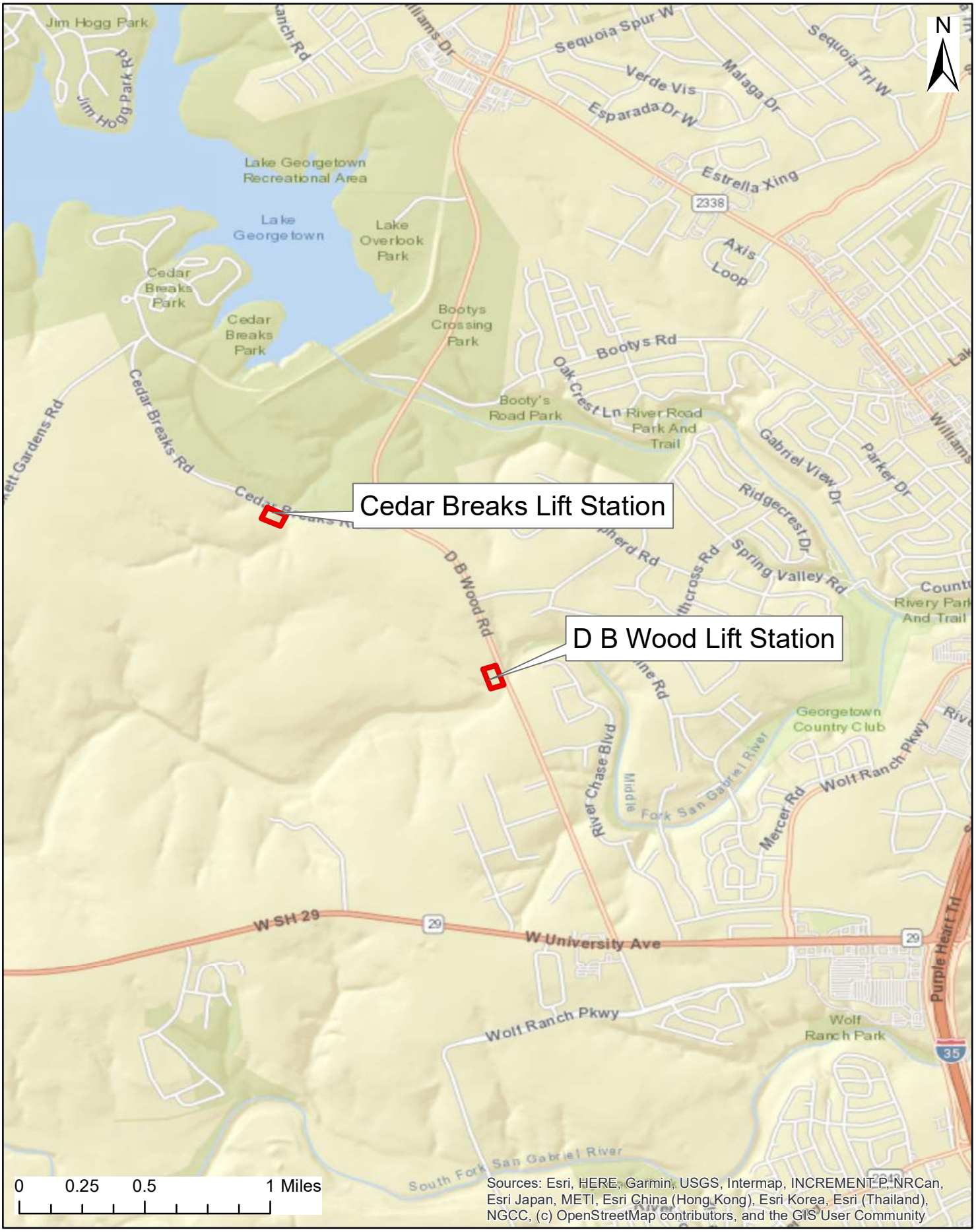

Attachment A: Road Map
South Lake to South Fork Wastewater Improvements
Williamson County, Texas

CDM Smith

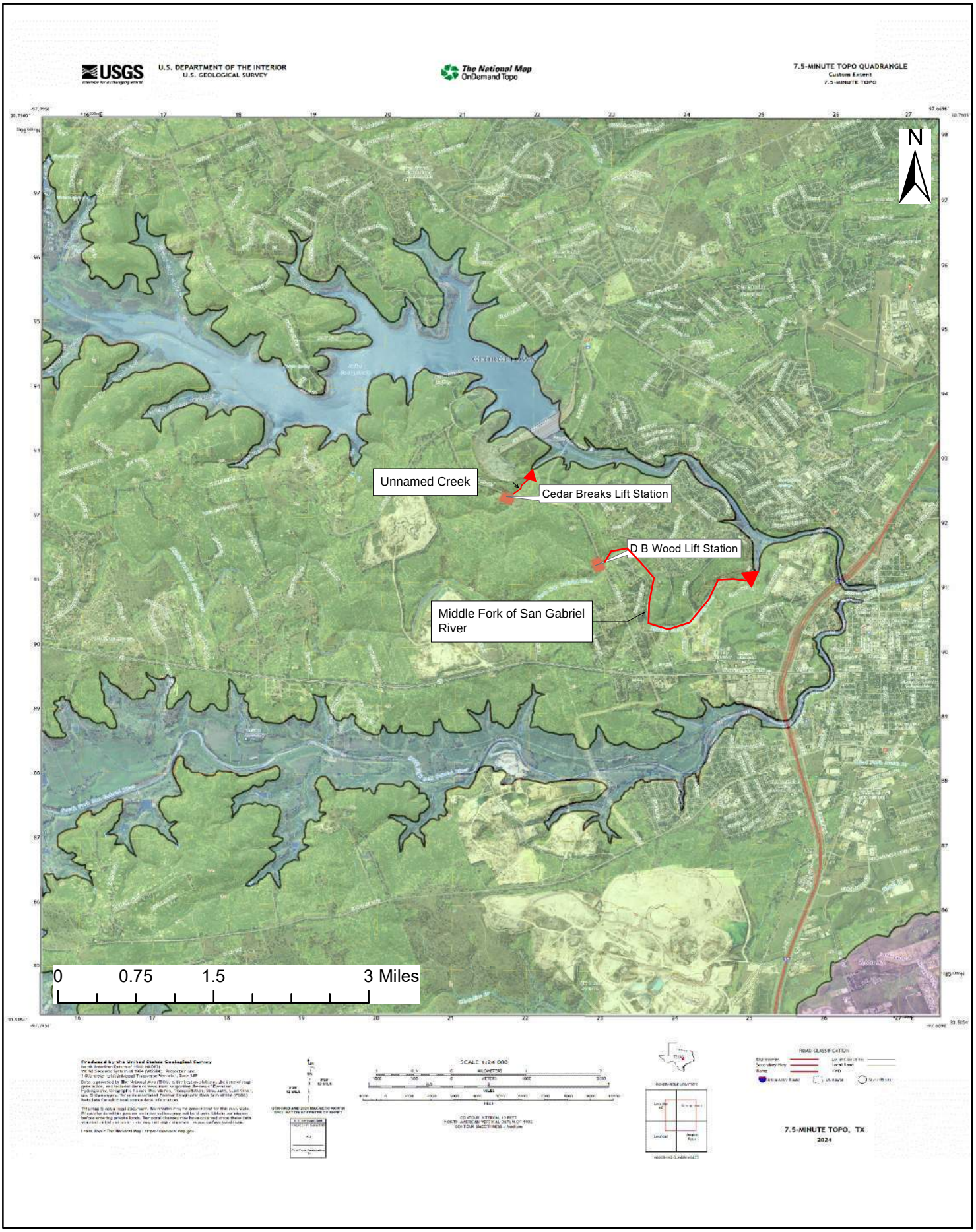

Legend

Edwards Aquifer

- Edwards Aquifer Contributing Zone
- Edwards Aquifer Recharge Zone
- Edwards Aquifer Transition Zone

Attachment B: Edwards Recharge Zone Map
South Lake to South Fork Wastewater Improvements
Williamson County, Texas

CDM Smith

City of Georgetown

South Lake to South Fork Wastewater Improvements

Water Pollution Abatement Plan

The South Lake to South Fork Wastewater Interceptor project will create two new lift stations near Cedar Breaks Road and DB Woods Road in Georgetown, Texas. The project will include two aboveground storage tanks that will contain diesel used to power the electrical generators at the lift stations. The Cedar Breaks Lift Station site is 0.52 acres. The site has previously not been developed. The impervious cover of the proposed site is 0.09 acres (17.31%). The B D Woods Lift Station site is 1.68 acres. The site has previously not been developed. The impervious cover of the proposed site is 0.30 acres (17.86%). Permanent best management practices (BMPs) for the site include vegetated filter strips that will treat over 80% of the Total Suspended Solids (TSS) that will be generated from the new impervious cover.

Geologic Assessment

Cedar Breaks and D B Wood Lift Station
Georgetown, TX

GEOLOGIC ASSESSMENT
FOR THE APPROXIMATELY 4.95-MILE
SOUTH LAKE TO SOUTH FORK
WASTEWATER IMPROVEMENTS PROJECT

Williamson County, Texas

June 2024

Submitted to:
CDM Smith, Inc.
11490 Westheimer Road
Suite 700
Houston, Texas 77077

Prepared by:
aci environmental consulting, LLC
1001 Mopac Circle
Austin, Texas 78746
TBPG Firm License No. 50713

aci project #: 36-21-200

Geologic Assessment

Texas Commission on Environmental Quality

For Regulated Activities on The Edwards Aquifer Recharge/transition Zones and Relating to 30 TAC §213.5(b)(3), Effective June 1, 1999

To ensure that the application is administratively complete, confirm that all fields in the form are complete, verify that all requested information is provided, consistently reference the same site and contact person in all forms in the application, and ensure forms are signed by the appropriate party.

Note: Including all the information requested in the form and attachments contributes to more streamlined technical reviews.

Signature

To the best of my knowledge, the responses to this form accurately reflect all information requested concerning the proposed regulated activities and methods to protect the Edwards Aquifer. My signature certifies that I am qualified as a geologist as defined by 30 TAC Chapter 213.

Print Name of Geologist: Mark T. Adams Telephone: (512) 347-9000

Date: 06/17/2024 Fax: (512) 306-0974

Representing: aci environmental consulting LLC TBPG License No. 50713 (Name of Company and TBPG or TBPE registration number)

Signature of Geologist:

STATE OF TEXAS
MARK T. ADAMS
GEOLOGY
No. 1835
LICENSED
PROFESSIONAL GEOSCIENTIST

Regulated Entity Name: City of Georgetown, Texas

Project Information

1. Date(s) Geologic Assessment was performed: 11/14/2022, 12/06/2022, 12/15/2022, 12/21/2022, 2/7/2023, 3/14/2023, 3/23/2023, 3/29/2023, 4/13/2023, 5/25/2023, 6/5/2023, 7/31/2023
2. Type of Project:

   ☒ WPAP ☒ AST
   ☒ SCS ☐ UST
3. Location of Project:

   ☒ Recharge Zone
   ☐ Transition Zone

☐ Contributing Zone within the Transition Zone

4. ☒ **Attachment A - Geologic Assessment Table**. Completed Geologic Assessment Table (Form TCEQ-0585-Table) is attached.

5. ☒ Soil cover on the project site is summarized in the table below and uses the SCS Hydrologic Soil Groups* (Urban Hydrology for Small Watersheds, Technical Release No. 55, Appendix A, Soil Conservation Service, 1986). If there is more than one soil type on the project site, show each soil type on the site Geologic Map or a separate soils map.

Table 1 - Soil Units, Infiltration Characteristics and Thickness

Soil Name	Group*	Thickness(feet)
	See Section 4.0 of Report.	

** Soil Group Definitions (Abbreviated)*

A. Soils having a high infiltration rate when thoroughly wetted.
B. Soils having a moderate infiltration rate when thoroughly wetted.
C. Soils having a slow infiltration rate when thoroughly wetted.
D. Soils having a very slow infiltration rate when thoroughly wetted.

6. ☒ **Attachment B – Stratigraphic Column**. A stratigraphic column showing formations, members, and thicknesses is attached. The outcropping unit, if present, should be at the top of the stratigraphic column. Otherwise, the uppermost unit should be at the top of the stratigraphic column.

7. ☒ **Attachment C – Site Geology**. A narrative description of the site specific geology including any features identified in the Geologic Assessment Table, a discussion of the potential for fluid movement to the Edwards Aquifer, stratigraphy, structure(s), and karst characteristics is attached.

8. ☒ **Attachment D – Site Geologic Map(s)**. The Site Geologic Map must be the same scale as the applicant's Site Plan. The minimum scale is 1”: 400'

   Applicant's Site Plan Scale: 1" = 400'
   Site Geologic Map Scale: 1" = 400'
   Site Soils Map Scale (if more than 1 soil type): 1" = 2,250'

9. Method of collecting positional data:

   ☒ Global Positioning System (GPS) technology.
   ☐ Other method(s). Please describe method of data collection: _____

10. ☒ The project site and boundaries are clearly shown and labeled on the Site Geologic Map.

11. ☒ Surface geologic units are shown and labeled on the Site Geologic Map.

12. ☒ Geologic or manmade features were discovered on the project site during the field investigation. They are shown and labeled on the Site Geologic Map and are described in the attached Geologic Assessment Table.

    ☐ Geologic or manmade features were not discovered on the project site during the field investigation.

13. ☒ The Recharge Zone boundary is shown and labeled, if appropriate.

14. All known wells (test holes, water, oil, unplugged, capped and/or abandoned, etc.): If applicable, the information must agree with Item No. 20 of the WPAP Application Section.

    ☒ There are 24 (#) wells present on the project site and the locations are shown and labeled. (Check all of the following that apply.)
    - ☒ The wells are not in use and have been properly abandoned.
    - ☐ The wells are not in use and will be properly abandoned.
    - ☐ The wells are in use and comply with 16 TAC Chapter 76.

    ☐ There are no wells or test holes of any kind known to exist on the project site.

Administrative Information

15. ☒ Submit one (1) original and one (1) copy of the application, plus additional copies as needed for each affected incorporated city, groundwater conservation district, and county in which the project will be located. The TCEQ will distribute the additional copies to these jurisdictions. The copies must be submitted to the appropriate regional office.

TABLE OF CONTENTS

1.0 INTRODUCTION **1**

2.0 PROJECT INFORMATION **1**

3.0 INVESTIGATION METHODS **2**

4.0 SOILS AND GEOLOGY **3**

5.0 SUMMARY OF FINDINGS **8**

6.0 REFERENCES **10**

ATTACHMENT A 11
ATTACHMENT B 16
ATTACHMENT C 40

June 2024

Geologic Assessment for the South Lake to South Fork Wastewater Improvements Project, Williamson County, Texas

1.0 INTRODUCTION

The Texas Commission on Environmental Quality (TCEQ) regulates activities that have the potential to pollute the Edwards Aquifer through the Edwards Aquifer Protection Program. Projects meeting a certain criterion over the Edwards Aquifer Recharge Zone must submit an Edwards Aquifer Protection Plan (EAPP).

The purpose of this report is to identify all potential pathways for contaminant movement to the Edwards Aquifer and provide sufficient geologic information so that the appropriate Best Management Practices (BMPs) can be proposed in the EAPP. This report complies with the requirements of Title 30, Texas Administrative Code (TAC) Chapter 213 relating to the protection of the Edwards Aquifer Recharge Zone. Per the Rules, the Geologic Assessment must be completed by a Geologist licensed according to the Texas Geoscience Practice Act.

2.0 PROJECT INFORMATION

The South Lake to South Fork Wastewater Improvement Project consists of the installation of a gravity sewer and force mains that vary in diameter from 12 to 18 inches within a permanent easement, as well as a 50-foot construction easement throughout the majority of the alignment. Collectively, the gravity sewer, force mains, and associated temporary construction easements are referred to as the "project" and are approximately 4.95 miles in length. The South Lake to South Fork Wastewater Improvements Project is located in the City of Georgetown Full Purpose jurisdiction, Williamson County, Texas (**Attachment A, Figure 1**).

Pedestrian investigations of the approximately 4.95-mile project area were performed on numerous dates from November 2022 to April 2024 by Marcos Cardenas, Mason Finley, Andrew Marlow, GIT, Gabriel Nejad, Anna Ozelius, Kevin Ramberg, and Angelica Rapacz, under the supervision of Mark Adams, P.G. with **aci environmental consulting, LLC**. The project, including a 50-foot buffer around all easements, was surveyed.

This report is intended to satisfy the requirements for a Geologic Assessment, which shall be included as a component of a Sewage Collection System (SCS) and Water Pollution Abatement Plan (WPAP). The project is approximately 4.95 miles in total. The proposed site use is for the South Lake to South Fork Wastewater Improvements Project. The scope of the report consists of a site reconnaissance, field survey, and review of existing data and reports. Features identified during the field survey were ranked utilizing the TCEQ matrix for Edwards Aquifer Recharge Zone features. The ranking of the features will determine their viability as "sensitive" features.

3.0 INVESTIGATION METHODS

The following investigation methods and activities were used to develop this report:

- Review of existing files and literature to determine the regional geology and any known caves associated with the project area;
- Review of past geological field reports, cave studies, and correspondence regarding the existing geologic features on the project area, if available;
- Site reconnaissance by a registered professional geologist to identify and examine caves, recharge features, and other significant geological structures;
- Evaluation of collected field data and a ranking of features using the TCEQ Ranking Table 0585 for the Edwards Aquifer Recharge Zone; and
- Review of historic aerial photographs to determine if there are any structural features present, and to determine any past disturbances on the subject property.

4.0 SOILS AND GEOLOGY

The following includes a site-specific description of the soils, geologic stratigraphy, geologic structure, and karstic characteristics as they relate to the Edwards aquifer. Also included in this section is a review of historic aerials for presence of geologic changes or changes to manmade features in bedrock.

Soils

According to the United States Department of Agriculture (USDA) Natural Resource Conservation Service (NRCS) Web Soil Survey (2023), six soil units occur within the project (**Attachment A, Figure 2**):

- EaD - Eckrant cobbly clay, 1 to 8 percent slopes

The Eckrant component makes up 85 percent of the map unit. Slopes are 1 to 8 percent. This component is on ridges on dissected plateaus. The parent material consists of residuum weathered from limestone. Depth to a root restrictive layer, bedrock, lithic, is 4 to 20 inches. The natural drainage class is well drained. Water movement in the most restrictive layer is moderately low. Available water to a depth of 60 inches (or restricted depth) is very low. Shrink-swell potential is high. This soil is not flooded. It is not ponded. There is no zone of water saturation within a depth of 72 inches. Organic matter content in the surface horizon is about 6 percent. **This soil does not meet hydric criteria.** Hydrologic Soil Group: D.

Brackett (7%), Bexar (5%), and Krum (3%) components make up the remaining 15% of the map unit.

- EeB – Eckrant stony clay, 0 to 3 percent slopes, stony

The Eckrant, stony component makes up 85 percent of the map unit. Slopes are 0 to 3 percent. This component is on ridges on dissected plateaus. The parent material consists of residuum weathered from limestone. Depth to a root restrictive layer, bedrock, lithic, is 4 to 20 inches. The natural drainage class is well drained. Water movement in the most restrictive layer is moderately low. Available water to a depth of 60 inches (or restricted

depth) is very low. Shrink-swell potential is moderate. This soil is not flooded. It is not ponded. There is no zone of water saturation within a depth of 72 inches. Organic matter content in the surface horizon is about 6 percent. **This soil does not meet hydric criteria.** Hydrologic Soil Group: D.

Georgetown (8%) and Doss (7%) components make up the remaining 15% of the map unit.

- ErE—Eckrant-Rock outcrop association, 1 to 10 percent slopes

The Eckrant component makes up 58 percent of the map unit. Slopes are 1 to 10 percent. This component is found on ridges of dissected plateaus. The parent material consists of residuum weathered from limestone. Depth to a root restrictive layer, bedrock, lithic, is 4 to 20 inches. The natural drainage class is well drained. Water movement in the most restrictive layer is moderately low. Available water to a depth of 60 inches (or restricted depth) is very low. Shrink-swell potential is moderate. This soil is not flooded or ponded. There is no zone of water saturation within a depth of 72 inches. Organic matter content in the surface horizon is about 6 percent. **This soil does not meet hydric criteria.** Hydrologic Soil Group: D.

Rock outcrop (16%), Tarpley (11%), Real (6%), Brackett (5%), and Pratley (4%) components make up the remaining 42% of the map unit.

- GsB—Georgetown stony clay loam, 1 to 3 percent slopes

The Georgetown component makes up 90 percent of the map unit. Slopes are 1 to 3 percent. This component is on broad ridges on dissected plateaus. The parent material consists of clayey residuum weathered from limestone. Depth to a root restrictive layer, bedrock, lithic, is 20 to 40 inches. The natural drainage class is well drained. Water movement in the most restrictive layer is low. Available water to a depth of 60 inches (or restricted depth) is low. Shrink-swell potential is high. This soil is not flooded. It is not ponded. There is no zone of water saturation within a depth of 72 inches. Organic matter

content in the surface horizon is about 3 percent. **This soil does not meet hydric criteria.** Hydrologic Soil Group: D.

Tarpley (5%), Eckrant (3%), and Fairlie (2%) components make up the remaining 10% of the map unit.

- OlA—Oakalla soils, 0 to 1 percent slopes, channeled, frequently flooded

The Oakalla, channeled component makes up 90 percent of the map unit. Slopes are 0 to 1 percent. This component is on channeled flood plains on dissected plateaus. The parent material consists of loamy alluvium derived from limestone. Depth to a root restrictive layer is greater than 60 inches. The natural drainage class is well drained. Water movement in the most restrictive layer is moderately high. Available water to a depth of 60 inches (or restricted depth) is moderate. Shrinkswell potential is low. This soil is frequently flooded. It is not ponded. There is no zone of water saturation within a depth of 72 inches. Organic matter content in the surface horizon is about 4 percent. **This soil does not meet hydric criteria.** Hydrologic Soil Group: B.

Tarpley (5%), Eckrant (3%), and Fairlie (2%) components make up the remaining 10% of the map unit.

- SvB – Sunev silty clay loam, 1 to 3 percent slopes

The Sunev component makes up 100 percent of the map unit. Slopes are 1 to 3 percent. This component is on stream terraces on dissected plains. The parent material consists of loamy alluvium of Quaternary age derived from mixed sources. Depth to a root restrictive layer is greater than 60 inches. The natural drainage class is well drained. Water movement in the most restrictive layer is moderately high. Available water to a depth of 60 inches (or restricted depth) is moderate. Shrinkswell potential is low. This soil is not flooded. It is not ponded. There is no zone of water saturation within a depth of 72 inches. Organic matter content in the surface horizon is about 2 percent. **This soil does not meet hydric criteria**. Hydrologic Soil Group: B.

Geologic Stratigraphy

According to the *Geologic Map of the Georgetown Quadrangle, Texas*, three geologic units, Alluvium (Qal), Comanche Peak Limestone (Kc), and Edwards Limestone (Ked) occur within the project alignment (**Attachment A, Figure 3**). A description of geologic units by Collins (1997) is as follows:

- Quaternary Alluvium (Qal)

"Gravel, sand, silt, and clay along streams and rivers; inundated regularly. Gravel is mostly limestone and chert. Along minor drainages, includes undivided low terrace deposits. Includes some local bedrock outcrops that are undivided."

- Edwards Limestone (Ked)

"Limestone, dolomitic limestone and marl. Massive to thin beds, chert, and fossiliferous; fossils include rudistids. Shallow subtidal to tidal-flat cycles. Honeycomb textures, voids in collapsed breccias, and cavern systems. Accounts for most of the Edwards aquifer strata. Thickness is between 100ft to 300ft; thins northward."

- Comanche Peak Limestone (Kc)

"Limestone and marl. Nodular, fossiliferous. Lower part of Edwards aquifer strata. Thickens northward from ~40 to 70 ft."

Site-Specific Stratigraphic Column

Formation	Members	Thickness (Collins, 1997)
Quaternary Alluvium (Qal)	N/A	0-10 feet
Edwards Limestone (Ked)	N/A	100-300 feet
Comanche Peak (Kc)	N/A	40-70 feet

Geologic Structure

The geologic strata associated with the Edwards Aquifer include the Georgetown Limestone Formation of the Washita Group, the Edwards Limestone Group, which is interfingered with the Comanche Peak Formation, followed by the Walnut formation, and finally the Glen Rose Formation of the Trinity Group. These Groups dip gently to the southeast and are characterized by the Balcones Fault Escarpment, a zone of en echelon normal faults downthrown to the southeast. Locally, the dominant structural trend of faults within the area is 15°, as evidenced by the mapped fault patterns (**Attachment A, Figure 4**). Thus, all features that have a trend ranging from 0° to 30° are considered "on trend" and were awarded the additional 10 points in the Geologic Assessment Table.

The geology on the site and surrounding tracts up to the border of Lake Georgetown is all Edwards Limestone (Ked), however the Comanche Peak (Kc) is present along the border of Lake Georgetown, suggesting the site is within the lower section of the Edwards Limestone (Collins 1997).

Karstic Characteristics

In limestone landscapes, karst is expressed by erratically developed cavernous porosity from dissolution of bedrock as water combined with weak acids moves through the subsurface. Karst terrains are typical of the Edwards Limestone, occurring across a vast region of Central Texas, including the Balcones Fault Escarpment. The features produced by karst processes include, but are not limited to, sinkholes, solution cavities, solution enlarged fractures, and caves. These features can eventually provide conduits for fluid movement such as surface water runoff, as "point recharge" to the Edwards Aquifer. Faults and manmade features within bedrock can also provide conduits for point recharge in many cases.

According to Edwards Aquifer zone map produced by the TCEQ (2005), the entire project is within the northern segment of the Edwards Aquifer Recharge Zone (**Attachment A, Figure 3**). Thus, all karst features identified as sensitive within the project limits have the potential to be point recharge features into the Edwards Aquifer.

Review of Historic Aerials

Aerial photographs from 1941, 1953, 1962, 1974, 1981, 1988, 1995, 2004, 2010, 2016, and 2022 were reviewed for the site. It was determined that ranching and agricultural activities occurred on the site since before the first aerial image dated 1941 (**Attachment C**). The 1981 aerial shows the first occurrence of the North San Gabriel Dam directly east of the site. In the 1988 aerial, the Cedar Breaks Road first appears and in the 1995 aerial, homes directly south of the project are first seen. In the 2004 aerial, D B Wood Road is first seen, and in 2016, construction on a water tower appears at the intersection of D B Wood Road and Cedar Breaks Road. In the 2022 aerial, construction on the South Lake Georgetown Water Treatment Plant, directly adjacent to the northern portion of the project, first appears. There are no apparent changes to the project throughout the historic aerial collection.

5.0 SUMMARY OF FINDINGS

This report documents the findings of a geologic assessment conducted by **aci environmental consulting** personnel on numerous dates between November 2022 and April 2024. Due to various iterations of the proposed project to move the wastewater line away from sensitive features, a larger area was surveyed. As a result, the sequence of features identified does not follow a logical numerical order. Additionally, as the alignment spans a total length of 4.95 miles, Attachment B, Figure 5 is broken into a series of maps (Figures 5A through 5H), which begin at the northern terminus and follow the alignment south.

Only features within 50 feet of the final project limits are included in this report (Attachment B, Figure 5A through 5H), with the exception of feature F-43, which is included to explain the design of the alignment along Cedar Breaks Rd. More information on this feature can be found in **Attachment B**. A total of 10 features were identified within 50 feet of the limits of the project. Four of these features are manmade features in bedrock, five are naturally occurring non-sensitive features, and one is a naturally occurring sensitive feature. Comprehensive descriptions for each feature can be found in

Attachment B. The manmade features in bedrock are non-sensitive, but are classified as sensitive, as they should be brought to the attention of the project engineers.

6.0 REFERENCES

Collins, E.W., 1997. *Geologic Map of the Georgetown Quadrangle, Texas.* Bureau of Economic Geology. Austin, Texas.

(SCS) Soil Conservation Survey. 1983. Soil Survey of Williamson County, Texas. United States Department of Agriculture. Texas Agriculture Experiment Station.

(TCEQ) Texas Commission on Environmental Quality. 2004. Instructions to Geologists for Geologic Assessments on the Edwards Aquifer Recharge/Transition Zones. October 1, 2004. Austin, Texas.

(TCEQ) Texas Commission on Environmental Quality. 2005. "Edwards Aquifer Protection Program, Chapter 213 Rules - Recharge Zone, Transition Zone, Contributing Zone, and Contributing Zone within the Transition Zone." Map. Digital data. September 1, 2005. Austin, Texas.

(TWDB) Texas Water Development Board. 2023. Water Data Interactive Groundwater Data Viewer. Accessed on October 24, 2023. Available at: http://www2.twdb.texas.gov/apps/waterdatainteractive/groundwaterdataviewer

(USDA NRCS) U.S. Department of Agriculture Natural Resources Conservation Service. 2023. WebSoilSurvey.com. Soil Survey Area: Williamson County, Texas. Date accessed: October 24, 2023.

ATTACHMENT A

Project Maps

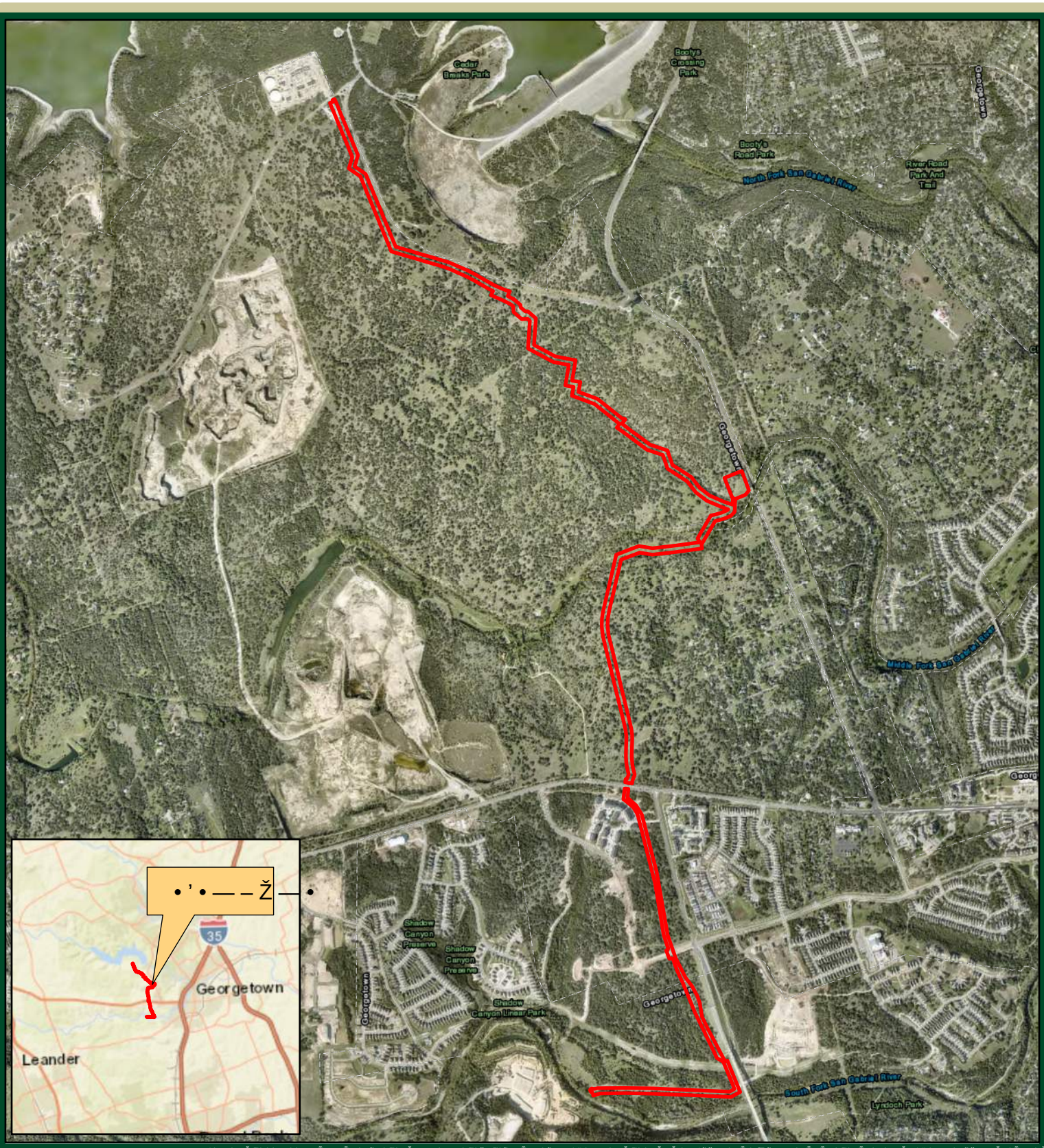

X ð X [W ð W X [V X ð X [V

Ž Ž •

1 W ñ X] ð V V V W 1 ' — Œ ' 1 ½ 1 X ð X [V 1 • Ž Ž •

› ˜ " Ž Œ • 1 • ' • — – Ž — •

aci env

˜ ž • ' 1 Š " Ž 1 • ˜ 1 ˜ ž • ' 1 ˜ › " 1 Š œ • Ž Š • Ž › 1 – ™ › ˜ Ÿ Ž – Ž — • œ Š 1 Œ ˜ 1 Ž › Œ " • Ž Œ • 1 ˜ ï ñ 1

' • ž › Ž 1 W ñ 1 • ' • — – Ž — •

ž — Ž 1 X V

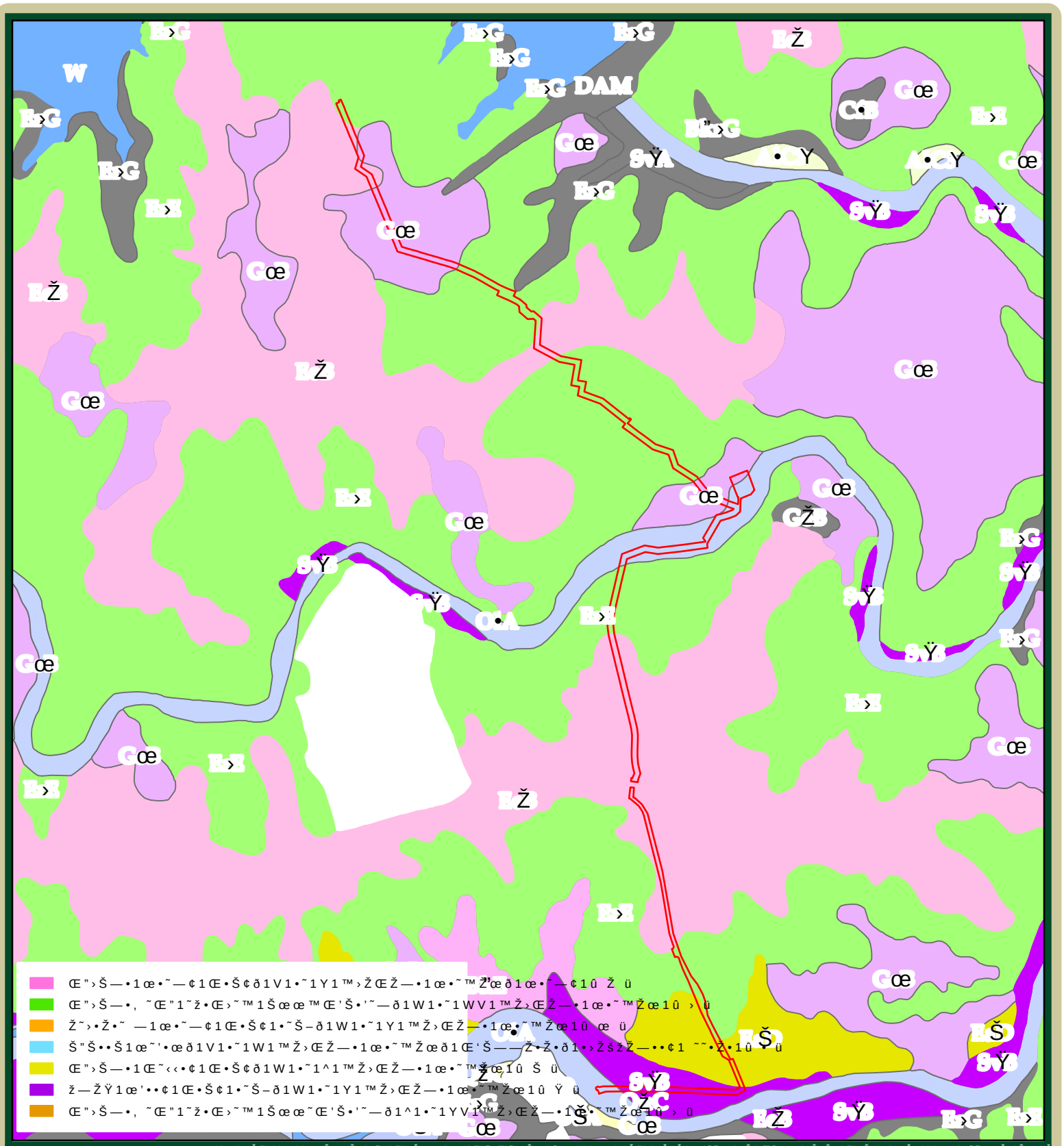
DAM

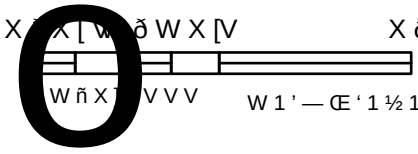

aci env

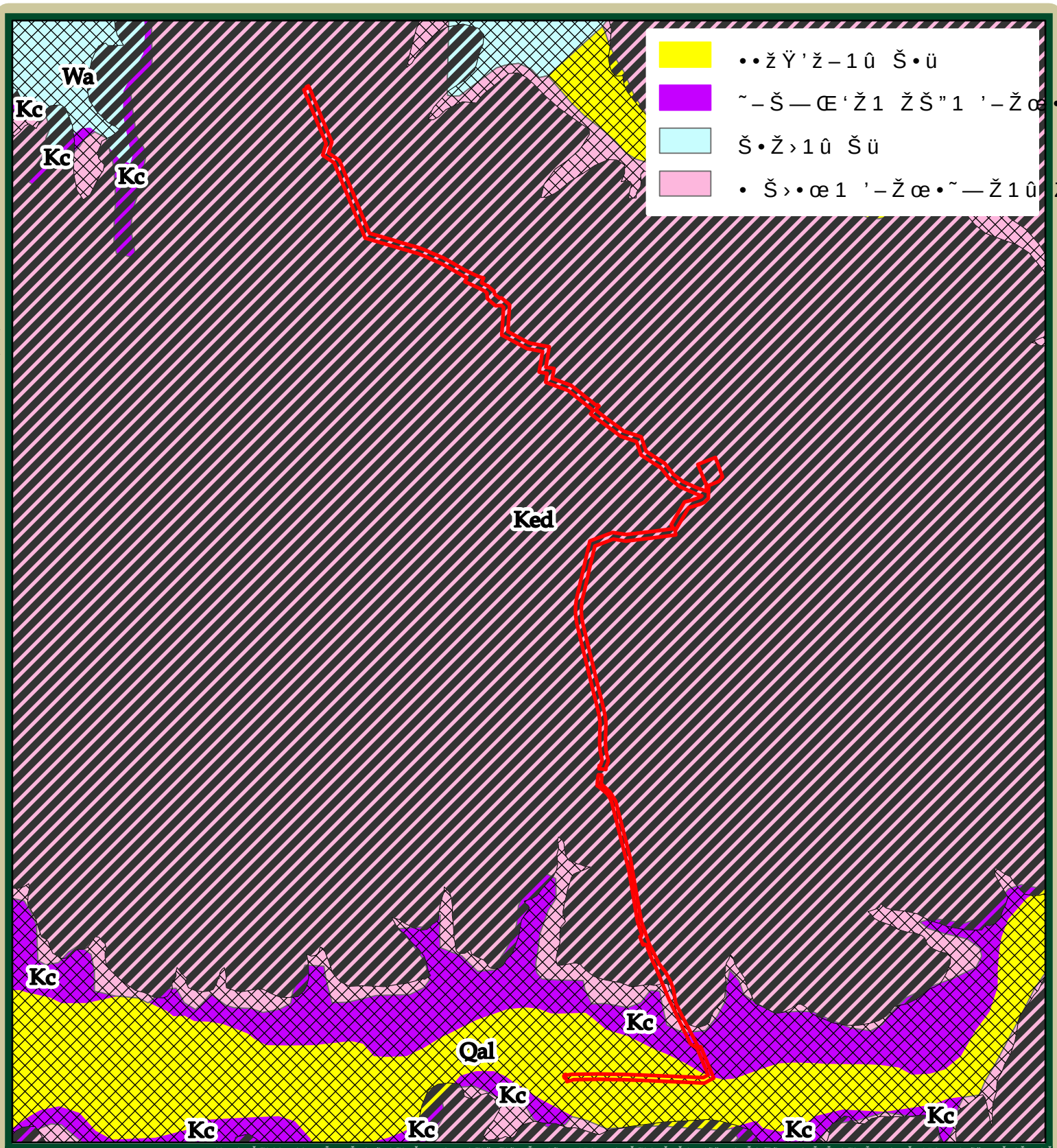
Wa
Kc
Kc
Kc
Ked
Kc
Kc
Qal
Kc
Kc
Kc
Kc

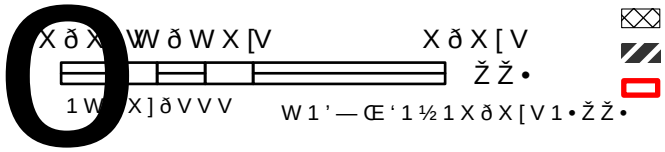

aci
env

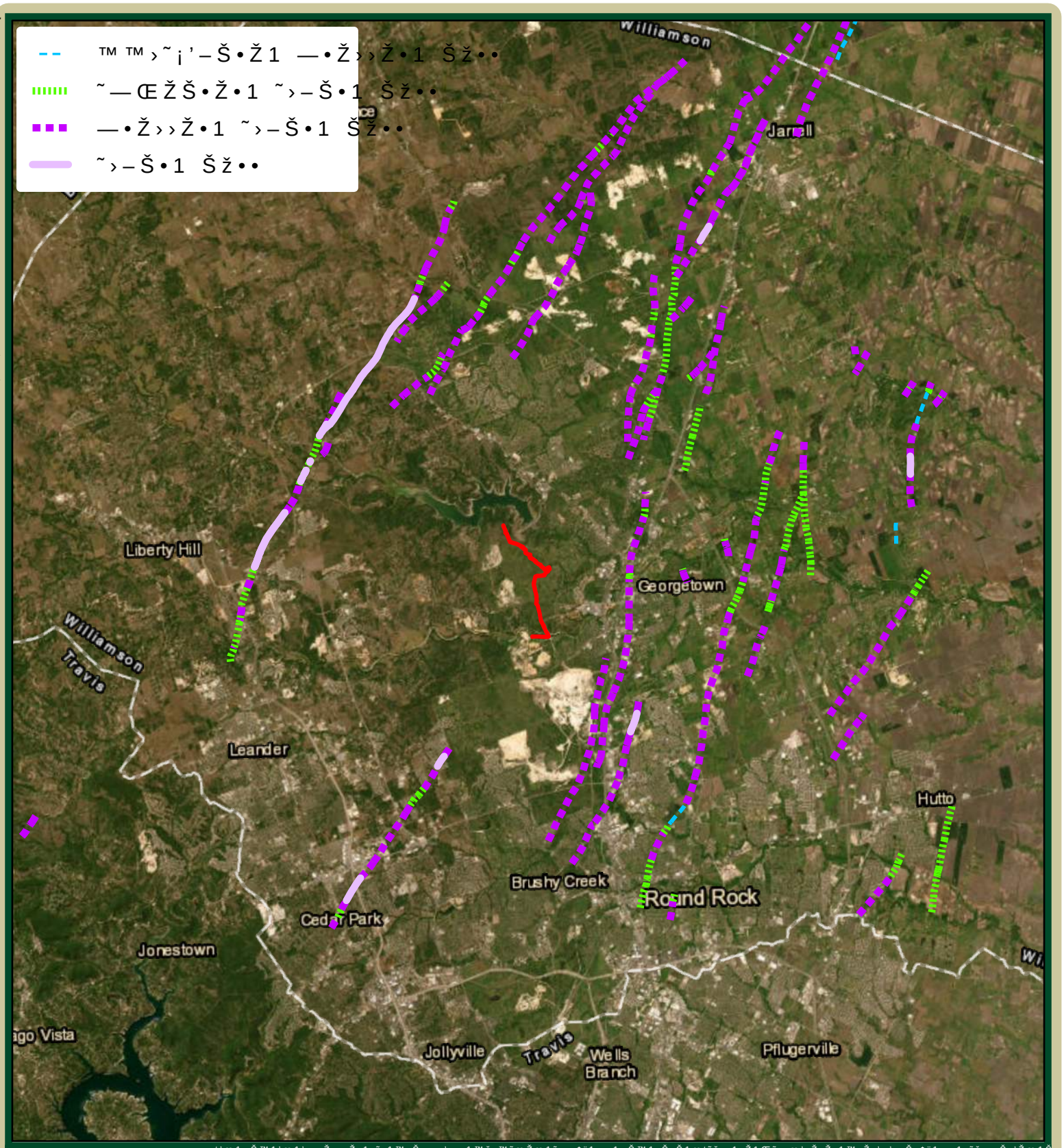

XVðVWWðVVW XVðVVV

ŽŽ•

1WñXZVðVVV W1'—Œ'1½1XVðVVV1•ŽŽ•

ŸŽ›Š•Ž1 Ž•'˜—Š•1 ›Ž—•ñ1WĮÚ

›˜"ŽŒ•1 •'•—–Ž—•

aci env

˜ž•'1 Š"Ž1•˜1 ˜ž•'1 ˜›"1 Šœ•Ž Š•Ž›1 –™›˜ŸŽ–Ž—•œŠ1Œ›˜1Ž›Œ"•ŽŒ•1 ˜ïñ1

'•ž›Ž1Zñ1 Ž•'˜—Š•1 Šž••1 ›Ž—• ž—Ž1XV

ATTACHMENT B

Geologic Table
Geologic and Manmade Feature Map (Figure 5)
Feature Descriptions and Recommendations

GEOLOGIC ASSESSMENT TABLE

PROJECT NAME: South Lake to South Fork Wastewater Improvements Project

LOCATION			FEATURE CHARACTERISTICS												EVALUATION			PHYSICAL SETTING		
1A	1B *	1C*	2A	2B	3	4			5	5A	6	7	8A	8B	9	10		11		12
FEATURE ID	LATITUDE	LONGITUDE	FEATURE TYPE	POINTS	FORMATION	DIMENSIONS (FEET)			TREND (DEGREES)	DIP	DENSITY (NO/FT)	APERTURE (FEET)	INFILL	RELATIVE INFILTRATION RATE	TOTAL	SENSITIVITY		CATCHMENT AREA (ACRES)		TOPOGRAPHY
						X	Y	Z		10						<40	>40	<1.6	>1.6	
F-06	30.655157	-97.728453	SF	20	Ked	4	1	0.5	0°	10	-	-	O	7	37	X		X		Hillside
F-18	30.652722	-97.726107	SC	20	Ked	0.5	0.5	2	-	-	-	-	C, F, V	10	30	X		X		Hillside
F-19	30.652917	-97.726267	SC	20	Ked	1	1	1	-	-	-	-	O	12	32	X		X		Hillside
F-30	30.648595	-97.717785	SC	20	Ked	3	3	1.5	-	-	-	-	C, O, V	8	28	X		X		Hillside
F-43	30.663779	-97.737627	SH	20	Ked	10	10	1	-	-	-	-	C, O, V	34	54		X	X		Hillside
MBN-02	30.65881	-97.733266	MB	30	Ked	?	?	?	-	-	-	-	?	5	35	X		X		Hillside
MBN-04	30.63446	-97.723837	MB	30	Ked	?	?	?	-	-	-	-	?	10	40		X	X		Hillside
MBS-01	30.629738	-97.722529	MB	30	Ked	?	?	?	-	-	-	-	?	5	35	X		X		Hillside
MBS-02	30.626639	-97.721892	MB	30	Ked	?	?	?	-	-	-	-	?	10	40		X	X		Hillside
SI-04	30.628637	-97.722446	C	30	Ked	6	2	6	-	-	-	-	N, O, V	35	65		X	X		Hillside
SI-06	30.624696	-97.720936	O	5	Ked	?	?	?	-	-	-	-	V, N, C	5	10	X			X	Drainage

* DATUM: NAD 1983 State Plane 4203

2A TYPE	TYPE	2B POINTS
C	Cave	30
SC	Solution cavity	20
SF	Solution-enlarged fracture(s)	20
F	Fault	20
O	Other natural bedrock features	5
MB	Manmade feature in bedrock	30
SW	Swallow hole	30
SH	Sinkhole	20
CD	Non-karst closed depression	5
Z	Zone, clustered or aligned features	30

8A INFILLING	
N	None, exposed bedrock
C	Coarse - cobbles, breakdown, sand, gravel
O	Loose or soft mud or soil, organics, leaves, sticks, dark colors
F	Fines, compacted clay-rich sediment, soil profile, gray or red colors
V	Vegetation. Give details in narrative description
FS	Flowstone, cements, cave deposits
X	Other materials

12 TOPOGRAPHY

Cliff, Hilltop, Hillside, Drainage, Floodplain, Streambed

I have read, I understood, and I have followed the Texas Commission on Environmental Quality's Instructions to Geologists. The information presented here complies with that document and is a true representation of the conditions observed in the field. My signature certifies that I am qualified as a geologist as defined by 30 TAC Chapter 213.

STATE OF TEXAS
MARK T. ADAMS
GEOLOGY
No. 1835
LICENSED
PROFESSIONAL GEOSCIENTIST

Date 6/17/2024

Sheet __1___ of __1____

TCEQ-0585-Table (Rev. 10-01-04)

P:\Project Folders\36-21-200 SLG WTP South Fork Interceptor\GIS\Maps\Task 5 Karst\1- Entire Alignment\Figure_5_features.aprx

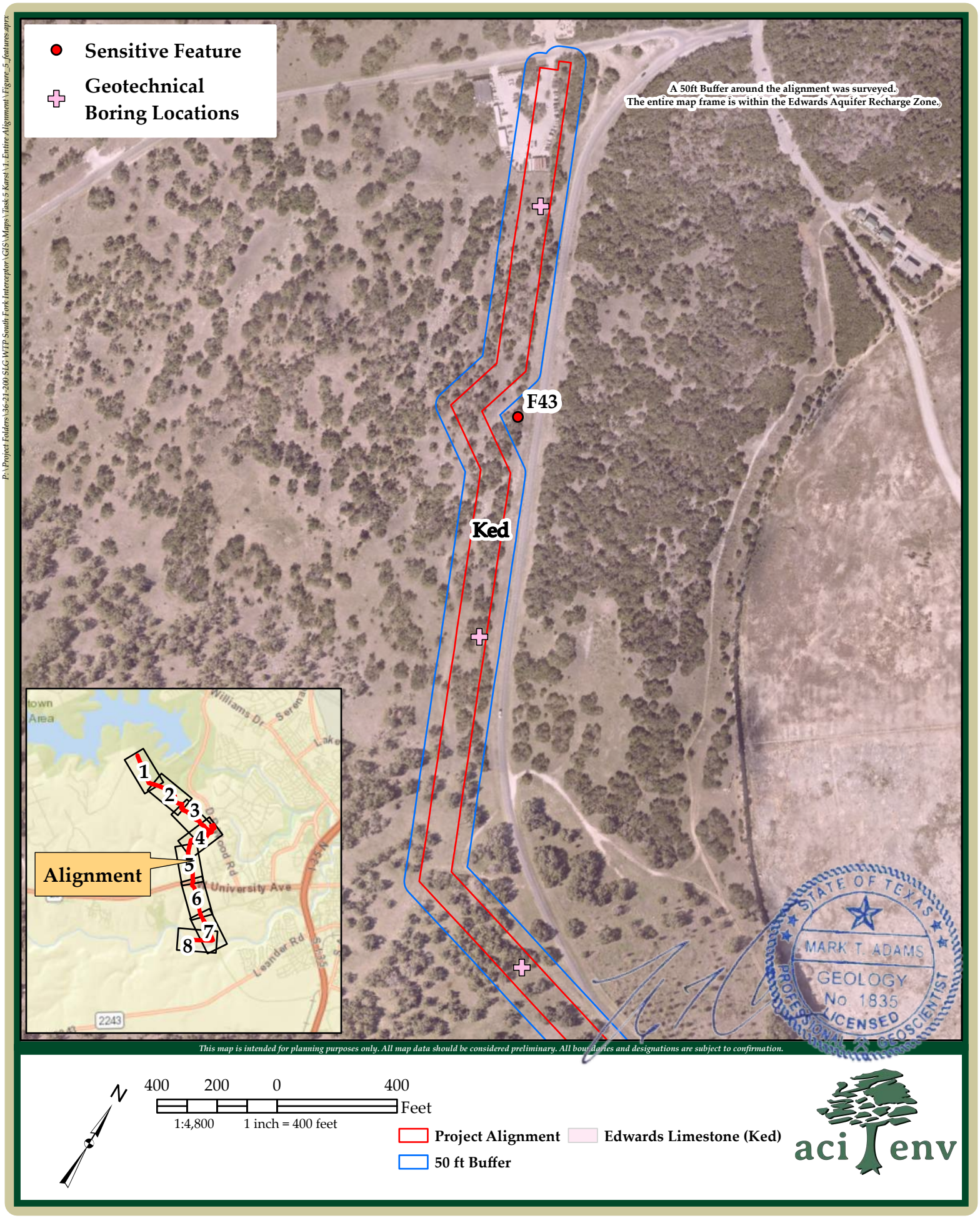

South Lake to South Fork Wastewater Improvements Project **aci Project No.: 36-21-200**

Figure 5: Geologic Features **Page 1 of 8** **June 2024**

P:\Project Folders\36-21-200 SLG WTP South Fork Interceptor\GIS\Maps\Task 5 Karst\1- Entire Alignment\Figure_5_features.aprx

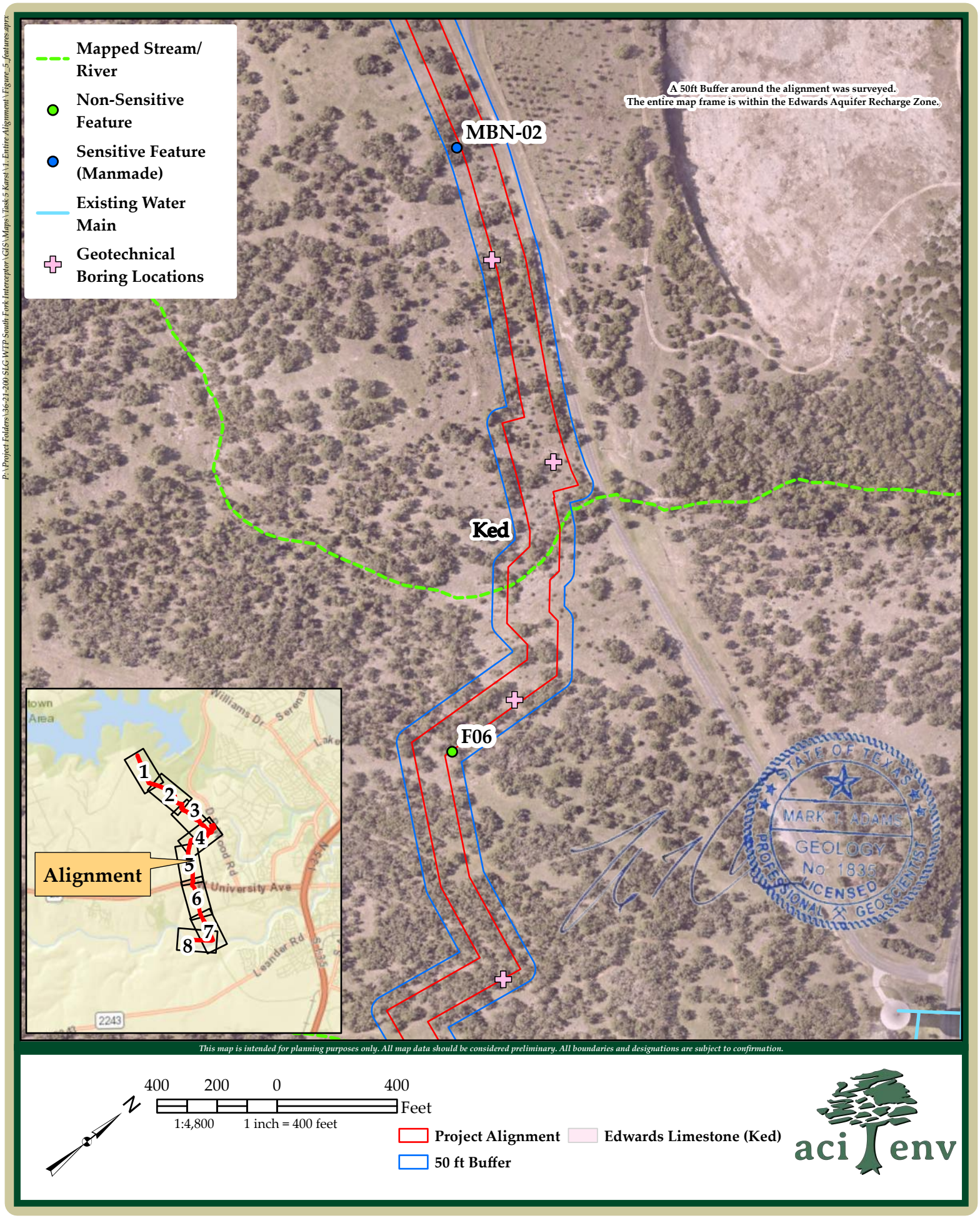

South Lake to South Fork Wastewater Improvements Project **aci Project No.: 36-21-200**

Figure 5: Geologic Features **Page 2 of 8** **June 2024**

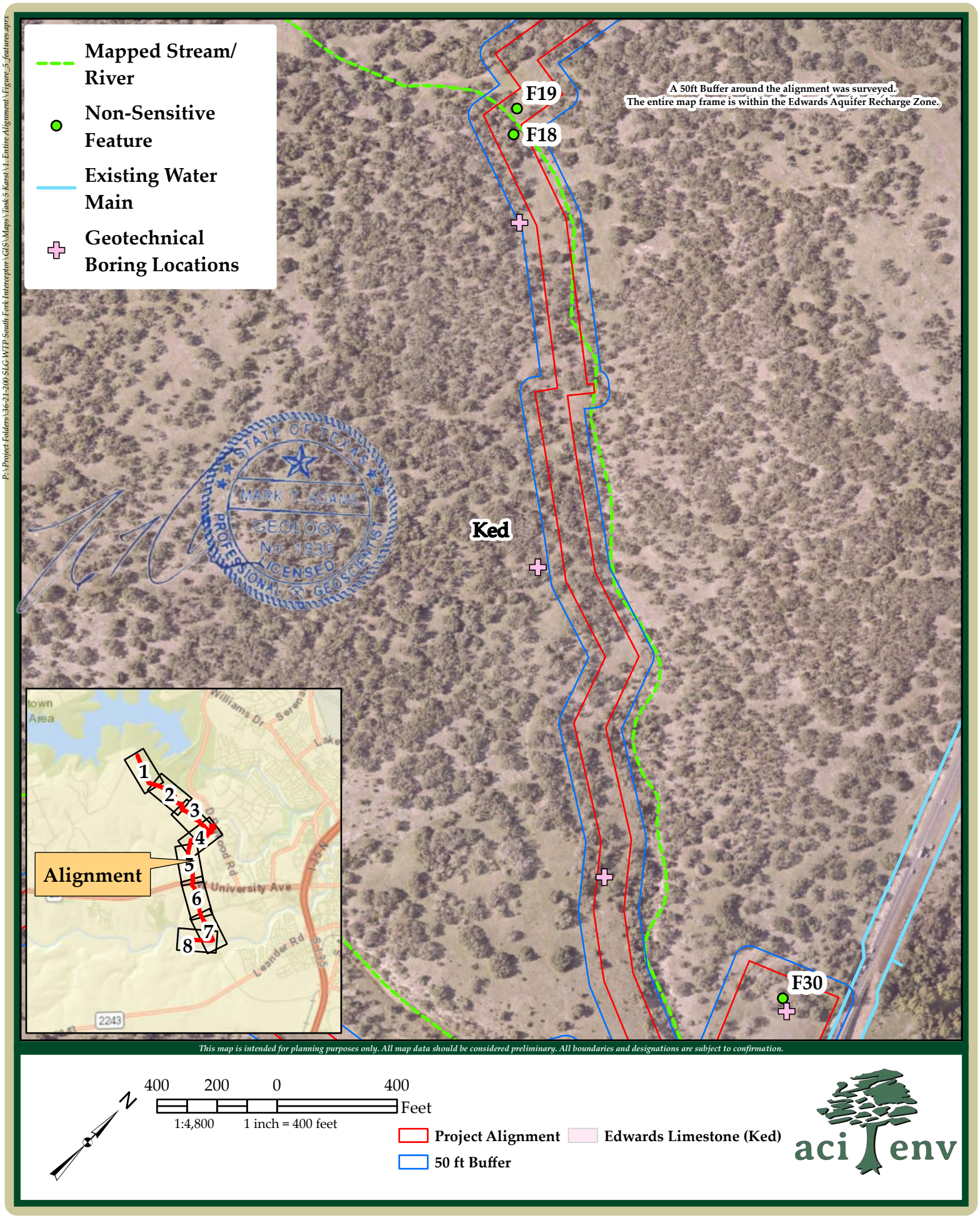

South Lake to South Fork Wastewater Improvements Project **aci Project No.: 36-21-200**

Figure 5: Geologic Features **Page 3 of 8** **June 2024**

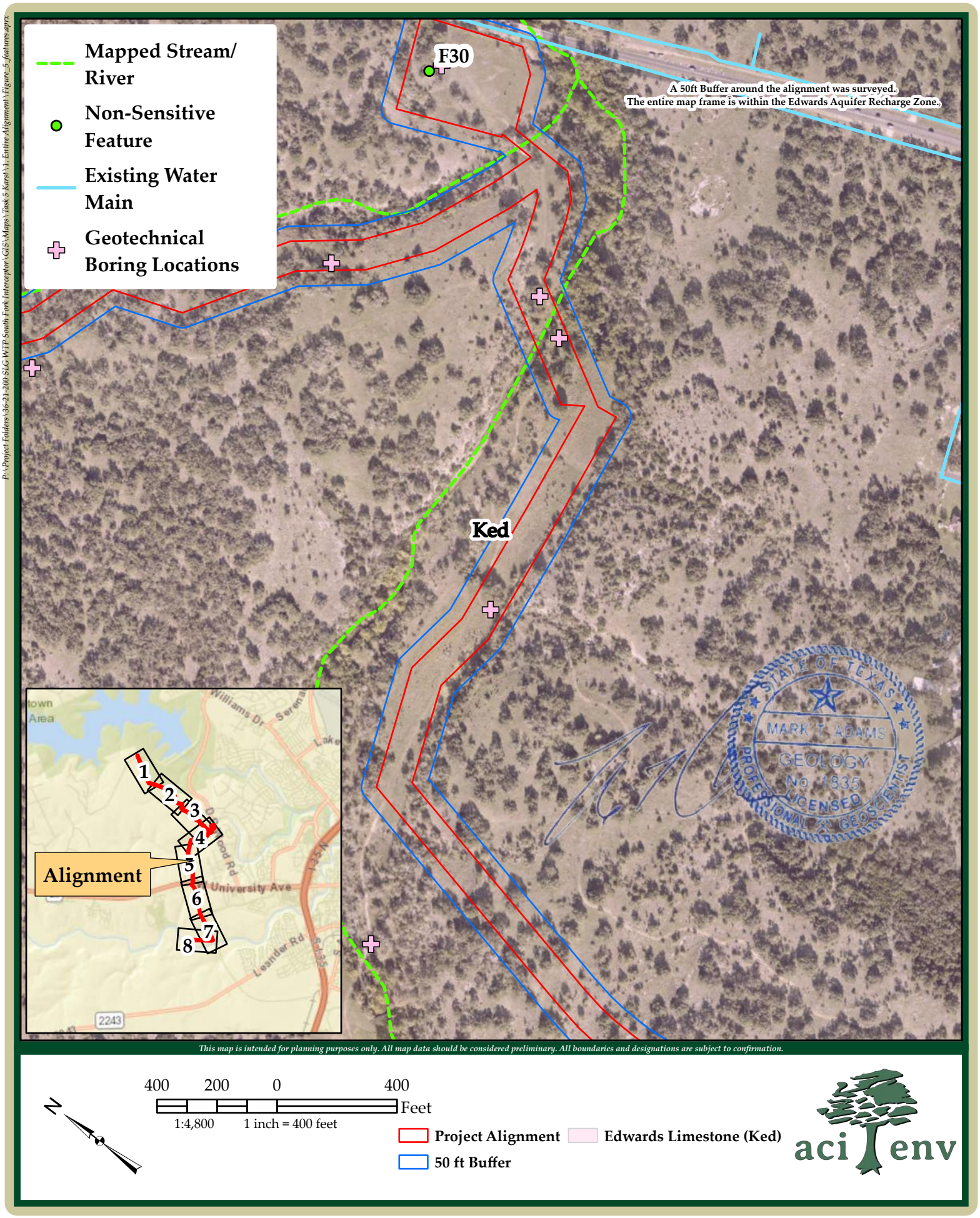

P:\Project Folders\36-21-200 SLG WTP South Fork Interceptor\GIS\Maps\Task 5 Karst\1- Entire Alignment\Figure_5_features.aprx

South Lake to South Fork Wastewater Improvements Project **aci Project No.: 36-21-200**

Figure 5: Geologic Features **Page 4 of 8** **June 2024**

P:\Project Folders\36-21-200 SLG WTP South Fork Interceptor\GIS\Maps\Task 5 Karst\1- Entire Alignment\Figure_5_features.aprx

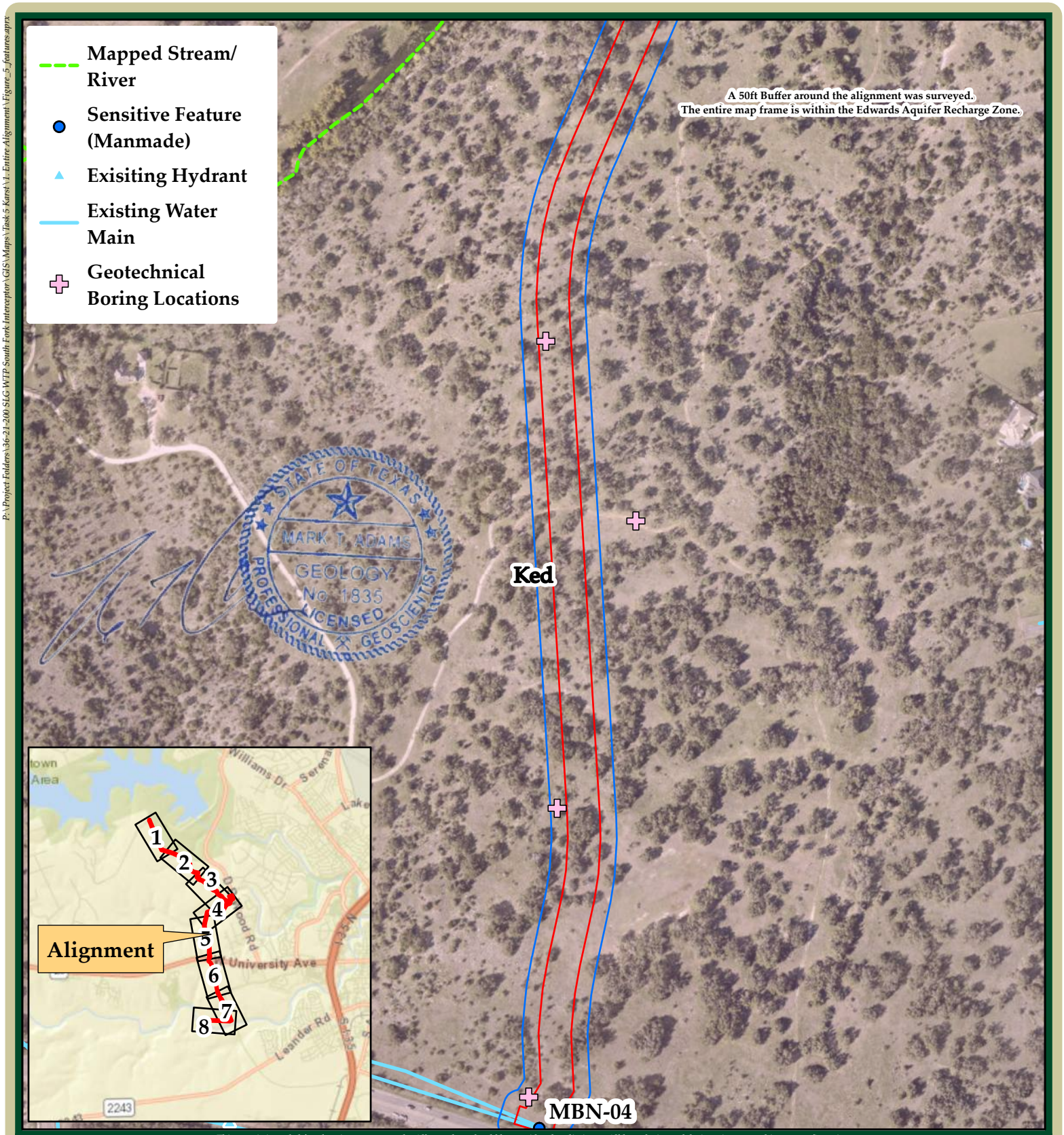

This map is intended for planning purposes only. All map data should be considered preliminary. All boundaries and designations are subject to confirmation.

N

400 200 0 400 Feet

1:4,800 1 inch = 400 feet

Project Alignment

Edwards Limestone (Ked)

50 ft Buffer

aci env

South Lake to South Fork Wastewater Improvements Project **aci Project No.: 36-21-200**

Figure 5: Geologic Features **Page 5 of 8** **June 2024**

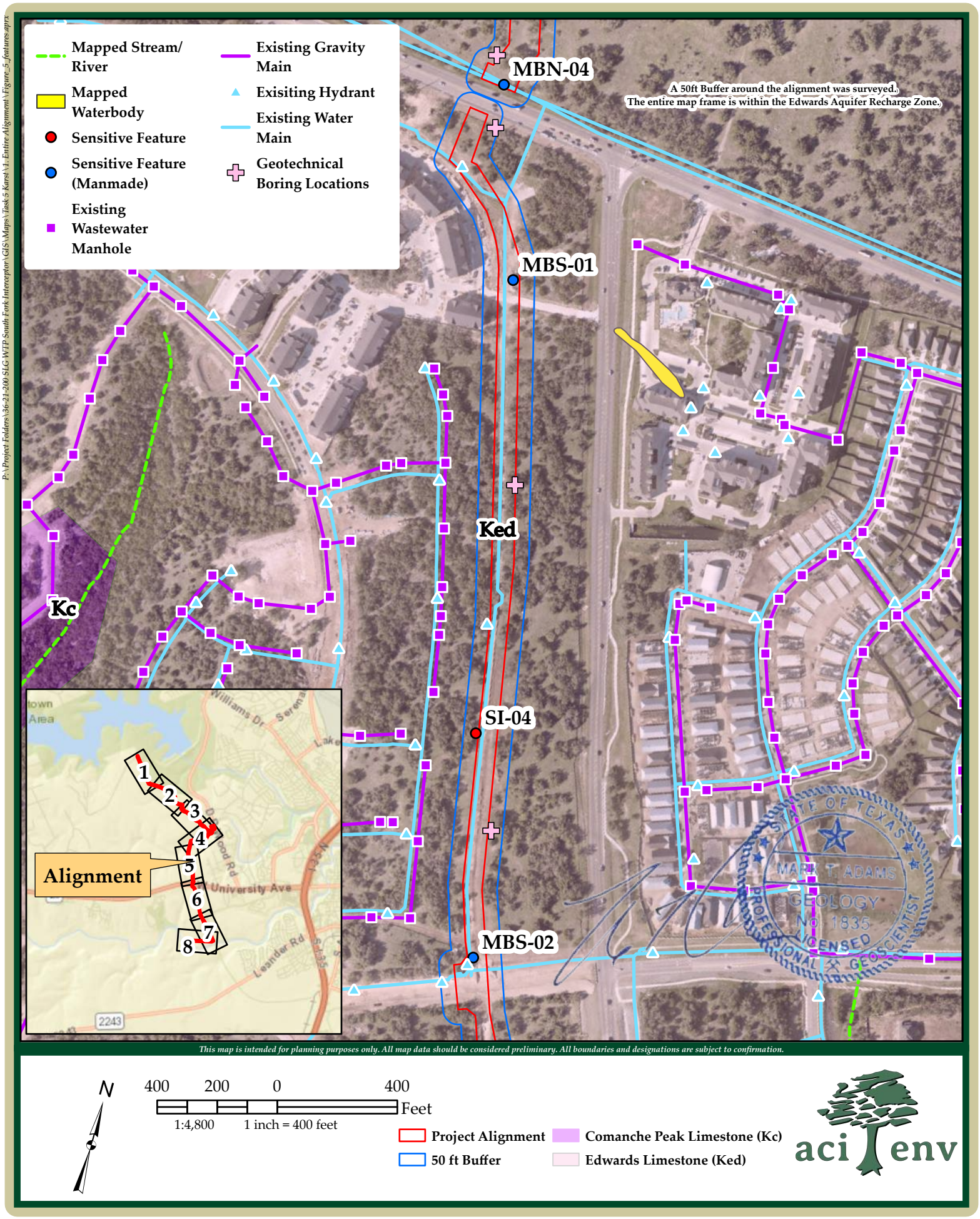

P:\Project Folders\36-21-200 SLG WTP South Fork Interceptor\GIS\Maps\Task 5 Karst\1- Entire Alignment\Figure_5_features.aprx

South Lake to South Fork Wastewater Improvements Project **aci Project No.: 36-21-200**

Figure 5: Geologic Features **Page 6 of 8** **June 2024**

P:\Project Folders\36-21-200 SLG WTP South Fork Interceptor\GIS\Maps\Task 5 Karst\1- Entire Alignment\Figure_5_features.aprx

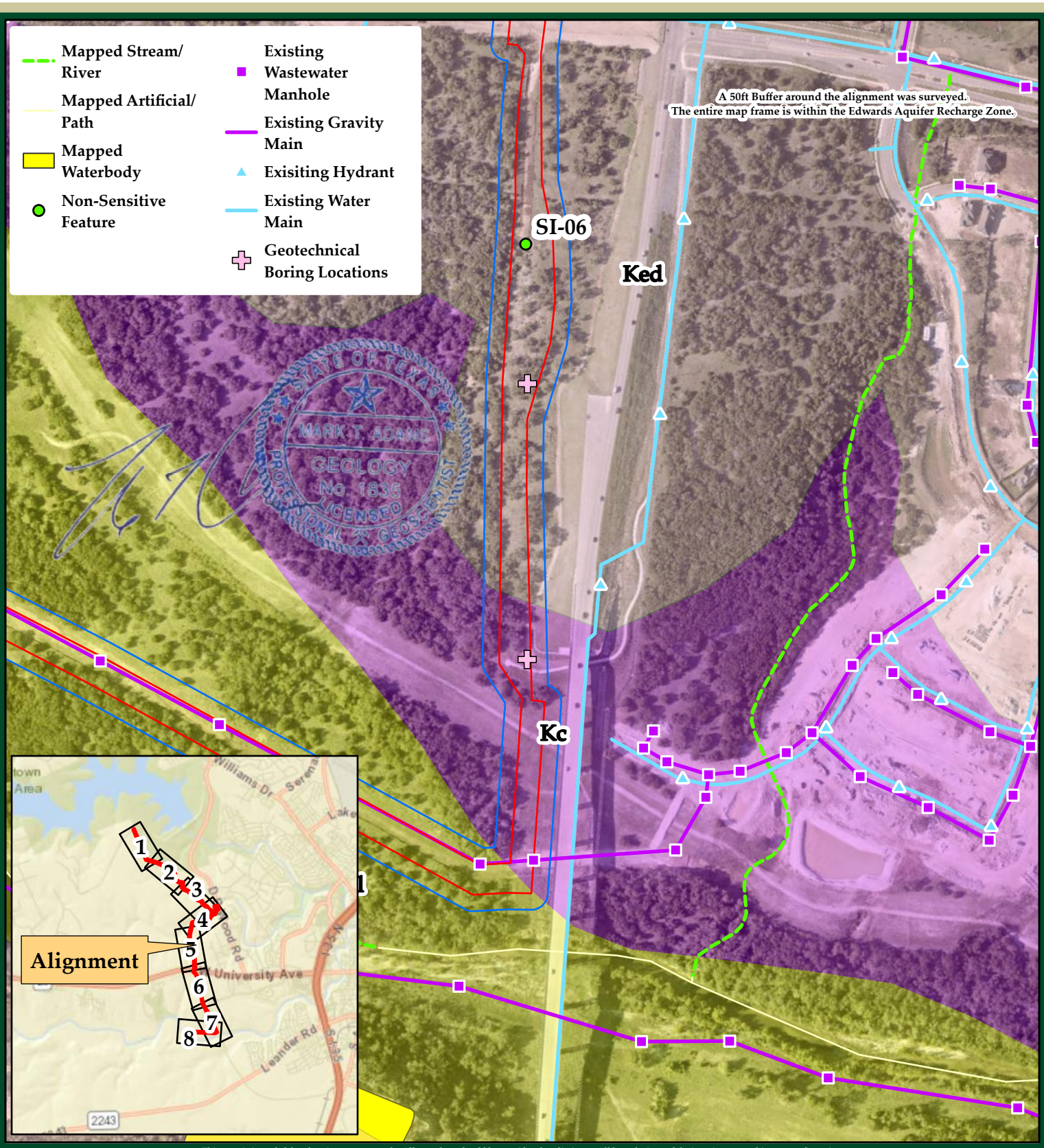

This map is intended for planning purposes only. All map data should be considered preliminary. All boundaries and designations are subject to confirmation.

N

400 200 0 400 Feet

1:4,800 1 inch = 400 feet

Project Alignment
50 ft Buffer
Alluvium (Qal)
Comanche Peak Limestone (Kc)
Edwards Limestone (Ked)

aci env

South Lake to South Fork Wastewater Improvements Project

aci Project No.: 36-21-200

Figure 5: Geologic Features

June 2024

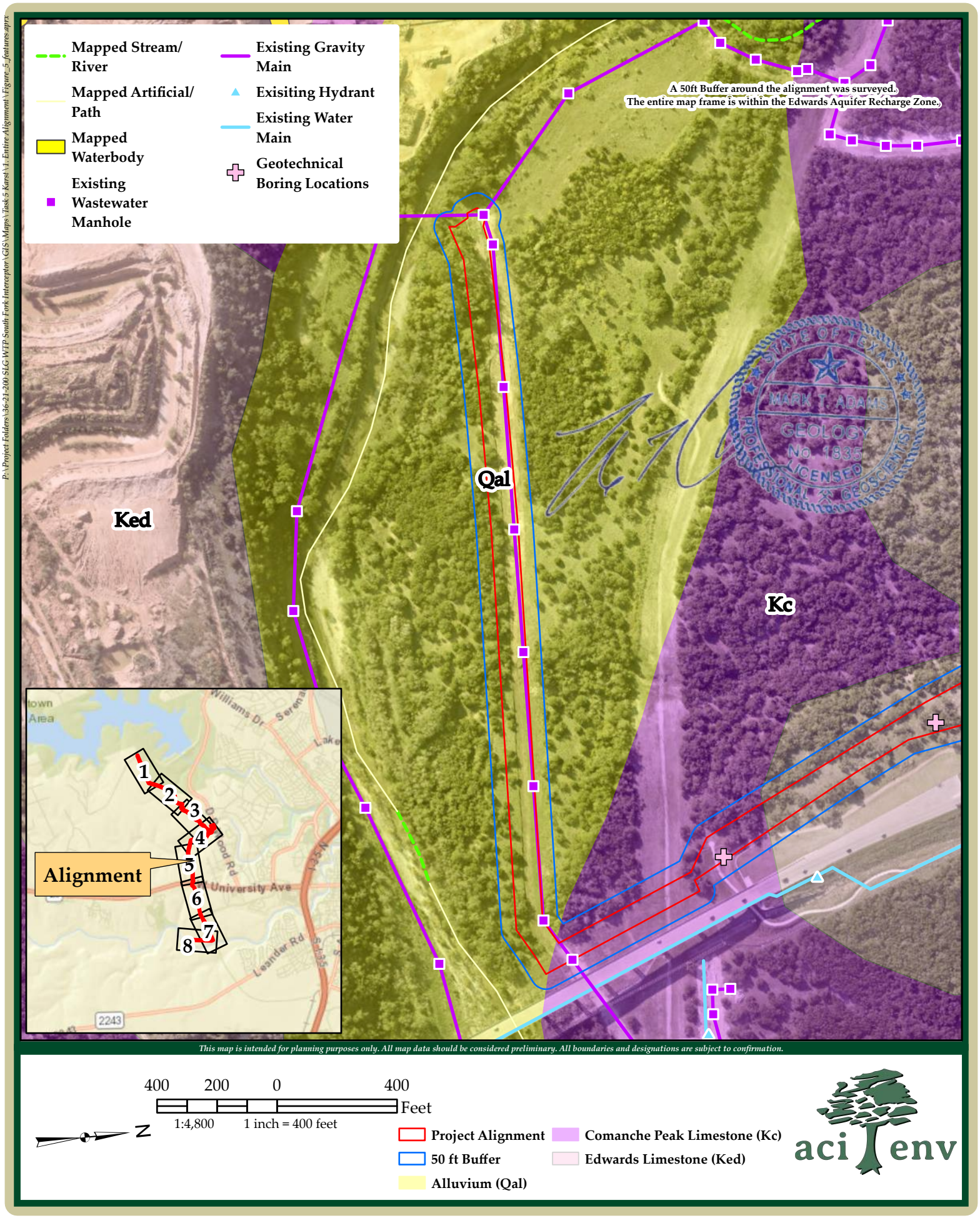

P:\Project Folders\36-21-200 SLG WTP South Fork Interceptor\GIS\Maps\Task 5 Karst\1- Entire Alignment\Figure_5_features.aprx

South Lake to South Fork Wastewater Improvements Project **aci Project No.: 36-21-200**

Figure 5: Geologic Features **Page 8 of 8** **June 2024**

F-06

GPS: 30.655157 -97.728453

This feature is a solution enlarged fracture, trending at 0°. The dimensions of F-06 are approximately 4 feet long, 1 foot wide, and 0.5 feet deep (vertically). The feature is located on a gently sloping hillside in the Edwards Limestone. The infill material consists of loose soils, organics, leaves, and sticks. No additional vertical development was noted beyond the plugged soils and the edges of the fracture are generally sharp and distinct, suggesting little to no lateral water flow into the feature. The catchment area is less than 1.6 acres. Due to the relatively small catchment area, the infiltration rate for the feature is determined to be low and assigned a point value of 7 points. This feature was given a total sensitivity rating of 37, thus the feature is non-sensitive in terms of recharge potential.

Recommendation: There are no required setbacks or protections for this feature.

Photo of F-06

F-18

GPS: 30.652722, -97.726107

This feature is a solution cavity positioned on a gently sloping hillside, located in the Edwards Limestone. The dimensions of F-18 are approximately 0.5 foot long by 0.5 foot wide, and 2 foot deep. The feature is not rock lined and does not appear to be of karst origin. The infill material consists of cobbles, fine sediment, and vegetation such as greenbrier and Texas persimmon. The drainage area is less than 1.6 acres. As such, the infiltration rate has been determined to be low, and assigned a point value of 10 points. This feature was given a total sensitivity rating of 30, thus the feature is non-sensitive in terms of recharge potential.

Recommendation: There are no required setbacks or protections for this feature.

Photo of F-18

F-19

GPS: 30.652917, -97.726267

This feature is a solution cavity positioned on a gently sloping hillside, located in the Edwards Limestone. The dimensions of F-19 are approximately 1 foot long by 1 foot wide, and 1 foot deep. The feature does not appear to have any portals beyond the initial surface expression. The infill material consists of plugged soils and loose material in the form of organics, leaves, and sticks. The potential drainage area is likely less than 1.6 acres. As such, the infiltration rate has been determined to be low, and assigned a point value of 12 points. This feature was given a total sensitivity rating of 32, thus the feature is non-sensitive in terms of recharge potential.

Recommendation: There are no required setbacks or protections for this feature.

Photo of F-19

F-30

GPS: 30.648595, -97.717785

This feature is a solution cavity positioned on a gently sloping hillside, located in the Edwards Limestone. The dimensions of F-30 are approximately 3 feet in diameter by 0.5 foot deep. The infill material consists of cobbles, organic material such as leaves, and sticks, as well as vegetation such as southern dewberry and persimmon. The potential drainage area is likely lower than 1.6 acres. As such, the infiltration rate has been determined to be low and assigned a point value of 8 points. This feature was given a total sensitivity rating of 28, thus the feature is non-sensitive in terms of recharge potential.

Recommendation: There are no required setbacks or protections for this feature.

Photo of F-30

F-43

GPS: 30.663779, -97.737627

This feature is a sinkhole positioned on a gently sloping hillside, located in the Edwards Limestone. The dimensions of the drainage basin are approximately 10 feet in diameter, and 1 foot deep. The infill material consists large cobbles, leaf litter and other organic material, and vegetation including oaks and persimmon. The drainage area is less than 1.6 acres. The infiltration rate was determined to be intermediate and assigned a value of 34 points. The feature was given a total sensitivity rating of 54 points, thus the feature is sensitive in terms of recharge potential. This feature was brought to the attention of the engineer and the alignment was redesigned so that the project area, including all easements, would not come within 50 feet of the feature drainage basin. The distance from the edge of the drainage basin to the project area is approximately 85 feet.

Recommendation: A 50-foot buffer around the drainage basin of the feature is already being maintained.

Photo of F-43

MBN-02

GPS: 30.65881, -97.733266

This feature is a manmade feature in bedrock (a pipe). The dimensions of this feature are unknown and the infill material for this feature is undetermined. The feature is located in the Edwards Limestone and is positioned on a gently sloping hillside. This feature has a catchment area of less than 1.6 acres. It was determined that this feature has a low infiltration rate and given a point value of 5 points due to its status as a manmade feature in bedrock and lack of subsurface interference. This feature was given a total sensitivity rating of 35, thus the feature is non-sensitive in terms of recharge potential.

Recommendation: No setbacks are required for this feature; however, this feature needs to be brought to the attention of the engineer.

Photo of MBN-02

MBN-04
GPS: 30.63446, -97.723837
This feature is a manmade feature in bedrock (a waterline valve). The dimensions of this feature are unknown and the infill material for this feature is undetermined. The feature is located in the Edwards Limestone and is positioned on a gently sloping hillside. This feature has a catchment area of less than 1.6 acres. It was determined that this has a low infiltration rate of 10 points due and has been deemed sensitive as it is an underground utility. This feature was given a total sensitivity rating of 40 and deemed sensitive for the sole purpose of being brought to the attention of the engineer but does not require any setbacks.

Recommendation: No setbacks are required for this feature; however, this feature needs to be brought to the attention of the engineer.

Photo of MBN-04

MBS-01
GPS: 30.632743, -97.723236
This feature is a manmade feature in bedrock (a multifamily exterior wall field mock-up) with an approximate length of 20 feet, width of 10 feet, and extends below the surface for an unknown depth. The feature is located in the Edwards Limestone and is positioned on a gently sloping hillside. This feature has a catchment area of less than 1.6 acres and a low infiltration rate of 5 points. It was determined that this feature is non-sensitive and given a total sensitivity rating of 35 points due to its status as a manmade feature in bedrock and lack of subsurface interference.

Recommendation: No setbacks are required for this feature; however, this feature needs to be brought to the attention of the engineer.

Photo of MBS-01

MBS-02
GPS: 30.626639, -97.721892

This feature is a manmade feature in bedrock, a fire hydrant and waterline utilities. The dimensions of this feature are unknown. The feature is located in the Edwards Limestone and is positioned on a gently sloping hillside. This feature has a catchment area of less than 1.6 acres. It was determined that this has a low infiltration rate of 10 points due and has been deemed sensitive as it is an underground utility. This feature was given a total sensitivity rating of 40 points and deemed sensitive for the sole purpose of being brought to the attention of the engineer but does not require any setbacks.

Recommendation: No setbacks are required for this feature; however, this feature needs to be brought to the attention of the engineer.

Photo of MBS-02

SI-04

GPS: 30.628637, -97.722446

SI-04 is a feature that was reportedly discovered as part of the Southwest Bypass project in Georgetown, Texas. This feature is shown in the GA table and identified as a small cave on a gently sloping hillside in the Edwards Group (Ked) with no discernible footprint beyond the sink area. The cave was measured to be approximately 6 feet long by 2 feet wide by 6 feet deep. The aperture of the cave is mostly clean bedrock, however, infill material consisted of loosely compact soils, cobbles, and organic materials, as well as vegetation. The drainage area is less than 1.6 acres. It was determined that this feature has a high infiltration and assigned a value of 35 points. This feature was given a total sensitivity rating of 65 points and determined to be sensitive in terms of recharge aquifer potential.

The wastewater line project alignment is approximately 55 feet east of SI-04 with a waterline and a recent surface drainage swale between. The waterline appears to have been installed around 2016 or 2017 and the drainage swale appears to be much more recent. Based on the presence of these 2 manmade features, it does not appear that the proposed wastewater line will impact SI-04 and that the current anticipated distance of approximately 55 feet is protective of the feature.

Recommendation: This feature is sensitive. As this feature was known previously from associated projects and is technically out of the proposed wastewater line project area, a specific buffer is not discussed.

Photos of SI-04

Photo of drainage swale adjacent to SI-04

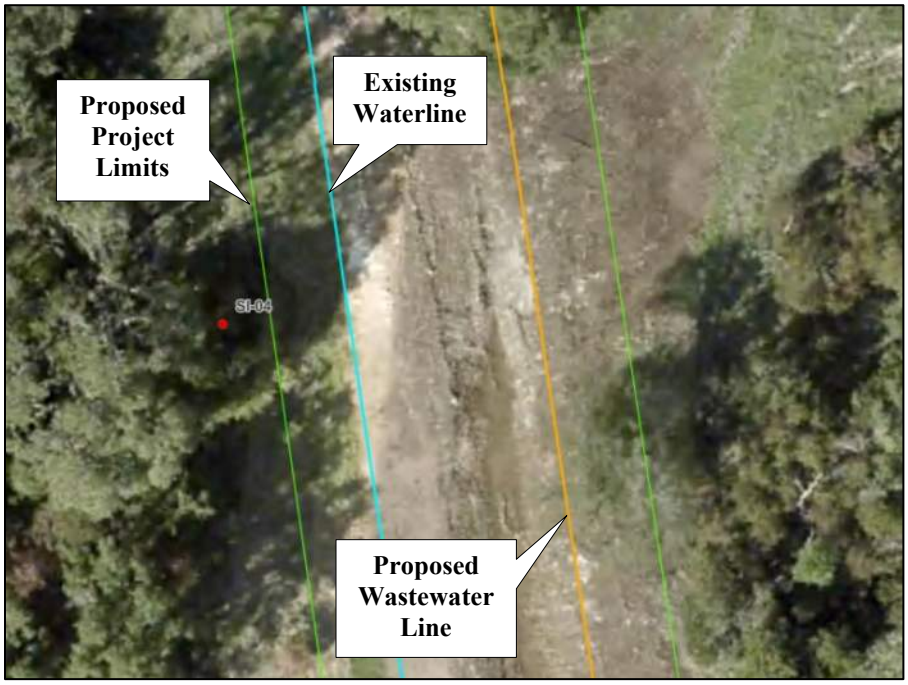

SI-04 and project limits on aerial background.

SI-06

GPS: 30.624696, -97.720936

SI-06 is considered an "other- natural bedrock feature", rimrock with several dry seeps. This feature is positioned in a drainage in the Edwards Group (Ked). The feature was measured to be at least 20 feet in length and approximately 20 feet tall, at its deepest, within the alignment. The infill material consisted of vegetation such as Ashe juniper, live oak, cedar elm, and persimmon, as well as bedrock, and cobbles. The drainage area is greater than 1.6 acres; however, it was determined that this feature has low infiltration rate (5 pts) due to its lack of karstic characteristics. SI-06 is a scour type feature located within a drainage, formed by erosional activities over time. The dry seeps scattered throughout the rimrock are located at the top of the feature and appear to by relict or ephemeral discharge features. This feature was given a total sensitivity rating of 10 points and determined to be non-sensitive in terms of recharge aquifer potential.

Recommendation: This feature is non-sensitive. No setbacks are required.

Photo of SI-06

View of SI-06 from the top down

ATTACHMENT C

Historic Aerial Photographs

Prepared for:

ACI CONSULTING
1001 Mopac Circle
Austin, TX 78746

BANKS ENVIRONMENTAL DATA
A DIVISION OF THE BANKS GROUP

Historical Aerial Photographs

South Lake Georgetown WTP Wastew

TX

Williamson County

PO #: 36-21-200

ES-141562

Wednesday, February 8, 2023

Date: 2022
Source: USDA

0 1,000 2,000 4,000 Feet

BANKS
ENVIRONMENTAL DATA
A DIVISION OF THE BANKS GROUP

Date: 2016
Source: USDA

0 1,000 2,000 4,000 Feet

BANKS
ENVIRONMENTAL DATA
A DIVISION OF THE BANKS GROUP

Date: 2010
Source: USDA

0 1,000 2,000 4,000 Feet

BANKS
ENVIRONMENTAL DATA
A DIVISION OF THE BANKS GROUP

Date: 2004
Source: USDA

0 1,000 2,000 4,000 Feet

BANKS
ENVIRONMENTAL DATA
A DIVISION OF THE BANKS GROUP

Date: 1995
Source: USGS

0 1,000 2,000 4,000 Feet

BANKS
ENVIRONMENTAL DATA
A DIVISION OF THE BANKS GROUP

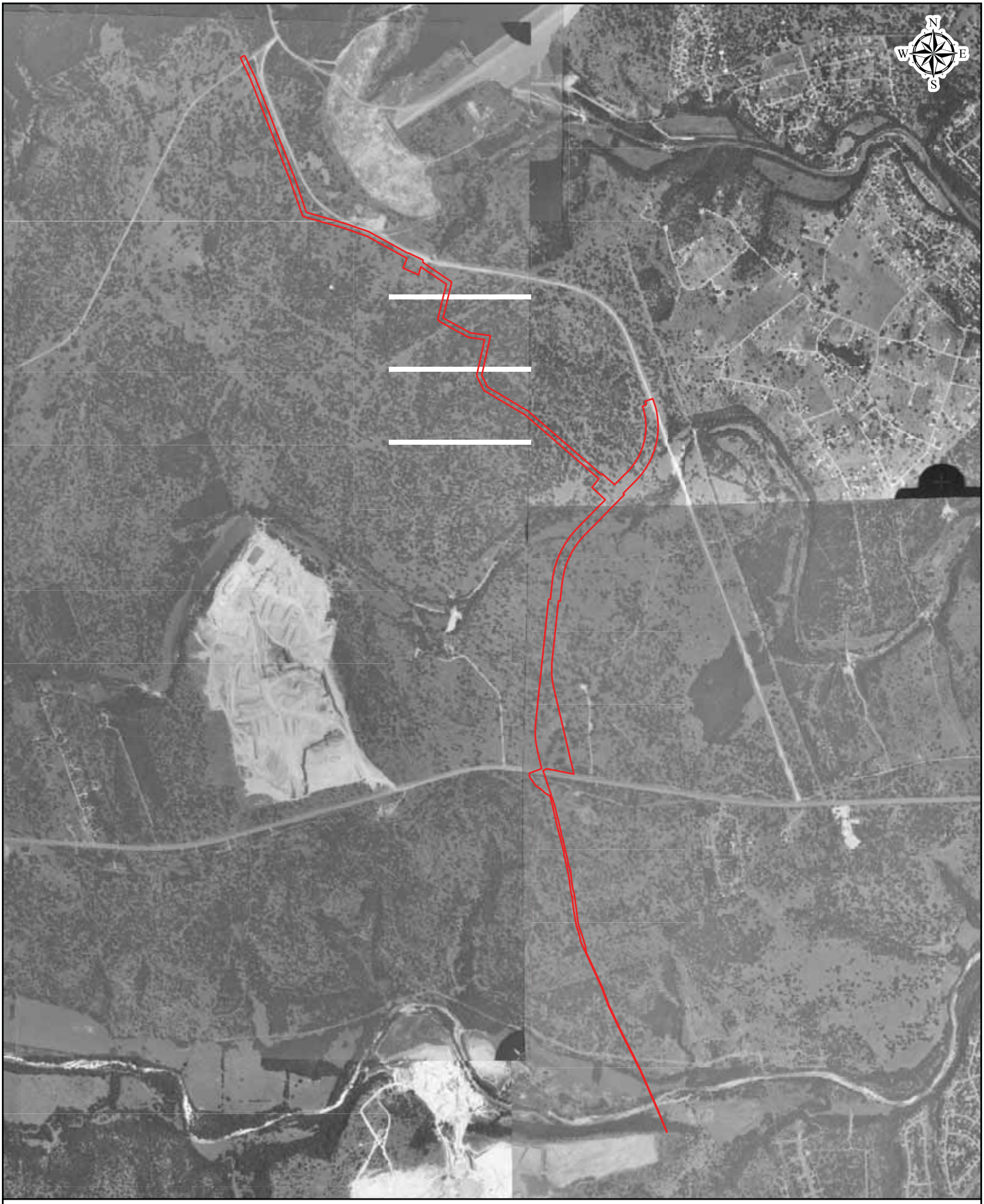

Date: 1988
Source: TXDOT

0 1,000 2,000 4,000 Feet

BANKS
ENVIRONMENTAL DATA
A DIVISION OF THE BANKS GROUP

Date: 1981
Source: USGS

0 1,000 2,000 4,000 Feet

BANKS
ENVIRONMENTAL DATA
A DIVISION OF THE BANKS GROUP

Date: 1974
Source: USGS

0 1,000 2,000 4,000 Feet

BANKS
ENVIRONMENTAL DATA
A DIVISION OF THE BANKS GROUP

Date: 1962
Source: USGS

0 1,000 2,000 4,000 Feet

BANKS
ENVIRONMENTAL DATA
A DIVISION OF THE BANKS GROUP

Date: 1953
Source: AMS

0 1,000 2,000 4,000 Feet

BANKS
ENVIRONMENTAL DATA
A DIVISION OF THE BANKS GROUP

Date: 1941
Source: ASCS

0 1,000 2,000 4,000 Feet

BANKS
ENVIRONMENTAL DATA
A DIVISION OF THE BANKS GROUP

AERIAL SOURCE DEFINITIONS

Acronym	Agency
NASA	National Aeronautics & Space Administration
AMS	Army Mapping Service
ASCS	Agricultural Stabilization & Conservation Service
SCS	Soil Conservation Service
USBR	United States Bureau of Reclamation
Fairchild	Fairchild Aerial Surveys
TXDOT	Texas Department of Transportation
BLM	Bureau of Land Management
USAF	United States Air Force
USCOE	United States Corps of Engineers
USDA	United States Department of Agriculture
USGS	United States Geological Survey
WALLACE	Wallace-Zingery Aerial Surveys
TNRIS	Texas Natural Resources Information System

COPYRIGHT POLICY & DISCLAIMER

This report is solely for the limited use of the client and its customers. Banks Environmental Data, Inc. makes no warranties as to accuracy, validity, completeness, merchantability, quality, condition, suitability or fitness for a particular use or purpose in respect to this report and any information contained herein. All risk is assumed by the user. Banks Environmental Data, Inc. assumes no liability to any party for loss or damage whether rising out of errors or omissions, negligence, accident, or any other cause. In no event shall Banks Environmental Data, Inc., its affiliates or agents, be liable to anyone for special incidental, consequential or exemplary damages.

Water Pollution Abatement Plan Application

Texas Commission on Environmental Quality

for Regulated Activities on the Edwards Aquifer Recharge Zone and Relating to 30 TAC §213.5(b), Effective June 1, 1999

To ensure that the application is administratively complete, confirm that all fields in the form are complete, verify that all requested information is provided, consistently reference the same site and contact person in all forms in the application, and ensure forms are signed by the appropriate party.

Note: Including all the information requested in the form and attachments contributes to more streamlined technical reviews.

Signature

To the best of my knowledge, the responses to this form accurately reflect all information requested concerning the proposed regulated activities and methods to protect the Edwards Aquifer. This **Water Pollution Abatement Plan Application Form** is hereby submitted for TCEQ review and Executive Director approval. The form was prepared by:

Print Name of Customer/Agent: Gerald S. Furrier

Date: 06/13/24

Signature of Customer/Agent:

Regulated Entity Name: South Lake to South Fork Wastewater Improvements

Regulated Entity Information

1. The type of project is:

   ☐ Residential: Number of Lots:_____
   ☐ Residential: Number of Living Unit Equivalents:_____
   ☐ Commercial
   ☐ Industrial
   ☒ Other:Wastewater Interceptor and Lift Stations

2. Total site acreage (size of property):2.2 (Cedar Breaks: 0.52 and D B Wood Rd: 1.68)

3. Estimated projected population:N/A

4. The amount and type of impervious cover expected after construction are shown below:

Table 1 - Impervious Cover Table

Impervious Cover of Proposed Project	Sq. Ft.	Sq. Ft./Acre	Acres
Structures/Rooftops	See table below	÷ 43,560 =	
Parking		÷ 43,560 =	
Other paved surfaces		÷ 43,560 =	
Total Impervious Cover		÷ 43,560 =	

Total Impervious Cover _____ ÷ Total Acreage _____ X 100 = _____% Impervious Cover

5. ☒ **Attachment A - Factors Affecting Surface Water Quality**. A detailed description of all factors that could affect surface water and groundwater quality that addresses ultimate land use is attached.

6. ☒ Only inert materials as defined by 30 TAC §330.2 will be used as fill material.

For Road Projects Only

Complete questions 7 - 12 if this application is exclusively for a road project.

7. Type of project:

   ☐ TXDOT road project.
   ☐ County road or roads built to county specifications.
   ☐ City thoroughfare or roads to be dedicated to a municipality.
   ☐ Street or road providing access to private driveways.

8. Type of pavement or road surface to be used:

   ☐ Concrete
   ☐ Asphaltic concrete pavement
   ☐ Other: _____

9. Length of Right of Way (R.O.W.): _____ feet.

   Width of R.O.W.: _____ feet.
   L x W = _____ Ft^2 ÷ 43,560 Ft^2/Acre = _____ acres.

10. Length of pavement area: _____ feet.

    Width of pavement area: _____ feet.
    L x W = _____ Ft^2 ÷ 43,560 Ft^2/Acre = _____ acres.
    Pavement area _____ acres ÷ R.O.W. area _____ acres x 100 = _____% impervious cover.

11. ☐ A rest stop will be included in this project.

    ☐ A rest stop will not be included in this project.

Table 1 - Impervious Cover Table

Cedar Breaks Lift Station site

Impervious Cover of Proposed Project	Sq. Ft.	Sq. Ft/Acre	Acres
Structures/Rooftop	1005.00	43,560	0.02
Parking	0.00	43,560	0.00
Other Paved Surfaces	2825.00	43,560	0.06
Total Impervious Cover	3830.00	43,560	0.09

Total Impervious Cover	0.09
Total Acreage	0.52
% Impervious Cover	17.31

D B Wood Lift Station site

Impervious Cover of Proposed Project	Sq. Ft.	Sq. Ft/Acre	Acres
Structures/Rooftop	3121.00	43,560	0.07
Parking	0.00	43,560	0.00
Other Paved Surfaces	9931.00	43,560	0.23
Total Impervious Cover	13052.00	43,560	0.30

Total Impervious Cover	0.30
Total Acreage	1.68
% Impervious Cover	17.84

12. ☐ Maintenance and repair of existing roadways that do not require approval from the TCEQ Executive Director. Modifications to existing roadways such as widening roads/adding shoulders totaling more than one-half (1/2) the width of one (1) existing lane require prior approval from the TCEQ.

Stormwater to be generated by the Proposed Project

13. ☒ **Attachment B - Volume and Character of Stormwater**. A detailed description of the volume (quantity) and character (quality) of the stormwater runoff which is expected to occur from the proposed project is attached. The estimates of stormwater runoff quality and quantity are based on the area and type of impervious cover. Include the runoff coefficient of the site for both pre-construction and post-construction conditions.

Wastewater to be generated by the Proposed Project

14. The character and volume of wastewater is shown below:

100% Domestic	13,260,000Gallons/day
_____% Industrial	_____Gallons/day
_____% Commingled	_____Gallons/day

TOTAL gallons/day 13,260,000 (at build out condition)

15. Wastewater will be disposed of by:

☐ On-Site Sewage Facility (OSSF/Septic Tank):

☐ **Attachment C - Suitability Letter from Authorized Agent**. An on-site sewage facility will be used to treat and dispose of the wastewater from this site. The appropriate licensing authority's (authorized agent) written approval is attached. It states that the land is suitable for the use of private sewage facilities and will meet or exceed the requirements for on-site sewage facilities as specified under 30 TAC Chapter 285 relating to On-site Sewage Facilities.

☐ Each lot in this project/development is at least one (1) acre (43,560 square feet) in size. The system will be designed by a licensed professional engineer or registered sanitarian and installed by a licensed installer in compliance with 30 TAC Chapter 285.

☒ Sewage Collection System (Sewer Lines):

☐ Private service laterals from the wastewater generating facilities will be connected to an existing SCS.

☐ Private service laterals from the wastewater generating facilities will be connected to a proposed SCS.

☐ The SCS was previously submitted on_____.

☒ The SCS was submitted with this application.

☐ The SCS will be submitted at a later date. The owner is aware that the SCS may not be installed prior to Executive Director approval.

☒ The sewage collection system will convey the wastewater to the San Gabriel Wastewater (name) Treatment Plant. The treatment facility is:

☒ Existing.
☐ Proposed.

16. ☒ All private service laterals will be inspected as required in 30 TAC §213.5.

Site Plan Requirements

Items 17 – 28 must be included on the Site Plan.

17. ☒ The Site Plan must have a minimum scale of 1" = 400'.

Site Plan Scale: 1" = 20'.

18. 100-year floodplain boundaries:

☒ Some part(s) of the project site is located within the 100-year floodplain. The floodplain is shown and labeled.
☐ No part of the project site is located within the 100-year floodplain.
The 100-year floodplain boundaries are based on the following specific (including date of material) sources(s): FEMA FIRM 48491C0290E Effective 9/26/2008

19. ☒ The layout of the development is shown with existing and finished contours at appropriate, but not greater than ten-foot contour intervals. Lots, recreation centers, buildings, roads, open space, etc. are shown on the plan.

☐ The layout of the development is shown with existing contours at appropriate, but not greater than ten-foot intervals. Finished topographic contours will not differ from the existing topographic configuration and are not shown. Lots, recreation centers, buildings, roads, open space, etc. are shown on the site plan.

20. All known wells (oil, water, unplugged, capped and/or abandoned, test holes, etc.):

☐ There are _____ (#) wells present on the project site and the locations are shown and labeled. (Check all of the following that apply)

☐ The wells are not in use and have been properly abandoned.
☐ The wells are not in use and will be properly abandoned.
☐ The wells are in use and comply with 16 TAC §76.

☒ There are no wells or test holes of any kind known to exist on the project site.

21. Geologic or manmade features which are on the site:

☒ All sensitive geologic or manmade features identified in the Geologic Assessment are shown and labeled.
☐ No sensitive geologic or manmade features were identified in the Geologic Assessment.
☐ **Attachment D - Exception to the Required Geologic Assessment**. A request and justification for an exception to a portion of the Geologic Assessment is attached.

22. ☒ The drainage patterns and approximate slopes anticipated after major grading activities.
23. ☒ Areas of soil disturbance and areas which will not be disturbed.
24. ☒ Locations of major structural and nonstructural controls. These are the temporary and permanent best management practices.
25. ☒ Locations where soil stabilization practices are expected to occur.
26. ☒ Surface waters (including wetlands).

    ☐ N/A

27. ☒ Locations where stormwater discharges to surface water or sensitive features are to occur.

    ☐ There will be no discharges to surface water or sensitive features.

28. ☒ Legal boundaries of the site are shown.

Administrative Information

29. ☒ Submit one (1) original and one (1) copy of the application, plus additional copies as needed for each affected incorporated city, groundwater conservation district, and county in which the project will be located. The TCEQ will distribute the additional copies to these jurisdictions. The copies must be submitted to the appropriate regional office.
30. ☒ Any modification of this WPAP will require Executive Director approval, prior to construction, and may require submission of a revised application, with appropriate fees.

City of Georgetown

South Lake to South Fork Wastewater Improvements

Water Pollution Abatement Plan

The construction activities associated with the South Lake to South Fork Wastewater Interceptor project have the potential to create additional total suspended solids (TSS) loadings during the construction. This potential increase in loading will be mitigated with the use of silt fencing and rock berms that will be placed downgradient of the active construction areas and placement of a stabilized construction entrance (SCE) at the entrance of the construction area. Silt fencing will also be placed around storm drain inlets when installed. These measures will help minimize TSS impacts during storm events.

The Cedar Breaks Lift Station site is 0.52 acres. The site has previously not been developed. The impervious cover of the proposed site is 0.09 acres (17.31%). The B D Woods Lift Station site is 1.68 acres. The site has previously not been developed. The impervious cover of the proposed site is 0.30 acres (17.86%). Post-construction stormwater controls will include vegetated filter strips to the north east of the Cedar Breaks Rd site and west of the D B Wood site. The total removal of TSS due to the impervious cover is 85% and these measures will protect surface water quality before discharging offsite to Lake Georgetown and the San Gabriel Watershed. See Attachment B – Volume and Character of Stormwater for TSS loading calculations.

City of Georgetown

South Lake to South Fork Wastewater

Interceptor Improvements

Water Pollution Abatement Plan

The lift stations for South Lake to South Fork Wastewater Interceptor site are currently undeveloped land. The project site consists of 50-75% grass cover. The site's topography and site boundaries minimize the potential for off-site runoff to flow onto and across the project site.

The project construction will add 0.09 acres (17.31%) of impervious cover to the Cedar Breaks Lift Station site and 0.30 acres (17.86%) of impervious cover to the D B Wood Lift Station site. This increase will be due to the construction of the lift stations, buildings, and pavement associated with the new lift station.

The drainage area is comprised of two sub-basins which total approximately 2.2 acres. The Cedar Breaks Lift Station (CB-LS) will have the onsite stormwater drain through the opening provided under the proposed fencecrete. Two separate channels will direct the stormwater to the existing outfall. The D B Wood Lift Station (DB-LS) will also have the onsite stormwater drain through the opening of the proposed fencecrete.

Table 1 lists the runoff coefficients and volume of stormwater runoff for each lift station in 100-yr frequency.

Table 1. 100-Year Pre- and Post-Project Stormwater Data

Sub-Basin	Pre-Construction Runoff Coefficient	Post-Construction Runoff Coefficient	Pre-Construction Discharge (cf/yr)	Post-Construction Discharge (cf/yr)
CB-LS	0.03	0.11	1,812	6,563
DB-LS	0.03	0.29	5,889	57,362

Site Plan

GEORGETOWN
TEXAS
more than welcome

CITY OF GEORGETOWN, TEXAS

CEDAR BREAKS AND D B WOOD LIFT STATIONS

PROJECT NO. PRJ000101

BID NO. 202409 CONTRACT ID NO. 24-0050-CIP

DECEMBER 2023

CITY COUNCIL

MAYOR
JOSH SCHROEDER

CITY COUNCIL MEMBERS

AMANDA PARR	DISTRICT 1
SHAWN HOOD	DISTRICT 2
MIKE TRIGGS	DISTRICT 3
RON GARLAND	DISTRICT 4
KEVIN PITTS	MAYOR PRO TEM / DISTRICT 5
JAKE FRENCH	DISTRICT 6
BEN STEWART	DISTRICT 7

CITY MANAGER
DAVID MORGAN

ASSISTANT CITY MANAGER
LAURIE BREWER
WAYNE NERO
NICK WOOLERY

WATER SERVICES UTILITY DIRECTOR
CHELSEA SOLOMON, P.E.

SYSTEMS ENGINEERING DIRECTOR
WESLEY WRIGHT, P.E.

UTILITY ENGINEER
DAVID MUNK, P.E.

N

LOCATION PLAN
NTS

CDM Smith
AUSTIN, TEXAS

CITY OF GEORGETOWN, CIP MANAGER — DATE 12-13-23

CITY OF GEORGETOWN, SYSTEM ENGINEERING DIRECTOR — For Wesley Wright — DATE 12/14/2023

CITY OF GEORGETOWN, WATER UTILITY DIRECTOR — DATE 12-14-23

STATE OF TEXAS
GERALD S. FURRIER
129811
LICENSED
PROFESSIONAL ENGINEER

PREPARED BY:

CDM Smith
TEXAS REGISTRATION NUMBER F-3043 — DATE 12/14/2023

Water ***Environment*** ***Transportation*** ***Energy*** ***Facilities***

SHEET INDEX

SL.NO.	SHEET NUMBER	SHEET TITLE
GENERAL		
1	G-0	COVER SHEET
2	G-1	SHEET INDEX
3	G-2	LEGEND AND NOTES
4	G-3	GENERAL NOTES AND ABBREVIATIONS
5	G-4	STANDARD TCEQ GENERAL CONSTRUCTION NOTES I
6	G-5	STANDARD TCEQ GENERAL CONSTRUCTION NOTES II
7	G-6	HORIZONTAL CONTROLS PLAN
8	G-7	CEDAR BREAKS LIFT STATION AREA CLASSIFICATION PLAN AND BUILDING MATERIALS OF CONSTRUCTION
9	G-8	D B WOOD LIFT STATION AREA CLASSIFICATION PLAN AND BUILDING MATERIALS OF CONSTRUCTION
CIVIL		
10	C-1	OVERALL SITE PLAN
11	C-2	CEDAR BREAKS LIFT STATION SITE PLAN
12	C-3	D B WOOD LIFT STATION SITE PLAN
13	C-4	CEDAR BREAKS LIFT STATION TEMPORARY AND PERMANENT EROSION AND SEDIMENTATION CONTROL PLAN
14	C-5	D B WOOD LIFT STATION TEMPORARY AND PERMANENT EROSION AND SEDIMENTATION CONTROL PLAN
15	C-6	CEDAR BREAKS LIFT STATION YARD PIPING PLAN
16	C-7	D B WOOD LIFT STATION YARD PIPING PLAN
17	C-8	CEDAR BREAKS LIFT STATION YARD PIPING PROFILE
18	C-9	D B WOOD LIFT STATION YARD PIPING PROFILE
19	C-10	CEDAR BREAKS LIFT STATION PAVING AND GRADING PLAN
20	C-11	D B WOOD LIFT STATION PAVING AND GRADING PLAN
21	C-12	D B WOOD LIFT STATION PAVING PLAN AND PROFILE
22	CD-1	CIVIL STANDARD DETAILS I
23	CD-2	CIVIL STANDARD DETAILS II
24	CD-3	CIVIL STANDARD DETAILS III
25	CD-4	CIVIL STANDARD DETAILS IV
26	CD-5	CIVIL STANDARD DETAILS V
27	CD-6	CIVIL STANDARD DETAILS VI
28	CD-7	CIVIL STANDARD DETAILS VII
29	CD-8	CIVIL STANDARD DETAILS VIII
30	CD-9	CIVIL STANDARD DETAILS IX
31	CD-10	VOID MITIGATION DETAILS
32	CD-11	TRAFFIC CONTROL DETAILS I
33	CD-12	TRAFFIC CONTROL DETAILS II
STRUCTURAL		
34	S-1	STRUCTURAL GENERAL NOTES, ABBREVIATIONS, AND LEGEND
35	S-2	STRUCTURAL SPECIAL INSPECTIONS
36	S-3	CEDAR BREAKS LIFT STATION FOUNDATION AND TOP PLANS
37	S-4	CEDAR BREAKS LIFT STATION SECTIONS
38	S-5	CEDAR BREAKS GENERATOR PAD PLAN AND SECTION
39	S-6	D B WOOD LIFT STATION FOUNDATION AND TOP PLANS
40	S-7	D B WOOD LIFT SECTION I
41	S-8	D B WOOD LIFT SECTIONS AND DETAIL
42	S-9	D B WOOD GENERATOR AND E-HOUSE PAD PLANS AND SECTIONS
43	SD-1	STRUCTURAL STANDARD DETAILS I
44	SD-2	STRUCTURAL STANDARD DETAILS II
45	SD-3	STRUCTURAL STANDARD DETAILS III
MECHANICAL		
46	M-1	MECHANICAL LEGEND
47	M-2	MECHANICAL CEDAR BREAKS LIFT STATION UPPER PLAN AND LOWER PLAN
48	M-3	MECHANICAL CEDAR BREAKS LIFT STATION SECTIONS
49	M-4	MECHANICAL D B WOOD LIFT STATION UPPER PLAN AND LOWER PLAN
50	M-5	MECHANICAL D B WOOD LIFT STATION SECTIONS
51	MD-1	MECHANICAL STANDARD DETAILS I
52	MD-2	MECHANICAL STANDARD DETAILS II
53	MD-3	MECHANICAL STATNDARD DETAILS III
ELECTRICAL		
54	E-1	ELECTRICAL SYMBOLS, LEGENDS AND ABBREVIATIONS I
55	E-2	ELECTRICAL SYMBOLS, LEGENDS AND ABBREVIATIONS II
56	E-3	CEDAR BREAKS AND D B WOOD AREA CLASSIFICATION PLAN
57	E-4	CEDAR BREAKS LIFT STATION ELECTRICAL SITE PLAN
58	E-5	D B WOOD LIFT STATION ELECTRICAL SITE PLAN
59	E-6	CEDAR BREAKS LIFT STATION MOTOR CONTROL CENTER MCC-CB ONE-LINE DIAGRAM AND ELEVATION
60	E-7	D B WOOD LIFT STATION MOTOR CONTROL CENTER MCC-DB ONE-LINE DIAGRAM AND ELEVATION
61	E-8	CEDAR BREAKS AND D B WOOD LIFT STATION PANEL BOARD AND LIGHT FIXTURE SCHEDULE
62	E-9	CEDAR BREAKS LIFT STATION ELECTRICAL SITE GROUNDING
63	E-10	CEDAR BREAKS LIFT STATION ELECTRICAL PLAN
64	E-11	D B WOOD LIFT STATION E-HOUSE AND GENERATOR POWER AND GROUNDING PLAN
65	E-12	D B LIFT STATION ELECTRICAL PLAN
66	E-13	CEDAR BREAKS LS SCHEMATIC I AND RISER DIAGRAM
67	E-14	CEDAR BREAKS LS SCHEMATIC II
68	E-15	CEDAR BREAKS LS SCHEMATIC III
69	E-16	D B WOOD LS SCHEMATIC I AND RISER DIAGRAM
70	E-17	D B WOOD LS SCHEMATIC II
71	E-18	D B WOOD LS SCHEMATIC III
72	E-19	CEDAR BREAKS EST EXISTING ELEVATION STORAGE TANK PLAN AND ELEVATION
73	EZ-1	ELECTRICAL STANDARD DETAILS I
74	EZ-2	ELECTRICAL STANDARD DETAILS II
INSTRUMENTATION		
75	I-1	INSTRUMENTATION LEGEND I NOTES AND ABBREVIATIONS
76	I-2	INSTRUMENTATION LEGEND II NOTES AND ABBREVIATIONS
77	I-3	SCADA SYSTEM ARCHITECTURE
78	I-4	CEDAR BREAKS LIFT STATION PROCESS AND INSTRUMENTATION DIAGRAM
79	I-5	D B WOOD LIFT STATION PROCESS AND INSTRUMENTATION DIAGRAM
80	IZ-1	INSTRUMENTATION INSTALLATION DETAILS I
81	IZ-2	INSTRUMENTATION INSTALLATION DETAILS II
82	IZ-3	INSTRUMENTATION INSTALLATION DETAILS III

STATE OF TEXAS
GERALD S. FURRIER
129811
LICENSED
PROFESSIONAL ENGINEER
12/11/2023

REV. NO.	DATE	DRWN	CHKD	REMARKS

DESIGNED BY: A. KAJALE
DRAWN BY: S. DHANGAR
SHEET CHK'D BY: M. MAHADEVAN
CROSS CHK'D BY: A. RHAMES
APPROVED BY: G. FURRIER
DATE: DECEMBER 2023

CDM Smith
8310-1 N Capital of Texas Hwy, Suite 250
Austin, TX 78731
Tel: (512) 346-1100
TBPELS Firm Registration No. F-3043

CITY OF GEORGETOWN, TEXAS

CEDAR BREAKS AND D B WOOD LIFT STATIONS

SHEET INDEX

PROJECT NO. 2048-272644
FILE NAME: G001INDX.dwg
SHEET NO.
G-1

xREFs: [REVW_STAMP, CDMS_2234_South lake to South fork_Border] Images: []
Last saved by: UZ2, Time: 12/14/2023 1:30:24 PM
C:\pw_pt\Uz2\3892778\G001INDX.dwg
© 2023 CDM SMITH ALL RIGHTS RESERVED.
REUSE OF DOCUMENTS: THESE DOCUMENTS AND DESIGNS PROVIDED BY PROFESSIONAL SERVICE, INCORPORATED HEREIN, ARE THE PROPERTY OF CDM SMITH AND ARE NOT TO BE USED, IN WHOLE OR PART, FOR ANY OTHER PROJECT WITHOUT THE WRITTEN AUTHORIZATION OF CDM SMITH.

Plotted: 12/14/2023 2:00:05 PM

LANDSCAPE & DRAINAGE SYMBOLS

SYMBOL	FEATURE
	BUILDING OR STRUCTURE FOOTPRINT
4" OAK	TREE, SIZE & TYPE
	TREE PROTECTION
	TREE TO BE REMOVED
	EDGE OF WOODS OR BRUSH
	DIRECTION OF FLOW FOR STORMWATER
SF SF	SILT FENCE
RB	ROCK BERM
	EROSION CONTROL BLANKET
SCE	STABILIZED CONSTRUCTION ENTRANCE

SURFACE ELEVATION SYMBOLS

SYMBOL	FEATURE
84	DEPRESSION CONTOUR
84	EXISTING INTERMEDIATE CONTOUR LINE & ELEVATION DESIGNATION
85	EXISTING INDEX CONTOUR LINE & ELEVATION DESIGNATION
84	PROPOSED INTERMEDIATE CONTOUR LINE & ELEVATION DESIGNATION
85	PROPOSED INDEX CONTOUR LINE & ELEVATION DESIGNATION
365.7	SPOT ELEVATION
	EXISTING EMBANKMENT (REVERSE SYMBOLS FOR CHANNEL)
	PROPOSED EMBANKMENT (REVERSE SYMBOLS FOR CHANNEL)

UNDERGROUND/OVERHEAD UTILITY SYMBOLS

SYMBOL	FEATURE
MH–14 WEST IE 27.35 EAST IE 32.50 / 8" WW	WASTEWATER & MANHOLE
MH–22 EAST IE 32.75 WEST IE 32.50 / 8" SD	STORM DRAIN & MANHOLE
W / FH	WATER LINE W/FIRE HYDRANT ASSEMBLY (INCLUDES VALVE)
ELEC	ELECTRICAL CABLE/DUCT
OE	OVERHEAD ELECTRIC
TEL	TELEPHONE
OT	OVERHEAD TELEPHONE
G	GAS LINE
LP	LIGHT POLE
PP GW	POWER POLE W/GUY WIRE

ITEMS TO BE REMOVED / ITEMS TO BE DEMOLISHED

TRAVELED WAY SYMBOLS

SYMBOL	FEATURE
	UNIMPROVED DIRT ROAD OR GRAVELED ROAD
	PAVED ROAD

EXISTING OR FUTURE CONDITION DESIGNATION

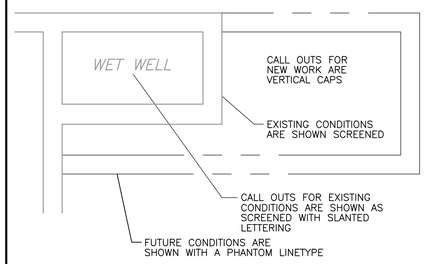

SECTION CUT SYMBOLS

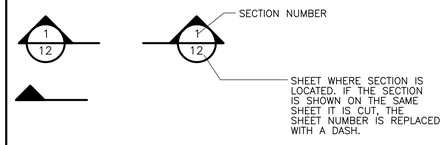

DETAIL CALL OUT SYMBOLS

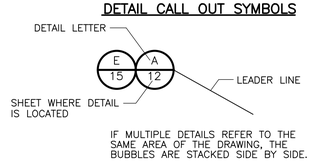

DRAWING, SECTION & DETAIL TITLES

SUBTITLE OR DESCRIPTION (AS REQ'D)

PLAN
1/4" = 1'–0"

SUBTITLE OR DESCRIPTION (AS REQ'D)

ELEVATION
1/4" = 1'–0"

SECTION 1 / 6 — 3/4" = 1'–0"
- SECTION NUMBER
- SHEET WHERE SECTION CUT IS TAKEN *

DETAIL A / 3 — 3/4" = 1'–0"
- DETAIL LETTER
- SHEET WHERE DETAIL IS TAKEN *

* IF SECTION, DETAIL, SCHEMATIC OR DIAGRAM IS DRAWN ON THE SAME SHEET THAT IT IS TAKEN FROM, THE SHEET NUMBER IS REPLACED WITH A HYPHEN. IF THE SECTION IS REFERENCED ON MULTIPLE SHEETS, THE SHEET NUMBER SHOWN INDICATES THE FIRST SHEET THE SECTION IS TAKEN FROM.

BOUNDARY & MARKER SYMBOLS

SYMBOL	FEATURE
	PROPERTY BOUNDARY
x x x	FENCE
	FENCECRETE
TCE	TEMPORARY CONSTRUCTION EASEMENT
PEL	PERMANENT EASEMENT LIMIT
B–7	BORING
BM 8	BENCHMARK

MB–2
- DISCIPLINE
- AREA CODE
- SEQUENTIAL SHEET NUMBER

G	GENERAL	D	STANDARD DETAILS
C	CIVIL		
E	ELECTRICAL		
M	PROCESS MECHANICAL		
S	STRUCTURAL		
H	HVAC		
A	ARCHITECTURAL		

GENERAL NOTES:

SAFETY

1. TRENCH SAFETY SHALL BE IN ACCORDANCE WITH OCCUPATIONAL SAFETY AND HEALTH ADMINISTRATION CFR 29, PART 1926–SAFETY REGULATIONS FOR CONSTRUCTION, SUBPART P – EXCAVATIONS AND THE STATE OF TEXAS. EXCAVATION ACTIVITIES SHALL NOT COMMENCE PRIOR TO SUBMITTAL OF THE TRENCH SAFETY PLAN PER SPECIFICATION S.I
2. COORDINATE AND PERFORM All WORK IN THE VICINITY OF HIGH VOLTAGE ELECTRIC POWER LINES IN ACCORDANCE WITH APPLICABLE TEXAS STATUES AND REQUIREMENTS OF THE ELECTRIC UTILITY OWNER.

NOTICES FOR JURISDICTIONAL AUTHORITIES:

1. NOTIFY CITY OF GEORGETOWN PROJECT MANAGER, MR. DANIEL HAVINS, 512–930–6513 AT LEAST 48 HOURS PRIOR TO THE BEGINNING OF CONSTRUCTION WORK.
2. OWNER, ENGINEER, AND CONTRACTOR SHALL ATTEND PRE–CONSTRUCTION CONFERENCE PRIOR TO THE START OF CONSTRUCTION. SCHEDULE THE PRE–CONSTRCUTION CONFERENCE AT LEAST 48–HOURS IN ADVANCE OF THE MEETING.
3. PORTIONS OF THE CONSTRUCTION OF THIS PROJECT WILL BE SUBJECT TO SUCH INSPECTION AND TESTS AS MAY BE DEEMED NECESSARY BY THE OWNER OR PERMIT GRANTING AUTHORITIES. FURNISH INFORMATION TO AUTHORITIES AS REQUIRED, AS WELL AS INCIDENTAL LABOR AND EQUIPMENT TO ALLOW TESTING PERSONNEL TO ACCESS THE WORK AND COOPERATE FULLY WITH THESE AUTHORITIES IN CONDUCTING THE TESTING AND INSPECTION PROGRAM. UNLESS STATED OTHERWISE IN THE PLANS OR PROJECT MANUAL, COSTS OF TESTING WILL BE AS SPECIFIED IN SECTION 00 70 00 – GENERAL CONDITIONS AND SECTION 01 41 00 –TESTING AND TESTING LABORATORY SERVICES.
4. NOTIFY THE AUTHORITY HAVING JURISDICTION PRIOR TO THE INSTALLATION OF ANY FACILITY WITHIN A DRAINAGE EASEMENT OR STREET R.O.W. THE METHODS OF PLACEMENT AND COMPACTION OF BACKFILL IN THE PUBLIC R.O.W. MUST BE APPROVED PRIOR TO START OF THE BACKFILL OPERATION.
   - A. CITY OF GEORGETOWN UTILITIES – 512–930–3555 OR 512–930–3640.
   - B. CITY OF GEORGETOWN STREETS AND TRANSPORTATION –512–930–8152.
   - C. CITY OF GEORGETOWN ELECTRIC ENGINEERING – 512–930–3555 OR 512–930–3640.
   - D. PEDERNALES ELECTRIC COOPERATIVE – 877–372–0391
   - E. FRONTIER – 512–869–2231
   - F. TEXAS ONE CALL – 811 OR 800–344–8377
5. ARRANGE OPERATIONS TO AVOID UNNECESSARY IMPACTS TO THE PUBLIC IN CONSTRUCTION AREAS.

PROTECTION OF EXISTING UTILITIES

1. THE INFORMATION SHOWN ON THE DRAWINGS INDICATING TYPE AND LOCATION OF UNDERGROUND, SURFACE, AND AERIAL UTILITIES IS NOT GUARANTEED TO BE EXACT OR COMPLETE. UTILITIES SHOWN REFLECT THE BEST INFORMATION AVAILABLE AT THE TIME THE PROJECT WAS DESIGNED/SURVEYED. DETERMINE THE EXACT TYPE AND LOCATION OF ALL UTILITIES AFFECTED BY CONSTRUCTION TO AVOID DAMAGING UTILITY. CONTACT THE "ONE CALL" SYSTEM AT 811 OR 1–800–545–6005 48 HOURS PRIOR TO BEGINNING ANY EXCAVATION AND SUBMIT ONE CALL CENTER CONFIRMATION NUMBER TO THE INSPECTOR.
2. CONTACT UTILITY OWNERS AND 811 "ONE CALL" SYSTEM TO PERFORM FIELD LOCATES OF UTILITIES 48 HOURS PRIOR TO BEGINNING ANY EXCAVATION.
3. IMMEDIATELY NOTIFY THE UTILITY OWNER OF DAMAGE TO UTILITIES. REPAIR OR CAUSE REPAIR OF DAMAGED UTILITIES AT NO ADDITIONAL COST TO THE OWNER.
4. EXPLORE AHEAD OF TRENCHING AND EXCAVATION WORK AND UNCOVER OBSTRUCTING UNDERGROUND FACILITIES SUFFICIENTLY TO DETERMINE THEIR LOCATION. NOTIFY THE OWNER AND ENGINEER IMMEDIATELY OF ANY POTENTIAL CONFLICT BETWEEN THE WORK AND ANY EXISTING UNDERGROUND FACILITIES.
5. NOTIFY THE INSPECTOR IMMEDIATELY IF AN EXISTING UTILITY IS IN CONFLICT WITH THE PROPOSED CONSTRUCTION. BEFORE DISCONNECTING ANY UTILITY SERVICE LINE, PROVIDE AN ALTERNATE MEANS OF SERVICE FOR THE INTERRUPTED SECTION. ANY DAMAGE RESULTING FROM BACKFLOW OF WASTEWATER SHALL BE REPAIRED AT NO ADDITIONAL COST TO THE OWNER.
6. REIMBURSE THE OWNER FOR ALL COSTS INCURRED AS A RESULT OF ANY DAMAGE TO OWNER'S EXISTING UTILITIES.
7. MAINTAIN ADEQUATE DRAINAGE CONDITIONS AT ALL TIMES IN ACCORDANCE WITH THE WILLIAMSON COUNTY AND THE CITY OF GEORGETOWN DRAINAGE CRITERIA MANUAL.

PROTECTION OF PRIVATE PROPERTY

1. PROVIDE AND MAINTAIN SAFETY FENCING ALONG THE RIGHT OF WAY (ROW) LINE BETWEEN ALL DRIVEWAYS ADJACENT TO THE CONSTRUCTION AREA. SAFETY FENCING IS REQUIRED ALONG ANY EXCAVATION AREAS, ANY CONSTRUCTION AREAS SPECIFICALLY IDENTIFIED ON THE PLANS, AND AREAS IDENTIFIED BY THE ENGINEER BASED ON SITE SPECIFIC CONDITIONS. PROVIDE SAFETY FENCING AROUND PERIMETER OF EXCAVATION ACTIVITIES WHEN LIVESTOCK IS PRESENT.
2. NO HUNTING, FISHING OR RECREATION OF ANY SORT IS ALLOWABLE WITHIN THE PROJECT PROPERTY.

TRAFFIC CONTROL AND PEDESTRIAN

1. ACCESS TO ALL SIDE STREETS AND DRIVEWAYS SHALL BE MAINTAINED AT ALL TIMES AT THE SOLE EXPENSE OF THE CONTRACTOR UNLESS OTHERWISE DIRECTED BY THE OWNER. COORDINATE WITH AFFECTED LANDOWNERS WHEN TEMPORARY DRIVEWAY ACCESS RESTRICTIONS ARE REQUIRED AND COORDINATE ALTERNATE MEANS OF INGRESS AND EGRESS AS REQUIRED.
2. FURNISH, INSTALL, AND MAINTAIN BARRICADES, WARNING SIGNS, FLASHERS AND OTHER TRAFFIC AND PEDESTRIAN CONTROL DEVICES OF THE TYPE AND SIZE AS INDICATED IN THE SUBMITTED TRAFFIC CONTROL PLANS. TRAFFIC CONTROL PLAN SHALL ADHERE TO THE REQUIREMENTS OF THE LATEST EDITION OF THE "TEXAS MANUAL ON UNIFORM TRAFFIC CONTROL DEVICES (MUTCD)."

CONSTRUCTION METHODS

1. MAINTAIN A SAFE, NEAT, AND ORDERLY JOB SITE AT ALL TIMES IN ACCORDANCE WITH SECTION 00700 – GENERAL CONDITIONS.
2. BURNING WITHIN THE PROJECT AREA WILL NOT BE ALLOWED.
3. CONTROLLED BLASTING WILL BE PERMITTED IF THE CONTRACTOR OBTAINS PERMIT FROM FEDERAL, STATE, OR LOCAL AGENCIES HAVING JURISDICTION.
4. PROTECT AND/OR RESTORE ALL SURFACES AND SUBSURFACE UTILITIES, BUILDINGS, STRUCTURES, AND OTHER FACILITIES ENCOUNTERED DURING CONSTRUCTION WHETHER OR NOT SHOWN ON THE DRAWINGS.
5. LIMIT CONSTRUCTION ACTIVITY, LAYDOWN, STORAGE, AND OTHER WORK TO WITHIN THE EASEMENT LIMITS, AND RESTORE ALL DAMAGED AREAS IN ACCORDANCE WITH THE SPECIFICATIONS.

TREE LIST

TREE#	TREE LIST	TREE DIAMETER (INCHES)	TREE TYPE	ACTION
310207	LO-39	39	LIVE OAK	PROTECT
310217	CE-16	16	CEDAR ELM	TO REMAIN
310219	LO-20	20	LIVE OAK	REMOVE
310220	CE-15	15	CEDAR ELM	REMOVE
310221	LO-15-14	23	LIVE OAK	REMOVE
310223	CE-12	12	CEDAR ELM	REMOVE
310226	PEC-21	21	PECAN	REMOVE
310232	PEC-28 -20	38	PECAN	PROTECT
310234	PEC-15 -12	21	PECAN	REMOVE
310245	LO -26	26	LIVE OAK	REMOVE
310260	CE-16	16	CEDAR ELM	TO REMAIN
310261	PO-18-18-16-13	41.5	POST OAK	PROTECT
310262	PO-17	17	POST OAK	TO REMAIN
310256	PO-22	22	POST OAK	TO REMAIN
310257	PO-17	17	POST OAK	TO REMAIN
310258	PO-15	15	POST OAK	TO REMAIN

STATE OF TEXAS
GERALD S. FURRIER
129811
LICENSED PROFESSIONAL ENGINEER
12/11/2023

REV. NO.	DATE	DRWN	CHKD	REMARKS
1	1/9/24	AK	GF	ADDENDUM 2

DESIGNED BY: A. KAJALE
DRAWN BY: S. DHANGAR
SHEET CHK'D BY: M. MAHADEVAN
CROSS CHK'D BY: A. RHAMES
APPROVED BY: G. FURRIER
DATE: DECEMBER 2023

CDM Smith
8310-1 N Capital of Texas Hwy, Suite 250
Austin, TX 78731
Tel: (512) 346-1100
TBPELS Firm Registration No. F-3043

CITY OF GEORGETOWN, TEXAS

CEDAR BREAKS AND D B WOOD LIFT STATIONS

LEGEND AND NOTES

PROJECT NO. 2048–272644
FILE NAME: G002NFLG.dwg
SHEET NO.
G-2

XREFs: [REV0_STAMP, CDMS_2234_South lake to South fork_Border] Images: []
Last saved by: KAJALEAN Time: 5/16/2024 11:59:47 AM
pw:\\cdmsmith-ac02-pw.bentley.com:pw_pl1\2048\272644\04 Design Services NM_50%\01 General\10 BIM_CADD\LIFT STATION\G002NFLG.dwg
©2023 CDM SMITH ALL RIGHTS RESERVED.
REUSE OF DOCUMENTS: THESE DOCUMENTS AND DESIGNS PROVIDED BY PROFESSIONAL SERVICE, INCORPORATED HEREIN, ARE THE PROPERTY OF CDM SMITH AND ARE NOT TO BE USED, IN WHOLE OR PART, FOR ANY OTHER PROJECT WITHOUT THE WRITTEN AUTHORIZATION OF CDM SMITH.

Plotted: 5/16/2024 12:04:28 PM

GENERAL NOTES:

PROTECTION OF SURFACE AND SURFACE RESTORATION

1. PROVIDE VIDEO IN ACCORDANCE WITH SPECIFICATION SECTION 13233 DOCUMENTING EXISTING ROADWAY CONDITION NO LESS THAN 200 FEET IN EACH DIRECTION OF CONSTRUCTION ACCESS DRIVEWAYS PRIOR TO BEGINNING OF THE WORK.
2. ALL DAMAGE CAUSED DIRECTLY OR INDIRECTLY TO STREET SURFACES, SIDEWALKS, DRIVEWAYS, CURB AND GUTTER SECTIONS, OR SUBSURFACES SHALL BE RESTORED IN ACCORDANCE WITH THE CONTRACT DOCUMENTS.
3. CUTS IN PAVEMENT SHALL BE SAW CUT IN STRAIGHT, NEAT LINES PARALLEL TO THE EXCAVATION OR UTILITY TRENCH AND TO THE NEXT EXISTING JOINT FOR SIDEWALKS AND CURB AND GUTTER.
4. ALL LAND CLEARING DEBRIS SHALL BE DISPOSED OF IN ACCORDANCE WITH THE DEBRIS DISPOSAL PLAN REQUIRED IN SPECIFICATION SECTION G4 – SITE CLEARING.
5. DURING EXCAVATION, TOPSOIL SHALL BE EXCAVATED AND ISOLATED FROM UNDERLYING SUBSOIL TO THEN BE RESTORED TO ITS ORIGINAL STRATUM DURING THE BACKFILLING PROCESS.
6. PROTECT SURVEY MONUMENTS AND REPLACE ANY SURVEY MONUMENTS DAMAGED OR MOVED AS A RESULT OF THE PROJECT. A TEXAS REGISTERED LAND SURVEYOR SHALL OVERSEE AND CERTIFY THE REPLACEMENT FOR ITS INTENDED USE AND NO SEPARATE PAY WILL BE PROVIDED.

DISPOSAL (OF DEBRIS AND EXCAVATED MATERIAL)

1. REMOVE DEBRIS FROM THE SITE AND DISPOSE IN AN APPROVED WASTE DISPOSAL SITE IN ACCORDANCE WITH SECTION 017419 CONSTRUCTION WASTE MANAGEMENT AND DISPOSAL.
2. REMOVE UNSUITABLE AND EXCESS EXCAVATED MATERIAL FROM THE SITE AND DISPOSE IN A PERMITTED DISPOSAL AREA IN ACCORDANCE WITH SECTION 312000 EARTHWORK.
3. DEBRIS OR EXCAVATED MATERIAL SHALL NOT BE DISPOSED OF IN ANY FLOODPLAIN, WETLAND, OR ENVIRONMENTALLY SENSITIVE AREA.

PROTECTION OF WATER FEATURES (DRAINAGE FEATURES OR CONTROL OF SURFACE WATER)

1. NO WORK SHALL BE PERFORMED IN STREAMS OR WITHIN 100 OR 500-YR FLOODPLAIN. WORK NEAR STREAM OR WETLANDS SHALL BE LIMITED TO THAT WHICH IS ESSENTIAL TO PERFORMANCE OF THE WORK.

STORAGE OF MATERIALS AND CONSTRUCTION EQUIPMENT

1. STORAGE AREAS FOR CONSTRUCTION EQUIPMENT, MATERIALS, AND STOCKPILES OF ANY TYPE WITHIN THE CONSTRUCTION LIMITS SHALL BE IN ACCORDANCE WITH SECTION 00700 GENERAL CONDITIONS.

ADMINISTRATIVE NOTES

1. A MEETING SHALL BE HELD ON-SITE WITH THE CONTRACTOR, DESIGN ENGINEER, AND CONSTRUCTION MANAGER AND/OR INSPECTOR AFTER INSTALLATION OF THE EROSION AND SEDIMENTATION CONTROLS AND TREE/NATURAL AREA PROTECTION MEASURES AND PRIOR TO BEGINNING ANY CLEARING, GRUBBING, OR EXCAVATION. THE CONTRACTOR SHALL NOTIFY THE OWNER AT LEAST THREE DAYS PRIOR TO THE MEETING DATE.
2. NO WORK SHALL BE PERFORMED ON SATURDAYS, SUNDAYS, OR CITY HOLIDAYS WITHOUT WRITTEN PERMISSION BY OWNER. THE SPECIFIED CONTRACT TIMES WERE ESTABLISHED ASSUMING NO WEEKEND OR HOLIDAY WORK. SATURDAYS, SUNDAYS, OR HOLIDAYS WILL BE COUNTED IN DETERMINING THE NUMBER OF CONSECUTIVE CALENDAR DAYS USED TO COMPLETE THE PROJECT. WORKING HOURS ARE LIMITED TO 7:00 AM TO 6:00 PM, MONDAY THROUGH FRIDAY.

DAILY SECURING OF THE SITE

1. INSTALL DEBRIS CAPS AS REQUIRED AFTER CONTRACTOR HAS SET UP BARRICADES WHEN CONSTRUCTION ACTIVITIES HAVE CEASED. DEBRIS CAPS MUST BE INSTALLED IN EXISTING VALVES PRIOR TO BEGINNING WORK AND IN NEW VALVES IMMEDIATELY FOLLOWING CONSTRUCTION.
2. STORE MATERIALS AND EQUIPMENT IN ACCORDANCE WITH SECTION 016000 – PRODUCT REQUIREMENTS.
3. SECURE ALL WORK, MATERIALS, EQUIPMENT, AND PROPERTY FROM LOSS, THEFT, DAMAGE, AND VANDALISM.
4. UNLESS OTHERWISE PERMITTED ON THE DRAWINGS OR BY THE ENGINEER, THE LIMITS OF THE EXCAVATION SHALL NOT ADVANCE BEYOND THE PIPE PLACEMENT SO THAT NO MORE THAN 200 LINEAR FEET OF TRENCH REMAINS OPEN AT THE END OF EACH DAY. SAFETY FENCING SHALL BE INSTALLED AROUND ALL OPEN EXCAVATION.
5. FURNISH AND INSTALL PROPER BARRIERS AND SIGNAGE AROUND EXCAVATION REMAINING OPEN OUTSIDE OF WORK HOURS IF WORK WILL RESUME WITHIN 24 HOURS. BACKFILL EXCAVATED AREAS IF NO WORK IS TO BE PERFORMED ON SITE FOR MORE THAN 24 HOURS.

TREE PROTECTION

1. IDENTIFY, MARK, AND PROTECT TREES AS IDENTIFIED IN THE DRAWINGS.
2. TREES NOT SHOWN TO BE REMOVED SHALL NOT BE REMOVED WITHOUT ENGINEER'S APPROVAL. TREES APPROVED BY THE ENGINEER TO BE TRIMMED, SHALL BE CUT USING PROPER TOOL AND THE TREE SHALL BE PROPERLY SEALED.

EROSION CONTROL

1. THE PLACEMENT OF EROSION AND SEDIMENTATION CONTROLS SHALL BE IN ACCORDANCE WITH THE APPROVED EROSION AND SEDIMENTATION CONTROL (ESC) PLAN. THE ESC PLAN SHALL BE AVAILABLE FOR REVIEW AT ALL TIMES AND USED AS THE BASIS FOR A TPDES REQUIRED SWPPP.
2. INSTALL EROSION AND SEDIMENTATION CONTROLS AND TREE/NATURAL AREA PROTECTIVE FENCING PRIOR TO ANY SITE PREPARATION WORK (CLEARING, GRUBBING, OR EXCAVATION).
3. WHEN REQUIRED, TEMPORARY EROSION CONTROL BLANKET SHALL BE 100% BIODEGRADABLE AND BE OF NET-FREE OR LOOSE WEAVE NET AND RE DESIGNED TO REDUCE POTENTIAL HAZARDS TO WILDLIFE.
4. REVISIONS TO THE EROSION AND SEDIMENT CONTROLS RESULTING IN VARIATION OF MATERIALS OR LOCATIONS OF CONTROLS SHALL BE APPROVED BY THE ENGINEER IN WRITING PRIOR TO EFFECTING SUCH CHANGES.
5. ALL DISTURBED AREAS SHALL BE RESTORED AND REVEGETATED PER SECTION G-7 LOAMING, HYDROSEEDING, AND PERMANENT EROSION CONTROL.

ENVIRONMENTAL, CULTURAL RESOURCES, AND HAZARDOUS WASTE

1. DO NOT ENGAGE IN ANY ACTIVITY THAT PURSUES, HUNTS, TAKES, CAPTURES, KILLS, POSSESSES, SELLS, PURCHASES, BARTERS, IMPORTS, EXPORTS OR TRANSPORTS ANY MIGRATORY BIRD OR ANY PART, NEST OR EGG OF SUCH BIRD.
2. IMMEDIATELY NOTIFY INSPECTOR IF ANY RARE OR ENDANGERED SPECIES, NATURAL PLANT COMMUNITY, OR SPECIAL FEATURE FOUND WITHIN THE SITE.
3. DO NOT ENGAGE IN ANY ACTIVITY THAT TAKES, HARMS OR HARASSES A STATE OR FEDERAL LISTED THREATENED OR ENDANGERED SPECIES. IF A STATE OR FEDERALLY THREATENED OR ENDANGERED SPECIES IS ENCOUNTERED DURING WORK, IMMEDIATELY CEASE WORK IN THE AREA OF THE ENCOUNTER AND NOTIFY THE INSPECTOR AND THE ENGINEER, WHO WILL DETERMINE AN APPROPRIATE COURSE OF ACTION. DO NOT RESUME WORK IN THE AREA OF THE ENCOUNTER UNTIL AUTHORIZED TO DO SO BY THE OWNER.
4. NO WILDLIFE SPECIES SHOULD BE PICKED UP, HANDLED, HARMED, OR KILLED UNLESS THE SAFETY OF WORKERS IS BEING COMPROMISED. AVOID WILDLIFE AND ALLOW TO ESCAPE FROM EQUIPMENT AND CONSTRUCTION AREA WHEN FEASIBLE. WHEN POSSIBLE, COORDINATE REMOVAL OF WILDLIFE WITH THE OWNERS'S ENVIRONMENTAL PROFESSIONAL.
5. MAINTAIN PEDESTRIAN ACCESS ACROSS ALL INTERSECTIONS WITH EXISTING PEDESTRIAN ACCESS. MAINTAINING PEDESTRIAN ACCESS WILL BE CONSIDERED SUBSIDIARY TO TRAFFIC CONTROL ITEMS.
6. IF CULTURAL RESOURCES ARE ENCOUNTERED DURING CONSTRUCTION (ARCHEOLOGICAL FINDINGS UNEARTHED) CONTRACTOR SHALL STOP WORK IN THAT AREA AND IMMEDIATELY CONTACT THE INSPECTOR AND THE TEXAS HISTORICAL COMMISSION AT (512) 463-6100.
7. ALL WORK MUST STOP IN THE AREA AND THE INSPECTOR MUST BE NOTIFIED IF A VOID IN THE ROCK SUBSTRATE IS DISCOVERED WHICH IS; ONE SQUARE FOOT OR LARGER IN TOTAL AREA: BLOWS AIR FROM WITHIN THE SUBSTRATE AND/OR CONSISTENTLY RECEIVES WATER DURING ANY RAIN EVENT.
8. THE CONTRACTOR SHALL CONFORM WITH TCEQ RULES REGARDING THE DISCOVERY AND MITIGATION OF KARST VOIDS DISCOVERED BY EXCAVATION. IF A VOID IS DISCOVERED, THE CONTRACTOR SHALL IMMEDIATELY CEASE WORK IN THE AREA AND CONTACT THE INSPECTOR TO ARRANGE AN ON-SITE INSPECTION.
9. THE CONTRACTOR SHALL IMMEDIATELY NOTIFY THE INSPECTOR OF ANY SUSPECTED HAZARDOUS MATERIALS ENCOUNTERED BEFORE OR DURING PERFORMANCE OF THE WORK AND SHALL TAKE ALL NECESSARY PRECAUTIONS TO AVOID FURTHER DISTURBANCE OF THE MATERIALS.
10. CLEARING IS NOT ALLOWED BETWEEN MARCH 1ST TO SEPTEMBER 1ST.

OTHER GENERAL NOTES

1. ~~NO BLASTING WILL BE PERMITTED.~~ (1)
2. CONTRACTOR SHALL USE TRENCH BOX OR VERTICAL SHORING FOR TRENCH PROTECTION WHEN EXCAVATION DEPTHS EXCEED 6-FEET.
3. ALL EXCAVATED AREAS WITHIN THE CITY OF GEORGETOWN RIGHT OF WAY SHALL BE BACKFILLED WITH LIKE MATERIALS AND TAMPED DOWN BY MEANS OF POUNDING OR COMPACTING IN 6" HORIZONTAL LAYERS TO A DENSITY EQUAL TO 98% OR AS SPECIFIED ON THE PLANS.
4. NOTIFY OWNER AND ENGINEER, IN WRITING, TWO WORKING DAYS IN ADVANCE, THAT THEY ARE PREPARED WITH ALL LABOR, MATERIALS, EQUIPMENT, AND NECESSARY PRELIMINARY WORK TO MAKE CONNECTIONS TO EXISTING PIPELINES. THE OWNER WILL ARRANGE TO OPERATE EXISTING VALVES AS NEEDED.
5. ALL PIPELINE MATERIALS AND INSTALLATION SHALL CONFORM TO THE PLANS AND SPECIFICATIONS, MANUFACTURER'S RECOMMENDATIONS, AND APPLICABLE DETAILS. NOT ALL PIPE FITTINGS OR APPURTENANCES MAY BE CALLED OUT OR SHOWN ON THE DRAWINGS BUT ARE REQUIRED TO BE PROVIDED BY THE CONTRACTOR. HORIZONTAL AND VERTICAL DEFLECTIONS OF THE PIPELINE SHALL BE OBTAINED BY DEFLECTION OF JOINTS, FABRICATED FITTINGS, OR A COMBINATION OF BOTH. JOINT DEFLECTIONS SHALL BE LIMITED TO 75% OF THE MANUFACTURER'S MAXIMUM ALLOWABLE DEFLECTION.
6. ALL WATER AND WASTEWATER MAINS SHALL BE INSTALLED IN ACCORDANCE WITH THE SEPARATION DISTANCES INDICATED IN CHAPTER 290 – DRINKING WATER STANDARDS AND CHAPTER 217 – DESIGN CRITERIA FOR SEWERAGE SYSTEMS OF TCEQ RULES.
7. PROVIDE ADAPTER FITTING AND THRUST RESTRAINT AT ALL CONNECTIONS TO EXISTING PIPING. FOR CONNECTIONS INVOLVING DISSIMILAR METALS (SUCH AS DUCTILE IRON AND STEEL), THE CONTRACTOR SHALL PROVIDE AN ISOLATION KIT AT PIPE CONNECTIONS TO INTERRUPT THE CONTINUITY OF ANY ELECTRICAL CURRENT.
8. COMPLETELY INSTALL AND PRESSURE TEST NEW PIPELINES IN ACCORDANCE WITH THE SPECIFICATIONS PRIOR TO MAKING PERMANENT CONNECTIONS TO EXISTING PIPELINE.
9. ELEVATIONS SHOWN ON THE PIPELINE PROFILES ARE INVERT (OR FLOWLINE) OF PIPE UNLESS OTHERWISE NOTED.
10. INSTALL COMBINATION AIR RELEASE-AIR VACUUM ASSEMBLIES AT ALL HIGH POINTS AND DRAIN VALVE ASSEMBLIES AT POINTS INDICATED IN THE PROPOSED PIPE ALIGNMENT.
11. PROVIDE VALVE BOXES FOR ALL BURIED VALVES PER THE PLANS AND SPECIFICATIONS. ADJUST ALL VALVE BOXES TO FINISHED GRADE UNLESS OTHERWISE SHOWN ORL DIRECTED.
12. UPON COMPLETION OF CONSTRUCTION, PROVIDE THE SIZE, LOCATION, AND ELEVATION OF ALL UTILITIES CROSSED AND SHALL REFLECT SUCH ON THE AS-BUILT DRAWINGS.
13. PREPARE AND FILE ALL DOCUMENTATION NECESSARY TO CONFIRM TO THE TEXAS COMMISSION ON ENVIRONMENTAL QUALITY (TCEQ) REGULATIONS REGARDING THE TEXAS POLLUTANT DISCHARGE ELIMINATION SYSTEM (TPDES). SAID DOCUMENTATION SHALL INCLUDE A STORMWATER POLLUTION PREVENTION PLAN (SWPPP) PREPARED PRIOR TO THE START OF CONSTRUCTION. A COPY OF SAID SWPPP SHALL BE PROVIDED TO THE OWNER PRIOR TO THE START OF CONSTRUCTION. STORMWATER MANAGEMENT SHALL COMPLY WITH ALL OTHER APPLICABLE CODES OR REGULATIONS.

THRUST RESTRAINT NOTES

1. THE THRUST RESTRAINT DISTANCES SHOWN INDICATE THE MINIMUM REQUIRED RESTRAINED LENGTHS FOR THE FINISHED INSTALLATION. ADDITIONAL RESTRAINTS ARE REQUIRED IF TEMPORARY PLUGS OR OTHER FITTINGS ARE USED FOR PIPELINE TESTING. NO SEPARATE PAY.
2. SEGMENTS OF PIPE IN VAULTS OR IN CASING PIPE DO NOT COUNT TOWARD THE REQUIRED RESTRAINED JOINT LENGTH.
3. ALL FITTINGS, VALVES, PIG-LAUNCH/CLEANOUTS, AND OTHER APPURTENANCES SHALL BE FULLY RESTRAINED.
4. THE END OF THE LINE SHALL BE RESTRAINED A MINIMUM DISTANCE EQUAL TO A DEAD END.
5. VALVE LOCATIONS SHALL BE RESTRAINED IN BOTH DIRECTIONS A MINIMUM DISTANCE EQUAL TO A DEAD END.
6. FOR ANY GIVEN PIPE MATERIAL THE CONTRACTOR MAY PROPOSE ALTERNATE RESTRAINED LENGTHS FOR THE ENGINEER'S CONSIDERATION BY FILING A WRITTEN REQUEST PREPARED BY THE PIPE MANUFACTURER AND SUPPORTED BY DETAILED CALCULATIONS PREPARED AND SEALED BY A LICENSED ENGINEER. ALL SUCH CALCULATIONS SHALL BE BASED ON THE APPLICABLE TEST PRESSURE AND A FACTOR OF SAFETY OF 2.0.

CONTRACTOR ACCESS NOTES

1. ANY UN-PAVED ROAD USED FOR CONSTRUCTION TRAFFIC, INCLUDING HAUL ROUTES, SHALL BE RESTORED TO PRE-CONSTRUCTION CONDITIONS OR BETTER FOLLOWING CONSTRUCTION.
2. CONTRACTOR SHALL REVIEW THE ENTIRE PROJECT AREA AND BECOME FAMILIAR WITH ACCESSIBILITY RESTRICTIONS. CONTRACTOR IS RESPONSIBLE FOR PROVIDING LABOR, EQUIPMENT AND MATERIALS NECESSARY TO ACCESS THE SITE.
3. ACCESS PLAN MODIFICATION MAY BE PERMITTED; HOWEVER, THE CONTRACTOR WILL BE ENTIRELY RESPONSIBLE FOR OBTAINING ALL APPLICABLE EASEMENTS, PERMITS, PERMISSIONS, AND/OR COSTS NECESSARY AND APPROVAL BY THE OWNER.
4. ALL PAVEMENT REPAIRS TO EXISTING PAVED ROADS AT CONSTRUCTION TRAFFIC ENTRY/EXIT POINTS TO THE PROJECT SITE TO RESTORE TO EQUAL OR BETTER CONDITIONS THAN EXISTED PRIOR TO CONSTRUCTION.
5. THE CONTRACTOR SHALL ASSUME FULL RESPONSIBILITY FOR SECURITY AND FOR JOB SITE CONDITIONS DURING CONSTRUCTION OF THIS PROJECT, INCLUDING THE SAFETY OF PERSONS AND PROPERTY. THIS REQUIREMENT SHALL APPLY CONTINUOUSLY AND NOT BE LIMITED TO NORMAL WORKING HOURS.

ABBREVIATIONS

ASTM	AMERICAN SOCIETY OF TESTING AND MATERIALS
ABAN	ABANDONED
AC	ASPHALTIC CONCRETE OR ASPHALT
AFG	ABOVE FINISHED GRADE
AHD	AHEAD
ALT	ALTERNATE
APPROX	APPROXIMATE
AR	AIR RELEASE VALVE
ASPH	ASPHALT
AVAR, AV/AR	AIR VACUUM RELIEF/ AIR RELEASE VALVE
AVE	AVENUE
BF	BLIND FLANGE
BFV	BUTTERFLY VALVE
BG	BELOW GRADE
BK	BACK
BLVD	BOULEVARD
BM	BENCHMARK
BO	BLOW OFF
CATV	CABLE TV
C	CIVIL
CAV	AIR VACUUM RELIEF/AIR RELEASE VALVE
℄	CENTERLINE
CB	CATCH BASIN
CL	CLASS, CENTERLINE
CLR	CLEARANCE
CML&C	CEMENT MORTAR LINED AND COATED
CML&T	CEMENT MORTAR LINED AND TAPE COATED
COMB	COMBINATION
CONC	CONCRETE
CONST	CONSTRUCTION
CONT	CONTINUOUS, CONTINUATION
COORD	COORDINATE
CP	CONTROL POINT
CPLG	COUPLING
DEF	DEFLECTION
DEMO	DEMOLISH/DEMOLITION
DEPT	DEPARTMENT
DET	DETAIL
DIA	DIAMETER
DI	DUCTILE IRON PIPE
DR	DIMENSION RATIO/DRAIN
DWG	DRAWING
E	EAST, EASTERLY, EASTING
EA	EACH
EG	EXIST GRADE
EF	EACH FACE
ELEC	ELECTRIC, ELECTRICAL
ELEV	ELEVATION, ELEVATED
ENGR	ENGINEER
EOP	EDGE OF PAVEMENT
EQ	EQUATION
ESMT	EASEMENT
EXIST, EX	EXISTING
EW	EACH WAY
FG	FINISHED GRADE
FH	FIRE HYDRANT
FLEX	FLEXIBLE
FLG	FLANGE
FPVC	FUSIBLE POLYVINYL CHLORIDE
FV	FIELD VERIFY
G	GAS
GA.	GAUGE
GALV	GALVANIZED
GPM	GALLONS PER MINUTE
GV	GATE VALVE
GV&B	GATE VALVE AND BOX
HDD	HORIZONTAL DIRECTIONAL DRILL
HGL	HYDRAULIC GRADE LINE
HORIZ	HORIZONTAL
HWY	HIGHWAY
IBC	INTERNATIONAL BUILDING CODE
ID	INSIDE DIAMETER
IE	INVERT ELEVATION
IN	INCHES
INT	INTERSECTION
INV	INVERT
L	LENGTH/LEFT
LB	POUND
LF	LINEAR FEET
LT	LEFT
MAX	MAXIMUM
MFR	MANUFACTURER
MH	MANHOLE
MIN	MINIMUM
MJ	MECHANICAL JOINT
MSL	MEAN SEA LEVEL
N	NORTH, NORTHERLY, NORTHING
NAD83	NORTH AMERICAN DATUM 1983
NIC	NOT IN CONTRACT
NO	NUMBER
NPDES	NATIONAL POLLUTANT DISCHARGE ELIMINATION SYSTEM
NTS	NOT TO SCALE
OD	OUTSIDE DIAMETER
O/C	ON CENTER
OFF	OFFSET
OH	OVERHEAD
OHE	OVERHEAD ELECTRIC
OSHA	OCCUPATIONAL SAFETY AND HEALTH ADMINISTRATION
OT	OVERHEAD TELEPHONE
OTV	OVERHEAD TV
PB	PULL BOX
PC	POINT OF CURVATURE
PE	POLYETHYLENE, PLAIN END
PH	POT HOLE
PI	POINT OF INTERSECTION
PL	PROPERTY LINE
PP	POWER POLE
PSI	POUNDS PER SQUARE INCH
PT	POINT OF TANGENCY
PVC	POLYVINYL CHLORIDE
PVMT	PAVEMENT
PW	PUMP WELL
R	RADIUS
RED	REDUCER
RD	ROAD
R/RT	RIGHT
R/W	RIGHT OF WAY
R&R	REMOVE AND RECONSTRUCT
REF	REFERENCE
REQ'D	REQUIRED
REST'D	RESTRAINED
RJ	RESTRAINED JOINT
RR	RAILROAD
RT	RIGHT
S	SLOPE OR SOUTH
SCP	SURVEY CONTROL POINT
SCH	SCHEDULE
SD	STORM DRAIN
SF	SQUARE FEET
SHT	SHEET
SIM	SIMILAR
SPECS	SPECIFICATIONS
SQ	SQUARE
SS	STAINLESS STEEL, SANITARY SEWER
SSPWC	STANDARD SPECIFICATIONS FOR PUBLIC WORKS CONSTRUCTION
ST	STREET
STD	STANDARD
STA	STATION
STL	STEEL
T&B	TOP AND BOTTOM
TEL	TELEPHONE
TEMP	TEMPORARY
TOB	TOP OF BERM/BANK
TOC	TOP OF CONCRETE
TOW	TOP OF WALL
TXDOT	TEXAS DEPARTMENT OF TRANSPORTATION
TYP	TYPICAL
UGND	UNDERGROUND
UNK	UNKNOWN
UNO	UNLESS NOTED OTHERWISE
US/USA	UNITED STATES/ UNITED STATES OF AMERICA, UNDERGROUND SERVICES ALERT
USC&GS	UNITED STATES COAST AND GEODETIC SURVEY
UTIL	UTILITY
VERT	VERTICAL
W	WATER/WEST/WIDE
W/	WITH
WATCH	WORK AREA TRAFFIC CONTROL HANDBOOK
WCID	WATER CONTROL AND IMPROVEMENTS DISTRICT
WM	WATER MAIN
WS	WELDED STEEL
WT	WEIGHT
WTR	WATER
WV	WATER VALVE
Ø	DIAMETER
@	AT
Δ	DELTA

STATE OF TEXAS
GERALD S. FURRIER
129811
LICENSED PROFESSIONAL ENGINEER
12/11/2023

REV. NO.	DATE	DRWN	CHKD	REMARKS
1	1/9/24	AK	GF	NOTE DELETED.

DESIGNED BY: A. KAJALE
DRAWN BY: S. DHANGAR
SHEET CHK'D BY: M. MAHADEVAN
CROSS CHK'D BY: A. RHAMES
APPROVED BY: G. FURRIER
DATE: DECEMBER 2023

CDM Smith
8310-1 N Capital of Texas Hwy, Suite 250
Austin, TX 78731
Tel: (512) 346-1100
TBPELS Firm Registration No. F-3043

CITY OF GEORGETOWN, TEXAS

CEDAR BREAKS AND D B WOOD LIFT STATIONS

GENERAL NOTES AND ABBREVIATIONS

PROJECT NO. 2048-272644
FILE NAME: G003NFGN.dwg
SHEET NO. G-3

Plotted: 5/16/2024 11:59:11 AM

XREFs: [REVW_G-FURRIER, CDMS_2234] Images: []
Last saved by: KULKARNIMV Time: 12/6/2022 1:50:35 PM
pw:\\cdmsmith-oz02-pw.bentley.com:pw_01\67698\215047\10 Transportation\04 Client Folder Structure\215047 Heros Tunnel\Highway_Ops_eng_data\G002ABBR.dwg

©2023 CDM SMITH ALL RIGHTS RESERVED.
REUSE OF DOCUMENTS: THESE DOCUMENTS AND DESIGNS PROVIDED BY PROFESSIONAL SERVICE, INCORPORATED HEREIN, ARE THE PROPERTY OF CDM SMITH AND ARE NOT TO BE USED, IN WHOLE OR PART, FOR ANY OTHER PROJECT WITHOUT THE WRITTEN AUTHORIZATION OF CDM SMITH.

TEXAS COMMISSION ON ENVIRONMENTAL QUALITY ORGANIZED SEWAGE COLLECTION SYSTEM GENERAL CONSTRUCTION NOTES

1. THIS ORGANIZED SEWAGE COLLECTION SYSTEM MUST BE DESIGNED AND CONSTRUCTED IN ACCORDANCE WITH THE TEXAS COMMISSION ON ENVIRONMENTAL QUALITY'S (TCEQ) EDWARDS AQUIFER RULES 30 TEXAS ADMINISTRATIVE CODE (TAC) §§213.5(C) AND 217.51 –217.70 AND 30 TAC CHAPTER 217, SUBCHAPTER D, AND THE CITY OF GEORGETOWN STANDARD SPECIFICATIONS.

2. ALL CONTRACTORS CONDUCTING REGULATED ACTIVITIES ASSOCIATED WITH THIS PROPOSED REGULATED PROJECT MUST BE PROVIDED WITH COPIES OF THE SEWAGE COLLECTION SYSTEM PLAN AND THE TCEQ LETTER INDICATING THE SPECIFIC CONDITIONS OF ITS APPROVAL. DURING THE COURSE OF THESE REGULATED ACTIVITIES, THE CONTRACTORS MUST BE REQUIRED TO KEEP ON–SITE COPIES OF THE PLAN AND THE APPROVAL LETTER.

3. NO LATER THAN 48 HOURS PRIOR TO COMMENCING ANY REGULATED ACTIVITY, THE APPLICANT OR HIS AGENT MUST NOTIFY THE AUSTIN REGIONAL OFFICE, IN WRITING, OF THE DATE ON WHICH THE REGULATED ACTIVITY WILL BEGIN.

4. ANY MODIFICATION TO THE ACTIVITIES DESCRIBED IN THE REFERENCED SCS APPLICATION FOLLOWING THE DATE OF APPROVAL MAY REQUIRE THE SUBMITTAL OF AN SCS APPLICATION TO MODIFY THIS APPROVAL, INCLUDING THE PAYMENT OF APPROPRIATE FEES AND ALL INFORMATION NECESSARY FOR ITS REVIEW AND APPROVAL.

5. ALL TEMPORARY EROSION AND SEDIMENTATION CONTROLS MUST BE INSTALLED PRIOR TO CONSTRUCTION, MUST BE MAINTAINED DURING CONSTRUCTION, AND MUST BE REMOVED WHEN SUFFICIENT VEGETATION IS ESTABLISHED TO CONTROL THE EROSION AND SEDIMENTATION AND THE CONSTRUCTION AREA IS STABILIZED.

6. IF ANY SENSITIVE FEATURES ARE DISCOVERED DURING THE WASTEWATER LINE TRENCHING ACTIVITIES, ALL REGULATED ACTIVITIES NEAR THE SENSITIVE FEATURE MUST BE SUSPENDED IMMEDIATELY. THE APPLICANT MUST IMMEDIATELY NOTIFY THE APPROPRIATE REGIONAL OFFICE OF THE TEXAS COMMISSION ON ENVIRONMENTAL QUALITY OF THE FEATURE DISCOVERED. A GEOLOGIST'S ASSESSMENT OF THE LOCATION AND EXTENT OF THE FEATURE DISCOVERED MUST BE REPORTED TO THAT REGIONAL OFFICE IN WRITING WITHIN TWO WORKING DAYS. THE APPLICANT MUST SUBMIT A PLAN FOR ENSURING THE STRUCTURAL INTEGRITY OF THE SEWER LINE OR FOR MODIFYING THE PROPOSED COLLECTION SYSTEM ALIGNMENT AROUND THE FEATURE. THE REGULATED ACTIVITIES NEAR THE SENSITIVE FEATURE MAY NOT PROCEED UNTIL THE EXECUTIVE DIRECTOR HAS REVIEWED AND APPROVED THE METHODS PROPOSED TO PROTECT THE SENSITIVE FEATURE AND THE EDWARDS AQUIFER FROM ANY POTENTIALLY ADVERSE IMPACTS TO WATER QUALITY WHILE MAINTAINING THE STRUCTURAL INTEGRITY OF THE LINE.

7. SEWER LINES LOCATED WITHIN OR CROSSING THE 5–YEAR FLOODPLAIN OF A DRAINAGE WAY WILL BE PROTECTED FROM INUNDATION AND STREAM VELOCITIES WHICH COULD CAUSE EROSION AND SCOURING OF BACKFILL. THE TRENCH MUST BE CAPPED WITH CONCRETE TO PREVENT SCOURING OF BACKFILL, OR THE SEWER LINES MUST BE ENCASED IN CONCRETE. ALL CONCRETE SHALL HAVE A MINIMUM THICKNESS OF SIX (6) INCHES.

8. BLASTING PROCEDURES FOR PROTECTION OF EXISTING SEWER LINES AND OTHER UTILITIES WILL BE IN ACCORDANCE WITH THE NATIONAL FIRE PROTECTION ASSOCIATION CRITERIA. SAND IS NOT ALLOWED AS BEDDING OR BACKFILL IN TRENCHES THAT HAVE BEEN BLASTED. IF ANY EXISTING SEWER LINES ARE DAMAGED, THE LINES MUST BE REPAIRED AND RETESTED.

9. ALL MANHOLES CONSTRUCTED OR REHABILITATED ON THIS PROJECT MUST HAVE WATERTIGHT SIZE ON SIZE RESILIENT CONNECTORS ALLOWING FOR DIFFERENTIAL SETTLEMENT. IF MANHOLES ARE CONSTRUCTED WITHIN THE 100–YEAR FLOODPLAIN, THE COVER MUST HAVE A GASKET AND BE BOLTED TO THE RING. WHERE GASKETED MANHOLE COVERS ARE REQUIRED FOR MORE THAN THREE MANHOLES IN SEQUENCE OR FOR MORE THAN 1500 FEET, ALTERNATE MEANS OF VENTING WILL BE PROVIDED. BRICKS ARE NOT AN ACCEPTABLE CONSTRUCTION MATERIAL FOR ANY PORTION OF THE MANHOLE.

   THE DIAMETER OF THE MANHOLES MUST BE A MINIMUM OF FOUR FEET AND THE MANHOLE FOR ENTRY MUST HAVE A MINIMUM CLEAR OPENING DIAMETER OF 30 INCHES. THESE DIMENSIONS AND OTHER DETAILS SHOWING COMPLIANCE WITH THE COMMISSION'S RULES CONCERNING MANHOLES AND SEWER LINE/MANHOLE INVERTS DESCRIBED IN 30 TAC §217.55 ARE INCLUDED ON PLAN SHEET –– OF ––.

   IT IS SUGGESTED THAT ENTRANCE INTO MANHOLES IN EXCESS OF FOUR FEET DEEP BE ACCOMPLISHED BY MEANS OF A PORTABLE LADDER. THE INCLUSION OF STEPS IN A MANHOLE IS PROHIBITED.

11. WHERE WATER LINES AND NEW SEWER LINE ARE INSTALLED WITH A SEPARATION DISTANCE CLOSER THAN NINE FEET (I.E., WATER LINES CROSSING WASTEWATER LINES, WATER LINES PARALLELING WASTEWATER LINES, OR WATER LINES NEXT TO MANHOLES) THE INSTALLATION MUST MEET THE REQUIREMENTS OF 30 TAC §217.53(D) (PIPE DESIGN) AND 30 TAC §290.44(E) (WATER DISTRIBUTION).

12. WHERE SEWERS LINES DEVIATE FROM STRAIGHT ALIGNMENT AND UNIFORM GRADE ALL CURVATURE OF SEWER PIPE MUST BE ACHIEVED BY THE FOLLOWING PROCEDURE WHICH IS RECOMMENDED BY THE PIPE MANUFACTURER:

    IF PIPE FLEXURE IS PROPOSED, THE FOLLOWING METHOD OF PREVENTING DEFLECTION OF THE JOINT MUST BE USED:

    SPECIFIC CARE MUST BE TAKEN TO ENSURE THAT THE JOINT IS PLACED IN THE CENTER OF THE TRENCH AND PROPERLY BEDDED IN ACCORDANCE WITH 30 TAC §217.54.

13. NEW SEWAGE COLLECTION SYSTEM LINES MUST BE CONSTRUCTED WITH STUB OUTS FOR THE CONNECTION OF ANTICIPATED EXTENSIONS. THE LOCATION OF SUCH STUB OUTS MUST BE MARKED ON THE GROUND SUCH THAT THEIR LOCATION CAN BE EASILY DETERMINED AT THE TIME OF CONNECTION OF THE EXTENSIONS. SUCH STUB OUTS MUST BE MANUFACTURED WYES OR TEES THAT ARE COMPATIBLE IN SIZE AND MATERIAL WITH BOTH THE SEWER LINE AND THE EXTENSION. AT THE TIME OF ORIGINAL CONSTRUCTION, NEW STUB–OUTS MUST BE CONSTRUCTED SUFFICIENTLY TO EXTEND BEYOND THE END OF THE STREET PAVEMENT. ALL STUB–OUTS MUST BE SEALED WITH A MANUFACTURED CAP TO PREVENT LEAKAGE. EXTENSIONS THAT WERE NOT ANTICIPATED AT THE TIME OF ORIGINAL CONSTRUCTION OR THAT ARE TO BE CONNECTED TO AN EXISTING SEWER LINE NOT FURNISHED WITH STUB OUTS MUST BE CONNECTED USING A MANUFACTURED SADDLE AND IN ACCORDANCE WITH ACCEPTED PLUMBING TECHNIQUES.

14. TRENCHING, BEDDING AND BACKFILL MUST CONFORM WITH 30 TAC §217.54. THE BEDDING AND BACKFILL FOR FLEXIBLE PIPE MUST COMPLY WITH THE STANDARDS OF ASTM D–2321, CLASSES IA, IB, II OR III. RIGID PIPE BEDDING MUST COMPLY WITH THE REQUIREMENTS OF ASTM C 12 (ANSI A 106.2) CLASSES A, B OR C.

15. SEWER LINES MUST BE TESTED FROM MANHOLE TO MANHOLE. WHEN A NEW SEWER LINE IS CONNECTED TO AN EXISTING STUB OR CLEAN–OUT, IT MUST BE TESTED FROM EXISTING MANHOLE TO NEW MANHOLE. IF A STUB OR CLEAN–OUT IS USED AT THE END OF THE PROPOSED SEWER LINE, NO PRIVATE SERVICE ATTACHMENTS MAY BE CONNECTED BETWEEN THE LAST MANHOLE AND THE CLEANOUT UNLESS IT CAN BE CERTIFIED AS CONFORMING WITH THE PROVISIONS OF 30 TAC §213.5(C)(3)(E).

16. ALL SEWER LINES MUST BE TESTED IN ACCORDANCE WITH 30 TAC §217.57. THE ENGINEER MUST RETAIN COPIES OF ALL TEST RESULTS WHICH MUST BE MADE AVAILABLE TO THE EXECUTIVE DIRECTOR UPON REQUEST. THE ENGINEER MUST CERTIFY IN WRITING THAT ALL WASTEWATER LINES HAVE PASSED ALL REQUIRED TESTING TO THE APPROPRIATE REGIONAL OFFICE WITHIN 30 DAYS OF TEST COMPLETION AND PRIOR TO USE OF THE NEW COLLECTION SYSTEM. TESTING METHOD WILL BE:

    (A) FOR A COLLECTION SYSTEM PIPE THAT WILL TRANSPORT WASTEWATER BY GRAVITY FLOW, THE DESIGN MUST SPECIFY AN INFILTRATION AND EXFILTRATION TEST OR A LOW–PRESSURE AIR TEST. A TEST MUST CONFORM TO THE FOLLOWING REQUIREMENTS:

    (1) LOW PRESSURE AIR TEST.

    (A) A LOW PRESSURE AIR TEST MUST FOLLOW THE PROCEDURES DESCRIBED IN AMERICAN SOCIETY FOR TESTING AND MATERIALS (ASTM) C–828, ASTM C–924, OR ASTM F–1417 OR OTHER PROCEDURE APPROVED BY THE EXECUTIVE DIRECTOR, EXCEPT AS TO TESTING TIMES AS REQUIRED IN TABLE C.3 IN SUBPARAGRAPH (C) OF THIS PARAGRAPH OR EQUATION C.3 IN SUBPARAGRAPH (B)(II) OF THIS PARAGRAPH.

    (B) FOR SECTIONS OF COLLECTION SYSTEM PIPE LESS THAN 36 INCH AVERAGE INSIDE DIAMETER, THE FOLLOWING PROCEDURE MUST APPLY, UNLESS A PIPE IS TO BE TESTED AS REQUIRED BY PARAGRAPH (2) OF THIS SUBSECTION.

        (I) A PIPE MUST BE PRESSURIZED TO 3.5 POUNDS PER SQUARE INCH (PSI) GREATER THAN THE PRESSURE EXERTED BY GROUNDWATER ABOVE THE PIPE.

        (II) ONCE THE PRESSURE IS STABILIZED, THE MINIMUM TIME ALLOWABLE FOR THE PRESSURE TO DROP FROM 3.5 PSI GAUGE TO 2.5 PSI GAUGE IS COMPUTED FROM THE FOLLOWING EQUATION:

        EQUATION C.3

        WHERE: $T = \frac{0.085 x D x K}{Q}$

        T = TIME FOR PRESSURE TO DROP 1.0 POUND PER SQUARE INCH GAUGE IN SECONDS
        K = 0.000419 X D X L, BUT NOT LESS THAN 1.0
        D = AVERAGE INSIDE PIPE DIAMETER IN INCHES
        L = LENGTH OF LINE OF SAME SIZE BEING TESTED, IN FEET
        Q = RATE OF LOSS, 0.0015 CUBIC FEET PER MINUTE PER SQUARE FOOT INTERNAL SURFACE

    (C) SINCE A K VALUE OF LESS THAN 1.0 MAY NOT BE USED, THE MINIMUM TESTING TIME FOR EACH PIPE DIAMETER IS SHOWN IN THE FOLLOWING TABLE C.3:

PIPE DIAMETER (INCHES)	MINIMUM TIME (SECONDS)	MAXIMUM LENGTH FOR MINIMUM TIME (FEET)	TIME FOR LONGER LENGTH (SECONDS/FOOT)
6	340	398	0.855
8	454	298	1.520
10	567	239	2.374
12	680	199	3.419
15	850	159	5.342
18	1020	133	7.693
21	1190	114	10.471
24	1360	100	13.676
27	1530	88	17.309
30	1700	80	21.369
33	1870	72	25.856

    (D) AN OWNER MAY STOP A TEST IF NO PRESSURE LOSS HAS OCCURRED DURING THE FIRST 25% OF THE CALCULATED TESTING TIME.

    (E) IF ANY PRESSURE LOSS OR LEAKAGE HAS OCCURRED DURING THE FIRST 25% OF A TESTING PERIOD, THEN THE TEST MUST CONTINUE FOR THE ENTIRE TEST DURATION AS OUTLINED ABOVE OR UNTIL FAILURE.

    (F) WASTEWATER COLLECTION SYSTEM PIPES WITH A 27 INCH OR LARGER AVERAGE INSIDE DIAMETER MAY BE AIR TESTED AT EACH JOINT INSTEAD OF FOLLOWING THE PROCEDURE OUTLINED IN THIS SECTION.

    (G) A TESTING PROCEDURE FOR PIPE WITH AN INSIDE DIAMETER GREATER THAN 33 INCHES MUST BE APPROVED BY THE EXECUTIVE DIRECTOR.

    (2) INFILTRATION/EXFILTRATION TEST.

    (A) THE TOTAL EXFILTRATION, AS DETERMINED BY A HYDROSTATIC HEAD TEST, MUST NOT EXCEED 50 GALLONS PER INCH OF DIAMETER PER MILE OF PIPE PER 24 HOURS AT A MINIMUM TEST HEAD OF 2.0 FEET ABOVE THE CROWN OF A PIPE AT AN UPSTREAM MANHOLE.

    (B) AN OWNER SHALL USE AN INFILTRATION TEST IN LIEU OF AN EXFILTRATION TEST WHEN PIPES ARE INSTALLED BELOW THE GROUNDWATER LEVEL.

    (C) THE TOTAL EXFILTRATION, AS DETERMINED BY A HYDROSTATIC HEAD TEST, MUST NOT EXCEED 50 GALLONS PER INCH DIAMETER PER MILE OF PIPE PER 24 HOURS AT A MINIMUM TEST HEAD OF TWO FEET ABOVE THE CROWN OF A PIPE AT AN UPSTREAM MANHOLE, OR AT LEAST TWO FEET ABOVE EXISTING GROUNDWATER LEVEL, WHICHEVER IS GREATER.

    (D) FOR CONSTRUCTION WITHIN A 25–YEAR FLOOD PLAIN, THE INFILTRATION OR EXFILTRATION MUST NOT EXCEED 10 GALLONS PER INCH DIAMETER PER MILE OF PIPE PER 24 HOURS AT THE SAME MINIMUM TEST HEAD AS IN SUBPARAGRAPH (C) OF THIS PARAGRAPH.

    (E) IF THE QUANTITY OF INFILTRATION OR EXFILTRATION EXCEEDS THE MAXIMUM QUANTITY SPECIFIED, AN OWNER SHALL UNDERTAKE REMEDIAL ACTION IN ORDER TO REDUCE THE INFILTRATION OR EXFILTRATION TO AN AMOUNT WITHIN THE LIMITS SPECIFIED. AN OWNER SHALL RETEST A PIPE FOLLOWING A REMEDIATION ACTION.

    (B) IF A GRAVITY COLLECTION PIPE IS COMPOSED OF FLEXIBLE PIPE, DEFLECTION TESTING IS ALSO REQUIRED. THE FOLLOWING PROCEDURES MUST BE FOLLOWED:

    (1) FOR A COLLECTION PIPE WITH INSIDE DIAMETER LESS THAN 27 INCHES, DEFLECTION MEASUREMENT REQUIRES A RIGID MANDREL.

        (A) MANDREL SIZING.
            (I) A RIGID MANDREL MUST HAVE AN OUTSIDE DIAMETER (OD) NOT LESS THAN 95% OF THE BASE INSIDE DIAMETER (ID) OR AVERAGE ID OF A PIPE, AS SPECIFIED IN THE APPROPRIATE STANDARD BY THE ASTMS, AMERICAN WATER WORKS ASSOCIATION, UNI–BELL, OR AMERICAN NATIONAL STANDARDS INSTITUTE, OR ANY RELATED APPENDIX.

            (II) IF A MANDREL SIZING DIAMETER IS NOT SPECIFIED IN THE APPROPRIATE STANDARD, THE MANDREL MUST HAVE AN OD EQUAL TO 95% OF THE ID OF A PIPE. IN THIS CASE, THE ID OF THE PIPE, FOR THE PURPOSE OF DETERMINING THE OD OF THE MANDREL, MUST EQUAL BE THE AVERAGE OUTSIDE DIAMETER MINUS TWO MINIMUM WALL THICKNESSES FOR OD CONTROLLED PIPE AND THE AVERAGE INSIDE DIAMETER FOR ID CONTROLLED PIPE.

            (III) ALL DIMENSIONS MUST MEET THE APPROPRIATE STANDARD.

        (B) MANDREL DESIGN.
            (I) A RIGID MANDREL MUST BE CONSTRUCTED OF A METAL OR A RIGID PLASTIC MATERIAL THAT CAN WITHSTAND 200 PSI WITHOUT BEING DEFORMED.

            (II) A MANDREL MUST HAVE NINE OR MORE ODD NUMBER OF RUNNERS OR LEGS.

            (III) A BARREL SECTION LENGTH MUST EQUAL AT LEAST 75% OF THE INSIDE DIAMETER OF A PIPE.

            (IV) EACH SIZE MANDREL MUST USE A SEPARATE PROVING RING.

        (C) METHOD OPTIONS.
            (I) AN ADJUSTABLE OR FLEXIBLE MANDREL IS PROHIBITED.

            (II) A TEST MAY NOT USE TELEVISION INSPECTION AS A SUBSTITUTE FOR A DEFLECTION TEST.

            (III) IF REQUESTED, THE EXECUTIVE DIRECTOR MAY APPROVE THE USE OF A DEFLECTOMETER OR A MANDREL WITH REMOVABLE LEGS OR RUNNERS ON A CASE–BY–CASE BASIS.

    (2) FOR A GRAVITY COLLECTION SYSTEM PIPE WITH AN INSIDE DIAMETER 27 INCHES AND GREATER, OTHER TEST METHODS MAY BE USED TO DETERMINE VERTICAL DEFLECTION.

    (3) A DEFLECTION TEST METHOD MUST BE ACCURATE TO WITHIN PLUS OR MINUS 0.2% DEFLECTION.

    (4) AN OWNER SHALL NOT CONDUCT A DEFLECTION TEST UNTIL AT LEAST 30 DAYS AFTER THE FINAL BACKFILL.

    (5) GRAVITY COLLECTION SYSTEM PIPE DEFLECTION MUST NOT EXCEED FIVE PERCENT (5%).

    (6) IF A PIPE SECTION FAILS A DEFLECTION TEST, AN OWNER SHALL CORRECT THE PROBLEM AND CONDUCT A SECOND TEST AFTER THE FINAL BACKFILL HAS BEEN IN PLACE AT LEAST 30 DAYS.

17. ALL MANHOLES MUST BE TESTED TO MEET OR EXCEED THE REQUIREMENTS OF 30 TAC §217.58.
    (A) ALL MANHOLES MUST PASS A LEAKAGE TEST.

    (B) AN OWNER SHALL TEST EACH MANHOLE (AFTER ASSEMBLY AND BACKFILLING) FOR LEAKAGE, SEPARATE AND INDEPENDENT OF THE COLLECTION SYSTEM PIPES, BY HYDROSTATIC EXFILTRATION TESTING, VACUUM TESTING, OR OTHER METHOD APPROVED BY THE EXECUTIVE DIRECTOR.

    (1) HYDROSTATIC TESTING.
        (A) THE MAXIMUM LEAKAGE FOR HYDROSTATIC TESTING OR ANY ALTERNATIVE TEST METHODS IS 0.025 GALLONS PER FOOT DIAMETER PER FOOT OF MANHOLE DEPTH PER HOUR.
        (B) TO PERFORM A HYDROSTATIC EXFILTRATION TEST, AN OWNER SHALL SEAL ALL WASTEWATER PIPES COMING INTO A MANHOLE WITH AN INTERNAL PIPE PLUG, FILL THE MANHOLE WITH WATER, AND MAINTAIN THE TEST FOR AT LEAST ONE HOUR.
        (C) A TEST FOR CONCRETE MANHOLES MAY USE A 24–HOUR WETTING PERIOD BEFORE TESTING TO ALLOW SATURATION OF THE CONCRETE.
    (2) VACUUM TESTING.
        (A) TO PERFORM A VACUUM TEST, AN OWNER SHALL PLUG ALL LIFT HOLES AND EXTERIOR JOINTS WITH A NON–SHRINK GROUT AND PLUG ALL PIPES ENTERING A MANHOLE.

        (B) NO GROUT MUST BE PLACED IN HORIZONTAL JOINTS BEFORE TESTING.

        (C) STUB–OUTS, MANHOLE BOOTS, AND PIPE PLUGS MUST BE SECURED TO PREVENT MOVEMENT WHILE A VACUUM IS DRAWN.

        (D) AN OWNER SHALL USE A MINIMUM 60 INCH/LB TORQUE WRENCH TO TIGHTEN THE EXTERNAL CLAMPS THAT SECURE A TEST COVER TO THE TOP OF A MANHOLE.

        (E) A TEST HEAD MUST BE PLACED AT THE INSIDE OF THE TOP OF A CONE SECTION, AND THE SEAL INFLATED IN ACCORDANCE WITH THE MANUFACTURER'S RECOMMENDATIONS.

        (F) THERE MUST BE A VACUUM OF 10 INCHES OF MERCURY INSIDE A MANHOLE TO PERFORM A VALID TEST.

        (G) A TEST DOES NOT BEGIN UNTIL AFTER THE VACUUM PUMP IS OFF.

        (H) A MANHOLE PASSES THE TEST IF AFTER 2.0 MINUTES AND WITH ALL VALVES CLOSED, THE VACUUM IS AT LEAST 9.0 INCHES OF MERCURY.

18. ALL PRIVATE SERVICE LATERALS MUST BE INSPECTED AND CERTIFIED IN ACCORDANCE WITH 30 TAC §213.5(C)(3)(I). AFTER INSTALLATION OF AND, PRIOR TO COVERING AND CONNECTING A PRIVATE SERVICE LATERAL TO AN EXISTING ORGANIZED SEWAGE COLLECTION SYSTEM, A TEXAS LICENSED PROFESSIONAL ENGINEER, TEXAS REGISTERED SANITARIAN, OR APPROPRIATE CITY INSPECTOR MUST VISUALLY INSPECT THE PRIVATE SERVICE LATERAL AND THE CONNECTION TO THE SEWAGE COLLECTION SYSTEM, AND CERTIFY THAT IT IS CONSTRUCTED IN CONFORMITY WITH THE APPLICABLE PROVISIONS OF THIS SECTION. THE OWNER OF THE COLLECTION SYSTEM MUST MAINTAIN SUCH CERTIFICATIONS FOR FIVE YEARS AND FORWARD COPIES TO THE APPROPRIATE REGIONAL OFFICE UPON REQUEST. CONNECTIONS MAY ONLY BE MADE TO AN APPROVED SEWAGE COLLECTION SYSTEM.

    THESE GENERAL CONSTRUCTION NOTES MUST BE INCLUDED ON THE CONSTRUCTION PLANS PROVIDED TO THE CONTRACTOR AND ALL SUBCONTRACTORS.

    TCEQ–0596 (Rev. 10/01/10)

TCEQ LIFT STATION AND FORCEMAIN GENERAL CONSTRUCTION NOTES:

1. THIS LIFT STATION AND/OR FORCE MAIN MUST BE CONSTRUCTED IN ACCORDANCE WITH 30 TEXAS ADMINISTRATIVE CODE (TAC) §213.5(C), THE TEXAS COMMISSION ON ENVIRONMENTAL QUALITY (TCEQ) EDWARDS AQUIFER RULES, AND ANY LOCAL GOVERNMENT STANDARD SPECIFICATIONS.

2. ANY MODIFICATION TO THE ACTIVITIES DESCRIBED IN THE REFERENCED LIFT STATION/FORCE MAIN (LSFM) SYSTEM APPLICATION FOLLOWING THE DATE OF APPROVAL MAY REQUIRE THE SUBMITTAL OF A LSFM SYSTEM APPLICATION TO MODIFY THIS APPROVAL, INCLUDING THE PAYMENT OF APPROPRIATE FEES AND ALL INFORMATION NECESSARY FOR ITS REVIEW AND APPROVAL.

3. A WRITTEN NOTICE OF CONSTRUCTION MUST BE SUBMITTED TO THE PRESIDING TCEQ REGIONAL OFFICE AT LEAST 48 HOURS PRIOR TO THE START OF ANY REGULATED ACTIVITIES. THIS NOTICE MUST INCLUDE:

    A. THE NAME OF THE APPROVED PROJECT;
    B. THE ACTIVITY START DATE; AND
    C. THE CONTACT INFORMATION OF THE PRIME CONTRACTOR.

4. UPON COMPLETION OF ANY LIFT STATION EXCAVATION, A GEOLOGIST MUST CERTIFY THAT THE EXCAVATION HAS BEEN INSPECTED FOR THE PRESENCE OF SENSITIVE FEATURES. THE CERTIFICATION MUST BE SIGNED, SEALED, AND DATED BY THE GEOLOGIST PREPARING THE CERTIFICATION. CERTIFICATION THAT THE EXCAVATION HAS BEEN INSPECTED MUST BE SUBMITTED TO THE APPROPRIATE REGIONAL OFFICE.

    A. IF SENSITIVE FEATURE(S) ARE IDENTIFIED, ALL REGULATED ACTIVITIES NEAR THE SENSITIVE FEATURE MUST BE SUSPENDED IMMEDIATELY AND MAY NOT PROCEED UNTIL THE EXECUTIVE DIRECTOR HAS REVIEWED AND APPROVED THE METHODS PROPOSED TO PROTECT ANY SENSITIVE FEATURE AND THE EDWARDS AQUIFER FROM POTENTIALLY ADVERSE IMPACTS TO WATER QUALITY FROM THE LIFT STATION.

    B. CONSTRUCTION MAY CONTINUE IF THE GEOLOGIST CERTIFIES THAT NO SENSITIVE FEATURE OR FEATURES WERE PRESENT.

5. IF ANY SENSITIVE FEATURES ARE DISCOVERED DURING THE WASTEWATER LINE TRENCHING ACTIVITIES, ALL REGULATED ACTIVITIES NEAR THE SENSITIVE FEATURE MUST BE SUSPENDED IMMEDIATELY. THE APPLICANT MUST IMMEDIATELY NOTIFY THE APPROPRIATE REGIONAL OFFICE OF THE TCEQ OF THE FEATURE DISCOVERY. A GEOLOGIST'S ASSESSMENT OF THE LOCATION AND EXTENT OF THE FEATURE DISCOVERED MUST BE REPORTED TO THAT REGIONAL OFFICE IN WRITING WITHIN TWO WORKING DAYS. THE APPLICANT MUST SUBMIT A PLAN FOR ENSURING THE STRUCTURAL INTEGRITY OF THE SEWER LINE OR FOR MODIFYING THE PROPOSED COLLECTION SYSTEM ALIGNMENT AROUND THE FEATURE. THE REGULATED ACTIVITIES NEAR THE SENSITIVE FEATURE MAY NOT PROCEED UNTIL THE EXECUTIVE DIRECTOR HAS REVIEWED AND APPROVED THE METHODS PROPOSED TO PROTECT THE SENSITIVE FEATURE AND THE EDWARDS AQUIFER FROM ANY POTENTIALLY ADVERSE IMPACTS TO WATER QUALITY WHILE MAINTAINING THE STRUCTURAL INTEGRITY OF THE LINE.

6. ALL FORCE MAIN LINES MUST BE TESTED IN ACCORDANCE WITH 30 TAC §217.68. TESTING METHOD WILL BE:

    A. A PRESSURE TEST MUST USE 50 POUNDS PER SQUARE INCH ABOVE THE NORMAL OPERATING PRESSURE OF A FORCE MAIN.

    B. A TEMPORARY VALVE FOR PRESSURE TESTING MAY BE INSTALLED NEAR THE DISCHARGE POINT OF A FORCE MAIN AND REMOVED AFTER A TEST IS SUCCESSFULLY COMPLETED.

    C. A PUMP ISOLATION VALVE MAY BE USED AS AN OPPOSITE TERMINATION POINT.

    D. A TEST MUST INVOLVE FILLING A FORCE MAIN WITH WATER.

    E. A PIPE MUST HOLD THE DESIGNATED TEST PRESSURE FOR A MINIMUM OF 4.0 HOURS.

    F. THE LEAKAGE RATE MUST NOT EXCEED 10.0 GALLONS PER INCH DIAMETER PER MILE OF PIPE PER DAY.

STATE OF TEXAS
GERALD S. FURRIER
129811
LICENSED
PROFESSIONAL ENGINEER
12/11/2023

REV. NO.	DATE	DRWN	CHKD	REMARKS

DESIGNED BY: A. KAJALE
DRAWN BY: S. DHANGAR
SHEET CHK'D BY: M. MAHADEVAN
CROSS CHK'D BY: A. RHAMES
APPROVED BY: G. FURRIER
DATE: DECEMBER 2023

CDM Smith
8310-1 N Capital of Texas Hwy, Suite 250
Austin, TX 78731
Tel: (512) 346-1100
TBPELS Firm Registration No. F-3043

CITY OF GEORGETOWN, TEXAS

CEDAR BREAKS AND D B WOOD LIFT STATIONS

STANDARD TCEQ GENERAL CONSTRUCTION NOTES I

PROJECT NO. 2048–272644
FILE NAME: G004NFGN.dwg
SHEET NO.
G-4

XREFs: [CDMS_2234, ADR–SEAL] Images: []
Last saved by: DOAKEC Time: 12/13/2023 3:34:39 PM
pw:\\pw.cdmsmith.com:PW_EXT\2048\109788\04 Design Services NM_30%\01 General\10 CADD\G004TCEQ.DWG
©2023 CDM SMITH ALL RIGHTS RESERVED.
REUSE OF DOCUMENTS: THESE DOCUMENTS AND DESIGNS PROVIDED BY PROFESSIONAL SERVICE, INCORPORATED HEREIN, ARE THE PROPERTY OF CDM SMITH AND ARE NOT TO BE USED, IN WHOLE OR PART, FOR ANY OTHER PROJECT WITHOUT THE WRITTEN AUTHORIZATION OF CDM SMITH.

Plotted: 12/14/2023 1:23:04 PM

© 2023 CDM SMITH ALL RIGHTS RESERVED.
REUSE OF DOCUMENTS: THESE DOCUMENTS AND DESIGNS PROVIDED BY PROFESSIONAL SERVICE, INCORPORATED HEREIN, ARE THE PROPERTY OF CDM SMITH AND ARE NOT TO BE USED, IN WHOLE OR PART, FOR ANY OTHER PROJECT WITHOUT THE WRITTEN AUTHORIZATION OF CDM SMITH.

CONSTRUCTION GENERAL PERMIT
TPDES GENERAL PERMIT TXR150000

THE SWP3 MUST INCLUDE, AT A MINIMUM, THE INFORMATION DESCRIBED IN THIS SECTION.

1. A SITE OR PROJECT DESCRIPTION, WHICH INCLUDES THE FOLLOWING INFORMATION:
   (A) A DESCRIPTION OF THE NATURE OF THE CONSTRUCTION ACTIVITY;

   (B) A LIST OF POTENTIAL POLLUTANTS AND THEIR SOURCES;

   (C) A DESCRIPTION OF THE INTENDED SCHEDULE OR SEQUENCE OF ACTIVITIES THAT WILL DISTURB SOILS FOR MAJOR PORTIONS OF THE SITE;

   (D) THE TOTAL NUMBER OF ACRES OF THE ENTIRE PROPERTY AND THE TOTAL NUMBER OF ACRES WHERE CONSTRUCTION ACTIVITIES WILL OCCUR, INCLUDING OFF–SITE MATERIAL STORAGE AREAS, OVERBURDEN AND STOCKPILES OF DIRT, AND BORROW AREAS THAT ARE AUTHORIZED UNDER THE PERMITTEE'S NOI;

   (E) DATA DESCRIBING THE SOIL OR THE QUALITY OF ANY DISCHARGE FROM THE SITE;

   (F) A MAP SHOWING THE GENERAL LOCATION OF THE SITE (E.G. A PORTION OF A CITY OR COUNTY MAP);

   (G) A DETAILED SITE MAP (OR MAPS) INDICATING THE FOLLOWING:

   (I) DRAINAGE PATTERNS AND APPROXIMATE SLOPES ANTICIPATED AFTER MAJOR GRADING ACTIVITIES;

   (II) AREAS WHERE SOIL DISTURBANCE WILL OCCUR;

   (III) LOCATIONS OF ALL MAJOR STRUCTURAL CONTROLS EITHER PLANNED OR IN PLACE;

   (IV) LOCATIONS WHERE TEMPORARY OR PERMANENT STABILIZATION PRACTICES ARE EXPECTED TO BE USED;

   (V) LOCATIONS OF CONSTRUCTION SUPPORT ACTIVITIES, INCLUDING OFF–SITE ACTIVITIES, THAT ARE AUTHORIZED UNDER THE PERMITTEE'S NOI, INCLUDING MATERIAL, WASTE, BORROW, FILL, OR EQUIPMENT STORAGE AREAS;

   (VI) SURFACE WATERS (INCLUDING WETLANDS) EITHER AT, ADJACENT, OR IN CLOSE PROXIMITY TO THE SITE;

   (VII) LOCATIONS WHERE STORM WATER DISCHARGES FROM THE SITE DIRECTLY TO A SURFACE WATER BODY OR A MUNICIPAL SEPARATE STORM SEWER SYSTEM; AND

   (VIII) VEHICLE WASH AREAS.
   WHERE THE AMOUNT OF INFORMATION REQUIRED TO BE INCLUDED ON THE MAP WOULD RESULT IN A SINGLE MAP BEING DIFFICULT TO READ AND INTERPRET, THE OPERATOR SHALL DEVELOP A SERIES OF MAPS THAT COLLECTIVELY INCLUDE THE REQUIRED INFORMATION.

   (H) THE LOCATION AND DESCRIPTION OF SUPPORT ACTIVITIES AUTHORIZED UNDER THE PERMITTEE'S NOI, INCLUDING ASPHALT PLANTS, CONCRETE PLANTS, AND OTHER ACTIVITIES PROVIDING SUPPORT TO THE CONSTRUCTION SITE THAT IS AUTHORIZED UNDER THIS GENERAL PERMIT;

   (I) THE NAME OF RECEIVING WATERS AT OR NEAR THE SITE THAT MAY BE DISTURBED OR THAT MAY RECEIVE DISCHARGES FROM DISTURBED AREAS OF THE PROJECT;

   (J) A COPY OF THIS TPDES GENERAL PERMIT, AND

   (K) THE NOTICE OF INTENT (NOI) AND ACKNOWLEDGEMENT CERTIFICATE FOR PRIMARY OPERATORS OF LARGE CONSTRUCTION SITES, AND THE SITE NOTICE FOR SMALL CONSTRUCTION SITES AND FOR SECONDARY OPERATORS OF LARGE CONSTRUCTION SITES.

2. A DESCRIPTION OF THE BEST MANAGEMENT PRACTICES (BMPS) THAT WILL BE USED TO MINIMIZE POLLUTION IN RUNOFF.
   THE DESCRIPTION MUST IDENTIFY THE GENERAL TIMING OR SEQUENCE FOR IMPLEMENTATION. AT A MINIMUM, THE DESCRIPTION MUST INCLUDE THE FOLLOWING COMPONENTS:

   (A) GENERAL REQUIREMENTS:

   (I) EROSION AND SEDIMENT CONTROLS MUST BE DESIGNED TO RETAIN SEDIMENT ON–SITE TO THE EXTENT PRACTICABLE WITH CONSIDERATION FOR LOCAL TOPOGRAPHY, SOIL TYPE, AND RAINFALL.

   (II) CONTROL MEASURES MUST BE PROPERLY SELECTED, INSTALLED, AND MAINTAINED ACCORDING TO THE MANUFACTURER'S OR DESIGNER'S SPECIFICATIONS.

   (III) CONTROLS MUST BE DEVELOPED TO MINIMIZE THE OFFSITE TRANSPORT OF LITTER,CONSTRUCTION DEBRIS, AND CONSTRUCTION MATERIALS.

   (B) EROSION CONTROL AND STABILIZATION PRACTICES
   THE SWP3 MUST INCLUDE A DESCRIPTION OF TEMPORARY AND PERMANENT EROSION CONTROL AND STABILIZATION PRACTICES FOR THE SITE, INCLUDING A SCHEDULE OF WHEN THE PRACTICES WILL BE IMPLEMENTED. SITE PLANS SHOULD ENSURE THAT EXISTING VEGETATION IS PRESERVED WHERE IT IS POSSIBLE.

   (I) EROSION CONTROL AND STABILIZATION PRACTICES MAY INCLUDE BUT ARE NOT LIMITED TO: ESTABLISHMENT OF TEMPORARY OR PERMANENT VEGETATION, MULCHING, GEOTEXTILES,SOD STABILIZATION, VEGETATIVE BUFFER STRIPS, PROTECTION OF EXISTING TREES AND VEGETATION, SLOPE TEXTURING, TEMPORARY VELOCITY DISSIPATION DEVICES, FLOW DIVERSION MECHANISMS, AND OTHER SIMILAR MEASURES.

   (II) THE FOLLOWING RECORDS MUST BE MAINTAINED AND EITHER ATTACHED TO OR REFERENCED IN THE SWP3, AND MADE READILY AVAILABLE UPON REQUEST TO THE PARTIES LISTED IN PART III.D.1 OF THIS GENERAL PERMIT:

   (A) THE DATES WHEN MAJOR GRADING ACTIVITIES OCCUR;

   (B) THE DATES WHEN CONSTRUCTION ACTIVITIES TEMPORARILY OR PERMANENTLY CEASE ON A PORTION OF THE SITE; AND

   (C) THE DATES WHEN STABILIZATION MEASURES ARE INITIATED.

   (III) EROSION CONTROL AND STABILIZATION MEASURES MUST BE INITIATED AS SOON AS PRACTICABLE IN PORTIONS OF THE SITE WHERE CONSTRUCTION ACTIVITIES HAVE TEMPORARILY CEASED. STABILIZATION MEASURES THAT PROVIDE A PROTECTIVE COVER MUST BE INITIATED AS SOON AS PRACTICABLE IN PORTIONS OF THE SITE WHERE CONSTRUCTION ACTIVITIES HAVE PERMANENTLY CEASED. EXCEPT AS PROVIDED IN (A) THROUGH (D) BELOW, THESE MEASURES MUST BE INITIATED NO MORE THAN 14 DAYS AFTER THE CONSTRUCTION ACTIVITY IN THAT PORTION OF THE SITE HAS TEMPORARILY OR PERMANENTLY CEASED.

TEXAS COMMISSION ON ENVIRONMENTAL QUALITY
WATER POLLUTION ABATEMENT PLAN
GENERAL CONSTRUCTION NOTES

1. A WRITTEN NOTICE OF CONSTRUCTION MUST BE SUBMITTED TO THE TCEQ REGIONAL OFFICE AT LEAST 48 HOURS PRIOR TO THE START OF ANY REGULATED ACTIVITIES. THIS NOTICE MUST INCLUDE:
   – THE NAME OF THE APPROVED PROJECT;
   – THE ACTIVITY START DATE; AND
   – THE CONTACT INFORMATION OF THE PRIME CONTRACTOR.

2. ALL CONTRACTORS CONDUCTING REGULATED ACTIVITIES ASSOCIATED WITH THIS PROJECT MUST BE PROVIDED WITH COMPLETE COPIES OF THE APPROVED WATER POLLUTION ABATEMENT PLAN (WPAP) AND THE TCEQ LETTER INDICATING THE SPECIFIC CONDITIONS OF ITS APPROVAL. DURING THE COURSE OF THESE REGULATED ACTIVITIES, THE CONTRACTORS ARE REQUIRED TO KEEP ON–SITE COPIES OF THE APPROVED PLAN AND APPROVAL LETTER.

3. IF ANY SENSITIVE FEATURE(S) (CAVES, SOLUTION CAVITY, SINK HOLE, ETC.) IS DISCOVERED DURING CONSTRUCTION, ALL REGULATED ACTIVITIES NEAR THE SENSITIVE FEATURE MUST BE SUSPENDED IMMEDIATELY. THE APPROPRIATE TCEQ REGIONAL OFFICE MUST BE IMMEDIATELY NOTIFIED OF ANY SENSITIVE FEATURES ENCOUNTERED DURING CONSTRUCTION. CONSTRUCTION ACTIVITIES MAY NOT BE RESUMED UNTIL THE TCEQ HAS REVIEWED AND APPROVED THE APPROPRIATE PROTECTIVE MEASURES IN ORDER TO PROTECT ANY SENSITIVE FEATURE AND THE EDWARDS AQUIFER FROM POTENTIALLY ADVERSE IMPACTS TO WATER QUALITY.

4. NO TEMPORARY OR PERMANENT HAZARDOUS SUBSTANCE STORAGE TANK SHALL BE INSTALLED WITHIN 150 FEET OF A WATER SUPPLY SOURCE, DISTRIBUTION SYSTEM, WELL, OR SENSITIVE FEATURE.

5. PRIOR TO BEGINNING ANY CONSTRUCTION ACTIVITY, ALL TEMPORARY EROSION AND SEDIMENTATION (E&S) CONTROL MEASURES MUST BE PROPERLY INSTALLED AND MAINTAINED IN ACCORDANCE WITH THE APPROVED PLANS AND MANUFACTURERS SPECIFICATIONS. IF INSPECTIONS INDICATE A CONTROL HAS BEEN USED INAPPROPRIATELY, OR INCORRECTLY, THE APPLICANT MUST REPLACE OR MODIFY THE CONTROL FOR SITE SITUATIONS. THESE CONTROLS MUST REMAIN IN PLACE UNTIL THE DISTURBED AREAS HAVE BEEN PERMANENTLY STABILIZED.

6. ANY SEDIMENT THAT ESCAPES THE CONSTRUCTION SITE MUST BE COLLECTED AND PROPERLY DISPOSED OF BEFORE THE NEXT RAIN EVENT TO ENSURE IT IS NOT WASHED INTO SURFACE STREAMS, SENSITIVE FEATURES, ETC.

7. SEDIMENT MUST BE REMOVED FROM THE SEDIMENT TRAPS OR SEDIMENTATION BASINS NOT LATER THAN WHEN IT OCCUPIES 50% OF THE BASIN'S DESIGN CAPACITY.

8. LITTER, CONSTRUCTION DEBRIS, AND CONSTRUCTION CHEMICALS EXPOSED TO STORMWATER SHALL BE PREVENTED FROM BEING DISCHARGED OFFSITE.

9. ALL SPOILS (EXCAVATED MATERIAL) GENERATED FROM THE PROJECT SITE MUST BE STORED ON–SITE WITH PROPER E&S CONTROLS. FOR STORAGE OR DISPOSAL OF SPOILS AT ANOTHER SITE ON THE EDWARDS AQUIFER RECHARGE ZONE, THE OWNER OF THE SITE MUST RECEIVE APPROVAL OF A WATER POLLUTION ABATEMENT PLAN FOR THE PLACEMENT OF FILL MATERIAL OR MASS GRADING PRIOR TO THE PLACEMENT OF SPOILS AT THE OTHER SITE.

10. IF PORTIONS OF THE SITE WILL HAVE A TEMPORARY OR PERMANENT CEASE IN CONSTRUCTION ACTIVITY LASTING LONGER THAN 14 DAYS, SOIL STABILIZATION IN THOSE AREAS SHALL BE INITIATED AS SOON AS POSSIBLE PRIOR TO THE 14TH DAY OF INACTIVITY. IF ACTIVITY WILL RESUME PRIOR TO THE 21ST DAY, STABILIZATION MEASURES ARE NOT REQUIRED. IF DROUGHT CONDITIONS OR INCLEMENT WEATHER PREVENT ACTION BY THE 14TH DAY, STABILIZATION MEASURES SHALL BE INITIATED AS SOON AS POSSIBLE.

11. THE FOLLOWING RECORDS SHALL BE MAINTAINED AND MADE AVAILABLE TO THE TCEQ UPON REQUEST:
   – THE DATES WHEN MAJOR GRADING ACTIVITIES OCCUR;
   – THE DATES WHEN CONSTRUCTION ACTIVITIES TEMPORARILY OR PERMANENTLY CEASE ON A PORTION OF THE SITE; AND
   – THE DATES WHEN STABILIZATION MEASURES ARE INITIATED.

12. THE HOLDER OF ANY APPROVED EDWARD AQUIFER PROTECTION PLAN MUST NOTIFY THE APPROPRIATE REGIONAL OFFICE IN WRITING AND OBTAIN APPROVAL FROM THE EXECUTIVE DIRECTOR PRIOR TO INITIATING ANY OF THE FOLLOWING:

A. ANY PHYSICAL OR OPERATIONAL MODIFICATION OF ANY WATER POLLUTION ABATEMENT STRUCTURE(S), INCLUDING BUT NOT LIMITED TO PONDS, DAMS, BERMS, SEWAGE TREATMENT PLANTS, AND DIVERSIONARY STRUCTURES;

B. ANY CHANGE IN THE NATURE OR CHARACTER OF THE REGULATED ACTIVITY FROM THAT WHICH WAS ORIGINALLY APPROVED OR A CHANGE WHICH WOULD SIGNIFICANTLY IMPACT THE ABILITY OF THE PLAN TO PREVENT POLLUTION OF THE EDWARDS AQUIFER;

C. ANY DEVELOPMENT OF LAND PREVIOUSLY IDENTIFIED AS UNDEVELOPED IN THE ORIGINAL WATER POLLUTION ABATEMENT PLAN.

AUSTIN REGIONAL OFFICE
12100 PARK 35 CIRCLE, BUILDING A
AUSTIN, TEXAS 78753–1808
PHONE (512) 339–2929
FAX (512) 339–3795
SAN ANTONIO REGIONAL OFFICE
14250 JUDSON ROAD
SAN ANTONIO, TEXAS 78233–4480
PHONE (210) 490–3096
FAX (210) 545–4329

THESE GENERAL CONSTRUCTION NOTES MUST BE INCLUDED ON THE CONSTRUCTION PLANS PROVIDED TO THE CONTRACTOR AND ALL SUBCONTRACTORS.

TCEQ–0592 (REV. 10/21/15)

STATE OF TEXAS
GERALD S. FURRIER
129811
LICENSED
PROFESSIONAL ENGINEER
12/11/2023

REV. NO.	DATE	DRWN	CHKD	REMARKS

DESIGNED BY: A. KAJALE
DRAWN BY: S. DHANGAR
SHEET CHK'D BY: M. MAHADEVAN
CROSS CHK'D BY: A. RHAMES
APPROVED BY: G. FURRIER
DATE: DECEMBER 2023

CDM Smith
8310-1 N Capital of Texas Hwy, Suite 250
Austin, TX 78731
Tel: (512) 346-1100
TBPELS Firm Registration No. F-3043

CITY OF GEORGETOWN, TEXAS

CEDAR BREAKS AND D B WOOD LIFT STATIONS

TCEQ GENERAL CONSTRUCTION NOTES II

PROJECT NO. 2048–272644
FILE NAME: G005NFMN.dwg
SHEET NO.
G-5

Plotted: 12/14/2023 1:23:22 PM

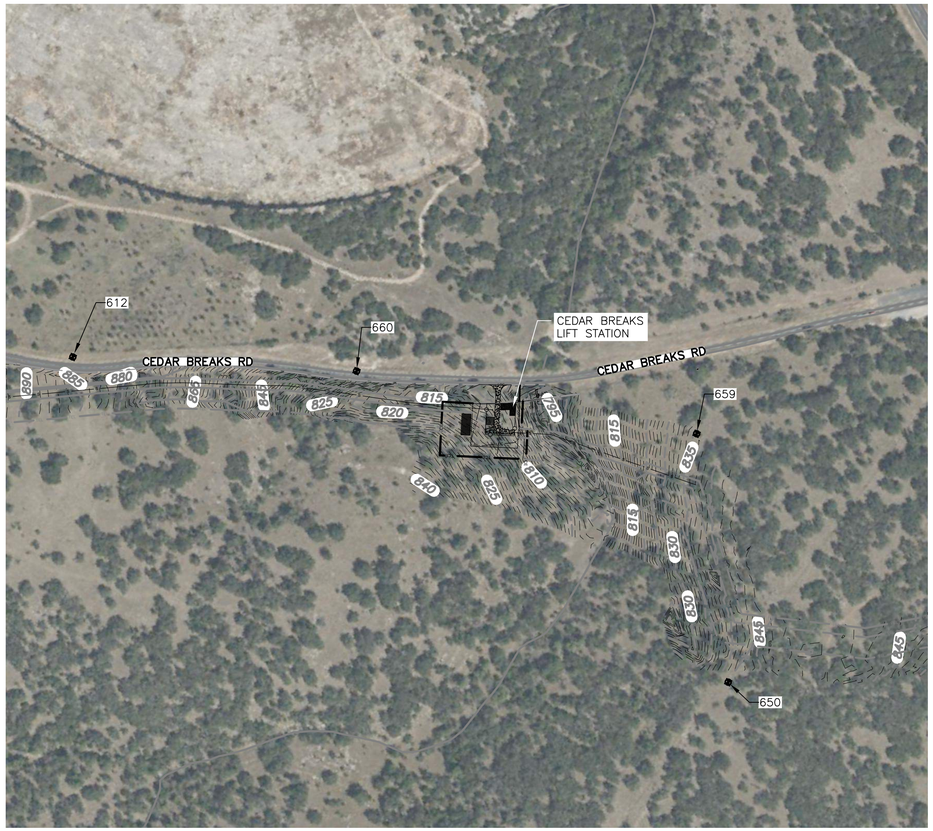

CEDAR BREAK LIFT STATION

PLAN

1" = 250'

D B WOOD LIFT STATION

PLAN

1" = 250'

1" = 250'
125 0 250
N

HORIZONTAL CONTROL POINT TABLE				
POINT NO.	ELEVATION	NORTHING	EASTING	DESCRIPTION
612	885.87	10214526.55	3114211.67	80D/W
650	842.27	10212735.25	3115829.73	80D/W
654	772.39	10209431.96	3118426.38	IRSC-IC-5/8
655	794.67	10209890.37	3118498.38	IRSC-IC-5/8
656	812.98	10211014.29	3117830.92	IRSC-IC-5/8
659	835.59	10213535.88	3116033.31	IRSC-IC-5/8
660	831.35	10214139.81	3115065.46	IRSC-IC-5/8

SURVEY CONTROL NOTE:

SURVEY CONTROL NOTES:
COORDINATES ARE SURFACE VALUES BASED ON THE TEXAS STATE PLANE COORDINATE SYSTEM, NAD 83, CENTRAL ZONE 4203. TO CONVERT COORDINATES AND DISTANCES TO GRID VALUES DIVIDE BY A COMBINED SURFACE ADJUSTMENT FACTOR OF 0.9998673234. ELEVATIONS REPORTED ARE ORTHOMETRIC HEIGHTS BASED ON NAVD 88.

STATE OF TEXAS
GERALD S. FURRIER
129811
LICENSED
PROFESSIONAL ENGINEER
12/11/2023

REV. NO.	DATE	DRWN	CHKD	REMARKS

DESIGNED BY: A. KAJALE
DRAWN BY: M. KULKARNI
SHEET CHK'D BY: M. MAHADEVAN
CROSS CHK'D BY: A. RHAMES
APPROVED BY: G. FURRIER
DATE: DECEMBER 2023

CDM Smith
8310-1 N Capital of Texas Hwy, Suite 250
Austin, TX 78731
Tel: (512) 346-1100
TBPELS Firm Registration No. F-3043

CITY OF GEORGETOWN, TEXAS

CEDAR BREAKS AND D B WOOD LIFT STATIONS

HORIZONTAL CONTROLS PLAN

PROJECT NO. 2048-272644
FILE NAME: G006HCPL.DWG

SHEET NO.
G-6

Plotted: 12/14/2023 1:24:37 PM

XREFs: [CDMS_2234, CWP001YP, CEP000SS, CWP005SR, CWP001LS, CWP002LS, CEP001SS, CEP002SS, CDMS-003-SF INTERCEPTOR BRIDGE-FINAL-REV2, CEP004SS] Images: []
Last saved by: VIDYAVATHL Time: 10/13/2023 6:16:43 PM
C:\pw_pi1\VIDYAVATHL\d3892778\G006HCPL.dwg

©2023 CDM SMITH ALL RIGHTS RESERVED.
REUSE OF DOCUMENTS: THESE DOCUMENTS AND DESIGNS PROVIDED BY PROFESSIONAL SERVICE, INCORPORATED HEREIN, ARE THE PROPERTY OF CDM SMITH AND ARE NOT TO BE USED, IN WHOLE OR PART, FOR ANY OTHER PROJECT WITHOUT THE WRITTEN AUTHORIZATION OF CDM SMITH.

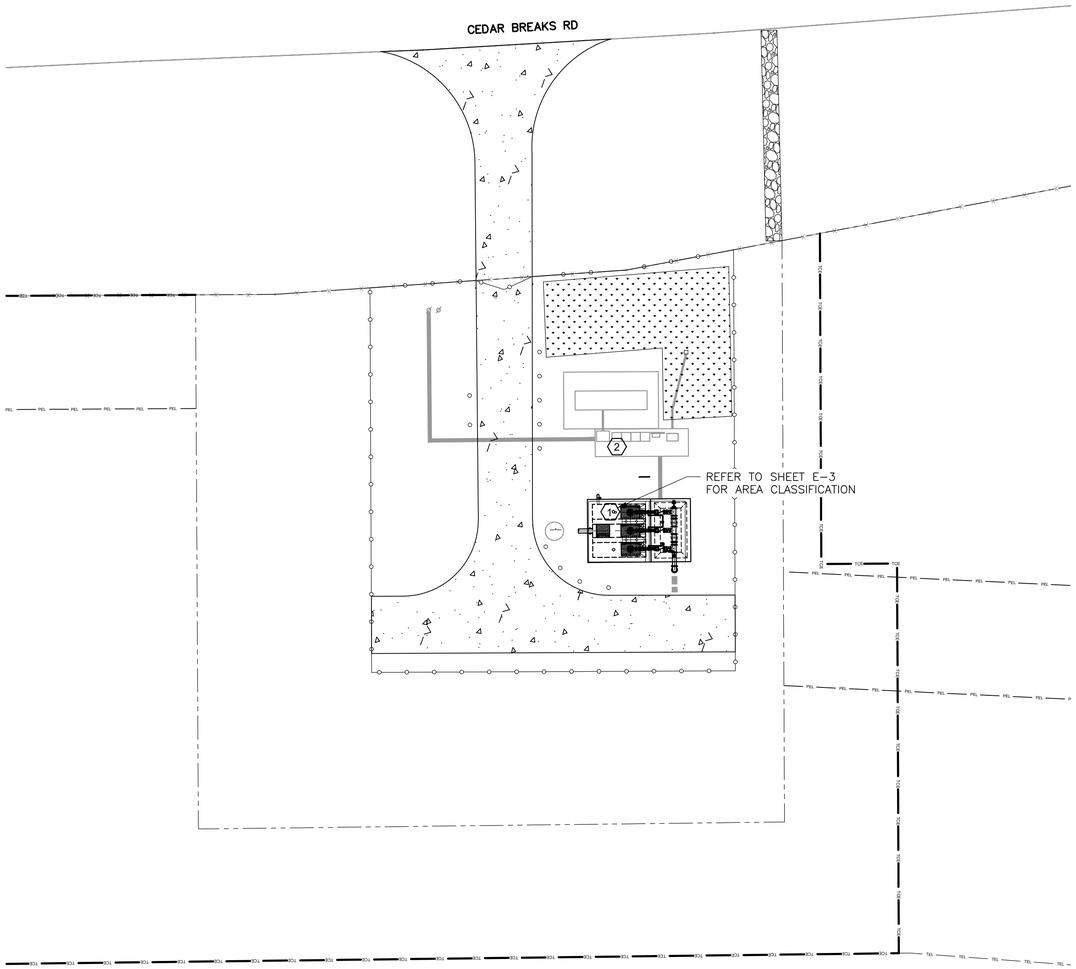

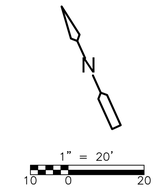

AREA CLASSIFICATION LEGEND:

- CLASS I DIVISION 1
- UNCLASSIFIED
- CLASS I DIVISION 2

ABBREVIATIONS:

N/A – NOT APPLICABLE
CGD – COMBUSTIBLE GAS DETECTION REQUIRED
H – HYDRANT
FE – PORTABLE FIRE EXTINGUISHER
FAS – FIRE ALARM SYSTEM
NR – NO REQUIREMENT
FSS – FIRE SUPPRESSION SYSTEM
FDS – FIRE DETECTION SYSTEM

NOTES:

1. PIPE SUPPORT MATERIALS SHALL BE SIMILAR FOR PROCESS MECHANICAL, PLUMBING, FIRE, HVAC PIPING SYSTEMS.
2. HARDWARE MATERIALS SHALL BE SIMILAR FOR PROCESS MECHANICAL, PLUMBING, FIRE, HVAC, ELECTRICAL, AND INSTRUMENTATION & CONTROL SYSTEMS UNLESS OTHERWISE NOTED.
3. DESIGNATIONS ARE NOTED ON TABLE ABOVE.
4. MATERIALS NOTED ABOVE APPLY TO ALL AREAS OF THE PROJECT UNLESS OTHERWISE NOTED.
5. LIQUIDTIGHT FLEXIBLE ALUMINUM CONDUIT SHALL BE USED FOR CONNECTION TO ONLY VIBRATING EQUIPMENT IN ALL AREAS. CONDUIT BENDS OF MORE THAN 15 DEGREES IN DUCTBANKS AND LOCATIONS WHERE CONDUIT TRANSITIONS FROM BELOW GRADE TO ABOVE GRADE SHALL BE PVC COATED ALUMINUM.
6. ELECTRIC METALLIC TUBING (EMT) – STEEL AND HOT DIPPED GALVANIZED STEEL DEVICE BOXES, HARDWARE AND SUPPORTS SHALL BE USED IN DRY INDOOR AREAS OF THE OPERATIONS FACILITY.
7. PROVIDE SUITABLE INSULATING MATERIAL WITH ADEQUATE DIELECTRIC STRENGTH WHEN DISSIMILAR METALS COME IN CONTACT, AS DETERMINED BY THE PIPE SUPPORT DESIGN ENGINEER.

TAG	AREA	NFPA 820 2016 EDITION	VENTILATION REQUIREMENTS	ELECTRICAL CLASSIFICATION	EXTENT OF CLASSIFIED AREA	NFPA FIRE PROTECTION MEASURES	NOTES
1	WASTEWATER PUMPING STATION WET WELL	TABLE 4.2.2 ROW 16a	NO VENTILATION	CLASS I, DIVISION 1	ENTIRE SPACE REFER TO DETAIL A	NR	CORROSIVE
2	ELECTRICAL EQUIPMENT PAD	N/A	N/A	UNCLASSIFIED	N/A	NR	DRY

AREA CLASSIFICATION TABLE
NTS

DESIGNATION (NOTE 3)	HAZARDOUS CLASSIFICATION	NEMA 250 ENCLOSURE CLASSIFICATION	NEMA 250 ENCLOSURE MATERIALS (NOTE 4)	ELECTRICAL CONDUIT MATERIALS [NOTE 5]	MATERIALS FOR ELECTRICAL OUTLET AND DEVICE BOXES, MOUNTING PLATES AND FITTINGS	MATERIALS FOR ELECTRICAL CONDUITS/CABLET RAY SUPPORTS	ELECTRICAL FRAMING CHANNEL MATERIAL	DUCTWORK MATERIALS [NOTE 8]	MATERIALS FOR DUCTWORK SUPPORTS [NOTE 1 & 4]	MATERIALS FOR PIPING SUPPORTS FOR ALL TRADES [NOTE 1 & 4]	ANCHOR BOLTS FOR ALL TRADES	MOUNTING HARDWARE FOR ALL TRADES, (I.E. NITS, BOLTS, FASTENER, ETC.) [NOTE 2]	NOTES
OUTDOOR, WET CORROSIVE	CLASSIFIED	NEMA 7	316 SST	RIGID ALUMINUM	CAST ALUMINUM	316 SST	316 SST	ALUMINUM, FRP	316 SST	316 SST	316 SST	316 SST	
	UNCLASSIFIED	NEMA 4X	316 SST	RIGID ALUMINUM	CAST ALUMINUM	316 SST	316 SST	ALUMINUM, FRP	316 SST	316 SST	316 SST	316 SST	
OUTDOOR, WET		NEMA 4	PAINTED STEEL	RIGID ALUMINUM	CAST ALUMINUM	HOT DIPPED GALVANIZED STEEL	HOT DIPPED GALVANIZED STEEL	ALUMINUM, FRP	HOT DIPPED GALVANIZED STEEL	317 SST	316 SST	316 SST	

STATE OF TEXAS
GERALD S. FURRIER
129811
LICENSED
PROFESSIONAL ENGINEER
12/11/2023

REV. NO.	DATE	DRWN	CHKD	REMARKS

DESIGNED BY: A. KAJALE
DRAWN BY: S. DHANGAR
SHEET CHK'D BY: M. MAHADEVAN
CROSS CHK'D BY: A. RHAMES
APPROVED BY: G. FURRIER
DATE: DECEMBER 2023

CDM Smith
8310-1 N Capital of Texas Hwy, Suite 250
Austin, TX 78731
Tel: (512) 346-1100
TBPELS Firm Registration No. F-3043

CITY OF GEORGETOWN, TEXAS

CEDAR BREAKS AND D B WOOD LIFT STATIONS

CEDAR BREAKS LIFT STATION
AREA CLASSIFICATION PLAN
AND BUILDING MATERIALS OF CONSTRUCTION

PROJECT NO. 2048–272644
FILE NAME: G007ACPL.DWG
SHEET NO.
G-7

XREFs: [CDMS_2234_CWP001YP, CEP000SS, CWP005SR, CWP001LS, CWP002LS, CEP001SS, CEP002SS, CDMS-003-SF INTERCEPTOR BRIDGE-FINAL-REV2, EWP001ST, M002LSPS, CDMS_2234_South lake to South fork_Border, MWP001LS, SWS001LS, SWP001LS] Images: []
Last saved by: MAHADEVANM Time: 8/9/2023 9:25:02 PM
pw:\\cdnsmith-az2-pw.bentley.com:pw_pi1\2048\272644\04 Design Services NM_50%\01 General\10 BIM_CADD\G007ACPL.dwg
©2023 CDM SMITH ALL RIGHTS RESERVED.
REUSE OF DOCUMENTS: THESE DOCUMENTS AND DESIGNS PROVIDED BY PROFESSIONAL SERVICE, INCORPORATED HEREIN, ARE THE PROPERTY OF CDM SMITH AND ARE NOT TO BE USED, IN WHOLE OR PART, FOR ANY OTHER PROJECT WITHOUT THE WRITTEN AUTHORIZATION OF CDM SMITH.

Plotted: 12/14/2023 1:28:13 PM

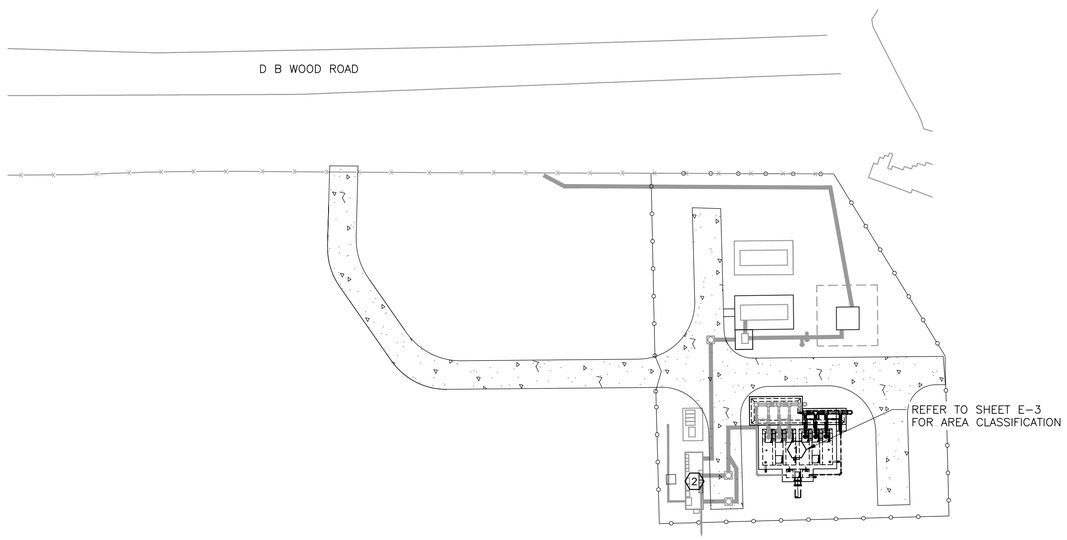

N

1" = 40'
20 0 40

AREA CLASSIFICATION LEGEND:

- CLASS I DIVISION 1
- UNCLASSIFIED
- CLASS I DIVISION 2

ABBREVIATIONS:

N/A – NOT APPLICABLE
CGD – COMBUSTIBLE GAS DETECTION REQUIRED
H – HYDRANT
FE – PORTABLE FIRE EXTINGUISHER
FAS – FIRE ALARM SYSTEM
NR – NO REQUIREMENT
FSS – FIRE SUPPRESSION SYSTEM
FDS – FIRE DETECTION SYSTEM

NOTES:

1. PIPE SUPPORT MATERIALS SHALL BE SIMILAR FOR PROCESS MECHANICAL, PLUMBING, FIRE, HVAC PIPING SYSTEMS.
2. HARDWARE MATERIALS SHALL BE SIMILAR FOR PROCESS MECHANICAL, PLUMBING, FIRE, HVAC, ELECTRICAL, AND INSTRUMENTATION & CONTROL SYSTEMS UNLESS OTHERWISE NOTED.
3. DESIGNATIONS ARE NOTED ON TABLE ABOVE.
4. MATERIALS NOTED ABOVE APPLY TO ALL AREAS OF THE PROJECT UNLESS OTHERWISE NOTED.
5. LIQUIDTIGHT FLEXIBLE ALUMINUM CONDUIT SHALL BE USED FOR CONNECTION TO ONLY VIBRATING EQUIPMENT IN ALL AREAS. CONDUIT BENDS OF MORE THAN 15 DEGREES IN DUCTBANKS AND LOCATIONS WHERE CONDUIT TRANSITIONS FROM BELOW GRADE TO ABOVE GRADE SHALL BE PVC COATED ALUMINUM.
6. ELECTRIC METALLIC TUBING (EMT) – STEEL AND HOT DIPPED GALVANIZED STEEL DEVICE BOXES, HARDWARE AND SUPPORTS SHALL BE USED IN DRY INDOOR AREAS OF THE OPERATIONS FACILITY.
7. PROVIDE SUITABLE INSULATING MATERIAL WITH ADEQUATE DIELECTRIC STRENGTH WHEN DISSIMILAR METALS COME IN CONTACT, AS DETERMINED BY THE PIPE SUPPORT DESIGN ENGINEER.

TAG	AREA	NFPA 820 2016 EDITION	VENTILATION REQUIREMENTS	ELECTRICAL CLASSIFICATION	EXTENT OF CLASSIFIED AREA	NFPA FIRE PROTECTION MEASURES	NOTES
1	WASTEWATER PUMPING STATION WET WELL	TABLE 4.2.2 ROW 16a	NO VENTILATION	CLASS I, DIVISION 1	ENTIRE SPACE REFER TO DETAIL A	NR	CORROSIVE
2	E HOUSE	N/A	N/A	UNCLASSIFIED	N/A	NR	DRY

AREA CLASSIFICATION TABLE

NTS

DESIGNATION [NOTE 3]	HAZARDOUS CLASSIFICATION	NEMA 250 ENCLOSURE CLASSIFICATION	NEMA 250 ENCLOSURE MATERIALS [NOTE 4]	ELECTRICAL CONDUIT MATERIALS [NOTE 5]	MATERIALS FOR ELECTRICAL OUTLET AND DEVICE BOXES, MOUNTING PLATES AND FITTINGS	MATERIALS FOR ELECTRICAL CONDUITS/CABLETRAY SUPPORTS	ELECTRICAL FRAMING CHANNEL MATERIAL	DUCTWORK MATERIALS [NOTE 8]	MATERIALS FOR DUCTWORK SUPPORTS [NOTE 1 & 4]	MATERIALS FOR PIPING SUPPORTS FOR ALL TRADES [NOTE 1 & 4]	ANCHOR BOLTS FOR ALL TRADES	MOUNTING HARDWARE FOR ALL TRADES, (I.E. NITS, BOLTS, FASTENER, ETC.) [NOTE 2]	NOTES
OUTDOOR, WET CORROSIVE	CLASSIFIED	NEMA 7	316 SST	RIGID ALUMINUM	CAST ALUMINUM	316 SST	316 SST	ALUMINUM, FRP	316 SST	316 SST	316 SST	316 SST	
	UNCLASSIFIED	NEMA 4X	316 SST	RIGID ALUMINUM	CAST ALUMINUM	316 SST	316 SST	ALUMINUM, FRP	316 SST	316 SST	316 SST	316 SST	
OUTDOOR, WET CORROSIVE	UNCLASSIFIED	NEMA 4	PAINTED STEEL	RIGID ALUMINUM	CAST ALUMINUM	HOT DIPPED GALVANIZED STEEL	HOT DIPPED GALVANIZED STEEL	ALUMINUM, FRP	HOT DIPPED GALVANIZED STEEL	317 SST	316 SST	316 SST	
INDOOR, DRY	UNCLASSIFIED	NAMA 1/NEMA 12	PAINTED STEEL	RIGID ALUMINUM [6]	CAST ALUMINUM [6]	HOT DIPPED GALVANIZED STEEL	HOT DIPPED GALVANIZED STEEL	ALUMINUM	HOT DIPPED GALVANIZED STEEL	HOT DIPPED GALVANIZED STEEL	HOT DIPPED GALVANIZED STEEL	HOT DIPPED GALVANIZED STEEL	

STATE OF TEXAS
GERALD S. FURRIER
129811
LICENSED PROFESSIONAL ENGINEER
12/11/2023

REV. NO.	DATE	DRWN	CHKD	REMARKS

DESIGNED BY: A. KAJALE
DRAWN BY: S. DHANGAR
SHEET CHK'D BY: M. MAHADEVAN
CROSS CHK'D BY: A. RHAMES
APPROVED BY: G. FURRIER
DATE: DECEMBER 2023

CDM Smith
8310-1 N Capital of Texas Hwy, Suite 250
Austin, TX 78731
Tel: (512) 346-1100
TBPELS Firm Registration No. F-3043

CITY OF GEORGETOWN, TEXAS

CEDAR BREAKS AND D B WOOD LIFT STATIONS

D B WOOD LIFT STATION AREA CLASSIFICATION PLAN AND BUILDING MATERIALS OF CONSTRUCTION

PROJECT NO. 2048–272644
FILE NAME: G008ACPL.DWG

SHEET NO.
G-8

XREFs: [CDMS_2234_CWP001YP, CEP000SS, CWP005SR, CWP011LS, CWP002LS, CEP001SS, CEP002SS, CDMS-003-SF INTERCEPTOR BRIDGE-FINAL-REV2, EWP001ST, M002LSPS, CDMS_2234_South lake to South fork_Border, MWP001LS, SWS001LS, SWP001LS, SWP004LS, EWP002ST] Images: []
Last saved by: MAHADEVAM Time: 8/9/2023 9:23:33 PM
pw:\\cdmsmith-a202-pw.bentley.com:pw_p1\2048\272644\04 Design Services NM_50%\01 General\10 BIM_CADD\G008ACPL.dwg
©2023 CDM SMITH ALL RIGHTS RESERVED.
REUSE OF DOCUMENTS: THESE DOCUMENTS AND DESIGNS PROVIDED BY PROFESSIONAL SERVICE, INCORPORATED HEREIN, ARE THE PROPERTY OF CDM SMITH AND ARE NOT TO BE USED, IN WHOLE OR PART, FOR ANY OTHER PROJECT WITHOUT THE WRITTEN AUTHORIZATION OF CDM SMITH.

Plotted: 12/14/2023 1:32:14 PM

PLAN
1"=50'

PLAN
1"=50'

NOTES:

1. CLEAR THE ENTIRE LIFT STATION PROPERTY, UTILITY EASEMENT AND ACCESS, REVEGETATE AT THE END OF THE PROJECT.
2. CLEAR THE TEMPORARY CONSTRUCTION EASEMENT AS NECESSARY FOR CONSTRUCTION ACTIVITIES AND REVEGETATE AT THE END OF THE PROJECT.
3. CLEARING IS NOT ALLOWED BETWEEN MARCH 1ST TO SEPTEMBER 1ST.

STATE OF TEXAS
GERALD S. FURRIER
129811
LICENSED
PROFESSIONAL ENGINEER
12/11/2023

REV. NO.	DATE	DRWN	CHKD	REMARKS

DESIGNED BY: A. KAJALE
DRAWN BY: M. KULKARNI
SHEET CHK'D BY: A. KAJALE
CROSS CHK'D BY: A. RHAMES
APPROVED BY: G. FURRIER
DATE: DECEMBER 2023

CDM Smith
8310-1 N Capital of Texas Hwy, Suite 250
Austin, TX 78731
Tel: (512) 346-1100
TBPELS Firm Registration No. F-3043

CITY OF GEORGETOWN, TEXAS

CEDAR BREAKS AND D B WOOD LIFT STATIONS

OVERALL SITE PLAN

PROJECT NO. 2048-272644
FILE NAME: C001STPL.DWG
SHEET NO.
C-1

XREFs: [CDMS_2234, CWP002LS, CWP001LS, SWP001LS, SWP002LS, MWP002LS, MWP001LS, CWP003ST, CWP005SR] Images: []
Last saved by: KAJALEAN Time: 12/13/2023 6:35:14 PM
C:\pw_pl1\kajalean\d3867734\C001STPL.dwg
©2023 CDM SMITH ALL RIGHTS RESERVED.
REUSE OF DOCUMENTS: THESE DOCUMENTS AND DESIGNS PROVIDED BY PROFESSIONAL SERVICE, INCORPORATED HEREIN, ARE THE PROPERTY OF CDM SMITH AND ARE NOT TO BE USED, IN WHOLE OR PART, FOR ANY OTHER PROJECT WITHOUT THE WRITTEN AUTHORIZATION OF CDM SMITH.

Plotted: 12/14/2023 12:31:04 PM

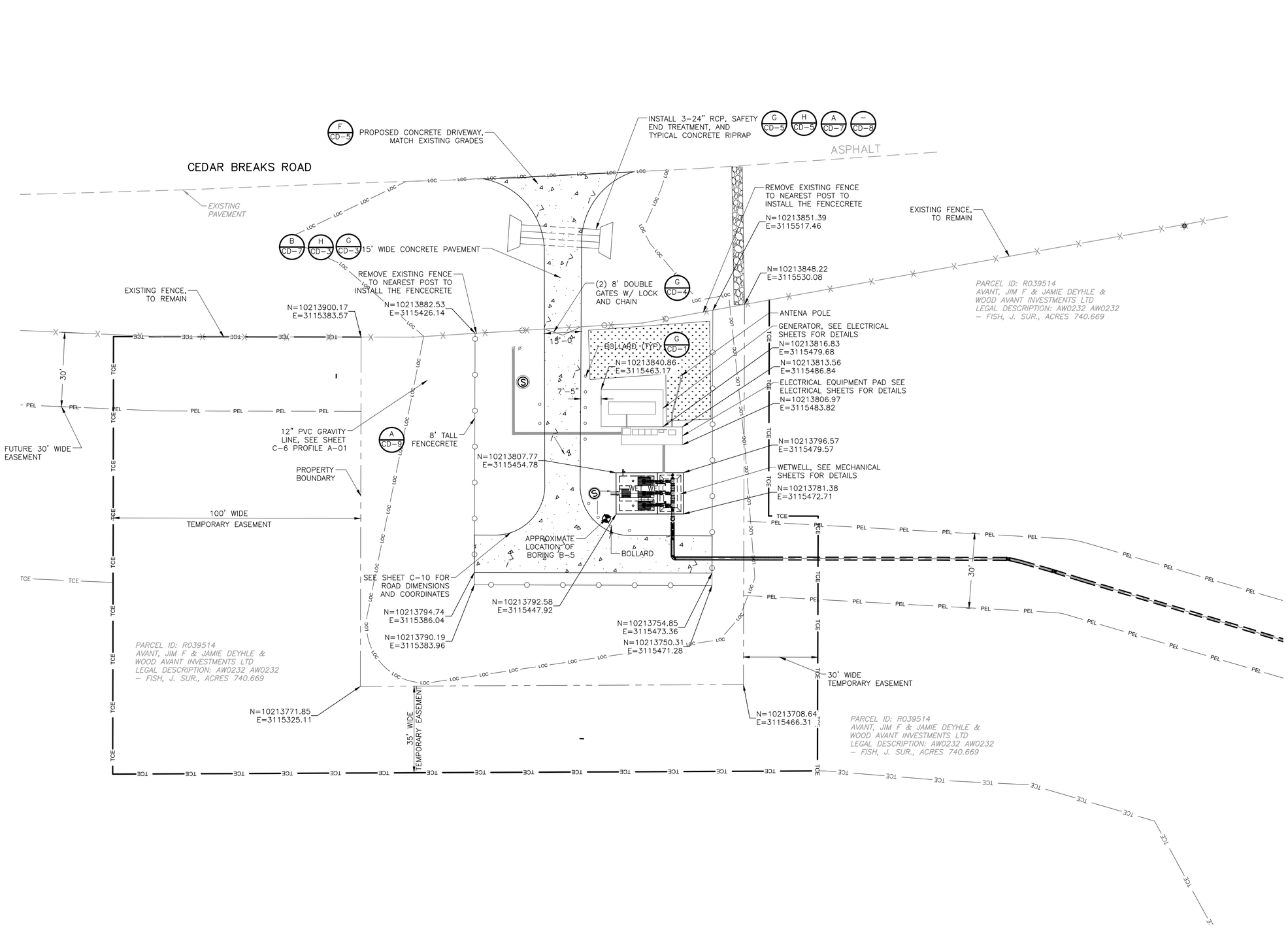

NOTES:

1. SEE SHEET G-6 FOR BENCHMARKS AND PROJECT COORDINATE SYSTEM.
2. SEE SHEET C-3 FOR LIMITS OF TEMPORARY CONSTRUCTION EASEMENT, AND EROSION CONTROL MEASURES.
3. SEE SHEET C-10 FOR GRADING.

PLAN
1" = 20'

STATE OF TEXAS
GERALD S. FURRIER
129811
LICENSED PROFESSIONAL ENGINEER
12/11/2023

REV. NO.	DATE	DRWN	CHKD	REMARKS

DESIGNED BY: A. KAJALE
DRAWN BY: M. MAHADEVAN
SHEET CHK'D BY: A. KAJALE
CROSS CHK'D BY: A. RHAMES
APPROVED BY: G. FURRIER
DATE: DECEMBER 2023

CDM Smith
8310-1 N Capital of Texas Hwy, Suite 250
Austin, TX 78731
Tel: (512) 346-1100
TBPELS Firm Registration No. F-3043

CITY OF GEORGETOWN, TEXAS

CEDAR BREAKS AND D B WOOD LIFT STATIONS

CEDAR BREAKS LIFT STATION
SITE PLAN

PROJECT NO. 2048-272644
FILE NAME: C002LSPL.DWG
SHEET NO.
C-2

XREFs: [CDMS_2234_W-SHADING, CDMS-003-SF INTERCEPTOR BRIDGE-FINAL-REV2, CEZ001SV, EWP001ST, CWP001YP, MWP001LS, SWP001LS, CWP001LS, CDMS_2234_South lake to South fork_Border] Images: []
Last saved by: MAKASHA Time: 10/30/2023 1:22:28 PM
pw:\\cdmsmith-a202-pw.bentley.com:pw_pit\2048\272644\04 Design Services NM_50%\02 Civil\10 BIM_CADD\Lift Stations\C002LSPL.dwg
©2023 CDM SMITH ALL RIGHTS RESERVED.
REUSE OF DOCUMENTS: THESE DOCUMENTS AND DESIGNS PROVIDED BY PROFESSIONAL SERVICE, INCORPORATED HEREIN, ARE THE PROPERTY OF CDM SMITH AND ARE NOT TO BE USED, IN WHOLE OR PART, FOR ANY OTHER PROJECT WITHOUT THE WRITTEN AUTHORIZATION OF CDM SMITH.
Plotted: 12/14/2023 12:36:58 PM

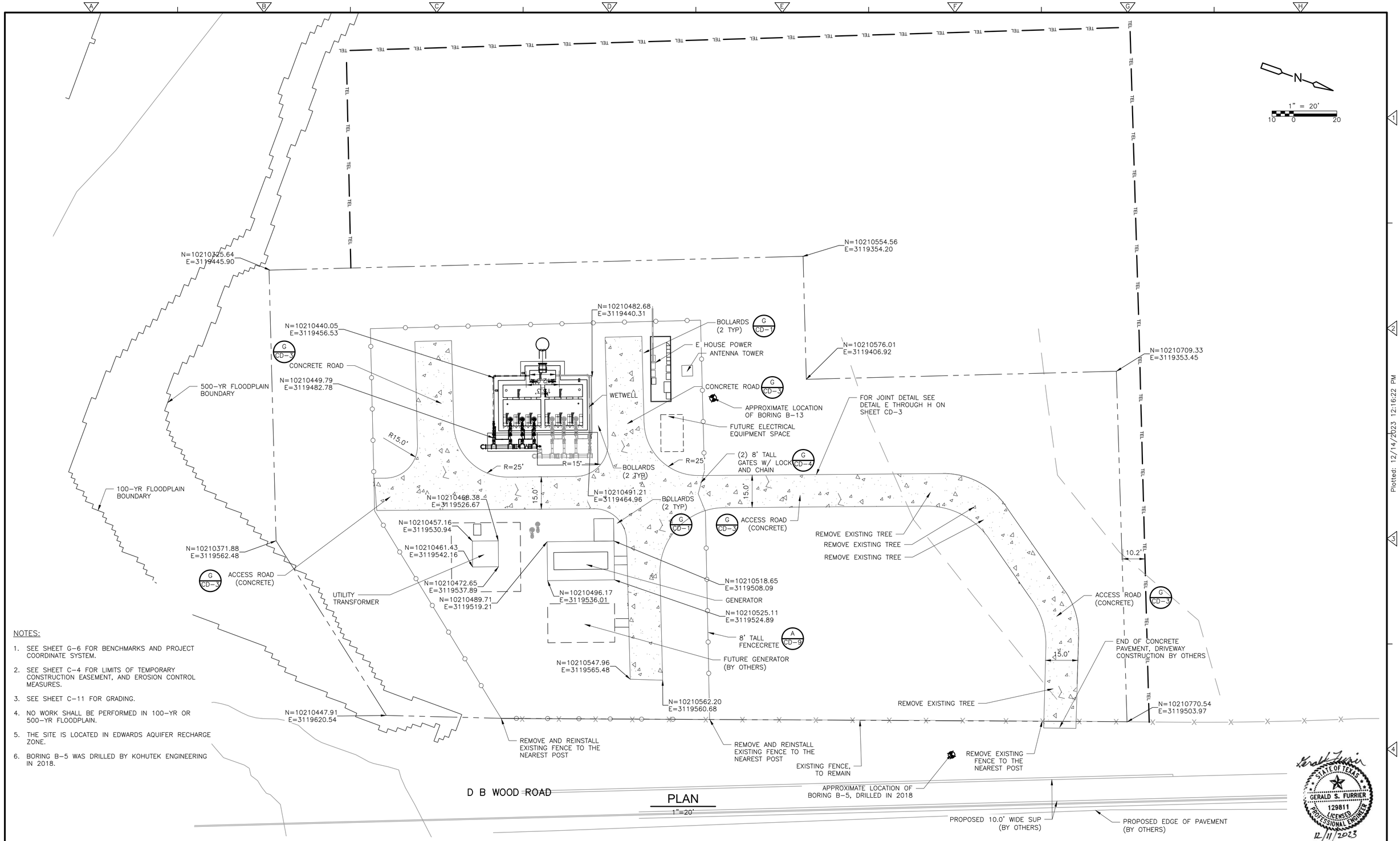

PLAN

1" = 20'

NOTES:

1. SEE SHEET G-6 FOR BENCHMARKS AND PROJECT COORDINATE SYSTEM.
2. SEE SHEET C-4 FOR LIMITS OF TEMPORARY CONSTRUCTION EASEMENT, AND EROSION CONTROL MEASURES.
3. SEE SHEET C-11 FOR GRADING.
4. NO WORK SHALL BE PERFORMED IN 100-YR OR 500-YR FLOODPLAIN.
5. THE SITE IS LOCATED IN EDWARDS AQUIFER RECHARGE ZONE.
6. BORING B-5 WAS DRILLED BY KOHUTEK ENGINEERING IN 2018.

REV. NO.	DATE	DRWN	CHKD	REMARKS

DESIGNED BY: A. KAJALE
DRAWN BY: M. KULKARNI
SHEET CHK'D BY: A. KAJALE
CROSS CHK'D BY: A RHAMES
APPROVED BY: G. FURRIER
DATE: DECEMBER 2023

CDM Smith
8310-1 N Capital of Texas Hwy, Suite 250
Austin, TX 78731
Tel: (512) 346-1100
TBPELS Firm Registration No. F-3043

CITY OF GEORGETOWN, TEXAS

CEDAR BREAKS AND D B WOOD LIFT STATIONS

D B WOOD LIFT STATION
SITE PLAN

PROJECT NO. 2048-272644
FILE NAME: C003STPL.DWG
SHEET NO.
C-3

XREFs: [CDMS_2234, CEP000SS, MWP002LS, EWP002ST, CEP002SS, SWP006EP, SWP002LS, CWP002LS, SWP004LS, CEP004SS, Vehicle tracking, DBW_MDF_ROW] Images: []
Last saved by: MAKASHA Time: 10/30/2023 7:22:11 PM
C:\pw_pt\mukashio\d3867734\C004YPPL.dwg
© 2023 CDM SMITH ALL RIGHTS RESERVED.
REUSE OF DOCUMENTS: THESE DOCUMENTS AND DESIGNS PROVIDED BY PROFESSIONAL SERVICE, INCORPORATED HEREIN, ARE THE PROPERTY OF CDM SMITH AND ARE NOT TO BE USED, IN WHOLE OR PART, FOR ANY OTHER PROJECT WITHOUT THE WRITTEN AUTHORIZATION OF CDM SMITH.
Plotted: 12/14/2023 12:16:22 PM

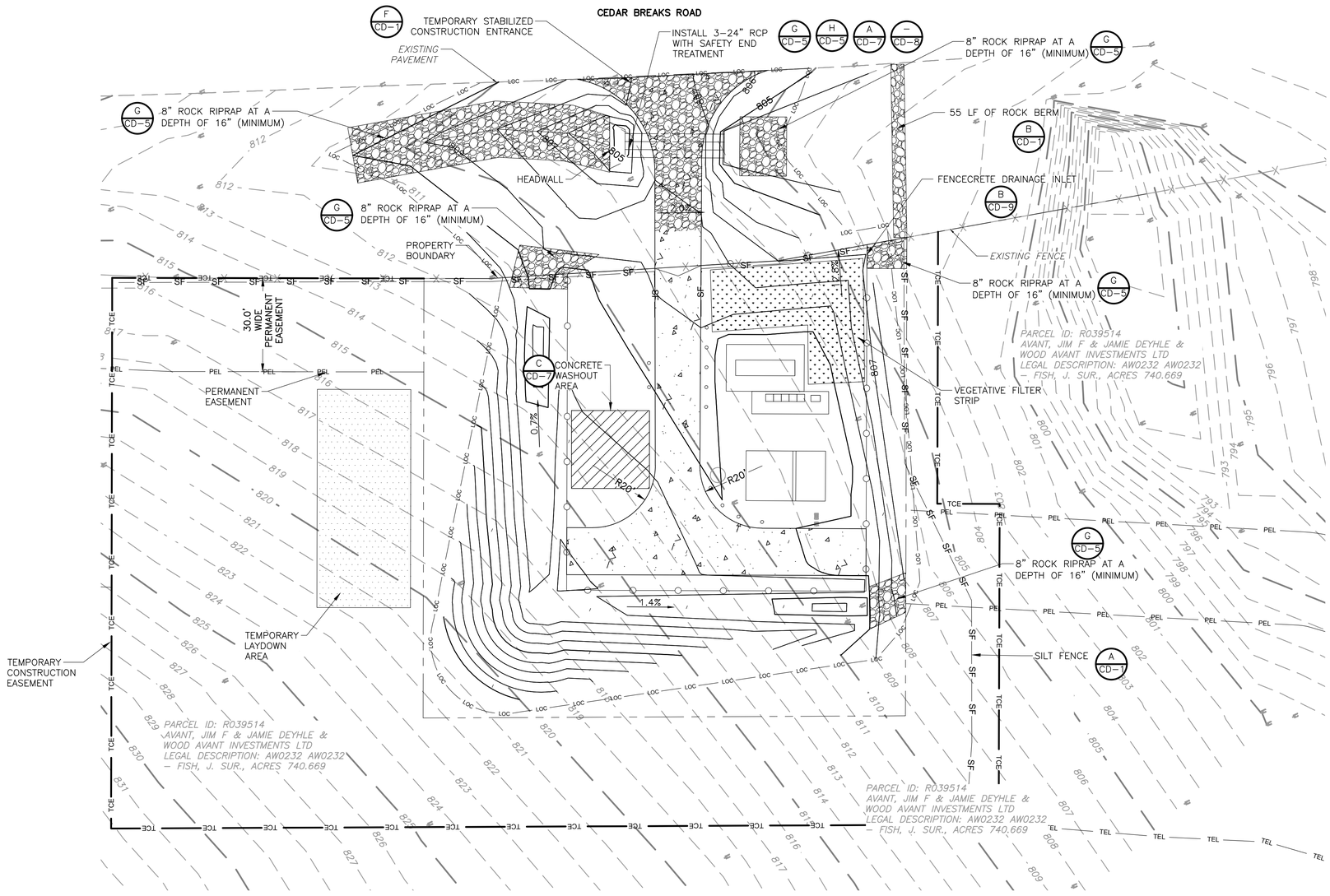

PLAN
1"=20'

NOTE:

1. THE SILT FENCEING AND TEMPORARY EROSION CONTROL MEASUREMENTS SHALL BE INSTALLED BY THE CONTRACTOR IN ACCORDANCE WITH THE CONTRACTOR'S SWPPP. CONTRACTOR ALSO SHALL INSTALL TEMPORARY SILT FENCING ON THE WEST AND SOUTH OF THE PROPERTY ON THE OUTSIDE OF THE FENCE LINE DURING THE FENCING INSTALLATION ACTIVITIES. AFTER THE FENCING IS INSTALLED, THE SILT FENCE SHALL BE INSTALLED AS SHOWN.
2. CONTRACTOR SHALL FIELD COORDINATE THE LOCATIONS OF THE CONTRACTOR LAYDOWN AREA(S), TRAIALER AREA(S), AND CONCRETE WASH DOWN AREA(S) WITH OWNER/OWNER REPRESENTATIVE. EXACT DIMENSIONS OF THE CONCRETE WASH SOWN AREA SHALL BE DETERMINED BY THE CONTRCTOR BASED ON THEIR POUR IMPLEMENTATION PLAN AND SUBMITTED TO THE OWNER /OWNER REPRESENTATIVE FOR REVIEW AND APPROVAL.
3. CONTRACTOR WILL BE RESPONSIBLE FOR KEEPING CEDAR BREAKS ROAD, D B WOOD ROAD, AND ADJACENT PROPERTIES FREE FROM SOIL, DEDIMENT, AND DEBRIS CREATED BY CONSTRUCTION ACTIVITY.
4. CONTRACTOR SHALL BE RESPONSIBLE FOR DUST CONTROL FOR THE SITE.
5. CONTRACTOR SHALL INSTALL ROCK BERM AT LOW POINT OF SILT FENCE.

STATE OF TEXAS
GERALD S. FURRIER
129811
LICENSED PROFESSIONAL ENGINEER
12/11/2023

REV. NO.	DATE	DRWN	CHKD	REMARKS

DESIGNED BY: A. KAJALE
DRAWN BY: M. KULKARNI
SHEET CHK'D BY: A. KAJALE
CROSS CHK'D BY: A. RHAMES
APPROVED BY: G. FURRIER
DATE: DECEMBER 2023

CDM Smith
8310-1 N Capital of Texas Hwy, Suite 250
Austin, TX 78731
Tel: (512) 346-1100
TBPELS Firm Registration No. F-3043

CITY OF GEORGETOWN, TEXAS

CEDAR BREAKS AND D B WOOD LIFT STATIONS

CEDAR BREAKS LIFT STATION
TEMPORARY AND PERMANENT EROSION AND SEDMEMTATION CONTROL PLAN

PROJECT NO. 2048-272644
FILE NAME: C004ESCP.DWG
SHEET NO.
C-4

XREFs: [CDMS_2234, W-SHADING, CDMS-003-SF INTERCEPTOR BRIDGE-FINAL-REV2, CEZ001SV, CEP0001, CWP001LS, CWP001YP, SWP001LS, EWP001ST, REVW_STAMP, CEP000SS] Images: []
Last saved by: KAJALEAN Time: 12/12/2023 11:07:46 PM
C:\pw_pl1\kajalean\d3867734\C004ESCP.dwg
© 2023 CDM SMITH ALL RIGHTS RESERVED.
REUSE OF DOCUMENTS: THESE DOCUMENTS AND DESIGNS PROVIDED BY PROFESSIONAL SERVICE, INCORPORATED HEREIN, ARE THE PROPERTY OF CDM SMITH AND ARE NOT TO BE USED, IN WHOLE OR PART, FOR ANY OTHER PROJECT WITHOUT THE WRITTEN AUTHORIZATION OF CDM SMITH.
Plotted: 12/14/2023 12:40:28 PM

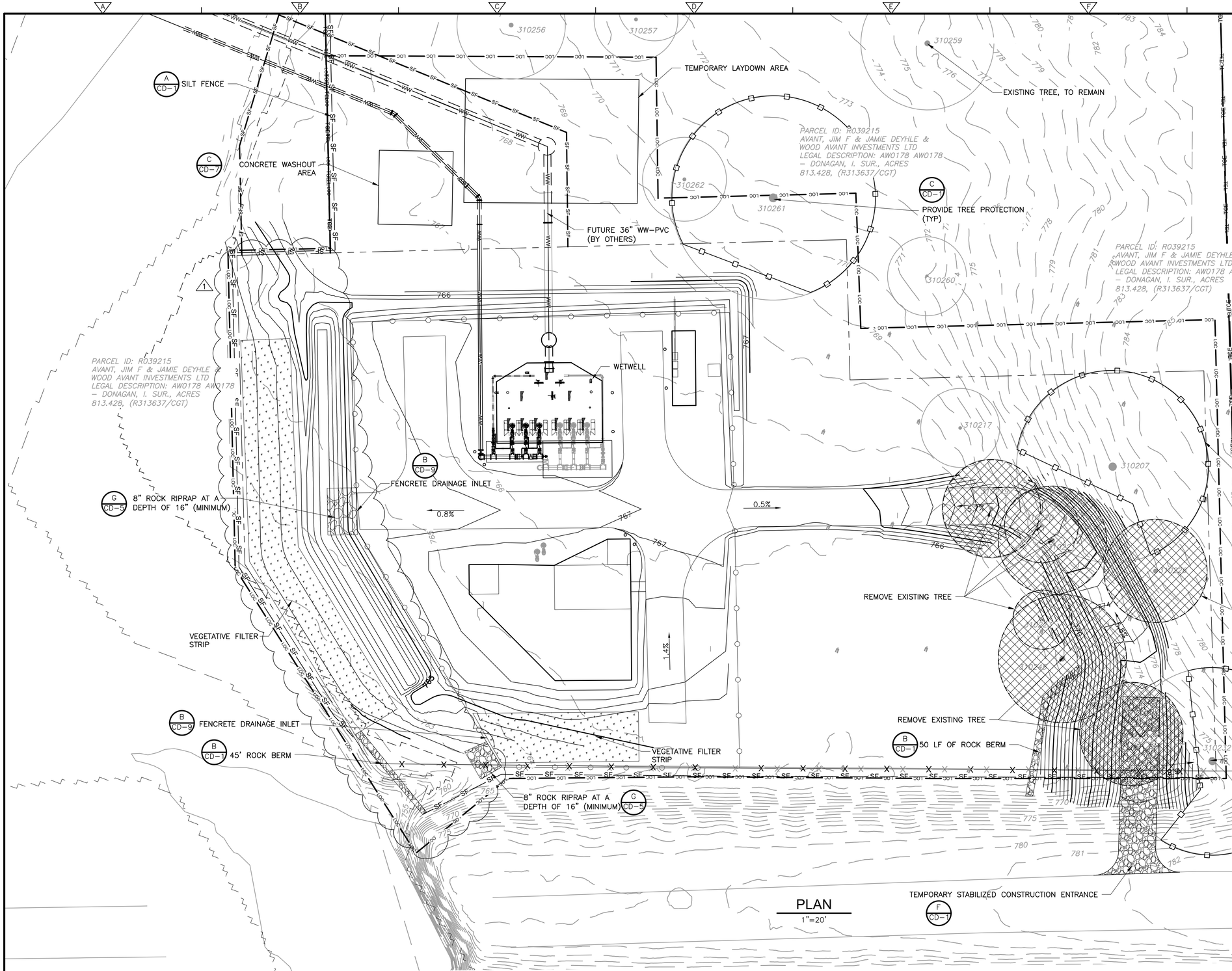

1" = 20'

NOTE:

1. THE SILT FENCING AND TEMPORARY EROSION CONTROL MEASUREMENTS SHALL BE INSTALLED BY THE CONTRACTOR IN ACCORDANCE WITH THE CONTRACTOR'S SWPPP. CONTRACTOR ALSO SHALL INSTALL TEMPORARY SILT FENCING ON THE WEST AND SOUTH OF THE PROPERTY ON THE OUTSIDE OF THE FENCE LINE DURING THE FENCING INSTALLATION ACTIVITIES. AFTER THE FENCING IS INSTALLED, THE SILT FENCE SHALL BE INSTALLED AS SHOWN.
2. CONTRACTOR SHALL FIELD COORDINATE THE LOCATIONS OF THE CONTRACTOR LAYDOWN AREA(S), TRAILER AREA(S), AND CONCRETE WASH DOWN AREA(S) WITH OWNER/OWNER REPRESENTATIVE. EXACT DIMENSIONS OF THE CONCRETE WASH SOWN AREA SHALL BE DETERMINED BY THE CONTRACTOR BASED ON THEIR POUR IMPLEMENTATION PLAN AND SUBMITTED TO THE OWNER /OWNER REPRESENTATIVE FOR REVIEW AND APPROVAL.
3. CONTRACTOR WILL BE RESPONSIBLE FOR KEEPING CEDAR BREAKS ROAD, D B WOOD ROAD, AND ADJACENT PROPERTIES FREE FROM SOIL, SEDIMENT, AND DEBRIS CREATED BY CONSTRUCTION ACTIVITY.
4. CONTRACTOR SHALL BE RESPONSIBLE FOR DUST CONTROL FOR THE SITE.
5. CONTRACTOR SHALL INSTALL ROCK BERM AT LOW POINT OF SILT FENCE.
6. TREES LESS THAN 6–INCHES DIAMETER ARE NOT SHOWN ON THE DRAWINGS.
7. (1) PRIOR TO CONSTRUCTION OF THE D B WOOD ACCESS DRIVE, CONTRACTOR SHALL FIELD VERIFY AND MATCH THE GRADE ELEVATION OF THE D B WOOD DRIVEWAY SECTION CONSTRUCTED BY OTHERS.

STATE OF TEXAS
GERALD S. FURRIER
129811
LICENSED PROFESSIONAL ENGINEER
12/11/2023

REV. NO.	DATE	DRWN	CHKD	REMARKS
1	1/9/24	AK	GF	ADDENDUM 2.

DESIGNED BY: A. KAJALE
DRAWN BY: S. DHANGAR
SHEET CHK'D BY: M. MAHADEVAN
CROSS CHK'D BY: A. RHAMES
APPROVED BY: G. FURRIER
DATE: DECEMBER 2023

CDM Smith
8310-1 N Capital of Texas Hwy, Suite 250
Austin, TX 78731
Tel: (512) 346-1100
TBPELS Firm Registration No. F-3043

CITY OF GEORGETOWN, TEXAS

CEDAR BREAKS AND D B WOOD LIFT STATIONS

D B WOOD LIFT STATION
TEMPORARY AND PERMANENT EROSION AND SEDIMENTATION CONTROL PLAN

PROJECT NO. 2048–272644
FILE NAME: C005ESCP.DWG

SHEET NO.
C-5

XREFs: [CDMS_2234, CEP000SS_1, CEP002SS, MWP002LS, SWP002LS, CWP002LS, EWP002ST, SWP004LS, CWP001YP, DBW_MDF_RDW, CWZ002GR, CEP000SS] Images: []
Last saved by: MAHADEVANM Time: 12/13/2023 1:34:02 PM
pw:\\cdmsmith-az02-pw.bentley.com:pw_pi1\2048\272644\04 Design Services NM_50%\02 Civil\10 BIM_CADD\Lift Stations\C005ESCP.dwg
©2023 CDM SMITH ALL RIGHTS RESERVED
REUSE OF DOCUMENTS: THESE DOCUMENTS AND DESIGNS PROVIDED BY PROFESSIONAL SERVICE, INCORPORATED HEREIN, ARE THE PROPERTY OF CDM SMITH AND ARE NOT TO BE USED, IN WHOLE OR PART, FOR ANY OTHER PROJECT WITHOUT THE WRITTEN AUTHORIZATION OF CDM SMITH.

Plotted: 5/16/2024 4:58:49 PM

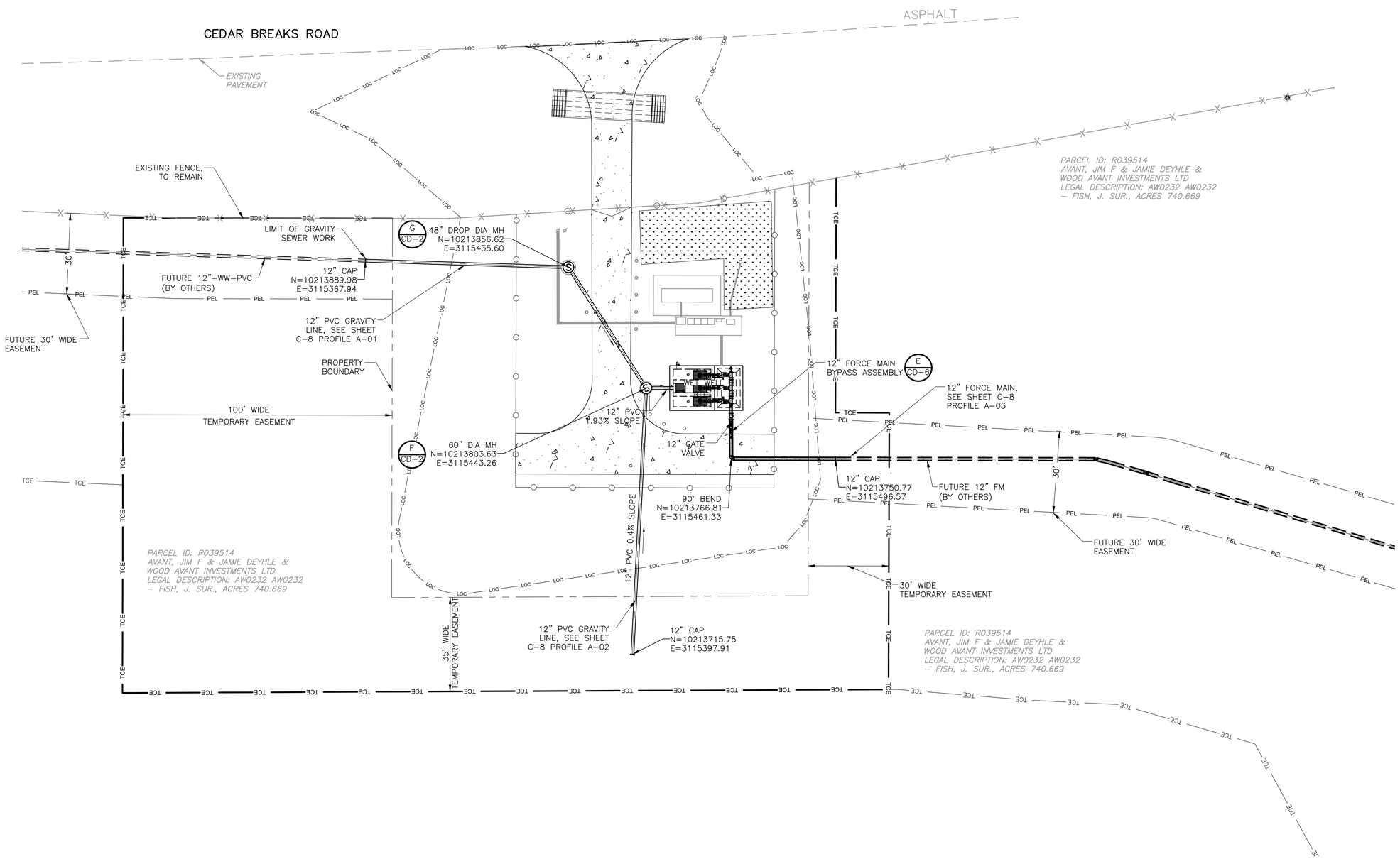

NOTES:

1. ALL FORCE MAIN PIPE, VALVES AND FITTINGS SHALL BE RESTRAINED.
2. INSTALL 12 INCH CAP AS WELL AS AN INDICATOR FOR THE PIPE LOCATION IF THE PROPOSED GRAVITY LINE AND FORCE MAIN IS NOT INSTALLED.
3. SEE SHEET C-8 FOR THE GRAVITY AND FORCE MAIN PROFILES.
4. SEE SHEET G-6 FOR BENCHMARKS AND PROJECT COORDINATE SYSTEM.
5. SEE SHEET C-4 FOR LIMITS OF TEMPORARY CONSTRUCTION EASEMENT, AND EROSION CONTROL MEASURES.
6. SEE SHEET C-10 FOR GRADING.

PLAN
1" = 20'

STATE OF TEXAS
GERALD S. FURRIER
129811
LICENSED
PROFESSIONAL ENGINEER
12/11/2023

REV. NO.	DATE	DRWN	CHKD	REMARKS

DESIGNED BY: A. KAJALE
DRAWN BY: M. MAHADEVAN
SHEET CHK'D BY: A. KAJALE
CROSS CHK'D BY: A. RHAMES
APPROVED BY: G. FURRIER
DATE: DECEMBER 2023

CDM Smith
8310-1 N Capital of Texas Hwy, Suite 250
Austin, TX 78731
Tel: (512) 346-1100
TBPELS Firm Registration No. F-3043

CITY OF GEORGETOWN, TEXAS

CEDAR BREAKS AND D B WOOD LIFT STATIONS

CEDAR BREAKS LIFT STATION
YARD PIPING PLAN

PROJECT NO. 2048-272644
FILE NAME: C006LSPL.DWG
SHEET NO.
C-6

XREFs: [CDMS_2234, W-SHADING, CDMS-003-SF INTERCEPTOR BRIDGE-FINAL-REV2, CEZ001SV, EWP001ST, CWP001YP, MWP001LS, CWP001LS, SWP001LS, CEP000SS, CWP001GR, CDMS_2234_South lake to South fork_Border] Images: []
Last saved by: MAKASHIA Time: 10/30/2023 1:22:28 PM
pw:\\cdmsmith-pw02-pw.bentley.com:pw_pi1\2048\272644\04 Design Services NM_50%\02 Civil\10 BIM_CADD\Lift Stations\C002LSPL.dwg
© 2023 CDM SMITH ALL RIGHTS RESERVED
REUSE OF DOCUMENTS: THESE DOCUMENTS AND DESIGNS PROVIDED BY PROFESSIONAL SERVICE, INCORPORATED HEREIN, ARE THE PROPERTY OF CDM SMITH AND ARE NOT TO BE USED, IN WHOLE OR PART, FOR ANY OTHER PROJECT WITHOUT THE WRITTEN AUTHORIZATION OF CDM SMITH.

Plotted: 12/14/2023 12:01:47 PM

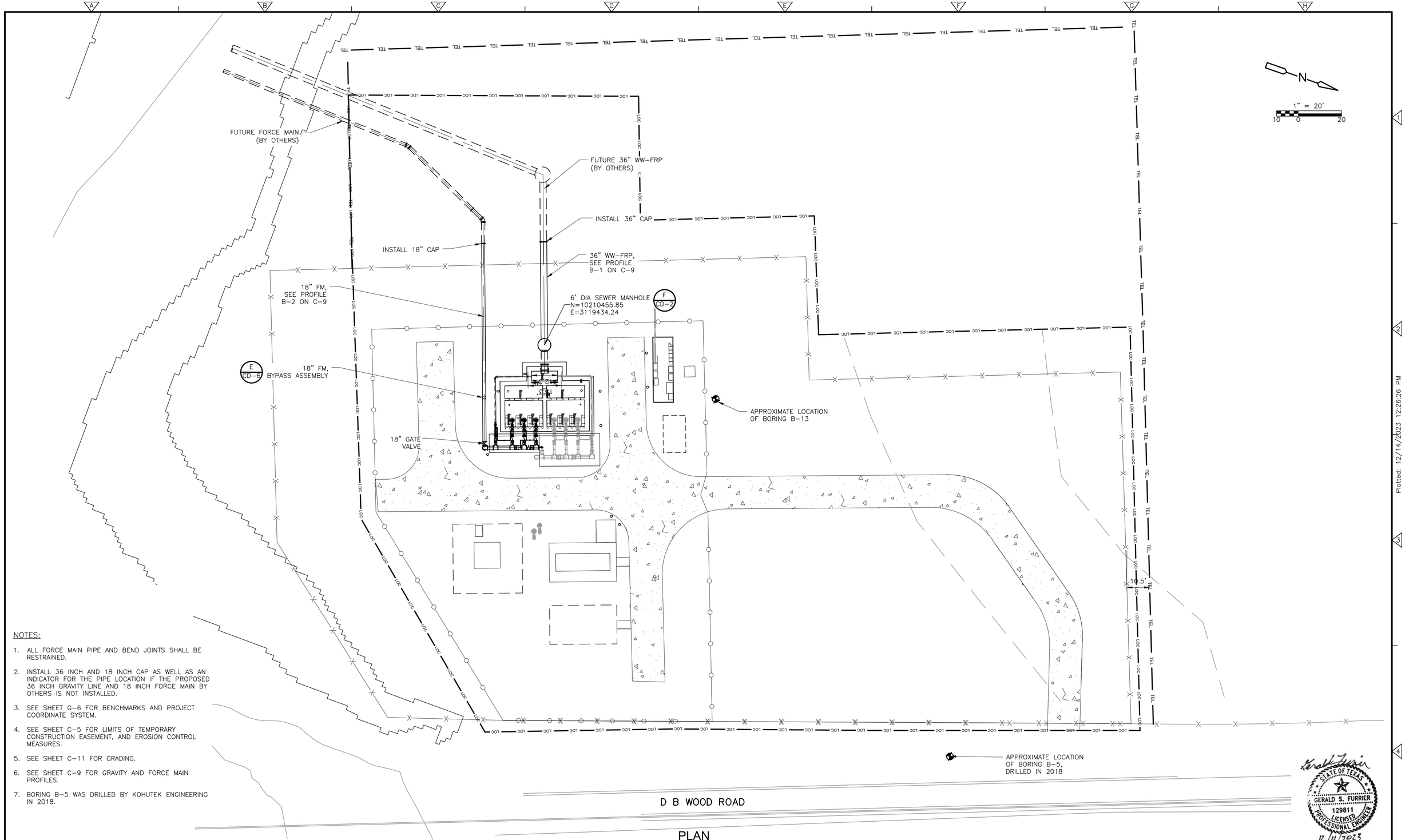

NOTES:

1. ALL FORCE MAIN PIPE AND BEND JOINTS SHALL BE RESTRAINED.
2. INSTALL 36 INCH AND 18 INCH CAP AS WELL AS AN INDICATOR FOR THE PIPE LOCATION IF THE PROPOSED 36 INCH GRAVITY LINE AND 18 INCH FORCE MAIN BY OTHERS IS NOT INSTALLED.
3. SEE SHEET G-6 FOR BENCHMARKS AND PROJECT COORDINATE SYSTEM.
4. SEE SHEET C-5 FOR LIMITS OF TEMPORARY CONSTRUCTION EASEMENT, AND EROSION CONTROL MEASURES.
5. SEE SHEET C-11 FOR GRADING.
6. SEE SHEET C-9 FOR GRAVITY AND FORCE MAIN PROFILES.
7. BORING B-5 WAS DRILLED BY KOHUTEK ENGINEERING IN 2018.

PLAN
1"=20'

STATE OF TEXAS
GERALD S. FURRIER
129811
LICENSED PROFESSIONAL ENGINEER
12/11/2023

REV. NO.	DATE	DRWN	CHKD	REMARKS

DESIGNED BY: A. KAJALE
DRAWN BY: M. KULKARNI
SHEET CHK'D BY: A. KAJALE
CROSS CHK'D BY: A RHAMES
APPROVED BY: G. FURRIER
DATE: DECEMBER 2023

CDM Smith
8310-1 N Capital of Texas Hwy, Suite 250
Austin, TX 78731
Tel: (512) 346-1100
TBPELS Firm Registration No. F-3043

CITY OF GEORGETOWN, TEXAS

CEDAR BREAKS AND D B WOOD LIFT STATIONS

D B WOOD LIFT STATION
YARD PIPING PLAN

PROJECT NO. 2048-272644
FILE NAME: C007YPPL.DWG
SHEET NO.
C-7

XREFs: [CDMS_2234, CEP0005S, MWP0002LS, EWP0002ST, CEP0002SS, SWP0006EP, SWP0002LS, CWP0002LS, SWP0041LS, CEP0041SS, Vehicle tracking, DBW_MDF_RDW] Images: []
Last saved by: MAKASHA Time: 10/30/2023 7:22:11 PM
C:\pw_pt\mukasha\3867734\C004YPPL.dwg
© 2023 CDM SMITH ALL RIGHTS RESERVED
REUSE OF DOCUMENTS: THESE DOCUMENTS AND DESIGNS PROVIDED BY PROFESSIONAL SERVICE, INCORPORATED HEREIN, ARE THE PROPERTY OF CDM SMITH AND ARE NOT TO BE USED, IN WHOLE OR PART, FOR ANY OTHER PROJECT WITHOUT THE WRITTEN AUTHORIZATION OF CDM SMITH.

Plotted: 12/14/2023 12:26:26 PM

1" = 20'
10 0 20
1" = 5'
2.5 0 5

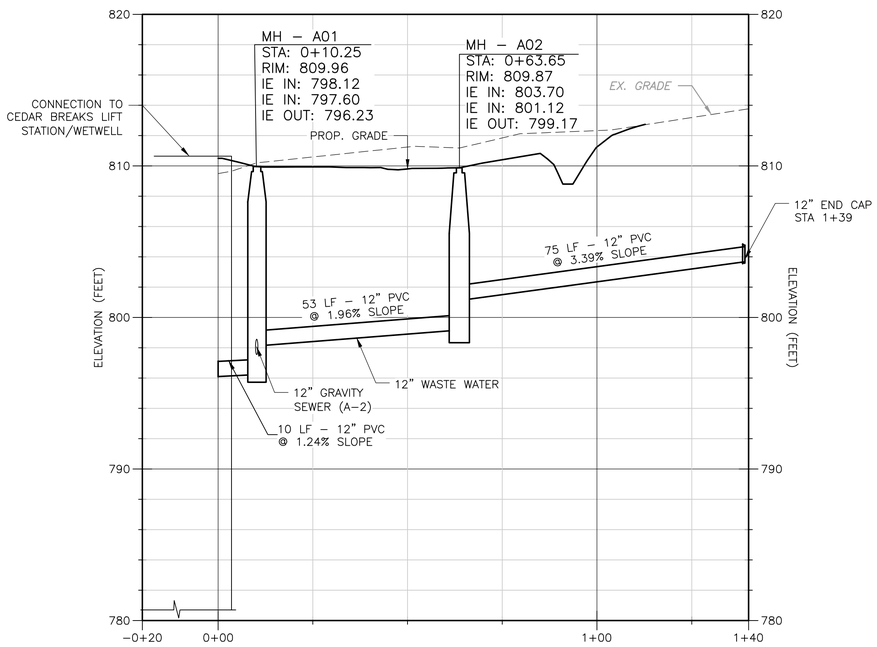

GRAVITY NETWORK PROFILE (A–01)
HOR 1" = 20'
VERT 1" = 5'

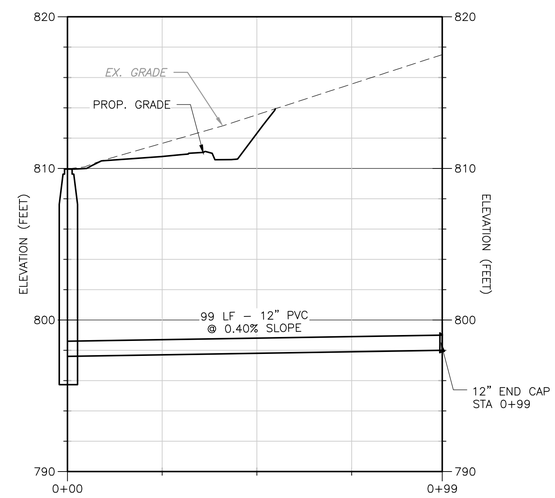

GRAVITY NETWORK PROFILE (A–02)
HOR 1" = 20'
VERT 1" = 5'

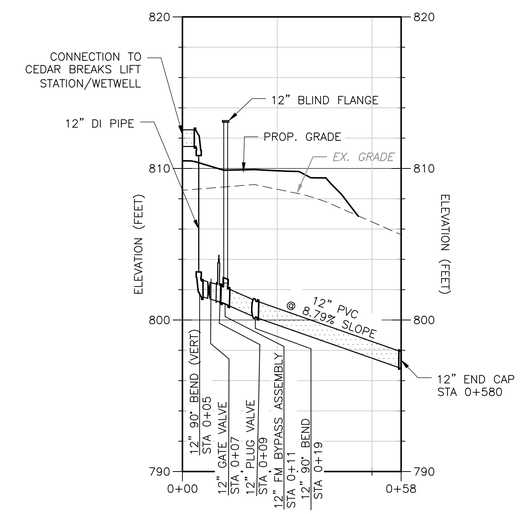

PRESSURE NETWORK PROFILE (A–03)
HOR 1" = 20'
VERT 1" = 5'

STATE OF TEXAS
GERALD S. FURRIER
129811
LICENSED
PROFESSIONAL ENGINEER
12/11/2023

REV. NO.	DATE	DRWN	CHKD	REMARKS

DESIGNED BY: L. VIDYAVATHI
DRAWN BY: M. MAHADEVAN
SHEET CHK'D BY: A. KAJALE
CROSS CHK'D BY: A. RHAMES
APPROVED BY: G. FURRIER
DATE: DECEMBER 2023

CDM Smith
8310-1 N Capital of Texas Hwy, Suite 250
Austin, TX 78731
Tel: (512) 346-1100
TBPELS Firm Registration No. F-3043

CITY OF GEORGETOWN, TEXAS

CEDAR BREAKS AND D B WOOD LIFT STATIONS

CEDAR BREAKS LIFT STATION
YARD PIPING PROFILE

PROJECT NO. 2048–272644
FILE NAME: C008YPPR.DWG
SHEET NO.
C-8

XREFs: [CDMS_2234, W-SHADING, CDMS-003-SF INTERCEPTOR BRIDGE-FINAL-REV2, CEZ001SV, EWP001ST, CWP001YP, SWP001LS, MWP001LS, CWP001LS, CWP002LS] Images: []
Last saved by: KAJALEAN Time: 12/13/2023 2:46:22 PM
C:\pw_pr1\kajalean\d386773A\C008YPPR.dwg
©2023 CDM SMITH ALL RIGHTS RESERVED.
REUSE OF DOCUMENTS: THESE DOCUMENTS AND DESIGNS PROVIDED BY PROFESSIONAL SERVICE, INCORPORATED HEREIN, ARE THE PROPERTY OF CDM SMITH AND ARE NOT TO BE USED, IN WHOLE OR PART, FOR ANY OTHER PROJECT WITHOUT THE WRITTEN AUTHORIZATION OF CDM SMITH.

Plotted: 12/14/2023 12:02:20 PM

1" = 20'
10 0 20
1" = 5'
2.5 0 5

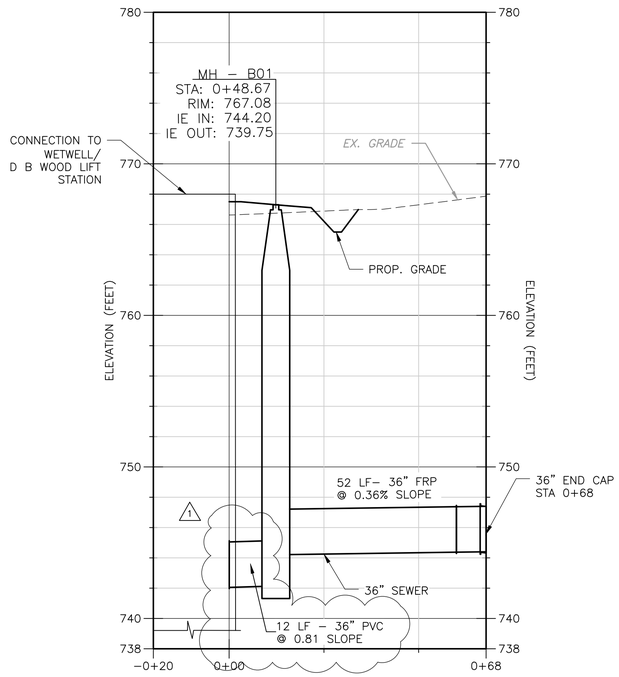

GRAVITY NETWORK PROFILE (B–1)
HOR 1" = 20'
VERT 1" = 5'

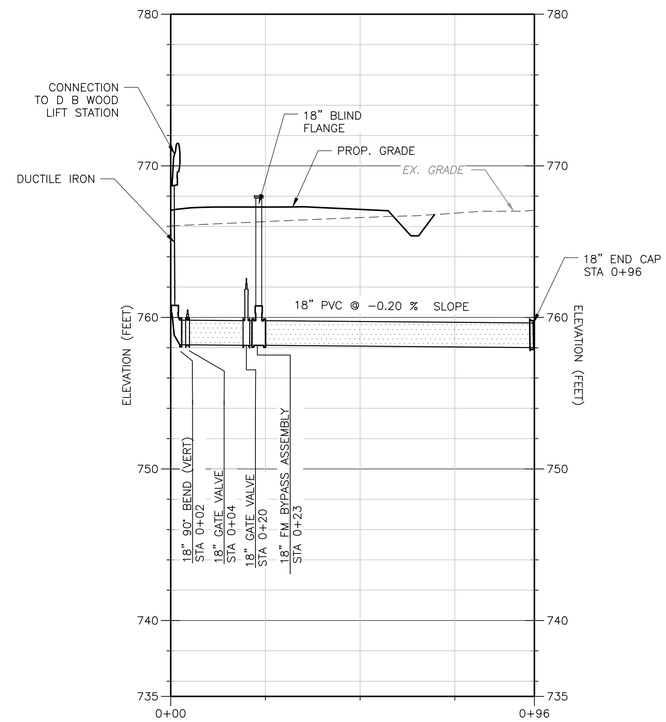

PRESSURE NETWORK PROFILE (B–2)
HOR 1" = 20'
VERT 1" = 5'

STATE OF TEXAS
GERALD S. FURRIER
129811
LICENSED
PROFESSIONAL ENGINEER
12/11/2023

REV. NO.	DATE	DRWN	CHKD	REMARKS
1	1/9/24	AK	GF	ADDENDUM 2

DESIGNED BY: L. VIDYAVATHI
DRAWN BY: M. MAHADEVAN
SHEET CHK'D BY: A. KAJALE
CROSS CHK'D BY: A. RHAMES
APPROVED BY: G. FURRIER
DATE: DECEMBER 2023

CDM Smith
8310-1 N Capital of Texas Hwy, Suite 250
Austin, TX 78731
Tel: (512) 346-1100
TBPELS Firm Registration No. F-3043

CITY OF GEORGETOWN, TEXAS

CEDAR BREAKS AND D B WOOD LIFT STATIONS

D B WOOD LIFT STATION
YARD PIPING PROFILE

PROJECT NO. 2048–272644
FILE NAME: C009YPPR.DWG

SHEET NO.
C-9

Plotted: 5/17/2024 11:48:13 AM

XREFs: [CDMS_2234, W-SHADING, CDMS-003-SF INTERCEPTOR BRIDGE-FINAL-REV2, CEZ001SV, ENP001ST, CWP001YP, SWP001LS, MWP001LS, CWP001LS, CWP002LS] Images: []
Last saved by: COYLEZ Time: 5/17/2024 11:47:30 AM
pw:\\cdmsmith-az02-pw.bentley.com:pw_pi\2048\272644\04 Design Services NM_50%\02 Civil\10 BIM_CADD\Lift Stations\C009YPPR.dwg
© 2023 CDM SMITH ALL RIGHTS RESERVED.
REUSE OF DOCUMENTS: THESE DOCUMENTS AND DESIGNS PROVIDED BY PROFESSIONAL SERVICE, INCORPORATED HEREIN, ARE THE PROPERTY OF CDM SMITH AND ARE NOT TO BE USED, IN WHOLE OR PART, FOR ANY OTHER PROJECT WITHOUT THE WRITTEN AUTHORIZATION OF CDM SMITH.

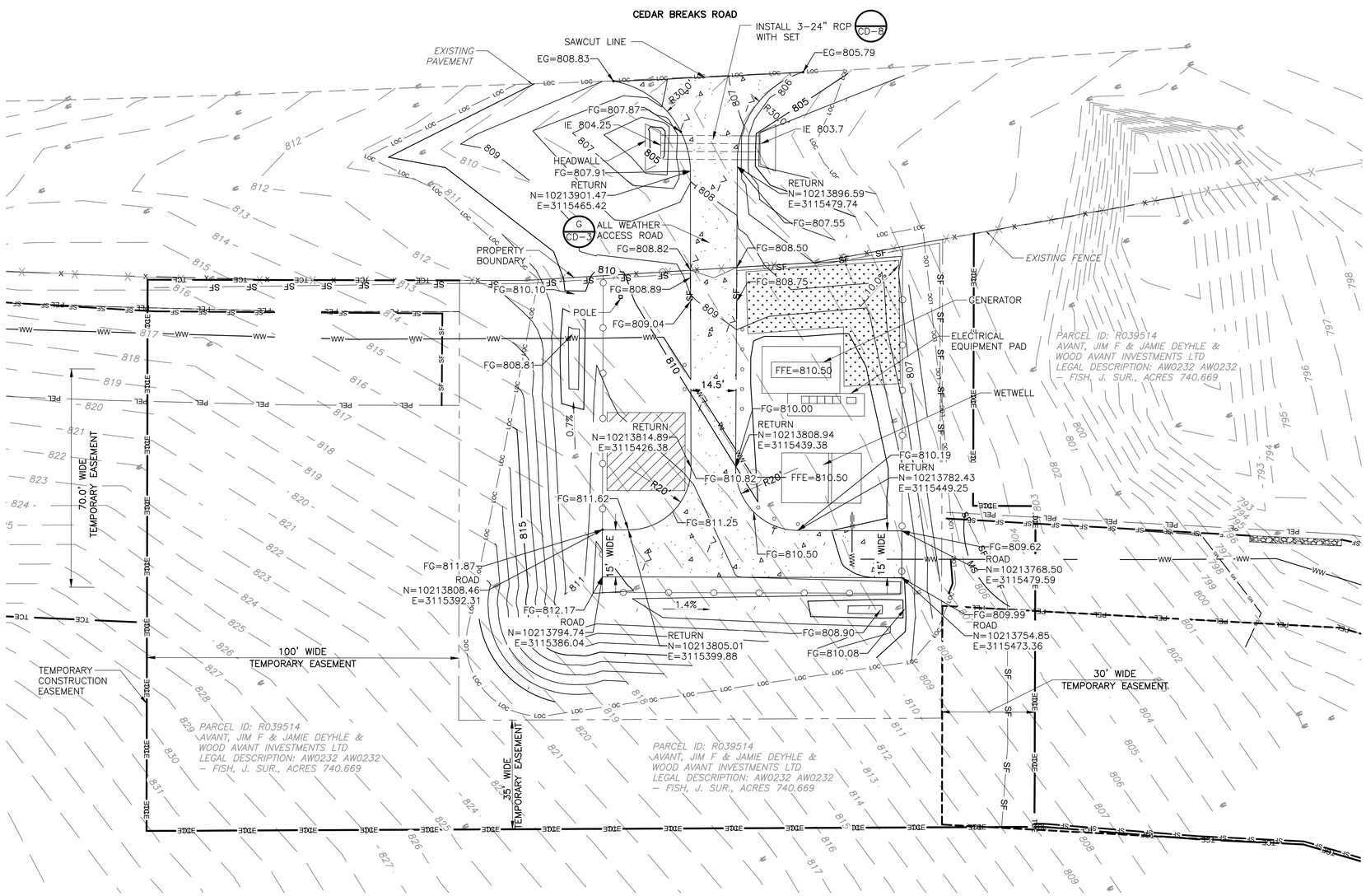

PLAN
1"=20'

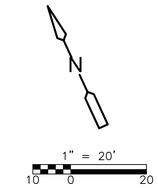

NOTE:

1. FOR EXPANSION JOINT, CONTRACTION JOINT, CONCRETE PAVING SECTION, AND CONSTRUCTION JOINT DETAILS, SEE DETAIL E THROUGH H ON SHEET CD-3.
2. CONTRACTOR SHALL INSTALL A GEOTEXTILE (WEED BARRIER) AND 4" THICK MINIMUM NO. 57 CRUSHED STONE SURFACE FOR ALL AREAS WITHIN THE FENCECRETE FENCE AND OUTSIDE OF STRUCTURES.
3. PRIOR TO CONSTRUCTION OF THE DRIVEWAY AT THE CEDAR BREAKS ROAD LIFT STATION, THE CONTRACTOR SHALL PREPARE AND SUBMIT A TRAFFIC CONTROL PLAN TO THE ENGINEER FOR REVIEW.

LEGENDS:

EG EXISTING GRADE
FG FINISHED GRADE

STATE OF TEXAS
GERALD S. FURRIER
129811
LICENSED PROFESSIONAL ENGINEER
12/11/2023

REV. NO.	DATE	DRWN	CHKD	REMARKS
1	1/9/24	AK	GF	ADDENDUM 2.

DESIGNED BY: A. KAJALE
DRAWN BY: S. DHANGAR
SHEET CHK'D BY: M. MAHADEVAN
CROSS CHK'D BY: A. RHAMES
APPROVED BY: G. FURRIER
DATE: DECEMBER 2023

CDM Smith
8310-1 N Capital of Texas Hwy, Suite 250
Austin, TX 78731
Tel: (512) 346-1100
TBPELS Firm Registration No. F-3043

CITY OF GEORGETOWN, TEXAS
CEDAR BREAKS AND D B WOOD LIFT STATIONS

CEDAR BREAKS LIFT STATION
PAVING AND GRADING PLAN

PROJECT NO. 2048-272644
FILE NAME: C010GRPL.DWG
SHEET NO.
C-10

Plotted: 5/16/2024 5:46:51 PM

XREFs: [CDMS_2234, W-SHADING, CDMS-003-SF INTERCEPTOR BRIDGE-FINAL-REV2, CEZ001SV, CEP0001, CWP001LS, CWP001YP, SWP001LS, EWP001ST, REVW_STAMP, CEP000SS] Images: []
Last saved by: KAJALEAN Time: 4/26/2024 10:31:35 AM
C:\pw_pl1\kajalean\d3867734\C010GRPL.dwg
©2023 CDM SMITH ALL RIGHTS RESERVED.
REUSE OF DOCUMENTS: THESE DOCUMENTS AND DESIGNS PROVIDED BY PROFESSIONAL SERVICE, INCORPORATED HEREIN, ARE THE PROPERTY OF CDM SMITH AND ARE NOT TO BE USED, IN WHOLE OR PART, FOR ANY OTHER PROJECT WITHOUT THE WRITTEN AUTHORIZATION OF CDM SMITH.

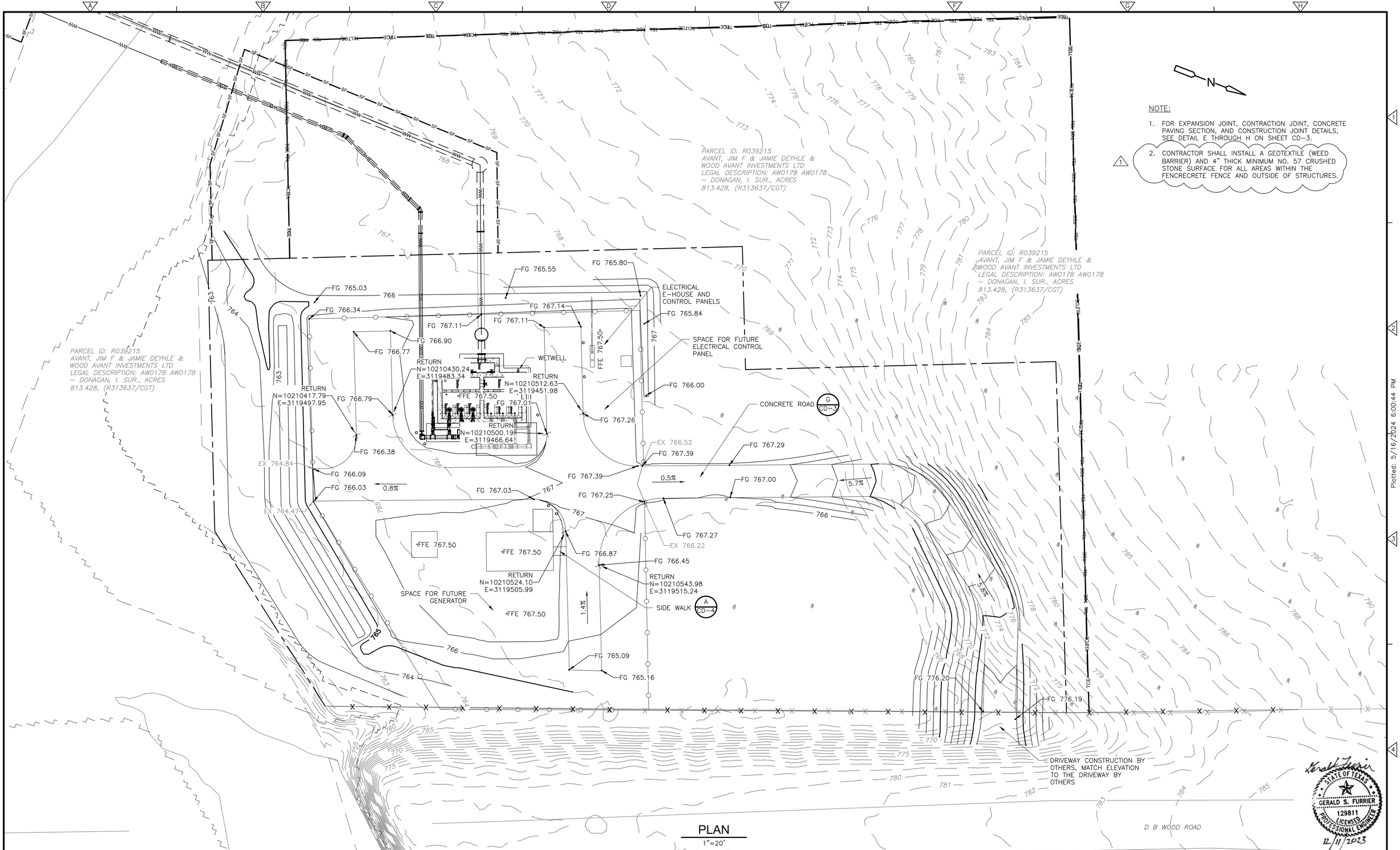

NOTE:

1. FOR EXPANSION JOINT, CONTRACTION JOINT, CONCRETE PAVING SECTION, AND CONSTRUCTION JOINT DETAILS, SEE DETAIL E THROUGH H ON SHEET CD-3.
2. CONTRACTOR SHALL INSTALL A GEOTEXTILE (WEED BARRIER) AND 4" THICK MINIMUM NO. 57 CRUSHED STONE SURFACE FOR ALL AREAS WITHIN THE FENCRECRETE FENCE AND OUTSIDE OF STRUCTURES.

PLAN
1"=20'

STATE OF TEXAS
GERALD S. FURRIER
129811
LICENSED
PROFESSIONAL ENGINEER
12/11/2023

REV. NO.	DATE	DRWN	CHKD	REMARKS
1	1/9/24	AK	GF	ADDENDUM 2.

DESIGNED BY: A. KAJALE
DRAWN BY: S. BHAKARI
SHEET CHK'D BY: M. MAHADEVAN
CROSS CHK'D BY: A. RHAMES
APPROVED BY: G. FURRIER
DATE: DECEMBER 2023

CDM Smith
8310-1 N Capital of Texas Hwy, Suite 250
Austin, TX 78731
Tel: (512) 346-1100
TBPELS Firm Registration No. F-3043

CITY OF GEORGETOWN, TEXAS

CEDAR BREAKS AND D B WOOD LIFT STATIONS

D B WOOD LIFT STATION
PAVING AND GRADING PLAN

PROJECT NO. 2048-272644
FILE NAME: C011GRPL.DWG
SHEET NO.
C-11

XREFs: [CDMS_2234, CEP000SS_1, CEP002SS, MWP002LS, SWP002LS, CWP002LS, EWP002ST, SWP004LS, CWP001YP, DBW_MDF_RDW, CWZ002GR, CEP000SS, CDMS-003-S Lake to SF Interceptor-TOPO-SURF] Images: []
Last saved by: KAJALEAN Time: 4/26/2024 10:47:08 AM
C:\pw_pl1\kajalean\d3867734\C011GRPL.dwg
©2023 CDM SMITH ALL RIGHTS RESERVED.
REUSE OF DOCUMENTS: THESE DOCUMENTS AND DESIGNS PROVIDED BY PROFESSIONAL SERVICE, INCORPORATED HEREIN, ARE THE PROPERTY OF CDM SMITH AND ARE NOT TO BE USED, IN WHOLE OR PART, FOR ANY OTHER PROJECT WITHOUT THE WRITTEN AUTHORIZATION OF CDM SMITH.

Plotted: 5/16/2024 6:00:44 PM

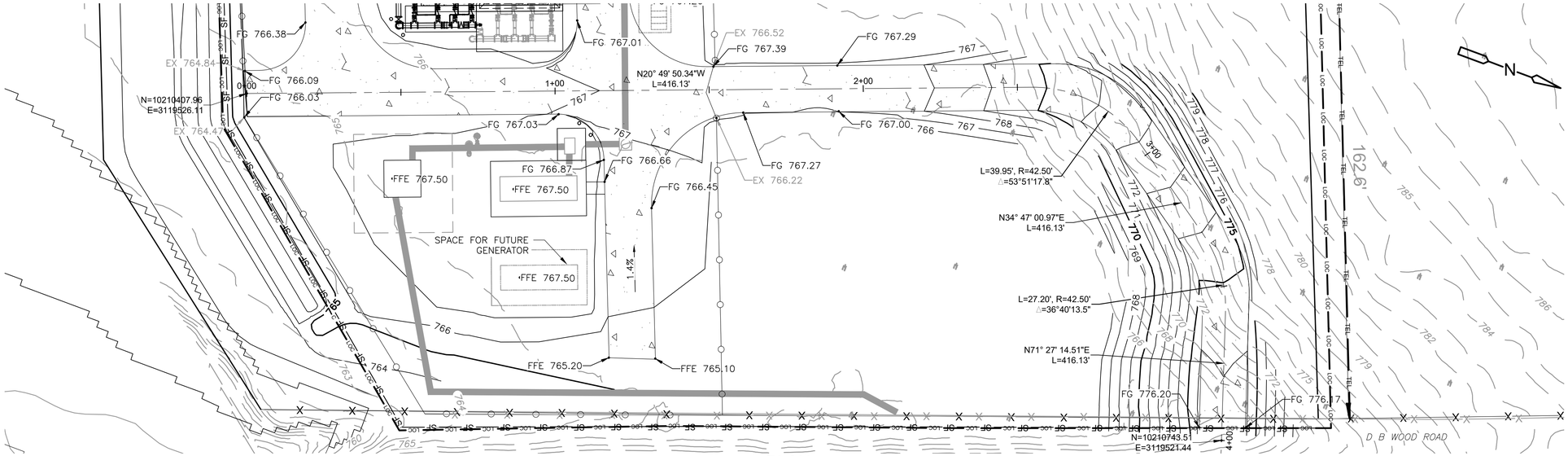

PLAN

1"=20'

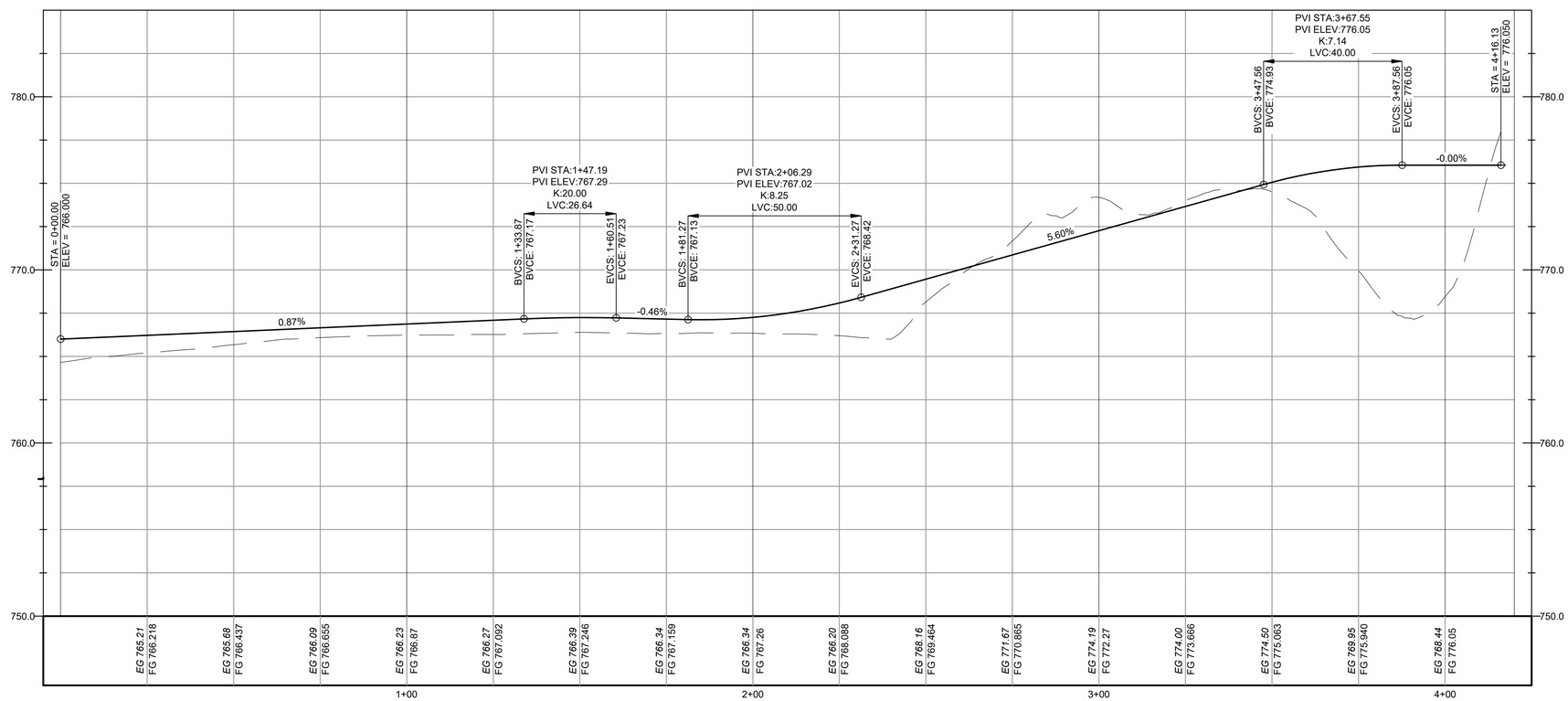

PROFILE

V 1" = 4'
H 1" = 20'

STATE OF TEXAS
GERALD S. FURRIER
129811
LICENSED
PROFESSIONAL ENGINEER
12/11/2023

REV. NO.	DATE	DRWN	CHKD	REMARKS

DESIGNED BY: A. KAJALE
DRAWN BY: M. KULKARNI
SHEET CHK'D BY: M. MAHADEVAN
CROSS CHK'D BY: A. RHAMES
APPROVED BY: G. FURRIER
DATE: DECEMBER 2023

CDM Smith
8310-1 N Capital of Texas Hwy, Suite 250
Austin, TX 78731
Tel: (512) 346-1100
TBPELS Firm Registration No. F-3043

CITY OF GEORGETOWN, TEXAS

CEDAR BREAKS AND D B WOOD LIFT STATIONS

D B WOOD LIFT STATION
PAVING PLAN

PROJECT NO. 2048-272644
FILE NAME: C012PVPP.DWG
SHEET NO.
C-12

XREFs: [CDMS_2234, CEP000SS_1, CEP002SS, MWP002LS, SWP002LS, CWP002LS, EWP002ST, SWP004LS, CWP001YP, CEP000SS, CWZ002GR, CEP004SS] Images: []
Last saved by: BOCANEGRAA Time: 12/14/2023 11:30:48 AM
pw:\\cdmsmith-az02-pw.bentley.com:pw_pl1\2048\272644\04 Design Services NM_50%\02 Civil\10 BIM_CADD\Lift Stations\C012PVPP.dwg
©2023 CDM SMITH ALL RIGHTS RESERVED.
REUSE OF DOCUMENTS: THESE DOCUMENTS AND DESIGNS PROVIDED BY PROFESSIONAL SERVICE, INCORPORATED HEREIN, ARE THE PROPERTY OF CDM SMITH AND ARE NOT TO BE USED, IN WHOLE OR PART, FOR ANY OTHER PROJECT WITHOUT THE WRITTEN AUTHORIZATION OF CDM SMITH.

Plotted: 12/14/2023 12:51:50 PM

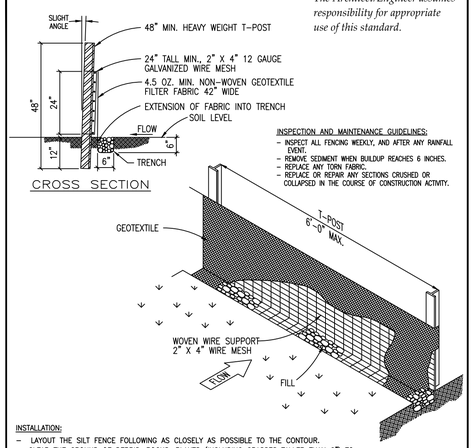

INSPECTION AND MAINTENANCE GUIDELINES:
- INSPECT ALL FENCING WEEKLY, AND AFTER ANY RAINFALL EVENT.
- REMOVE SEDIMENT WHEN BUILDUP REACHES 6 INCHES.
- REPLACE ANY TORN FABRIC.
- REPLACE OR REPAIR ANY SECTIONS CRUSHED OR COLLAPSED IN THE COURSE OF CONSTRUCTION ACTIVITY.

INSTALLATION:
- LAYOUT THE SILT FENCE FOLLOWING AS CLOSELY AS POSSIBLE TO THE CONTOUR.
- CLEAR THE GROUND OF DEBRIS, ROCKS, PLANTS (INCLUDING GRASSES TALLER THAN 2") TO PROVIDE A SMOOTH FLOW APPROACH SURFACE. EXCAVATE 6" DEEP X 6" WIDE TRENCH ON UPSTREAM SIDE OF FACE PER PLANS.
- DRIVE THE HEAVY DUTY T-POST AT LEAST 12 INCHES INTO THE GROUND AND AT A SLIGHT ANGLE TOWARDS THE FLOW.
- ATTACH THE 2" X 4" 12 GAUGE WELDED WIRE MESH TO THE T-POST WITH 11 1/2 GAUGE GALVANIZED T-POST CLIPS. THE TOP OF THE WIRE TO BE 24" ABOVE GROUND LEVEL. THE WELDED WIRE MESH TO BE OVERLAPPED 6" AND TIED AT LEAST 6 TIMES WITH HOG RINGS.
- THE SILT FENCE TO BE INSTALLED WITH A SKIRT A MINIMUM OF 6" WIDE PLACED ON THE UPHILL SIDE OF THE FENCE INSIDE EXCAVATED TRENCH. THE FABRIC TO OVERLAP THE TOP OF THE WIRE BY 1".
- ANCHOR THE SILT FENCE BY BACKFILLING WITH EXCAVATED DIRT AND ROCKS (NOT LARGER THAN 2").
- GEOTEXTILE SPLICES SHOULD BE A MINIMUM OF 18" WIDE ATTACHED IN AT LEAST 6 PLACES. SPLICES IN CONCENTRATED FLOW AREAS WILL NOT BE ACCEPTED.
- SILT FENCE SHALL BE REMOVED WHEN THE SITE IS COMPLETELY STABILIZED SO AS NOT TO BLOCK OR IMPEDE STORM FLOW OR DRAINAGE.

The Architect/Engineer assumes responsibility for appropriate use of this standard.

REVISION NOTE: ADOPTED 6/21/2006

CITY OF GEORGETOWN
CONSTRUCTION STANDARDS AND DETAILS
SILT FENCE DETAIL

DRAWING NAME: EC02 | SCALE: NTS | DATE: 1/2003 | DRAWN BY: MRS | APPROVED BY: TRB

DETAIL A
NTS

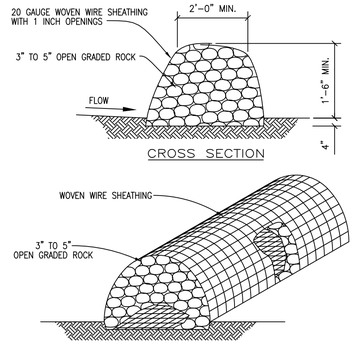

INSTALLATION:
- LAYOUT THE ROCK BERM FOLLOWING AS CLOSELY AS POSSIBLE TO THE CONTOUR.
- CLEAR THE GROUND OF DEBRIS, ROCKS OR PLANTS THAT WILL INTERFERE WITH INSTALLATION.
- PLACE WOVEN WIRE FABRIC ON THE GROUND ALONG THE PROPOSED INSTALLATION WITH ENOUGH OVERLAP TO COMPLETELY ENCIRCLE THE FINISHED SIZE OF THE BERM.
- PLACE THE ROCK ALONG THE CENTER OF THE WIRE TO THE DESIGNATED HEIGHT.
- WRAP THE STRUCTURE WITH THE PREVIOUSLY PLACED WIRE MESH SECURE ENOUGH SO THAT WHEN WALKED ACROSS THE STRUCTURE RETAINS IT'S SHAPE.
- SECURE WITH TIE WIRE.
- THE ENDS OF THE BERM SHOULD BE TIED INTO EXISTING UPSLOPE GRADE AND THE BERM SHOULD BE BURIED IN A TRENCH APPROX. 4 INCHES DEEP TO PREVENT FAILURE OF THE CONTROL.
- THE ROCK BERM SHOULD BE LEFT IN PLACE UNTIL ALL UPSTREAM AREAS ARE STABILIZED AND ACCUMULATED SILT REMOVED.

INSPECTION AND MAINTENANCE GUIDELINES:
- INSPECTION SHOULD BE MADE WEEKLY AND AFTER EACH RAINFALL EVENT BY THE RESPONSIBLE PARTY. FOR INSTALLATIONS IN STREAMBEDS, ADDITIONAL DAILY INSPECTIONS SHOULD BE MADE.
- REMOVE SEDIMENT AND OTHER DEBRIS WHEN BUILDUP REACHES 6 INCHES AND DISPOSE OF THE ACCUMULATED SILT IN AN APPROVED MANNER.
- REPAIR ANY LOOSE WIRE SHEATHING.
- THE BERM SHOULD BE RESHAPED AS NEEDED DURING INSPECTION.
- THE BERM SHOULD BE REPLACED WHEN THE STRUCTURE CEASES TO FUNCTION AS INTENDED DUE TO SILT ACCUMULATION AMONG THE ROCKS, WASHOUT, CONSTRUCTION TRAFFIC DAMAGE, ETC.

The Architect/Engineer assumes responsibility for appropriate use of this standard.

REVISION NOTE: ADOPTED 6/21/2006

CITY OF GEORGETOWN
CONSTRUCTION STANDARDS AND DETAILS
ROCK BERM DETAIL

DRAWING NAME: EC03 | SCALE: NTS | DATE: 1/2003 | DRAWN BY: MRS | APPROVED BY: TRB

DETAIL B
NTS

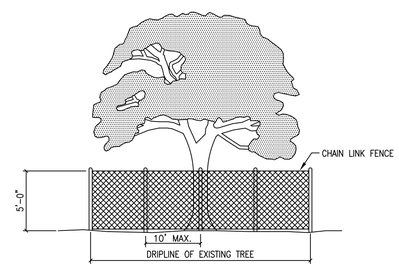

NOTES:
1. TREE PROTECTION FENCES SHALL BE INSTALLED PRIOR TO THE COMMENCEMENT OF ANY SITE PREPARATION WORK (CLEARING, GRUBBING OR GRADING).
2. FENCES SHALL COMPLETELY SURROUND THE TREE, OR CLUSTERS OF TREES; WILL BE LOCATED AT THE OUTERMOST LIMIT OF THE TREE BRANCHES (DRIPLINE), AND WILL BE MAINTAINED THROUGHOUT THE CONSTRUCTION PROJECT IN ORDER TO PREVENT THE FOLLOWING:
   A. SOIL COMPACTION IN THE ROOT ZONE AREA RESULTING FROM VEHICULAR TRAFFIC, OR STORAGE OF EQUIPMENT OR MATERIALS.
   B. ROOT ZONE DISTURBANCES DUE TO GRADE CHANGES (GREATER THAN SIX INCHES (6") CUT OR FILL, OR TRENCHING NOT REVIEWED AND AUTHORIZED BY THE CITY.
   C. WOUNDS TO EXPOSED ROOTS, TRUNKS OR LIMBS BY MECHANICAL EQUIPMENT.
   D. OTHER ACTIVITIES DETRIMENTAL TO TREES, SUCH AS CHEMICAL STORAGE, CEMENT TRUCK CLEANING AND FIRE.
3. EXCEPTIONS TO INSTALLING FENCES AT TREE DRIPLINES MAY BE PERMITTED IN THE FOLLOWING CASES:
   A. WHERE PERMEABLE PAVING IS TO BE INSTALLED, ERECT THE FENCE AT THE OUTER LIMITS OF THE PERMEABLE PAVING AREA.
   B. WHERE TREES ARE CLOSE TO PROPOSED BUILDINGS, ERECT THE FENCE NO CLOSER THAN SIX FEET (6'-0") TO BUILDING.

The Architect/Engineer assumes responsibility for appropriate use of this standard.

REVISION NOTE: ADOPTED 6/21/2006

CITY OF GEORGETOWN
CONSTRUCTION STANDARDS AND DETAILS
TREE PROTECTION – CHAIN LINK FENCE

DRAWING NAME: EC09 | SCALE: NTS | DATE: 1/2003 | DRAWN BY: MRS | APPROVED BY: TRB

DETAIL C
NTS

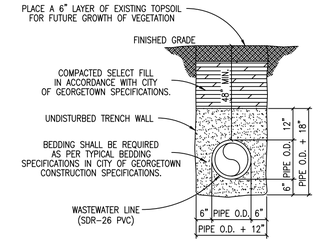

TRENCH WIDTHS
*PIPE LESS THAN 20" DIAMETER
1'-0" + PIPE O.D.
*20" DIAMETER PIPE AND LARGER
2'-0" + PIPE O.D.

The Architect/Engineer assumes responsibility for appropriate use of this standard.

REVISION NOTE: ADOPTED 6/21/2006

CITY OF GEORGETOWN
CONSTRUCTION STANDARDS AND DETAILS
TRENCH AND EMBEDMENT DETAIL UNDER NON-PAVED AREAS

DRAWING NAME: WW16 | SCALE: NTS | DATE: 1/2003 | DRAWN BY: MRS | APPROVED BY: TRB

DETAIL D
NTS

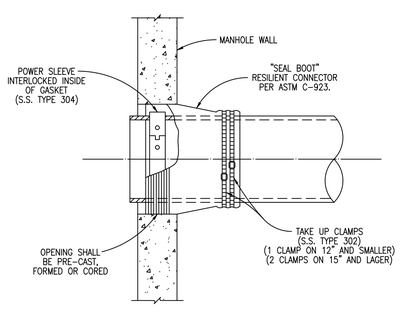

The Architect/Engineer assumes responsibility for appropriate use of this standard.

REVISION NOTE: ADOPTED 6/21/2006

CITY OF GEORGETOWN
CONSTRUCTION STANDARDS AND DETAILS
FLEXIBLE "SEAL BOOT" CONNECTOR

DRAWING NAME: WW10 | SCALE: NTS | DATE: 1/2003 | DRAWN BY: MRS | APPROVED BY: TRB

DETAIL E
NTS

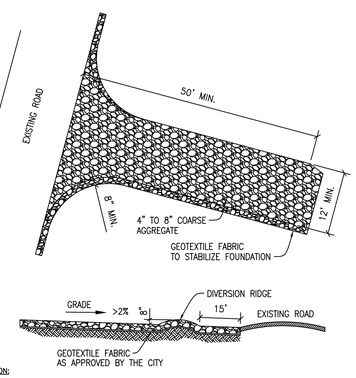

INSTALLATION:
- CLEAR THE AREA OF DEBRIS, ROCKS OR PLANTS THAT WILL INTERFERE WITH INSTALLATION.
- GRADE THE AREA FOR THE ENTRANCE TO FLOW BACK ON TO THE CONSTRUCTION SITE. RUNOFF FROM THE STABILIZED CONSTRUCTION
- PLACE GEOTEXTILE FABRIC AS APPROVED BY THE CITY.
- PLACE ROCK AS APPROVED BY THE CITY.

INSPECTIONS AND MAINTENANCE GUIDELINES:
- THE ENTRANCE SHOULD BE MAINTAINED IN A CONDITION, WHICH WILL PREVENT TRACKING OR FLOWING OF SEDIMENT ONTO PUBLIC RIGHTS-OF-WAY. THIS MAY REQUIRE PERIODIC TOP DRESSING WITH ADDITIONAL STONE AS CONDITIONS DEMAND AND REPAIR AND/OR CLEANOUT OF ANY MEASURES USED TO TRAP SEDIMENT.
- ALL SEDIMENT SPILLED, DROPPED, WASHED OR TRACKED ON TO PUBLIC RIGHTS-OF-WAY SHOULD BE REMOVED IMMEDIATELY BY CONTRACTOR.
- WHEN NECESSARY, WHEELS SHOULD BE CLEANED TO REMOVE SEDIMENT PRIOR TO ENTRANCE ONTO PUBLIC RIGHTS-OF-WAY.
- WHEN WASHING IS REQUIRED, IT SHOULD BE DONE ON AN AREA STABILIZED WITH CRUSHED STONE THAT DRAINS INTO AN APPROVED SEDIMENT TRAP OR SEDIMENT BASIN.
- ALL SEDIMENT SHOULD BE PREVENTED FROM ENTERING ANY STORM DRAIN, DITCH OR WATER COURSE BY USING APPROVED METHODS.

The Architect/Engineer assumes responsibility for appropriate use of this standard.

REVISION NOTE: ADOPTED 6/21/2006

CITY OF GEORGETOWN
CONSTRUCTION STANDARDS AND DETAILS
STABILIZED CONSTRUCTION ENTRANCE

DRAWING NAME: EC06 | SCALE: NTS | DATE: 1/2003 | DRAWN BY: MRS | APPROVED BY: TRB

DETAIL F
NTS

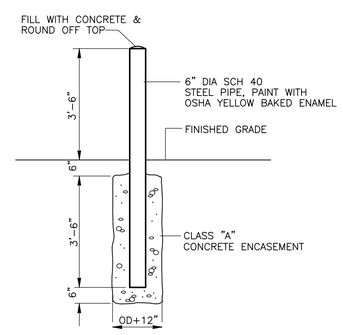

BOLLARD

DETAIL G
NTS

STATE OF TEXAS
GERALD S. FURRIER
129811
LICENSED
PROFESSIONAL ENGINEER
12/11/2023

REV. NO.	DATE	DRWN	CHKD	REMARKS

DESIGNED BY: A. KAJALE
DRAWN BY: S. DHANGAR
SHEET CHK'D BY: M. MAHADEVAN
CROSS CHK'D BY: A. KAJALE
APPROVED BY: G. FURRIER
DATE: DECEMBER 2023

CDM Smith
8310-1 N Capital of Texas Hwy, Suite 250
Austin, TX 78731
Tel: (512) 346-1100
TBPELS Firm Registration No. F-3043

CITY OF GEORGETOWN, TEXAS

CEDAR BREAKS AND D B WOOD LIFT STATIONS

CIVIL STANDARD DETAILS I

PROJECT NO. 2048-272644
FILE NAME: C001STDT
SHEET NO.
CD-1

XREFs: [REVW, G-FURRIER, South lake to South fork_Border] Images: []
Last saved by: MAHADEVANM, Time: 12/13/2023 6:48:43 PM
C:\pw_pt\MAHADEVANM\d3908821\C008STDT.dwg
© 2023 CDM SMITH ALL RIGHTS RESERVED.
REUSE OF DOCUMENTS: THESE DOCUMENTS AND DESIGNS PROVIDED BY PROFESSIONAL SERVICE, INCORPORATED HEREIN, ARE THE PROPERTY OF CDM SMITH AND ARE NOT TO BE USED, IN WHOLE OR PART, FOR ANY OTHER PROJECT WITHOUT THE WRITTEN AUTHORIZATION OF CDM SMITH.
Plotted: 12/13/2023 2:44:24 PM

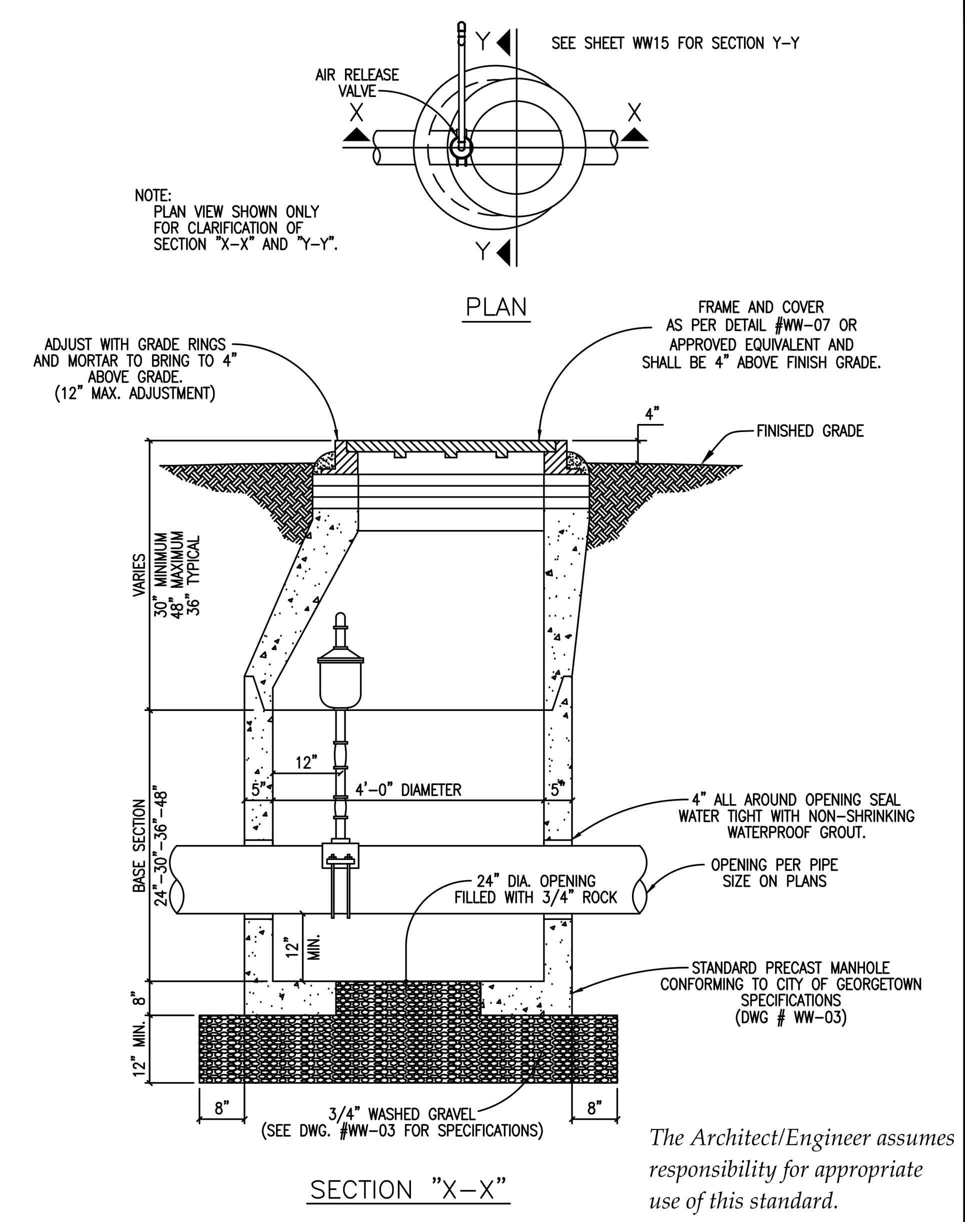

The Architect/Engineer assumes responsibility for appropriate use of this standard.

REVISION NOTE: ADOPTED 6/21/2006

GEORGETOWN TEXAS — Georgetown Utility Systems

CITY OF GEORGETOWN
CONSTRUCTION STANDARDS AND DETAILS
STANDARD AIR RELEASE VALVE FOR FORCE MAIN

DRAWING NAME: WW14 | SCALE: NTS | DATE: 1/2003 | DRAWN BY: MRS | APPROVED BY: TRB

DETAIL A
NTS

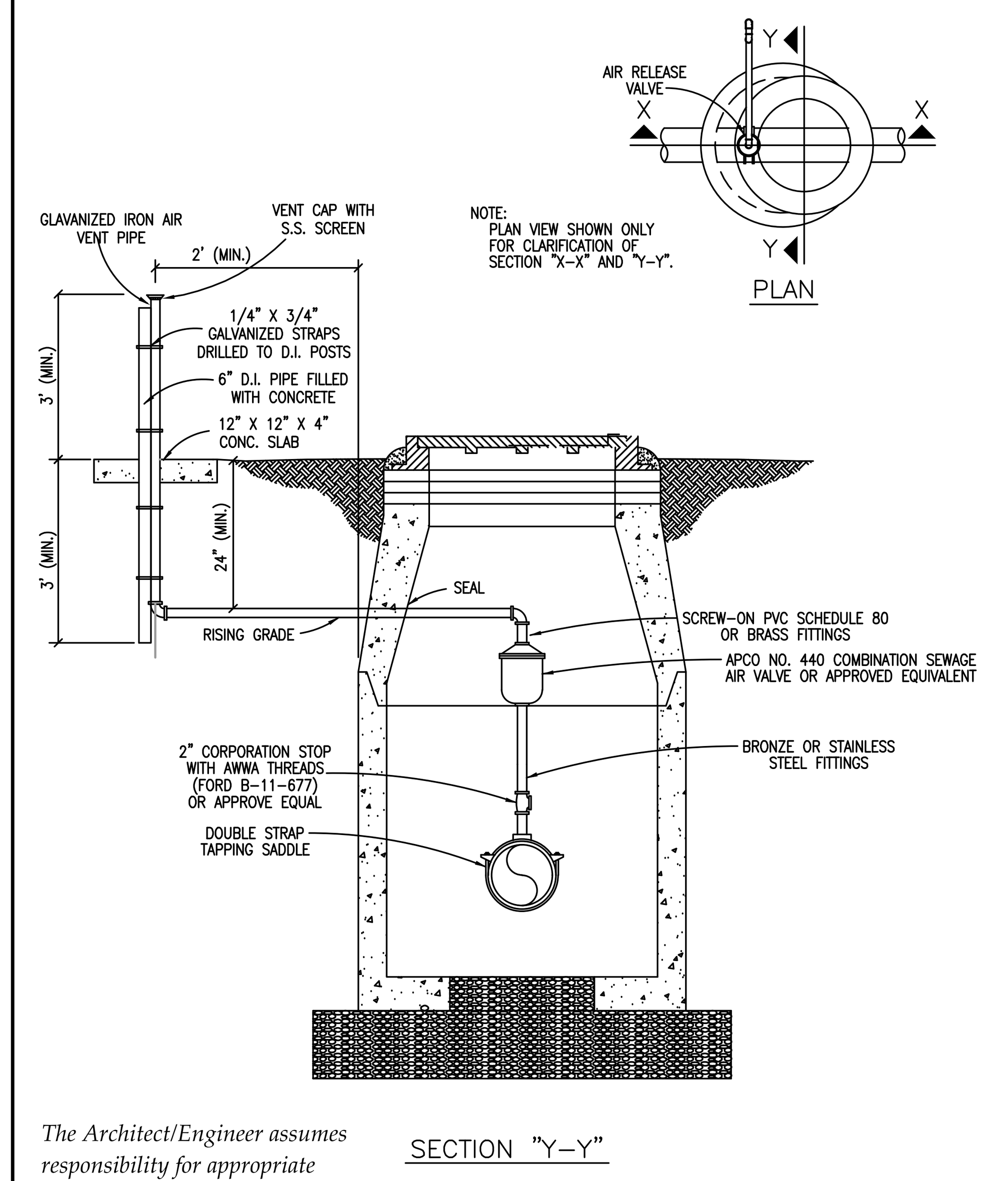

The Architect/Engineer assumes responsibility for appropriate use of this standard.

REVISION NOTE: ADOPTED 6/21/2006

CITY OF GEORGETOWN
CONSTRUCTION STANDARDS AND DETAILS
STANDARD AIR RELEASE VALVE FOR FORCE MAIN

DRAWING NAME: WW15 | SCALE: NTS | DATE: 1/2003 | DRAWN BY: MRS | APPROVED BY: TRB

DETAIL B
NTS

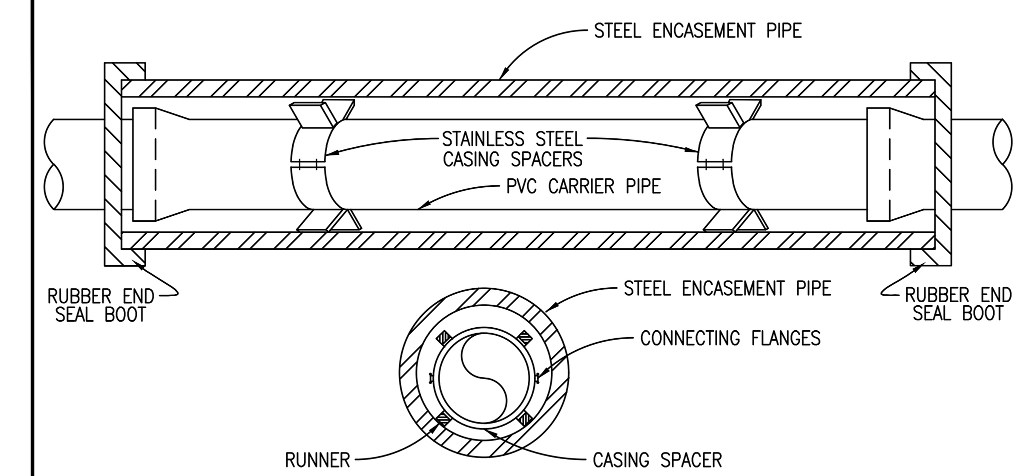

NOTES:

1. CASING SPACERS SHALL BE BOLT ON STYLE WITH A SHELL MADE IN TWO SECTIONS OF HEAVY T-304 STAINLESS STEEL. CONNECTING FLANGES SHALL BE RIBBED FOR EXTRA STRENGTH. CASING SPACERS SHALL BE MADE BY CASCADE WATERWORKS MFG. CO. OR APPROVED EQUAL.
2. CASING SPACERS SHALL HAVE RUNNERS MADE OF ULTRA HIGH MOLECULAR WEIGHT POLYMER, WITH A MINIMUM HEIGHT OF 2 INCHES.
3. DO NOT USE WEDGES BETWEEN TOP OF PVC CARRIER PIPE AND INSIDE OF CASING TO KEEP PVC FROM MOVING.
4. PRIOR TO INSERTING PVC CARRIER PIPE, ANY WATER SHOULD BE PUMPED OUT OF THE CASING PIPE SO THAT NO MORE THAN A FEW INCHES OF WATER REMAINS.
5. SPACERS WILL BE REQUIRED WITHIN AT LEAST 3 FEET FROM BOTH OPENINGS OF THE ENCASEMENT PIPE AND SPACED NO GREATER THAN 6 FEET THROUGHOUT THE ENCASEMENT PIPE.
6. ENCASEMENT PIPE SHALL BE SMOOTH STEEL 35,000 PSI YIELD STRENGTH WITH THICKNESS ACCORDING TO THE FOLLOWING TABLE:
7. WHEN CASING IS REQUIRED UNDER PAVEMENT WITHIN THE R.O.W., THE CASING SHALL EXTEND OUT TO WITHIN 4' INSIDE OF THE R.O.W. LINE, ON BOTH SIDES.
8. ALL JOINTS SHALL BE RESTRAINED ON PVC CARRIER PIPE.

PIPE SIZE-CARRIER (DIAMETER)	PIPE SIZE-CASING (DIAMETER)(MIN.)	MINIMUM PIPE THICKNESS (INCHES)	
6"	16"		
8"	18"	1/4	0.2500
10"	20"	5/16	0.3125
12" - 14"	24"	3/8	0.3750
16" - 18"	30"	7/16	0.4375
20"	36"	1/2	0.5000
24"	42"	1/2	0.5000
30"	48"	1/2	0.5000

The Architect/Engineer assumes responsibility for appropriate use of this standard.

REVISION NOTE: ADOPTED 6/21/2006

CITY OF GEORGETOWN
CONSTRUCTION STANDARDS AND DETAILS
INSTALLATION OF P.V.C. PIPE THROUGH CASING

DRAWING NAME: W14 | SCALE: NTS | DATE: 1/2003 | DRAWN BY: MRS | APPROVED BY: TRB

DETAIL C
NTS

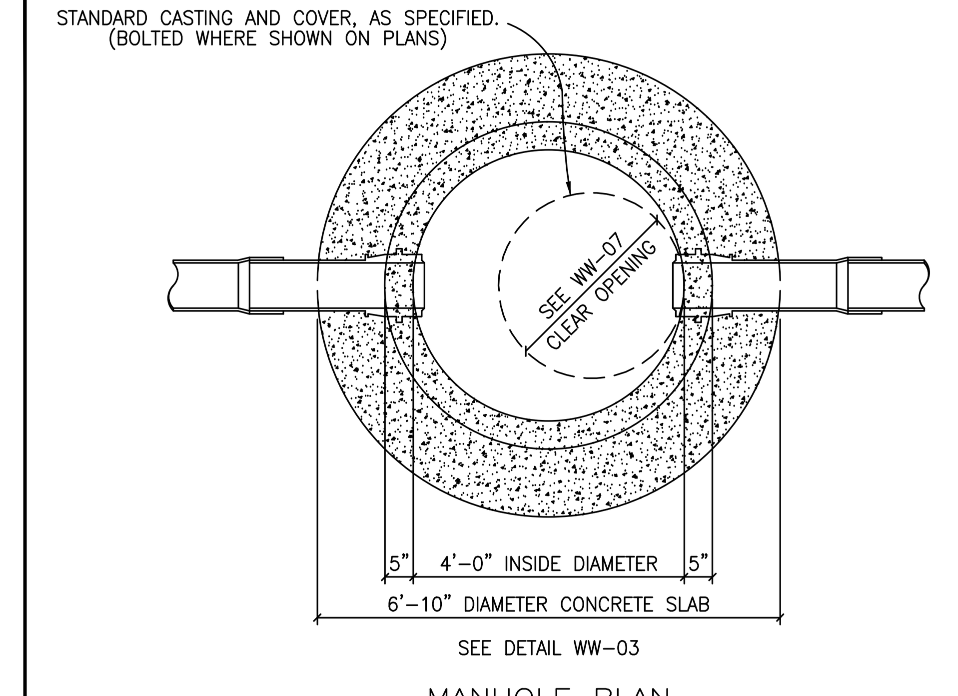

SEE DETAIL WW-03

MANHOLE PLAN

CITY OF GEORGETOWN NOTES:

MANHOLE DETAILS SHALL REFLECT THE CITY'S MINIMUM SPECIFICATIONS, AS STATED BELOW:

A. ALL MANHOLES SHALL BE 48" I.D., R.C.P., CLASS III, WITH RUBBER PROFILE GASKET – SINGLE OFF-SET JOINT CONFORMING TO ASTM C478, C433 AND C76.
B. ALL MANHOLES SHALL HAVE FRAME AND COVER, AS MANUFACTURED BY EAST JORDAN IRON WORKS (AS PER DETAIL # WW-07) OR APPROVED EQUIVALENT.
C. ALL MANHOLES SHALL BE CONCRETE WITH CAST IRON FRAME AND COVER.
D. ALL MANHOLES SHALL HAVE AN ECCENTRIC CONE.
E. MANHOLES MAY HAVE A FLAT LID, IF APPROVED BY CITY OF GEORGETOWN, BEING 12" THICK WITH A MINIMUM 30" OPENING, AS MANUFACTURED BY HANSEN PIPE AND PRECAST OR APPROVED EQUAL M.F.G. CONFORMING TO ASTM C478, 5000 P.S.I. CONCRETE, TRAFFIC BEARING AND WITH PROFILE GASKET – SINGLE OFF-SET JOINT CONFORMING TO ASTM C443.
F. INVERTS AND FLEXIBLE SEAL BOOTS, PER ASTM C-923, SHALL BE CAST INTO BASE SECTION.
G. MINIMUM DROP BETWEEN INVERTS SHALL BE ONE-TENTH OF A FOOT (0.1').
H. GRADE RINGS WITH AN I.D. TO MATCH FRAMES CLEAR OPENING WITH A MAXIMUM ADJUSTMENT OF 12" ARE ALLOWED.

The Architect/Engineer assumes responsibility for appropriate use of this standard.

REVISION NOTE: ADOPTED 6/21/2006

CITY OF GEORGETOWN
CONSTRUCTION STANDARDS AND DETAILS
STANDARD MANHOLE – PLAN

DRAWING NAME: WW02 | SCALE: NTS | DATE: 1/2003 | DRAWN BY: MRS | APPROVED BY: TRB

DETAIL D
NTS

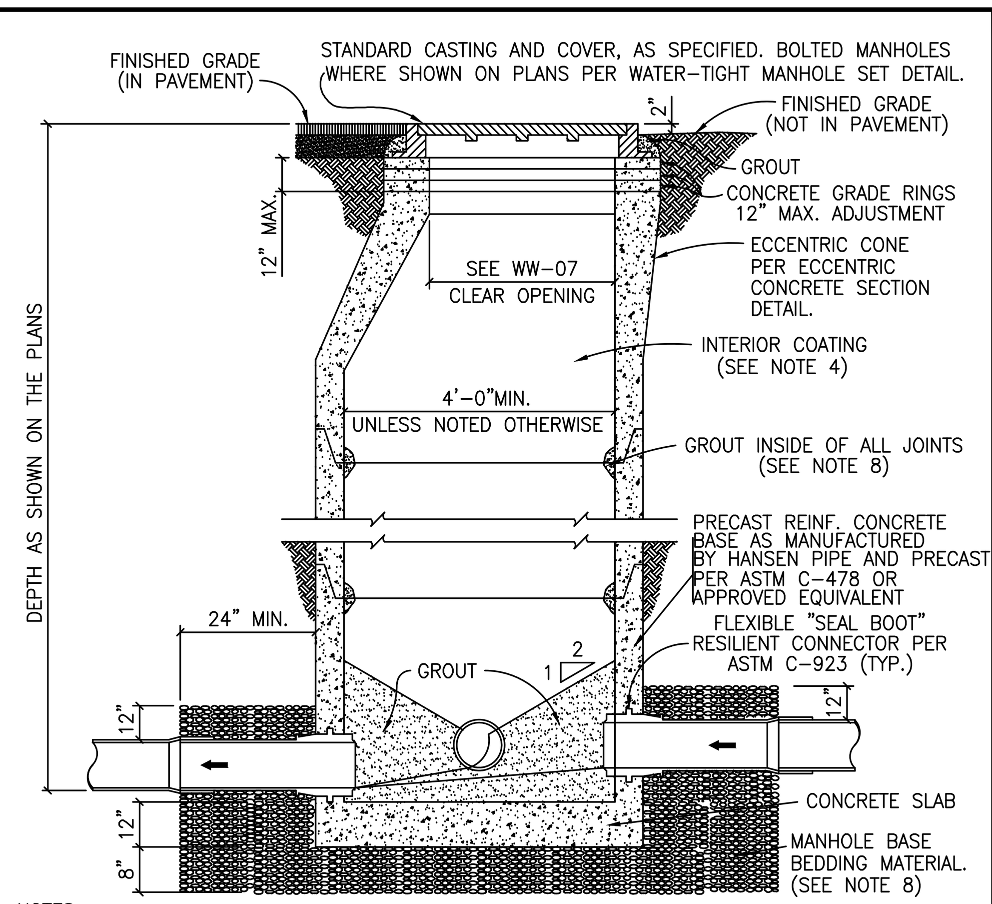

NOTES:

1. MANHOLES SHALL BE PRECAST ASTM C-478 BELL AND SPIGOT WITH PROFILE GASKET – SINGLE OFF-SET JOINTS.
2. SEE PLANS AND MANHOLE SCHEDULE, FOR MANHOLE SIZE, LOCATION, CONFIGURATION, TYPE OF TOP SECTION, VENTING REQUIREMENTS, PIPE SIZE AND TYPES.
3. SEE SPECIFICATIONS ON MATERIALS AND CONSTRUCTION.
4. AN 80 MIL. COAT OF RAVEN LINING SYSTEMS, RAVEN 405 ULTRA HIGH BUILD EPOXY COATING, OR SPRAY WALL EPOXY COATING, OR APPROVED EQUAL, TO BE APPLIED TO ENTIRE INTERIOR OF EACH WASTEWATER MANHOLE AND UNDERSIDE OF FLAT TOPS.
5. ALL MANHOLE COVERS SHALL BE BOLTED AND GASKETTED WHEN MANHOLES ARE LOCATED OUT FROM PAVEMENT.
6. MANHOLES TO BE VENTED ARE IDENTIFIED ON MANHOLE SCHEDULE. REFERENCE MANHOLE VENT DETAIL.
7. MANHOLES ARE TO BE DESIGNED TO RESIST LATERAL AND VERTICAL SOIL FORCES RESULTING FROM MANHOLE DEPTH. ADDITIONALLY, MANHOLES LOCATED IN PAVEMENT TO BE DESIGNED FOR HS-20 TRAFFIC LOADS.
8. GROUT SHALL MEET THE REQUIREMENTS AS STATED BY THE COATING MANUFACTURER.
9. MANHOLE BASE BEDDING MATERIAL SPECS. FOR 3/4" WASHED GRAVEL:
   SIEVE SIZE 2", PERCENT (%) RETAINED 0
   SIEVE SIZE 1 1/2", % RETAINED 0-10
   SIEVE SIZE 1", % RETAINED 45-80
   SIEVE SIZE 3/4", % RETAINED 85-100
   SIEVE SIZE 3/8", % RETAINED 95-100

The Architect/Engineer assumes responsibility for appropriate use of this standard.

REVISION NOTE: ADOPTED 6/21/2006

CITY OF GEORGETOWN
CONSTRUCTION STANDARDS AND DETAILS
STANDARD MANHOLE – SECTION

DRAWING NAME: WW03 | SCALE: NTS | DATE: 1/2003 | DRAWN BY: MRS | APPROVED BY: TRB

DETAIL E
NTS

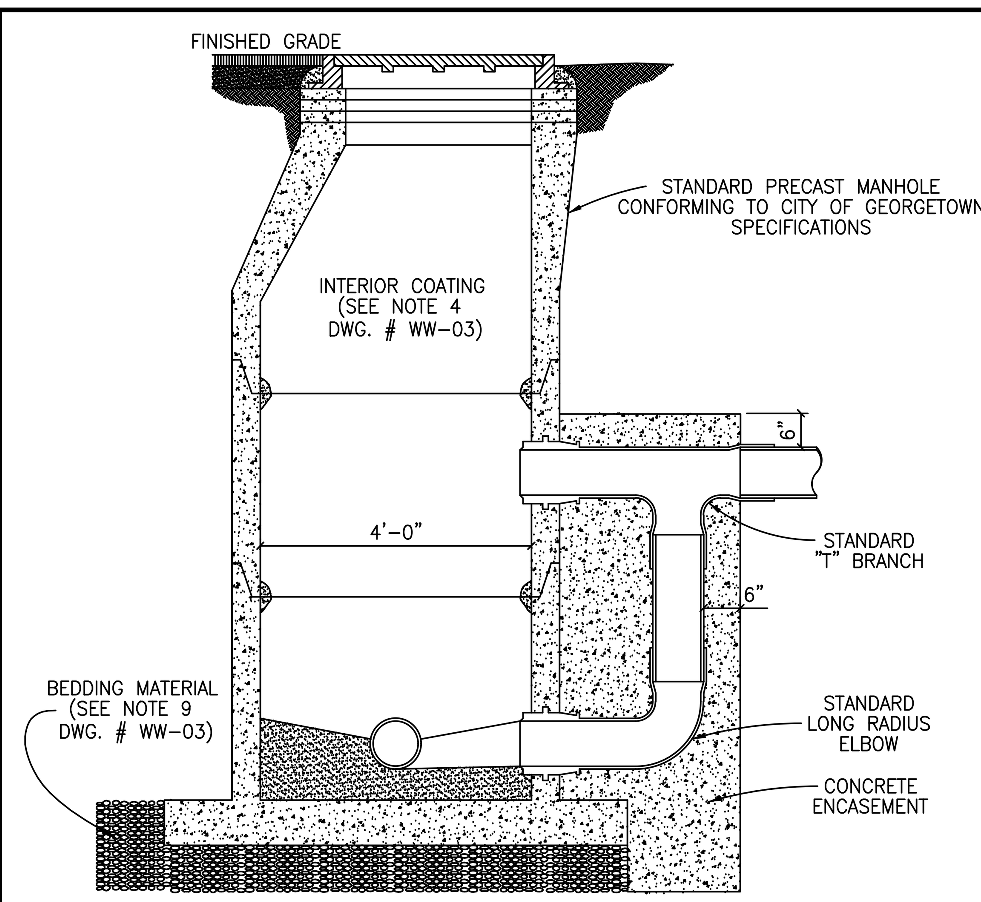

NOTES:

1. CONCRETE ENCASEMENT FOR DROP CONNECTION TO BE POURED INTEGRALLY WITH BOTH MANHOLE SLAB AND WALL.
2. DROP CONNECTIONS SHALL BE REQUIRED WHENEVER AN INFLUENT SEWER IS LOCATED TWO FEET (2') OR MORE ABOVE THE MAIN INVERT CHANNEL.
3. A FLOW CHANNEL SHALL BE CONSTRUCTED INSIDE MANHOLE TO DIRECT INFLUENT INTO FLOW STREAM.
4. WHEN P.V.C. IS USED IN SANITARY SEWER LINES, SOLVENT TYPE JOINT P.V.C. FITTINGS MAY BE UTILIZED IN THE DROP ASSEMBLY ONLY.
5. MINIMUM PIPE SIZE FOR DROP IS EIGHT INCHES (8").
6. SEE STANDARD MANHOLE DETAIL (DWG. # WW-03) FOR ADDITIONAL REQUIREMENTS.

The Architect/Engineer assumes responsibility for appropriate use of this standard.

REVISION NOTE: ADOPTED 6/21/2006

CITY OF GEORGETOWN
CONSTRUCTION STANDARDS AND DETAILS
DROP CONNECTION-PRECAST MANHOLE TYPE "A"

DRAWING NAME: WW04 | SCALE: NTS | DATE: 1/2003 | DRAWN BY: MRS | APPROVED BY: TRB

DETAIL F
NTS

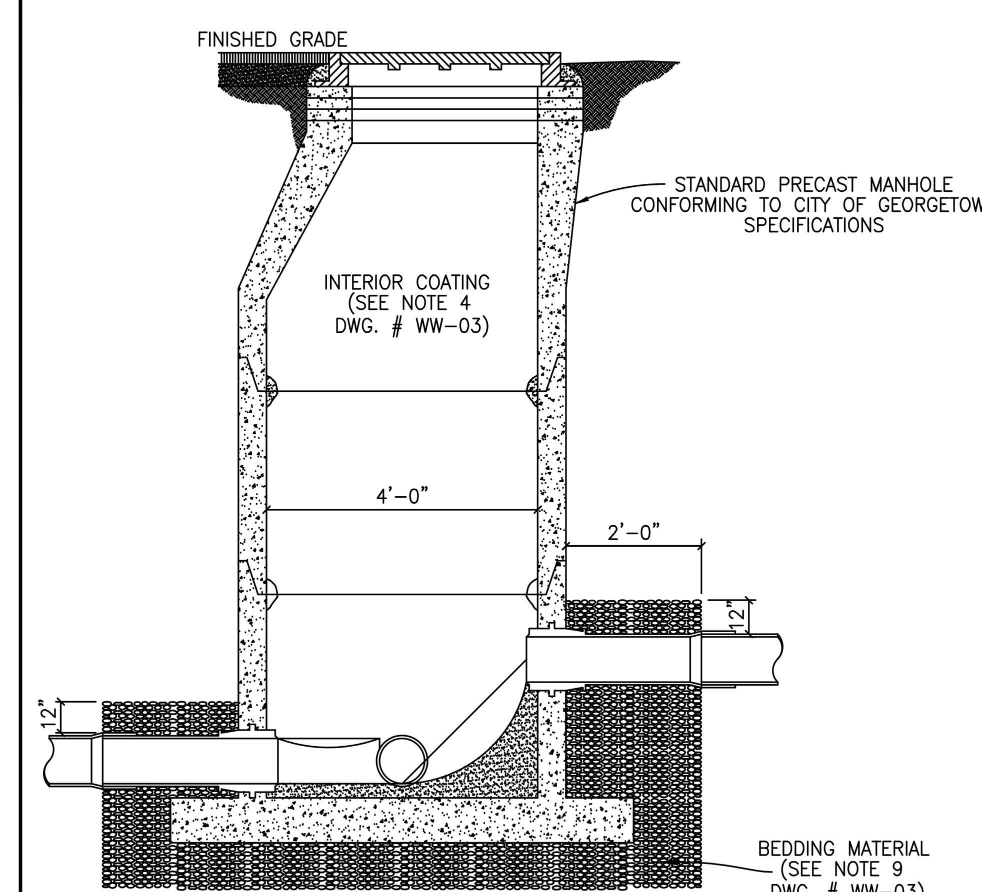

NOTES:

1. TO BE USED WHERE DROP IS SIX INCHES (6") TO TWO FEET (2'-0").
2. A FLOW CHANNEL SHALL BE CONSTRUCTED INSIDE MANHOLE TO DIRECT INFLUENT INTO FLOW STREAM.
3. CONSTRUCTION OF DROP SHALL PROVIDE AN OVERSIZED SLAB TO EXTEND UNDER THE DROP CONNECTION.
4. MINIMUM PIPE SIZE FOR DROP IS EIGHT INCHES (8").
5. SEE STANDARD MANHOLE DETAIL (DWG. # WW-03) FOR ADDITIONAL REQUIREMENTS.

The Architect/Engineer assumes responsibility for appropriate use of this standard.

REVISION NOTE: ADOPTED 6/21/2006

CITY OF GEORGETOWN
CONSTRUCTION STANDARDS AND DETAILS
DROP CONNECTION-PRECAST MANHOLE TYPE "B"

DRAWING NAME: WW05 | SCALE: NTS | DATE: 1/2003 | DRAWN BY: MRS | APPROVED BY: TRB

DETAIL G
NTS

Plotted: 12/13/2023 6:38:40 PM

REV. NO.	DATE	DRWN	CHKD	REMARKS

DESIGNED BY: A. KAJALE
DRAWN BY: S. DHANGAR
SHEET CHK'D BY: M. MAHADEVAN
CROSS CHK'D BY: A. KAJALE
APPROVED BY: G. FURRIER
DATE: DECEMBER 2023

CDM Smith
8310-1 N Capital of Texas Hwy, Suite 250
Austin, TX 78731
Tel: (512) 346-1100
TBPELS Firm Registration No. F-3043

CITY OF GEORGETOWN, TEXAS

CEDAR BREAKS AND D B WOOD LIFT STATIONS

CIVIL STANDARD DETAILS II

PROJECT NO. 2048-272644
FILE NAME: C002STDT
SHEET NO. CD-2

XREFs: [REVW_G-FURRIER, South lake to South fork_Border] Images: []
Last saved by: LIZ2 Time: 12/13/2023 6:38:23 PM
C:\pw_pt1\liz2\d3908821\C002STDT.dwg
© 2023 CDM SMITH ALL RIGHTS RESERVED.
REUSE OF DOCUMENTS: THESE DOCUMENTS AND DESIGNS PROVIDED BY PROFESSIONAL SERVICE, INCORPORATED HEREIN, ARE THE PROPERTY OF CDM SMITH AND ARE NOT TO BE USED, IN WHOLE OR PART, FOR ANY OTHER PROJECT WITHOUT THE WRITTEN AUTHORIZATION OF CDM SMITH.

The Architect/Engineer assumes responsibility for appropriate use of this standard.

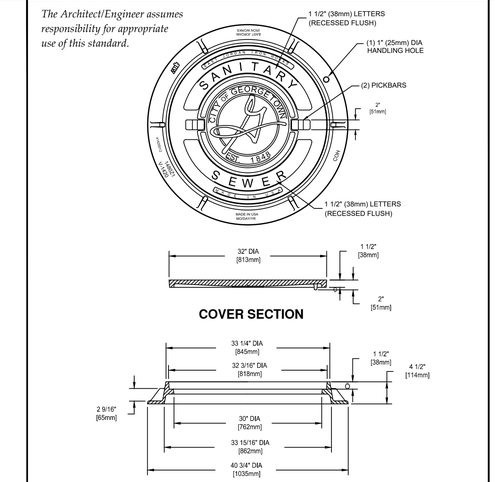

NOTES:

1. STANDARD WASTEWATER MANHOLE SET TO BE EAST JORDAN IRON WORKS, INC. CATALOG NO. 1480A V-1420/1480Z1, COVER TO BE STAMPED WITH "SANITARY SEWER".
2. STANDARD WASTEWATER MANHOLE SET TO BE HEAVY DUTY LOAD RATED.
3. FOR MORE DETAILED SPECIFICATIONS REFER TO EAST JORDAN IRON WORKS, INC. REFERENCE PRODUCT DRAWING 41420012 00148390.
4. FOR BOLTED WASTEWATER MANHOLE SET REFER TO DETAIL WW07A.

REVISION NOTE: ADOPTED 6/21/2006

CITY OF GEORGETOWN
CONSTRUCTION STANDARDS AND DETAILS
STANDARD WASTEWATER MANHOLE SET

DRAWING NAME: WW07
SCALE: NTS | DATE: 1/2003
DRAWN BY: MRS | APPROVED BY: TRB

DETAIL A
NTS

The Architect/Engineer assumes responsibility for appropriate use of this standard.

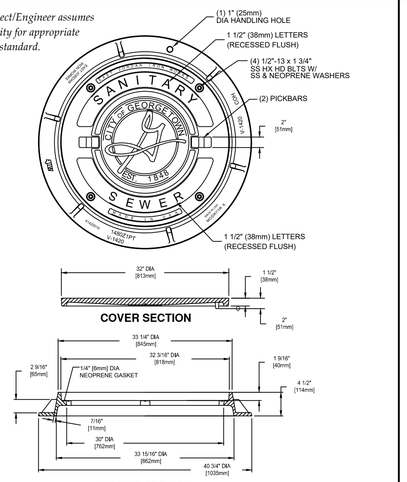

NOTES:

1. BOLTED WASTEWATER MANHOLE SET TO BE EAST JORDAN IRON WORKS, INC. CATALOG NO. 1480APT V-1420/1480Z1PT, COVER TO BE STAMPED WITH "SANITARY SEWER".
2. BOLTED WASTEWATER MANHOLE SET TO BE HEAVY DUTY LOAD RATED.
3. FOR MORE DETAILED SPECIFICATIONS REFER TO EAST JORDAN IRON WORKS, INC. REFERENCE PRODUCT DRAWING 00148392 41420015.
4. FOR STANDARD WASTEWATER MANHOLE SET REFER TO DETAIL WW07.

REVISION NOTE: ADOPTED 6/21/2006

CITY OF GEORGETOWN
CONSTRUCTION STANDARDS AND DETAILS
BOLTED WASTEWATER MANHOLE SET

DRAWING NAME: WW07A
SCALE: NTS | DATE: 1/2006
DRAWN BY: MRS | APPROVED BY: TRB

DETAIL B
NTS

The Architect/Engineer assumes responsibility for appropriate use of this standard.

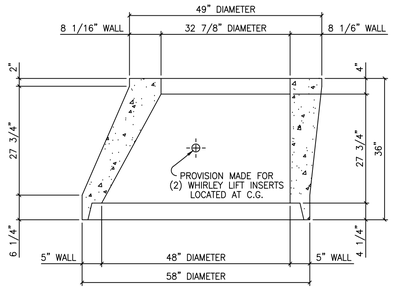

The Architect/Engineer assumes responsibility for appropriate use of this standard.

REVISION NOTE: ADOPTED 6/21/2006

CITY OF GEORGETOWN
CONSTRUCTION STANDARDS AND DETAILS
48"X5" TO 33"X8"X36" TALL ECCENTRIC CONCRETE SECTION

DRAWING NAME: WW08
SCALE: NTS | DATE: 1/2003
DRAWN BY: MRS | APPROVED BY: TRB

DETAIL C
NTS

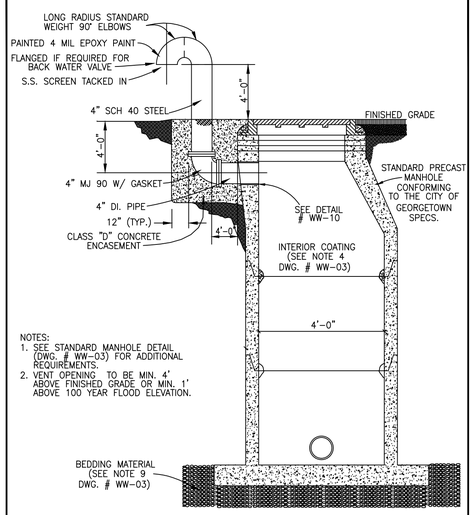

NOTES:
1. SEE STANDARD MANHOLE DETAIL (DWG. # WW-03) FOR ADDITIONAL REQUIREMENTS.
2. VENT OPENING TO BE MIN. 4' ABOVE FINISHED GRADE OR MIN. 1' ABOVE 100 YEAR FLOOD ELEVATION.

The Architect/Engineer assumes responsibility for appropriate use of this standard.

REVISION NOTE: ADOPTED 6/21/2006

CITY OF GEORGETOWN
CONSTRUCTION STANDARDS AND DETAILS
TYPICAL MANHOLE WITH VENT

DRAWING NAME: WW19
SCALE: NTS | DATE: 11/2003
DRAWN BY: MRS | APPROVED BY: TRB

DETAIL D
NTS

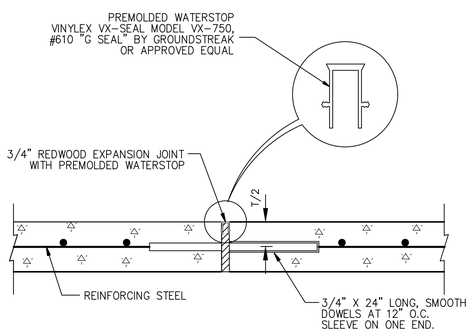

EXPANSION JOINT
DETAIL E
NTS

NOTES:

1. TOOLED OR SAW CUT CONTRACTION JOINTS SHALL BE AT REGULAR INTERVALS THROUGHOUT THE PAVEMENT AT EVEN INTERVALS BETWEEN EXPANSION JOINTS AS INDICATED ON THE PLAN.
2. JOINTS SHALL BE SPACED SO THAT THE RESULTING PANELS ARE CLOSE TO SQUARE. IN NO CASE SHOULD THE LENGTH OF A PANEL EXCEED 1.5 TIMES THE WIDTH.

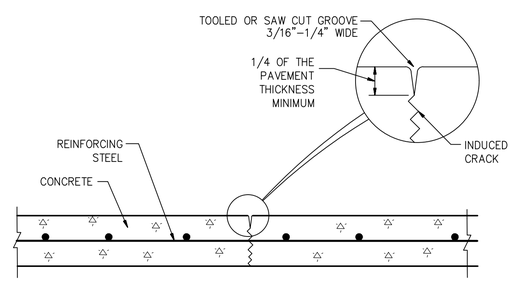

CONTRACTION JOINT
DETAIL F
NTS

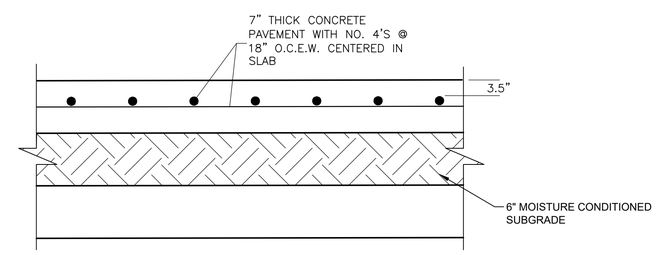

NOTES:

1. INSTALL EXPANSION JOINTS AT NO GREATER THAN 75 FEET ON CENTER IN BOTH DIRECTIONS.
2. INSTALL CONTRACTION JOINTS AT NO GREATER THAN 15 FEET ON CENTER IN BOTH DIRECTIONS

CONCRETE PAVING SECTION
DETAIL G
NTS

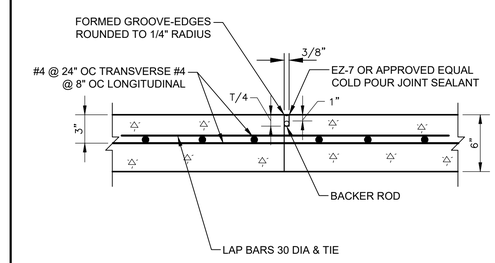

CONSTRUCTION JOINT
DETAIL H
NTS

STATE OF TEXAS
GERALD S. FURRIER
129811
LICENSED PROFESSIONAL ENGINEER
12/11/2023

REV. NO.	DATE	DRWN	CHKD	REMARKS

DESIGNED BY: A. KAJALE
DRAWN BY: S. DHANGAR
SHEET CHK'D BY: M. MAHADEVAN
CROSS CHK'D BY: A. KAJALE
APPROVED BY: G. FURRIER
DATE: DECEMBER 2023

CDM Smith
8310-1 N Capital of Texas Hwy, Suite 250
Austin, TX 78731
Tel: (512) 346-1100
TBPELS Firm Registration No. F-3043

CITY OF GEORGETOWN, TEXAS

CEDAR BREAKS AND D B WOOD LIFT STATIONS

CIVIL STANDARD DETAILS III

PROJECT NO. 2048-272644
FILE NAME: C003STDT
SHEET NO.
CD-3

© 2023 CDM SMITH ALL RIGHTS RESERVED.
REUSE OF DOCUMENTS: THESE DOCUMENTS AND DESIGNS PROVIDED BY PROFESSIONAL SERVICE, INCORPORATED HEREIN, ARE THE PROPERTY OF CDM SMITH AND ARE NOT TO BE USED, IN WHOLE OR PART, FOR ANY OTHER PROJECT WITHOUT THE WRITTEN AUTHORIZATION OF CDM SMITH.

Plotted: 12/13/2023 2:45:18 PM

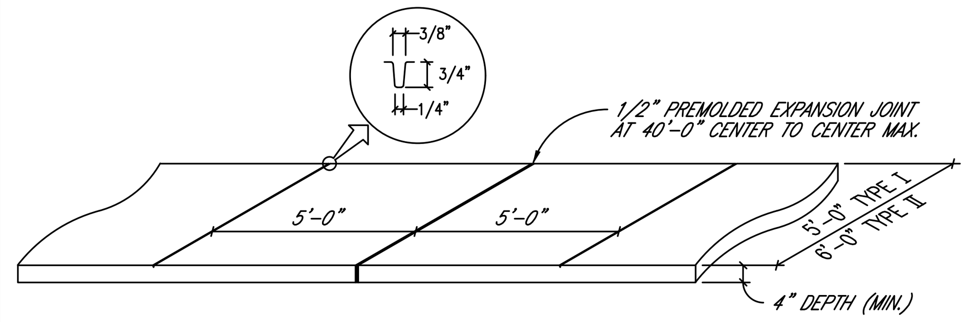

TYPE I – AS REQUIRED FOR SINGLE FAMILY, DUPLEXES AND TOWNHOUSES.
TYPE II – AS REQUIRED FOR APARTMENTS, OFFICE AND PARKING LOTS, COMMERCIAL AND INDUSTRIAL.

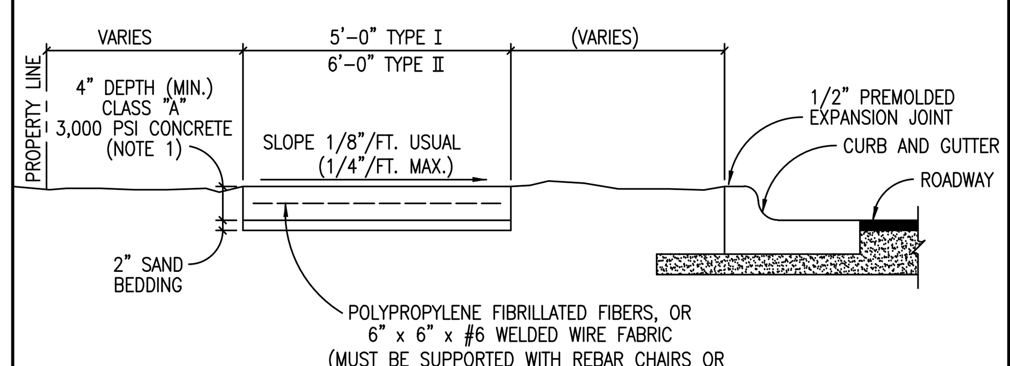

NOTES:

1. FOR ROLLER STAMPED SIDEWALK: MATCH TO SPECIFICATIONS.
2. STANDARD LOCATION OF SIDEWALK IS OFF BACK OF CURB. SPECIAL DESIGNS MAY BE APPROVED BY THE CITY ENGINEER, PRIOR TO FINAL DESIGN.
3. SIDEWALK SHALL CONFORM TO CURRENT AMERICANS WITH DISABILITIES ACT STANDARDS.
4. IF REQUIRED ALL SIDEWALKS SHALL BE SUBMITTED AND APPROVED BY THE TEXAS DEPARTMENT OF LICENSING AND REGULATION BY THE ENGINEER RECORD.
5. ANY VARIANCE IN TEXTURE, GRADE OR ALIGNMENT MUST BE APPROVED BY THE TEXAS DEPARTMENT OF LICENSING AND REGULATION.

The Architect/Engineer assumes responsibility for appropriate use of this standard.

ADOPTED 6/21/2006

GEORGETOWN TEXAS — CITY OF GEORGETOWN CONSTRUCTION STANDARDS AND DETAILS — SIDEWALK SECTION AND JOINT DETAIL — SD14 — NTS 1/2003 MRS TRB

DETAIL A –
NTS

FLOW PATTERNS FOR INVERT CHANNELS

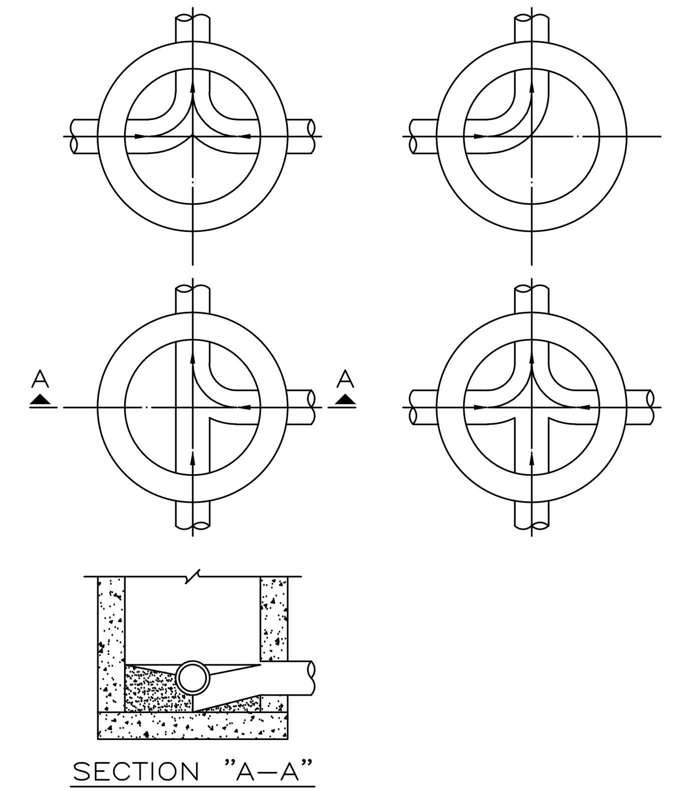

NOTES:

1. INVERT CHANNELS TO BE CONSTRUCTED FOR SMOOTH FLOW WITH NO OBSTRUCTIONS.
2. SPILLWAYS SHALL BE CONSTRUCTED BETWEEN PIPES WITH DIFFERENT INVERT ELEVATIONS PROVIDING FOR SMOOTH FLOW.
3. CHANNELS FOR FUTURE CONSTRUCTIONS (STUBS) SHALL BE CONSTRUCTED, FILLED WITH SAND, AND COVERED WITH 1" OF MORTAR.
4. SLOPE MANHOLE ITSELF WITH A 1:2 SLOPE FROM MANHOLE WALL TO CHANNEL.
5. INVERT SHALL BE A MINIMUM OF 1/2 THE DIAMETER OF THE LARGEST PIPE OR 4" DEEP.

The Architect/Engineer assumes responsibility for appropriate use of this standard.

ADOPTED 6/21/2006

GEORGETOWN TEXAS — CITY OF GEORGETOWN CONSTRUCTION STANDARDS AND DETAILS — FLOW PATTERNS FOR INVERT CHANNELS — WW06 — NTS 1/2003 MRS TRB

DETAIL B –
NTS

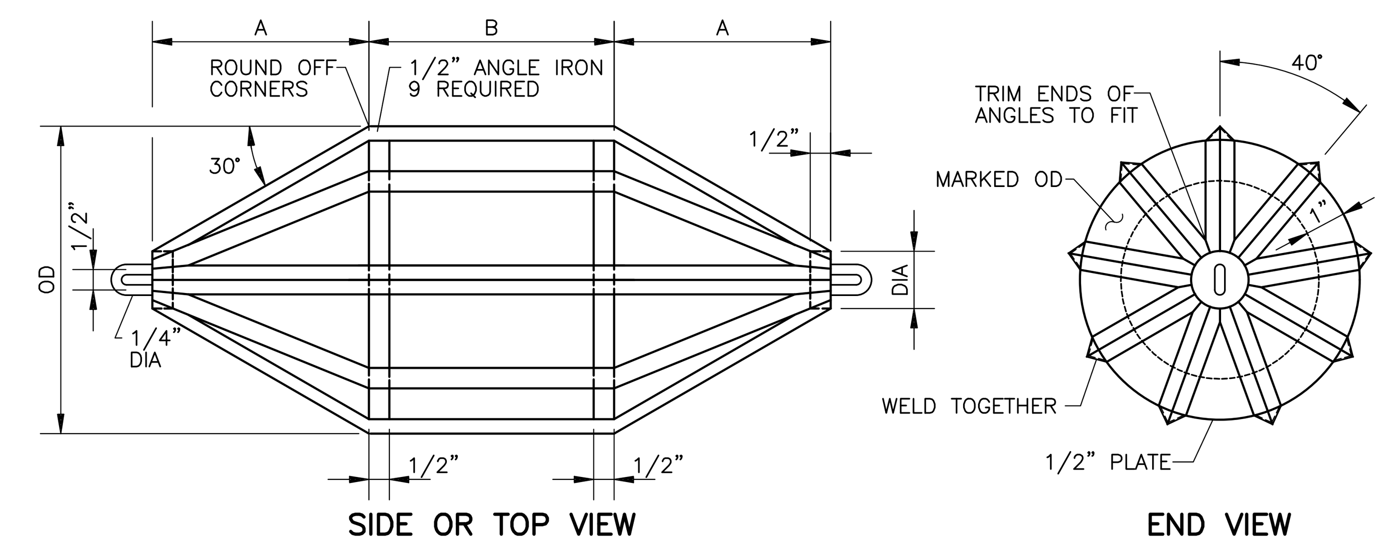

PIPE SIZE (IN)	A (IN)	B (IN)	MANDREL OD PVC (SDR 26) ASTM D3034 (IN)	DIA (IN)
6	4.0	4	5.62	1.00
8	5.3	6	7.52	1.40
10	6.7	6	9.41	1.67
12	8.0	8	11.19	1.95
15	10.0	9	13.70	2.15

PIPE SIZE (IN)	A (IN)	B (IN)	MANDREL OD PVC (T-1) ASTM F679 (IN)	DIA (IN)
18	12	12	16.75	2.89
21	14	14	19.74	3.57
24	16	16	22.21	3.73
27	18	18	25.03	4.25

DEFLECTION TESTING MANDREL

DETAIL C –
NTS

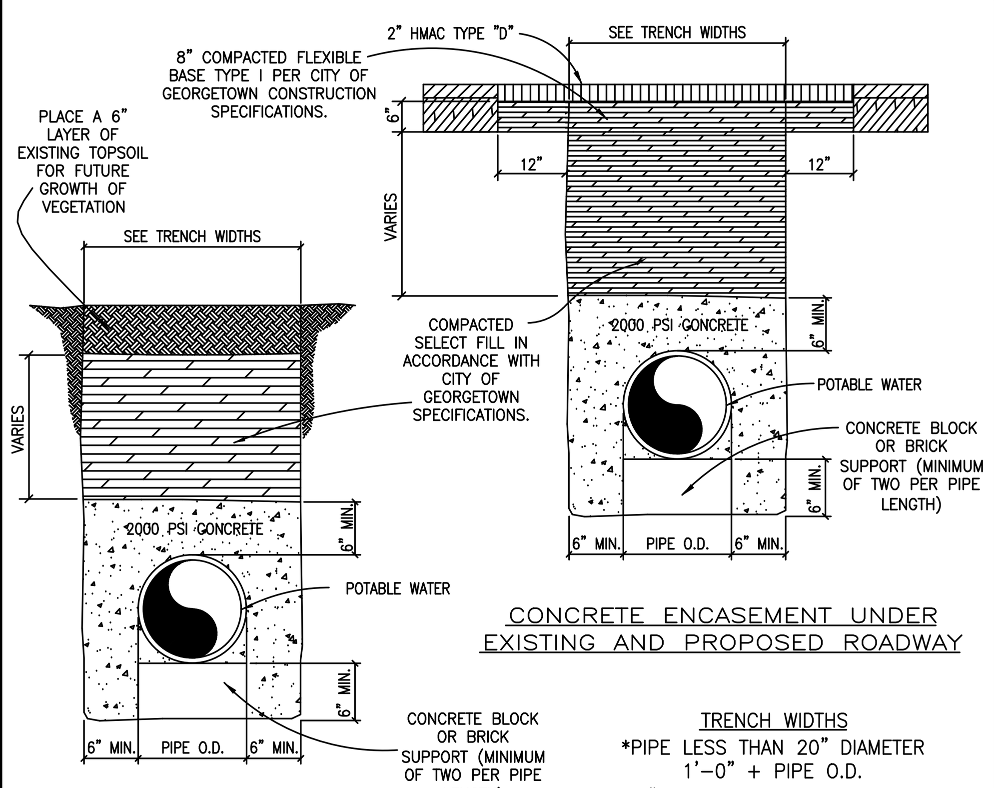

CONCRETE ENCASEMENT UNDER EXISTING AND PROPOSED ROADWAY

CONCRETE ENCASEMENT UNDER NATURAL GROUND

TRENCH WIDTHS
*PIPE LESS THAN 20" DIAMETER 1'-0" + PIPE O.D.
*20" DIAMETER PIPE AND LARGER 2'-0" + PIPE O.D.

NOTES:

1. ENCASEMENT TO BE CONSTRUCTED WHERE SEWER LINES PASS OVER OR UNDER A WATER MAIN WITH LESS THAN TWELVE INCHES (12") CLEAR DISTANCE.
2. AT CROSSINGS, ENCASEMENT SHALL EXTEND TEN FEET (10'-0") ON EITHER SIDE OF CROSSING.
3. BEGINNING AND ENDING OF ENCASEMENTS SHALL NOT BE MORE THAN SIX INCHES (6") FROM A PIPE JOINT.
4. WHERE WATER AND SEWER LINES PARALLEL WITH LESS THAN TEN FEET (10'-0") HORIZONTAL CLEAR DISTANCE, NO ENCASEMENT IS REQUIRED IF BOTH LINES ARE 150 PSI PRESSURE PIPE.
5. RAW WATER MAINS SHALL BE 150 PSI PRESSURE RATED WHEN PARALLELING POTABLE WATER MAINS WITH LESS THAN NINE FEET (9'-0") HORIZONTAL CLEARANCE.
6. WHERE MINIMUM COVER, THIRTY SIX INCHES (36") IS NOT AVAILABLE, ENCASEMENT WILL BE REQUIRED.
7. ALL CONCRETE ENCASEMENTS MUST BE FORMED AND INSPECTED BY THE CITY OF GEORGETOWN INSPECTOR PRIOR TO PLACING CONCRETE AND BACKFILLING.
8. CONTRACTOR OR ENGINEER MAY USE FLOWABLE BACKFILL AS AN ALTERNATE BACKFILL MATERIAL (SEE C9 FLOWABLE BACKFILL FOR THE SPECIFICATION).

The Architect/Engineer assumes responsibility for appropriate use of this standard.

ADOPTED 6/21/2006

GEORGETOWN TEXAS — CITY OF GEORGETOWN CONSTRUCTION STANDARDS AND DETAILS — CONCRETE ENCASEMENT DETAIL — W15 — NTS 1/2003 MRS TRB

DETAIL D –
NTS

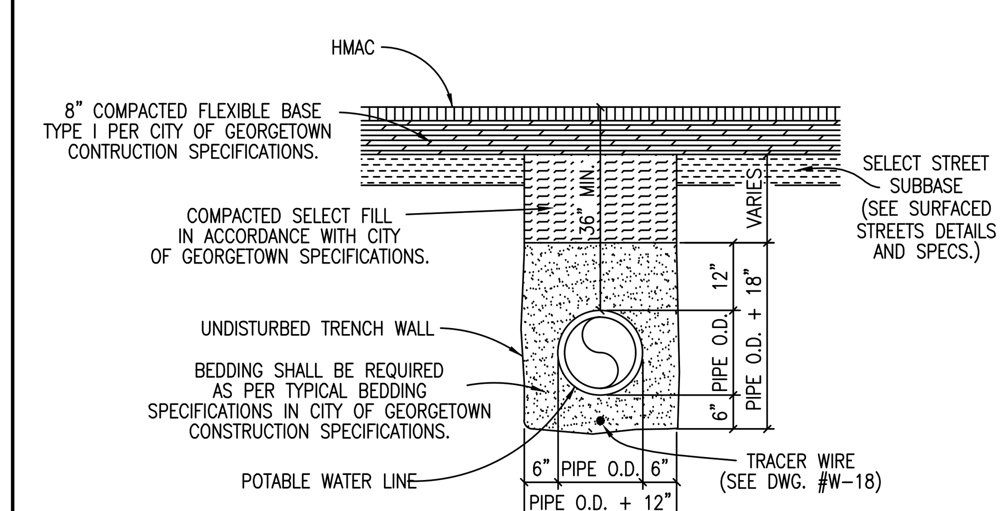

TRENCH WIDTHS
*PIPE LESS THAN 20" DIAMETER 1'-0" + PIPE O.D.
*20" DIAMETER PIPE AND LARGER 2'-0" + PIPE O.D.

NOTES:

1. DENSITY TESTS SHALL BE TAKEN IN ACCORDANCE WITH THE CITY OF GEORGETOWN CONSTRUCTION SPECIFICATIONS AND STANDARDS.
2. CONTRACTOR OR ENGINEER MAY USE FLOWABLE BACKFILL AS AN ALTERNATE BACKFILL MATERIAL (SEE C9 FLOWABLE BACKFILL FOR THE SPECIFICATION).

The Architect/Engineer assumes responsibility for appropriate use of this standard.

ADOPTED 6/21/2006

GEORGETOWN TEXAS — CITY OF GEORGETOWN CONSTRUCTION STANDARDS AND DETAILS — TRENCH AND EMBEDMENT DETAIL UNDER PROPOSED ROADWAY — W22 — NTS 1/2003 MRS TRB

DETAIL E –
NTS

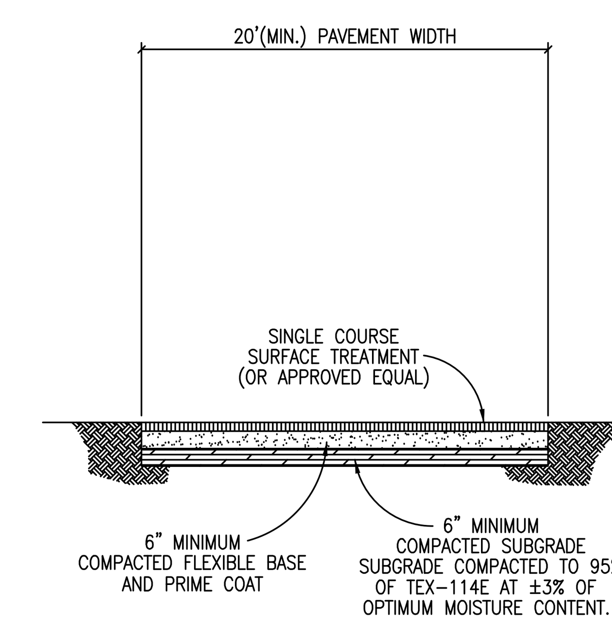

NOTES:

1. EVERY BUILDING CONSTRUCTED SHALL BE ACCESSIBLE TO EMERGENCY APPARATUS BY WAY OF TEMPORARY ALL WEATHER DRIVING SURFACES.
2. A TEMPORARY ALL WEATHER DRIVING SURFACE SHALL EXTEND TO WITHIN 150' OF ALL EXTERIOR PORTIONS OF BUILDINGS
3. TEMPORARY ALL WEATHER DRIVING SURFACES SHALL BE CONSTRUCTED AS SHOWN ON CONSTRUCTION PLANS AND IN ACCORDANCE WITH ITEM 316 SURFACE TREATMENTS OF THE TXDOT STANDARD SPECIFICATIONS FOR CONSTRUCTION OF HIGHWAYS, STREETS AND BRIDGES.
4. TEMPORARY ALL WEATHER DRIVING SURFACES SHALL BE CAPABLE OF SUPPORTING A DESIGN WHEEL LOAD OF 16,000 LB. (H-20 LOADING) IN ORDER TO SUPPORT A GROSS VEHICLE WEIGHT OF 80,000 LB. IF SUBGRADE CONDITIONS CHANGE OR ARE VERY UNSTABLE, AN ADDITIONAL GEOTECHNICAL AND/OR ENGINEERING DESIGN MAY BE REQUIRED.
5. CONTRACTOR OR DEVELOPER SHALL MAINTAIN TEMPORARY ALL WEATHER DRIVING SURFACE THROUGHOUT CONSTRUCTION.
6. APPLICABLE SIGNAGE SHALL BE INSTALLED BY THE CONTRACTOR TO DISALLOW PARKING (NO PARKING – FIRE LANE).
7. TEMPORARY ALL WEATHER DRIVING SURFACES SHALL BE INSTALLED PRIOR TO THE ERECTION OF ANY STRUCTURAL FRAMING ABOVE THE FOUNDATION SLAB. CONTACT FIRE SERVICES FOR THE COORDINATION OF TEMPORARY ALL WEATHER DRIVING SURFACES FOR CONSTRUCTION.

The Architect/Engineer assumes responsibility for appropriate use of this standard.

ADOPTED 6/21/2006

GEORGETOWN TEXAS — CITY OF GEORGETOWN CONSTRUCTION STANDARDS AND DETAILS — TEMPORARY ALL WEATHER DRIVING SURFACE — SD43 — NTS 1/2003 MRS TRB

DETAIL F –
NTS

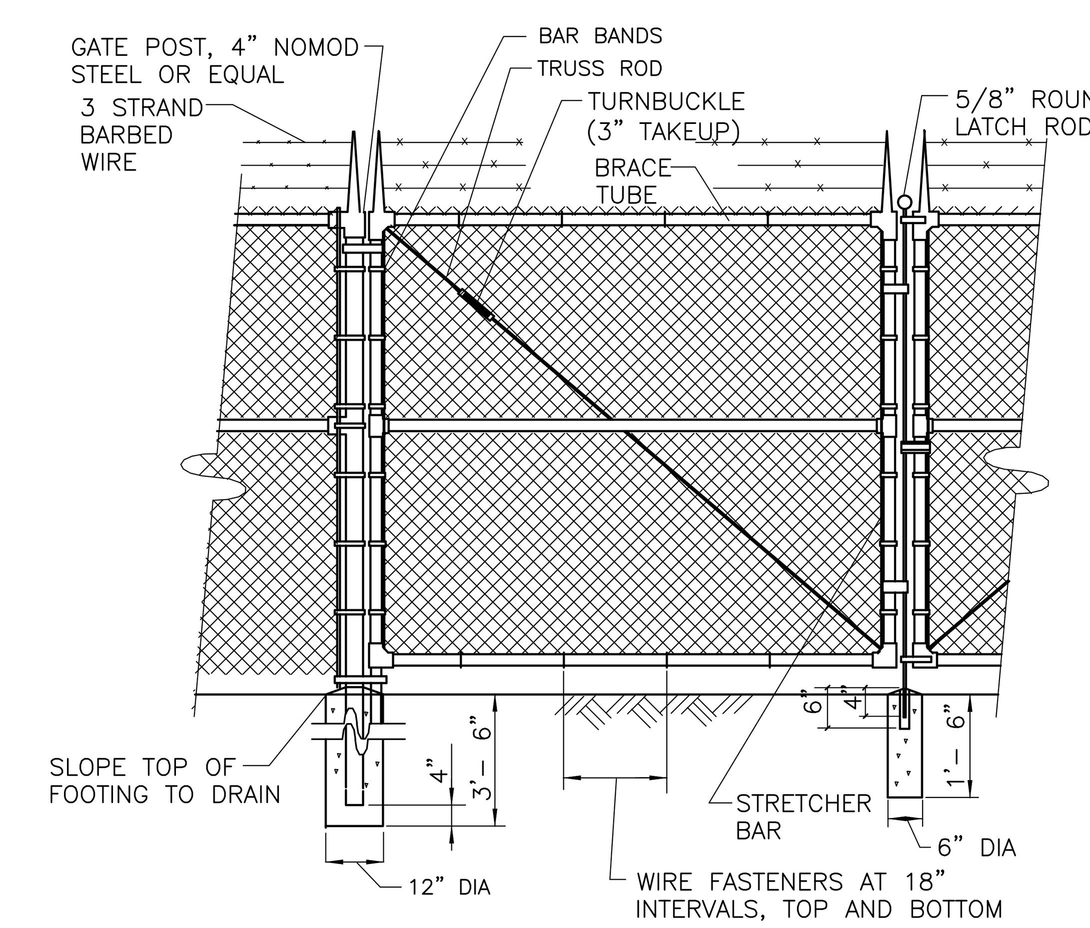

CHAIN LINK FENCE–GATE

NOTE

1 PROVIDE A SIGN ON THE FENCE STATING:
* STATION OWNER
* STATION NAME
* EMERGENCY PHONE NUMBERS
* NO TRESPASSING INFORMATION.

CHAIN LINK FENCE

DETAIL G –
NTS

STATE OF TEXAS — GERALD S. FURRIER — 129811 — LICENSED PROFESSIONAL ENGINEER — 12/11/2023

Plotted: 12/13/2023 2:45:43 PM

REV. NO.	DATE	DRWN	CHKD	REMARKS

DESIGNED BY: A. KAJALE
DRAWN BY: S. DHANGAR
SHEET CHK'D BY: M. MAHADEVAN
CROSS CHK'D BY: A. KAJALE
APPROVED BY: G. FURRIER
DATE: DECEMBER 2023

CDM Smith
8310-1 N Capital of Texas Hwy, Suite 250
Austin, TX 78731
Tel: (512) 346-1100
TBPELS Firm Registration No. F-3043

CITY OF GEORGETOWN, TEXAS

CEDAR BREAKS AND D B WOOD LIFT STATIONS

CIVIL STANDARD DETAILS IV

PROJECT NO. 2048-272644
FILE NAME: C004STDT
SHEET NO. CD-4

REUSE OF DOCUMENTS: THESE DOCUMENTS AND DESIGNS PROVIDED BY PROFESSIONAL SERVICE, INCORPORATED HEREIN, ARE THE PROPERTY OF CDM SMITH AND ARE NOT TO BE USED, IN WHOLE OR PART, FOR ANY OTHER PROJECT WITHOUT THE WRITTEN AUTHORIZATION OF CDM SMITH.
© 2023 CDM SMITH ALL RIGHTS RESERVED.

C:\pw_p\MAHADEVANM\d3908821\C009STDT.dwg
Last saved by: MAHADEVANM Time: 12/13/2023 6:48:40 PM
XREFs: [REVW, G-FURRIER, South lake to South fork, Border] Images: []

GUIDELINES FOR DESIGN AND INSTALLATION OF TEMPORARY EROSION AND SEDIMENTATION CONTROLS

TYPE OF STRUCTURE	REACH LENGTH	MAXIMUM DRAINAGE AREA	SLOPE
SILT FENCE	N/A	2 ACRES	0 – 10%
	200 FEET	2 ACRES	10 – 20%
	100 FEET	1 ACRE	20 – 30%
	50 FEET	1/2 ACRE	> 30%
TRIANGLE FILTER DIKE	100 FEET	1/2 ACRE	< 30% SLOPE
	50 FEET	1/4 ACRE	> 30% SLOPE
ROCK BERM *, **	500 FEET	< 5 ACRES	0 – 10%

* FOR ROCK BERM DESIGN WHERE PARAMETERS ARE OTHER THAN STATED, DRAINAGE AREA CALCULATIONS AND ROCK BERM DESIGN MUST BE SUBMITTED FOR REVIEW.

** HIGH SERVICE ROCK BERMS MAY BE REQUIRED IN AREAS OF ENVIRONMENTAL SIGNIFICANCE AS DETERMINED BY THE CITY OF GEORGETOWN.

The Architect/Engineer assumes responsibility for appropriate use of this standard.

REVISION NOTE: ADOPTED 6/21/2006

CITY OF GEORGETOWN
CONSTRUCTION STANDARDS AND DETAILS
TEMPORARY EROSION AND SEDIMENTATION CONTROL GUIDELINES

DRAWING NAME: EC01 | SCALE: NTS | DATE: 1/2003 | DRAWN BY: MRS | APPROVED BY: TRB

DETAIL A
NTS

NOTE: THIS SECTION IS INTENDED TO ASSIST THOSE PERSONS PREPARING WATER POLLUTION ABATEMENT PLANS (WPAP) OR STORM WATER POLLUTION PREVENTION PLANS (SW3P) THAT COMPLY WITH FEDERAL, STATE AND/OR LOCAL STORM WATER REGULATIONS.

1. THE CONTRACTOR TO INSTALL AND MAINTAIN EROSION/SEDIMENTATION CONTROLS AND TREE/NATURAL AREA PROTECTIVE FENCING PRIOR TO ANY SITE PREPARATION WORK (CLEARING, GRUBBING, GRADING, OR EXCAVATION). CONTRACTOR TO REMOVE EROSION/SEDIMENTATION CONTROLS AT THE COMPLETION OF PROJECT AND GRASS RESTORATION.
2. ALL PROJECTS WITHIN THE RECHARGE ZONE OF THE EDWARD'S AQUIFER SHALL SUBMIT A BEST MANAGEMENT PRACTICES AND WATER POLLUTION AND ABATEMENT PLAN TO THE TNRCC FOR APPROVAL PRIOR TO ANY CONSTRUCTION.
3. THE PLACEMENT OF EROSION/SEDIMENTATION CONTROLS TO BE IN ACCORDANCE WITH THE APPROVED EROSION AND SEDIMENTATION CONTROL PLAN AND WATER POLLUTION ABATEMENT PLAN. DEVIATIONS FROM THE APPROVED PLAN MUST BE SUBMITTED TO AND APPROVED BY THE OWNER'S REPRESENTATIVE.
4. ALL PLANTING SHALL BE DONE BETWEEN MAY 1 AND SEPTEMBER 15 EXCEPT AS SPECIFICALLY AUTHORIZED IN WRITING. IF PLANTING IS AUTHORIZED TO BE DONE OUTSIDE THE DATES SPECIFIED, THE SEED SHALL BE PLANTED WITH THE ADDITION OF WINTER FESCUE (KENTUCKY 31) AT A RATE OF 100lb/ACRE. GRASS SHALL BE COMMON BERMUDA GRASS, HULLED, MINIMUM 82% PURE LIVE SEED. ALL GRASS SEED SHALL BE FREE FROM NOXIOUS WEED, GRADE "A" RECENT CROP, RECLEANED AND TREATED WITH APPROPRIATE FUNGICIDE AT TIME OF MIXING. SEED SHALL BE FURNISHED IN SEALED, STANDARD CONTAINERS WITH DEALER'S GUARANTEED ANALYSIS.
5. ALL DISTURBED AREAS TO BE RESTORED AS NOTED IN THE WATER POLLUTION ABATEMENT PLAN.
6. THE PLANTED AREA TO BE IRRIGATED OR SPRINKLED IN A MANNER THAT WILL NOT ERODE THE TOPSOIL, BUT WILL SUFFICIENTLY SOAK THE SOIL TO A DEPTH OF FOUR (4) INCHES. THE IRRIGATION TO OCCUR AT 10–DAY INTERVALS DURING THE FIRST TWO MONTHS TO INSURE GERMINATION AND ESTABLISHMENT OF THE GRASS . RAINFALL OCCURRENCES OF 1/2 INCH OR GREATER TO POSTPONE THE WATERING SCHEDULE ONE WEEK.
7. RESTORATION TO BE ACCEPTABLE WHEN THE GRASS HAS GROWN AT LEAST 1–1/2 INCHES HIGH WITH 95% COVERAGE, PROVIDED NO BARE SPOTS LARGER THAN 25 SQUARE FEET EXIST.
8. A MINIMUM OF FOUR (4) INCHES OF TOPSOIL TO BE PLACED IN ALL AREAS DISTURBED BY CONSTRUCTION.
9. THE CONTRACTOR TO HYDROMULCH OR SOD (AS SHOWN ON PLANS) ALL EXPOSED CUTS AND FILLS UPON COMPLETION OF CONSTRUCTION.
10. EROSION AND SEDIMENTATION CONTROLS TO BE INSTALLED OR MAINTAINED IN A MANNER WHICH DOES NOT RESULT IN SOIL BUILDUP WITHIN TREE DRIPLINE.
11. TO AVOID SOIL COMPACTION, CONTRACTOR SHALL NOT ALLOW VEHICULAR TRAFFIC, PARKING, OR STORAGE OF EQUIPMENT OR MATERIALS IN THE TREE DRIPLINE AREAS.
12. WHERE A FENCE IS CLOSER THAN FOUR (4) FEET TO A TREE TRUNK, PROTECT THE TRUNK WITH STRAPPED–ON PLANKING TO A HEIGHT OF EIGHT (8) FEET (OR TO THE LIMITS OF LOWER BRANCHING) IN ADDITION TO THE FENCING.
13. TREES TO BE REMOVED IN A MANNER WHICH DOES NOT IMPACT TREES TO BE PRESERVED.
14. ANY ROOT EXPOSED BY CONSTRUCTION ACTIVITY TO BE PRUNED FLUSH WITH THE SOIL. BACKFILL ROOT AREAS WITH GOOD QUALITY TOPSOIL AS SOON AS POSSIBLE. IF EXPOSED ROOT AREAS ARE NOT BACKFILLED WITHIN TWO DAYS, COVER THEM WITH ORGANIC MATERIAL IN A MANNER WHICH REDUCES SOIL TEMPERATURE AND MINIMIZES WATER LOSS DUE TO EVAPORATION.
15. CONTRACTOR TO PRUNE VEGETATION TO PROVIDE CLEARANCE FOR STRUCTURES, VEHICULAR TRAFFIC, AND EQUIPMENT BEFORE DAMAGE OCCURS (RIPPING OF BRANCHES, ETC.). ALL FINISHED PRUNING TO BE DONE ACCORDING TO RECOGNIZED, APPROVED STANDARDS OF THE INDUSTRY (REFERENCE THE "NATIONAL ARBORIST ASSOCIATION PRUNING STANDARDS FOR SHADE TREES").
16. THE CONTRACTOR IS TO INSPECT THE CONTROLS AT WEEKLY INTERVALS AND AFTER EVERY RAINFALL EXCEEDING 1/4 INCH TO VERIFY THAT THEY HAVE NOT BEEN SIGNIFICANTLY DISTURBED. ANY ACCUMULATED SEDIMENT AFTER A SIGNIFICANT RAINFALL TO BE REMOVED AND PLACED IN THE OWNER DESIGNATED SPOIL DISPOSAL SITE. THE CONTRACTOR TO CONDUCT PERIODIC INSPECTIONS OF ALL EROSION/SEDIMENTATION CONTROLS AND TO MAKE ANY REPAIRS OR MODIFICATIONS NECESSARY TO ASSURE CONTINUED EFFECTIVE OPERATION OF EACH DEVICE.
17. WHERE THERE IS TO BE AN APPROVED GRADE CHANGE, IMPERMEABLE PAVING SURFACE, TREE WELL, OR OTHER SUCH SITE DEVELOPMENT IMMEDIATELY ADJACENT TO A PROTECTED TREE, ERECT THE FENCE APPROXIMATELY TWO TO FOUR FEET (2'–4') BEHIND THE AREA IN QUESTION.
18. NO ABOVE AND/OR BELOW GROUND TEMPORARY FUEL STORAGE FACILITIES TO BE STORED ON THE PROJECT SITE.
19. IF EROSION AND SEDIMENTATION CONTROL SYSTEMS ARE EXISTING FROM PRIOR CONTRACTS, OWNER'S REPRESENTATIVE AND THE CONTRACTOR TO EXAMINE THE EXISTING EROSION AND SEDIMENTATION CONTROL SYSTEMS FOR DAMAGE PRIOR TO CONSTRUCTION. ANY DAMAGE TO PREEXISTING EROSION AND SEDIMENTATION CONTROLS NOTED TO BE REPAIRED AT OWNERS EXPENSE.
20. INTENTIONAL RELEASE OF VEHICLE OR EQUIPMENT FLUIDS ONTO THE GROUND IS NOT ALLOWED. CONTAMINATED SOIL RESULTING FROM ACCIDENTAL SPILL TO BE REMOVED AND DISPOSED OF PROPERLY.

The Architect/Engineer assumes responsibility for appropriate use of this standard.

REVISION NOTE: ADOPTED 6/21/2006

CITY OF GEORGETOWN
CONSTRUCTION STANDARDS AND DETAILS
EROSION AND SEDIMENTATION AND TREE PROTECTION NOTES

DRAWING NAME: EC01A | SCALE: NTS | DATE: 1/2003 | DRAWN BY: MRS | APPROVED BY: TRB

DETAIL B
NTS

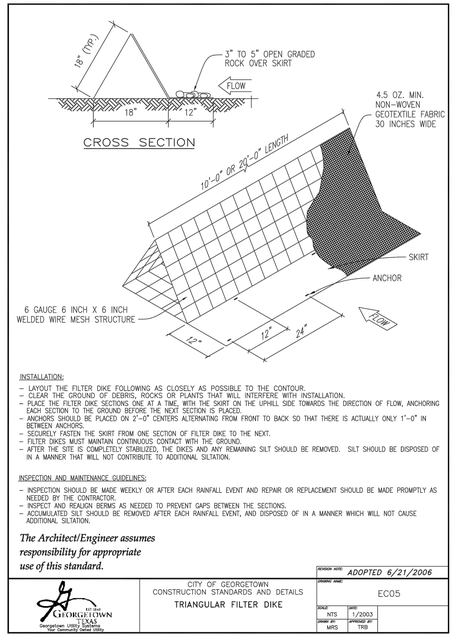

INSTALLATION:
- LAYOUT THE FILTER DIKE FOLLOWING AS CLOSELY AS POSSIBLE TO THE CONTOUR.
- CLEAR THE GROUND OF DEBRIS, ROCKS OR PLANTS THAT WILL INTERFERE WITH INSTALLATION.
- PLACE THE FILTER DIKE SECTIONS ONE AT A TIME, WITH THE SKIRT ON THE UPHILL SIDE TOWARDS THE DIRECTION OF FLOW, ANCHORING EACH SECTION TO THE GROUND BEFORE THE NEXT SECTION IS PLACED.
- ANCHORS SHOULD BE PLACED ON 2'–0" CENTERS ALTERNATING FROM FRONT TO BACK SO THAT THERE IS ACTUALLY ONLY 1'–0" IN BETWEEN ANCHORS.
- SECURELY FASTEN THE SKIRT FROM ONE SECTION OF FILTER DIKE TO THE NEXT.
- FILTER DIKES MUST MAINTAIN CONTINUOUS CONTACT WITH THE GROUND.
- AFTER THE SITE IS COMPLETELY STABILIZED, THE DIKES AND ANY REMAINING SILT SHOULD BE REMOVED. SILT SHOULD BE DISPOSED OF IN A MANNER THAT WILL NOT CONTRIBUTE TO ADDITIONAL SILTATION.

INSPECTION AND MAINTENANCE GUIDELINES:
- INSPECTION SHOULD BE MADE WEEKLY OR AFTER EACH RAINFALL EVENT AND REPAIR OR REPLACEMENT SHOULD BE MADE PROMPTLY AS NEEDED BY THE CONTRACTOR.
- INSPECT AND REALIGN BERMS AS NEEDED TO PREVENT GAPS BETWEEN THE SECTIONS.
- ACCUMULATED SILT SHOULD BE REMOVED AFTER EACH RAINFALL EVENT, AND DISPOSED OF IN A MANNER WHICH WILL NOT CAUSE ADDITIONAL SILTATION.

The Architect/Engineer assumes responsibility for appropriate use of this standard.

REVISION NOTE: ADOPTED 6/21/2006

CITY OF GEORGETOWN
CONSTRUCTION STANDARDS AND DETAILS
TRIANGULAR FILTER DIKE

DRAWING NAME: EC05 | SCALE: NTS | DATE: 1/2003 | DRAWN BY: MRS | APPROVED BY: TRB

DETAIL C
NTS

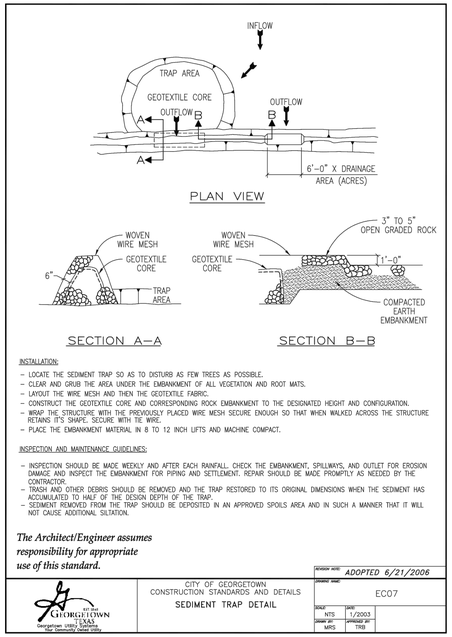

INSTALLATION:
- LOCATE THE SEDIMENT TRAP SO AS TO DISTURB AS FEW TREES AS POSSIBLE.
- CLEAR AND GRUB THE AREA UNDER THE EMBANKMENT OF ALL VEGETATION AND ROOT MATS.
- LAYOUT THE WIRE MESH AND THEN THE GEOTEXTILE FABRIC.
- CONSTRUCT THE GEOTEXTILE CORE AND CORRESPONDING ROCK EMBANKMENT TO THE DESIGNATED HEIGHT AND CONFIGURATION.
- WRAP THE STRUCTURE WITH THE PREVIOUSLY PLACED WIRE MESH SECURE ENOUGH SO THAT WHEN WALKED ACROSS THE STRUCTURE RETAINS IT'S SHAPE. SECURE WITH TIE WIRE.
- PLACE THE EMBANKMENT MATERIAL IN 8 TO 12 INCH LIFTS AND MACHINE COMPACT.

INSPECTION AND MAINTENANCE GUIDELINES:
- INSPECTION SHOULD BE MADE WEEKLY AND AFTER EACH RAINFALL. CHECK THE EMBANKMENT, SPILLWAYS, AND OUTLET FOR EROSION DAMAGE AND INSPECT THE EMBANKMENT FOR PIPING AND SETTLEMENT. REPAIR SHOULD BE MADE PROMPTLY AS NEEDED BY THE CONTRACTOR.
- TRASH AND OTHER DEBRIS SHOULD BE REMOVED AND THE TRAP RESTORED TO ITS ORIGINAL DIMENSIONS WHEN THE SEDIMENT HAS ACCUMULATED TO HALF OF THE DESIGN DEPTH OF THE TRAP.
- SEDIMENT REMOVED FROM THE TRAP SHOULD BE DEPOSITED IN AN APPROVED SPOILS AREA AND IN SUCH A MANNER THAT IT WILL NOT CAUSE ADDITIONAL SILTATION.

The Architect/Engineer assumes responsibility for appropriate use of this standard.

REVISION NOTE: ADOPTED 6/21/2006

CITY OF GEORGETOWN
CONSTRUCTION STANDARDS AND DETAILS
SEDIMENT TRAP DETAIL

DRAWING NAME: EC07 | SCALE: NTS | DATE: 1/2003 | DRAWN BY: MRS | APPROVED BY: TRB

DETAIL D
NTS

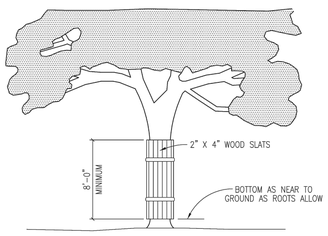

NOTES:
1. WHERE ANY EXCEPTIONS RESULT IN A FENCE BEING CLOSER THAN FOUR FEET (4'–0") TO A TREE TRUNK; PROTECT THE TRUNK WITH STRAPPED–ON–PLANKING TO A HEIGHT OF EIGHT FEET (8'–0"), OR TO THE LIMITS OF LOWER BRANCHING IN ADDITION TO THE REDUCED FENCING PROVIDED.
2. ANY ROOTS EXPOSED BY CONSTRUCTION ACTIVITY SHALL BE PRUNED FLUSH WITH THE SOIL. BACKFILL ROOT AREAS WITH GOOD QUALITY TOP SOIL AS SOON AS POSSIBLE. IF EXPOSED ROOT AREAS ARE NOT BACKFILLED WITHIN TWO (2) DAYS, COVER THEM WITH ORGANIC MATERIAL IN A MANNER WHICH REDUCES SOIL TEMPERATURE, AND MINIMIZES WATER LOSS DUE TO EVAPORATION.
3. PRIOR EXCAVATION OR GRADE CUTTING WITHIN TREE DRIPLINE, MAKE A CLEAN CUT BETWEEN THE DISTURBED AND UNDISTURBED ROOT ZONES WITH A ROCK SAW OR SIMILAR EQUIPMENT, TO MINIMIZE DAMAGE TO REMAINING ROOTS.
4. TREES MOST HEAVILY IMPACTED BY CONSTRUCTION ACTIVITIES SHOULD BE WATERED DEEPLY ONCE A WEEK DURING PERIODS OF HOT, DRY WEATHER. TREE CROWNS SHOULD BE SPRAYED WITH WATER PERIODICALLY TO REDUCE DUST ACCUMULATION ON THE LEAVES.
5. ANY TRENCHING REQUIRED FOR THE INSTALLATION OF LANDSCAPE IRRIGATION SHALL BE PLACED AS FAR FROM EXISTING TREE TRUNKS AS POSSIBLE.
6. NO LANDSCAPE TOPSOIL DRESSING GREATER THE FOUR INCHES (4") SHALL BE PERMITTED WITHIN THE DRIPLINE OF A TREE. NO SOIL IS PERMITTED ON THE ROOT FLARE OF ANY TREE.
7. PRUNING TO PROVIDE CLEARANCE FOR STRUCTURES, VEHICULAR TRAFFIC AND EQUIPMENT SHALL TAKE PLACE BEFORE CONSTRUCTION BEGINS.

The Architect/Engineer assumes responsibility for appropriate use of this standard.

REVISION NOTE: ADOPTED 6/21/2006

CITY OF GEORGETOWN
CONSTRUCTION STANDARDS AND DETAILS
TREE PROTECTION – WOOD SLATS

DRAWING NAME: EC10 | SCALE: NTS | DATE: 1/2003 | DRAWN BY: MRS | APPROVED BY: TRB

DETAIL E
NTS

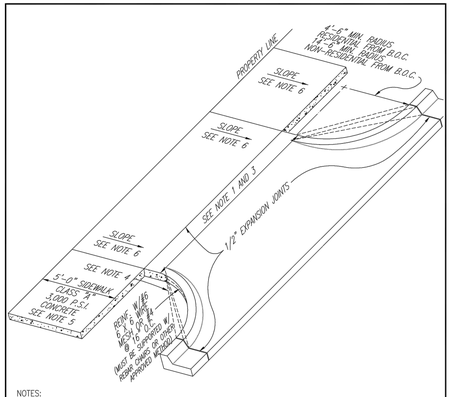

NOTES:
1. MAXIMUM WIDTH OF APPROACH SHALL BE 24'–0" FOR RESIDENTIAL, 30'–0" FOR NON–RESIDENTIAL UNDIVIDED AND 45'–0" FOR NON–RESIDENTIAL DIVIDED.
2. DRIVEWAY PERMITS TO BE ACQUIRED FROM CITY INSPECTION OFFICE.
3. MINIMUM WIDTH OF APPROACH SHALL BE 10'–0" FOR RESIDENTIAL AND 15'–0" FOR NON–RESIDENTIAL.
4. LINEAR "RADIUS" AT CORNERS, PERMITTED FOR "SINGLE FAMILY" OR "TWO FAMILY" RESIDENTIAL DRIVEWAY APPROACH.
5. SIDEWALK LOCATION TO BE APPROVED BY CITY ENGINEER PRIOR TO FINAL DESIGN.
6. SLOPE 1/8" PER FOOT USUAL, NOT TO EXCEED 1/4" PER FOOT.
7. DRIVEWAY APPROACH THICKNESS TO BE A MIN. OF 6".

The Architect/Engineer assumes responsibility for appropriate use of this standard.

REVISION NOTE: ADOPTED 6/21/2006

CITY OF GEORGETOWN
CONSTRUCTION STANDARDS AND DETAILS
CONCRETE DRIVEWAY APPROACH TYPICAL

DRAWING NAME: SD15 | SCALE: NTS | DATE: 1/2003 | DRAWN BY: MRS | APPROVED BY: TRB

DETAIL F
NTS

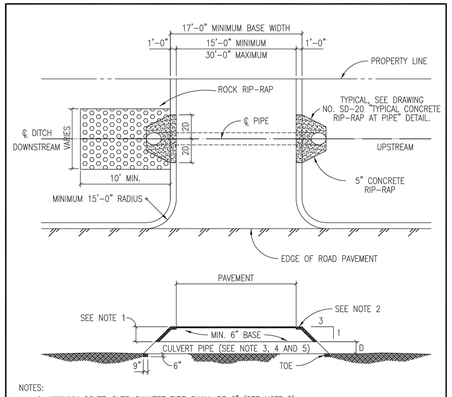

NOTES:
1. MINIMUM COVER OVER CULVERT PIPE SHALL BE 6" (SEE NOTE 5).
2. 5" CONCRETE RIP–RAP SHALL BE INSTALLED.
3. CULVERT PIPE TO BE MINIMUM OF 12" DIAMETER.
4. CULVERT PIPE MATERIAL TO BE R.C.P. (CLASS III), UNLESS PRIOR APPROVAL IS GRANTED BY THE CITY OF GEORGETOWN.
5. MINIMUM COVER OVER CULVERT PIPE SHALL PROVIDE H20 LOADING.
6. BACKFILL AROUND CULVERT PIPE SHALL BE SELECT MATERIAL TO BE PLACED AND COMPACTED TO 95% TEX–114E.
7. ROCK RIP–RAP SHALL SHALL EXTEND 10' FROM THE DOWN STREAM SIDE USING THE AVERAGE STONE SIZE DIA. OF 8" AT A DEPTH OF 16" (MINIMUM).
8. MINIMUM CHANNEL SIDE SLOPE SHALL BE 4:1.

The Architect/Engineer assumes responsibility for appropriate use of this standard.

REVISION NOTE: ADOPTED 6/21/2006

CITY OF GEORGETOWN
CONSTRUCTION STANDARDS AND DETAILS
RURAL NON–RESIDENTIAL UNDIVIDED DRIVEWAY APPROACH WITH CULVERT PIPE

DRAWING NAME: SD18 | SCALE: NTS | DATE: 1/2003 | DRAWN BY: MRS | APPROVED BY: TRB

DETAIL G
NTS

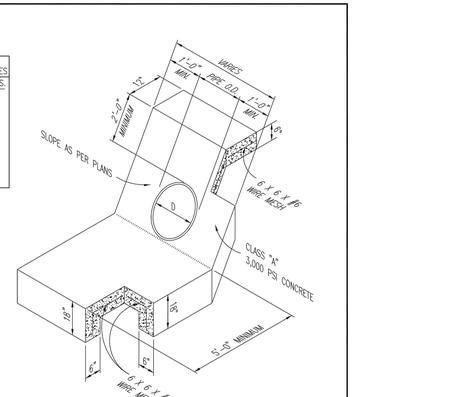

NOTES:
1. WHEN HEADWALLS AND WINGWALLS ARE REQUIRED; THEY SHALL CONFORM TO THE TEXAS DEPARTMENT OF TRANSPORTATION STANDARDS, OR AS DIRECTED BY THE CITY.
2. ENERGY DISSIPATERS SHALL BE REQUIRED IF PIPE VELOCITY IS GREATER THAN 5.0 F.P.S. OR AS DIRECTED BY THE CITY OF GEORGETOWN.
3. SUPPORT REINFORCING WIRE MESH REQUIRED AS SUPPORT FOR APPROACH SLAB AND SHALL BE SUPPORTED BY REBAR CHAIRS OR OTHER APPROVED METHODS.

The Architect/Engineer assumes responsibility for appropriate use of this standard.

REVISION NOTE: ADOPTED 6/21/2006

CITY OF GEORGETOWN
CONSTRUCTION STANDARDS AND DETAILS
TYPICAL CONCRETE RIP–RAP AT PIPE

DRAWING NAME: SD19 | SCALE: NTS | DATE: 1/2003 | DRAWN BY: MRS | APPROVED BY: TRB

DETAIL H
NTS

STATE OF TEXAS
GERALD S. FURRIER
129811
LICENSED PROFESSIONAL ENGINEER
12/11/2023

REV. NO.	DATE	DRWN	CHKD	REMARKS

DESIGNED BY: A. KAJALE
DRAWN BY: S. DHANGAR
SHEET CHK'D BY: M. MAHADEVAN
CROSS CHK'D BY: A. KAJALE
APPROVED BY: G. FURRIER
DATE: DECEMBER 2023

CDM Smith
8310-1 N Capital of Texas Hwy, Suite 250
Austin, TX 78731
Tel: (512) 346-1100
TBPELS Firm Registration No. F-3043

CITY OF GEORGETOWN, TEXAS

CEDAR BREAKS AND D B WOOD LIFT STATIONS

CIVIL STANDARD DETAILS V

PROJECT NO. 2048–272644
FILE NAME: C005STDT

SHEET NO.
CD-5

XREFs: [REVIN_G-FURRIER_South lake to South fork_Border] Images: []
Last saved by: MAHADEVANM Time: 12/13/2023 6:48:40 PM
C:\pw_pt\MAHADEVANM\35980821\C005STDT.dwg
© 2023 CDM SMITH ALL RIGHTS RESERVED.
REUSE OF DOCUMENTS: THESE DOCUMENTS AND DESIGNS PROVIDED BY PROFESSIONAL SERVICE, INCORPORATED HEREIN, ARE THE PROPERTY OF CDM SMITH AND ARE NOT TO BE USED, IN WHOLE OR PART, FOR ANY OTHER PROJECT WITHOUT THE WRITTEN AUTHORIZATION OF CDM SMITH.
Plotted: 12/13/2023 2:46:08 PM

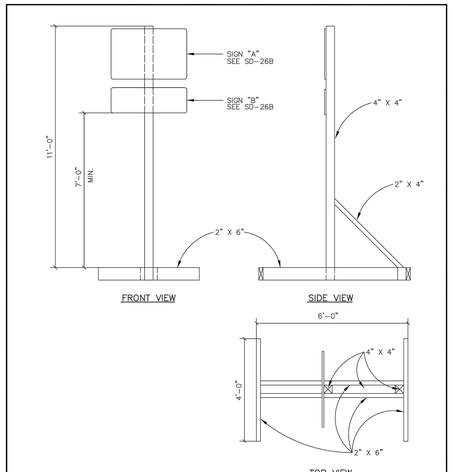

NOTES:
1. ALL MATERIALS SHALL BE FURNISHED BY THE CONTRACTOR WITH THE EXCEPTION OF THE CITY OF GEORGETOWN G.U.S. LOGO WHICH WILL BE FURNISHED BY THE CITY.
2. ALL SIGNS TO BE IN CONFORMANCE WITH THE CURRENT EDITION OF THE TEXAS MANUAL OF UNIFORM TRAFFIC CONTROL DEVICES (TMUTCD).

The Architect/Engineer assumes responsibility for appropriate use of this standard.

REVISION NOTE: ADOPTED 6/21/2006

CITY OF GEORGETOWN
CONSTRUCTION STANDARDS AND DETAILS
PROJECT SIGN TYPE II

DRAWING NAME: SD26
SCALE: NTS | DATE: 1/2003
DRAWN BY: MRS | APPROVED BY: TRB

DETAIL A
NTS

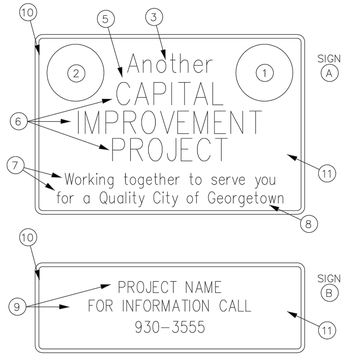

NOTES:
1. CITY SEAL (FURNISHED BY THE CITY)
2. G.U.S. LOGO (FURNISHED BY THE CITY)
3. (1 3/4") BLUE LETTERS
4. (2 1/2") BLUE LETTERS
5. (1 1/4") SPACE
6. (3") BLUE LETTERS
7. (2") RED UPPER, (1 1/2") RED LOWER CASE LETTERS
8. (2") BLUE UPPER, (1 1/2") BLUE LOWER CASE LETTERS (City of Georgetown)
9. (10") LETTERS
10. (1 3/8") BLUE BORDER
11. REFLECTIVE SILVER SHEETING .080 ALUMINUM 2290, TRANSPARENT RED PAINT 712, BLUE PAINT 710, 3M CO. OR APPROVED EQUIVALENT.
12. REFER TO SHEET SD-26A

The Architect/Engineer assumes responsibility for appropriate use of this standard.

REVISION NOTE: ADOPTED 6/21/2006

CITY OF GEORGETOWN
CONSTRUCTION STANDARDS AND DETAILS
STANDARD STREET SIGN DETAIL II

DRAWING NAME: SD27
SCALE: NTS | DATE: 1/2003
DRAWN BY: MRS | APPROVED BY: TRB

DETAIL B
NTS

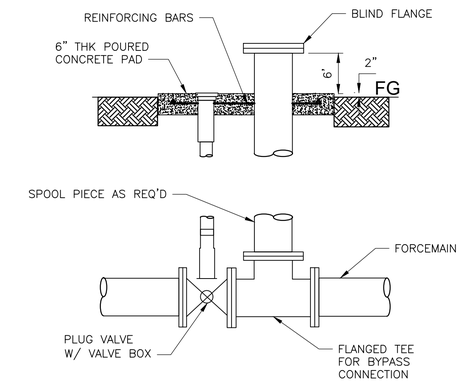

FORCEMAIN BYPASS CONNECTION

DETAIL E
NTS

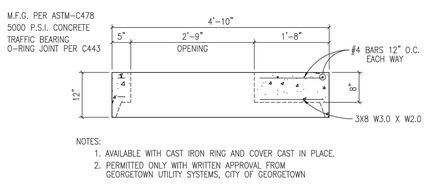

NOTES:
1. AVAILABLE WITH CAST IRON RING AND COVER CAST IN PLACE.
2. PERMITTED ONLY WITH WRITTEN APPROVAL FROM GEORGETOWN UTILITY SYSTEMS, CITY OF GEORGETOWN

The Architect/Engineer assumes responsibility for appropriate use of this standard.

REVISION NOTE: ADOPTED 6/21/2006

CITY OF GEORGETOWN
CONSTRUCTION STANDARDS AND DETAILS
48" MANHOLE FLAT LID

DRAWING NAME: WW09
SCALE: NTS | DATE: 1/2003
DRAWN BY: MRS | APPROVED BY: TRB

DETAIL C
NTS

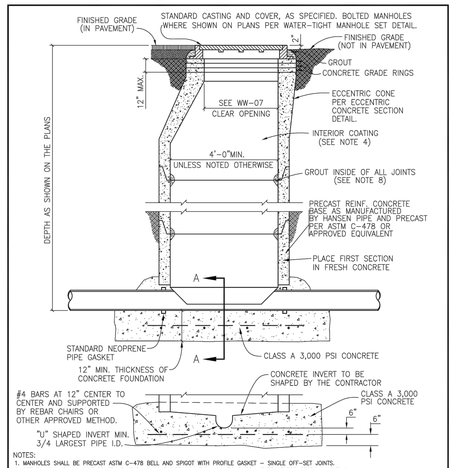

NOTES:
1. MANHOLES SHALL BE PRECAST ASTM C-478 BELL AND SPIGOT WITH PROFILE GASKET – SINGLE OFF-SET JOINTS.
2. SEE PLANS AND MANHOLE SCHEDULE, FOR MANHOLE SIZE, LOCATION, CONFIGURATION, TYPE OF TOP SECTION, VENTING REQUIREMENTS, PIPE SIZE AND TYPES.
3. SEE SPECIFICATIONS ON MATERIALS AND CONSTRUCTION.
4. AN 80 MIL COAT OF RAVEN LINING SYSTEMS, RAVEN 405 ULTRA HIGH BUILD EPOXY COATING, OR SPRAY WALL EPOXY COATING, OR APPROVED EQUAL, TO BE APPLIED TO ENTIRE INTERIOR OF EACH WASTEWATER MANHOLE AND UNDERSIDE OF FLAT TOPS.
5. ALL MANHOLE COVERS SHALL BE BOLTED AND GASKETTED WHEN MANHOLES ARE LOCATED OUT FROM PAVEMENT.
6. MANHOLES TO BE VENTED ARE IDENTIFIED ON MANHOLE SCHEDULE. REFERENCE MANHOLE VENT DETAIL.
7. MANHOLES ARE TO BE DESIGNED TO RESIST LATERAL AND VERTICAL SOIL FORCES RESULTING FROM MANHOLE DEPTH. ADDITIONALLY, MANHOLES LOCATED IN PAVEMENT TO BE DESIGNED FOR HS-20 TRAFFIC LOADS.
8. GROUT SHALL MEET THE REQUIREMENTS AS STATED BY THE COATING MANUFACTURER.
9. MANHOLE BASE BEDDING MATERIAL SPECS. FOR 3/4" WASHED GRAVEL:
   SIEVE SIZE 2", PERCENT (%) RETAINED 0 SIEVE SIZE 1 1/2", % RETAINED 0-10
   SIEVE SIZE 1", % RETAINED 45-80 SIEVE SIZE 3/4", % RETAINED 85-100
   SIEVE SIZE 3/8", % RETAINED 95-100
10. ALL PVC PIPE SHALL BE REMOVED FROM INVERT.

The Architect/Engineer assumes responsibility for appropriate use of this standard.

REVISION NOTE: ADOPTED 6/21/2006

CITY OF GEORGETOWN
CONSTRUCTION STANDARDS AND DETAILS
PRECAST MANHOLE ON
CAST-IN-PLACE FOUNDATION

DRAWING NAME: WW20
SCALE: NTS | DATE: 1/2006
DRAWN BY: MRS | APPROVED BY: TRB

DETAIL D
NTS

GERALD S. FURRIER
STATE OF TEXAS
129811
LICENSED
PROFESSIONAL ENGINEER
12/11/2023

REV. NO.	DATE	DRWN	CHKD	REMARKS

DESIGNED BY: A. KAJALE
DRAWN BY: S. DHANGAR
SHEET CHK'D BY: M. MAHADEVAN
CROSS CHK'D BY: A. KAJALE
APPROVED BY: G. FURRIER
DATE: DECEMBER 2023

CDM Smith
8310-1 N Capital of Texas Hwy, Suite 250
Austin, TX 78731
Tel: (512) 346-1100
TBPELS Firm Registration No. F-3043

CITY OF GEORGETOWN, TEXAS

CEDAR BREAKS AND D B WOOD LIFT STATIONS

CIVIL STANDARD DETAILS VI

PROJECT NO. 2048-272644
FILE NAME: C006STDT

SHEET NO.
CD-6

XREFs: [REVW_G-FURRIER_South lake to South fork_Border] Images: []
Last saved by MAHADEVANM Time: 12/13/2023 9:58:44 PM
C:\pw_ul1\MAHADEVANM\36908621\C006STDT.dwg
© 2023 CDM SMITH ALL RIGHTS RESERVED
REUSE OF DOCUMENTS: THESE DOCUMENTS AND DESIGNS PROVIDED BY PROFESSIONAL SERVICE, INCORPORATED HEREIN, ARE THE PROPERTY OF CDM SMITH AND ARE NOT TO BE USED, IN WHOLE OR PART, FOR ANY OTHER PROJECT WITHOUT THE WRITTEN AUTHORIZATION OF CDM SMITH.
Plotted: 12/13/2023 2:46:37 PM

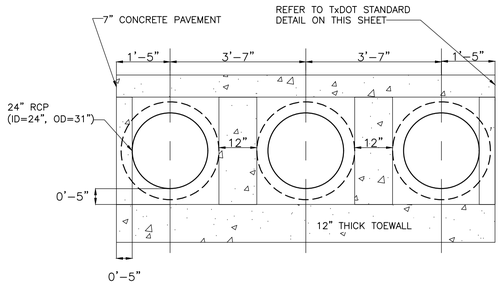

24" RCP SAFETY END TREATMENT

DETAIL A
NTS

NOTE:

1. RCP MITERED ENDS SHALL BE INSTALLED AT 6:1 CROSS SLOPE OR FLATTER.

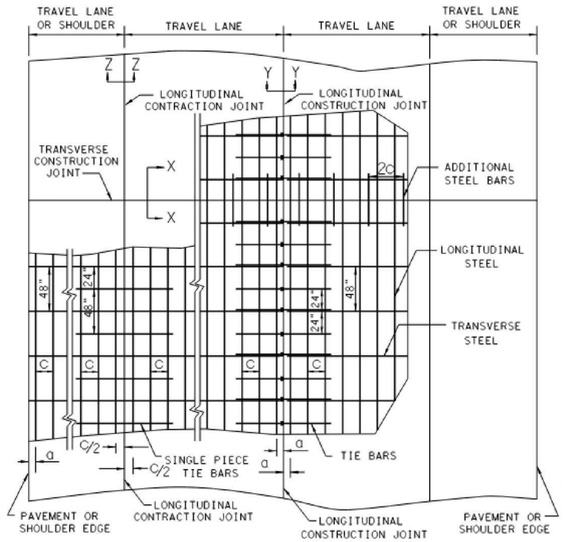

TYPICAL PAVEMENT LAYOUT

PLAN VIEW (NOT TO SCALE)

DETAIL B
NTS

TABLE NO. 1 LONGITUDINAL STEEL					
SLAB THICKNESS AND BAR SIZE		REGULAR STEEL BARS	FIRST SPACING AT EDGE OR JOINT	ADDITIONAL STEEL BARS AT TRANSVERSE CONSTRUCTION JOINT (SECTION X-X)	
T (IN.)	BAR SIZE	SPACING C (IN.)	SPACING a (IN.)	SPACING 2 X C (IN.)	LENGTH L (IN.)
7.0	#5	6.5	3 TO 4	13	50
7.5	#5	6.0	3 TO 4	12	50
8.0	#6	9.0	3 TO 4	18	50
8.5	#6	8.5	3 TO 4	17	50
9.0	#6	8.0	3 TO 4	16	50
9.5	#6	7.5	3 TO 4	15	50
10.0	#6	7.0	3 TO 4	14	50
10.5	#6	6.75	3 TO 4	13.5	50
11.0	#6	6.5	3 TO 4	13	50
11.5	#6	6.25	3 TO 4	12.5	50
12.0	#6	6.0	3 TO 4	12	50
12.5	#6	5.75	3 TO 4	11.5	50
13.0	#6	5.5	3 TO 4	11	50

TABLE NO. 2 TRANSVERSE STEEL AND TIE BARS						
SLAB THICKNESS (IN.)	TRANSVERSE STEEL		TIE BARS AT LONGITUDINAL CONTRACTION JOINT (SECTION Z-Z)		TIE BARS AT LONGITUDINAL CONSTRUCTION JOINT (SECTION Y-Y)	
	BAR SIZE	SPACING (IN.)	BAR SIZE	SPACING (IN.)	BAR SIZE	SPACING (IN.)
7.0 - 7.5	#5	48	#5	48	#5	24
8.0 - 13.0	#5	48	#6	48	#6	24

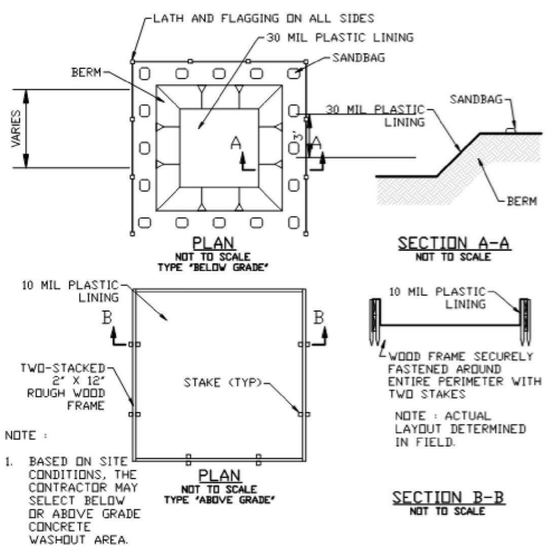

NOTE :

1. BASED ON SITE CONDITIONS, THE CONTRACTOR MAY SELECT BELOW OR ABOVE GRADE CONCRETE WASHOUT AREA.

DETAIL C
NTS

GENERAL NOTES

1. DETAILS FOR PAVEMENT WIDTH, PAVEMENT THICKNESS AND THE CROWN CROSS-SLOPE SHALL BE SHOWN ELSEWHERE IN THE PLANS. PAVEMENTS WIDER THAN 100 FT. WITHOUT A FREE LONGITUDINAL JOINT ARE NOT COVERED BY THIS STANDARD.
2. USE COARSE AGGREGATES WITH A RATED COEFFICIENT OF THERMAL EXPANSION (CoTE) OF NOT MORE THAN 5.5 X 10^{-6} IN/IN/ °F AS LISTED IN THE CONCRETE RATED SOURCE QUALITY CATALOG (CRSQC).
3. ALL THE REINFORCING STEEL AND TIE BARS SHALL BE DEFORMED STEEL BARS CONFORMING TO ASTM A 615 (GRADE 60) OR ASTM A 996 (GRADE 60) OR ABOVE. STEEL BAR SIZES AND SPACINGS SHALL CONFORM TO TABLE NO. 1 AND TABLE NO. 2.
4. STEEL BAR PLACEMENT TOLERANCE SHALL BE +/- 1 IN. HORIZONTALLY AND +/- 0.5 IN. VERTICALLY. CALCULATED AVERAGE BAR SPACING (CONCRETE PLACEMENT WIDTH / NUMBER OF LONGITUDINAL BARS) SHALL CONFORM TO TABLE NO. 1
5. PAVEMENT WIDTHS OF MORE THAN 15 FT. SHALL HAVE A LONGITUDINAL JOINT (SECTION Z-Z OR SECTION Y-Y). THESE JOINTS SHALL BE LOCATED WITHIN 6 IN. OF THE LANE LINE UNLESS THE JOINT LOCATION IS SHOWN ELSEWHERE ON THE PLANS.
6. THE SAW CUT DEPTH FOR THE LONGITUDINAL CONTRACTION JOINT (SECTION Z-Z) SHALL BE ONE THIRD OF THE SLAB THICKNESS (T/3).
7. WHEN TYING CONCRETE GUTTER AT A LONGITUDINAL JOINT, THE TIE BAR LENGTH OR POSITION MAY BE ADJUSTED. PROVIDE 3 IN. OF CONCRETE COVER FROM THE BACK OF GUTTER TO THE END OF TIE BAR.
8. REPLACE MISSING OR DAMAGED TIE BARS WITHOUT ADDITIONAL COMPENSATION BY DRILLING MIN. 10 IN. DEEP AND GROUTING TIE BARS WITH TYPE III, CLASS C EPOXY. MEET THE PULL-OUT TEST REQUIREMENTS IN ITEM 361.
9. OMIT TIE BARS LOCATED WITHIN 18-IN. OF THE TRANSVERSE CONSTRUCTION JOINTS (SECTION X-X). USE HAND-OPERATED IMMERSION VIBRATORS TO CONSOLIDATE THE CONCRETE ADJACENT TO ALL FORMED JOINTS.
10. LONGITUDINAL REINFORCING STEEL SPLICES SHALL BE A MINIMUM OF 25 IN. STAGGER THE LAP LOCATIONS SO THAT NO MORE THAN 1/3 OF THE LONGITUDINAL STEEL IS SPLICED IN ANY GIVEN 12-FT. WIDTH AND 2-FT. LENGTH OF THE PAVEMENT.
11. THE DETAIL FOR THE JOINT SEALANT AND RESERVOIR IS SHOWN ON STANDARD SHEET "CONCRETE PAVING DETAILS, JOINT SEALS."

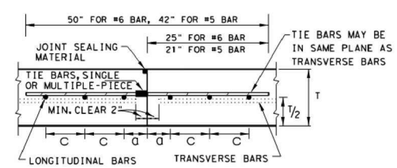

LONGITUDINAL CONSTRUCTION JOINT
SECTION Y - Y

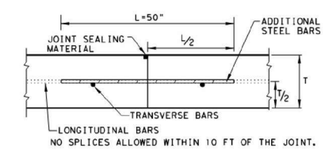

TRANSVERSE CONSTRUCTION JOINT
SECTION X - X

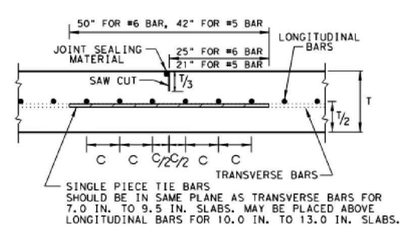

LONGITUDINAL CONTRACTION JOINT
SECTION Z - Z

STATE OF TEXAS
GERALD S. FURRIER
129811
LICENSED
PROFESSIONAL ENGINEER
12/11/2023

REV. NO.	DATE	DRWN	CHKD	REMARKS

DESIGNED BY: A. KAJALE
DRAWN BY: S. DHANGAR
SHEET CHK'D BY: M. MAHADEVAN
CROSS CHK'D BY: A. KAJALE
APPROVED BY: G. FURRIER
DATE: DECEMBER 2023

CDM Smith
8310-1 N Capital of Texas Hwy, Suite 250
Austin, TX 78731
Tel: (512) 346-1100
TBPELS Firm Registration No. F-3043

CITY OF GEORGETOWN, TEXAS

CEDAR BREAKS AND D B WOOD LIFT STATIONS

CIVIL STANDARD DETAILS VII

PROJECT NO. 2048-272644
FILE NAME: C007STDT
SHEET NO.
CD-7

XREFs: [South lake to South fork_Border] Images: []
Last saved by: MAHADEVANM, Time: 12/13/2023 9:32:12 PM
C:\pw_pt\MAHADEVANM\d3908821\C007STDT.dwg
© 2023 CDM SMITH ALL RIGHTS RESERVED.
REUSE OF DOCUMENTS: THESE DOCUMENTS AND DESIGNS PROVIDED BY PROFESSIONAL SERVICE, INCORPORATED HEREIN, ARE THE PROPERTY OF CDM SMITH AND ARE NOT TO BE USED, IN WHOLE OR PART, FOR ANY OTHER PROJECT WITHOUT THE WRITTEN AUTHORIZATION OF CDM SMITH.

Plotted: 12/13/2023 2:47:05 PM

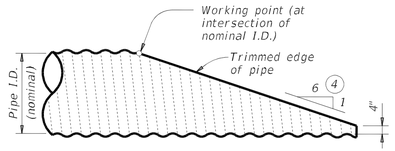

NOTE: All cross pipes, calculations, and dimensions are based on the pipe culverts mitered as shown in this detail. Alternate styles of mitered ends will require that appropriate adjustments be made to the values presented on this standard.

SIDE ELEVATION OF TYPICAL PIPE CULVERT MITER

(Showing corrugated metal pipe (CMP) culvert Details at reinforced concrete pipe (RCP) culvert are similar.)

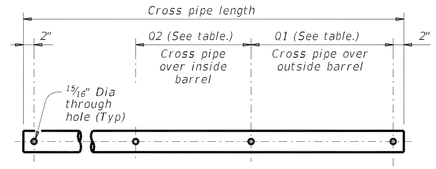

PIPE WITH BOLTED ANCHOR

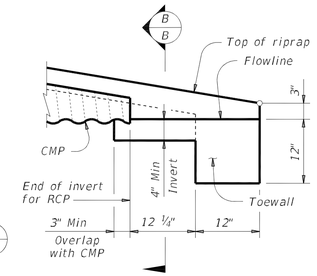

DETAIL "A"

(Showing invert with corrugated metal pipe (CMP) culvert. Reinforced concrete pipe (RCP) culvert details are similar. Cross pipes not shown for clarity.)

CROSS PIPE LENGTHS, REQUIRED PIPE SIZES, AND RIPRAP QUANTITIES (2)							
Nominal Culvert I.D.	Conc Riprap (CY) (6)	Pipe Culvert Spa ~ G	Single Barrel ~ Q1	Multi-Barrel ~ Q1	Q2	Conditions for Use of Cross Pipes	Cross Pipe Sizes
24"	0.9	1'-7"	N/A	3'-6"	3'-7"	3 or more pipe culverts	3" Std (3.500" O.D.)

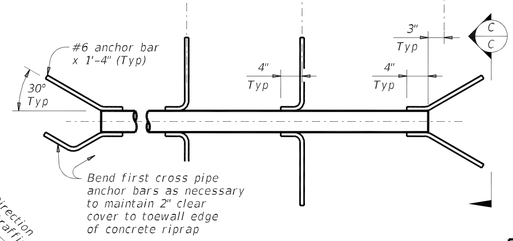

PIPE WITH ANCHOR BARS

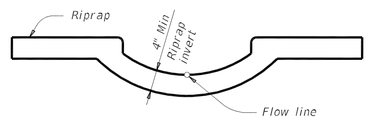

SECTION B-B

(Cross pipes not shown for clarity.)

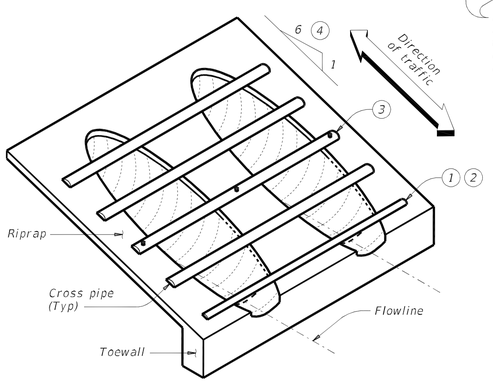

ISOMETRIC VIEW OF TYPICAL INSTALLATION

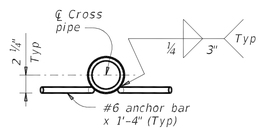

SECTION C-C

CROSS PIPE DETAILS

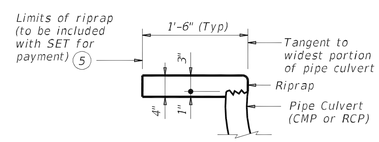

SHOWING TYPICAL PIPE CULVERT AND RIPRAP

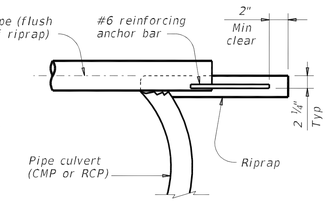

SHOWING CROSS PIPE WITH ANCHOR BAR

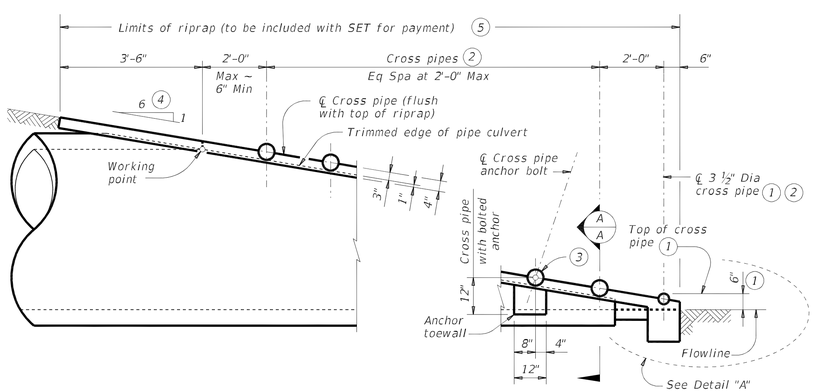

SIDE ELEVATION OF CAST-IN-PLACE CONCRETE

(Showing reinforced concrete pipe (RCP) culvert. Details at corrugated metal pipe (CMP) culvert are similar.)

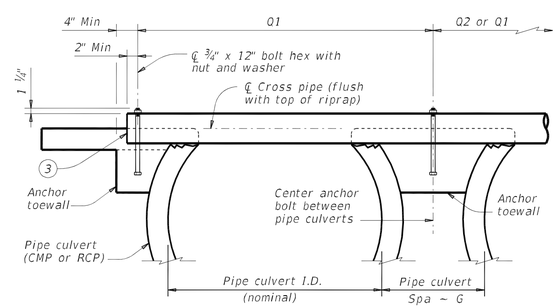

SHOWING CROSS PIPE WITH BOLTED ANCHOR

SECTION A-A

(1) The proper installation of the first cross pipe is critical for vehicle safety. Place the top of the first cross pipe no more than 6" above the flow line.

(2) Provide cross pipes, except the first bottom pipe, of the size shown in the table. Provide a 3 1#2" standard pipe (4" O.D.) for the first bottom pipe.

(3) Install the third cross pipe from the bottom of the culvert using a bolted connection. Ensure that riprap concrete does not flow into the cross pipe so as to permit disassembly of the bolted connection to allow cleanout access. At the Contractor's option, install all other cross pipes using the bolted connection details.

(4) Match cross slope as shown elsewhere in the plans. Cross slope of 6:1 or flatter is required for vehicle safety.

(5) Riprap placed beyond the limits shown will be paid for as concrete riprap in accordance with Item 432, "Riprap."

(6) Quantities shown are for one end of one reinforced concrete pipe (RCP) culvert. For multiple pipe culverts or for corrugated metal pipe (CMP) culverts, quantities will need to be adjusted. Riprap quantities are for contractor's information only.

MATERIAL NOTES:

Synthetic fibers listed on the "Fibers for Concrete" Material Producer List (MPL) may be used in lieu of steel reinforcing in riprap concrete unless noted otherwise.

Provide cross pipes that meet the requirements of ASTM A53 (Type E or S, Gr B), ASTM A500 (Gr B), or API 5LX52.

Provide ASTM A307 bolts and nuts.

Galvanize all steel components, except concrete reinforcing, after fabrication. Repair galvanizing damaged during transport or construction in accordance with the specifications.

GENERAL NOTES:

Cross pipes are designed for a traversing load of 10,000 pounds at yield as recommended by Research Report 280-2F, "Safety Treatment of Roadside Parallel-Drainage Structures", Texas Transportation Institute, March 1981.

Safety end treatments (SET) shown herein are intended for use in those installations where out of control vehicles are likely to traverse the openings approximately perpendicular to the cross pipes.

Construct concrete riprap and all necessary inverts in accordance with the requirements of Item 432, "Riprap."

Payment for riprap and toewall is included in the Price Bid for each Safety End Treatment.

Texas Department of Transportation — Bridge Division Standard

SAFETY END TREATMENT
FOR 12" DIA TO 72" DIA PIPE CULVERTS TYPE II ~ PARALLEL DRAINAGE
SETP-PD

FILE: CD-SETP-PD-20.dgn	DN: GAF	CK: CAT	DW: JRP	CK: GAF
©TxDOT February 2020	CONT	SECT	JOB	HIGHWAY
REVISIONS	DIST		COUNTY	SHEET NO.

STATE OF TEXAS — GERALD S. FURRIER — 129811 — LICENSED PROFESSIONAL ENGINEER — 12/11/2023

REV. NO.	DATE	DRWN	CHKD	REMARKS

DESIGNED BY: A. KAJALE
DRAWN BY: S. DHANGAR
SHEET CHK'D BY: M. MAHADEVAN
CROSS CHK'D BY: A. KAJALE
APPROVED BY: G. FURRIER
DATE: DECEMBER 2023

CDM Smith
8310-1 N Capital of Texas Hwy, Suite 250
Austin, TX 78731
Tel: (512) 346-1100
TBPELS Firm Registration No. F-3043

CITY OF GEORGETOWN, TEXAS

CEDAR BREAKS AND D B WOOD LIFT STATIONS

CIVIL STANDARD DETAILS VIII

PROJECT NO. 2048-272644
FILE NAME: C008STDT

SHEET NO.
CD-8

XREFs: [REVW; G-FURRIER; South lake to South fork_Border] Images: []
Last saved by: MAHADEVANM, Time: 12/13/2023 6:48:33 PM
C:\pw_pt\MAHADEVANM\0398821\C008STDT.dwg
© 2023 CDM SMITH ALL RIGHTS RESERVED.
REUSE OF DOCUMENTS: THESE DOCUMENTS AND DESIGNS PROVIDED BY PROFESSIONAL SERVICE, INCORPORATED HEREIN, ARE THE PROPERTY OF CDM SMITH AND ARE NOT TO BE USED, IN WHOLE OR PART, FOR ANY OTHER PROJECT WITHOUT THE WRITTEN AUTHORIZATION OF CDM SMITH.
Plotted: 12/13/2023 2:48:38 PM

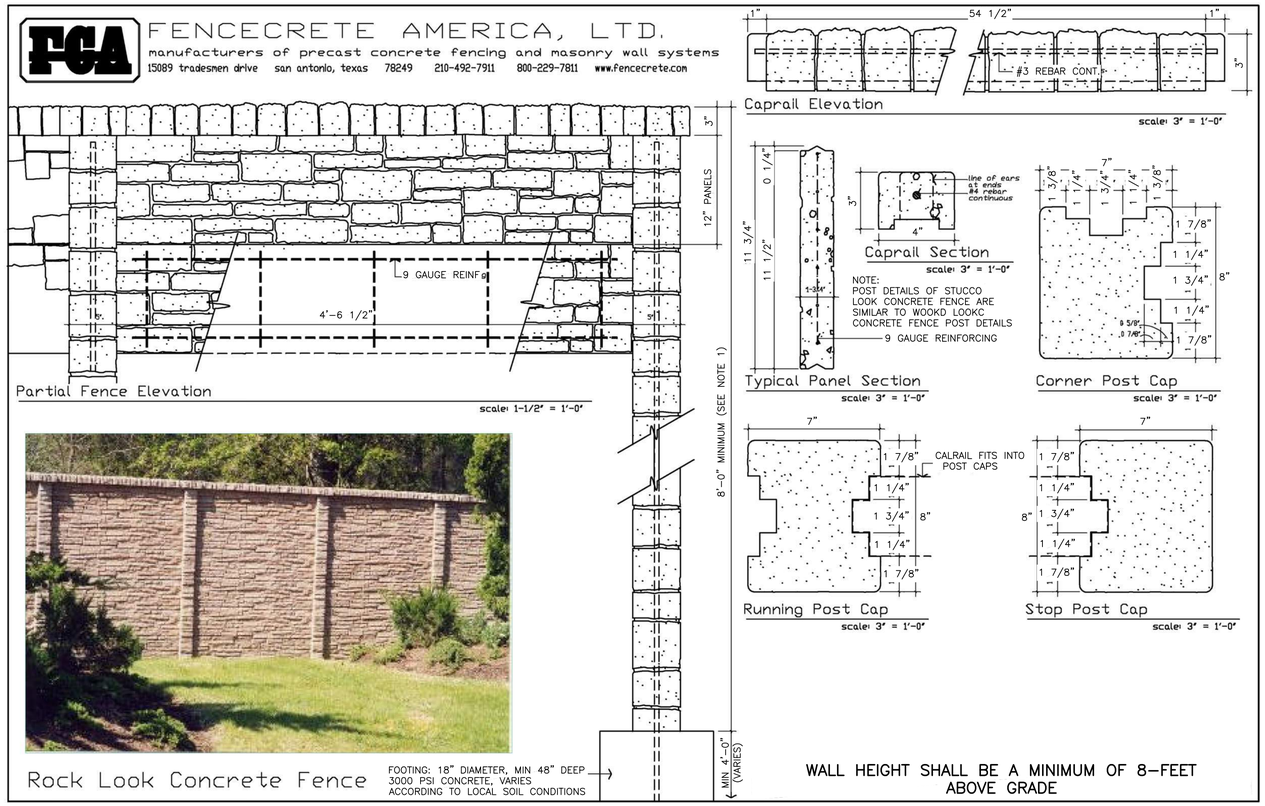

DETAIL A
NTS

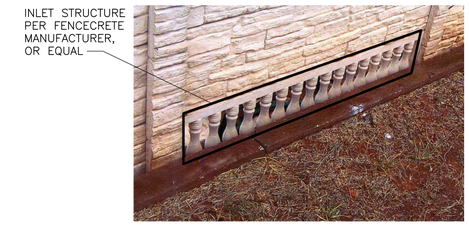

FENCECRETE DRAINAGE INLET

DETAIL B
NTS

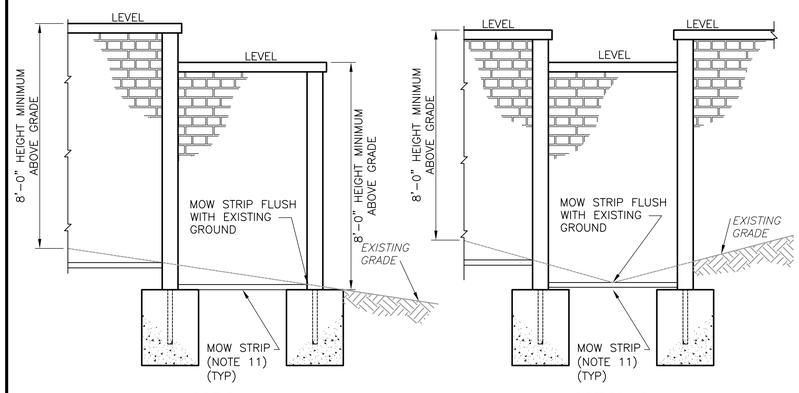

FENCECRETE WALL

DETAIL C
3/8 = 1'-0"

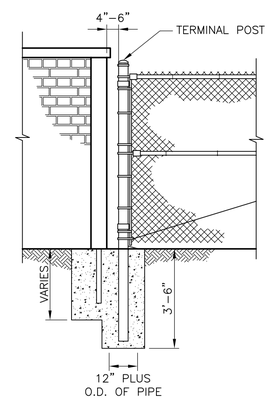

FENCECRETE FENCE JUNCTION WITH CHAIN LINK FENCE

DETAIL D
3/8 = 1'-0"

NOTE:

CONTRACTOR SHALL PROVIDE DRAINAGE PANEL(S) ADEQUATE FOR EXISTING DRAINAGE.

FENCE NOTES:

1. THE COLUMN HEIGHT SHALL BE A MINIMUM OF 8'-0" TO A MAXIMUM OF 14'-0" – WITH 8'-0" ABOVE GRADE.
2. ALL CONCRETE SHALL BE 3000 PSI.
3. ALL REINFORCEMENT SHALL BE ASTM 615 GRADE 60. SPECIAL REINFORCEMENT IS AVAILABLE UPON SPECIAL ORDER.
4. FOOTING – MINIMUM 4-FT UP TO 6-FT DEEP FOOTING STANDARD PER COLUMN. DEPTH AND DIAMETER CAN VARY PER LOCAL SOIL CONDITIONS. FENCING CONTRACTOR SHALL SUBMIT SEALED DESIGN CALCULATIONS BY TEXAS PE.
5. TEXTURE: ALL EXPOSED SIDES HAVE ROCK-LIKE TEXTURE.
6. GATES: SHALL HAVE ADDITIONAL STEEL SUPPORTS ADJACENT TO CONCRETE COLUMNS.
7. ALL STEEL REINFORCEMENT IS PREWELDED WITH STEEL SPACERS SO AS TO ALLOW FOR MAXIMUM CONCRETE COVERAGE.
8. A SPECIAL SILICONE SEALANT IS USED TO LOCK THE CAPRAIL AND POST CAPS IN PLACE. THIS SEALANT REQUIRES SPECIAL TOOLS FOR REMOVAL.
9. PROVIDE OPENINGS FOR DRAINAGE AS DIRECTED BY THE MANUFACTURER.
10. OWNER SHALL SELECT COLOR.
11. CONTRACTOR SHALL PROVIDE 18"W X 4" THICK CONCRETE MOW STRIP W/6" X 6" W1.4 X W1.4 WIRE FABRIC CENTERED IN CONCRETE.
12. CONTRACTOR IS RESPONSIBLE FOR DESIGNING AND FOR INSTALLING THE FENCE SYSTEM SUCH THAT THE GAP UNDER THE BOTTOM SIDE OF PANEL, ESPECIAL ON STEEPER SLOPING AREAS, COMPLIES WITH SITE SECURITY REQUIREMENTS.

NOTE:
THESE ARE STANDARD CIVIL DETAILS. ALL DETAILS ON CZ DRAWINGS MAY NOT APPLY TO THIS PROJECT. IT IS THE CONTRACTOR'S RESPONSIBILITY TO DETERMINE WHICH DETAILS ARE NEEDED BASED UPON INFORMATION SHOWN ON THE DRAWINGS.

STATE OF TEXAS
GERALD S. FURRIER
129811
LICENSED PROFESSIONAL ENGINEER
12/11/2023

REV. NO.	DATE	DRWN	CHKD	REMARKS

DESIGNED BY: A. KAJALE
DRAWN BY: S. DHANGAR
SHEET CHK'D BY: M. MAHADEVAN
CROSS CHK'D BY: A. KAJALE
APPROVED BY: G. FURRIER
DATE: DECEMBER 2023

CDM Smith
8310-1 N Capital of Texas Hwy, Suite 250
Austin, TX 78731
Tel: (512) 346-1100
TBPELS Firm Registration No. F-3043

CITY OF GEORGETOWN, TEXAS

CEDAR BREAKS AND D B WOOD LIFT STATIONS

CIVIL STANDARD DETAILS IX

PROJECT NO. 2048-272644
FILE NAME: C009STDT

SHEET NO.
CD-9

XREFs: [South lake to South fork_Border] Images: [FENCECRETE INLET_XC-PY-DTFNC]
Last saved by: MAHADEVANM Time: 12/13/2023 6:48:44 PM
C:\pw_pt\MAHADEVANM\d3908821\C009STDT.dwg
© 2023 CDM SMITH ALL RIGHTS RESERVED.
REUSE OF DOCUMENTS: THESE DOCUMENTS AND DESIGNS PROVIDED BY PROFESSIONAL SERVICE, INCORPORATED HEREIN, ARE THE PROPERTY OF CDM SMITH AND ARE NOT TO BE USED, IN WHOLE OR PART, FOR ANY OTHER PROJECT WITHOUT THE WRITTEN AUTHORIZATION OF CDM SMITH.

Plotted: 12/13/2023 2:49:21 PM

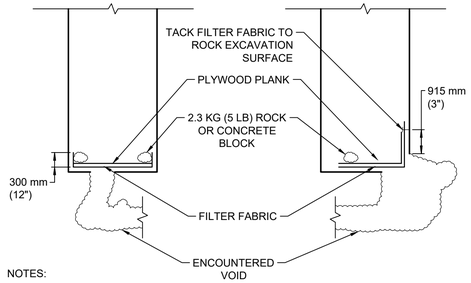

NOTES:

1. PLACE TEMPORARY PROTECTION WITHIN TRENCH TO COVER VOID AS INDICATED. FABRIC SHALL EXTEND A MINIMUM OF 915 mm (3') BEYOND EDGE OF VOID. PLACE A PLYWOOD PLANK (MINIMUM 0.75" (19 mm) THICK) OVER FABRIC. PLANK AND FABRIC SHALL BE WEIGHTED AS REQUIRED BY ROCK 2.3 KG (5 LB) OR CONCRETE BLOCK TO SECURE FILTER FABRIC.
2. TEMPORARY PROTECTION SHALL BE IN PLACE AT ALL TIMES THAT CONSTRUCTION OPERATIONS ARE NOT IN ACTUAL PROGRESS.
3. CONSTRUCTION OPERATIONS WITHIN 7.6 m (25') SHALL NOT PROGRESS DURING OCCURRENCE OF RAIN TO ALLOW FOR PROTECTION OF VOID DURING A RAIN EVENT.
4. LOCALIZED EROSION MEASURES (SILT FENCE OR TRIANGULAR FILTER DIKES) SHALL BE INSTALLED ALONG THE TRENCH TO ENSURE THAT LOOSE SPOILS OR RUNOFF DO NOT ENTER THE TRENCH OR AFFECT PERFORMANCE OF TEMPORARY PROTECTION.
5. SPECIAL CARE SHALL BE TAKE TO ENSURE THAT EROSION CONTROL MEASURES REQUIRED ALONG THE TRENCH ARE MAINTAINED, CLEANED AND FULLY FUNCTIONAL.
6. PROCEDURES AND MATERIAL REQUIREMENTS OUTLINED IN STANDARD SPEC. 025731 SHALL BE FOLLOWED.
7. FILTER FABRIC AND ROCK OR CONCRETE BLOCKS AND PLYWOOD PLANK SHALL BE REMOVED FROM THE TRENCH WHEN PERMANENT VOID MITIGATION MEASURES ARE INSTALLED.

CLASS I – TEMPORARY PROTECTION OF VOID AT BOTTOM OF TRENCH

DETAIL A
NTS –

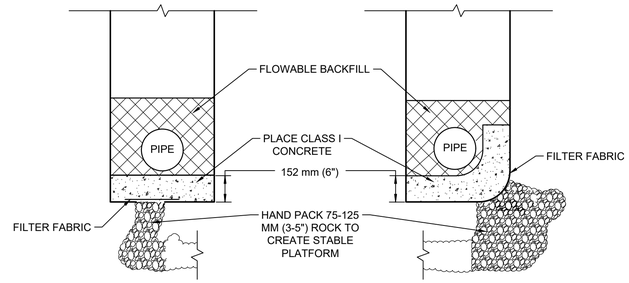

NOTES:

1. PROCEDURES AND MATERIAL REQUIREMENTS OUTLINED IN STANDARD SPEC. 025731 SHALL BE FOLLOWED.
2. VOID OPENING MAY REQUIRE REINFORCEMENT OR SUPPORT IF LARGER THAN 915 mm (3") IN WIDTH OR LENGTH. INSTALL AT DIRECTION OF THE ENGINEER OR DESIGNATED REPRESENTATIVE.
3. CLASS I CONCRETE SHALL CONFORM TO STANDARD SPEC. C-2. PLACE A FORM TO ENSURE MINIMUM THICKNESS OF 457 mm (18") EXTENDING A MINIMUM OF 150 mm (6") BEYOND THE EDGE OF THE VOID.

CLASS II – PERMANENT VOID MITIGATION MEASURES

DETAIL B
NTS –

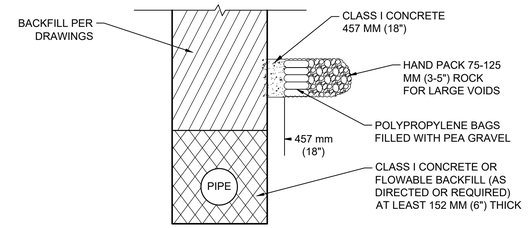

MITIGATION MEASURE A

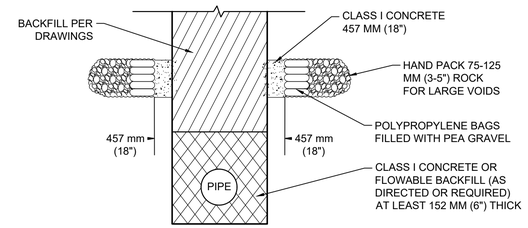

MITIGATION MEASURE B

CLASS III – VOID MITIGATION MEASURES

DETAIL C
NTS –

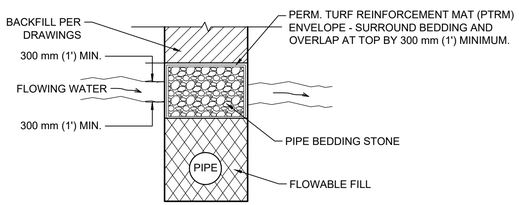

TRANSVERSE PROFILE

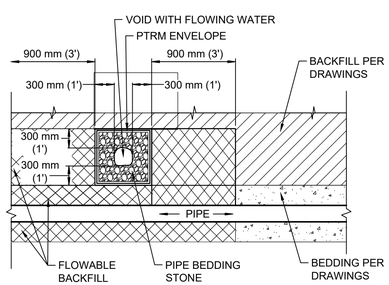

LONGITUDINAL PROFILE

CLASS V – WATER FLOW MITIGATION MEASURES GROUNDWATER ABOVE BEDDING MATERIAL DEPTH

DETAIL D
NTS –

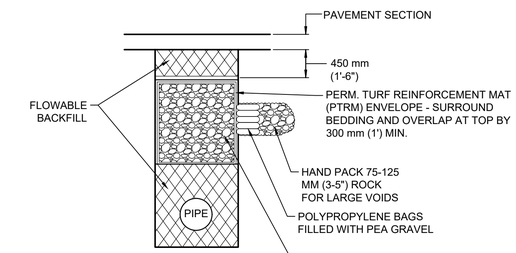

A – VOID MITIGATION TRANSVERSE PROFILE

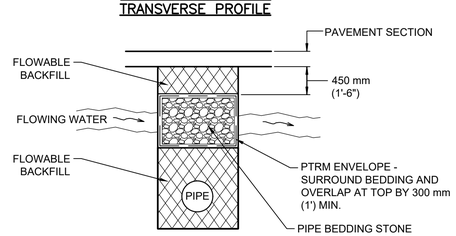

B – FLOWING WATER MITIGATION TRANSVERSE PROFILE

NOTE: PROCEDURES AND MATERIAL REQUIREMENTS OUTLINED IN STANDARD SPEC. 025731 TO BE FOLLOWED.

MODIFIED CLASS V – COMBINATION VOID AND POTENTIAL WATER FLOW MITIGATION MEASURES

DETAIL E
NTS –

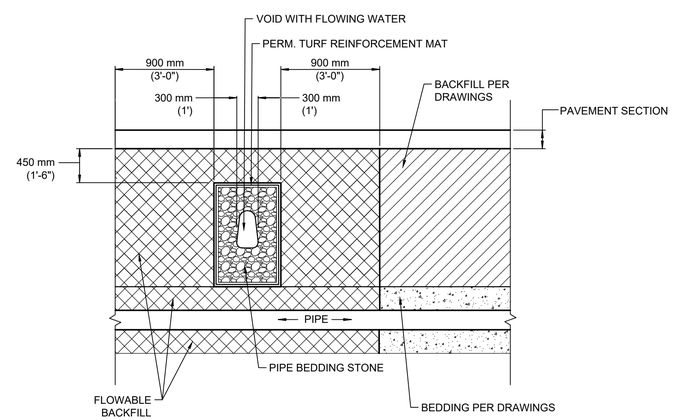

C – FLOWING WATER MITIGATION LONGITUDINAL PROFILE

NOTE: PROCEDURES AND MATERIAL REQUIREMENTS OUTLINED IN STANDARD SPEC. 025731 TO BE FOLLOWED.

MODIFIED CLASS V – COMBINATION VOID AND POTENTIAL WATER FLOW MITIGATION MEASURES

DETAIL F
NTS –

STATE OF TEXAS
GERALD S. FURRIER
129811
LICENSED
PROFESSIONAL ENGINEER
12/11/2023

REV. NO.	DATE	DRWN	CHKD	REMARKS
A	8/3/22	DWS	ALH	CONFORMED DRAWINGS

DESIGNED BY: A. KAJALE
DRAWN BY: S. DHANGAR
SHEET CHK'D BY: M. MAHADEVAN
CROSS CHK'D BY: A. RHAMES
APPROVED BY: A. HINDS
DATE: DECEMBER 2023

CDM Smith
8310-1 N Capital of Texas Hwy, Suite 250
Austin, TX 78731
Tel: (512) 346-1100
TBPELS Firm Registration No. F-3043

CITY OF GEORGETOWN, TEXAS

CEDAR BREAKS AND D B WOOD LIFT STATIONS

VOID MITIGATION DETAILS

PROJECT NO. 2048-272644
FILE NAME: C01OSTDT.DWG
SHEET NO.
CD-10

XREFs: [CDMS_2234] Images: []
Last saved by: RHAMESAD Time: 1/6/2019 12:53:46 PM
C:\Admex\Thomeso\d029798\C2OSSTDT.dwg
©2023 CDM SMITH ALL RIGHTS RESERVED
REUSE OF DOCUMENTS: THESE DOCUMENTS AND DESIGNS PROVIDED BY PROFESSIONAL SERVICE, INCORPORATED HEREIN, ARE THE PROPERTY OF CDM SMITH AND ARE NOT TO BE USED, IN WHOLE OR PART, FOR ANY OTHER PROJECT WITHOUT THE WRITTEN AUTHORIZATION OF CDM SMITH.

Plotted: 12/13/2023 2:49:53 PM

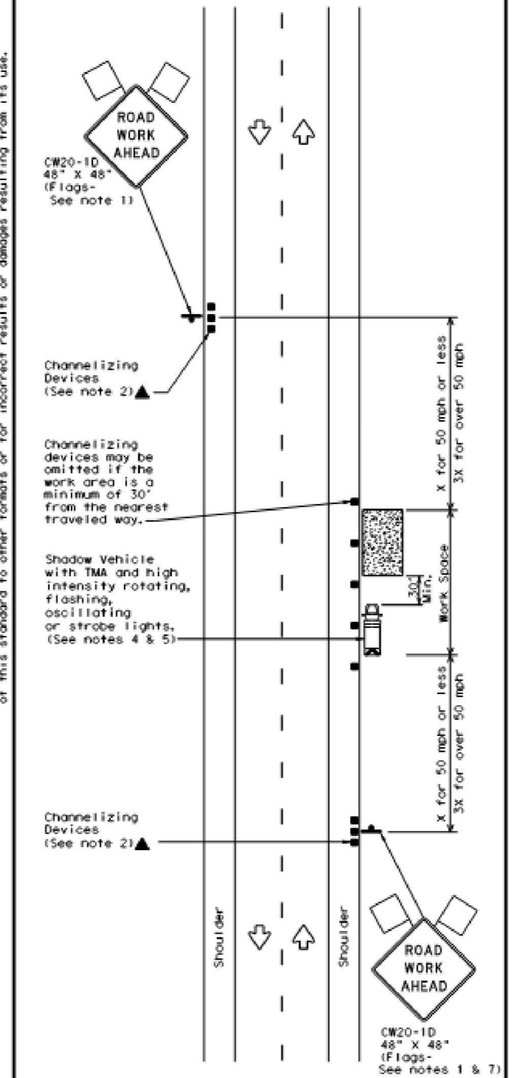

TCP (1-1a)

WORK SPACE NEAR SHOULDER

Conventional Roads

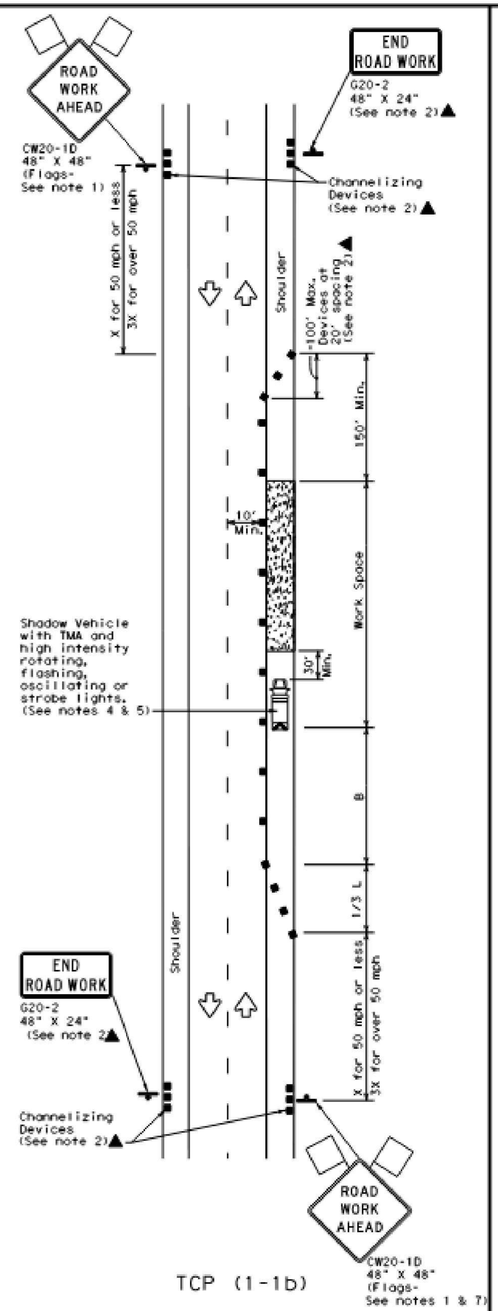

TCP (1-1b)

WORK SPACE ON SHOULDER

Conventional Roads

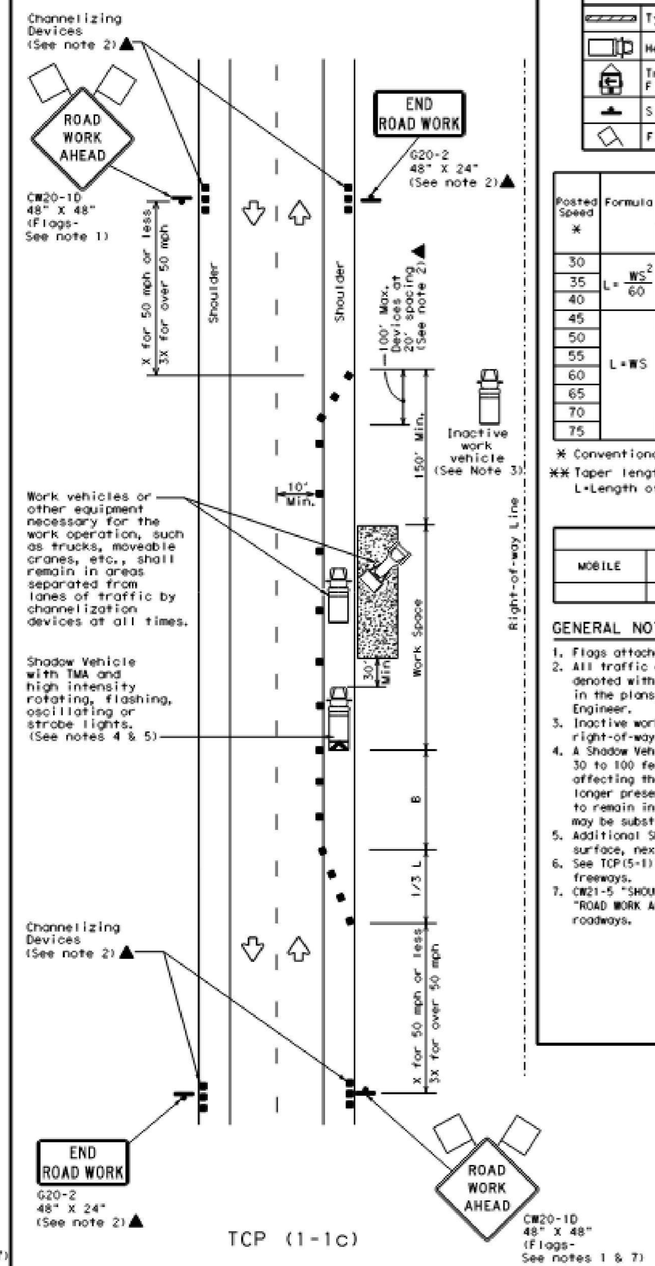

TCP (1-1c)

WORK VEHICLES ON SHOULDER

Conventional Roads

LEGEND			
	Type 3 Barricade		Channelizing Devices
	Heavy Work Vehicle		Truck Mounted Attenuator (TMA)
	Trailer Mounted Flashing Arrow Board		Portable Changeable Message Sign (PCMS)
	Sign		Traffic Flow
	Flag		Flagger

Posted Speed *	Formula	Minimum Desirable Taper Lengths ** 10' Offset	11' Offset	12' Offset	Suggested Maximum Spacing of Channelizing Devices On a Taper	On a Tangent	Minimum Sign Spacing "X" Distance	Suggested Longitudinal Buffer Space "B"
30	$L = \frac{WS^2}{60}$	150'	165'	180'	30'	60'	120'	90'
35		205'	225'	245'	35'	70'	160'	120'
40		265'	295'	320'	40'	80'	240'	155'
45	L=WS	450'	495'	540'	45'	90'	320'	195'
50		500'	550'	600'	50'	100'	400'	240'
55		550'	605'	660'	55'	110'	500'	295'
60		600'	660'	720'	60'	120'	600'	350'
65		650'	715'	780'	65'	130'	700'	410'
70		700'	770'	840'	70'	140'	800'	475'
75		750'	825'	900'	75'	150'	900'	540'

* Conventional Roads Only

** Taper lengths have been rounded off.
L=Length of Taper(FT) W=Width of Offset(FT) S=Posted Speed(MPH)

TYPICAL USAGE				
MOBILE	SHORT DURATION	SHORT TERM STATIONARY	INTERMEDIATE TERM STATIONARY	LONG TERM STATIONARY
	✓	✓		

GENERAL NOTES

1. Flags attached to signs where shown are REQUIRED.
2. All traffic control devices illustrated are REQUIRED, except those denoted with the triangle symbol may be omitted when stated elsewhere in the plans, or for routine maintenance work, when approved by the Engineer.
3. Inactive work vehicles or other equipment should be parked near the right-of-way line and not parked on the paved shoulder.
4. A Shadow Vehicle with a TMA should be used anytime it can be positioned 30 to 100 feet in advance of the area of crew exposure without adversely affecting the performance or quality of the work. If workers are no longer present but road or work conditions require the traffic control to remain in place, Type 3 Barricades or other channelizing devices may be substituted for the Shadow Vehicle and TMA.
5. Additional Shadow Vehicles with TMAs may be positioned off the paved surface, next to those shown in order to protect wider work spaces.
6. See TCP(5-1) for shoulder work on divided highways, expressways and freeways.
7. CW21-5 "SHOULDER WORK" signs may be used in place of CW20-1D "ROAD WORK AHEAD" signs for shoulder work on conventional roadways.

Texas Department of Transportation — Traffic Operations Division Standard

TRAFFIC CONTROL PLAN CONVENTIONAL ROAD SHOULDER WORK

TCP(1-1)-18

FILE: tcp1-1-18.dgn	DN:	CK:	DW:	CK:
© TxDOT December 1985	CONT	SECT	JOB	HIGHWAY
REVISIONS 2-94 4-98 / 8-95 2-12 / 1-97 2-18	DIST		COUNTY	SHEET NO.

GERALD S. FURRIER — STATE OF TEXAS — LICENSED PROFESSIONAL ENGINEER 129811 — 12/11/2023

DISCLAIMER:
The use of this standard is governed by the "Texas Engineering Practice Act". No warranty of any kind is made by TxDOT for any purpose whatsoever. TxDOT assumes no responsibility for the conversion of this standard to other formats or for incorrect results or damages resulting from its use.

DATE:
FILE:

REV. NO.	DATE	DRWN	CHKD	REMARKS
A	8/3/22	DWS	ALH	CONFORMED DRAWINGS

DESIGNED BY: A. KAJALE
DRAWN BY: S. DHANGAR
SHEET CHK'D BY: M. MAHADEVAN
CROSS CHK'D BY: A. RHAMES
APPROVED BY: A. HINDS
DATE: DECEMBER 2023

CDM Smith
8310-1 N Capital of Texas Hwy, Suite 250
Austin, TX 78731
Tel: (512) 346-1100
TBPELS Firm Registration No. F-3043

CITY OF GEORGETOWN, TEXAS

CEDAR BREAKS AND D B WOOD LIFT STATIONS

TRAFFIC CONTROL DETAIL I

PROJECT NO. 2048-272644
FILE NAME: C011 STDT.DWG
SHEET NO.
CD-11

PROPERTY OF CDM SMITH AND ARE NOT TO BE USED, IN WHOLE OR PART, FOR ANY OTHER PROJECT WITHOUT THE WRITTEN AUTHORIZATION OF CDM SMITH.
XREFs: [CDMS_2234] Images: []
Last saved by: RHAMESAD Time: 1/6/2019 12:53:46 PM
C:\cdmext\rhamesad\a0297581\C20SSTDT.dwg
©2023 CDM SMITH ALL RIGHTS RESERVED.
REUSE OF DOCUMENTS: THESE DOCUMENTS AND DESIGNS PROVIDED BY PROFESSIONAL SERVICE, INCORPORATED HEREIN, ARE THE PROPERTY OF CDM SMITH.
Plotted: 12/13/2023 7:04:58 PM

DISCLAIMER:
The use of this standard is governed by the "Texas Engineering Practice Act". No warranty of any kind is made by TxDOT for any purpose whatsoever. TxDOT assumes no responsibility for the conversion of this standard to other formats or for incorrect results or damages resulting from its use.

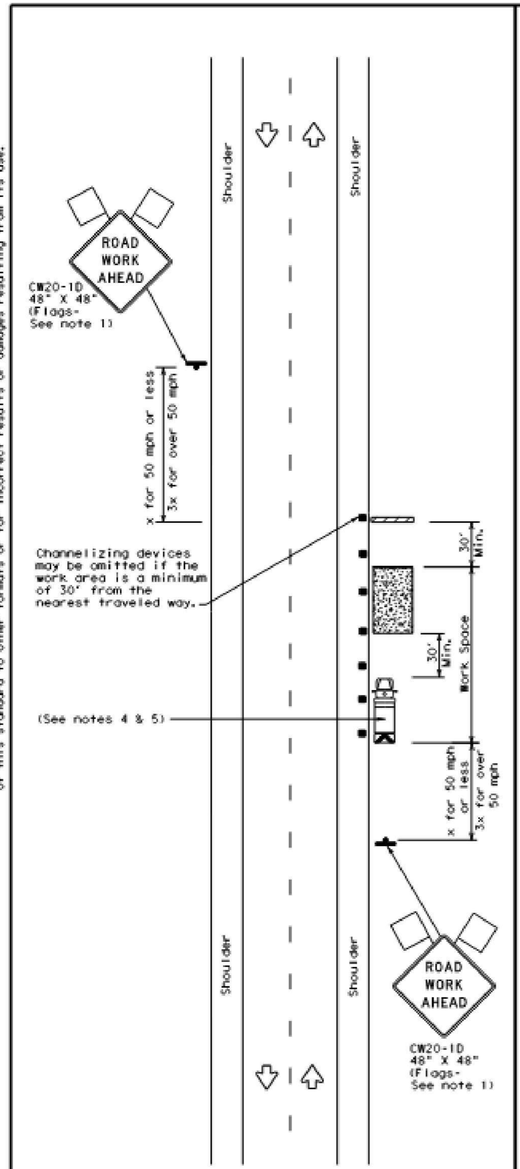

TCP (2-1a)

WORK SPACE NEAR SHOULDER

Conventional Roads

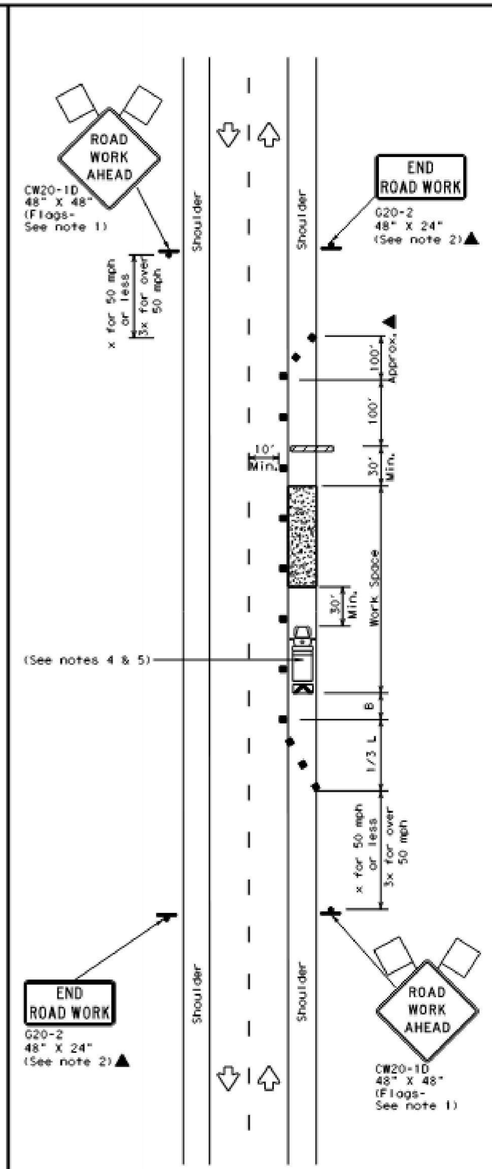

TCP (2-1b)

WORK SPACE ON SHOULDER

Conventional Roads

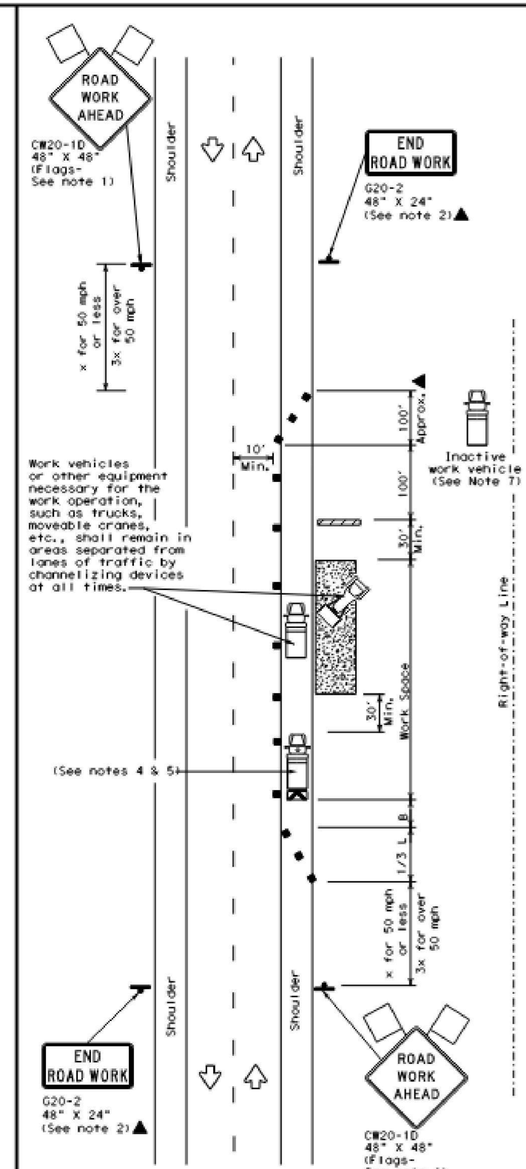

TCP (2-1c)

WORK VEHICLES ON SHOULDER

Conventional Roads

LEGEND			
	Type 3 Barricade		Channelizing Devices
	Heavy Work Vehicle		Truck Mounted Attenuator (TMA)
	Trailer Mounted Flashing Arrow Board		Portable Changeable Message Sign (PCMS)
	Sign		Traffic Flow
	Flag		Flagger

Posted Speed *	Formula	Minimum Desirable Taper Lengths **			Suggested Maximum Spacing of Channelizing Devices		Minimum Sign Spacing "X" Distance	Suggested Longitudinal Buffer Space "B"
		10' Offset	11' Offset	12' Offset	On a Taper	On a Tangent		
30	$L = \frac{WS^2}{60}$	150'	165'	180'	30'	60'	120'	90'
35		205'	225'	245'	35'	70'	160'	120'
40		265'	295'	320'	40'	80'	240'	155'
45	L = WS	450'	495'	540'	45'	90'	320'	195'
50		500'	550'	600'	50'	100'	400'	240'
55		550'	605'	660'	55'	110'	500'	295'
60		600'	660'	720'	60'	120'	600'	350'
65		650'	715'	780'	65'	130'	700'	410'
70		700'	770'	840'	70'	140'	800'	475'
75		750'	825'	900'	75'	150'	900'	540'

* Conventional Roads Only

** Taper lengths have been rounded off.
L=Length of Taper(FT) W=Width of Offset(FT) S=Posted Speed(MPH)

TYPICAL USAGE				
MOBILE	SHORT DURATION	SHORT TERM STATIONARY	INTERMEDIATE TERM STATIONARY	LONG TERM STATIONARY
	✓	✓	✓	✓

GENERAL NOTES

1. Flags attached to signs where shown, are REQUIRED.
2. All traffic control devices illustrated are REQUIRED, except those denoted with the triangle symbol may be omitted when stated in the plans, or for routine maintenance work, when approved by the Engineer.
3. Stockpiled material should be placed a minimum of 30 feet from nearest traveled way.
4. Shadow Vehicle with TMA and high intensity rotating, flashing, oscillating or strobe lights. A Shadow Vehicle with a TMA should be used anytime it can be positioned 30 to 100 feet in advance of the area of crew exposure without adversely affecting the performance or quality of the work. If workers are no longer present but road or work conditions require the traffic control to remain in place, Type 3 Barricades or other channelizing devices may be substituted for the Shadow Vehicle and TMA.
5. Additional Shadow Vehicles with TMAs may be positioned off the paved surface, next to those shown in order to protect a wider work space.
6. See TCP(5-1) for shoulder work on divided highways, expressways and freeways.
7. Inactive work vehicles or other equipment should be parked near the right-of-way line and not parked on the paved shoulder.
8. CW21-5 "SHOULDER WORK" signs may be used in place of CW21-1D "ROAD WORK AHEAD" signs for shoulder work on conventional roadways.

Texas Department of Transportation — Traffic Operations Division Standard

TRAFFIC CONTROL PLAN CONVENTIONAL ROAD SHOULDER WORK

TCP(2-1)-18

FILE: tcp2-1-18.dgn	DN:	CK:	DW:	CK:
©TxDOT December 1985	CONT	SECT	JOB	HIGHWAY
REVISIONS 2-94 4-98 8-95 2-12 1-97 2-18	DIST		COUNTY	SHEET NO.

161

GERALD S. FURRIER — STATE OF TEXAS — LICENSED PROFESSIONAL ENGINEER 129811 — 12/11/2023

REV. NO.	DATE	DRWN	CHKD	REMARKS
A	8/3/22	DWS	ALH	CONFORMED DRAWINGS

DESIGNED BY: A. KAJALE
DRAWN BY: S. DHANGAR
SHEET CHK'D BY: M. MAHADEVAN
CROSS CHK'D BY: A. RHAMES
APPROVED BY: A. HINDS
DATE: DECEMBER 2023

CDM Smith
8310-1 N Capital of Texas Hwy, Suite 250
Austin, TX 78731
Tel: (512) 346-1100
TBPELS Firm Registration No. F-3043

CITY OF GEORGETOWN, TEXAS

CEDAR BREAKS AND D B WOOD LIFT STATIONS

TRAFFIC CONTROL DETAIL II

PROJECT NO. 2048-272644
FILE NAME: C012 STDT.DWG
SHEET NO.
CD-12

PROPERTY OF CDM SMITH AND ARE NOT TO BE USED, IN WHOLE OR PART, FOR ANY OTHER PROJECT WITHOUT THE WRITTEN AUTHORIZATION OF CDM SMITH.
REUSE OF DOCUMENTS: THESE DOCUMENTS AND DESIGNS PROVIDED BY PROFESSIONAL SERVICE, INCORPORATED HEREIN, ARE THE PROPERTY OF CDM SMITH.
©2023 CDM SMITH. ALL RIGHTS RESERVED.

XREFs: [CDMS_2234] Images: []
Last saved by: RHAMESAD Time: 1/6/2019 12:53:46 PM
C:\cdmext\rhamesad\d0297581\C20SSTDT.dwg
Plotted: 12/13/2023 7:04:11 PM

GENERAL NOTES

DESIGN CRITERIA:

CODES:

- INTERNATIONAL BUILDING CODE 2021
- ENVIRONMENTAL STRUCTURES: ACI 350–06 "CODE REQUIREMENTS FOR ENVIRONMENTAL ENGINEERING CONCRETE STRUCTURES"
- OTHER STRUCTURES: ACI 318–19 "BUILDING CODE REQUIREMENTS FOR STRUCTURAL CONCRETE"
- AISC MANUAL OF STEEL CONSTRUCTION, FIFTEENTH EDITION
- ALUMINUM DESIGN MANUAL 2020

DESIGN LOADS:

LIVE LOADS:

– STAIRWAYS AND ACCESS PLATFORMS	100 PSF
– ELEVATED SLABS	200 PSF
– PROCESS SLABS ON GRADE	200 PSF

SNOW LOAD:

– GROUND SNOW LOAD, PG	5 PSF

WIND LOADS:

– BASIC DESIGN WIND SPEED, V (3–SECOND GUST)	115 MPH
– ALLOWABLE STRESS DESIGN WIND SPEED, V_{asd}	90 MPH
– RISK CATEGORY	III
– EXPOSURE CATEGORY	C
– INTERNAL PRESSURE COEFFICIENT (E–HOUSE)	±0.55
– COMPONENT AND CLADDING PRESSURES	SEE DESIGN DRAWINGS

EARTHQUAKE:

– SEISMIC DESIGN CATEGORY	A
– SEISMIC IMPORTANCE FACTOR, I	1.25
– MAPPED SPECTRAL RESPONSE ACC, SS	0.055
– MAPPED SPECTRAL RESPONSE ACC, S1	0.035
– SPECTRAL RESPONSE COEFFICIENT, SDS	0.033
– SPECTRAL RESPONSE COEFFICIENT, SD1	0.019
– SITE CLASS	B
– BASIC SEISMIC FORCE–RESISTING SYSTEM	SEE DESIGN DRAWINGS
– DESIGN BASE SHEAR	SEE DESIGN DRAWINGS
– SEISMIC RESPONSE COEFFICIENT, CS	SEE DESIGN DRAWINGS
– RESPONSE MODIFICATION FACTOR, R	SEE DESIGN DRAWINGS
– ANALYSIS PROCEDURE USED	SEE DESIGN DRAWINGS

CONCRETE 28–DAY STRENGTH:

– CONCRETE FILL, ENCASEMENTS, AND BOLLARDS	2500 PSI
– CIVIL SITE CONCRETE (SEE 'C' DRAWINGS)	3000 PSI
– BEAMS, SLABS, WALLS, FOUNDATIONS	4500 PSI

FOUNDATIONS:

- ALLOWABLE BEARING PRESSURE FOR MAT FOUNDATIONS ON SELECT/STRUCTURAL FILL AND GEOMODEL LAYER 2 LIMESTONE SHALL HAVE 3500 PSF AND 6000 PSF RESPECTIVELY AND GRADE SLABS ON SELECT/STRUCTURAL FILL SHALL HAVE 2500 PSF

GENERAL CONDITIONS:

ALL STRUCTURAL DRAWINGS SHALL BE USED IN CONJUNCTION WITH THE MECHANICAL, CIVIL, ELECTRICAL AND SHOP DRAWINGS AND SPECIFICATIONS.

THE CONTRACTOR SHALL REVIEW AND VERIFY DIMENSIONS SHOWN IN ALL PLANS AND REVIEW ALL FIELD CONDITIONS THAT MAY AFFECT THE INSTALLATION OF THE FACILITY. SHOULD DISCREPANCIES APPEAR, THE CONTRACTOR SHALL NOTIFY THE ENGINEER IN WRITING TO OBTAIN ENGINEER'S CLARIFICATION BEFORE COMMENCING WITH THE WORK.

FOR ALL ITEMS EMBEDDED IN OR PASSED THROUGH CONCRETE, THE CONTRACTOR SHALL INITIALLY REFER TO MECHANICAL DRAWINGS FOR TYPE, SIZE, LOCATION AND SPECIAL INSTALLATION REQUIREMENTS FOR THESE ITEMS.

THE CONTRACTOR SHALL TAKE ANY AND ALL NECESSARY MEASURES TO PROTECT EXISTING STRUCTURES FROM DAMAGE WHEN WORKING IN AND AROUND EXISTING STRUCTURES PERFORMING WORK SUCH AS DEMOLITION, FOUNDATION EXCAVATION AND OTHERS.

SIZE AND LOCATION OF EQUIPMENT PADS AND ANCHOR BOLTS SHALL BE PER EQUIPMENT MANUFACTURER'S REQUIREMENTS.

ANY EQUIPMENT THAT MAY INDUCE VIBRATION TO THE STRUCTURE SHALL BE ADEQUATELY ISOLATED FROM THE STRUCTURES.

ALL DETAILS AND SECTIONS SHOWN ON THE DRAWINGS ARE INTENDED TO BE TYPICAL AND SHALL BE CONSTRUED TO APPLY TO ANY SIMILAR SITUATION ELSE–WHERE ON THE PROJECT, EXCEPT WHERE A DIFFERENT DETAIL IS SHOWN.

STANDARD DETAILS APPLY TO ALL SIMILAR SITUATIONS ON THE PROJECT, EXCEPT WHERE A DIFFERENT DETAIL IS SHOWN.

UNLESS OTHERWISE NOTED, ALL PIPES UNDER SOIL SUPPORTED STRUCTURAL SLABS AND FOOTINGS SHALL BE ENCASED IN REINFORCED CONCRETE AS SHOWN ON THE STRUCTURAL DRAWINGS. PIPES SHALL BE PRESSURE TESTED BEFORE ENCASING. NOT ALL PIPING SHOWN ON STRUCTURAL DRAWINGS. REFER TO CIVIL AND PROCESS MECHANICAL DRAWINGS FOR PIPING SIZE AND LOCATIONS.

CONCRETE:

ALL MATERIALS AND METHODS OF CONSTRUCTION SHALL BE IN ACCORDANCE WITH ACI 318 AND ACI 350 REQUIREMENTS.

ALL CONCRETE SHALL BE AIR–ENTRAINED IN ACCORDANCE WITH ASTM C260.

WATER REDUCING AGENT SHALL BE IN ACCORDANCE WITH ASTM C494.

ALL CONCRETE SURFACES EXPOSED TO AIR, UNLESS OTHERWISE NOTED IN SPECIFICATIONS, SHALL BE TREATED WITH AN APPROPRIATE CURING COMPOUND AS SOON AS CEMENT FINISHING IS COMPLETED OR FORMS ARE REMOVED.

ALL EXPOSED CORNERS OF CONCRETE SHALL HAVE A MINIMUM CHAMFER OF ¾" UNLESS OTHERWISE NOTED.

THE CONTRACTOR SHALL OBTAIN ENGINEER'S APPROVAL FOR THE LOCATION OF CONSTRUCTION JOINTS THAT ARE NOT SHOWN ON THE DRAWING.

REINFORCING STEEL:

REINFORCEMENT SHALL CONFORM TO ASTM A615, GRADE 60 REQUIREMENTS. WELDED WIRE FABRIC SHALL CONFORM TO ASTM A185.

ALL ACCESSORIES SHALL BE IN CONFORMANCE WITH ACI 315 REQUIREMENTS. REINFORCING STEEL SHALL HAVE THE FOLLOWING CLEAR COVER UNLESS OTHER–WISE NOTED:

– CONCRETE CAST AGAINST EARTH	3"
– FORMED SURFACES IN CONTACT WITH SOIL, SEWAGE, WATER OR EXPOSED TO WEATHER	2"

LAP SPLICES SHALL BE AS SHOWN ON THE DRAWINGS. FOR LAP SPLICES NOT SHOWN ON THE DRAWINGS, THE CONTRACTOR SHALL OBTAIN ENGINEER'S APPROVAL.

THE CONTRACTOR SHALL PREPARE PLACING DRAWINGS AND SCHEDULES IN CONFORMANCE WITH ACI 315 REQUIREMENTS.

FLOATATION CONSIDERATION:

STRUCTURES WERE DESIGNED TO BE NON–BUOYANT AFTER THE STRUCTURE IS PLACED INTO SERVICE. THEREFORE, THE STRUCTURE MAY BE BUOYANT DURING CONSTRUCTION. THE GENERAL CONTRACTOR SHALL PROTECT ALL STRUCTURES (NEW AND EXISTING) FROM FLOATATION DURING CONSTRUCTION, REGARDLESS OF GROUNDWATER LEVELS, UNTIL STRUCTURES ARE PLACED IN OPERATION.

MISCELLANEOUS STEEL:

DESIGN, FABRICATION, ERECTION MATERIALS AND WORKMANSHIP SHALL BE IN ACCORDANCE WITH THE LATEST AISC SPECIFICATIONS AND DESIGN DRAWINGS.

ALL MISCELLANEOUS STEEL:

W SHAPES AND CHANNELS	ASTM A992
M, S AND HP SHAPES	ASTM A36
ANGLES	ASTM A36
HSS (SQUARE, RECTANGULAR AND ROUND)	ASTM A500
PLATES	ASTM A36
HIGH–STRENGTH BOLTS	ASTM F3125
NUTS	ASTM F3125
HARDENED STEEL WASHER	ASTM F3125
ANCHOR RODS	ASTM F1554
THREADED ROD	ASTM A36

ALL PIPE: ASTM A53, GRADE B.

THE FABRICATOR SHALL DESIGN AND DETAIL ALL PARTS OF CONNECTIONS NOT FULLY DETAILED ON THE DESIGN DRAWINGS. THE NUMBER OF BOLTS AND OTHER SIMILAR ELEMENTS SHOWN ON THE DRAWING ARE PICTORIAL ONLY.

SHOP AND ERECTION DRAWINGS SHALL BE SUBMITTED TO THE ENGINEER FOR REVIEW.

WELDED CONNECTIONS SHALL BE IN ACCORDANCE WITH THE LATEST AWS STRUCTURAL WELDING CODE REQUIREMENTS. ELECTRODES SHALL BE E–70XX.

MISCELLANEOUS ALUMINUM:

DESIGN, FABRICATION, ERECTION MATERIALS AND WORKMANSHIP SHALL BE IN ACCORDANCE WITH THE LATEST "ALUMINUM DESIGN MANUAL" (ADM) SPECIFICATIONS AND DESIGN DRAWINGS.

ALL MISCELLANEOUS ALUMINUM:

ALUMINUM EXTRUDED PIPE –	ASTM B429, ALLOY 6063–T6 OR 6061–T6
ALUMINUM EXTRUDED SHAPE –	ASTM B221, ALLOY 6063–T6
ALUMINUM SHEET AND PLATE –	ASTM B209, ALLOY 6061–T6
ALUMINUM ALLOY ROLLED THREAD PLATE –	ASTM B209, ALLOY 6061–T6
ALUMINUM CASTING –	ASTM B26/B26M, ALLOY A350.6–T6

SHOP AND ERECTION DRAWINGS SHALL BE SUBMITTED TO THE ENGINEER FOR REVIEW.

WELDED CONNECTIONS SHALL BE IN ACCORDANCE WITH THE LATEST ANS D1.2/D1.2M "STRUCTURAL WELDING CODE – ALUMINUM".

WHERE ALUMINUM CONTACTS A DISSIMILAR METAL, APPLY TO THE DISSIMILAR METAL A HEAVY BRUSH COAT OF ZINC–CHROMATE PRIMER FOLLOWED BY TWO COATS OF ALUMINUM METAL PAINT.

WHERE ALUMINUM CONTACTS MASONRY OR CONCRETE, APPLY A HEAVY COAT OF BITUMASTIC OR EPOXY PAINT.

FOUNDATION NOTES:

1. THE EXISTING SUBSURFACE MATERIALS GENERALLY CONSIST OF THE FOLLOWING LAYERS:
   A. GEOMODEL LAYER 1: SURFICIAL CLAYS, SANDS, AND GRAVELS.
   B. GEOMODEL LAYER 2: EDWARDS GROUP LIMESTONE.
2. REFER TO DESIGN DRAWINGS FOR VERTICAL AND HORIZONTAL LIMITS OF COMPACTED SELECT STRUCTURAL FILL BENEATH SLAB ON GRADE FOUNDATIONS.
3. CONSTRUCTION AREAS SHALL BE STRIPPED OF ALL VEGETATION INCLUDING ROOTS, LOOSE/SOFT TOPSOIL, AND OTHER UNSUITABLE SURFACE MATERIALS, FAT CLAYS. FOLLOWING STRIPPING AND PRIOR TO PLACEMENT OF ADDITIONAL FILL, THE EXPOSED SOIL SUBGRADE AREAS SHALL BE PROOFROLLED AS PER TXDOT ITEM 216 WITH AN ADEQUATELY LOADED VEHICLE SUCH AS A FULLY–LOADED TANDEM–AXLE DUMP TRUCK TO DETECT WEAK AREAS. WEAK AREAS DETECTED DURING PROOFROLLING SHALL BE REMOVED AND REPLACED WITH SELECT FILL. PROOFROLLING IS NOT NECESSARY IN INTACT GEOMODEL LAYER 2 LIMESTONE SUBGRADE AREAS. PROPER SITE DRAINAGE SHALL BE MAINTAINED DURING CONSTRUCTION SO THAT PONDING OF SURFACE RUNOFF DOES NOT OCCUR.
4. SUBSEQUENT TO PROOFROLLING, AND JUST PRIOR TO PLACEMENT OF FILL, THE EXPOSED SUBGRADE SHALL BE EVALUATED FOR MOISTURE AND DENSITY. THE SUBGRADE SHALL BE WITHIN 2 PERCENT OF THE OPTIMUM MOISTURE CONTENT, AND HAVE AN IN–PLACE DRY DENSITY OF AT LEAST 98 PERCENT OF THE STANDARD EFFORT (ASTM D 698) MAXIMUM DRY DENSITY OF THE IN–SITU SOILS. IF THE MOISTURE OR DENSITY DOES NOT MEET THE ABOVE CRITERIA, THE SUBGRADE SHALL BE SCARIFIED TO A MINIMUM DEPTH OF 8 INCHES, MOISTURE ADJUSTED TO WITHIN 2 PERCENT OF THE OPTIMUM MOISTURE CONTENT, AND COMPACTED TO AT LEAST 98 PERCENT OF THE STANDARD EFFORT (ASTM D698) MAXIMUM DRY DENSITY.
5. GRADE ADJUSTMENTS WITHIN THE GRADE SLABS OR FOUNDATION AREA SHALL BE ACCOMPLISHED BY INSTALLING AND COMPACTING SELECT FILL COMPOSED OF IMPORTED FILL MATERIAL OR ON–SITE PROCESSED ROCK MATERIAL SPECIFIED IN THE GEOTECHNICAL REPORT THAT MEETS TXDOT ITEM 247 (TYPE A, GRADE 3 OR BETTER) WITH A PLASTICITY INDEX RANGING BETWEEN 5 AND 20 PERCENT AND GRADATION LESS THAN 40% RETAINED ON NO. 4 SIEVE. SELECT FILL SHALL BE PLACED ON PREPARED SURFACES IN LIFTS NOT TO EXCEED 8 INCHES LOOSE MEASURE, WITH COMPACTED THICKNESS NOT TO EXCEED 6 INCHES. THE SELECT FILL SHALL BE COMPACTED TO AT LEAST 98 PERCENT OF THE STANDARD EFFORT (ASTM D 698) MAXIMUM DRY DENSITY WITHIN 3 PERCENT OF THE OPTIMUM MOISTURE CONTENT FOR FILL LAYERS UP TO 6 FEET BELOW FINAL GRADE. INCREASE COMPACTION TO AT LEAST 100 PERCENT OF THE STANDARD EFFORT (ASTM D 698) MAXIMUM DRY DENSITY FOR FILL LAYERS DEEPER THAN 6 FEET BELOW FINAL GRADE.
6. SELECT FILL MATERIAL CAN ALSO CONSIST OF CRUSHED GEOMODEL LAYER 2 LIMESTONE BASE MATERIAL MEETING THE REQUIREMENTS OF THE TEXAS DEPARTMENT OF TRANSPORTATION (TXDOT) 2004 STANDARD SPECIFICATION ITEM 247, TYPE A, GRADE 3. GEOMODEL LAYER 1 SOILS ARE NOT SUITABLE FOR RE–USE AS SELECT/STRUCTURAL FILL.
7. FOR MAT FOUNDATIONS FOR BELOW–GRADE STRUCTURES (LIFT STATION, STRUCTURES, ETC.); EXCAVATIONS SHALL BE PERFORMED WITH EQUIPMENT CAPABLE OF PROVIDING A RELATIVELY CLEAN BEARING AREA. THE BOTTOM 6 INCHES OF THE EXCAVATIONS SHALL BE PERFORMED USING A SMOOTH–TOOTHED EXCAVATION BUCKET OR HAND LABOR. THE EXCAVATIONS SHALL BE NEATLY EXCAVATED AND PROPERLY FORMED WITH DISTURBANCE OF THE BEARING AREA OF THE FOUNDATIONS MINIMIZED DURING THE EXCAVATION OPERATIONS.
   A. EITHER AT OR WITHIN 6 INCHES OF THE BOTTOM OF EXCAVATIONS, THE EXPOSED SOIL SUBGRADE AREA SHALL BE PROOFROLLED AS PER TXDOT ITEM 216 WITH AN ADEQUATELY LOADED VEHICLE SUCH AS A FULLY–LOADED TANDEM–AXLE DUMP TRUCK TO DETECT WEAK AREAS. PROOFROLLING IS NOT NECESSARY IN INTACT LIMESTONE STRATUM SUBGRADE AREAS.
   B. WEAK AREAS OR SOFT ZONES OBSERVED DURING PROOFROLLING SHALL BE OVER–EXCAVATED TO A FIRM AND UNDISTURBED SOIL LAYER WITH ALL LOOSE MATERIALS IN THE EXCAVATION BOTTOM REMOVED AND REPLACED WITH SELECT FILL OR CONCRETE.
   C. CONTRACTOR SHALL INSTALL SEAL SLABS AND PROVIDE NECESSARY DEWATERING TO ENSURE THAT WATER IS REMOVED AND DOES NOT ACCUMULATE AT THE BOTTOM OF THE FOUNDATION EXCAVATIONS.
8. SAMPLES OF PROPOSED SELECT FILL SHALL BE FURNISHED TO THE TESTING LABORATORY 7 DAYS PRIOR TO INSTALLATION TO PERMIT TIME FOR SPECIFICATION COMPLIANCE INSPECTION AND APPROVAL.
9. FOUNDATION DESIGNS ARE BASED ON THE RECOMMENDATIONS PROVIDED IN THE GEOTECHNICAL REPORT.

GEOTECHNICAL REPORT:

GEOTECHNICAL REPORT ENTITLED "CITY OF GEORGETOWN – SOUTH LAKE WTP TO SOUTH FORK INTERCEPTOR WASTEWATER IMPROVEMENTS" PREPARED BY TERRACON CONSULTANTS, INC., DATED NOVEMBER 06, 2023.

DEFERRED SUBMITTALS

THE FOLLOWING PORTIONS OF THE PROJECT ARE DEFERRED SUBMITTAL ITEMS & HAVE NOT BEEN DESIGNED BY THE ENGINEER OF RECORD:

- ANCHORAGE OF EQUIPMENT AND PIPE SUPPORTS (SPECIFICATION DIV 40).
- ELECTRICAL EQUIPMENT AND GENERATOR ENCLOSURES.
- GENERATOR ACCESS PLATFORM, RAILING, AND STAIRS.
- ALUMINUM FLOOR DOORS (SPECIFICATION SECTION 083483).
- SCADA TOWER AND FOUNDATION (SPECIFICATION SECTION 406666).
- ELECTRICAL POWER HOUSE (E–HOUSE) (SPECIFICATION SECTION 266100).

DEFERRED SUBMITTAL ITEMS SHALL NOT BE INSTALLED UNTIL THE ENGINEER OF RECORD HAS REVIEWED THE SUBMITTAL DOCUMENTS AND INDICATED THAT THEY HAVE BEEN REVIEWED AND ARE FOUND TO BE IN CONFORMANCE WITH THE REQUIREMENTS OF THE SPECIFICATIONS.

DEFERRED SUBMITTALS SHALL BE PREPARED AND STAMPED BY A CIVIL OR STRUCTURAL PROFESSIONAL ENGINEER LICENSED IN THE STATE OF TEXAS.

ABBREVIATIONS:

AL	ALUMINUM	MAX	MAXIMUM
ADDT'L	ADDITIONAL	MIN	MINIMUM
BLDG	BUILDING	MISC	MISCELLANEOUS
BOT	BOTTOM	NF	NEAR FACE
CC	CENTER TO CENTER	NTS	NOT TO SCALE
CJ	CONTROL JOINT	OC	ON CENTER
CLR	CLEAR COVER	PCJ	PARTIAL CONTRACTION JOINT
CMU	CONCRETE MASONRY UNIT	PJF	PREFORMED JOINT FILLER
CONC	CONCRETE	PL	PLATE
CONST JT	CONSTRUCTION JOINT	PLF	POUNDS PER LINEAR FOOT
CONT	CONTINUOUS	PROJ	PROJECTION
CONT'D	CONTINUED	PSF	POUNDS PER SQUARE FOOT
DIA	DIAMETER	PSI	POUNDS PER SQUARE INCH
DWG	DRAWING	REINF	REINFORCEMENT
EF	EACH FACE	SPECS	SPECIFICATIONS
EL	ELEVATION	SS	STAINLESS STEEL
EW	EACH WAY	STD	STANDARD
EXP JT	EXPANSION JOINT	T&B	TOP AND BOTTOM
FF	FAR FACE	T/STRUCTURE	TOP OF STRUCTURE
FTG	FOOTING	TYP	TYPICAL
HORIZ	HORIZONTAL	UON	UNLESS OTHERWISE NOTED
HP	HIGH POINT	VERT	VERTICAL
ID	INSIDE DIAMETER	WSTP	WATERSTOP
LP	LOW POINT	WWF	WELDED WIRE FABRIC
MAT'L	MATERIAL	W/	WITH

ABBREVIATION NOTES:

1. ABBREVIATIONS AND DESIGNATIONS FOR STEEL MEMBERS MAY BE FOUND IN THE CURRENT MANUAL OF STEEL CONSTRUCTION BY AISC.
2. ABBREVIATIONS OF TECHNICAL SOCIETIES AND TRADE ASSOCIATIONS MAY BE FOUND IN THE SPECIFICATIONS.
3. WELDING SYMBOLS AND ABBREVIATIONS MAY BE FOUND IN AWS 2.4.

STRUCTURAL LEGEND & SYMBOLS

(E) — INDICATES EQUIPMENT PAD PER DETAIL B ON SHEET SD–2. COORDINATE SIZE W/ EQUIPMENT REQUIREMENTS.

DECK & GRATING SPAN DIRECTION

WATERSTOP (SEE SPECS FOR TYPE AND MATERIALS)

MOMENT CONNECTION

PIPE — PXXX / EL XXX.XX / QTY XX — MARK. SEE A/S–STD–8 / TOP OF SHAFT ELEVATION / QUANTITY OF SHAFTS

EARTH FILL	BRICK
UNDISTURBED SOIL	STEEL
STRUCTURAL FILL	GRATING
SELECT FILL	CHECKERED PLATE
SAND	CONCRETE MASONRY
GROUT	CONCRETE
NATIVE LIME STONE	AL FLOOR DOOR

COLUMN CENTERLINE UNO

GUARDRAIL/RAILING

STATE OF TEXAS — MAHNAZ MOSTAFAZADEH — 147841 — LICENSED PROFESSIONAL ENGINEER

12/11/2023

REV. NO.	DATE	DRWN	CHKD	REMARKS

DESIGNED BY: E. RIVERA
DRAWN BY: J. GILEZAN
SHEET CHK'D BY: W. KIAHON
CROSS CHK'D BY: E. RIVERA
APPROVED BY: M. MOSTAFAZADEH
DATE: DECEMBER 2023

CDM Smith
8310-1 N Capital of Texas Hwy, Suite 250
Austin, TX 78731
Tel: (512) 346-1100
TBPELS Firm Registration No. F-3043

CITY OF GEORGETOWN, TEXAS

CEDAR BREAKS AND D B WOOD LIFT STATIONS

STRUCTURAL
GENERAL NOTES, ABBREVATIONS, AND LEGEND

PROJECT NO. 2048–272644
FILE NAME: S001NFNT.dwg
SHEET NO.
S-1

Plotted: 12/12/2023 10:45:24 AM

© 2023 CDM SMITH ALL RIGHTS RESERVED.
REUSE OF DOCUMENTS: THESE DOCUMENTS AND DESIGNS PROVIDED BY PROFESSIONAL SERVICE, INCORPORATED HEREIN, ARE THE PROPERTY OF CDM SMITH AND ARE NOT TO BE USED, IN WHOLE OR PART, FOR ANY OTHER PROJECT WITHOUT THE WRITTEN AUTHORIZATION OF CDM SMITH.

NOTES:

1. THIS DRAWING IS PROVIDED TO OUTLINE THE MINIMUM LEVEL OF SPECIAL INSPECTIONS DURING CONSTRUCTION TO ENSURE CONFORMANCE TO THE REQUIREMENTS OF THE CONTRACT DOCUMENTS. A STATEMENT OF SPECIAL INSPECTIONS WILL BE PREPARED BY A REGISTERED DESIGN PROFESSIONAL AND SUBMITTED WITH THE BUILDING PERMIT APPLICATION.
2. SPECIAL INSPECTIONS WILL BE CONDUCTED IN ACCORDANCE WITH THE REQUIREMENTS SET FORTH IN CHAPTER 17 OF THE 2021 INTERNATIONAL BUILDING CODE (IBC).
3. IN ACCORDANCE WITH THE REQUIREMENTS OF CHAPTER 17 OF THE INTERNATIONAL BUILDING CODE, THE OWNER WILL PROVIDE AN APPROVED AGENCY OR AGENCIES, INDEPENDENT FROM THE CONTRACTOR AND EMPLOYING QUALIFIED PERSONNEL TO PERFORM SPECIAL INSPECTIONS IDENTIFIED IN THE STATEMENT OF SPECIAL INSPECTIONS. THE APPROVED AGENCY WILL FURNISH INSPECTION REPORTS TO THE REGISTERED DESIGN PROFESSIONAL IN RESPONSIBLE CHARGE AND BUILDING OFFICIAL.
4. SPECIAL INSPECTIONS SHALL NOT RELIEVE THE CONTRACTOR OF RESPONSIBILITY FOR QUALITY CONTROL OF THE WORK OR FOR CONFORMANCE TO THE REQUIREMENTS OF THE CONTRACT DOCUMENTS. DETECTION, OR FAILURE TO DETECT, DEFECTS IN THE WORK SHALL NOT RELIEVE THE CONTRACTOR OF RESPONSIBILITY TO CORRECT ALL DEFECTS IN THE WORK, WHETHER DETECTED OR NOT, AND OF RESPONSIBILITY FOR CONFORMANCE TO THE REQUIREMENTS OF THE CONTRACT DOCUMENTS.
5. REMOVE AND REPLACE, OR REPAIR, DEFECTS IN THE WORK AND WORK NOT IN CONFORMANCE WITH THE REQUIREMENTS OF THE CONTRACT DOCUMENTS AT NO ADDITIONAL COST TO THE OWNER. CONTRACTOR SHALL BEAR THE COSTS FOR THE INSPECTION AND/OR TESTS OF ANY REPLACED OR REPAIRED PORTIONS OF THE WORK.
6. CONTRACTOR SHALL COOPERATE WITH SPECIAL INSPECTIONS BY PROVIDING SUFFICIENT NOTICE FOR THE SCHEDULING OF PERSONNEL AND BY ALLOWING FREE AND SAFE ACCESS TO THE WORK FOR OBSERVATION, VERIFICATION, SAMPLING AND INSPECTION. PROVIDE AND PERMIT THE USE OF LADDERS, SCAFFOLDING, INCIDENTAL EQUIPMENT, AND SAFETY EQUIPMENT AS MAY BE REQUIRED TO CONDUCT SPECIAL INSPECTIONS. ALL SUCH PROVISIONS FOR FREE AND SAFE ACCESS AND EQUIPMENT SHALL BE SAFE, IN GOOD WORKING CONDITION, AND ERECTED, MAINTAINED, AND HANDLED BY QUALIFIED PERSONNEL.
7. SPECIAL INSPECTIONS DO NOT APPLY TO CONTRACTOR'S EQUIPMENT, TEMPORARY STRUCTURES USED FOR CONSTRUCTION, MEANS AND METHODS OF CONSTRUCTION, OR SITE SAFETY. CONTRACTOR SHALL REMAIN RESPONSIBLE FOR ADEQUACY AND SAFETY OF EQUIPMENT, TEMPORARY STRUCTURES USED FOR CONSTRUCTION, MEANS AND METHODS OF CONSTRUCTION AND SITE SAFETY.
8. PROVIDE SPECIAL INSPECTIONS AND TESTS FOR THE FOLLOWING TYPES OF WORK:
   A. STEEL CONSTRUCTION PER IBC SECTION 1705.2.
   B. CONCRETE CONSTRUCTION PER IBC SECTION 1705.3 AND TABLE 1705.3.
   C. SOILS PER IBC SECTION 1705.6.
   D. FABRICATED ITEMS PER IBC SECTION 1705.11.

TABLE 1 – REQUIRED SPECIAL INSPECTIONS AND TESTS OF SOILS (IBC, TABLE 1705.6)

TYPE	IBC REFERENCE	INSPECTION FREQUENCY		REFERENCE STANDARD
		CONTINUOUS	PERIODIC	
VERIFY MATERIALS BELOW SHALLOW FOUNDATIONS ARE ADEQUATE TO ACHIEVE THE DESIGN BEARING CAPACITY.	1705.6		X	CONTRACT DOCUMENTS AND GEOTECHNICAL REPORT
VERIFY EXCAVATIONS ARE EXTENDED TO PROPER DEPTH AND HAVE REACHED PROPER MATERIAL.			X	
PERFORM CLASSIFICATION AND TESTING OF COMPACTED FILL MATERIALS.			X	
DURING FILL PLACEMENT, VERIFY USE OF PROPER MATERIALS AND PROCEDURES IN ACCORDANCE WITH THE PROVISIONS OF THE APPROVED GEOTECHNICAL REPORT. VERIFY DENSITIES AND LIFT THICKNESSES DURING PLACEMENT AND COMPACTION OF COMPACTED FILL.		X		
PRIOR TO PLACEMENT OF COMPACTED FILL, INSPECT SUBGRADE AND VERIFY THAT SITE HAS BEEN PREPARED PROPERLY.			X	

TABLE 2 – REQUIRED SPECIAL INSPECTIONS AND TESTS OF CONCRETE CONSTRUCTION (IBC, TABLE 1705.3)

TYPE	IBC REFERENCE	INSPECTION FREQUENCY		REFERENCE STANDARD
		CONTINUOUS	PERIODIC	
INSPECT REINFORCEMENT, INCLUDING PRESTRESSING TENDONS, AND VERIFY PLACEMENT	1705.3		X	ACI 318: CH 20, 25.2, 25.3, 26.6.1–26.6.3
REINFORCING BAR WELDING:	1705.3			AWS D1.4 ACI 318: 26.6.4
a. VERIFY WELDABILITY OF REINFORCING BARS OTHER THAN ASTM A706			X	
b. INSPECT SINGLE PASS FILLET WELDS MAX 5/16"			X	
c. INSPECT ALL OTHER WELDS		X		
INSPECT ANCHORS CAST IN CONCRETE	1705.3		X	ACI 318: 17.8.2
INSPECT ANCHORS POST–INSTALLED IN HARDENED CONCRETE MEMBERS (NOTE a):	1705.3			
a. ADHESIVE ANCHORS INSTALLED HORIZONTALLY OR UPWARDLY INCLINED ORIENTATIONS TO RESIST SUSTAINED TENSION LOADS		X		ACI 318: 17.8.2.4
b. MECHANICAL ANCHORS AND ADHESIVE ANCHORS NOT DEFINED IN a			X	ACI 318: 17.8.2
VERIFYING USE OF REQUIRED DESIGN MIX	1904.1 1904.2		X	ACI 318: CH 19, 26.4.3, 26.4.4
PRIOR TO CONCRETE PLACEMENT, FABRICATE SPECIMENS FOR STRENGTH TESTS, PERFORM SLUMP AND AIR CONTENT TESTS, AND DETERMINE THE TEMPERATURE OF THE CONCRETE	1705.3	X		ASTM C31 ASTM C172 ACI 318: 26.5, 26.12
INSPECT CONCRETE AND SHORTCRETE PLACEMENT FOR PROPER APPLICATION TECHNIQUES	1705.3	X		ACI 318: 26.5
VERIFY MAINTENANCE OF SPECIFIED CURING TEMPERATURE AND TECHNIQUES	1705.3		X	ACI 318: 26.5.3–26.5.5
INSPECT PRESTRESSED CONCRETE FOR:	1705.3			ACI 318: 26.10
a. APPLICATION OF PRESTRESSING FORCES		X		
b. GROUTING OF BONDED PRESTRESSING TENDONS		X		
INSPECT ERECTION OF PRECAST CONCRETE MEMBERS	1705.3		X	ACI 318: 26.9
FOR PRECAST CONCRETE DIAPHRAGM CONNECTIONS OR REINFORCEMENT AT JOINTS CLASSIFIED AS MODERATE OR HIGH DEFORMABILITY ELEMENTS (MDE OR HDE) IN STRUCTURES ASSIGNED TO SEISMIC DESIGN CATEGORY C, D, E OR F, INSPECT SUCH CONNECTIONS AND REINFORCEMENT IN THE FIELD FOR:	1705.3			ACI 318: 26.13.1.3
a. INSTALLATION OF THE EMBEDDED PARTS		X		ACI 550.5
b. COMPLETION OF THE CONTINUITY OF REINFORCEMENT ACROSS JOINTS.		X		
c. COMPLETION OF CONNECTIONS IN THE FIELD.		X		
INSPECT INSTALLATION TOLERANCES OF PRECAST CONCRETE DIAPHRAGM CONNECTIONS FOR COMPLIANCE WITH ACI 550.5	1705.3		X	ACI 318: 26.13.1.3
VERIFY IN–SITU CONCRETE STRENGTH, PRIOR TO STRESSING OF TENDONS IN POST–TENSIONED CONCRETE AND PRIOR TO REMOVAL OF SHORES AND FORMS FROM BEAMS AND STRUCTURAL SLABS	1705.3		X	ACI 318: 26.11.2
INSPECT FORMWORK FOR SHAPE, LOCATION AND DIMENSIONS OF THE CONCRETE MEMBER BEING FORMED	1705.3		X	ACI 318: 26.11.1.2(b)

NOTES:
a. SPECIFIC REQUIREMENTS FOR SPECIAL INSPECTION SHALL BE INCLUDED IN THE RESEARCH REPORT FOR THE ANCHOR ISSUED BY AN APPROVED SOURCE IN ACCORDANCE WITH 17.8.2 IN ACI 318, OR OTHER QUALIFICATION PROCEDURES. WHERE SPECIFIC REQUIREMENTS ARE NOT PROVIDED, SPECIAL INSPECTION REQUIREMENTS SHALL BE SPECIFIED BY THE REGISTERED DESIGN PROFESSIONAL AND SHALL BE APPROVED BY THE BUILDING OFFICIAL PRIOR TO THE COMMENCEMENT OF THE WORK.

STATE OF TEXAS
MAHNAZ MOSTAFAZADEH
141841
LICENSED
PROFESSIONAL ENGINEER
12/11/2023

REV. NO.	DATE	DRWN	CHKD	REMARKS

DESIGNED BY: E. RIVERA
DRAWN BY: K. RAJENDRAN
SHEET CHK'D BY: W. KIAHON
CROSS CHK'D BY: E. RIVERA
APPROVED BY: M. MOSTAFAZADEH
DATE: DECEMBER 2023

CDM Smith
8310-1 N Capital of Texas Hwy, Suite 250
Austin, TX 78731
Tel: (512) 346-1100
TBPELS Firm Registration No. F-3043

CITY OF GEORGETOWN, TEXAS

CEDAR BREAKS AND D B WOOD LIFT STATIONS

STRUCTURAL SPECIAL INSPECTIONS

PROJECT NO. 2048–272644
FILE NAME: S002NFSI.dwg
SHEET NO.
S-2

© 2023 CDM SMITH ALL RIGHTS RESERVED.
REUSE OF DOCUMENTS: THESE DOCUMENTS AND DESIGNS PROVIDED BY PROFESSIONAL SERVICE, INCORPORATED HEREIN, ARE THE PROPERTY OF CDM SMITH AND ARE NOT TO BE USED, IN WHOLE OR PART, FOR ANY OTHER PROJECT WITHOUT THE WRITTEN AUTHORIZATION OF CDM SMITH.

Plotted: 12/12/2023 10:56:22 AM

DESIGN LOAD DATA – CEDAR BREAKS STATION	
SEISMIC	
BASIC SEISMIC FORCE RESISTING SYSTEM:	CONCRETE CAST–IN–PLACE WALL DESIGNED IN ACCORDANCE WITH ACI 350.3
DESIGN BASE SHEAR:	$\left[(Pi+Pw+Pr)^2+Pc^2+Py^2\right]^{0.5}$
SEISMIC RESPONSE COEFFICIENTS	Ci=0.042 Cc=0.015 Ct=0.020
RESPONSE MODIFICATION FACTOR:	Ri=3.0 Rc=1.0
ANALYSIS PROCEDURE USED:	EQUIVALENT LATERAL FORCE PROCEDURE
REFER TO SHEET S–1 FOR DESIGN LOAD DATA THAT IS THE SAME FOR ALL STRUCTURES.	

NOTES:

1. REFER TO MECHANICAL SHEETS FOR REQUIRED EQUIPMENT PAD AND PIPE SUPPORT DIMENSIONS AND LOCATIONS.
2. REFER TO MECHANICAL SHEETS FOR ALL PIPE PENETRATION LOCATIONS, AND DETAILS.
3. PROVIDE A MINIMUM OF 3" OF SEAL SLAB UNDER THE FOUNDATION SLAB.
4. REFERENCE GEOTECHNICAL INVESTIGATION ENTITLED "CITY OF GEORGETOWN – SLWTP TO SFI WASTEWATER IMPROVEMENTS". TWO ZONES OF MATERIAL HAVE BEEN IDENTIFIED THAT MAY REQUIRE ATTENTION. THE CONTRACTOR SHALL TAKE APPROPRIATE MEASURES WHEN EXCAVATING FOR THIS STRUCTURE.
5. SEE SPECIFICATION SECTION 083483 FLOOR DOORS FOR FLOOR DOOR (ACCESS HATCH) REQUIREMENTS.
6. DIMENSIONS SHALL BE VERIFIED AND COORDINATED BY CONTRACTOR WITH PUMP SUPPLIER. ADJUST DIMENSION OF FLOOR DOOR OPENING AND LOCATION OF BEAMS AS REQUIRED AND SUBMIT UPDATED DIMENSIONS TO ENGINEER FOR REVIEW. COORDINATE TOP SLAB PENETRATIONS WITH PROCESS MECHANICAL, ELECTRICAL, AND INSTRUMENTATION DRAWINGS.
7. * COORDINATE LOCATION OF PENETRATIONS WITH WALLS, BEAMS, AND FLOOR DOOR EMBEDDED FRAMING. DO NOT ENCROACH ON BEAMS AND WALLS AND REMAIN AT LEAST 6" FROM FLOOR DOOR FRAMING. COORDINATE TOP SLAB PENETRATIONS WITH PROCESS MECHANICAL, ELECTRICAL, AND INSTRUMENTATION DRAWINGS.
8. AT WALL OPENINGS CUT HORIZONTAL REINFORCEMENT AND PROVIDE ADDITIONAL REINFORCEMENT AS SHOWN ON STANDARD DETAIL E/SD–1.

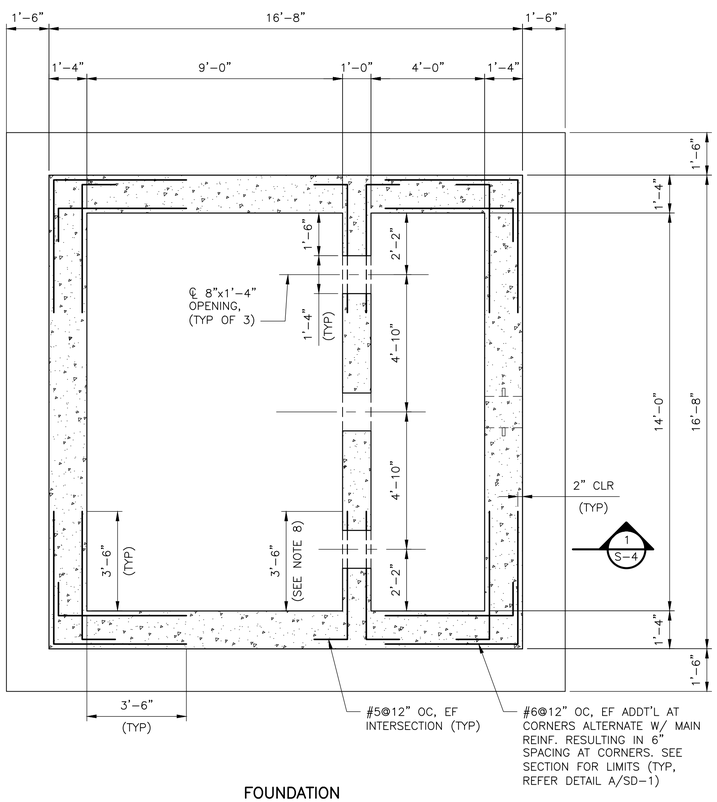

FOUNDATION

PLAN

3/8" = 1'–0"

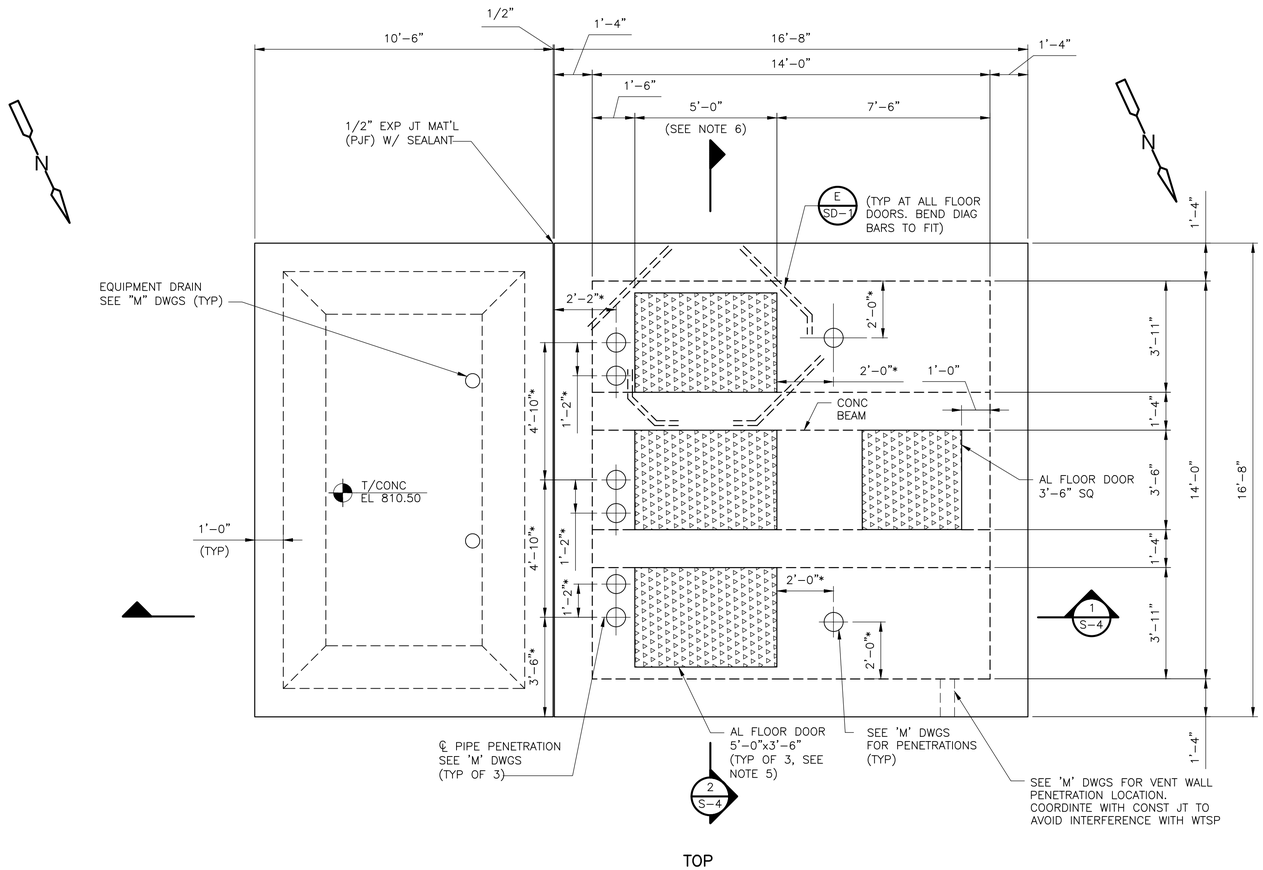

TOP

PLAN

3/8" = 1'–0"

3/8" = 1'– 0"

2 0 2 4

STATE OF TEXAS
MAHNAZ MOSTAFAZADEH
147841
LICENSED
PROFESSIONAL ENGINEER
12/11/2023

REV. NO.	DATE	DRWN	CHKD	REMARKS

DESIGNED BY: J. CLARKE
DRAWN BY: K. RAJENDRAN
SHEET CHK'D BY: W. KIAHON
CROSS CHK'D BY: E. RIVERA
APPROVED BY: M. MOSTAFAZADEH
DATE: DECEMBER 2023

CDM Smith
8310-1 N Capital of Texas Hwy, Suite 250
Austin, TX 78731
Tel: (512) 346-1100
TBPELS Firm Registration No. F-3043

CITY OF GEORGETOWN, TEXAS

CEDAR BREAKS AND D B WOOD LIFT STATIONS

CEDAR BREAKS LIFT STATION
FOUNDATION AND TOP PLANS

PROJECT NO. 2048–272644
FILE NAME: S003LSPL.dwg

SHEET NO.
S-3

Plotted: 12/12/2023 11:00:25 AM

© 2023 CDM SMITH ALL RIGHTS RESERVED.
REUSE OF DOCUMENTS: THESE DOCUMENTS AND DESIGNS PROVIDED BY PROFESSIONAL SERVICE, INCORPORATED HEREIN, ARE THE PROPERTY OF CDM SMITH AND ARE NOT TO BE USED, IN WHOLE OR PART, FOR ANY OTHER PROJECT WITHOUT THE WRITTEN AUTHORIZATION OF CDM SMITH.

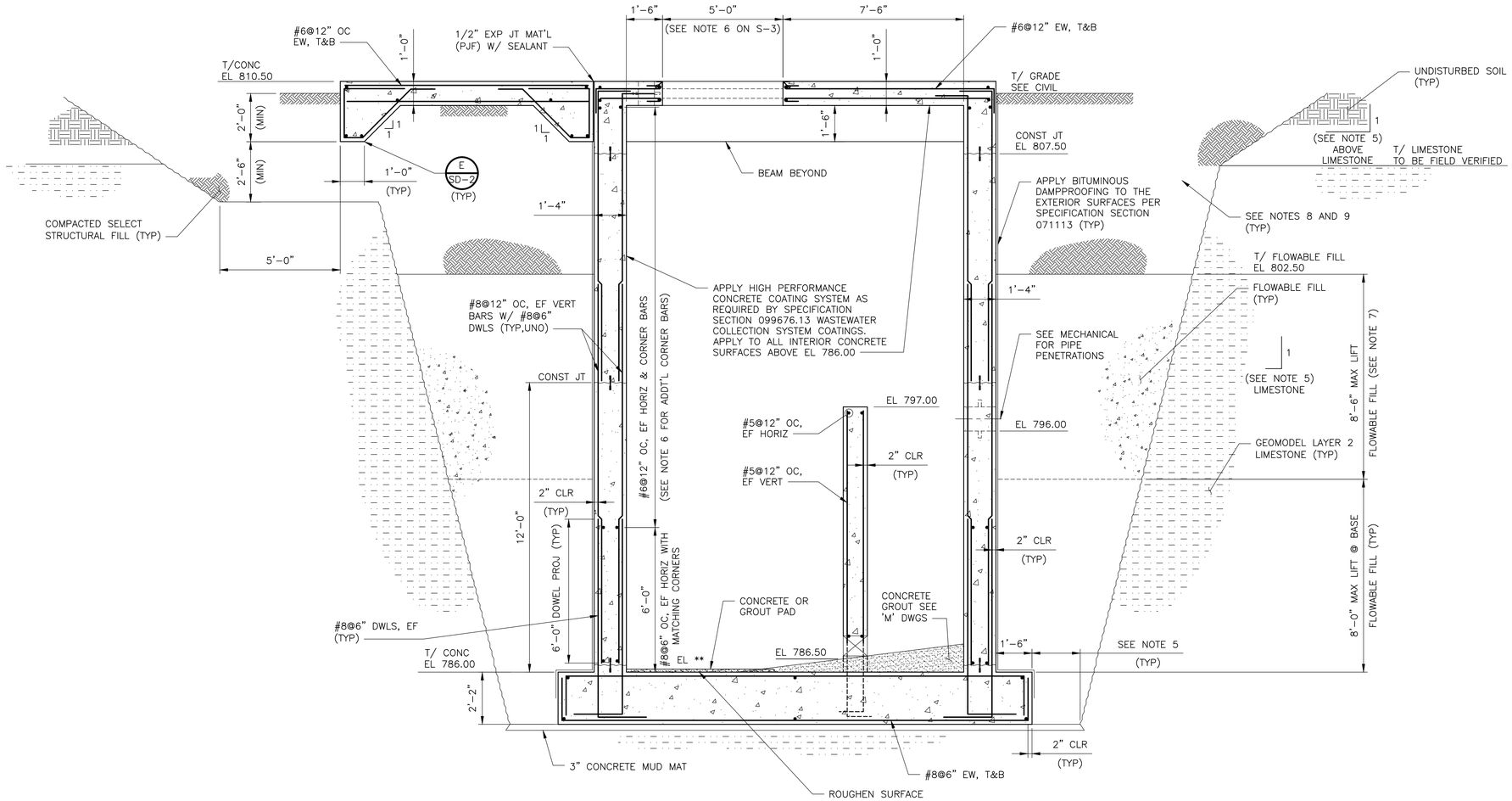

SECTION 1 / S-3
3/8" = 1'-0"

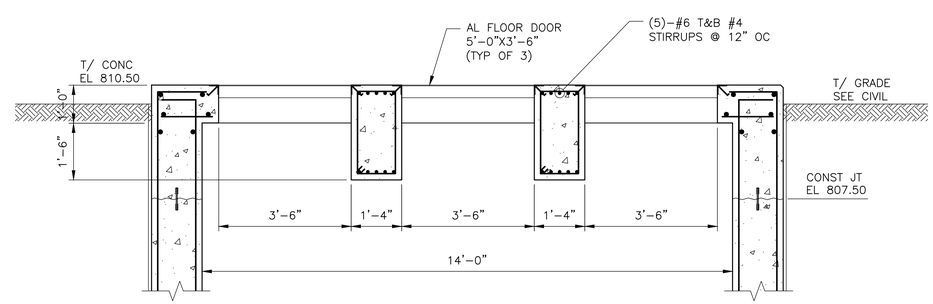

SECTION 2 / S-3
1/2" = 1'-0"

NOTES:

1. REFER TO MECHANICAL SHEETS FOR REQUIRED EQUIPMENT PAD AND PIPE SUPPORT DIMENSIONS AND LOCATIONS.
2. REFER TO MECHANICAL SHEETS FOR ALL PIPE PENETRATION LOCATIONS, AND DETAILS.
3. SEE SHEET S-3 FOR ADDITIONAL NOTES.
4. ** REQUIREMENT VARIES WITH PUMP MANUFACTURER. VERIFY REQUIREMENTS PRIOR TO CONSTRUCTION AND REVISE AS REQUIRED.
5. EXCAVATION METHOD AND LIMITS SHALL BE DETERMINED BY THE CONTRACTOR IN ACCORDANCE WITH OSHA 29 CFR AND SUBMITTED TO THE ENGINEER FOR REVIEW AND APPROVAL PRIOR TO CONSTRUCTION.
6. FOR ADDITIONAL REINFORCING AT CORNERS/INTERSECTION, SEE FOUNDATION PLAN ON SHEET S-3.
7. FLOWABLE FILL LIFTS SHALL NOT BE PLACED UNTIL THE LIFT DIRECTLY BELOW HAS HARDENED TO FULL STRENGTH.
8. SEE FOUNDATION NOTES ON S-1 FOR GENERAL REQUIREMENTS OF SITE PREPARATION, SELECT STRUCTURAL FILL, AND COMPACTION REQUIREMENTS.
9. FILL LAYERS UP TO 6 FEET BELOW FINAL GRADE SHALL BE COMPACTED TO MINIMUM 98 PERCENT OF THE STANDARD EFFORT. INCREASE COMPACTION TO MINIMUM 100 PERCENT OF THE STANDARD EFFORT (ASTM D 698) MAXIMUM DRY DENSITY FOR FILL LAYERS DEEPER THAN 6 FEET BELOW FINAL GRADE.

3/8" = 1'- 0"
1/2" = 1'- 0"

STATE OF TEXAS
MANUAZ MOSTAFAZADEH
147841
LICENSED
PROFESSIONAL ENGINEER
12/11/2023

REV. NO.	DATE	DRWN	CHKD	REMARKS

DESIGNED BY: J. CLARKE
DRAWN BY: K. RAJENDRAN
SHEET CHK'D BY: W. KIAHON
CROSS CHK'D BY: E. RIVERA
APPROVED BY: M. MOSTAFAZADEH
DATE: DECEMBER 2023

CDM Smith
8310-1 N Capital of Texas Hwy, Suite 250
Austin, TX 78731
Tel: (512) 346-1100
TBPELS Firm Registration No. F-3043

CITY OF GEORGETOWN, TEXAS

CEDAR BREAKS AND D B WOOD LIFT STATIONS

CEDAR BREAKS LIFT STATION SECTIONS

PROJECT NO. 2048-272644
FILE NAME: S004LSSC.dwg
SHEET NO. S-4

Plotted: 12/12/2023 11:08:24 AM

© 2023 CDM SMITH ALL RIGHTS RESERVED.
REUSE OF DOCUMENTS: THESE DOCUMENTS AND DESIGNS PROVIDED BY PROFESSIONAL SERVICE, INCORPORATED HEREIN, ARE THE PROPERTY OF CDM SMITH AND ARE NOT TO BE USED, IN WHOLE OR PART, FOR ANY OTHER PROJECT WITHOUT THE WRITTEN AUTHORIZATION OF CDM SMITH.

NOTES:

1. * GENERATOR PAD DESIGN IS CONSIDERED PRELIMINARY UNTIL GENERATOR SHOP DRAWING HAS BEEN SUBMITTED TO AND APPROVED BY THE ENGINEER. FINAL DESIGN, IF DIFFERENT THAN SHOWN HERE, WILL BE APPROVED AFTER FINAL GENERATOR SUBMITTAL IS APPROVED.
2. ***FOR BLOCKOUTS AND OPENINGS, PROVIDE OPENING REINFORCING PER DETAIL E/SD-1. COORDINATE SIZE AND LOCATION WITH MANUFACTURER OF FINAL EQUIPMENT, APPROVED BY THE ENGINEER.
3. MINIMUM PAD DIMENSIONS. INCREASE AS NEEDED TO FIT EQUIPMENT.
4. ** IF LIMESTONE LAYER IS ENCOUNTERED WITHIN COMPACTION ZONE, CONTACT ENGINEER TO COORDINATE REDUCTION IN COMPACTION ZONE DEPTH. NATIVE SOIL SHALL BE COMPLETELY REMOVED AND ONLY COMPACTED SELECT FILL SHALL BE USED BETWEEN BOTTOM OF SLABS ON GRADE AND THE TOP OF THE LIMESTONE ROCK LAYER.
5. REFER TO FOUNDATION NOTES ON S-1 FOR GENERAL REQUIREMENTS OF SITE PREPARATION, SELECT STRUCTURAL FILL, AND COMPACTION REQUIREMENTS.

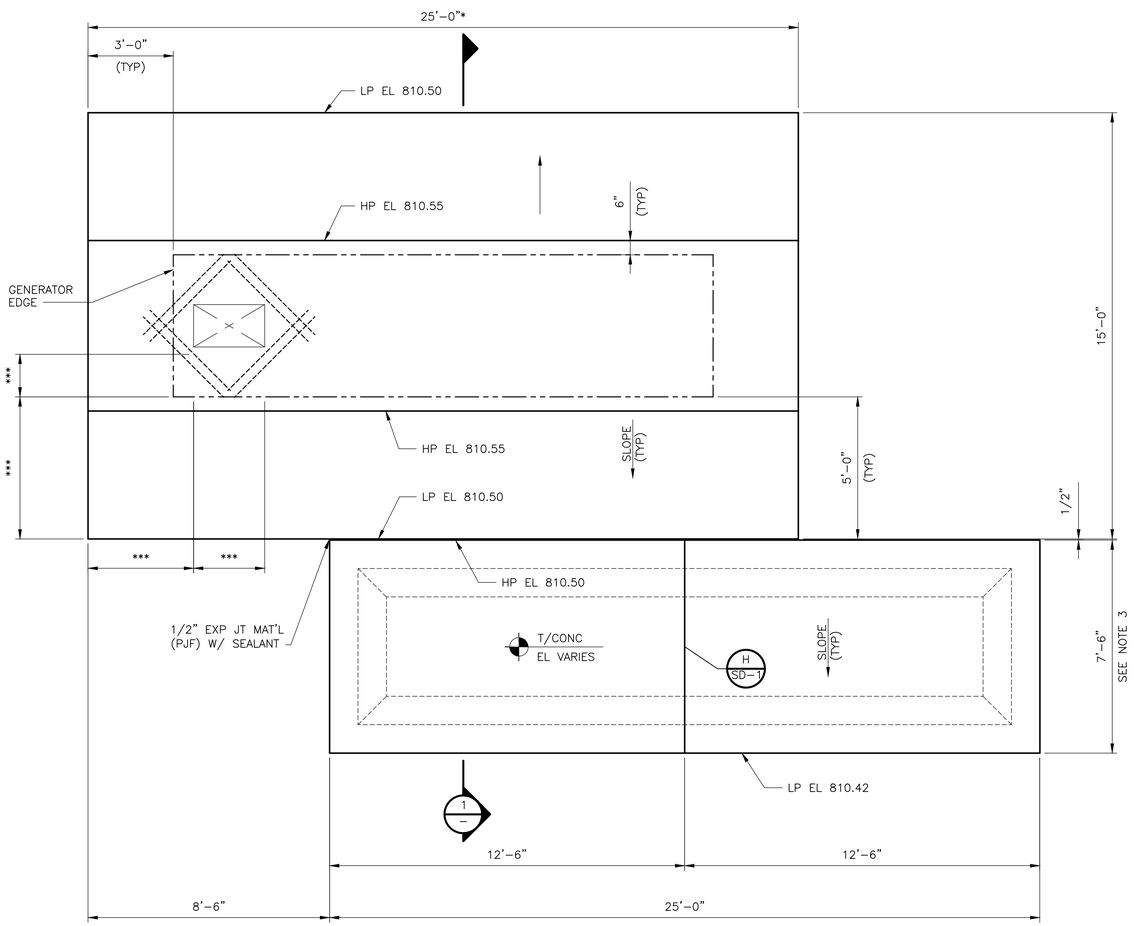

PLAN

3/8" = 1'-0"

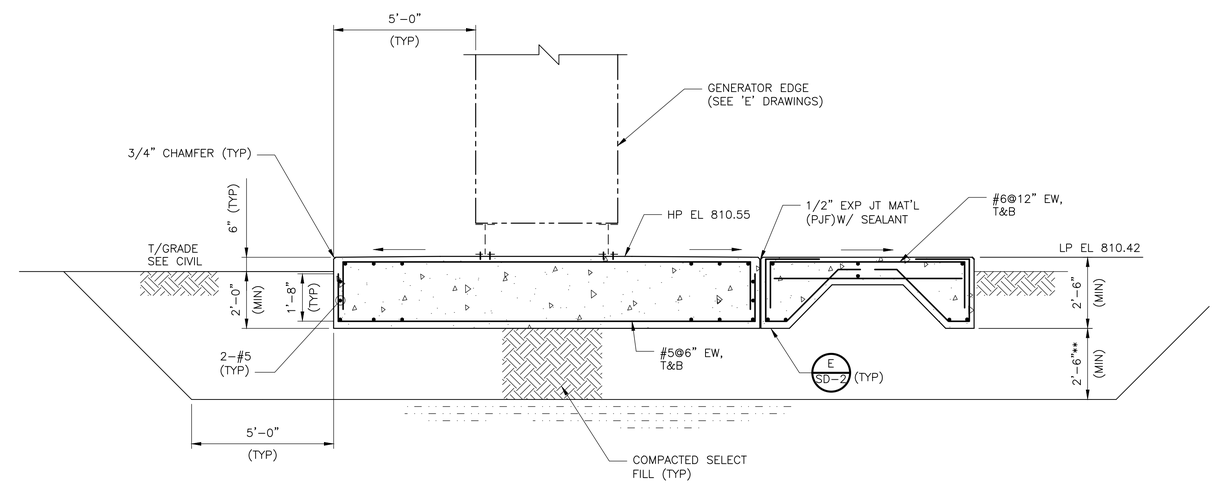

SECTION 1 / -

3/8" = 1'-0"

3/8" = 1'- 0"

2 0 2 4

STATE OF TEXAS
MAHNAZ MOSTAFAZADEH
147841
LICENSED
PROFESSIONAL ENGINEER
12/11/2023

REV. NO.	DATE	DRWN	CHKD	REMARKS

DESIGNED BY: B. ADITYA
DRAWN BY: K. RAJENDRAN
SHEET CHK'D BY: W. KIAHON
CROSS CHK'D BY: E. RIVERA
APPROVED BY: M. MOSTAFAZADEH
DATE: DECEMBER 2023

CDM Smith
8310-1 N Capital of Texas Hwy, Suite 250
Austin, TX 78731
Tel: (512) 346-1100
TBPELS Firm Registration No. F-3043

CITY OF GEORGETOWN, TEXAS

CEDAR BREAKS AND D B WOOD LIFT STATIONS

CEDAR BREAKS GENERATOR PAD
PLAN AND SECTION

PROJECT NO. 2048-272644
FILE NAME: S005CBGN.dwg
SHEET NO.
S-5

Plotted: 12/13/2023 2:57:30 PM

© 2023 CDM SMITH ALL RIGHTS RESERVED.
REUSE OF DOCUMENTS: THESE DOCUMENTS AND DESIGNS PROVIDED BY PROFESSIONAL SERVICE, INCORPORATED HEREIN, ARE THE PROPERTY OF CDM SMITH AND ARE NOT TO BE USED, IN WHOLE OR PART, FOR ANY OTHER PROJECT WITHOUT THE WRITTEN AUTHORIZATION OF CDM SMITH.

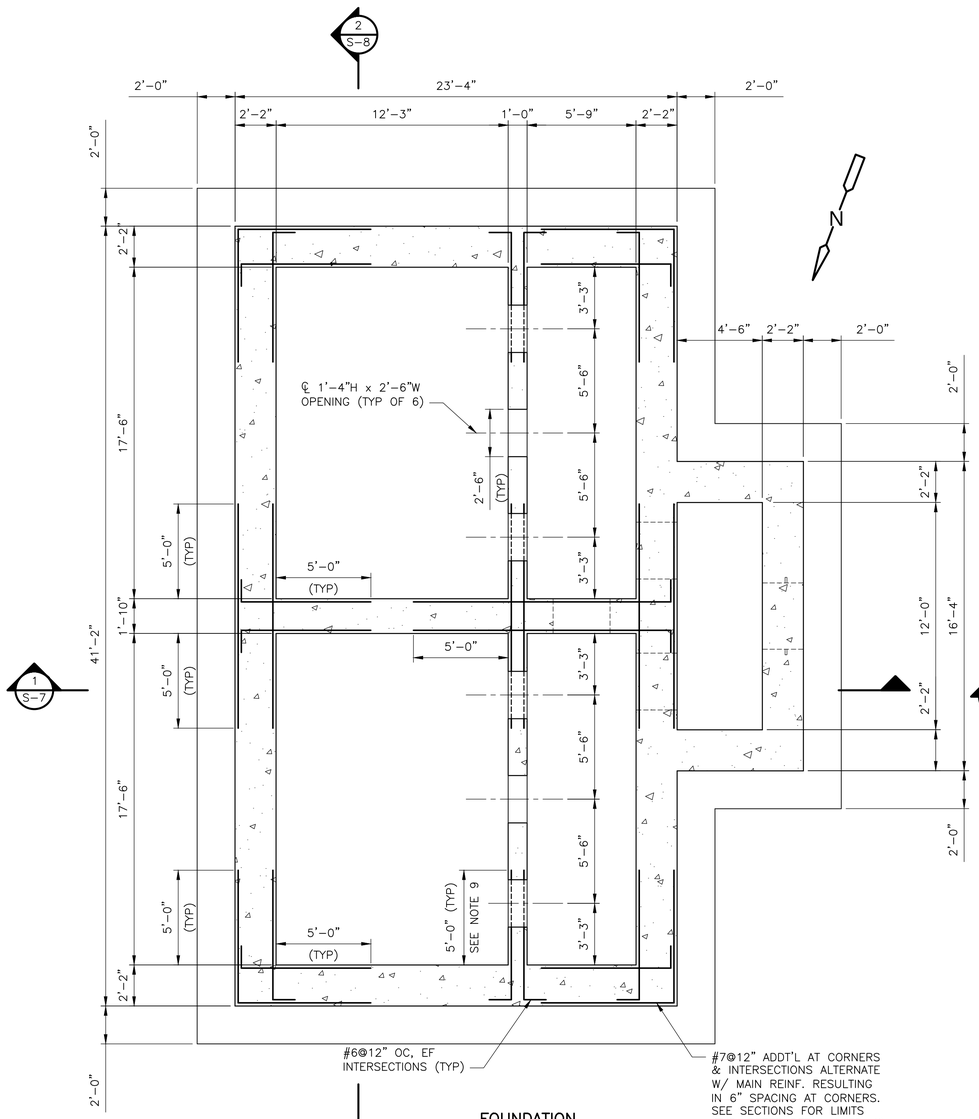

FOUNDATION

PLAN

1/4" = 1'-0"

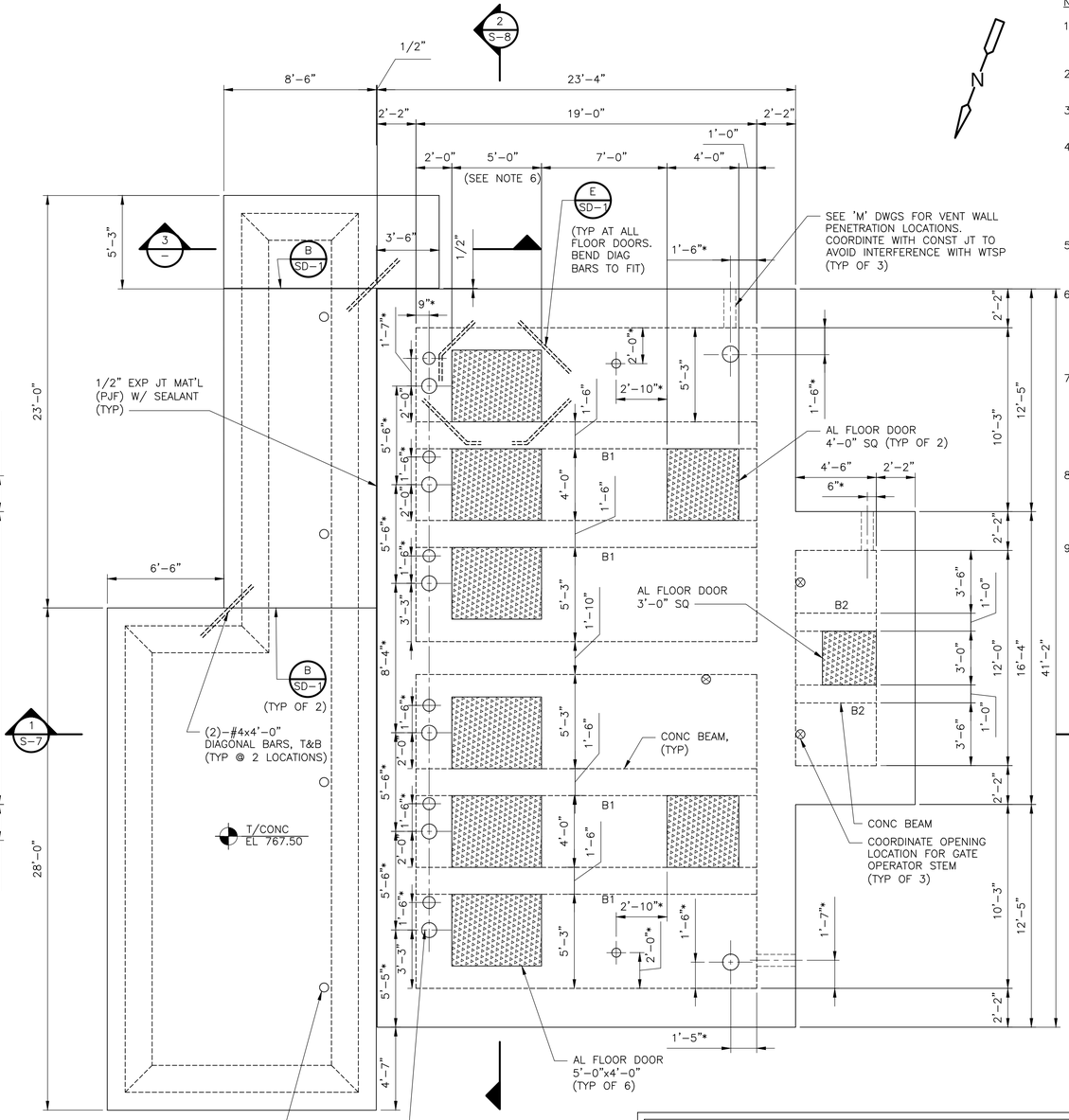

TOP

PLAN

1/4" = 1'-0"

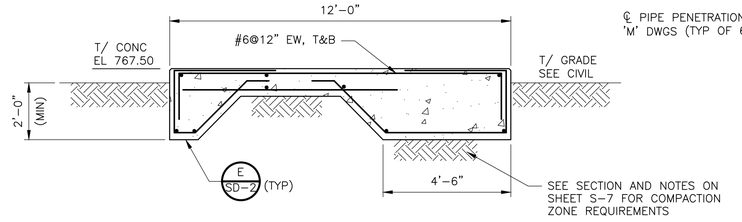

NOTES:

1. REFER TO MECHANICAL SHEETS FOR REQUIRED EQUIPMENT PAD AND PIPE SUPPORT DIMENSIONS AND LOCATIONS.
2. REFER TO MECHANICAL SHEETS FOR ALL PIPE PENETRATION LOCATIONS, AND DETAILS.
3. PROVIDE A MINIMUM OF 3" OF SEAL SLAB UNDER THE FOUNDATION SLAB.
4. REFERENCE GEOTECHNICAL INVESTIGATION ENTITLED "CITY OF GEORGETOWN – SLWTP TO SF WASTEWATER IMPROVEMENTS". TWO ZONES OF MATERIAL HAVE BEEN IDENTIFIED THAT MAY REQUIRE ATTENTION. THE CONTRACTOR SHALL TAKE APPROPRIATE MEASURES WHEN EXCAVATING FOR THIS STRUCTURE.
5. SEE SPECIFICATION SECTION 083483 FLOOR DOORS FOR FLOOR DOOR (ACCESS HATCH) REQUIREMENTS.
6. DIMENSIONS SHALL BE VERIFIED AND COORDINATED BY CONTRACTOR WITH PUMP SUPPLIER. ADJUST DIMENSION OF FLOOR OPENING AND LOCATION OF BEAMS AS REQUIRED AND SUBMIT UPDATED DIMENSIONS TO ENGINEER FOR REVIEW.
7. * COORDINATE LOCATION OF PENETRATIONS WITH WALLS, BEAMS, AND FLOOR DOOR EMBEDDED FRAMING. DO NOT ENCROACH ON BEAMS AND WALLS AND REMAIN AT LEAST 6" FROM FLOOR DOOR FRAMING. COORDINATE TOP SLAB PENETRATIONS WITH PROCESS MECHANICAL, ELECTRICAL, AND INSTRUMENTATION DRAWINGS.
8. PROVIDE OPENING REINFORCEMENT AT ALL FLOOR DOOR OPENINGS. BEND DIAGONAL BARS AS NEEDED TO AVOID CLASH WITH OTHER OPENINGS/PENETRATIONS. DO NOT CUT BARS SHORTER THAN THE MINIMUM LENGTH.
9. AT WALL OPENINGS CUT HORIZONTAL REINFORCEMENT AND PROVIDE ADDITIONAL REINFORCEMENT AS SHOWN ON STANDARD DETAIL E/SD-1.

1/4" = 1'- 0"

2 1 0 2 4

DESIGN LOAD DATA – D B WOOD LIFT STATION

SEISMIC	
BASIC SEISMIC FORCE RESISTING SYSTEM:	CONCRETE CAST-IN-PLACE WALL DESIGNED IN ACCORDANCE WITH ACI 350.3
DESIGN BASE SHEAR:	$\left[(Pi+Pw+Pr)^2 + Pc^2 + Py^2\right]^{0.5}$
SEISMIC RESPONSE COEFFICIENTS	Ci=0.042 Cc=0.006 Ct=0.020
RESPONSE MODIFICATION FACTOR:	Ri=3.0 Rc=1.0
ANALYSIS PROCEDURE USED:	EQUIVALENT LATERAL FORCE PROCEDURE

REFER TO SHEET S-1 FOR DESIGN LOAD DATA THAT IS THE SAME FOR ALL STRUCTURES.

STATE OF TEXAS
MAHNAZ MOSTAFAZADEH
141841
LICENSED
PROFESSIONAL ENGINEER
12/11/2023

REV. NO.	DATE	DRWN	CHKD	REMARKS

DESIGNED BY: B. ADITYA
DRAWN BY: K RAJENDRAN
SHEET CHK'D BY: W. KIAHON
CROSS CHK'D BY: E. RIVERA
APPROVED BY: M. MOSTAFAZADEH
DATE: DECEMBER 2023

CDM Smith
8310-1 N Capital of Texas Hwy, Suite 250
Austin, TX 78731
Tel: (512) 346-1100
TBPELS Firm Registration No. F-3043

CITY OF GEORGETOWN, TEXAS

CEDAR BREAKS AND D B WOOD LIFT STATIONS

D B WOOD LIFT STATION
FOUNDATION AND TOP PLANS

PROJECT NO. 2048-272644
FILE NAME: S006DBLS.dwg

SHEET NO.
S-6

Plotted: 12/12/2023 5:16:38 PM

© 2023 CDM SMITH ALL RIGHTS RESERVED.
REUSE OF DOCUMENTS: THESE DOCUMENTS AND DESIGNS PROVIDED BY PROFESSIONAL SERVICE, INCORPORATED HEREIN, ARE THE PROPERTY OF CDM SMITH AND ARE NOT TO BE USED, IN WHOLE OR PART, FOR ANY OTHER PROJECT WITHOUT THE WRITTEN AUTHORIZATION OF CDM SMITH.

NOTES:

1. REFER TO MECHANICAL SHEETS FOR REQUIRED EQUIPMENT PAD AND PIPE SUPPORT DIMENSIONS AND LOCATIONS.
2. REFER TO MECHANICAL SHEETS FOR ALL PIPE PENETRATION LOCATIONS, AND DETAILS.
3. SEE SHEET S-5 FOR ADDITIONAL NOTES.
4. ** REQUIREMENT VARIES WITH PUMP MANUFACTURER. VERIFY REQUIREMENTS PRIOR TO CONSTRUCTION AND REVISE AS REQUIRED.
5. EXCAVATION METHOD AND LIMITS SHALL BE DETERMINED BY THE CONTRACTOR IN ACCORDANCE WITH OSHA 29 CFR AND SUBMITTED TO THE ENGINEER FOR REVIEW AND APPROVAL PRIOR TO CONSTRUCTION.
6. FOR ADDITIONAL REINFORCING AT CORNERS/INTERSECTION, SEE FOUNDATION PLAN ON SHEET S-6.
7. FLOWABLE FILL LIFTS SHALL NOT BE PLACED UNTIL THE LIFT DIRECTLY BELOW HAS HARDENED TO FULL STRENGTH.

NOTES (CONT'D):

8. REFER TO FOUNDATION NOTES ON S-1 FOR GENERAL REQUIREMENTS OF SITE PREPARATION, SELECT STRUCTURAL FILL, AND COMPACTION REQUIREMENTS.
9. FILL LAYERS UP TO 6 FEET BELOW FINAL GRADE SHALL BE COMPACTED TO MINIMUM 98 PERCENT OF THE STANDARD EFFORT. INCREASE COMPACTION TO MINIMUM 100 PERCENT OF THE STANDARD EFFORT (ASTM D 698) MAXIMUM DRY DENSITY FOR FILL LAYERS DEEPER THAN 6 FEET BELOW FINAL GRADE.

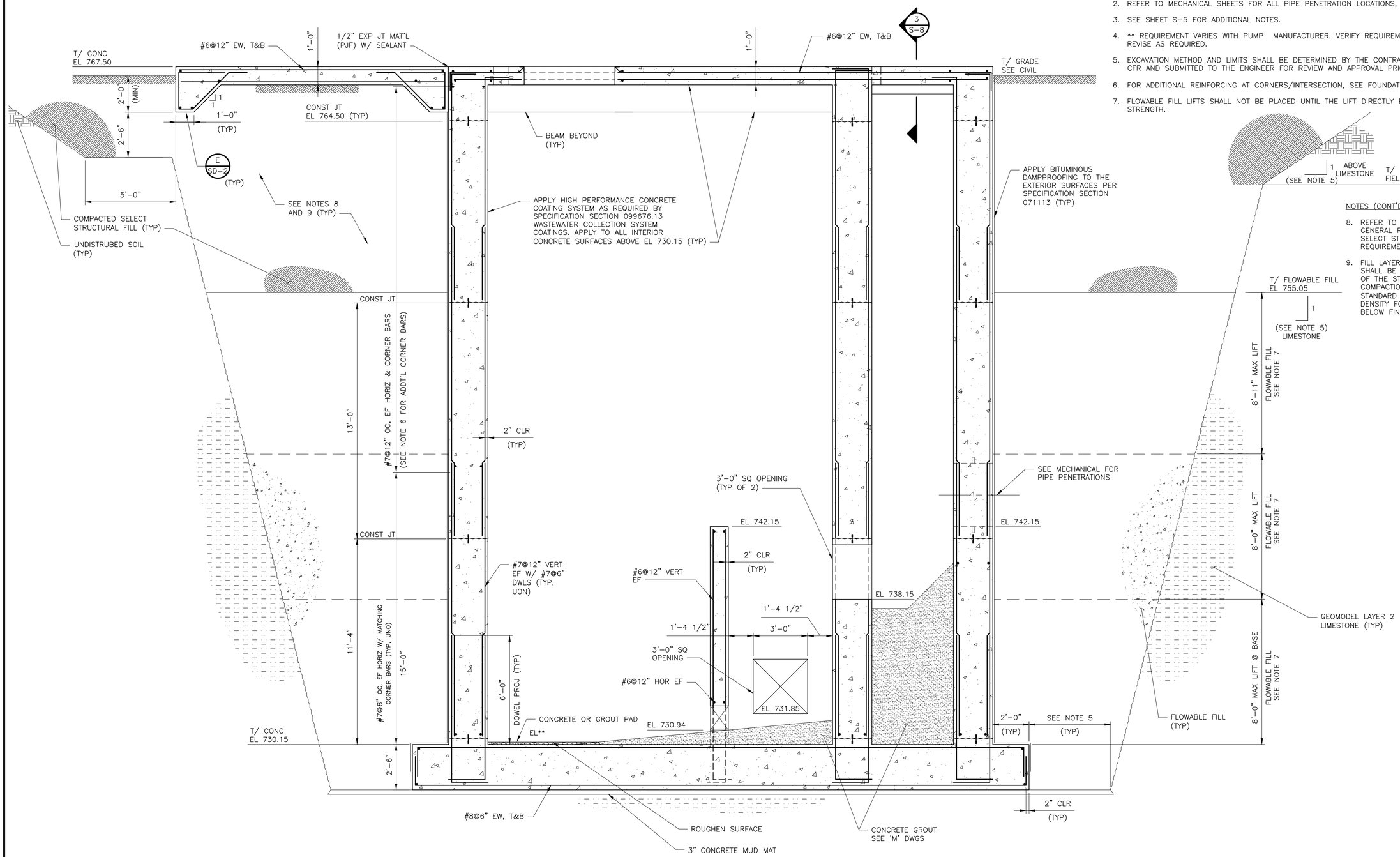

SECTION 1 / S-6
3/8" = 1'-0"

3/8" = 1'- 0"
2 0 2 4

STATE OF TEXAS
MAHNAZ MOSTAFAZADEH
141841
LICENSED
PROFESSIONAL ENGINEER
12/11/2023

REV. NO.	DATE	DRWN	CHKD	REMARKS

DESIGNED BY: B. ADITYA
DRAWN BY: K RAJENDRAN
SHEET CHK'D BY: W. KIAHON
CROSS CHK'D BY: E. RIVERA
APPROVED BY: M. MOSTAFAZADEH
DATE: DECEMBER 2023

CDM Smith
8310-1 N Capital of Texas Hwy, Suite 250
Austin, TX 78731
Tel: (512) 346-1100
TBPELS Firm Registration No. F-3043

CITY OF GEORGETOWN, TEXAS

CEDAR BREAKS AND D B WOOD LIFT STATIONS

D B WOOD LIFT STATION
SECTION I

PROJECT NO. 2048-272644
FILE NAME: S007LSSC.dwg
SHEET NO.
S-7

© 2023 CDM SMITH ALL RIGHTS RESERVED
REUSE OF DOCUMENTS: THESE DOCUMENTS AND DESIGNS PROVIDED BY PROFESSIONAL SERVICE, INCORPORATED HEREIN, ARE THE PROPERTY OF CDM SMITH AND ARE NOT TO BE USED, IN WHOLE OR PART, FOR ANY OTHER PROJECT WITHOUT THE WRITTEN AUTHORIZATION OF CDM SMITH.

Plotted: 12/12/2023 2:08:18 PM

© 2023 CDM SMITH ALL RIGHTS RESERVED.
REUSE OF DOCUMENTS: THESE DOCUMENTS AND DESIGNS PROVIDED BY PROFESSIONAL SERVICE, INCORPORATED HEREIN, ARE THE PROPERTY OF CDM SMITH AND ARE NOT TO BE USED, IN WHOLE OR PART, FOR ANY OTHER PROJECT WITHOUT THE WRITTEN AUTHORIZATION OF CDM SMITH.

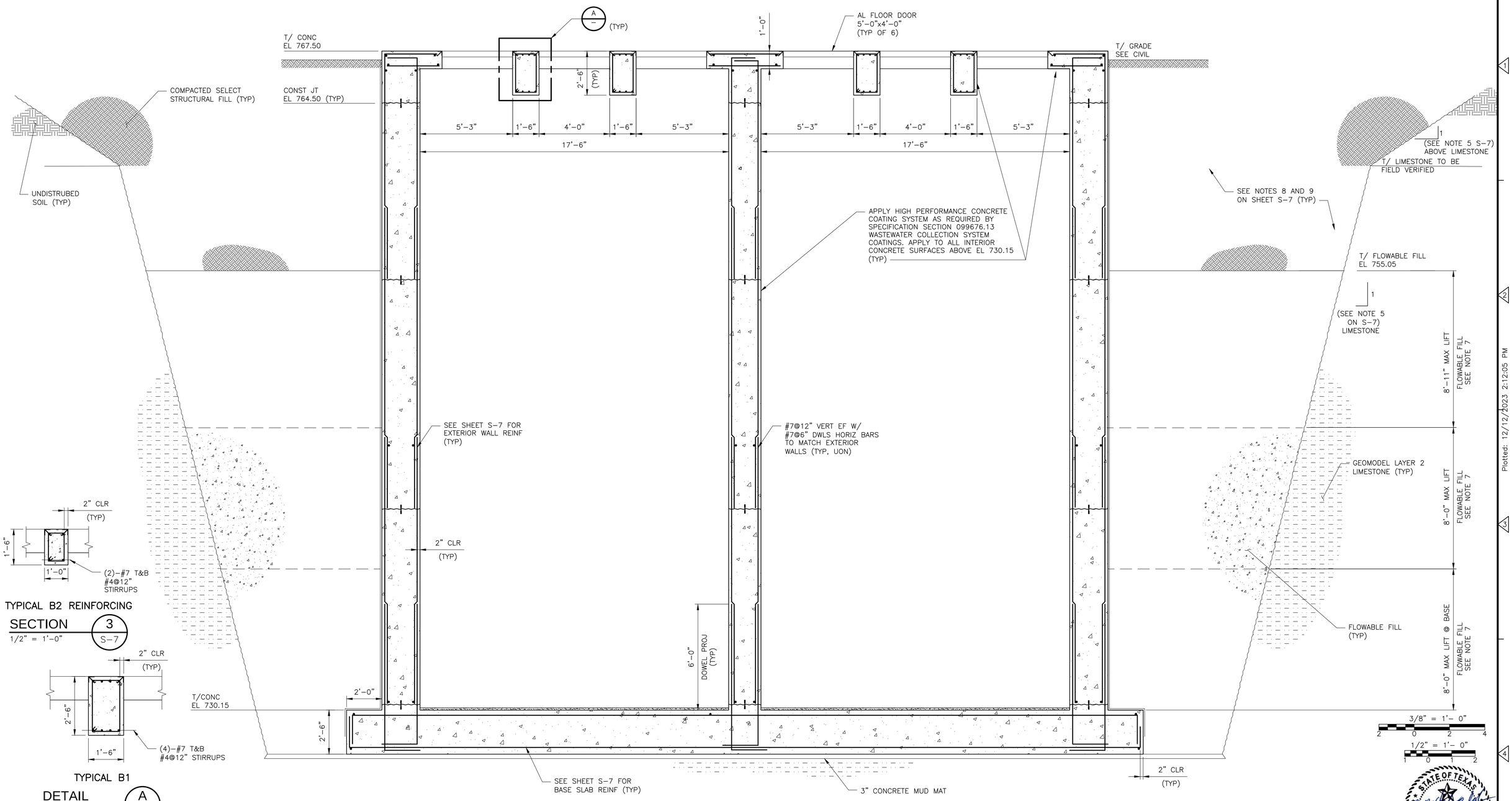

STATE OF TEXAS
MAHNAZ MOSTAFAZADEH
147841
LICENSED
PROFESSIONAL ENGINEER
12/11/2023

REV. NO.	DATE	DRWN	CHKD	REMARKS

DESIGNED BY: B. ADITYA
DRAWN BY: K. RAJENDRAN
SHEET CHK'D BY: W. KIAHON
CROSS CHK'D BY: E. RIVERA
APPROVED BY: M. MOSTAFAZADEH
DATE: DECEMBER 2023

CDM Smith
8310-1 N Capital of Texas Hwy, Suite 250
Austin, TX 78731
Tel: (512) 346-1100
TBPELS Firm Registration No. F-3043

CITY OF GEORGETOWN, TEXAS

CEDAR BREAKS AND D B WOOD LIFT STATIONS

D B WOOD LIFT STATION
SECTIONS AND DETAIL

PROJECT NO. 2048-272644
FILE NAME: S008LSSC.dwg
SHEET NO.
S-8

Plotted: 12/12/2023 2:12:05 PM

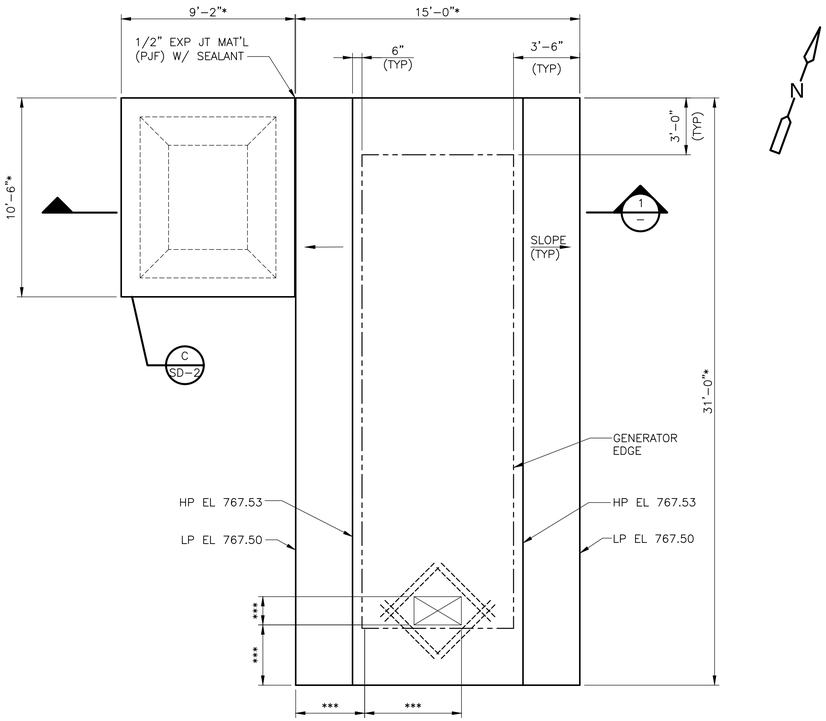

PLAN
1/4" = 1'-0"

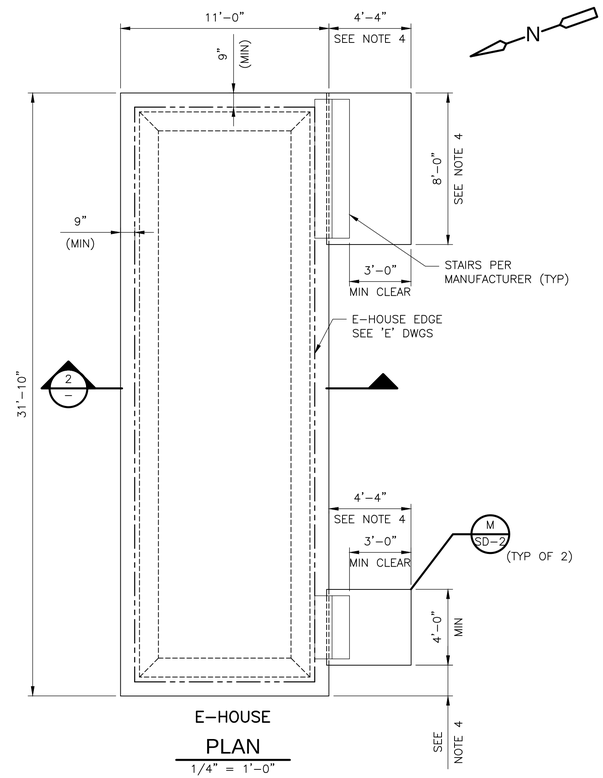

E-HOUSE
PLAN
1/4" = 1'-0"

NOTES:

1. * GENERATOR AND ATS PAD DIMENSIONS ARE CONSIDERED PRELIMINARY UNTIL GENERATOR AND ATS SHOP DRAWINGS HAVE BEEN SUBMITTED TO AND APPROVED BY THE ENGINEER. FINAL DESIGN, IF DIFFERENT THAN SHOWN HERE, WILL BE APPROVED AFTER FINAL GENERATOR SUBMITTAL IS APPROVED.
2. *** FOR BLOCKOUTS AND OPENINGS, PROVIDE OPENING REINFORCING PER DETAIL E/SD-1. COORDINATE SIZE AND LOCATION WITH MANUFACTURER OF FINAL EQUIPMENT, APPROVED BY THE ENGINEER.
3. ** IF LIMESTONE LAYER IS ENCOUNTERED WITHIN 3-FT COMPACTION ZONE, CONTACT ENGINEER TO COORDINATE REDUCTION IN COMPACTION ZONE DEPTH. NATIVE SOIL SHALL BE COMPLETELY REMOVED AND ONLY COMPACTED SELECT FILL SHALL BE USED BETWEEN BOTTOM OF SLABS ON GRADE AND THE TOP OF THE LIMESTONE ROCK LAYER.
4. COORDINATE SIZE OF E-HOUSE PAD AND CONNECTED ENTRANCE LANDINGS WITH APPROVED ELECTRICAL POWER HOUSE SHOP DRAWING THAT HAS BEEN REVIEWED AND APPROVED BY ENGINEER. THE DIMENSIONS AND LANDING LOCATIONS SHOWN HERE ARE PRELIMINARY AND ARE SUBJECT TO CHANGE. CONTRACTOR SHALL SUBMIT MARKUPS OF CHANGES FOR THE PAD LAYOUT ONCE FINAL APPROVED E-HOUSE SUBMITTAL IS RECEIVED. REFER TO ELECTRICAL DRAWINGS AND SPECIFICATION SECTION 266100 ELECTRICAL POWER HOUSE FOR MORE INFORMAITON ON THE E-HOUSE.
5. REFER TO FOUNDATION NOTES ON S-1 FOR GENERAL REQUIREMENTS OF SITE PREPARATION, SELECT STRUCTURAL FILL, AND COMPACTION REQUIREMENTS.

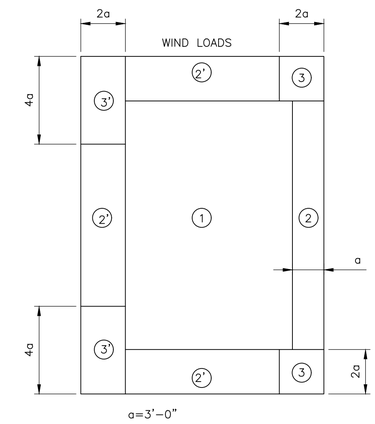

COMPONENTS & CLADDING E-HOUSE ROOF WIND PRESSURES (PSF)		
ZONE	MAXIMUM POSITIVE PRESSURE	MAXIMUM SUCTION PRESSURE
1	21.3	-43.9
2	21.3	-47.9
2'	21.3	-55.9
3	21.3	-54.8
3'	21.3	-71

NOTE: ALL TABULATED VALUES ARE STRENGTH LEVEL (1.0W) PRESSURES.

DETAIL A
NTS

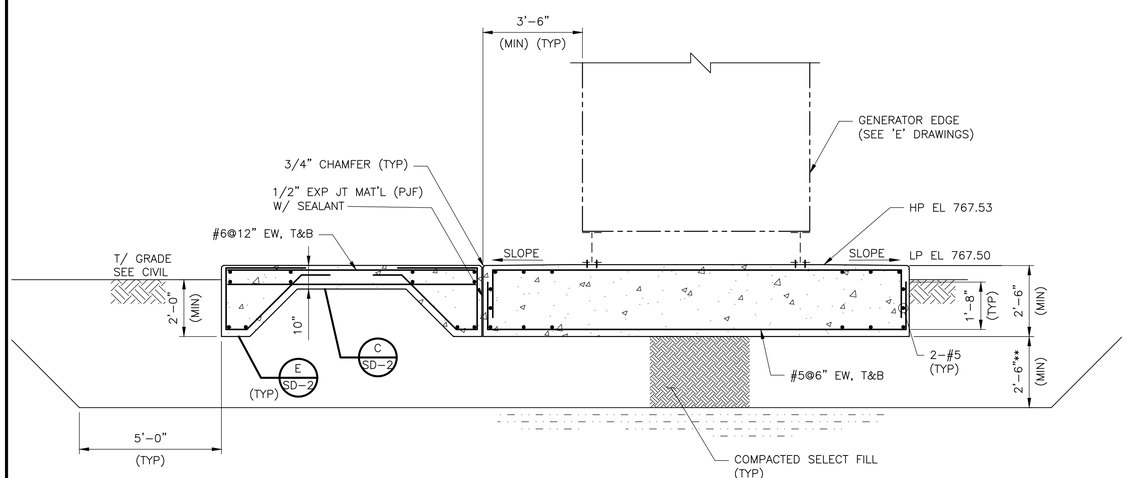

SECTION 1
3/8" = 1'-0"

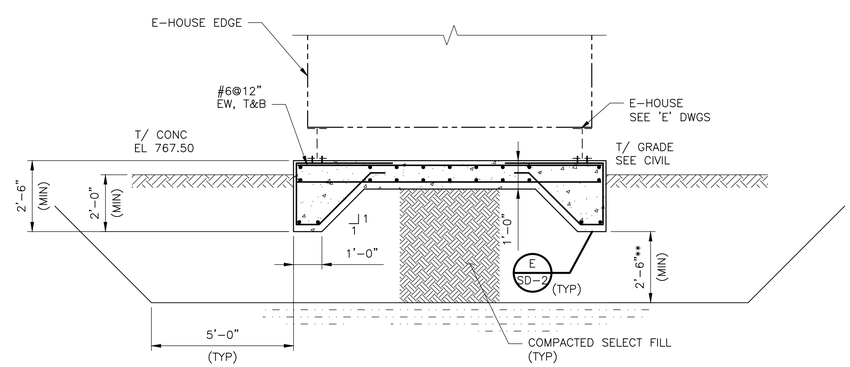

SECTION 2
3/8" = 1'-0"

3/8" = 1'- 0"
1/4" = 1'- 0"

STATE OF TEXAS
MAHNAZ MOSTAFAZADEH
141841
LICENSED
PROFESSIONAL ENGINEER
12/11/2023

REV. NO.	DATE	DRWN	CHKD	REMARKS

DESIGNED BY: B. ADITYA
DRAWN BY: K. RAJENDRAN
SHEET CHK'D BY: W. KIAHON
CROSS CHK'D BY: E. RIVERA
APPROVED BY: M. MOSTAFAZADEH
DATE: DECEMBER 2023

CDM Smith
8310-1 N Capital of Texas Hwy, Suite 250
Austin, TX 78731
Tel: (512) 346-1100
TBPELS Firm Registration No. F-3043

CITY OF GEORGETOWN, TEXAS

CEDAR BREAKS AND D B WOOD LIFT STATIONS

D B WOOD GENERATOR AND E-HOUSE PAD PLANS AND SECTIONS

PROJECT NO. 2048-272644
FILE NAME: S009DGPL.dwg
SHEET NO.
S-9

Plotted: 12/13/2023 3:03:27 PM

© 2023 CDM SMITH ALL RIGHTS RESERVED.
REUSE OF DOCUMENTS: THESE DOCUMENTS AND DESIGNS PROVIDED BY PROFESSIONAL SERVICE, INCORPORATED HEREIN, ARE THE PROPERTY OF CDM SMITH AND ARE NOT TO BE USED, IN WHOLE OR PART, FOR ANY OTHER PROJECT WITHOUT THE WRITTEN AUTHORIZATION OF CDM SMITH.

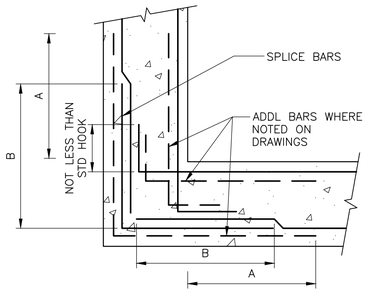

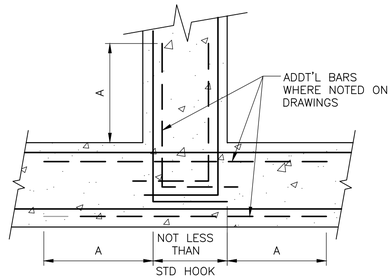

NOTES:

1. A = 1/4 CLEAR HORIZ SPAN, BUT NOT LESS THAN REQUIRED TENSION LAP NOR GREATER THAN 10 FEET.
2. B= TENSION LAP SPLICE
3. SPLICE BARS SHALL BE SAME SIZE & SPACING AS LARGER OF BARS BEING SPLICED, UNO, AND SHALL BE LAPPED W/TYPICAL WALL REINFORCING.
4. EXTEND BAR HOOKED ENDS TO FAR FACE OF WALL
5. ALTERNATE TYPICAL AND ADDT'L BARS, ADDT'L BARS TO BE IN SAME VERTICAL PLANE AS TYP WALL REINFORCING,
   ——— DENOTES TYP REINF
   — — — DENOTES ADDT'L REINF
6. REBAR DETAIL HAS OPTION TO PROVIDE "B" TENSION LAP SPLICE FOR ALL BARS AT END OF "A" LENGTH CORNER BAR, SO ALL CORNER BARS (TYPICAL & ADDT'L) HAVE SAME LENGTHS.

CORNER REINFORCING

DETAIL A
NTS –

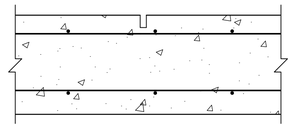

NOTES:

1. SAWCUT WIDTH ⅛" MINIMUM–¼" MAXIMUM.
2. SAWCUT DEPTH 1" MINIMUM–1½" MAXIMUM.
3. FILL JOINT TO FULL DEPTH WITH SELF–LEVELING SEALANT. USE BACKER ROD OR BOND BREAKER TAPE PER MANUFACTURER

CONTROL JOINT

DETAIL B
NTS –

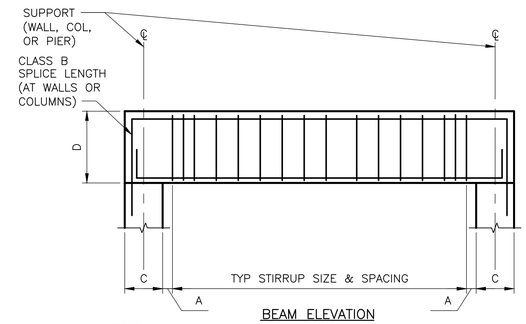

BEAM ELEVATION

NOTATION:

A. MAXIMUM 2 INCHES
C. SUPPORT WIDTH, INCHES
D. BEAM DEPTH, INCHES

NOTES:

1. WHERE SAME NUMBER & SIZE OF REINF BARS CONTINUE FROM SPAN TO SPAN, SPLICES MAY BE OMITTED. WHERE SPLICES ARE PROVIDED, LOCATE TOP SPLICES AT MIDSPAN & BOTTOM SPLICES OVER SUPPORTS AS INDICATED.
2. STIRRUPS SHALL BE CLOSED STIRRUPS, UNO.

CONCRETE BEAM

DETAIL C
NTS –

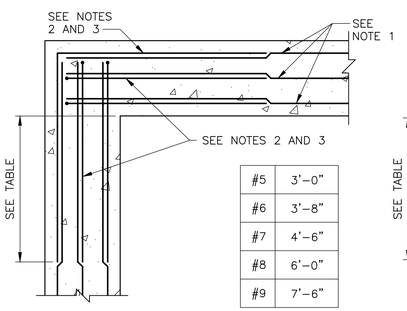

#5	3'–0"
#6	3'–8"
#7	4'–6"
#8	6'–0"
#9	7'–6"

CORNER REINFORCING

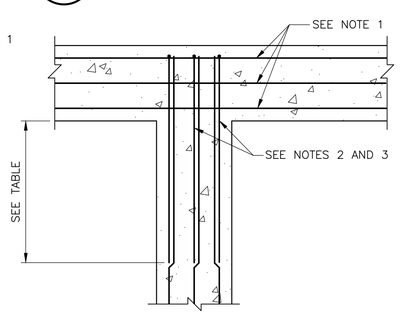

INTERSECTION REINFORCING

NOTES:

1. BASIC SLAB/WALL/BEAM REINFORCING AS SHOWN ON DESIGN DRAWINGS.
2. SIZE AND SPACING OF BAR TO MATCH WALL/BEAM REINFORCEMENT AS SHOWN ON DESIGN DRAWINGS.
3. FOR ADDITIONAL BARS AT CORNERS AND INTERSECTIONS SEE DESIGN DRAWINGS.
4. FOR DOWEL SIZE AND SPACING SEE DESIGN DRAWINGS.
5. FOR WALLS, TERMINATE WATERSTOP AND KEYWAY 8" BELOW TOP OF WALL.

BEAM/GRADE BEAM REINFORCING

DETAIL D
NTS –

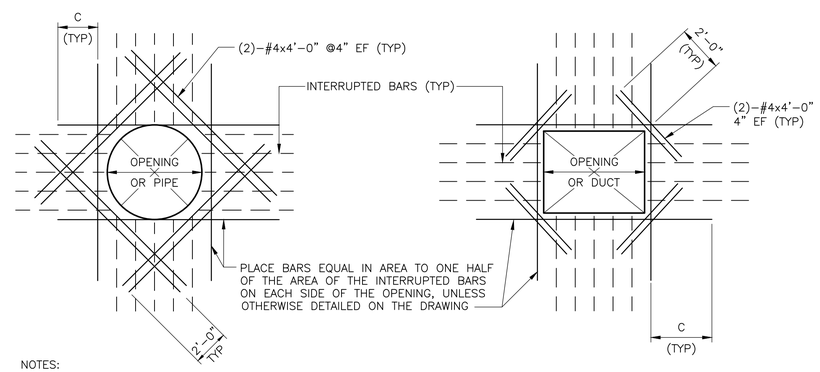

NOTES:

1. DETAIL IS TYPICAL FOR ALL OPENINGS 12" AND GREATER IN CONCRETE WALLS AND SLABS UNLESS OTHERWISE NOTED. SPREAD REINFORCING AT SMALLER OPENINGS.
2. BARS ARE NOT REQUIRED AT AN OPENING EDGE PARALLEL TO AND WITHIN 6 INCHES OF A WALL OR BEAM.
3. C= TENSION DEVELOPMENT LENGTH: PROVIDE STD HOOK IF FULL DEVELOPMENT LENGTH IS NOT POSSIBLE.
4. REINFORCING STEEL IS TO BE CARRIED ACROSS ALL CONSTRUCTION JOINTS.
5. WHERE OPENING IS WITHIN 4'–0" OF BASE SLAB, PROVIDE MATCHING DOWELS FOR ADDITIONAL BARS.

REINFORCING AT OPENINGS

DETAIL E
NTS –

2" & 3" COVER
6" OR GREATER SPACING

F'c=4,500 PSI
Fy=60,000 PSI

BAR SIZE	ALL (INCHES)					
	90° HOOK		SPLICE		STRAIGHT DEVELOPMENT	
	Idh	A	TOP BARS	OTHER BARS	TOP BARS	OTHER BARS
3	7	6	14	12	12	12
4	9	8	19	14	14	12
5	12	10	23	18	18	14
6	14	12	28	21	21	17
7	16	14	40	31	31	24
8	18	16	46	35	35	29
9	21	19	57	44	44	34
10	23	22	70	54	54	41
11	26	24	84	65	65	50

NOTES

1. TOP BARS ARE HORIZONTAL BARS PLACED SUCH THAT MORE THAN 12" OF CONCRETE IS CAST BELOW THE BAR. HORIZONTAL WALL BARS ARE TOP BARS.
2. 90° HOOKS SHALL BE LOCATED WITHIN THE CONFINED CORE OF A COLUMN OR BOUNDARY ELEMENT.
3. TABLE IS VALID FOR DESIGN BASED ON ACI 319–19 AND 350–06
4. TABLE IS BASED ON f'c = 4500 psi. LAP SPLICE AND DEVELOPMENT LENGTHS SHALL BE ADJUSTED FOR OTHER CONCRETE COMPRESSIVE STRENGTHS AS FOLLOWS:

f'c	MULTIPLIER
3000 PSI	1.23
3500 PSI	1.14
4000 PSI	1.06

5. FOR COVER AND SPACING GEOMETRY NOT SHOWN ALL HOOKS, SPLICES AND DEVELOPMENT LENGTHS SHALL BE APPROVED IN WRITING BY THE ENGINEER OF RECORD.
6. LAPPED SPLICES SHALL NOT BE MADE AT POINTS OF MAXIMUM STRESS UNLESS NOTED OTHERWISE. INDICATED ON THE DRAWING OR DETERMINED BY ENGINEER.
7. UNLESS NOTED OTHERWISE ON DRAWINGS, THE BARS AT A LAP SPLICE SHALL BE IN CONTACT WITH EACH OTHER.
8. FOR STRAIGHT DEVELOPMENT LENGTH, DIVIDE SPLICE LENGTH BY 1.3, ROUNDING OFF TO THE NEXT WHOLE NUMBER, BUT NOT LESS THAN 12".

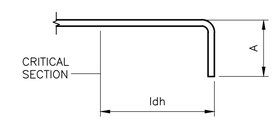

STANDARD HOOKS, CLASS B LAP SPLICE AND DEVELOPMENT LENGTHS (FOR UNCOATED BARS)

LAP SPLICE

DETAIL F
NTS –

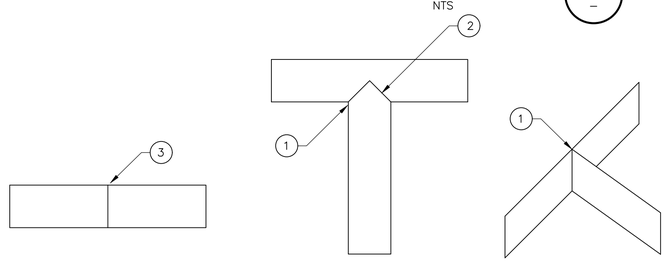

FIELD SPLICE

FLAT TEE

VERTICAL TEE

WATERSTOP NOTES:

1. FACTORY FABRICATED INTERSECTION PIECES.
2. USE THERMOSTATICALLY CONTROLLED SPLICING IRON TO WELD INTERSECTION PIECE TO FIELD PIECE SPLICING IRON SHALL BE DESIGNED SPECIFICALLY FOR THE WATERSTOP BEING SPLICED.
3. USE INDIRECT SOURCE OF HEAT ONLY. USE OF DIRECT FLAME IS SPECIFICALLY PROHIBITED.
4. FOLLOW MANUFACTURER'S RECOMMENDATIONS FOR ALL SPLICING AND WELDING REQUIREMENTS.

PVC WATERSTOP SPLICE AND JOINTS

DETAIL G
NTS –

STATE OF TEXAS
MAHNAZ MOSTAFAZADEH
147841
LICENSED
PROFESSIONAL ENGINEER
12/11/2023

REV. NO.	DATE	DRWN	CHKD	REMARKS

DESIGNED BY: E. RIVERA
DRAWN BY: J. GILEZAN
SHEET CHK'D BY: W. KIAHON
CROSS CHK'D BY: E. RIVERA
APPROVED BY: M. MOSTAFAZADEH
DATE: DECEMBER 2023

CDM Smith
8310-1 N Capital of Texas Hwy, Suite 250
Austin, TX 78731
Tel: (512) 346-1100
TBPELS Firm Registration No. F-3043

CITY OF GEORGETOWN, TEXAS

CEDAR BREAKS AND D B WOOD LIFT STATIONS

STRUCTURAL
STANDARD DETAILS I

PROJECT NO. 2048–272644
FILE NAME: SZ01NFDT.dwg
SHEET NO.
SD-1

Plotted: 12/12/2023 2:52:15 PM

© 2023 CDM SMITH ALL RIGHTS RESERVED.
REUSE OF DOCUMENTS: THESE DOCUMENTS AND DESIGNS PROVIDED BY PROFESSIONAL SERVICE, INCORPORATED HEREIN, ARE THE PROPERTY OF CDM SMITH AND ARE NOT TO BE USED, IN WHOLE OR PART, FOR ANY OTHER PROJECT WITHOUT THE WRITTEN AUTHORIZATION OF CDM SMITH.

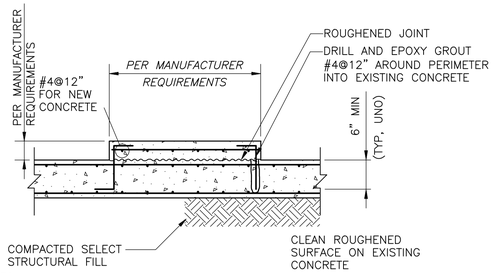

NOTES:

1. FOR EQUIPMENT PADS > 12" TALL PROVIDE CONTINUOUS #4@12 BAR ALL AROUND SIDES.
2. PROVIDE 6" MIN EDGE DISTANCE ON ALL EQUIP ANCHOR BOLTS.

HOUSEKEEPING PAD FOR NEW OR EXISTING SLAB

DETAIL A
NTS

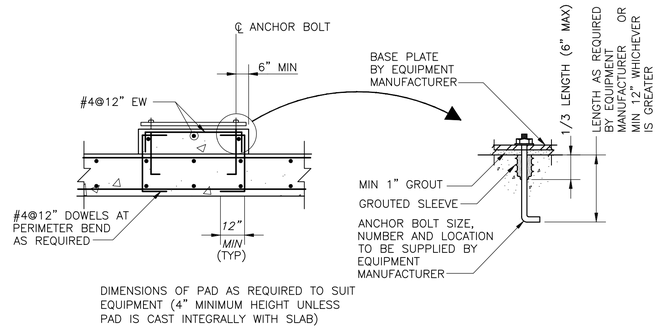

EQUIPMENT PAD

DETAIL B
NTS

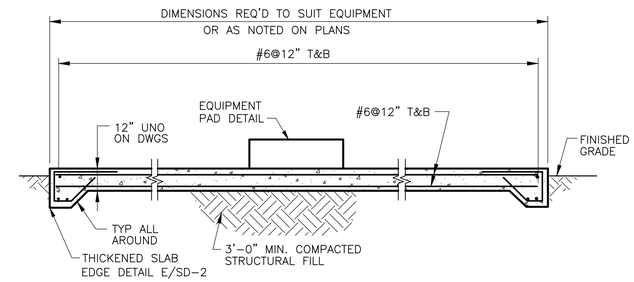

EQUIPMENT SLAB

DETAIL C
NTS

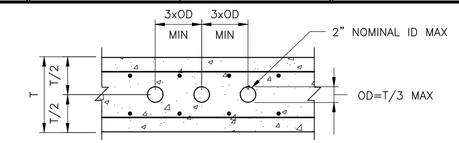

CONDUIT NOTES:

1. NO CONDUIT SHALL BE EMBEDDED IN STRUCTURAL BEAMS, COLUMNS, WALLS OR SLABS UNLESS SPECIFICALLY SHOWN ON THE STRUCTURAL DRAWING
2. CONDUIT SHALL BE PLACED 6" BELOW SLABS
3. WHERE CONDUIT MUST PASS THROUGH A SLAB OR WALL, MINIMUM SIZE AND SPACING REQUIREMENT PER ACI 318–SECTION 6.3 AND DETAIL D/SD–2
4. ALUMINUM SHALL NOT BE EMBEDDED IN CONCRETE UNLESS COATED TO PREVENT ALUMINUM–CONCRETE REACTION

CONDUIT PASSING THROUGH SLAB OR WALL

DETAIL D
NTS

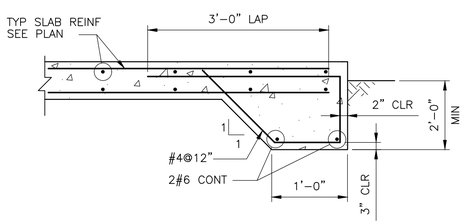

THICKENED EDGE SLAB

DETAIL E
NTS

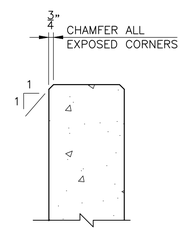

CHAMFER

DETAIL F
NTS

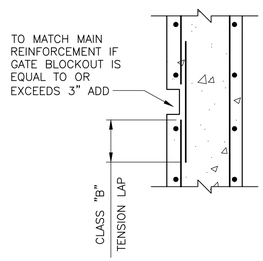

WALL GATE BLOCKOUT

DETAIL G
NTS

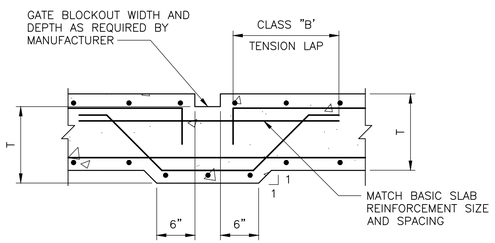

SLAB GATE BLOCKOUT

DETAIL H
NTS

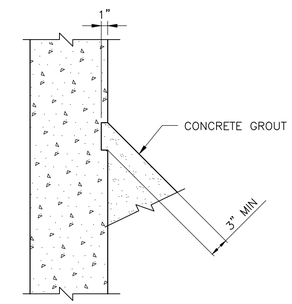

GROUT FILLET

DETAIL J
NTS

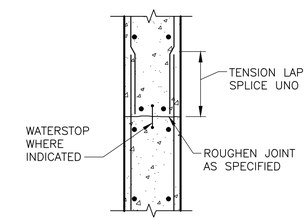

NOTES:

1. DETAIL SHOWN FOR WALLS; SLABS SIMILAR.

CONSTRUCTION JOINT

DETAIL K
NTS

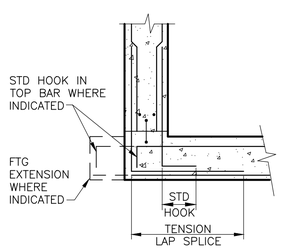

END WALL

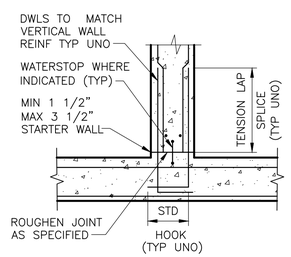

INTERMEDIATE WALL

NOTES:

1. STARTER WALL MAY BE ELIMINATED AT JOINTS WITHOUT WATERSTOP.
2. SEE INTERMEDIATE WALL FOR INFORMATION NOT GIVEN FOR END WALL.
3. PROVIDE ADDITIONAL REINFORCEMENT EF IN BOT 3'–0" OF WALL WHERE NOTED ON DRAWINGS. BARS SHALL BE SAME SIZE AS AND LOCATED HALFWAY BETWEEN TYPICAL HORIZ REINFORCEMENT.

WALL CONSTRUCTION JOINT AT BASE SLAB

DETAIL L
NTS

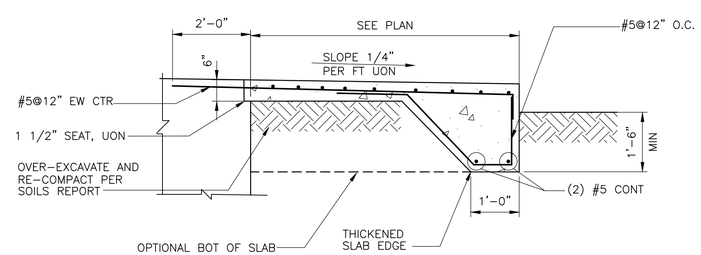

NOTES:

1. LANDING WIDTH = WIDTH OF DOOR OPENING +6" EACH SIDE UNLESS OTHERWISE NOTED.
2. WHERE EMBEDMENT LENGTH IS NOT AVAILABLE PROVIDE STANDARD HOOK.

DOOR APRON/ SLAB

DETAIL M
NTS

STATE OF TEXAS
MAHNAZ MOSTAFAZADEH
147841
LICENSED
PROFESSIONAL ENGINEER
12/11/2023

REV. NO.	DATE	DRWN	CHKD	REMARKS

DESIGNED BY: E. RIVERA
DRAWN BY: J. GILEZAN
SHEET CHK'D BY: W. KIAHON
CROSS CHK'D BY: E. RIVERA
APPROVED BY: M. MOSTAFAZADEH
DATE: DECEMBER 2023

CDM Smith
8310-1 N Capital of Texas Hwy, Suite 250
Austin, TX 78731
Tel: (512) 346-1100
TBPELS Firm Registration No. F-3043

CITY OF GEORGETOWN, TEXAS

CEDAR BREAKS AND D B WOOD LIFT STATIONS

STRUCTURAL
STANDARD DETAILS II

PROJECT NO. 2048–272644
FILE NAME: SZ02NFDT.dwg

SHEET NO.
SD-2

© 2023 CDM SMITH ALL RIGHTS RESERVED.
REUSE OF DOCUMENTS: THESE DOCUMENTS AND DESIGNS PROVIDED BY PROFESSIONAL SERVICE, INCORPORATED HEREIN, ARE THE PROPERTY OF CDM SMITH AND ARE NOT TO BE USED, IN WHOLE OR PART, FOR ANY OTHER PROJECT WITHOUT THE WRITTEN AUTHORIZATION OF CDM SMITH.

Plotted: 12/12/2023 7:16:34 PM

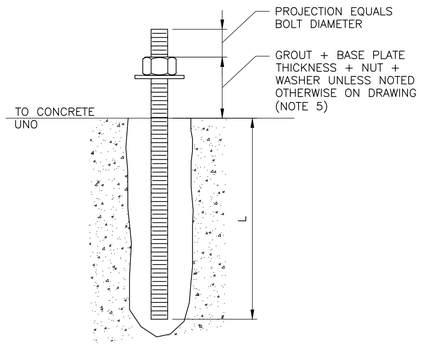

316 SS ADHESIVE ANCHOR BOLTS

DETAIL A
NTS –

NOTES:

1. BOLT EDGE DISTANCE SHALL BE A MINIMUM OF 1.5 X L, UNO ON THE DRAWINGS. SMALLER EDGE DISTANCE SHALL BE APPROVED BY THE ENGINEER OF RECORD.
2. MINIMUM CENTER TO CENTER SPACING OF BOLTS SHALL BE 3 X L, UNO ON THE DRAWINGS. SMALLER BOLT SPACING SHALL BE APPROVED BY THE ENGINEER OF RECORD.
3. HOLES SHALL BE DRILLED USING A HAMMER DRILL BIT UNO.
4. PROVIDE 1 1/2" – INCHES NON–SHRINK GROUT UNDER BASE PLATE, UNO.
5. BOLT SHALL CONFORM TO ASTIM F 593, TYPE 316 CW1 FOR DIAMETERS BETWEEN 1/4 TO 5/8 – INCHES INCLUSIVE, AND ASTM F 593, TYPE 316 CW2 FOR BOLT DIAMETERS 3/4 – INCHES AND GREATER IN DIAMETER.
6. NUT SHALL CONFORM TO ASTM F 594 GROUP 2, HEX, UNO.
7. WASHERS SHALL CONFORM TO ASTM A 240.
8. CONTRACTOR SHALL COORDINATE BOLT PROJECTION WITH EQUIPMENT MANUF.

BOLT DIA (IN)	"L" MIN (IN)	MIN WASHER THICKNESS (IN)
1/2	5	0.097
5/8	7	0.122
3/4	8	0.122
7/8	10	0.136
1	12	0.136
1 1/8	14	0.136
1 1/4	16	0.136

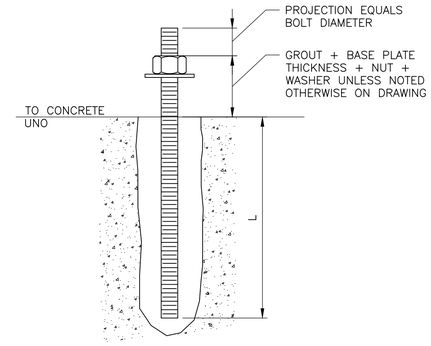

CARBON STEEL ADHESIVE ANCHOR BOLTS

DETAIL B
NTS –

BOLT DIA (IN)	"L" MIN (IN)	MIN WASHER THICKNESS (IN)
1/2	4.5	0.097
5/8	6.5	0.122
3/4	7.5	0.122
7/8	9.5	0.136
1	11	0.136
1 1/8	12.5	0.136
1 1/4	14.5	0.136

NOTES:

1. BOLT EDGE DISTANCE SHALL BE A MINIMUM OF 1.5 X L, UNO ON THE DRAWINGS. SMALLER EDGE DISTANCE SHALL BE APPROVED BY THE ENGINEER OF RECORD.
2. MINIMUM CENTER TO CENTER SPACING OF BOLTS SHALL BE 3 X L, UNO ON THE DRAWINGS. SMALLER BOLT SPACING SHALL BE APPROVED BY THE ENGINEER OF RECORD.
3. HOLES SHALL BE DRILLED USING A HAMMER DRILL CARBIDE BIT OR EQUAL.
4. PROVIDE 1 1/2" – INCHES NON–SHRINK GROUT UNDER BASE PLATE, UNO.
5. CONTRACTOR SHALL COORDINATE BOLT PROJECTION WITH ALUMINUM ROOF AND/OR EQUIPMENT MANUF.

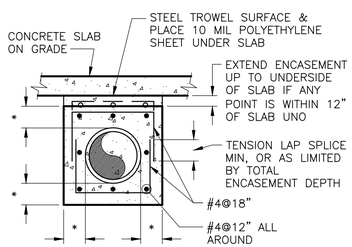

NOTES:

1. * = 8" MIN FOR PIPE ≤ 24"ø, 12" MIN FOR PIPE > 24"ø.
2. CONCRETE ENCASEMENT SHALL BE TERMINATED AT PIPE JOINTS ONLY.
3. SEE DETAIL D/– FOR LIMIT OF ENCASEMENT BEYOND EDGE OF BLDG / SLAB.
4. WHERE ENCASEMENT TERMINATES AT CONCRETE WALL OR SLAB PROVIDE MATCHING DOWEL TO LAP WITH LONGITUDINAL BARS.

PIPE ENCASEMENT

DETAIL C
NTS –

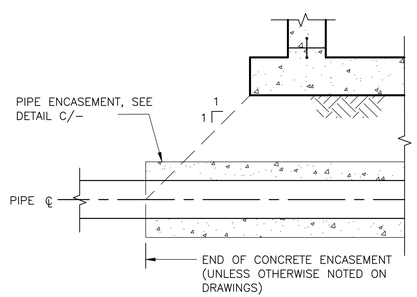

END OF PIPE ENCASEMENT UNDER STRUCTURES

DETAIL D
NTS –

STATE OF TEXAS
MAHNAZ MOSTAFAZADEH
147841
LICENSED
PROFESSIONAL ENGINEER
12/11/2023

REV. NO.	DATE	DRWN	CHKD	REMARKS

DESIGNED BY: E. RIVERA
DRAWN BY: J. GILEZAN
SHEET CHK'D BY: W. KIAHON
CROSS CHK'D BY: E. RIVERA
APPROVED BY: M. MOSTAFAZADEH
DATE: DECEMBER 2023

CDM Smith
8310-1 N Capital of Texas Hwy, Suite 250
Austin, TX 78731
Tel: (512) 346-1100
TBPELS Firm Registration No. F-3043

CITY OF GEORGETOWN, TEXAS

CEDAR BREAKS AND D B WOOD LIFT STATIONS

STRUCTURAL
STANDARD DETAILS III

PROJECT NO. 2048–272644
FILE NAME: SZ02NFDT.dwg
SHEET NO.
SD-3

© 2023 CDM SMITH ALL RIGHTS RESERVED.
REUSE OF DOCUMENTS: THESE DOCUMENTS AND DESIGNS PROVIDED BY PROFESSIONAL SERVICE, INCORPORATED HEREIN, ARE THE PROPERTY OF CDM SMITH AND ARE NOT TO BE USED, IN WHOLE OR PART, FOR ANY OTHER PROJECT WITHOUT THE WRITTEN AUTHORIZATION OF CDM SMITH.

Plotted: 12/12/2023 3:01:41 PM

PIPING SYMBOLS

DOUBLE LINE SYMBOL	SINGLE LINE SYMBOL	FEATURE
		WELDED JOINT
		BLIND FLANGE
SEE NOTE 2		FLANGED JOINT COMPLEX REPRESENTATION.
		MECHANICAL JOINT COMPLEX REPRESENTATION.
		PUSH ON JOINT OR CAULKED BELL & SPIGOT JOINT SIMPLIFIED REPRESENTATION
		PUSH ON JOINT OR CAULKED BELL & SPIGOT JOINT COMPLEX REPRESENTATION
		PUSH ON JOINT OR CAULKED BELL & SPIGOT JOINT RESTRAINED
		BALL JOINT
		DIRECTION OF FLOW
		PLAIN END x PLAIN END PIPE COUPLING
		PLAIN END x PLAIN END PIPE COUPLING RESTRAINED
		FLANGE x PLAIN END PIPE COUPLING
A B TYPE IDENTIFICATION REFER TO SPECS	A B	FLEXIBLE COUPLING OR EXPANSION JOINT (SLEEVE TYPE)
		FLEXIBLE COUPLING OR EXPANSION JOINT (BELLOWS TYPE)
F OR R		COUPLING FOR GROOVED END JOINTS: F FLEXIBLE R RIGID
		FLANGE GUARD
		FLANGE FILLER
		UNION
		QUICK CONNECT COUPLING
		HOSE COUPLING

PIPE AND FITTING SYMBOL NOTES

1 SIMPLIFIED JOINT SYMBOL IS USED FOR ALL SINGLE LINE PIPING SHOWN ON THE INTERIOR & EXTERIOR PIPING DRAWINGS.

2 UNLESS MODIFIED BY THE GENERAL PROJECT NOTES OR DETAILED ON THE LAYOUT AND SCHEMATIC DRAWINGS PIPE & FITTING JOINT REQUIREMENTS FOR THE VARIOUS PIPE MATERIALS ARE DEFINED IN THE SPECIFICATIONS.

EQUIPMENT / VALVE TAG

NOTE: ONLY NEW VALVES 4" OR LARGER WILL BE TAGGED.

SHFP–01

16"–PTW–GV–01

- EQUIPMENT CODE
- NUMERICAL INDICATOR UNIQUE NUMBER ASSIGNED TO EACH PIECE OF EQUIPMENT
- NUMERICAL INDICATOR UNIQUE NUMBER ASSIGNED TO EACH VALVE
- ABBREVIATION INDICATING TYPE OF VALVE, i.e. GATE
- PROCESS FLUID ABBREVIATION
- VALVE SIZE

PIPE TAG

(3) 2" PTW–PVC/F

- NUMERICAL INDICATOR FOR MULTIPLE IDENTICAL FLOWSTREAMS
- NOMINAL PIPE SIZE
- JOINT DESIGNATION SEE PIPE JOINT LEGEND
- PIPE MATERIAL SEE ABBREVIATIONS
- PROCESS FLUID ABBREVIATION SEE ABBREVIATIONS

DEPICTED ARE: THREE, 2" DIAMETER POLYVINYL CHLORIDE PIPES WITH FLANGED JOINTS SCHEDULED TO TRANSPORT PROTECTED WATER.

VALVE SYMBOLS

SYMBOL	FEATURE
	CAP OR PLUG
	UNCLASSIFIED. TYPE AS SHOWN ON THE DRAWINGS ADJACENT TO SYMBOL
	FLOW METER
V	TELESCOPING VALVE
	VALVE WITH HOSE END (FLUSHING CONNECTION)
	GATE VALVE
K	KNIFE GATE VALVE
	GLOBE VALVE
	BALL VALVE
	3–WAY BALL VALVE
	4–WAY BALL VALVE
	CONE VALVE
	NEEDLE VALVE
	PINCH VALVE
	DIAPHRAGM VALVE
	BUTTERFLY VALVE
BFD	BUTTERFLY VALVE DAMPER (AIR PIPING)
	PLUG VALVE
	CHECK VALVE, GENERAL SYMBOL
	BALL CHECK VALVE
	DOUBLE DOOR CHECK VALVE
	ANGLE VALVE
S	SOLENOID VALVE
S	THREE WAY SOLENOID VALVE
M	MOTOR OPERATED VALVE
	FLAP VALVE
	SHEAR GATE
	MUD VALVE
FD	FLOOR DRAIN
ED	EQUIPMENT DRAIN
	ECCENTRIC REDUCER OR REDUCING BUSHING
	CONCENTRIC REDUCER OR REDUCING BUSHING
	Y–STRAINER
	YARD HOSE STATION
	CALIBRATION CYLINDER
	AIR RELEASE VALVE
CO	CLEAN OUT
	DOWN
	UP
	DROP OR RISE
	PRESSURE RELIEF VALVE
	BALL VALVE – CHLORINE SERVICE
	VACUUM REGULATOR
	SELF–CONTAINED PRESSURE REGULATING VALVE
	BACK PRESSURE VALVE
	VACUUM RELIEF VALVE

VALVE SYMBOLS (CONTINUED)

SYMBOL	FEATURE
	SPRING RETURN BALL VALVE
	DIAPHRAGM SEAL STANDARD
	DIAPHRAGM SEAL SPECIAL SERVICE
	DIAPHRAGM CHECK VALVE

GATE SYMBOLS

PLAN	FEATURE
	SLUICE GATE (SG)
	SLIDE GATE (SLG)
	WEIR SLIDE GATE (WSLG)
	STOP PLATE (SP)

SECTION (OPERATOR ONLY)	FEATURE
	SLUICE GATE (SG)
	SLIDE GATE (SLG)
	WEIR SLIDE GATE (WSLG)

EQUIPMENT SYMBOLS FOR PROCESS MECHANICAL DIAGRAMS

SYMBOL	TYPE
	CENTRIFUGAL PUMP
PS	PRESSURE SWITCH
PI	PRESSURE GAUGE
VI	VACUUM GAUGE
FS	FLOW SWITCH/FLOW SENSOR
DPI	DIFFERENTIAL PRESSURE GAUGE
PIT	PRESSURE INDICATING TRANSMITTER
LE	LEVEL ELEMENT
LIT	LEVEL INDICATING TRANSMITTER
LS	LEVEL SWITCH
WT	WEIGHT TRANSMITTER
LSH	LEVEL SWITCH HIGH

PIPE JOINT LEGEND

DESIGNATION	PIPE JOINT
F	FLANGED
G	GROOVED
P	MECHANICAL JOINT

PIPE MATERIAL

CI	CAST IRON
CIS	CAST IRON – SOIL
CS	CARBON STEEL
DI	DUCTILE IRON
FRP	FIBER REINFORCED PLASTIC
GS	GALVANIZED CARBON STEEL
PVC	POLYVINYL CHLORIDE
SST	STAINLESS STEEL
STL	STEEL

PROCESS FLUID ABBREVIATIONS

EFF	EFFLUENT
INF	INFLUENT
SWR	SEWER LINE

EQUIPMENT IDENTIFICATION SYSTEM
EQUIPMENT CODES

ARV	AIR RELIEF VALVE
ARVV	AIR RELIEF/VACUUM
BCV	BALL CHECK VALVE
BFD	BUTTERFLY VALVE DAMPER
BFPV	BACK FLOW PREVENTER
CFG	CENTRIFUGE
CFP	CENTRIFUGE PUMPS
CV	CHECK VALVE
GV	GATE VALVE
PCV	PUMP CONTROL VALVE
PV	PLUG VALVE

NOTES

1. PIPE HANGERS SHALL BE PROVIDED IN ACCORDANCE WITH SECTION 15140 AND AS SHOWN ON DRAWINGS.
2. ALL PIPING INSTALLED BELOW A PROCESS STRUCTURE SHALL BE ENCASED IN ACCORDANCE WITH DETAIL C ON SHEET SZ–2 UNLESS NOTED OTHERWISE.

STATE OF TEXAS
GERALD S. FURRIER
129811
LICENSED PROFESSIONAL ENGINEER
12/11/2023

REV. NO.	DATE	DRWN	CHKD	REMARKS

DESIGNED BY: M. TESFAI
DRAWN BY: D. SNEHA
SHEET CHK'D BY: M. MAHADEVAN
CROSS CHK'D BY: M. TESFAI
APPROVED BY: G. FURRIER
DATE: DECEMBER 2023

CDM Smith
8310-1 N Capital of Texas Hwy, Suite 250
Austin, TX 78731
Tel: (512) 346-1100
TBPELS Firm Registration No. F-3043

CITY OF GEORGETOWN, TEXAS

CEDAR BREAKS AND D B WOOD LIFT STATIONS

MECHANICAL LEGEND

PROJECT NO. 2048–272644
FILE NAME: M001NFLG
SHEET NO. M-1

XREFs: [CDMS_2234_LS_Border] Images: []
Last saved by: RANUTHV Time: 11/1/2023 5:41:33 PM
pw:\\cdmsmith-ad2-pw.bentley.com:pw_pri\12049\272644\04 Design Services NM_50%\05 Process Mechanical\10 BIM_CADD\M001NFLG.dwg
© 2023 CDM SMITH ALL RIGHTS RESERVED.
REUSE OF DOCUMENTS: THESE DOCUMENTS AND DESIGNS PROVIDED BY PROFESSIONAL SERVICE, INCORPORATED HEREIN, ARE THE PROPERTY OF CDM SMITH AND ARE NOT TO BE USED, IN WHOLE OR PART, FOR ANY OTHER PROJECT WITHOUT THE WRITTEN AUTHORIZATION OF CDM SMITH.

Plotted: 12/13/2023 6:33:50 PM

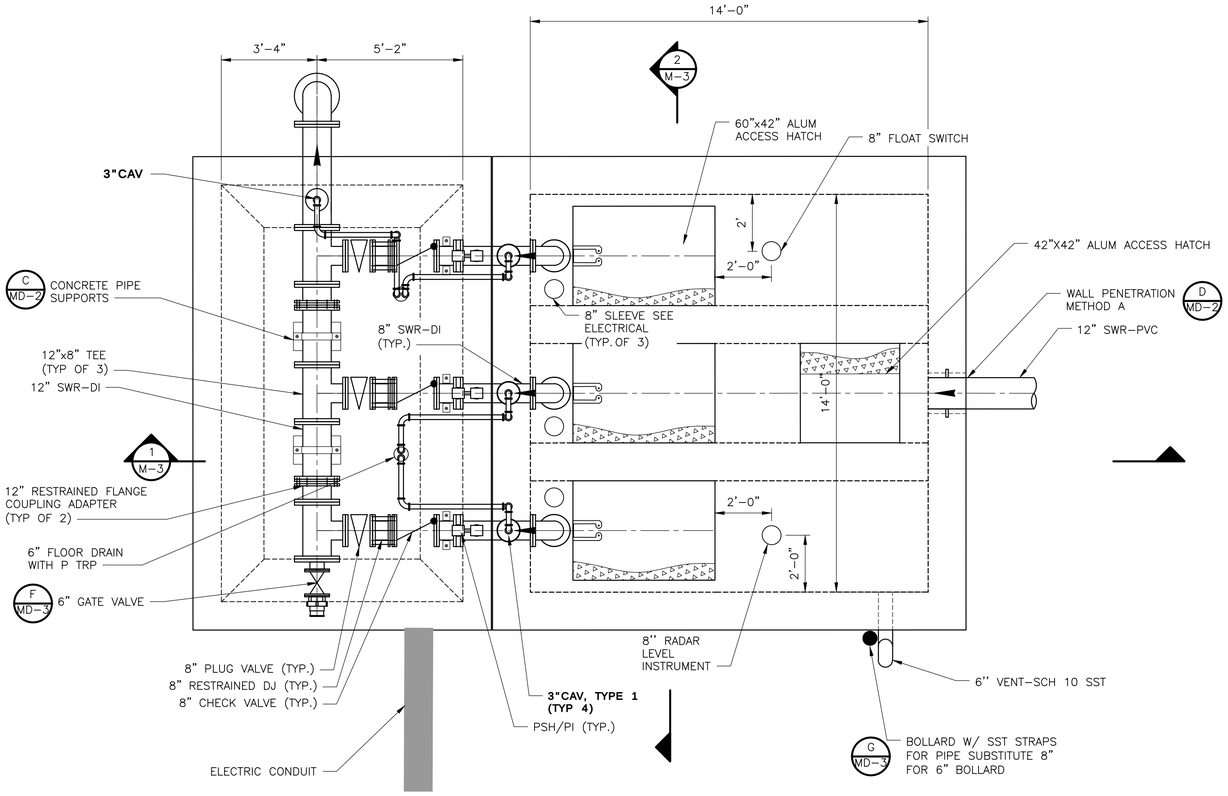

UPPER PLAN @ 810.00

PLAN

3/8" = 1'-0"

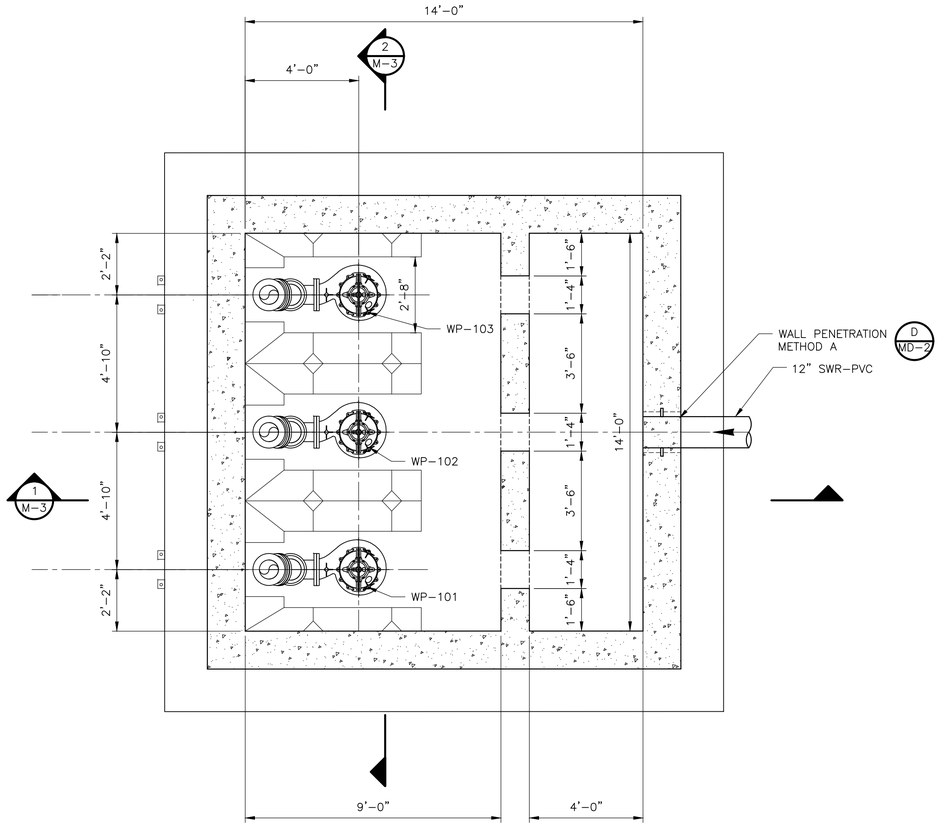

LOWER PLAN @ 797.00

PLAN

3/8" = 1'-0"

3/8" = 1'-0"

NOTE:

1. PROTECTIVE LINNING SHALL BE INSTALLED IN WET WELL. REFER TO STRUCTURAL SHEETS.

STATE OF TEXAS
GERALD S. FURRIER
129811
LICENSED
PROFESSIONAL ENGINEER
12/11/2023

REV. NO.	DATE	DRWN	CHKD	REMARKS

DESIGNED BY: M. TESFAI
DRAWN BY: T SRINIVASAN
SHEET CHK'D BY: M. MAHADEVAN
CROSS CHK'D BY: M. TESFAI
APPROVED BY: G. FURRIER
DATE: DECEMBER 2023

CDM Smith
8310-1 N Capital of Texas Hwy, Suite 250
Austin, TX 78731
Tel: (512) 346-1100
TBPELS Firm Registration No. F-3043

CITY OF GEORGETOWN, TEXAS

CEDAR BREAKS AND D B WOOD LIFT STATIONS

MECHANICAL
CEDAR BREAKS LIFT STATION
UPPER PLAN AND LOWER PLAN

PROJECT NO. 2048-272644
FILE NAME: M002LSPS.dwg

SHEET NO.
M-2

Plotted: 12/14/2023 8:45:26 PM

xREFs: [CDMS_2234_South lake to South fork_Border, MWP001LS, SWS001LS, SWP000LS, SWP001LS, EWP001ST] Images: []
Last saved by: MAHADEVANM, Time: 12/14/2023 7:55:57 PM
pw:\\cdmsmith-az02-pw.bentley.com:pw_pw1\20482\272644\04 Design Services NM_50%\05 Process Mechanical\10 BIM_CAD\DM002LSPS.dwg
© 2023 CDM SMITH ALL RIGHTS RESERVED
REUSE OF DOCUMENTS: THESE DOCUMENTS AND DESIGNS PROVIDED BY PROFESSIONAL SERVICE, INCORPORATED HEREIN, ARE THE PROPERTY OF CDM SMITH AND ARE NOT TO BE USED, IN WHOLE OR PART, FOR ANY OTHER PROJECT WITHOUT THE WRITTEN AUTHORIZATION OF CDM SMITH.

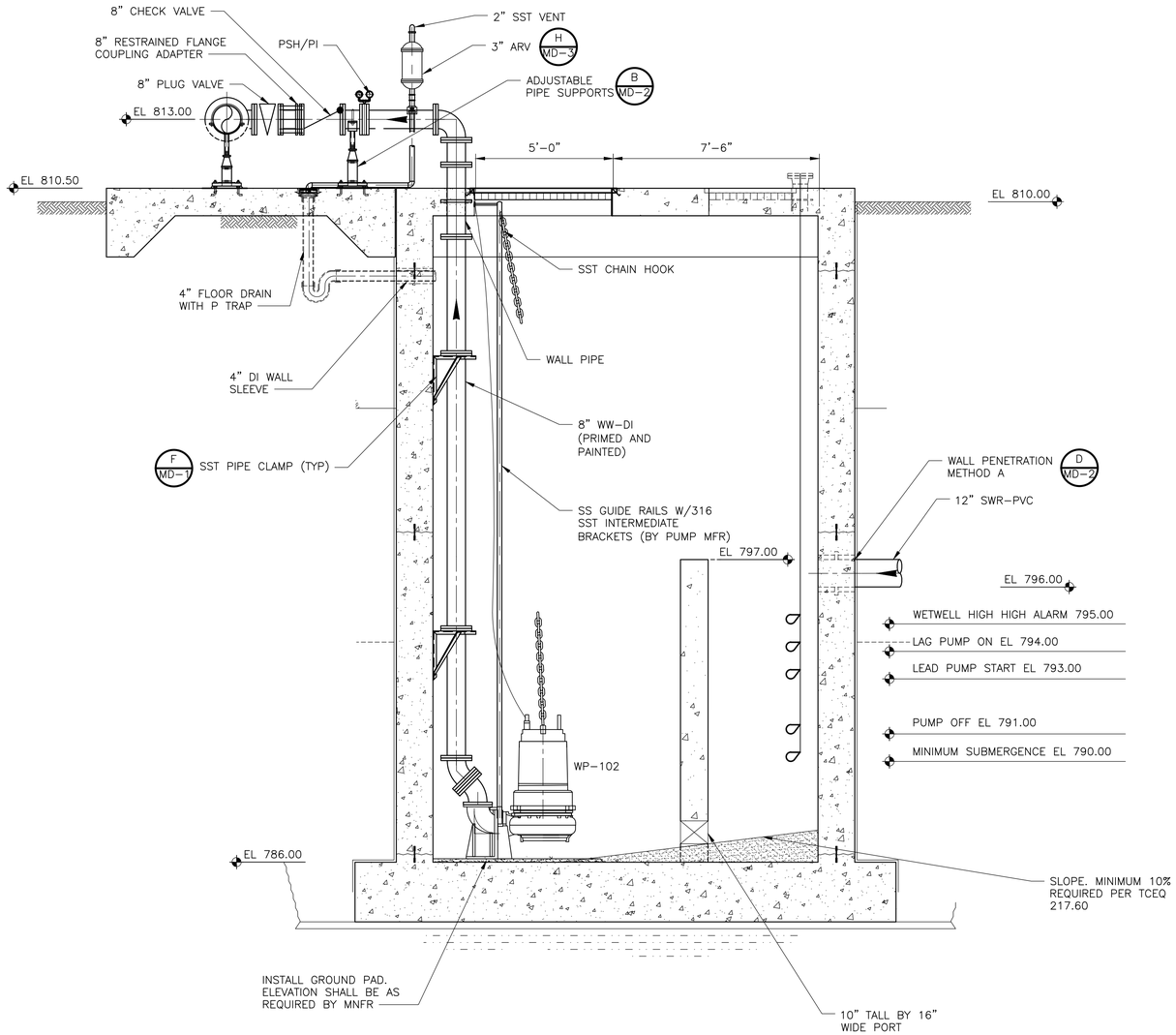

SECTION 1 / M-2
3/8" = 1'-0"

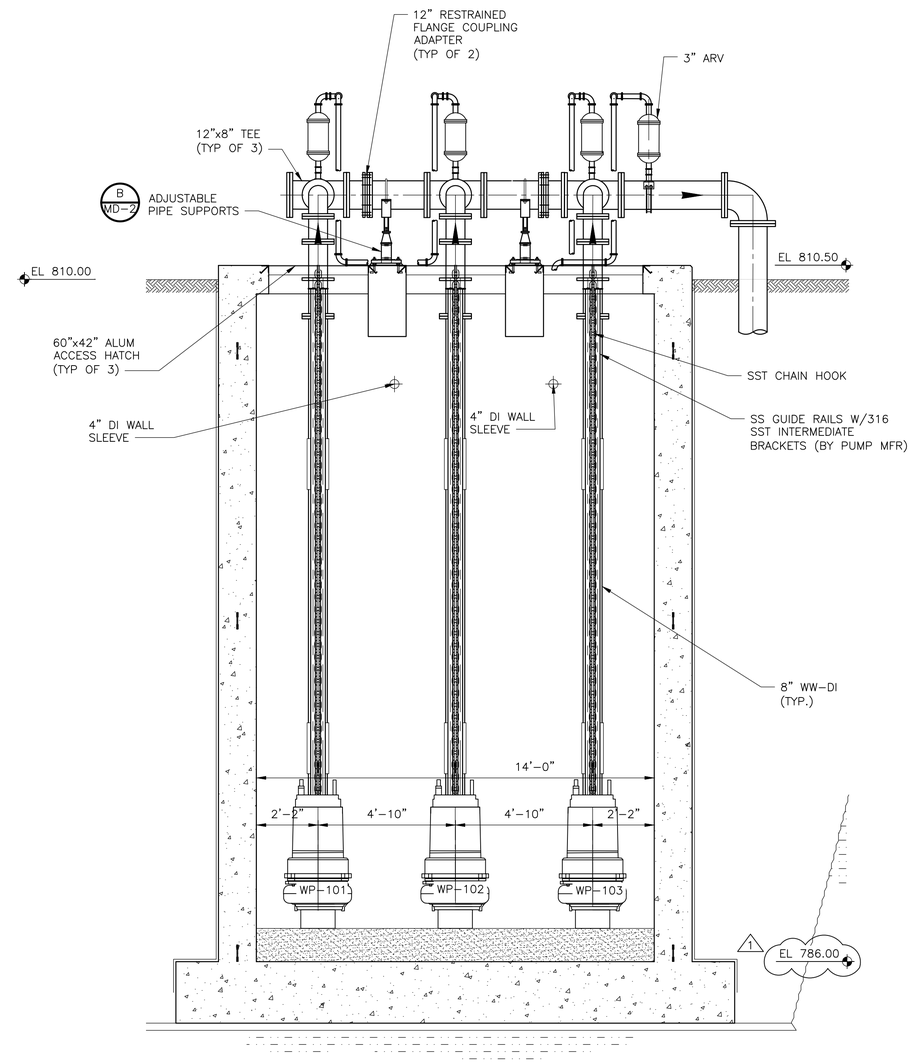

SECTION 2 / M-2
3/8" = 1'-0"

NOTE:

1. CONTRACTOR SHALL COORDINATE ATTACHMENT OF GUIDERAIL WITH THE HATCH DOOR (FLOOR DOOR) APPROVED SUBMITTAL AND THE HIGH-PERFORMANCE CONCRETE COATING SYSTEM. ENSURE THAT ATTACHMENT BOLTS ARE NO LESS THAN 3.5" FROM A CONCRETE EDGE AND THAT THE ANCHORS ARE PROPERLY SEALED PER COATING MANUFACTURER REQUIREMENTS. SUBMIT PROPOSED ATTACHMENT LOCATION AND METHOD TO ENGINEER FOR REVIEW PRIO TO FABRICATION AND PURCHASE OF ATTACHMENT.

3/8" = 1'- 0"
2 0 2 4

STATE OF TEXAS
GERALD S. FURRIER
129811
LICENSED PROFESSIONAL ENGINEER
12/11/2023

REV. NO.	DATE	DRWN	CHKD	REMARKS
1	1/9/24	MT	GF	REVISED ELEVATION.

DESIGNED BY: M. TESFAI
DRAWN BY: T SRINIVASAN
SHEET CHK'D BY: M. MAHADEVAN
CROSS CHK'D BY: M. TESFAI
APPROVED BY: G. FURRIER
DATE: DECEMBER 2023

CDM Smith
8310-1 N Capital of Texas Hwy, Suite 250
Austin, TX 78731
Tel: (512) 346-1100
TBPELS Firm Registration No. F-3043

CITY OF GEORGETOWN, TEXAS
CEDAR BREAKS AND D B WOOD LIFT STATIONS

MECHANICAL
CEDAR BREAKS LIFT STATION
SECTIONS

PROJECT NO. 2048-272644
FILE NAME: M003LSPS.dwg
SHEET NO.
M-3

XREFs: [CDMS_2234_South lake to South fork_Border, MWP001LS, SWP000LS, SWP001LS, SWS001LS] Images: []
Last saved by: MAHADEVANM Time: 12/14/2023 9:04:12 PM
pw:\\cdmsmith-az02-pw.bentley.com:pw_pl1\2048\272644\04 Design Services NM_50%\05 Process Mechanical\10 BIM_CADD\M003LSPS.dwg
© 2023 CDM SMITH ALL RIGHTS RESERVED.
REUSE OF DOCUMENTS: THESE DOCUMENTS AND DESIGNS PROVIDED BY PROFESSIONAL SERVICE, INCORPORATED HEREIN, ARE THE PROPERTY OF CDM SMITH AND ARE NOT TO BE USED, IN WHOLE OR PART, FOR ANY OTHER PROJECT WITHOUT THE WRITTEN AUTHORIZATION OF CDM SMITH.

Plotted: 4/26/2024 11:18:07 AM

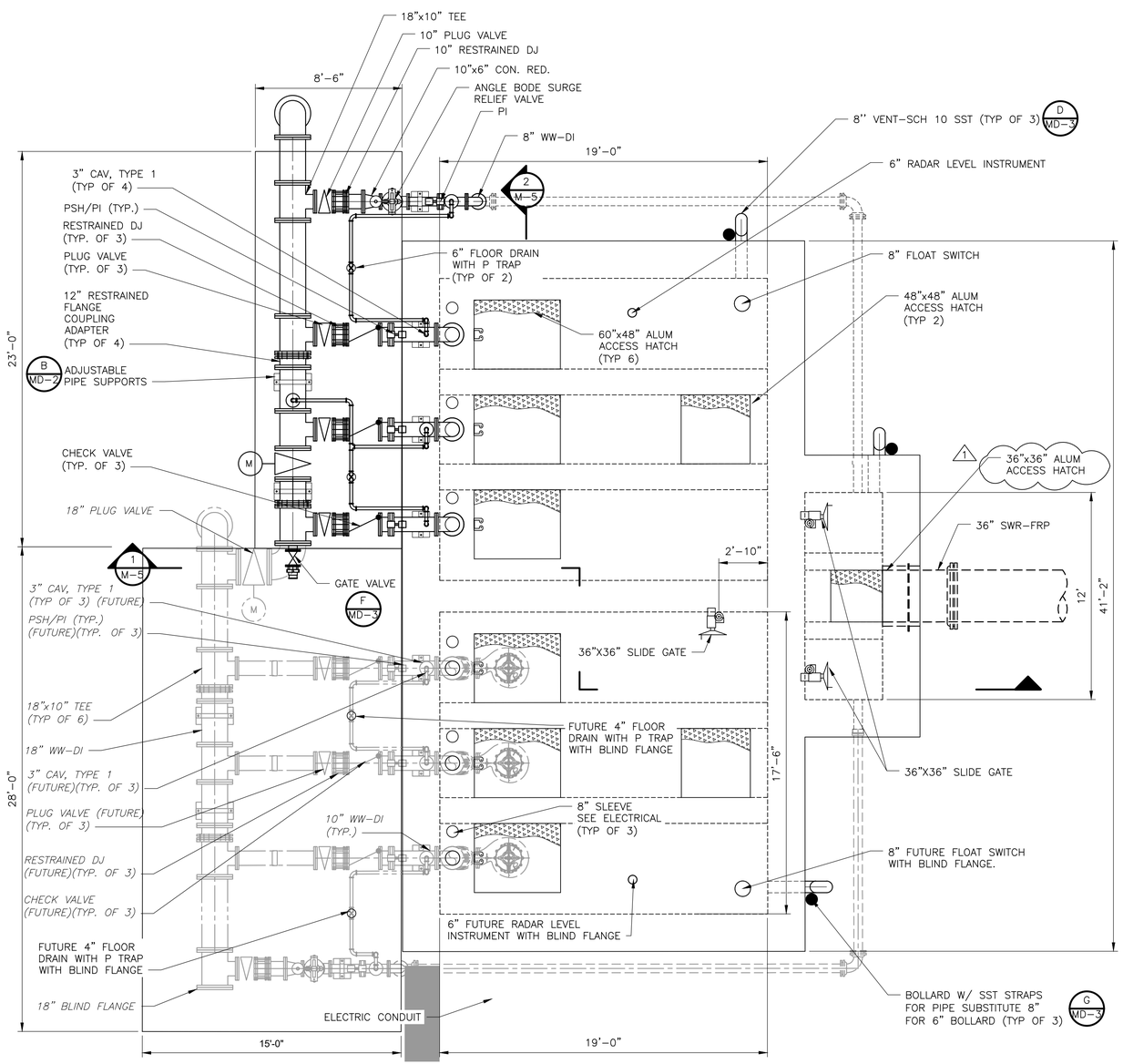

UPPER PLAN @ 767.50

PLAN

1/4" = 1'-0"

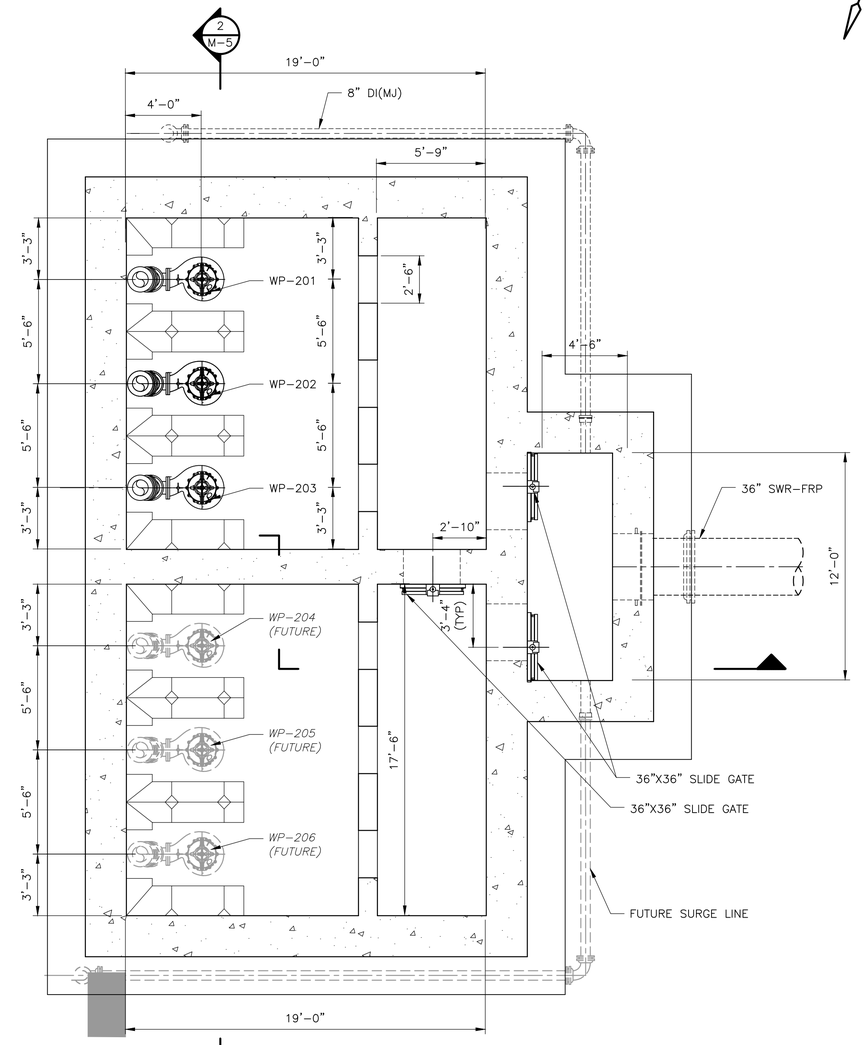

LOWER PLAN @ 742.00

PLAN

1/4" = 1'-0"

NOTE:

1. PROTECTIVE LINNING SHALL BE INSTALLED IN WET WELL. REFER TO STRUCTURAL SHEETS.

STATE OF TEXAS
GERALD S. FURRIER
129811
LICENSED PROFESSIONAL ENGINEER
12/11/2023

REV. NO.	DATE	DRWN	CHKD	REMARKS
1	1/9/24	MT	GF	REVISED ACCESS HATCH MATERIAL

DESIGNED BY: M. TESFAI
DRAWN BY: T SRINIVASAN
SHEET CHK'D BY: M. MAHADEVAN
CROSS CHK'D BY: M. TESFAI
APPROVED BY: G. FURRIER
DATE: DECEMBER 2023

CDM Smith
8310-1 N Capital of Texas Hwy, Suite 250
Austin, TX 78731
Tel: (512) 346-1100
TBPELS Firm Registration No. F-3043

CITY OF GEORGETOWN, TEXAS

CEDAR BREAKS AND D B WOOD LIFT STATIONS

MECHANICAL
D B WOOD LIFT STATION
UPPER PLAN AND LOWER PLAN

PROJECT NO. 2048-272644
FILE NAME: M004LSPL.dwg
SHEET NO.
M-4

Plotted: 4/26/2024 11:12:26 AM

XREFs: [CDMS_2234_South lake to South fork_Border; MWP002LS, SWS002LS, SWP004LS, SWP002LS, EWP002ST] Images: []
Last saved by LIZ2, Time: 12/14/2023 3:35:13 PM
C:\pw_pr\liz2cd\15\969\M004LSPL.dwg
© 2023 CDM SMITH ALL RIGHTS RESERVED.
REUSE OF DOCUMENTS: THESE DOCUMENTS AND DESIGNS PROVIDED BY PROFESSIONAL SERVICE, INCORPORATED HEREIN, ARE THE PROPERTY OF CDM SMITH AND ARE NOT TO BE USED, IN WHOLE OR PART, FOR ANY OTHER PROJECT WITHOUT THE WRITTEN AUTHORIZATION OF CDM SMITH.

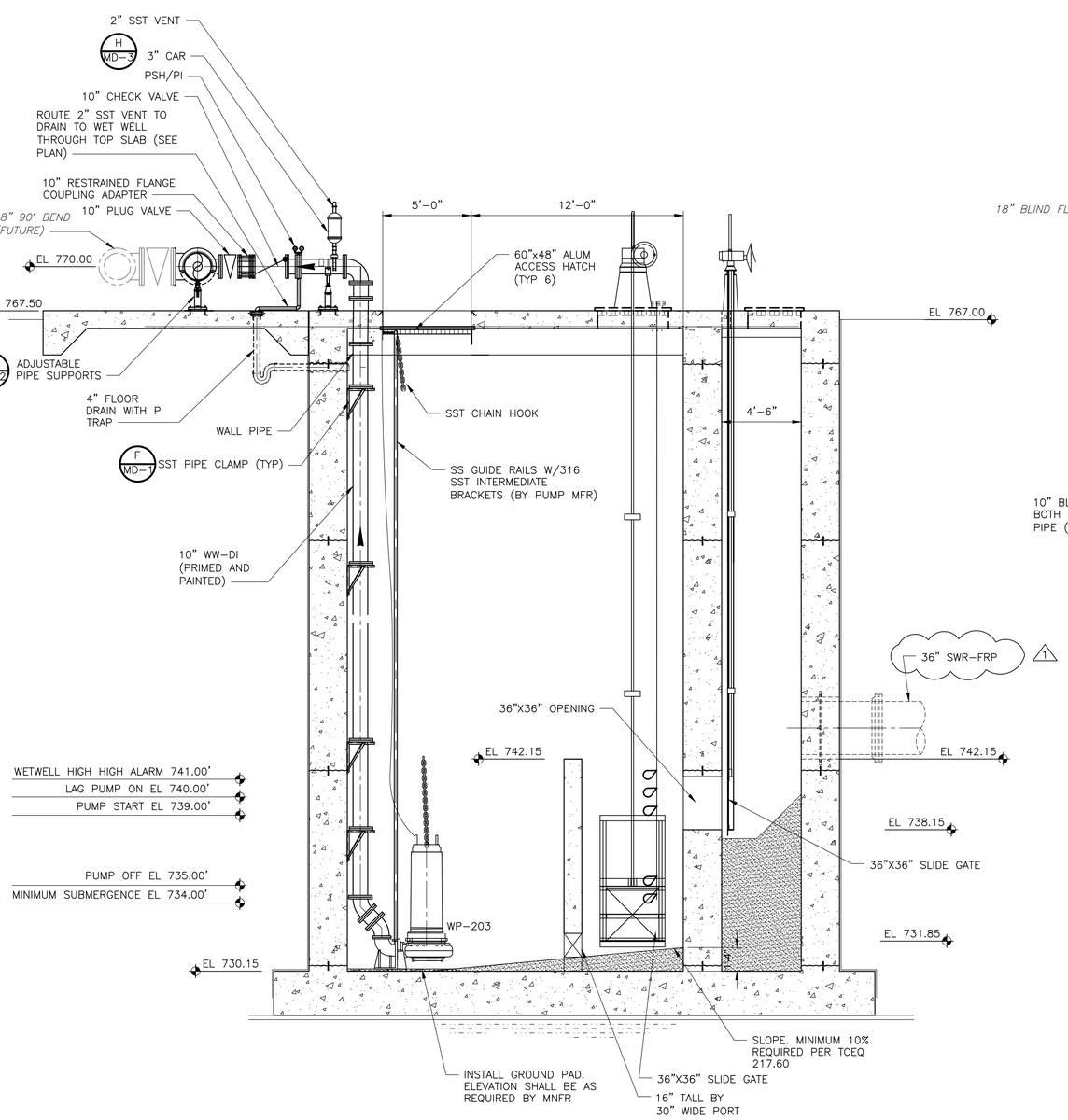

SECTION 1 / M-4
1/4" = 1'-0"

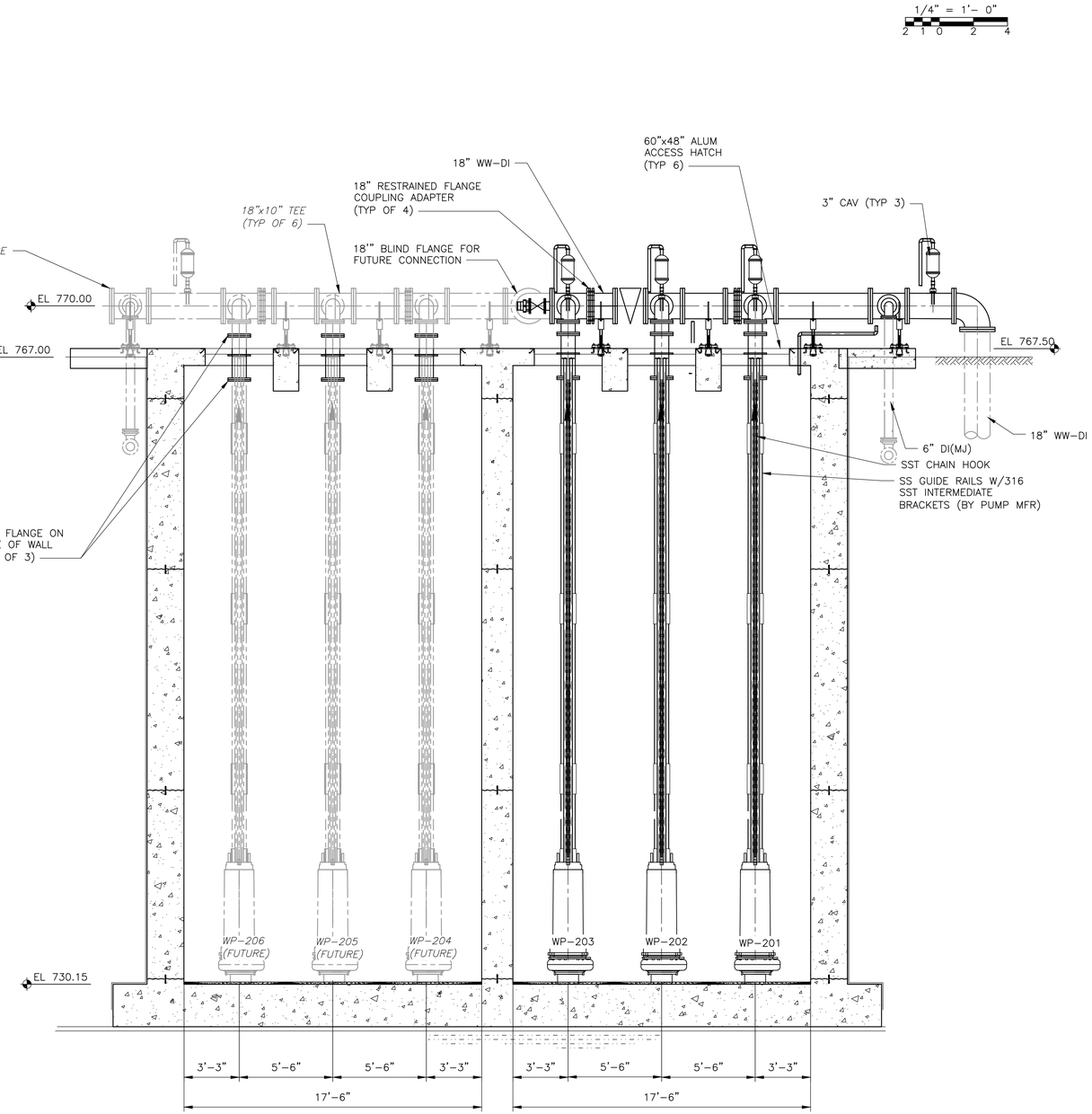

SECTION 2 / M-4
1/4" = 1'-0"

NOTES:

1. PROTECTIVE LINING SHALL BE INSTALLED IN WET WELL. REFER TO STRUCTURAL SHEETS.
2. CONTRACTOR SHALL COORDINATE ATTACHMENT OF GUIDERAIL WITH THE HATCH DOOR (FLOOR DOOR) APPROVED SUBMITTAL AND THE HIGH-PERFORMANCE CONCRETE COATING SYSTEM. ENSURE THAT ATTACHMENT BOLTS ARE NO LESS THAN 3.5" FROM A CONCRETE EDGE AND THAT THE ANCHORS ARE PROPERLY SEALED PER COATING MANUFACTURER REQUIREMENTS. SUBMIT PROPOSED ATTACHMENT LOCATION AND METHOD TO ENGINEER FOR REVIEW PRIO TO FABRICATION AND PURCHASE OF ATTACHMENT.

STATE OF TEXAS
GERALD S. FURRIER
129811
LICENSED PROFESSIONAL ENGINEER
12/11/2023

REV. NO.	DATE	DRWN	CHKD	REMARKS
1	1/9/24	MT	GF	REVISED PIPE MATERIAL

DESIGNED BY: M. TESFAI
DRAWN BY: T SRINIVASAN
SHEET CHK'D BY: M. MAHADEVAN
CROSS CHK'D BY: M. TESFAI
APPROVED BY: G. FURRIER
DATE: DECEMBER 2023

CDM Smith
8310-1 N Capital of Texas Hwy, Suite 250
Austin, TX 78731
Tel: (512) 346-1100
TBPELS Firm Registration No. F-3043

CITY OF GEORGETOWN, TEXAS
CEDAR BREAKS AND D B WOOD LIFT STATIONS

MECHANICAL
D B WOOD LIFT STATION
SECTIONS

PROJECT NO. 2048-272644
FILE NAME: M005LSSC.dwg
SHEET NO.
M-5

90% DESIGN - NOT FOR CONSTRUCTION

XREFs: [CDMS_2234_South_lake_to_South_fork_Border_PP, MWP002LS, SWP002LS, SWS002LS, SWP004LS] Images: []
Last saved by: KAJALEAN Time: 4/26/2024 11:02:57 AM
C:\pw_pl1\kajalean\d3151969\M005LSSC.dwg
© 2022 CDM SMITH ALL RIGHTS RESERVED.
REUSE OF DOCUMENTS: THESE DOCUMENTS AND DESIGNS PROVIDED BY PROFESSIONAL SERVICE, INCORPORATED HEREIN, ARE THE PROPERTY OF CDM SMITH AND ARE NOT TO BE USED, IN WHOLE OR PART, FOR ANY OTHER PROJECT WITHOUT THE WRITTEN AUTHORIZATION OF CDM SMITH.

Plotted: 4/26/2024 11:07:29 AM

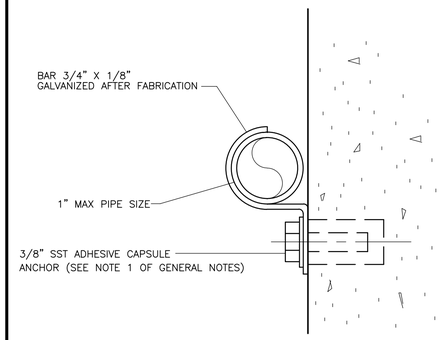

NOTES

1 WHERE SUBMERGED OR LOCATED ON OR ABOVE TOP OF WALL OF HYDRAULIC STRUCTURE, PIPE CLAMP, WASHER AND SHIELD SHALL BE TYPE 316 STAINLESS STEEL.

2 WHEN USED WITH PVC OR FIBERGLASS PIPE, PROVIDE STEEL SHIELD AROUND PIPE AT CLAMP WITH LOOSE FIT. WRAP COPPER TUBES WITH 2" WIDE STRIP OF RUBBER FABRIC.

3 WHERE SUBMERGED, STRAP, EXPANSION BOLT, NUT & WASHER SHALL BE TYPE 316 STAINLESS STEEL.

PIPE CLAMP FOR INDIVIDUAL PIPES

DETAIL A
NTS

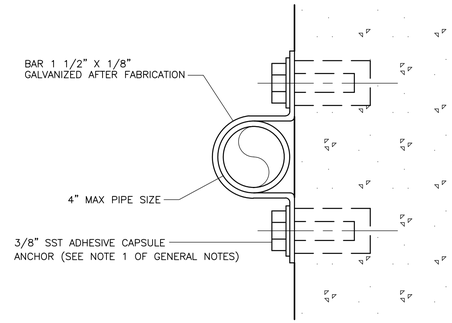

NOTES

1 WHERE SUBMERGED OR LOCATED ON OR ABOVE TOP OF WALL OF HYDRAULIC STRUCTURE, PIPE CLAMP, WASHER AND SHIELD SHALL BE TYPE 316 STAINLESS STEEL.

2 WHEN USED WITH PVC OR FIBERGLASS PIPE, PROVIDE STEEL SHIELD AROUND PIPE AT CLAMP WITH LOOSE FIT. WRAP COPPER TUBES WITH 2" WIDE STRIP OF RUBBER FABRIC.

PIPE CLAMP FOR INDIVIDUAL PIPES

DETAIL B
NTS

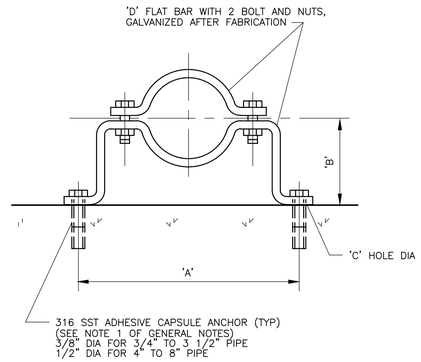

DIMENSIONS IN INCHES					
PIPE DIA	'A'	'B' SEE NOTE 3 BELOW	'C' HOLE DIA	'D' FLAT BAR SIZE	LOAD RATING LBS*
3/4	5 15/16	2 1/2	7/16	3/16 X 1 1/4	300
1	6 1/4	2 5/8	7/16	3/16 X 1 1/4	300
1 1/4	6 11/16	2 3/4	7/16	3/16 X 1 1/4	300
1 1/2	6 15/16	3	7/16	3/16 X 1 1/4	300
2	8 5/16	3 3/16	7/16	1/4 X 1 1/4	500
2 1/2	8 7/8	3 7/16	7/16	1/4 X 1 1/4	500
3	9 1/8	3 3/4	7/16	1/4 X 1 1/4	500
3 1/2	10 1/16	4	7/16	1/4 X 1 1/4	500
4	10 9/16	4 1/4	9/16	1/4 X 1 1/2	600
5	11 3/4	4 3/4	9/16	1/4 X 1 1/2	600
6	14 3/8	5 5/16	9/16	3/8 X 1 1/2	850
8	16 5/8	6 5/16	9/16	3/8 X 1 1/2	850

* SAFETY FACTOR OF 5

NOTES

1 WHERE SUBMERGED OR LOCATED ON OR ABOVE TOP OF WALL OF HYDRAULIC STRUCTURE, PIPE CLAMP, WASHER AND SHIELD SHALL BE TYPE 316 STAINLESS STEEL.

2 WHEN USED WITH PVC OR FIBERGLASS PIPE PROVIDE STEEL SHIELD AROUND PIPE AT CLAMP, WITH LOOSE FIT. WRAP COPPER TUBES WITH 2" STRIP OF RUBBER FABRIC.

3 FOR FLANGED PIPING INCREASE 'B' DIMENSION AS REQUIRED.

PIPE CLAMP FOR INDIVIDUAL PIPES

DETAIL C
NTS

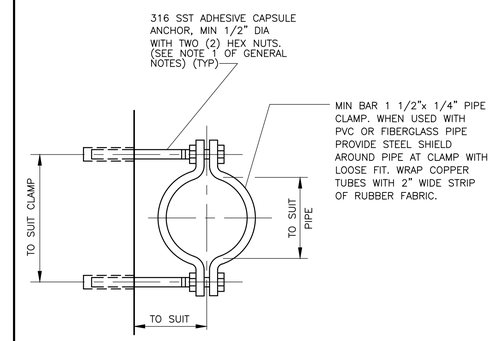

NOTE

1 GALVANIZE ALL PARTS AFTER FABRICATION. WHERE SUBMERGED OR LOCATED ON OR ABOVE TOP OF WALL OF HYDRAULIC STRUCTURE, PIPE CLAMP, WASHER AND SHIELD SHALL BE TYPE 316 STAINLESS STEEL.

PIPE CLAMP FOR INDIVIDUAL PIPES

DETAIL D
NTS

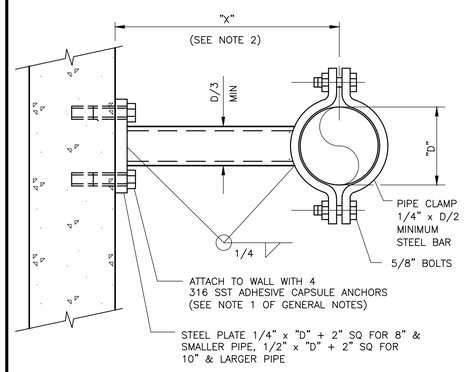

PLAN

NOTES

1 SWAY BRACE SHALL NOT SUPPORT VERTICAL LOADS.

2 FOR USE WHEN "X" IS GREATER THAN 12". FOR "X" 12" OR LESS, USE DETAIL AD OR AS OTHERWISE NOTED.

3 SWAY BRACES SHALL BE HOT DIP GALVANIZED AFTER FABRICATION. WHERE SUBMERGED OR LOCATED ON OR ABOVE TOP OF WALL OF HYDRAULIC STRUCTURE, PIPE SWAY BRACE ASSEMBLY SHALL BE TYPE 316 STAINLESS STEEL.

VERTICAL PIPE SWAY BRACE

DETAIL E
NTS

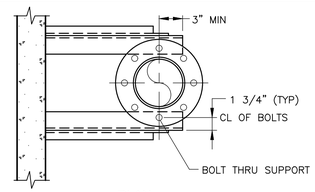

PLAN

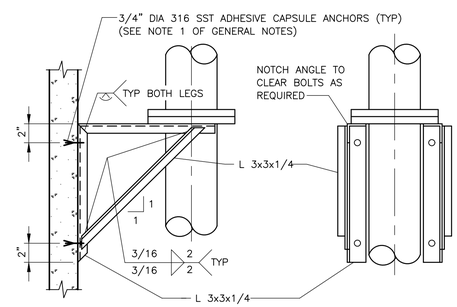

SECTION ELEVATION

NOTES

1 FOR 4" AND LARGER PIPE.

2 SUPPORT SHALL BE 316 STAINLESS STEEL. WHERE SUBMERGED OR LOCATED OVER WATER, PIPE BRACKET ASSEMBLY & BOLTS SHALL BE 316 SST.

3 MAXIMUM VERTICAL LOAD EQUALS 900 POUNDS.

4 FOR PIPE WITH JOINT TYPE OTHER THAN FLANGED, WELD SINGLE SLIP-ON TYPE FLANGE TO PIPE AT LOCATION OF EACH SUPPORT.

5 PIPE BRACKET ASSEMBLY & BOLTS SHALL BE TYPE 316 SST WHEN USED FOR SUPPORT OF SST PIPING.

PIPE SUPPORT

DETAIL F
NTS

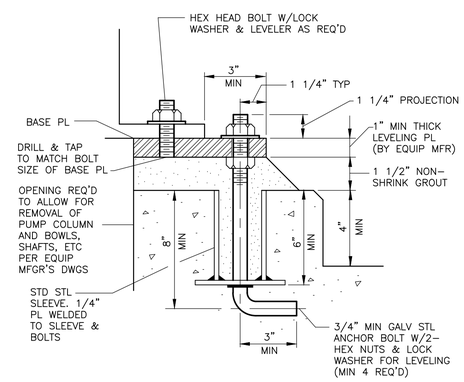

EQUIPMENT MOUNTING BASE

DETAIL G
NTS

GENERAL NOTES (TYPICAL FOR ALL STANDARD MECHANICAL DETAIL SHTS)

1. STAINLESS STEEL ADHESIVE CAPSULE ANCHORS SHALL BE A TWO-PART STUD AND CAPSULE RESIN ANCHORING SYSTEM. CAPSULES SHALL BE SELF-CONTAINED. SEALED GLASS UNITS CONTAINING PREMEASURED AMOUNTS OF RESIN, AGGREGATES, AND HARDENER. STUD ASSEMBLIES SHALL BE ALL-THREAD ANCHOR ROD WITH NUT AND WASHER. INSTALL ANCHOR IN FULL COMPLIANCE WITH THE MANUFACTURERS' RECOMMENDATIONS. ANCHORS SHALL BE HILTI "HVA ADHESIVE ANCHOR", MOLLY "PARABOUND CAPSULE ANCHOR", OR EQUAL. PROVIDE MINIMUM EMBEDMENT OF 10 BOLT DIAMETERS IN CONC.

2. ALL PIPE FRAMING SUPPORTS, PIPE CLAMPS, INTERMEDIATE SUPPORTS, POST SUPPORTS, Z FITTINGS, PIPE SHIELDS, ETC FOR CHEMICAL FEED SYSTEMS LOCATED ON OR ADJACENT TO CHEMICAL EQUIPMENT PADS OR LOCATED IN CHEMICAL PIPE TRENCHES, SUMPS, OR SECONDARY CONTAINMENT STRUCTURES SHALL BE CONSTRUCTED OF MATERIALS THAT ARE COMPATIBLE WITH PROCESS FLUID.

REV. NO.	DATE	DRWN	CHKD	REMARKS

DESIGNED BY: M. TESFAI
DRAWN BY: D. SNEHA
SHEET CHK'D BY: M. MAHADEVAN
CROSS CHK'D BY: M. TESFAI
APPROVED BY: G. FURRIER
DATE: DECEMBER 2023

CDM Smith
8310-1 N Capital of Texas Hwy, Suite 250
Austin, TX 78731
Tel: (512) 346-1100
TBPELS Firm Registration No. F-3043

CITY OF GEORGETOWN, TEXAS

CEDAR BREAKS AND D B WOOD LIFT STATIONS

MECHANICAL STANDARD DETAILS I

PROJECT NO. 2048-272644
FILE NAME: MZ-1
SHEET NO.
MD-1

XREFs: [CDMS_2234_South lake to South fork_Border] Images: []
Last saved by: RAAJITHV Time: 11/1/2023 5:48:06 PM
pw:\\cdmsmith-az02-pw.bentley.com:pw_pw1\204827\264\04 Design Services NM_50%\05 Process Mechanical\10 BIM_CADD\02 Details\M001STDT.dwg
© 2023 CDM SMITH ALL RIGHTS RESERVED.
REUSE OF DOCUMENTS: THESE DOCUMENTS AND DESIGNS PROVIDED BY PROFESSIONAL SERVICE, INCORPORATED HEREIN, ARE THE PROPERTY OF CDM SMITH AND ARE NOT TO BE USED, IN WHOLE OR PART, FOR ANY OTHER PROJECT WITHOUT THE WRITTEN AUTHORIZATION OF CDM SMITH.
Plotted: 12/13/2023 8:30:07 PM

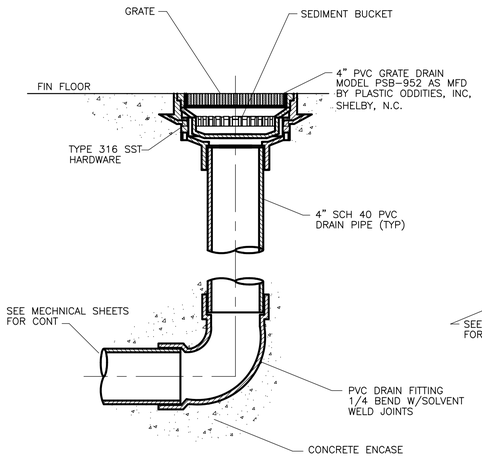

FLOOR DRAIN WITHOUT P-TRAP

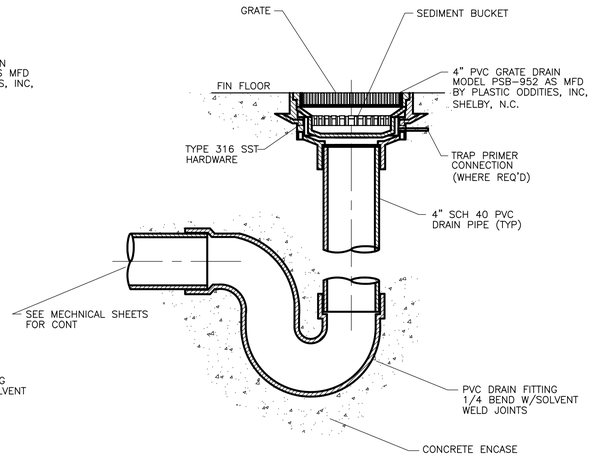

FLOOR DRAIN WITH P-TRAP

NOTES

1 PROVIDE FLOOR DRAIN W/P-TRAP ONLY WHERE REQUIRED ON DRAWINGS.

2 ALL PIPE AND FITTING CONNECTIONS SHALL BE SOLVENT WELDED IN ACCORDANCE WITH SECTION 15064.

DETAIL A
NTS

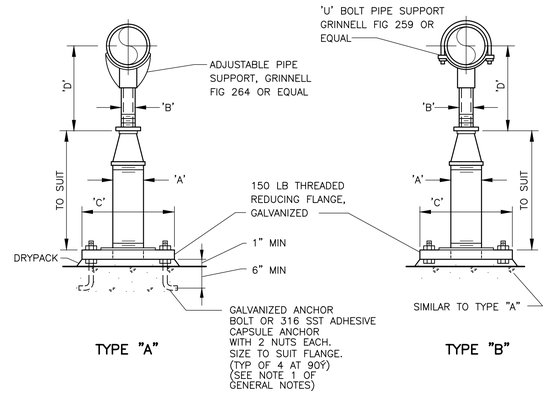

TYPE "A" TYPE "B"

ADJUSTABLE PIPE SUPPORT

DETAIL B
NTS

ADJUSTABLE PIPE SUPPORT APPROX DIMENSIONS IN INCHES					
PIPE SIZE	A	B	C	D MIN	D MAX
2 1/2	2 1/2	1 1/2	9	8	11 1/2
3	2 1/2	1 1/2	9	8 1/4	11 3/4
3 /12	2 1/2	1 1/2	9	8 1/2	12
4	3	2 1/2	9	10 1/4	14
6	3	2 1/2	9	11 5/8	15 1/4
8	3	2 1/2	9	13 5/8	16 1/2
10	3	2 1/2	9	14 5/8	18 1/4
12	3	2 1/2	9	15 5/8	19 3/4
14	4	3	11	18 7/8	20 3/4
16	4	3	11	19 7/8	22 1/4
18	6	3 1/2	13 1/2	21 1/4	24
20	6	3 1/2	13 1/2	23 1/4	25 1/2
24	6	4	13 1/2	26 1/2	28 1/4
30	6	4	13 1/2	29 5/8	31 1/2
32	6	4	13 1/2	30 5/8	32 3/4
36	6	4	13 1/2	32 5/8	34 3/4

NOTE

1 UNDER VALVES, METERS OR OTHER SPECIAL APPURTENANCES, A FABRICATED SUPPORT PIECE MAY BE UTILIZED AS ACCEPTABLE TO ENGINEER.

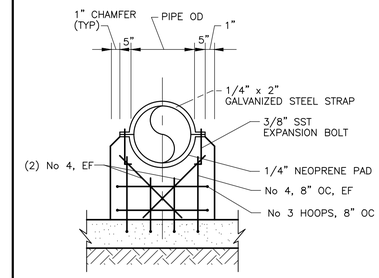

CONCRETE PIPE SUPPORT REACTION TYPE

DETAIL C
NTS

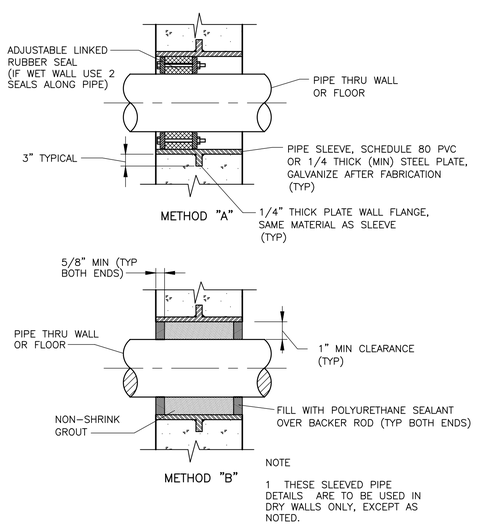

NOTE

1 THESE SLEEVED PIPE DETAILS ARE TO BE USED IN DRY WALLS ONLY, EXCEPT AS NOTED.

WALL PENETRATION IN NEW WALL

DETAIL D
NTS

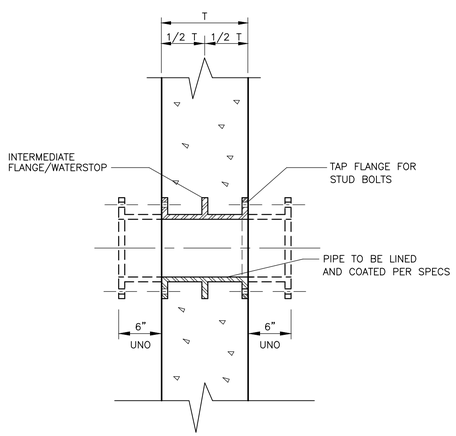

DI FxFxF WALL PIPE IN NEW WALL

DETAIL E
NTS

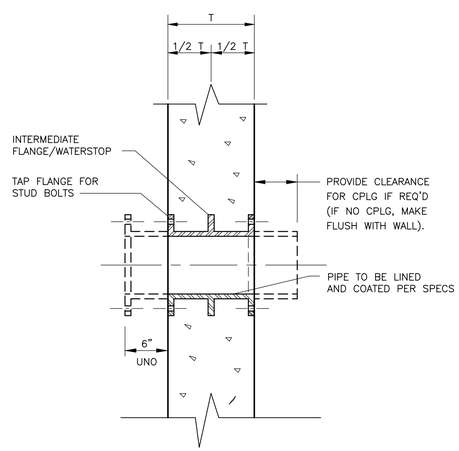

DI FxFxPE WALL PIPE IN NEW WALL

DETAIL F
NTS

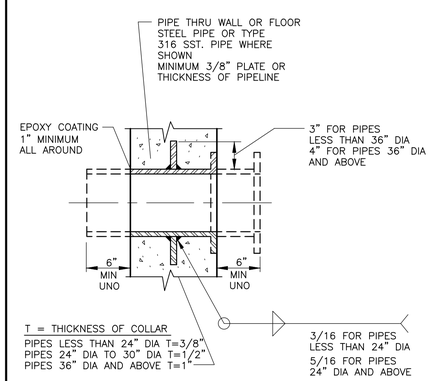

STEEL FLANGE X PLAIN END WALL PIPE

DETAIL G
NTS

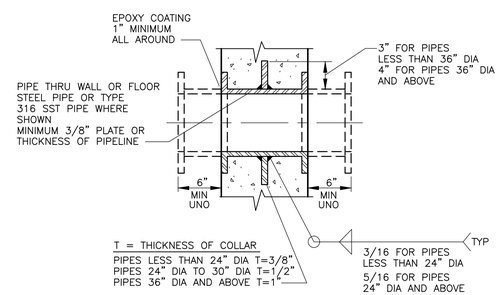

STEEL F X F X F WALL PIPE

DETAIL H
NTS

STATE OF TEXAS
GERALD S. FURRIER
129811
LICENSED
PROFESSIONAL ENGINEER
12/11/2023

REV. NO.	DATE	DRWN	CHKD	REMARKS

DESIGNED BY: M. TESFAI
DRAWN BY: D. SNEHA
SHEET CHK'D BY: M. MAHADEVAN
CROSS CHK'D BY: M. TESFAI
APPROVED BY: G. FURRIER
DATE: DECEMBER 2023

CDM Smith
8310-1 N Capital of Texas Hwy, Suite 250
Austin, TX 78731
Tel: (512) 346-1100
TBPELS Firm Registration No. F-3043

CITY OF GEORGETOWN, TEXAS

CEDAR BREAKS AND D B WOOD LIFT STATIONS

MECHANICAL STANDARD DETAILS II

PROJECT NO. 2048-272644
FILE NAME: MZ-2
SHEET NO.
MD-2

XREFs: [CDMS_2234_South lake to South fork_Border] Images: []
Last saved by: RAAUTHV Time: 11/1/2023 5:48:15 PM
pw:\\cdmsmith-wa02-pw.bentley.com:pw_pt1\204872\272644\04 Design Services NM_50%\05 Process Mechanical\10 BIM_CADD\02 Details\M002STDT.dwg
© 2023 CDM SMITH ALL RIGHTS RESERVED
REUSE OF DOCUMENTS: THESE DOCUMENTS AND DESIGNS PROVIDED BY PROFESSIONAL SERVICE, INCORPORATED HEREIN, ARE THE PROPERTY OF CDM SMITH AND ARE NOT TO BE USED, IN WHOLE OR PART, FOR ANY OTHER PROJECT WITHOUT THE WRITTEN AUTHORIZATION OF CDM SMITH.
Plotted: 12/13/2023 6:30:56 PM

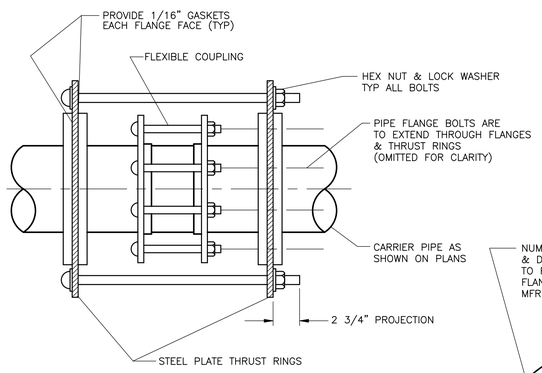

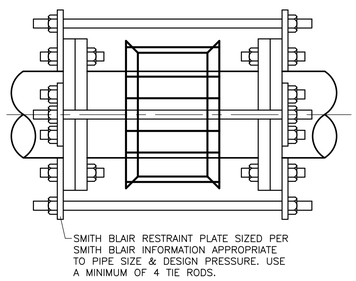

FOR 12" DIAMETER PIPE & LARGER

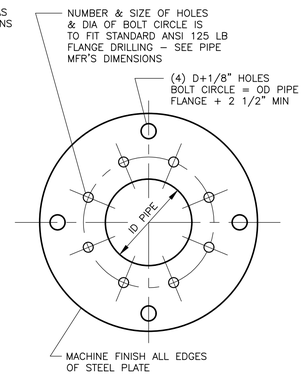

NOTES

1 FOR PIPE 6" DIA & SMALLER, USE (2) 3/4" DIA TIE RODS MIN.

2 FOR PIPE 8" DIA & LARGER, USE (4) 1" DIA TIE RODS MIN.

THRUST HARNESS FOR FLEXIBLE COUPLING

DETAIL A
NTS

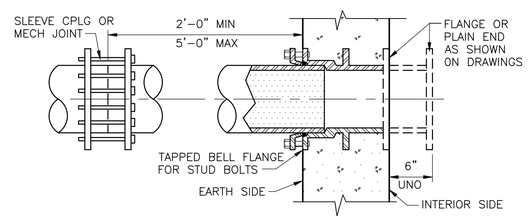

DI MJ WALL PIPE IN NEW WALL

DETAIL B
NTS

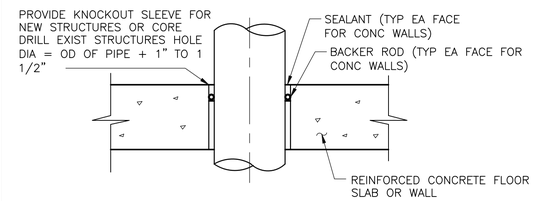

NOTE

1 IN CMU WALLS, UNITS TO BE PENETRATED SHALL BE MORTAR–FILLED TO MIN 12" AROUND PIPE PENETRATION.

PIPE THROUGH FLOOR PENETRATION

DETAIL C
NTS

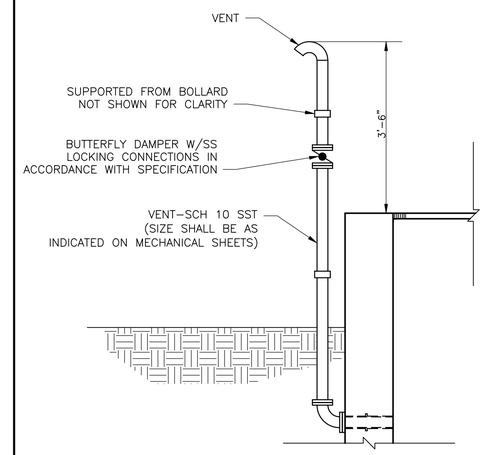

VENT PIPE

DETAIL D
NTS

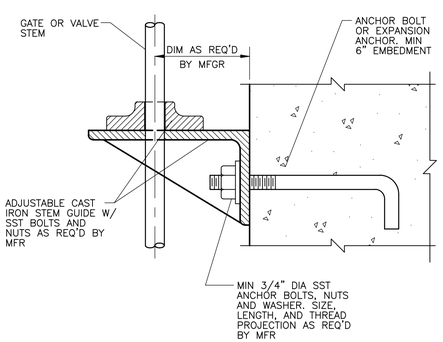

VALVE OR GATE STEM GUIDE

DETAIL E
NTS

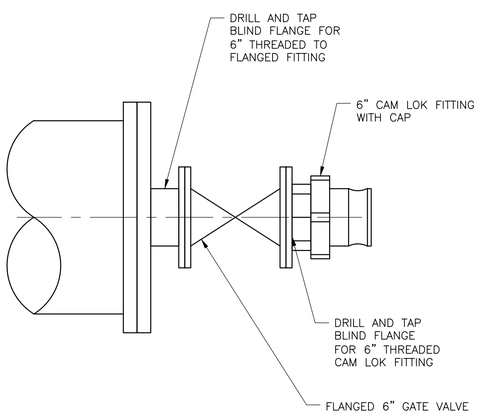

TAPPED FLANGE CONNECTION

DETAIL F
NTS

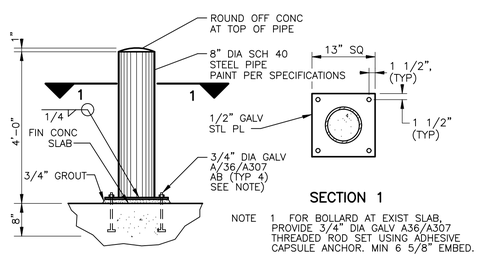

NOTE 1 FOR BOLLARD AT EXIST SLAB, PROVIDE 3/4" DIA GALV A36/A307 THREADED ROD SET USING ADHESIVE CAPSULE ANCHOR. MIN 6 5/8" EMBED.

BOLLARD

DETAIL G
NTS

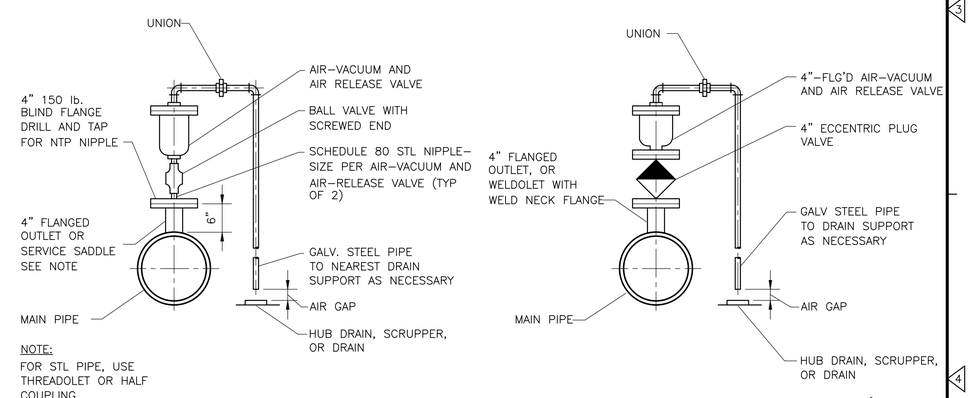

AIR RELEASE AND VACUUM

DETAIL H
NTS

STATE OF TEXAS
GERALD S. FURRIER
129811
LICENSED
PROFESSIONAL ENGINEER
12/11/2023

REV. NO.	DATE	DRWN	CHKD	REMARKS

DESIGNED BY: M. TESFAI
DRAWN BY: D. SNEHA
SHEET CHK'D BY: M. MAHADEVAN
CROSS CHK'D BY: M. TESFAI
APPROVED BY: G. FURRIER
DATE: DECEMBER 2023

CDM Smith
8310-1 N Capital of Texas Hwy, Suite 250
Austin, TX 78731
Tel: (512) 346-1100
TBPELS Firm Registration No. F-3043

CITY OF GEORGETOWN, TEXAS

CEDAR BREAKS AND D B WOOD LIFT STATIONS

MECHANICAL STANDARD DETAILS III

PROJECT NO. 2048–272644
FILE NAME: MZ–3

SHEET NO.
MD-3

XREFs: [CDMS_2234_South lake to South fork_Border] Images: []
Last saved by: RANJITHV Time: 11/1/2023 5:46:46 PM
pw:\\cdmsmith-ecd2-pw.bentley.com:pw_pw1\2048\272644\04 Design Services NM_50%\05 Process Mechanical\10 BIM_CADD\02 Details\M003STDT.dwg
© 2023 CDM SMITH ALL RIGHTS RESERVED.
REUSE OF DOCUMENTS: THESE DOCUMENTS AND DESIGNS PROVIDED BY PROFESSIONAL SERVICE, INCORPORATED HEREIN, ARE THE PROPERTY OF CDM SMITH. AND ARE NOT TO BE USED, IN WHOLE OR PART, FOR ANY OTHER PROJECT WITHOUT THE WRITTEN AUTHORIZATION OF CDM SMITH.
Plotted: 12/13/2023 8:30:27 PM

ONE LINE OR CONTROL DIAGRAM	PLAN	DESCRIPTION
52 CS	—	MEDIUM VOLTAGE DRAWOUT TYPE POWER CIRCUIT BREAKER CS=CONTROL SWITCH
FRAME TRIP	CB	LOW VOLTAGE AIR OR MOLDED CASE CIRCUIT BREAKER, 3 POLE UNLESS OTHERWISE NOTED.
SIZE # AMPS TYPE *		COMBINATION MOTOR CIRCUIT PROTECTOR AND MAGNETIC MOTOR STARTER, FULL VOLTAGE NON-REVERSING UNLESS OTHERWISE NOTED: * FVR – FULL VOLTAGE REVERSING RVNR – REDUCED VOLTAGE NON-REVERSING RVAT – REDUCED VOLTAGE AUTOTRANSFORMER RVSS – REDUCED VOLTAGE SOLID STATE 2S1W – TWO SPEED, ONE WINDING 2S2W – TWO SPEED, TWO WINDING (DIAGRAMMATICALLY SHOWN, CONTRACTOR SHALL FIELD LOCATE)
*		NON-FUSIBLE DISCONNECT SWITCH, 600 VOLT, 3 POLE * AMPERE RATING NOTED IF OTHER THAN 30A (DIAGRAMMATICALLY SHOWN, CONTRACTOR SHALL FIELD LOCATE)
* *	F	FUSIBLE DISCONNECT SWITCH, 600 VOLT, 3 POLE, * AMPERE RATING AND FUSE SIZE AS NOTED * AMPERE RATING NOTED IF OTHER THAN 30A FUSE RATING (DIAGRAMMATICALLY SHOWN, CONTRACTOR SHALL FIELD LOCATE)
	P 2	MANUAL MOTOR STARTER WITH THERMAL OVERLOAD HEATER, 1 POLE UNLESS OTHERWISE NOTED "P" INDICATES WITH PILOT LIGHT "2" INDICATES TWO POLE (DIAGRAMMATICALLY SHOWN, CONTRACTOR SHALL FIELD LOCATE)
	—	DRAWOUT TYPE EQUIPMENT OR DEVICE
	—	MEDIUM VOLTAGE CABLE TERMINATION
	—	MEDIUM VOLTAGE AIR INTERRUPTER SWITCH
*	—	MEDIUM VOLTAGE FUSED AIR INTERRUPTER SWITCH * FUSE RATING
	—	MEDIUM VOLTAGE FUSED MOTOR CONTROLLER
XFMR NO. 1 480V KVA 120/208V 3P, 4W	T	TRANSFORMER, RATINGS AND CONNECTIONS AS NOTED. UNLESS OTHERWISE NOTED ON THE SINGLE LINE DIAGRAMS, ALL DRY TYPE TRANSFORMERS SERVICING ADMINISTRATIVE AND LABORATORY SPACES SHALL HAVE A K FACTOR OF 4. ISOLATION TRANSFORMERS SHALL HAVE A K-20 RATING
* A TO 5	—	CURRENT TRANSFORMER * QUANTITY A = PRIMARY AMPERES
* V TO 120	—	POTENTIAL TRANSFORMER * QUANTITY V = PRIMARY VOLTAGE
	G	GENERATOR, RATINGS AND CONNECTIONS AS NOTED
ATS N S 100A	—	AUTOMATIC OR MANUAL TRANSFER SWITCH NO.1 (ATS-1), (MTS-1) "N" INDICATES NORMAL OR PREFERRED SOURCE "S" INDICATES STANDBY OR ALTERNATE SOURCE 100A INDICATES CONTINUOUS CURRENT RATING
*	*	VARIABLE SPEED DRIVE CONTROLLER * D.C. = D.C. DRIVE CONTROLLER SCR = SILICON CONTROLLED RECTIFIER VFD = VARIABLE FREQUENCY DRIVE
#KW	E	UNIT HEATER – ELECTRIC HEATING COIL AND FAN # – RATING
—	U	UNIT HEATER – GAS FIRED, STEAM OR WATER HEATING COIL AND FAN
5	M	MOTOR, NUMERAL INDICATES HORSEPOWER
VS VM *	—	VOLTMETER WITH SWITCH, 3 PHASE
AS AM *	—	AMMETER WITH SWITCH, 3 PHASE

ONE LINE OR CONTROL DIAGRAM	PLAN	DESCRIPTION
*	—	METER * WM – WATTMETER WHM – WATTHOUR METER WHDM – WATTHOUR DEMAND METER WHDR – WATTHOUR DEMAND RECORDER PF – POWER FACTOR METER DMU – DIGITAL METERING UNIT TRANSDUCER AX – CURRENT TRANSDUCER WX – WATT TRANSDUCER WHX – WATTHOUR TRANSDUCER
*	*	RELAY, NO. AS INDICATED 25 – SYNCHRONISM CHECK RELAY 27 – UNDERVOLTAGE RELAY 32 – DIRECTIONAL POWER RELAY 38 – BEARING PROTECTIVE DEVICE 40 – LOSS OF EXCITATION RELAY 42 – RUNNING CONTACTOR/PILOT RELAY 46 – REVERSE PHASE/PHASE BALANCE/CURRENT RELAY 47 – PHASE SEQUENCE VOLTAGE RELAY 49 – MACHINE OR TRANSFORMER THERMAL RELAY 50/51 – INSTANTANEOUS/TIME OVERCURRENT RELAY 50G – INSTANTANEOUS GROUND 51 – TIME OVERCURRENT RELAY 51G – TIME OVERCURRENT RELAY, GROUNDING RESISTOR TYPE 51N – TIME OVERCURRENT RELAY, RESIDUAL TYPE 51V – TIME OVERCURRENT RELAY WITH VOLTAGE RESTRAINT 51X – AUXILIARY RELAY (TRIPS CB AND ALARMS) 59 – OVERVOLTAGE RELAY 60 – NEGATIVE SEQUENCE VOLTAGE RELAY 62 – TIME DELAY RELAY 63 – OVERPRESSURE RELAY 64 – GENERATOR FIELD GROUND RELAY 67 – AC DIRECTIONAL OVERCURRENT RELAY 74 – ALARM LATCHING RELAY 83 – AUTOMATIC SELECTIVE CONTROL OR TRANSFER RELAY 86 – LOCKING-OUT RELAY 87 – DIFFERENTIAL PROTECTIVE RELAY B – SUFFIX INDICATES "BUS" G – SUFFIX INDICATES "GENERATOR" GF – GROUND FAULT ST – SHUNT TRIP T – SUFFIX INDICATES "TRANSFORMER" X – SUFFIX INDICATES "AUXILIARY"
*	—	SPECIAL CAPACITOR * SC – SURGE CAPACITOR PF – POWER FACTOR CORRECTION CAPACITOR
*	—	TUNED POWER FACTOR CORRECTION CAPACITOR
	—	PUSHBUTTON, MOMENTARY CONTACT, SPRING RETURN, NORMALLY CLOSED
	—	PUSHBUTTON, MOMENTARY CONTACT, SPRING RETURN, NORMALLY OPEN
	ES	EMERGENCY STOP PUSHBUTTON WITH RED MUSHROOM HEAD OPERATOR (MAINTAINED CONTACT)
STOP START	PBL	START-STOP PUSHBUTTON CONTROL STATION (MOMENTARY CONTACT) WITH LOCKOUT DEVICE ON STOP
	PBM	START-STOP PUSHBUTTON CONTROL STATION, MAINTAINED CONTACT WITH LOCKOUT DEVICE ON STOP
OFF ON	S/S	OFF/ON SELECTOR SWITCH
L R (XO) (OX)	LR	LOCAL/REMOTE SELECTOR SWITCH
A B C* (XOO) (OXO) (OOX)	*	3 POSITION SELECTOR SWITCH, MAINTAINED CONTACT O-OPEN X-CLOSED POSITION / TOP CONTACT / MIDDLE CONTACT / BOTTOM CONTACT A / X / O / O B / O / X / O C / O / O / X NAMEPLATE (A/B/C) HOA – HAND/OFF/AUTO HOR – HAND/OFF/REMOTE LOR – LOCAL/OFF/REMOTE RSL – RAISE/STOP/LOWER TOA – TEST/OFF/AUTO

GD/VF #	GD/VF #	GAS DETECTOR / VENTILATION FAILURE ALARM
		# INDICATES TYPE OF UNIT
		1=MASTER, 2=REMOTE

42 #	—	MOTOR STARTER COIL, NUMBER AS INDICATED TO DENOTE INTERLOCKING ONLY
CR #	—	CONTROL RELAY COIL, NUMBER AS INDICATED

ONE LINE OR CONTROL DIAGRAM	PLAN	DESCRIPTION
*	—	PILOT LIGHT, COLOR AS NOTED * R – RED G – GREEN B – BLUE W – WHITE A – AMBER
*	—	PILOT LIGHT, PUSH-TO-TEST TYPE, COLOR AS NOTED ABOVE.
* # RANGE SETPOINT * NOTC NCTO NOTO NCTC		TIME DELAY RELAY RANGE AS NOTED SETPOINT AS NOTED # NUMBER AS INDICATED * TDE – TIME DELAY AFTER ENERGIZATION ON DELAY TDD – TIME DELAY AFTER DE-ENERGIZATION OFF DELAY NOTC– NORMALLY OPEN, TIMED CLOSING WHEN ENERGIZED NCTO– NORMALLY CLOSED, TIMED OPENING WHEN ENERGIZED NOTO– NORMALLY OPEN, TIMED OPENING WHEN DE-ENERGIZED NCTC– NORMALLY CLOSED, TIMED CLOSING WHEN DE-ENERGIZED
—	* – ##	FIELD INSTRUMENT, TAG NO. AS INDICATED * INDICATES INSTRUMENT TYPE DEFINED ON LOOP SHEETS OR P & ID ## INDICATES LOOP NO.
	LS OR ■	LIQUID LEVEL (FLOAT) SWITCH NORMALLY OPEN, CLOSES ON RISING LEVEL NORMALLY CLOSED, OPENS ON RISING LEVEL
	PS OR ■	PRESSURE OR VACUUM SWITCH NORMALLY OPEN, CLOSES ON RISING PRESSURE NORMALLY OPEN, CLOSES ON DROPPING PRESSURE NORMALLY CLOSED, OPENS ON RISING PRESSURE NORMALLY CLOSED, OPENS ON DROPPING PRESSURE
	TS OR T OR ■	TEMPERATURE SWITCH OR THERMOSTAT NORMALLY OPEN, CLOSES ON RISING TEMPERATURE NORMALLY OPEN, CLOSES ON DROPPING TEMPERATURE NORMALLY CLOSED, OPENS ON RISING TEMPERATURE NORMALLY CLOSED, OPENS ON DROPPING TEMPERATURE
	FS OR ■	FLOW SWITCH (AIR, WATER, ETC.) NORMALLY OPEN, CLOSES ON INCREASED FLOW NORMALLY CLOSED, OPENS ON INCREASED FLOW
	ZS OR ■	POSITION (LIMIT) SWITCH NORMALLY OPEN NORMALLY OPEN – HELD CLOSED NORMALLY CLOSED NORMALLY CLOSED – HELD OPEN
	WS OR ■	TORQUE SWITCH NORMALLY OPEN, CLOSES ON HIGH TORQUE NORMALLY CLOSED, OPENS ON HIGH TORQUE
#	—	UTILIZED IN CONJUNCTION WITH OTHER CONTROL SCHEMATIC SYMBOLS TO DEPICT THE PHYSICAL LOCATION OF THE DEVICE # REPRESENTS LOCATION SEE LOCATION LEGEND ON DRAWING
	—	CONDUCTORS OR CONDUITS CROSSING PATHS BUT NOT CONNECTED
	—	CONDUCTORS ELECTRICALLY CONNECTED
	S	SOLENOID VALVE

ONE LINE OR CONTROL DIAGRAM	PLAN	DESCRIPTION
LA	—	LIGHTNING ARRESTER
		GROUND OR GROUND ROD
30A	—	FUSE, AMPERE RATING AS NOTED
	HTR	STRIP HEATER OR HEATING ELEMENT
	—	INDUCTOR
TG	TG	TACHOMETER GENERATOR
	—	CONTACT, NORMALLY OPEN (NO)
	—	CONTACT, NORMALLY CLOSED (NC)
	—	OVERLOAD RELAY HEATER
	—	* K = KEY INTERLOCK E = ELECTRICAL INTERLOCK
TB	—	TERMINAL OR TEST BLOCK
RTD	—	RESISTANCE TEMPERATURE DETECTOR
VE OR VE	—	VIBRATION DETECTOR
DM	DM	DAMPER MOTOR
ETM	—	ELAPSED TIME METER
M	M	MOTOR OPERATED VALVE OR GATE
	—	INDICATES LIMITS OF ELECTRICAL EQUIPMENT OR WIRING ENCLOSURE

EXISTING WORK | NEW WORK | FUTURE EXPANSION

EXISTING, NEW OR FUTURE CONDITION DESIGNATION

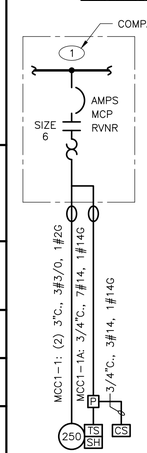

INDICATES CONDUIT IS ALL OR PARTIALLY LOCATED UNDERGROUND. CONDUIT SIZE SHOWN INDICATES THE SIZE WITHIN STRUCTURE. UNDERGROUND CONDUIT SIZE IS SHOWN ON DUCT BANK SECTIONS.

MCC1-1: (2) 3"C., 3#3/0, 1#2G DENOTES A QUANTITY OF TWO (2) 3-INCH CONDUITS EACH CONTAINING THREE NO. 3/0 AWG CONDUCTORS AND 1 NO. 2 AWG GROUND CONDUCTOR, FROM NEMA SIZE 6 STARTER IN MCC-1 TO 250HP MOTOR LOAD.

MCC1-1A: 3/4"C., 7#14, 1#14G DENOTES ONE 3/4-INCH CONDUIT CONTAINING SEVEN NO. 14 AWG CONTROL CONDUCTORS AND 1 NO. 14 AWG GROUND CONDUCTOR.

MCC1-1 AND MCC1-1A: DENOTES CONDUIT IDENTIFICATION (ID) (TYPICAL)

NOTES:
1. PROTECTIVE/CONTROL DEVICE AS SHOWN.
2. CONTROL/AUXILIARY DEVICES AT OR NEAR EQUIPMENT. EQUIPMENT SHALL BE INSTALLED AND WIRED AS REQUIRED BY EQUIPMENT FURNISHED AND/OR CONTROL DIAGRAM.

TYPICAL ONE LINE DIAGRAM SHOWING POWER AND CONTROL TO EQUIPMENT

NOTES:

1. IN GENERAL CONDUIT ROUTING FOR EQUIPMENT AND DEVICES IS NOT SHOWN ON THE PLANS. THE CONTRACTOR SHALL BE RESPONSIBLE FOR ROUTING ALL CONDUITS WHICH SHALL INCLUDE CONDUITS SHOWN ON ONE-LINE AND RISER DIAGRAMS AND HOME-RUNS SHOWN ON PLAN DRAWINGS. REFER TO SPECIFICATIONS FOR MATERIALS AND INSTALLATION REQUIREMENTS.
2. THE WIRING DIAGRAMS, QUANTITY AND SIZE OF WIRES AND CONDUITS REPRESENT A SUGGESTED ARRANGEMENT BASED UPON SELECTED STANDARD COMPONENTS OF ELECTRICAL EQUIPMENT. MODIFICATIONS ACCEPTABLE TO THE ENGINEER MAY BE MADE BY THE CONTRACTOR TO ACCOMMODATE EQUIPMENT ACTUALLY PURCHASED. THE BASIC SEQUENCE AND METHOD OF CONTROL MUST BE MAINTAINED AS INDICATED ON THE DRAWINGS AND/OR SPECIFICATIONS.
3. SWITCHGEAR AND MOTOR CONTROL CENTER COMPARTMENT DESIGNATIONS AS INDICATED BELOW:
   BLANK: NOT INTENDED FOR USE. PLATE ONLY
   SPACE: EQUIPPED WITH REQUIRED BUS AND HARDWARE FOR THE FUTURE ADDITION OF BREAKERS AND/OR STARTERS WITHIN THE SIZE AND RANGE SHOWN
   SPARE: CONTAINS A COMPLETELY INSTALLED BREAKER AND/OR STARTER OF SIZE AND TYPE INDICATED FOR FUTURE USE.
4. INTERPRETATION OF ELECTRICAL DRAWINGS: CIRCUIT IDENTIFICATION, ROUTING, AND SIZES OF CONDUITS AND WIRES ARE SHOWN ON THE FOLLOWING DRAWINGS:

A. ONE LINE POWER DIAGRAMS: POWER, CONTROL AND SIGNAL WIRING REQUIREMENTS FOR ELECTRICAL DISTRIBUTION EQUIPMENT AND UTILIZATION EQUIPMENT POWERED FROM SWITCHGEAR, SWITCHBOARDS, MOTOR CONTROL CENTERS AND MAJOR POWER DISTRIBUTION PANELBOARDS ARE TYPICALLY SHOWN ON THE ONE LINE DIAGRAMS. THE PARAMETERS IDENTIFIED ON THE ONE LINE DIAGRAMS ARE: CIRCUIT IDENTIFICATION, CIRCUIT ORIGIN AND DESTINATION, CONDUIT SIZE, WIRE SIZE AND QUANTITY FOR COMPLETE CIRCUIT LENGTH, AND AUXILIARY DEVICES ASSOCIATED WITH THE CONTROL/PROTECTION OF THE POWERED EQUIPMENT, AND SIZE OF THE GROUNDING ELECTRODE CONDUCTORS.

B. INSTRUMENTATION AND CONTROL RISER DIAGRAMS: POWER, CONTROL, SIGNAL AND DATA HIGHWAY WIRING REQUIREMENTS FOR INSTRUMENTS AND CONTROL DEVICES CONTROLLED/MONITORED FROM INSTRUMENTATION AND CONTROL PANELS SUCH AS RTUS, PLCS, TERMINAL CABINETS, AND REMOTE I/O PANELS ARE TYPICALLY SHOWN ON THE INSTRUMENTATION AND CONTROL ONE LINE DIAGRAMS. THE PARAMETERS IDENTIFIED ON THE ONE LINE DIAGRAMS ARE: CIRCUIT IDENTIFICATION, CIRCUIT ORIGIN AND DESTINATION, CONDUIT SIZE, WIRE SIZE, QUANTITY AND TYPE FOR COMPLETE CIRCUIT LENGTH, AND AUXILIARY DEVICES ASSOCIATED WITH THE CONTROL/PROTECTION OF THE POWERED EQUIPMENT.

C. FLOOR PLANS: FOR DETERMINING THE LENGTH OF CIRCUITS LOCATED WITHIN STRUCTURES, FLOOR PLANS SHOW THE LOCATION OF ELECTRICAL DISTRIBUTION EQUIPMENT, CONTROL PANELS, UTILIZATION EQUIPMENT, INSTRUMENTS, ANCILLARY EQUIPMENT AND DEVICES AND THE ANTICIPATED PENETRATION LOCATIONS WHERE CONDUITS EXIT/ENTER THE STRUCTURE. HOMERUNS MAY ALSO BE SHOWN FROM MISCELLANEOUS EQUIPMENT NOT SHOWN ON A ONE LINE OR RISER DIAGRAM.

D. SITE PLANS: FOR DETERMINING THE LENGTH OF CIRCUITS EXTERIOR TO STRUCTURES AND TO IDENTIFY THE SPECIFIC REQUIREMENTS OF THE UNDERGROUND CONDUITS OR DUCT BANKS, SITE PLANS SHOW THE GENERAL ROUTING OF UNDERGROUND CONDUITS AND DUCT BANKS WITH SECTIONS INDICATING THE CONDUIT SIZE, ARRANGEMENT AND CIRCUIT ROUTING.

E. NOTE THAT CONDUIT SIZE WITHIN THE STRUCTURE IS INDICATED ON ONE-LINE DIAGRAM AND UNDERGROUND SIZE IS INDICATED ON DUCT BANK SECTIONS.

GENERAL NOTE
THIS IS A STANDARD LEGEND. SOME SYMBOLS MAY NOT APPEAR ON THE DRAWINGS.

STATE OF TEXAS
JOYSON VARGHESE
134792
LICENSED PROFESSIONAL ENGINEER
12/9/23

REV. NO.	DATE	DRWN	CHKD	REMARKS

DESIGNED BY: K. DINEESH
DRAWN BY: M. VISHNU
SHEET CHK'D BY: J. VARGHESE
CROSS CHK'D BY: S. MEHTA
APPROVED BY: J. VARGHESE
DATE: DECEMBER 2023

CDM Smith
8310-1 N Capital of Texas Hwy, Suite 250
Austin, TX 78731
Tel: (512) 346-1100
TBPELS Firm Registration No. F-3043

CITY OF GEORGETOWN, TEXAS

CEDAR BREAKS AND D B WOOD LIFT STATIONS

ELECTRICAL SYMBOLS, LEGEND, AND ABBREVIATIONS I

PROJECT NO. 2048-272644
FILE NAME: E001LSLG.DWG
SHEET NO. E-1

XREFs: [CDMS_2234_South Iake to South fork_Border: J. VARGHESE- review stamp, CDMS_2234_ LS_Border] Images: []
Last saved by: VARGHESEJ2 Time: 12/11/2023 12:00:28 PM
pw:\\cdmsmith-pz02-pw.bentley.com:pw_pf1\2048\272644\04 Design Services NM_50%\09 Electrical\10 BIM_CADD\E001LSLG.dwg
©2023 CDM SMITH ALL RIGHTS RESERVED.
REUSE OF DOCUMENTS: THESE DOCUMENTS AND DESIGNS PROVIDED BY PROFESSIONAL SERVICE, INCORPORATED HEREIN, ARE THE PROPERTY OF CDM SMITH AND ARE NOT TO BE USED, IN WHOLE OR PART, FOR ANY OTHER PROJECT WITHOUT THE WRITTEN AUTHORIZATION OF CDM SMITH.

Plotted: 12/11/2023 3:03:46 PM

SYMBOL	DESCRIPTION
A 3 b	LIGHTING FIXTURE "A" – FIXTURE TYPE (SEE LIGHTING FIXTURE SCHEDULE) "b" – CONTROLLED BY SWITCH "b" "3" – CIRCUIT NUMBER
A 3 b	LIGHTING FIXTURE, NOTATIONS SAME AS ABOVE
A 3 b	WALL MOUNTED TYPE LIGHTING FIXTURE, NOTATIONS SAME AS ABOVE
A 3 OR A 3	CROSS HATCH INDICATES LIGHTING FIXTURE THAT IS UNSWITCHED AND SHALL REMAIN ON AT ALL TIMES. NOTATIONS SAME AS ABOVE.
A 3 b OR A 3 b	SHADED AREA INDICATES LIGHTING FIXTURE THAT IS EQUIPPED WITH EMERGENCY BACKUP POWER SOURCE. NOTATIONS SAME AS ABOVE.
A 3	POLE MOUNTED AREA TYPE LIGHTING FIXTURE, NOTATIONS SAME AS ABOVE
A 3	POLE MOUNTED ROADWAY TYPE LIGHTING FIXTURE, NOTATIONS SAME AS ABOVE
EM 3 (*)	EMERGENCY LIGHTING BATTERY UNIT WITH TWO LAMP HEADS "EM" – FIXTURE TYPE (SEE LIGHTING FIXTURE SCHEDULE) "3" – SUPERVISORY CIRCUIT * – FIXTURE TAG #
R–2 BU–1(*)	REMOTE EMERGENCY ADJUSTABLE WALL LIGHTING FIXTURE WITH TWO LAMP HEADS "R–2" – FIXTURE TYPE (SEE LIGHTING FIXTURE SCHEDULE) * – HOME RUN TO BATTERY UNIT INDICATED. CONDUIT SHALL BE 3/4" AND CONTAIN (2) NO. 12 AWG BRANCH CIRCUIT CONDUCTORS AND (1) NO. 12 AWG GROUND CONDUCTOR UNLESS OTHERWISE INDICATED.
A 3	COMBINATION BATTERY UNIT AND EXIT SIGN. FILLED QUADRANT REPRESENTS FACE SIDE OF SIGN.
A 3	CEILING MOUNTED EXIT SIGN, NOTATIONS SAME AS ABOVE. WHEN USED, ARROW INDICATES DIRECTION OF EGRESS. FILLED QUADRANT REPRESENTS FACE SIDE OF SIGN. (DOUBLE FACE DOUBLE CHEVRONS SHOWN)
A 3	WALL MOUNTED EXIT SIGN, NOTATIONS SAME AS ABOVE. WHEN USED, ARROW INDICATES DIRECTION OF EGRESS. FILLED QUADRANT REPRESENTS FACE SIDE OF SIGN.
RH–3 E 3 BU–1(*)	REMOTE EMERGENCY CEILING LIGHTING FIXTURE. "RH–3" – FIXTURE TYPE (SEE LIGHTING FIXTURE SCHEDULE) "3" – SUPERVISORY CIRCUIT * – HOME RUN TO BATTERY UNIT INDICATED. CONDUIT SHALL BE 3/4" AND CONTAIN 2 NO. 12 AWG BRANCH CIRCUIT CONDUCTORS AND 1 NO. 12 AWG GROUND CONDUCTOR UNLESS OTHERWISE INDICATED.
	HOME RUN TO DESIGNATED EQUIPMENT. BRANCH CIRCUIT CONDUIT WITH 2 NO. 12 AWG BRANCH CIRCUIT CONDUCTORS AND 1 NO. 12 AWG GROUND CONDUCTOR UNLESS OTHERWISE NOTED. NUMBER OF ARROWS INDICATE NUMBER OF CIRCUITS. FOR MINIMUM SIZE CONDUIT PERMITTED REFER TO THE SPECIFICATIONS.
	CONDUIT CONCEALED IN WALL, IN SLAB ABOVE, OR ABOVE CEILING.
	CONDUIT CONCEALED IN OR BELOW FLOOR OR UNDERGROUND.
	CONDUIT RUN EXPOSED. RUN PARALLEL OR PERPENDICULAR TO STRUCTURE OR WALL.
	'X' INDICATES EXPLOSION PROOF CONDUIT SEAL FITTING.
	CONCRETE ENCASED DUCTBANK. WIDTH VARIES, SEE DUCTBANK SECTION/DETAILS FOR REQUIREMENTS AND WIDTH
	CONDUIT STUBBED OUT AND CAPPED
(2) 3"C., 3#3/0, 1#2G	DENOTES A QUANTITY OF TWO (2) 3–INCH CONDUITS EACH CONTAINING THREE NO. 3/0 AWG CONDUCTORS AND 1 NO. 2 AWG GROUND CONDUCTOR.
2–2/C#16 SH	DENOTES A QUANTITY OF TWO INSTRUMENT CABLES. EACH CABLE TO CONSIST OF TWO NO. 16 AWG CONDUCTORS TWISTED TOGETHER AND COVERED WITH A METALLIC SHIELD AND AN OVERALL PROTECTIVE JACKET. REFER TO THE SPECIFICATIONS FOR THE EXACT CABLE TO BE PROVIDED.
2–3/C#16 SH	SAME AS ABOVE EXCEPT CABLE TO CONSIST OF THREE NO. 16 AWG CONDUCTORS TWISTED, SHIELDED AND COVERED WITH AN OVERALL PROTECTIVE JACKET. REFER TO THE SPECIFICATIONS FOR THE EXACT CABLE TO BE PROVIDED.
(3) 4"C.	THREE 4–INCH CONDUITS
	FLEXIBLE METAL CONDUIT "WHIP" (3/4"C., 2#12, 1#12G UNLESS OTHERWISE NOTED) FOR LIQUID TIGHT MOTOR CONNECTIONS
	'X' INDICATES CONDUIT SEAL FITTING IN OTHER THAN CODE REQUIRED LOCATIONS.
	INDICATES MOTOR STARTER AND/OR MOTOR CONTROL EQUIPMENT WITHIN THE ENCLOSURE.

SYMBOL	DESCRIPTION
$a	SINGLE POLE SWITCH "a" INDICATES FIXTURES CONTROLLED.
$a2	DOUBLE POLE SWITCH "a" INDICATES FIXTURES CONTROLLED.
$c3	THREE WAY SWITCH "c" INDICATES FIXTURES CONTROLLED.
$a4	FOUR WAY SWITCH "a" INDICATES FIXTURES CONTROLLED.
$aD	DIMMER SWITCH "a" INDICATES FIXTURES CONTROLLED
$OS	SINGLE POLE SWITCH "OS" INDICATES A PASSIVE INFRARED OCCUPANCY SENSOR
$OS2	DOUBLE POLE SWITCH "OS" INDICATES PROGRAMMABLE OCCUPANCY SENSOR CAPABLE OF INBOARD/OUTBOARD SWITCHING
$DT	SINGLE POLE SWITCH "DT" INDICATES DUAL TECHNOLOGY PROGRAMMABLE OCCUPANCY SENSOR CAPABLE OF SENSING MOTION AND SOUND
C 3	LIGHTING CONTACTOR WITH NUMBER OF POLES AS INDICATED
TM	TIME SWITCH
	PUSH BUTTON STATION
TYPE A	INDICATES ALL LIGHTING FIXTURES WITHIN THE ROOM OR AREA IN WHICH THIS NOTATION APPEARS SHALL BE TYPE "A" UNLESS OTHERWISE NOTED. SEE LIGHTING FIXTURE SCHEDULE FOR TYPES
	LIGHTING PANELBOARD (LP–#) SHOWN ON PLAN PER ACTUAL PANEL DIMENSIONS
	POWER PANELBOARD (PP–#) OR DISTRIBUTION PANELBOARD (DP–#) SHOWN ON PLAN PER ACTUAL PANEL DIMENSIONS
	LIGHTING CONTACTOR PANELBOARD (LCP–#) SHOWN ON PLAN PER ACTUAL PANEL DIMENSIONS
* 4	DUPLEX RECEPTACLE, 20A, 120V, 2P, 3W * GFCI – GROUND FAULT CIRCUIT INTERRUPTER TYPE WP – WEATHERPROOF XP – EXPLOSION PROOF T – TRANSIENT VOLTAGE SURGE SUPPRESSOR IC – ISOLATED GROUND 4 – CIRCUIT NUMBER
* 4	DUPLEX RECEPTACLE, 20A, 120V, 2P, 3W MOUNTED ABOVE COUNTER–TOP OR 42" AFF * NOTATIONS SAME AS ABOVE
* 60 3 4W	SPECIAL PURPOSE RECEPTACLE * – VOLT RATING "3" – NUMBER OF POLES "60" – AMPERE RATING "4W" – 4 WIRES IN ADDITION TO GROUND
	MULTI–OUTLET ASSEMBLY, SYMBOL DENOTES RECEPTACLE TYPE
	FLUSH FLOOR OUTLET BOX WITH TYPE OUTLET INDICATED
	UNDER FLOOR DUCT SYSTEM WITH TYPE OUTLETS INDICATED
	THREE CELL UNDER FLOOR DUCT SYSTEM JUNCTION BOX
J OR J	JUNCTION BOX
P	PULL BOX
TC	TERMINAL CABINET
OS	OCCUPANCY SENSOR
PC	PHOTOCELL
ESA	EMERGENCY EYEWASH/SHOWER ALARM STATION WITH FLOW SWITCH(ES)
	INDICATED EQUIPMENT AND MATERIALS TO BE DEMOLISHED
	GROUND SYSTEM GRID OR LOOP, 36" BELOW FINISHED GRADE UNLESS OTHERWISE NOTED.
	EXOTHERMIC WELD CONNECTION
	3/4" x 10'–0" GROUND ROD. UNLESS SPECIFIED OTHERWISE.
	GROUND ROD TEST WELL STATION (SEE DETAIL SHEET FOR REQUIREMENTS)

SYMBOL	DESCRIPTION
COMMUNICATION SYSTEMS	
K	TELEPHONE OUTLET FOR DESK TYPE HANDSET K = KEY SYSTEM
K	TELEPHONE OUTLET FOR WALL TYPE HANDSET (MOUNT UP 4'–6") K = KEY SYSTEM
	PAGE/PARTY TELEPHONE OUTLET FOR DESK TYPE HANDSET
	PAGE/PARTY TELEPHONE OUTLET FOR WALL TYPE HANDSET, MOUNT UP 4'–6"
S H W	PAGING SPEAKER, WALL MOUNTED H = HORN TYPE W = WIDE ANGLE TYPE
S W	PAGING SPEAKER, WALL MOUNTED, BI–DIRECTIONAL, HORN TYPE W = WIDE ANGLE TYPE
S	PAGING SPEAKER, FLUSH MOUNTED CEILING TYPE
S	PAGING SPEAKER, SURFACE MOUNTED CEILING TYPE
VC	REMOTE WALL MOUNTED VOLUME CONTROL FOR CEILING SPEAKER, MOUNT UP 5'–0"
A	PAGING SPEAKER AMPLIFIER ASSEMBLY
TM	TELEPHONE CABINET OR BACKBOARD AS NOTED
P OR C	"C" – DATA INPUT/OUTPUT CABLE OUTLET "P" – PROCESS COMPUTER SYSTEM (CAT6 RJ–45 JACK)
GB	GAS DETECTION/VENTILATION FAILURE WEATHERPROOF DUAL–LITE BEACON MOUNT TOP OF DEVICE UP 6'–8" A.F.F.
15 G	GAS DETECTION/VENTILATION FAILURE HORN/STROBE MOUNT TOP OF DEVICE UP 6'–8" A.F.F.
G	GAS DETECTION/VENTILATION FAILURE HORN, MOUNT TOP OF DEVICE UP 6'–8" A.F.F.
G	GAS DETECTION/VENTILATION FAILURE STROBE, MOUNT TOP OF DEVICE UP 6'–8" A.F.F.
SECURITY SYSTEMS	
SACP	SECURITY ALARM CONTROL PANEL
DS	SECURITY ALARM DOOR SWITCH
K	SECURITY ALARM KEY PAD
R	SECURITY SYSTEM CARD ACCESS READER
WS	SECURITY ALARM WINDOW SWITCH
	SECURITY ALARM MOTION DETECTOR
CCTV	CLOSED CIRCUIT TV CAMERA
PTZ	PAN, TILT, ZOOM CAMERA LENS CONTROLS
GB	GLASS BREAK DETECTOR
FIRE ALARM SYSTEMS	
H 200 R	FIRE ALARM HEAT DETECTOR 135 FIXED TEMPERATURE UNLESS OTHERWISE NOTED. "200" – 200 FIXED TEMPERATURE "R" – FIXED TEMPERATURE RATE–OF–RISE TYPE
I	FIRE ALARM SMOKE DETECTOR PHOTOELECTRIC TYPE UNLESS OTHERWISE NOTED. "I" – IONIZATION TYPE.
D	FIRE ALARM DUCT SMOKE DETECTOR
FACP	FIRE ALARM CONTROL PANEL
FV	FIRE ALARM VENTILATION PANEL WITH GRAPHIC PANEL
FA	REMOTE FIRE ALARM ANNUNCIATOR PANEL
F	FIRE ALARM MASTER BOX
F	FIRE ALARM HORN, MOUNT UP 7'–6"
15 F	FIRE ALARM STROBE, MOUNT UP 6'–8" 15 = CANDELA RATING

SYMBOL	DESCRIPTION
15 F	FIRE ALARM HORN AND STROBE LIGHT COMBINATION, MOUNT UP 6'–8" 15 = CANDELA RATING
F	FIRE ALARM MANUAL PULL STATION, MOUNT UP 4'–0"
VSS	SPRINKLER VALVE SUPERVISORY SWITCH
SFS	SPRINKLER FLOW ALARM SWITCH
F	FIRE ALARM BELL
FB	WEATHERPROOF HI–INTENSITY FIRE ALARM STROBE LIGHT WITH HORN
PIR	PASSIVE INFRARED DETECTOR
R	SMOKE BEAM DETECTOR (RECEIVER)
T	SMOKE BEAM DETECTOR (TRANSMITTER)
	FIRE ALARM SMOKE DETECTOR REMOTE INDICATOR AND TEST SWITCH

ABBREVIATIONS	
A	AMPS
AC	ALTERNATING CURRENT
AFF	ABOVE FINISHED FLOOR
AFG	ABOVE FINISHED GRADE
AL	ALUMINUM
AIC	AMPERE INTERRUPTING CAPACITY
AMP	AMPERE
ATS	AUTOMATIC TRANSFER SWITCH
AUTO	AUTOMATIC
AUX	AUXILIARY
AWG	AMERICAN WIRE GAUGE
BKR	BREAKER
BLDG	BUILDING
C	CONDUIT
CB	CIRCUIT BREAKER
CGD	COMBUSTIBLE GAS DETECTOR
CKT	CIRCUIT
CLB	CURRENT LIMITING BREAKER
CLF	CURRENT LIMITING FUSE
CP	CONTROL PANEL
CPT	CONTROL POWER TRANSFORMER
CR	CONTROL RELAY
CS	CONTROL SWITCH/CONTROL STATION
CT	CURRENT TRANSFORMER
CU	COPPER
CWS	CONDUIT WALL SEAL
DC	DIRECT CURRENT
DIA	DIAMETER
DMU	DIGITAL METERING UNIT
DN	DOWN
EC	EMPTY CONDUIT
ELEC	ELECTRICAL

ABBREVIATIONS (CONTINUED)	
ELEV	ELEVATION
EM	EMERGENCY
ENCL	ENCLOSURE OR ENCLOSED
EQUIP	EQUIPMENT
EWC	ELECTRIC WATER COOLER
EWH	ELECTRIC WATER HEATER
EX	EXISTING
FO	FIBER OPTIC
FU	FUSE
GCP	GENERATOR CONTROL PANEL
GEN	GENERATOR
G, GND	GROUND
GFI	GROUND FAULT INTERRUPTER
GRS	GALVANIZED RIGID STEEL
HACR	HEATING & AIR CONDITIONING RATED
HH	HANDHOLE
HT	HEIGHT
HID	HIGH INTENSITY DISCHARGE
HP	HORSEPOWER
HZ	HERTZ
ID	IDENTIFICATION
INSTR	INSTRUMENT
K	KILO (PREFIX)
kcmil	1000 CIRCULAR MILS
KVA	KILOVOLT AMPERES
KW	KILOWATTS
LA	LIGHTNING ARRESTER
LTG	LIGHTING
LP	LIGHTING PANEL
LV	LOW VOLTAGE
MAX	MAXIMUM
MCB	MAIN CIRCUIT BREAKER
MCC	MOTOR CONTROL CENTER
MCP	MOTOR CIRCUIT PROTECTOR
MDP	MAIN DISTRIBUTION PANEL
MFR	MANUFACTURER
MH	MANHOLE
MIN	MINIMUM
MLO	MAIN LUGS ONLY
MTD	MOUNTED
MTS	MANUAL TRANSFER SWITCH
MV	MEDIUM VOLTAGE
N	NEUTRAL
NC	NORMALLY CLOSED
NO	NORMALLY OPEN OR NUMBER
NTS	NOT TO SCALE
OH	OVERHEAD
OL	OVERLOAD
PB	PULL BOX
PCP	PUMP CONTROL PANEL
PH	PHASE
PMH	POWER MANHOLE
PNL	PANEL OR PANELBOARD
PR	PAIR
PRI	PRIMARY
PT	POTENTIAL TRANSFORMER
PVC	POLYVINYL CHLORIDE
RECPT	RECEPTACLE
REQD	REQUIRED
QTY	QUANTITY
SA	SURGE ARRESTER
SEC	SECONDS OR SECONDARY
SH	SHIELDED OR SPACE HEATER
SHH	SIGNAL HANDHOLE
SPD	SURGE PROTECTIVE DEVICE
SS	STAINLESS STEEL
SV	SOLENOID VALVE
SW	SWITCH
SWBD	SWITCHBOARD
SWGR	SWITCHGEAR
TC	TIME TO CLOSE OR TRAY CABLE
TEL	TELEPHONE
TO	TIME TO OPEN
TS	TWISTED SHIELDED OR THERMAL SWITCH
TYP	TYPICAL
UG	UNDERGROUND
UPS	UNINTERRUPTIBLE POWER SUPPLY
V	VOLTS
VA	VOLT AMPS
VFD	VARIABLE FREQUENCY DRIVE
W	WATTS, WIDTH, WITH, WIRE
WP	WEATHERPROOF
XP	EXPLOSION PROOF
XFMR	TRANSFORMER

A
E–4
SHEET NO. WHERE DETAIL IS DRAWN

SYMBOL WHERE THERE IS A DETAIL

DETAIL A
1/4" = 1'–0" E–3
SHEET NO. WHERE THERE IS A DETAIL

SYMBOL WHERE DETAIL IS DRAWN

DETAIL SYMBOL

1
E–4
SHEET NO. WHERE SECTION IS DRAWN

SYMBOL WHERE THERE IS A SECTION

SECTION 1
1/4" = 1'–0" E–3
SHEET NO. WHERE SECTION IS TAKEN

SYMBOL WHERE SECTION IS DRAWN

SECTION SYMBOL

GENERAL NOTE
THIS IS A STANDARD LEGEND. SOME SYMBOLS MAY NOT APPEAR ON THE DRAWINGS.

STATE OF TEXAS
JOYSON VARGHESE
134792
LICENSED PROFESSIONAL ENGINEER
12/9/23

REV. NO.	DATE	DRWN	CHKD	REMARKS

DESIGNED BY: K. DINEESH
DRAWN BY: M. VISHNU
SHEET CHK'D BY: J. VARGHESE
CROSS CHK'D BY: S. MEHTA
APPROVED BY: J. VARGHESE
DATE: DECEMBER 2023

CDM Smith
8310-1 N Capital of Texas Hwy, Suite 250
Austin, TX 78731
Tel: (512) 346-1100
TBPELS Firm Registration No. F-3043

CITY OF GEORGETOWN, TEXAS

CEDAR BREAKS AND D B WOOD LIFT STATIONS

ELECTRICAL SYMBOLS, LEGEND, AND ABBREVIATIONS II

PROJECT NO. 2048–272644
FILE NAME: E002LSLG.DWG
SHEET NO.
E-2

XREFs: [CDMS_2234_South lake to South fork_Border J. VARGHESE– review stamp, CDMS_2234_ LS_Border] Images: []
Last saved by: VARGHESEJ2 Time 12/11/2023 12:00:36 PM
pw:\\cdmsmith-az02-pw.bentley.com:pw_pi1\2048\272644\04 Design Services NM_50%\09 Electrical\10 BIM_CADD\E002LSLG.dwg
© 2023 CDM SMITH ALL RIGHTS RESERVED.
REUSE OF DOCUMENTS: THESE DOCUMENTS AND DESIGNS PROVIDED BY PROFESSIONAL SERVICE, INCORPORATED HEREIN, ARE THE PROPERTY OF CDM SMITH AND ARE NOT TO BE USED, IN WHOLE OR PART, FOR ANY OTHER PROJECT WITHOUT THE WRITTEN AUTHORIZATION OF CDM SMITH.
Plotted: 12/13/2023 3:03:48 PM

AREA CLASSIFICATION LEGEND:

CLASS I DIVISION 1 | CLASS I DIVISION 2 | UNCLASSIFIED

(X) AREA TAG. REFER TO SHEET G-7 AND G-8.

GENERAL NOTES:

1. REFER TO SHEET G-7 AND G-8 FOR AREA CLASSIFICATION AND MATERIALS SCHEDULE.

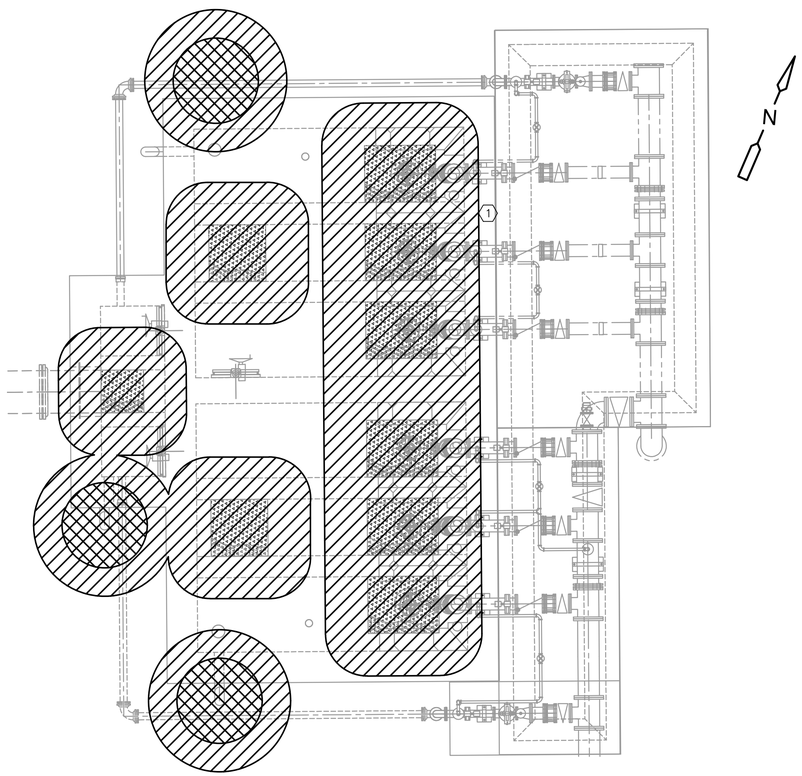

D B WOOD LIFT STATION AREA CLASSIFICATION

PLAN

3/16" = 1'- 0"

4 0 4 8

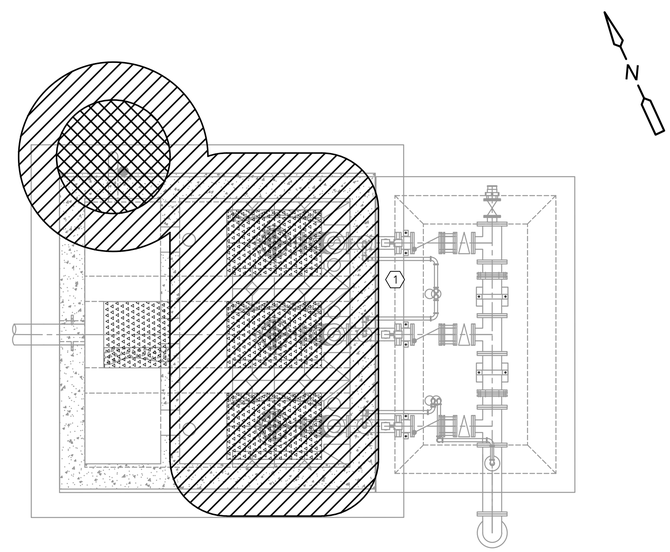

CEDAR BREAKS LIFT STATION AREA CLASSIFICATION

PLAN

1/4" = 1'- 0"

2 1 0 2 4

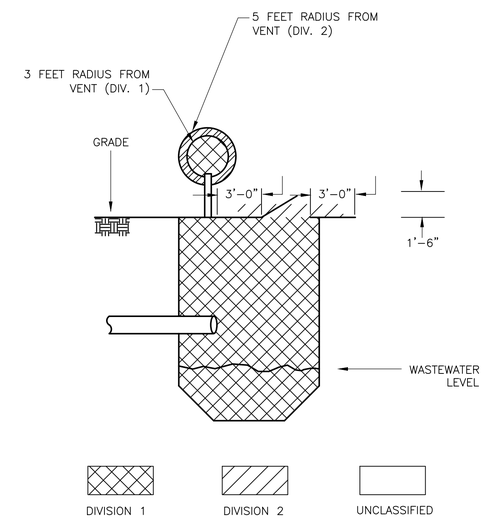

BELOW GRADE WET WELL

DETAIL A

NTS

STATE OF TEXAS
JOYSON VARGHESE
134792
LICENSED
PROFESSIONAL ENGINEER
12/9/23

REV. NO.	DATE	DRWN	CHKD	REMARKS

DESIGNED BY: K. DINEESH
DRAWN BY: M. VISHNU
SHEET CHK'D BY: J. VARGHESE
CROSS CHK'D BY: S. MEHTA
APPROVED BY: J. VARGHESE
DATE: DECEMBER 2023

CDM Smith
8310-1 N Capital of Texas Hwy, Suite 250
Austin, TX 78731
Tel: (512) 346-1100
TBPELS Firm Registration No. F-3043

CITY OF GEORGETOWN, TEXAS

CEDAR BREAKS AND D B WOOD LIFT STATIONS

CEDAR BREAKS AND D B WOOD LIFT STATION AREA CLASSIFICATION PLAN

PROJECT NO. 2048-272644
FILE NAME: E003ACPL.DWG

SHEET NO.

E-3

XREFs: [EWP002ST, EWP001ST, CDMS_2234_South lake to South fork_Border, J. VARGHESE- review stamp, MWP001LS, SWP000LS, CWP002LS, CEP004SS, SWP004LS, MWP002LS, CDMS_2234_ LS_Border, SWP001LS] Images: []
Last saved by: VARGHESEJ2 Time: 12/11/2023 12:02:10 PM
pw:\\cdmsmith-a202-pw.bentley.com:pw_pi\2048\272644\04 Design Services NM_505\09 Electrical\10 BIM_CADD\E003ACPL.dwg
©2023 CDM SMITH ALL RIGHTS RESERVED.
REUSE OF DOCUMENTS: THESE DOCUMENTS AND DESIGNS PROVIDED BY PROFESSIONAL SERVICE, INCORPORATED HEREIN, ARE THE PROPERTY OF CDM SMITH AND ARE NOT TO BE USED, IN WHOLE OR PART, FOR ANY OTHER PROJECT WITHOUT THE WRITTEN AUTHORIZATION OF CDM SMITH.

Plotted: 12/13/2023 3:03:53 PM

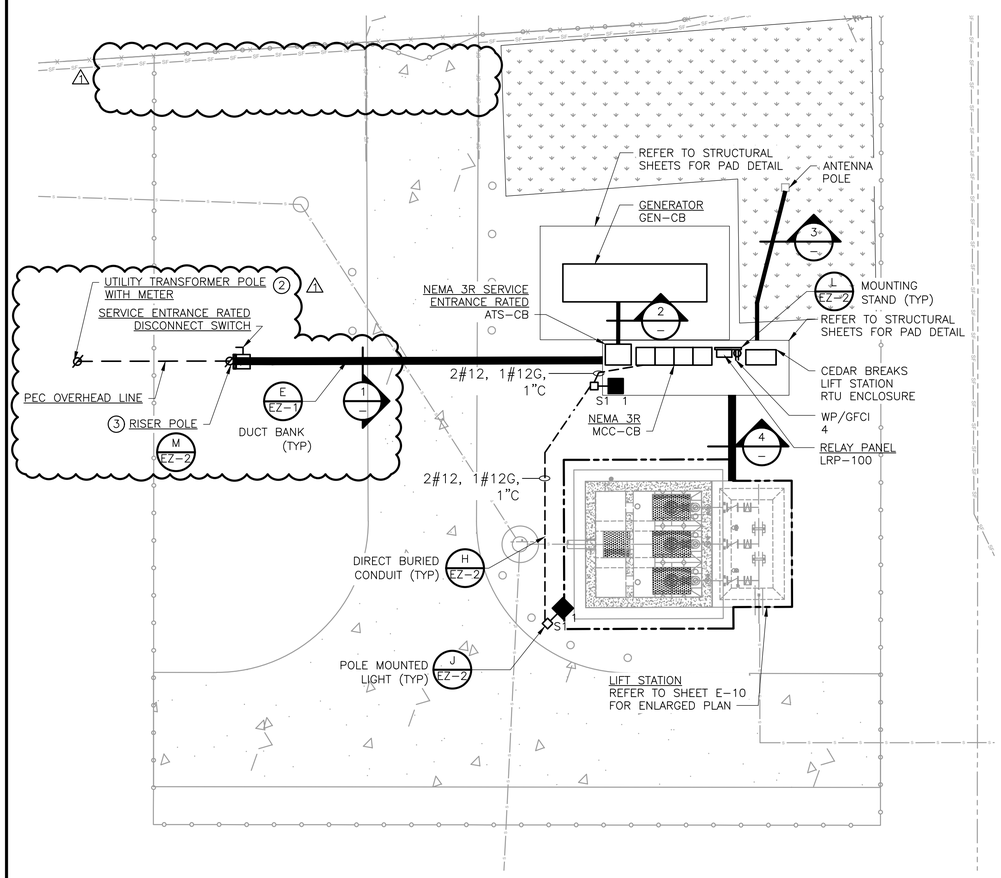

CEDAR BREAKS LIFT STATION ELECTRICAL SITE

PLAN

1" = 10'

5 0 10

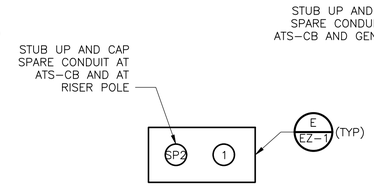

DUCTBANK SECTION 1 NTS

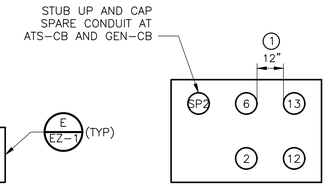

DUCTBANK SECTION 2 NTS

DUCTBANK SECTION 3 NTS

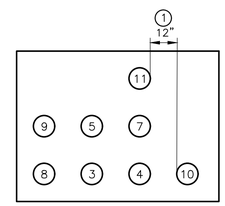

DUCTBANK SECTION 4 NTS

GENERAL NOTES:

1. REFER TO ELECTRICAL SHEET E-6 FOR ONE LINE DIAGRAM, E-8 FOR PANELBOARD AND LIGHTING FIXTURE SCHEDULE AND E-13 FOR RISER DIAGRAMS.
2. ALL LIGHTING FIXTURES AND RECEPTACLES SHALL BE WIRED BACK TO PANELBOARD LP-CB UNLESS OTHERWISE NOTED.
3. DUCTBANK SECTIONS JUST SHOWN THE CONDUITS REQUIRED AND DO NOT NECESSARILY REFLECT THE FINAL CONDUIT ARRANGEMENT. CONTRACTOR TO PROVIDE FINAL ARRANGEMENT IN AS-BUILT.

KEY NOTES:

1. MAINTAIN 12" SEPARATION BETWEEN POWER CONDUITS AND CONTROL/SIGNAL/COMMUNICATION CONDUITS.
2. PEC TO PROVIDE PRIMARY AND SECONDARY OVERHEAD LINE, POLE MOUNTED TRANSFORMER, CTS, AND METER ON A PEC PROVIDED POLE. COORDINATE FINAL LOCATION WITH PEC.
3. CONTRACTOR TO PROVIDE RISER POLE, WEATHERHEAD, RISER CONDUIT, CABLE, AND DISCONNECT SWITCH. PEC TO TERMINATE THE OVERHEAD LINE ON THE POLE.

CONDUIT SCHEDULE

ID NO.	CONDUIT TAG	REMARKS
1	UTCB-1B	
2	GENCB-1	
3	MCCCB-2	
4	MCCCB-3	
5	MCCCB-4	
6	MCCCB-5	
7	MCCCB-2C	
8	MCCCB-3C	
9	MCCCB-4C	
10	C-LIT100	
11	C-LCP100	
12	C-GENCBA	
13	C-GENCBB	
14	C-ANT	
SP2	SPARE 2"C	

STATE OF TEXAS
JOYSON VARGHESE
134792
LICENSED PROFESSIONAL ENGINEER
1/18/24

REV. NO.	DATE	DRWN	CHKD	REMARKS
1	1/18/24	JV	JV	ADDENDUM NO.3

DESIGNED BY: K. DINEESH
DRAWN BY: M. VISHNU
SHEET CHK'D BY: J. VARGHESE
CROSS CHK'D BY: S. MEHTA
APPROVED BY: J. VARGHESE
DATE: JANUARY 2024

CDM Smith
8310-1 N Capital of Texas Hwy, Suite 250
Austin, TX 78731
Tel: (512) 346-1100
TBPELS Firm Registration No. F-3043

CITY OF GEORGETOWN, TEXAS

CEDAR BREAKS AND D B WOOD LIFT STATIONS

CEDAR BREAKS LIFT STATION ELECTRICAL SITE PLAN

PROJECT NO. 2048-272644
FILE NAME: E004STPL.DWG

SHEET NO.
E-4

XREFs: [EWP002ST, EWP001ST, CDMS_2234_South_Iake_to_South_fork_Border_PP, J. VARGHESE- review stamp, MWP001LS, SWP001LS, SWP001LS, SWP000LS, CWP001LS, CDMS_2234_ LS_Border] Images: []
Last saved by: VARGHESEJ2 Time: 1/18/2024 1:32:43 PM
pw:\\cdmsmith-aa02-pw.bentley.com:pw_pi1\2048\272644\04 Design Services NM_508\09 Electrical\10 BIM_CADD\E004STPL.dwg
©2023 CDM SMITH ALL RIGHTS RESERVED.
REUSE OF DOCUMENTS: THESE DOCUMENTS AND DESIGNS PROVIDED BY PROFESSIONAL SERVICE, INCORPORATED HEREIN, ARE THE PROPERTY OF CDM SMITH AND ARE NOT TO BE USED, IN WHOLE OR PART, FOR ANY OTHER PROJECT WITHOUT THE WRITTEN AUTHORIZATION OF CDM SMITH.

Plotted: 1/18/2024 2:18:20 PM

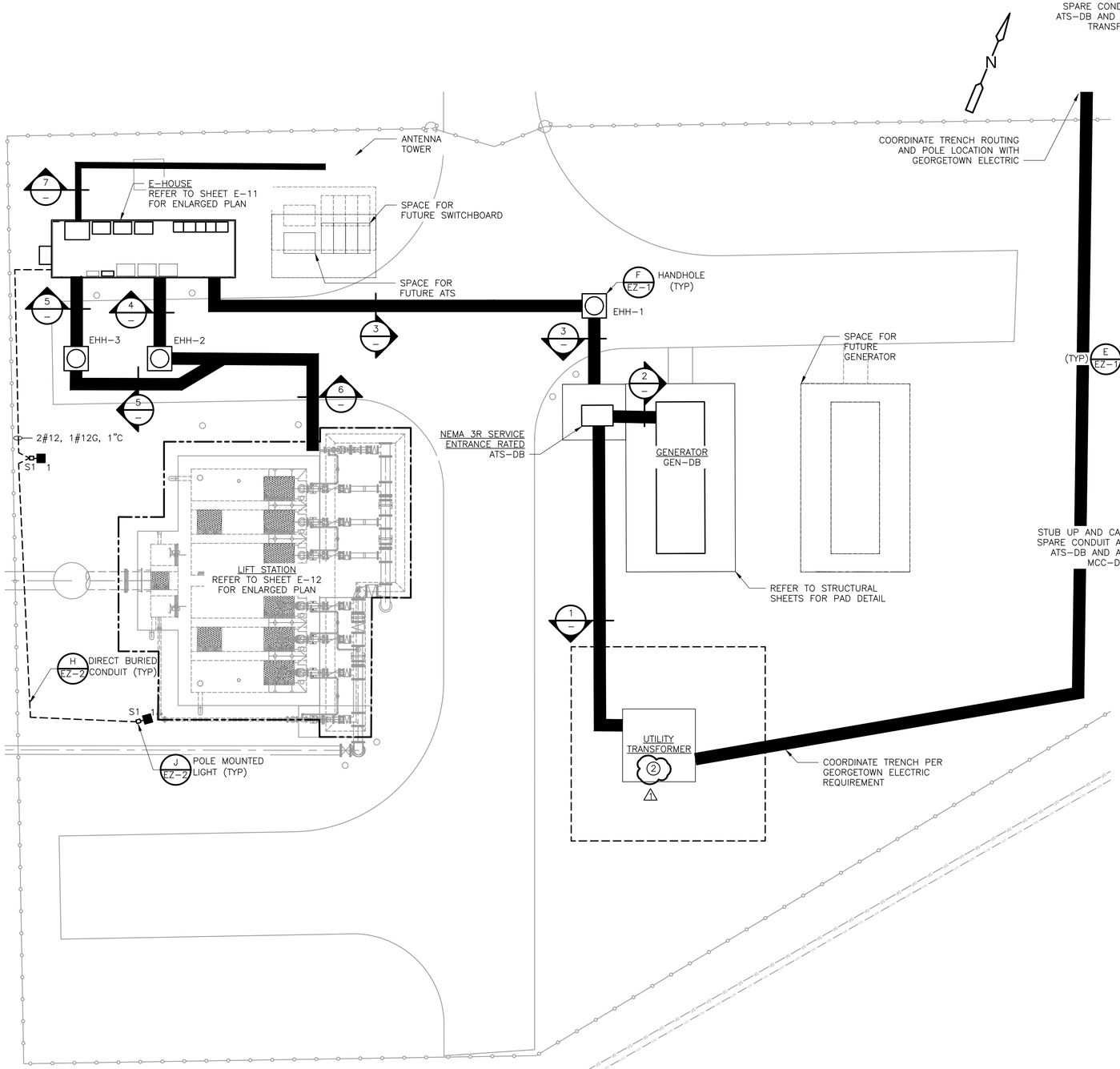

D B WOOD LIFT STATION ELECTRICAL SITE

PLAN

1" = 10'

5 0 10

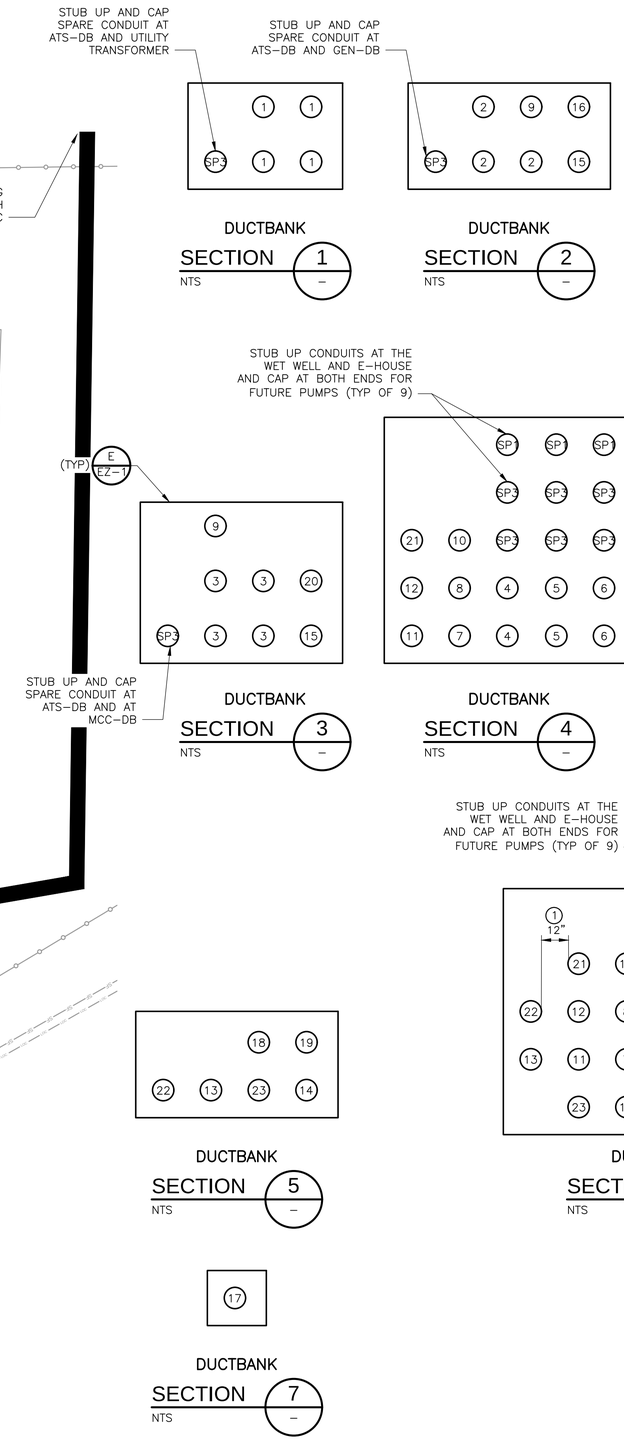

GENERAL NOTES:

1. REFER TO ELECTRICAL SHEET E-7 FOR ONE LINE DIAGRAM, E-8 FOR PANELBOARD AND LIGHTING FIXTURE SCHEDULE AND E-14 FOR RISER DIAGRAMS.
2. ALL LIGHTING FIXTURES AND RECEPTACLES SHALL BE WIRED BACK TO PANELBOARD LP-DB UNLESS OTHERWISE NOTED.
3. DUCTBANK SECTIONS JUST SHOWN THE CONDUITS REQUIRED AND DO NOT NECESSARILY REFLECT THE FINAL CONDUIT ARRANGEMENT. CONTRACTOR TO PROVIDE FINAL ARRANGEMENT IN AS-BUILT.

KEY NOTES:

1. MAINTAIN 12" SEPARATION BETWEEN POWER CONDUITS AND CONTROL/SIGNAL/COMMUNICATION CONDUITS.
2. COORDINATE WITH GEORGETOWN ELECTRIC AND PROVIDE TRANSFORMER PAD PER GEORGETOWN ELECTRIC REQUIREMENTS.

CONDUIT SCHEDULE

ID NO.	CONDUIT TAG	REMARKS
1	UTDB-1B	4 PARALLEL SETS
2	GENDB-1	3 PARALLEL SETS
3	ATSDB-1	4 PARALLEL SETS
4	MCCDB-2	2 PARALLEL SETS
5	MCCDB-3	2 PARALLEL SETS
6	MCCDB-4	2 PARALLEL SETS
7	MCCDB-5	
8	MCCDB-6	EMPTY CONDUIT FOR FUTURE PV-208
9	MCCDB-7	
10	MCCDB-2C	
11	MCCDB-3C	
12	MCCDB-4C	
13	C-LIT200	
14	C-LRP200	
15	C-GENDBA	
16	C-GENDBB	
17	C-ANT	
18	C-PV207	
19	C-PV208	EMPTY CONDUIT FOR FUTURE PV-208
20	C-GENDBC	
21	LPDB-5	
22	C-FUTURELIT	EMPTY CONDUIT FOR FUTURE LIT
23	C-FUTURELRP	EMPTY CONDUIT FOR FUTURE LRP
SP1	SPARE 1"C	
SP2	SPARE 2"C	
SP3	SPARE 3"C	

STATE OF TEXAS
JOYSON VARGHESE
134792
LICENSED PROFESSIONAL ENGINEER
1/18/24

REV. NO.	DATE	DRWN	CHKD	REMARKS
1	1/18/24	JV	JV	ADDENDUM NO.3

DESIGNED BY: K. DINEESH
DRAWN BY: M. VISHNU
SHEET CHK'D BY: J. VARGHESE
CROSS CHK'D BY: S. MEHTA
APPROVED BY: J. VARGHESE
DATE: JANUARY 2024

CDM Smith
8310-1 N Capital of Texas Hwy, Suite 250
Austin, TX 78731
Tel: (512) 346-1100
TBPELS Firm Registration No. F-3043

CITY OF GEORGETOWN, TEXAS

CEDAR BREAKS AND D B WOOD LIFT STATIONS

D B WOOD LIFT STATION ELECTRICAL SITE PLAN

PROJECT NO. 2048-272644
FILE NAME: E005STPL.DWG

SHEET NO.
E-5

XREFs: [EWP001ST, CDMS_2234_South lake to South fork_Border, J. VARGHESE- review stamp, SWP004LS, MWP002LS, CWP002LS, EWP002ST, CDMS_2234_LS_Border] Images: []
Last saved by: VARGHESEJ2 Time: 1/18/2024 1:41:32 PM
pw:\\admsmith-a202-pw.bentley.com:pw_pll\2048\272644\04 Design Services NM_50%\09 Electrical\10 BIM_CADD\E005STPL.dwg
© 2023 CDM SMITH ALL RIGHTS RESERVED.
REUSE OF DOCUMENTS: THESE DOCUMENTS AND DESIGNS PROVIDED BY PROFESSIONAL SERVICE, INCORPORATED HEREIN, ARE THE PROPERTY OF CDM SMITH AND ARE NOT TO BE USED, IN WHOLE OR PART, FOR ANY OTHER PROJECT WITHOUT THE WRITTEN AUTHORIZATION OF CDM SMITH.

Plotted: 1/18/2024 2:23:29 PM

KEY NOTES:

1. MOLDED CASE CIRCUIT BREAKER (MCCB) SHALL BE SIZED BY EQUIPMENT MANUFACTURER.
2. MOTOR CIRCUIT PROTECTOR (MCP) SHALL BE SIZED BY MOTOR CONTROL CENTER MANUFACTURER.
3. SEPARATELY DERIVED SYSTEM SHALL BE BONDED TO THE NEAREST GROUNDING ELECTRODE PER NEC.
4. PUMP MANUFACTURER PROVIDED CABLE.
5. LOCATED IN THE GENERATOR ENCLOSURE. PROVIDED AND INSTALLED BY THE GENERATOR MANUFACTURER.
6. PROVIDE SSRVS RATED FOR 60HP.

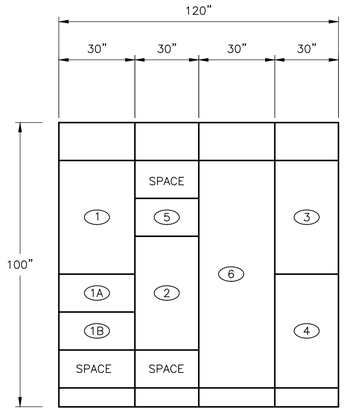

MOTOR CONTROL CENTER 'MCC-CB'

ELEVATION

NTS

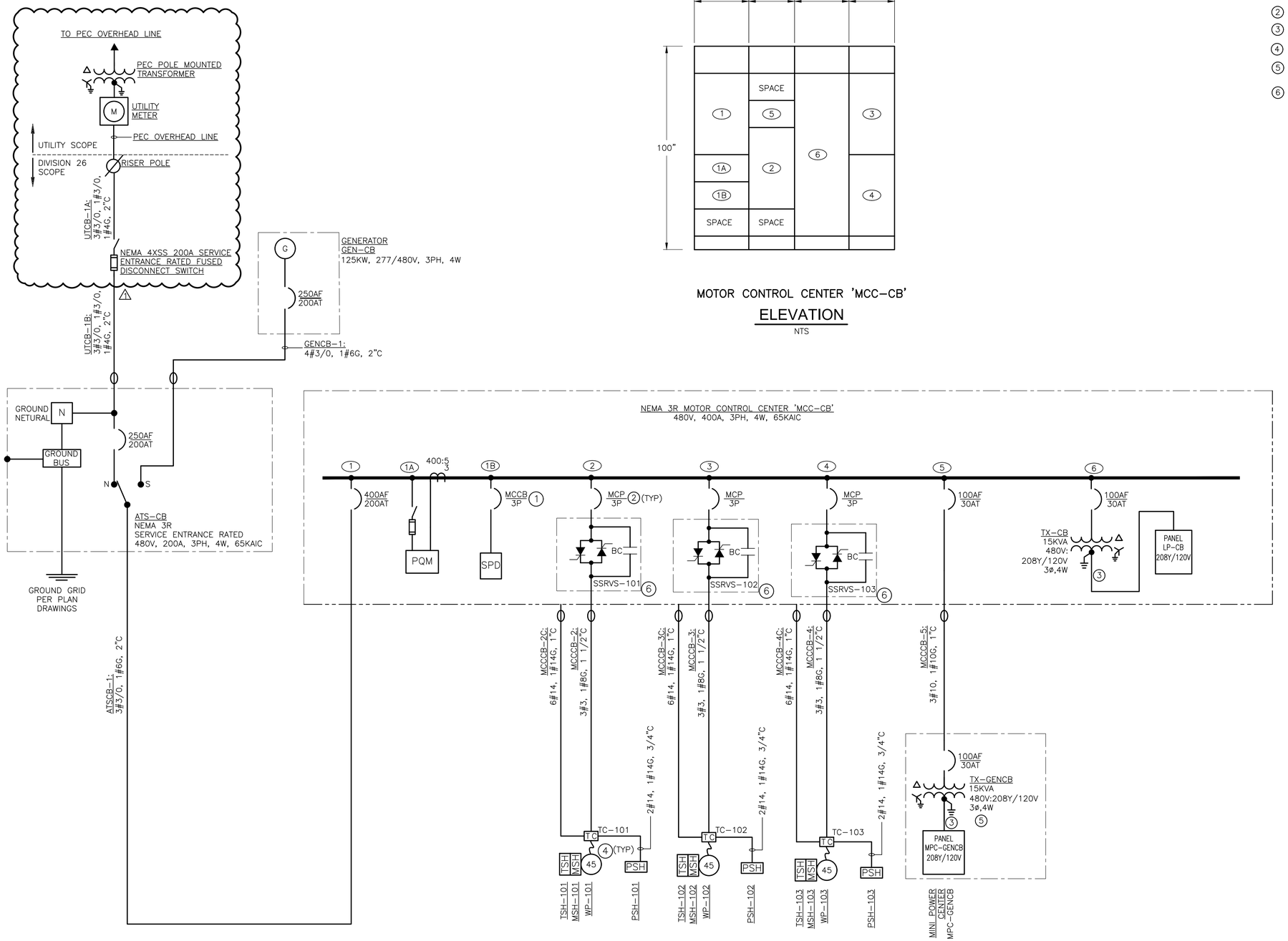

MOTOR CONTROL CENTER 'MCC-CB'

ONE-LINE DIAGRAM

NTS

STATE OF TEXAS
JOYSON VARGHESE
134792
LICENSED
PROFESSIONAL ENGINEER
1/18/24

REV. NO.	DATE	DRWN	CHKD	REMARKS
1	1/18/24	JV	JV	ADDENDUM NO.

DESIGNED BY: K. DINEESH
DRAWN BY: K. DINEESH
SHEET CHK'D BY: J. VARGHESE
CROSS CHK'D BY: S. MEHTA
APPROVED BY: J. VARGHESE
DATE: JANUARY 2024

CDM Smith
8310-1 N Capital of Texas Hwy, Suite 250
Austin, TX 78731
Tel: (512) 346-1100
TBPELS Firm Registration No. F-3043

CITY OF GEORGETOWN, TEXAS

CEDAR BREAKS AND D B WOOD LIFT STATIONS

CEDAR BREAKS LIFT STATION
MOTOR CONTROL CENTER 'MCC-CB'
ONE-LINE DIAGRAM AND ELEVATION

PROJECT NO. 2048-272644
FILE NAME: E006LSOL.DWG
SHEET NO.
E-6

XREFs: [CDMS_2234_South Ioke to South fork_Border, J. VARGHESE- review stamp, CDMS_2234_ LS_Border] images: []
Last saved by: VARGHESEJ2 Time: 1/18/2024 2:08:02 PM
pw:\\cdmsmith-az02-pw.bentley.com:pw_pf1\2048\272644\04 Design Services NM_50%\09 Electrical\10 BIM_CADD\E006LSOL.dwg
© 2023 CDM SMITH ALL RIGHTS RESERVED.
REUSE OF DOCUMENTS: THESE DOCUMENTS AND DESIGNS PROVIDED BY PROFESSIONAL SERVICE, INCORPORATED HEREIN, ARE THE PROPERTY OF CDM SMITH AND ARE NOT TO BE USED, IN WHOLE OR PART, FOR ANY OTHER PROJECT WITHOUT THE WRITTEN AUTHORIZATION OF CDM SMITH.

Plotted: 1/18/2024 2:24:01 PM

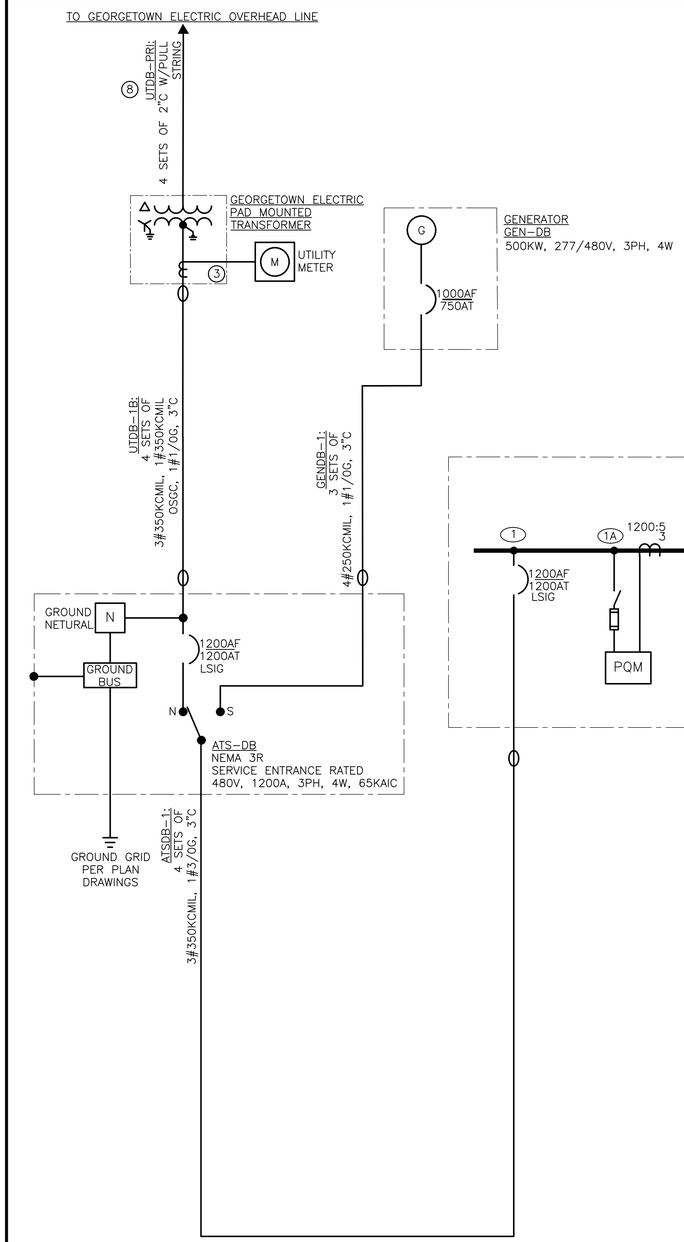

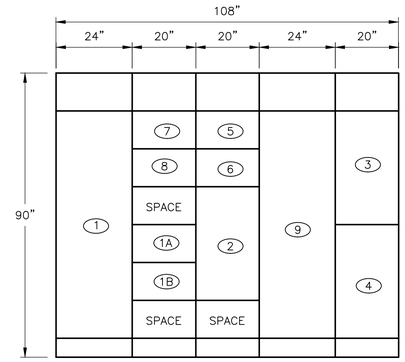

MOTOR CONTROL CENTER 'MCC-DB'

ELEVATION

NTS

KEY NOTES:

1. MOLDED CASE CIRCUIT BREAKER (MCCB) SHALL BE SIZED BY EQUIPMENT MANUFACTURER.
2. MOTOR CIRCUIT PROTECTOR (MCP) SHALL BE SIZED BY MOTOR CONTROL CENTER MANUFACTURER.
3. SEPARATELY DERIVED SYSTEM SHALL BE BONDED TO THE NEAREST GROUNDING ELECTRODE PER NEC.
4. PUMP MANUFACTURER PROVIDED CABLE.
5. STUB UP AND CAP CONDUITS AT BOTH ENDS FOR FUTURE USE.
6. COORDINATE HVAC REQUIREMENT WITH E-HOUSE MANUFACTURER.
7. LOCATED IN THE GENERATOR ENCLOSURE. PROVIDED AND INSTALLED BY THE GENERATOR MANUFACTURER.
8. APPROXIMATE 250 LINEAR FEET OF CONDUIT. COORDINATE EXACT TRENCH ROUTING AND POLE LOCATION WITH GEORGETOWN ELECTRIC.

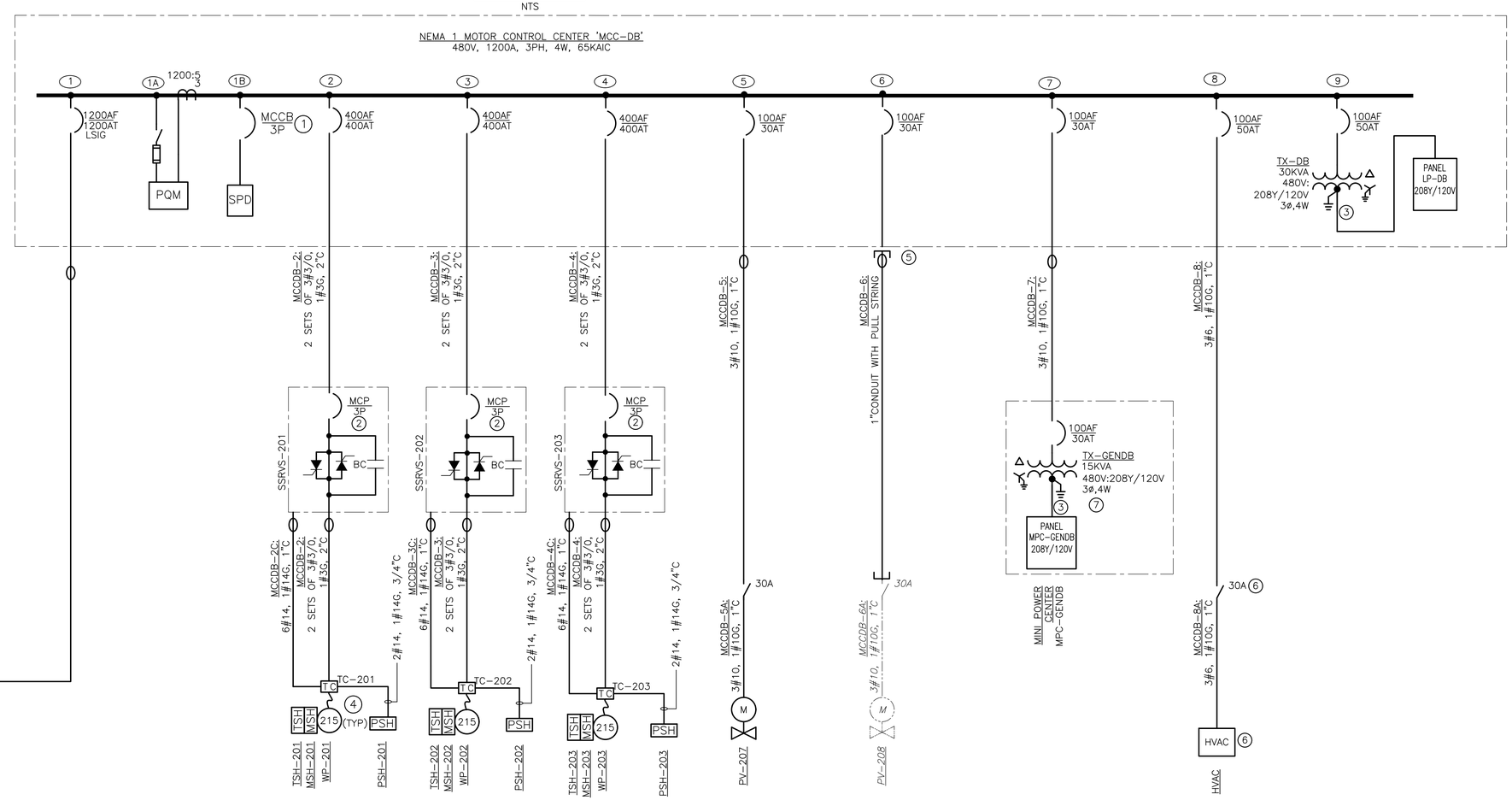

MOTOR CONTROL CENTER 'MCC-DB'

ONE-LINE DIAGRAM

NTS

STATE OF TEXAS
JOYSON VARGHESE
134792
LICENSED
PROFESSIONAL ENGINEER
12/9/23

REV. NO.	DATE	DRWN	CHKD	REMARKS

DESIGNED BY: K. DINEESH
DRAWN BY: K. DINEESH
SHEET CHK'D BY: J. VARGHESE
CROSS CHK'D BY: S. MEHTA
APPROVED BY: J. VARGHESE
DATE: DECEMBER 2023

CDM Smith
8310-1 N Capital of Texas Hwy, Suite 250
Austin, TX 78731
Tel: (512) 346-1100
TBPELS Firm Registration No. F-3043

CITY OF GEORGETOWN, TEXAS

CEDAR BREAKS AND D B WOOD LIFT STATIONS

DB WOOD LIFT STATION
MOTOR CONTROL CENTER 'MCC-DB'
ONE-LINE DIAGRAM AND ELEVATION

PROJECT NO. 2048-272644
FILE NAME: E007LSOL.DWG
SHEET NO.
E-7

XREFs: [CDMS_2234_South lake to South fork_Border, J. VARGHESE- review stamp, CDMS_2234_ LS_Border] Images: []
Last saved by: VARGHESEJ2 Time: 12/11/2023 12:01:09 PM
pw:\\cdmsmith-azo2-pw.bentley.com:pw_pi\2048\272644\04 Design Services NM_50%\09 Electrical\10 BIM_CADD\E007LSOL.dwg
© 2023 CDM SMITH ALL RIGHTS RESERVED.
REUSE OF DOCUMENTS: THESE DOCUMENTS AND DESIGNS PROVIDED BY PROFESSIONAL SERVICE, INCORPORATED HEREIN, ARE THE PROPERTY OF CDM SMITH AND ARE NOT TO BE USED, IN WHOLE OR PART, FOR ANY OTHER PROJECT WITHOUT THE WRITTEN AUTHORIZATION OF CDM SMITH.
Plotted: 12/13/2023 3:04:09 PM

KEY NOTES:

1. PROVIDE INTEGRAL SURGE PROTECTION.

PANELBOARD LP-CB (1)

60 AMP MAIN BREAKER — **100** AMP BUS RATING — **30** POLES
208/120 VOLTS — **3** PHASE — **4** WIRE — **60 Hz.**
LOCATION: **MCC-CB**
10 KA SHORT CIRCUIT RATING
ENCLOSURE RATING: **NEMA 1**
ELECTRONIC GRADE: **NO**
MOUNTING: **SURFACE**

CIRCUIT NO.	DESCRIPTION	LOAD KVA PHASE A	LOAD KVA PHASE B	LOAD KVA PHASE C	BREAKER AMPS/ POLES	NOTES	CIRCUIT NO.	DESCRIPTION	LOAD KVA PHASE A	LOAD KVA PHASE B	LOAD KVA PHASE C	BREAKER AMPS/ POLES	NOTES
1	SITE LIGHT	0.23			20 /1	7	2	RELAY PANEL LRP-100	1.00			20 /1	7
3	CEDAR BREAKS LS RTU ENCLOSURE		1.00		20 /1	7	4	EXTERIOR RECEPTACLE		0.18		20 /1	7
5	SPARE				20 /1		6	SPARE				20 /1	
7	SPARE				20 /1		8	SPARE				20 /1	
9	SPARE				20 /1		10	SPARE				20 /1	
11	SPACE				/1		12	SPACE				/1	
13	SPACE				/1		14	SPACE				/1	
15	SPACE				/1		16	SPACE				/1	
17	SPACE				/1		18	SPACE				/1	
19	SPACE				/1		20	SPACE				/1	
21	SPACE				/1		22	SPACE				/1	
23	SPACE				/1		24	SPACE				/1	
25	SPACE				/1		26	SPACE				/1	
27	SPACE				/1		28	SPACE				/1	
29	SPACE				/1		30	SPACE				/1	
	TOTAL PHASE KVA THIS SIDE	0.23	1.00	0.00				TOTAL PHASE KVA THIS SIDE	1.00	0.18	0.00		
								TOTAL KVA PER PHASE	1.23	1.18	0.00		
								TOTAL THREE PHASE KVA	2.41				

NOTES:
1. PROVIDE LOCKING HARDWARE
3. 30 ma GFI CIRCUIT BREAKER FOR EQUIPMENT PROTECTION ONLY (HEAT TRACE)
5. BRANCH CIRCUIT WIRING: 3/4"C, 3#12 & 1#12G
7. BRANCH CIRCUIT WIRING: 3/4"C, 2#12 & 1#12G
9.

NOTES CONT.:
2. 5 ma GROUND FAULT INTERRUPTER (GFI) CIRCUIT BREAKER
4. PROVIDE LOCKING HARDWARE & PAINT BREAKER HANDLE RED (FACP)
6. BRANCH CIRCUIT WIRING: 3/4'C, 3#10 & 1#10G
8. BRANCH CIRCUIT WIRING: 3/4'C, 2#8 & 1#8G
10.

PANELBORD LP–CB
SCHEDULE
NTS

PANELBOARD LP-DB (1)

60 AMP MAIN BREAKER — **100** AMP BUS RATING — **30** POLES
208/120 VOLTS — **3** PHASE — **4** WIRE — **60 Hz.**
LOCATION: **MCC-DB**
10 KA SHORT CIRCUIT RATING
ENCLOSURE RATING: **NEMA 1**
ELECTRONIC GRADE: **NO**
MOUNTING: **SURFACE**

CIRCUIT NO.	DESCRIPTION	LOAD KVA PHASE A	LOAD KVA PHASE B	LOAD KVA PHASE C	BREAKER AMPS/ POLES	NOTES	CIRCUIT NO.	DESCRIPTION	LOAD KVA PHASE A	LOAD KVA PHASE B	LOAD KVA PHASE C	BREAKER AMPS/ POLES	NOTES
1	SITE LIGHT	0.23			20 /1	7	2	RELAY PANEL LRP-200	1.00			20 /1	7
3	DB WOOD LS RTU ENCLOSURE		1.00		20 /1	7	4	ELECTRICAL BLDG LIGHTS		0.30		20 /1	7
5	LIFT STATION RECEPTACLE			0.36	20 /1		6	EXTERIOR ELEC BLDG RECEPTACLE			0.72	20 /1	7
7	SPARE				20 /1		8	ELECTRICAL BLDG RECEPTACLE	0.36			20 /1	7
9	SPARE				20 /1		10	SPARE				20 /1	
11	SPACE				/1		12	SPACE				/1	
13	SPACE				/1		14	SPACE				/1	
15	SPACE				/1		16	SPACE				/1	
17	SPACE				/1		18	SPACE				/1	
19	SPACE				/1		20	SPACE				/1	
21	SPACE				/1		22	SPACE				/1	
23	SPACE				/1		24	SPACE				/1	
25	SPACE				/1		26	SPACE				/1	
27	SPACE				/1		28	SPACE				/1	
29	SPACE				/1		30	SPACE				/1	
	TOTAL PHASE KVA THIS SIDE	0.23	1.00	0.36				TOTAL PHASE KVA THIS SIDE	1.36	0.30	0.72		
								TOTAL KVA PER PHASE	1.59	1.30	1.08		
								TOTAL THREE PHASE KVA	3.97				

NOTES:
1. PROVIDE LOCKING HARDWARE
3. 30 ma GFI CIRCUIT BREAKER FOR EQUIPMENT PROTECTION ONLY (HEAT TRACE)
5. BRANCH CIRCUIT WIRING: 3/4"C, 3#12 & 1#12G
7. BRANCH CIRCUIT WIRING: 3/4"C, 2#12 & 1#12G

NOTES CONT.:
2. 5 ma GROUND FAULT INTERRUPTER (GFI) CIRCUIT BREAKER
4. PROVIDE LOCKING HARDWARE & PAINT BREAKER HANDLE RED (FACP)
6. BRANCH CIRCUIT WIRING: 3/4'C, 3#10 & 1#10G
8. BRANCH CIRCUIT WIRING: 3/4'C, 2#8 & 1#8G

PANELBORD LP–DB
SCHEDULE
NTS

LIGHTING FIXTURE SCHEDULE

TYPE	LAMP TYPE / SOURCE	MOUNTING	DESCRIPTION	MAXIMUM WATTAGE COMSUMPTION	MINIMUM LUMEN OUTPUT	VOLTAGE	ACCEPTABLE MANUFACTURER/MODEL	REMARKS
B	LED	PENDANT / SURFACE	INDUSTRIAL LINEAR BAY LIGHT, CRI ABOVE 80, 3500K COLOR TEMPERATURE, DAMP LOCATION LISTED, 4 FOOT LENGTH, WIDE DISTRIBUTION, L70 HOURS = 170,000 @25 DEGREES CELSIUS	33	8839	MVOLT	EATON (METALUX) - 4ILED-LD5-5-W-FL-UNV-L835-CD1-U ACUITY (LITHONIA) HUBBELL INDUSTRIAL	PROVIDE REQUIRED ACCESSORIES FOR PENDANT MOUNTING
BE	LED	PENDANT / SURFACE	INDUSTRIAL LINEAR BAY LIGHT, CRI ABOVE 80, 3500K COLOR TEMPERATURE, DAMP LOCATION LISTED, 4 FOOT LENGTH, WIDE DISTRIBUTION, L70 HOURS = 170,000 @25 DEGREES CELSIUS, EMERGENCY LUMEN OUTPUT MINIMUM - 2170, INTERGRAL 90 MINUTE EMERGENCY BACKUP	33	8839	MVOLT	EATON (METALUX) - 4ILED-LD5-5-W-FL-UNV-L835-EL14W-CD1-U ACUITY (LITHONIA) HUBBELL INDUSTRIAL	PROVIDE REQUIRED ACCESSORIES FOR PENDANT MOUNTING
W	LED	SURFACE	OUTDOOR WALL MOUNTED FIXTURE, CRI =70, 4000K COLOR TEMPERATURE, BRONZE COLOR, WET LOCATION LISTED, INTEGRAL PHOTOCELL, INTEGRAL 90 MINUTE EMERGENCY BACKUP. L70 HOURS =200,000 @ 40 DEGREES CELSIUS	22	2151	120	HUBBELL OUTDOOR - TRP1-12L-20-4K7-4-U-DB-PCU-E ACUITY (LITHONIA) EATON (LUMARK)	
S1	LED	POLE	FIXTURE WITH 20 FEET SQUARE POLE COMBO TYPE SUITABLE FOR OUTDOOR SITE LIGHTING, INTEGRAL PHOTOCELL, 4000K, WET LOCATION LISTED	115	12674	120	HUBBELL-A-12-N-T3-7PR-S20	PROVIDE REQUIRED ACCESSORIES FOR POLE MOUNTING

LIGHTING FIXTURE
SCHEDULE
NTS

STATE OF TEXAS
JOYSON VARGHESE
134792
LICENSED
PROFESSIONAL ENGINEER
12/9/23

REV. NO.	DATE	DRWN	CHKD	REMARKS

DESIGNED BY: K. DINEESH
DRAWN BY: M. VISHNU
SHEET CHK'D BY: J. VARGHESE
CROSS CHK'D BY: S. MEHTA
APPROVED BY: J. VARGHESE
DATE: DECEMBER 2023

CDM Smith
8310-1 N Capital of Texas Hwy, Suite 250
Austin, TX 78731
Tel: (512) 346-1100
TBPELS Firm Registration No. F-3043

CITY OF GEORGETOWN, TEXAS

CEDAR BREAKS AND D B WOOD LIFT STATIONS

CEDAR BREAKS AND DB WOOD LIFT STATION
PANELBOARD AND LIGHTING FIXTURE SCHEDULE

PROJECT NO. 2048–272644
FILE NAME: E008LSPB.DWG
SHEET NO.
E-8

XREFs: [CDMS_2234_South lake to South fork_Border, J. VARGHESE– review stamp, CDMS_2234_ LS_Border] Images: []
Last saved by: VARGHESEJ2 Time: 12/11/2023 11:57:42 AM
pw:\\cdmsmith–a202–pw.bentley.com:pw_pi1\2048\272644\04 Design Services NM_50%\09 Electrical\10 BIM_CADD\E008LSSH.dwg
©2023 CDM SMITH ALL RIGHTS RESERVED.
REUSE OF DOCUMENTS: THESE DOCUMENTS AND DESIGNS PROVIDED BY PROFESSIONAL SERVICE, INCORPORATED HEREIN, ARE THE PROPERTY OF CDM SMITH AND ARE NOT TO BE USED, IN WHOLE OR PART, FOR ANY OTHER PROJECT WITHOUT THE WRITTEN AUTHORIZATION OF CDM SMITH.
Plotted: 12/13/2023 3:29:24 PM

GENERAL NOTES:

1. LOCATION OF GROUNDING LOOP SHALL BE AT A MINIMUM OF 30" FROM ANY FOUNDATION WALLS AND COLUMNS. GROUNDING LOOP SHALL BE BURIED 30" BELOW GRADE LEVEL.

KEY NOTES:

1. BOND #4/0 BARE COPPER WIRE TO STRUCTURAL STEEL.
2. BOND #4/0 BARE COPPER WIRE TO EQUIPMENT ENCLOSURE.

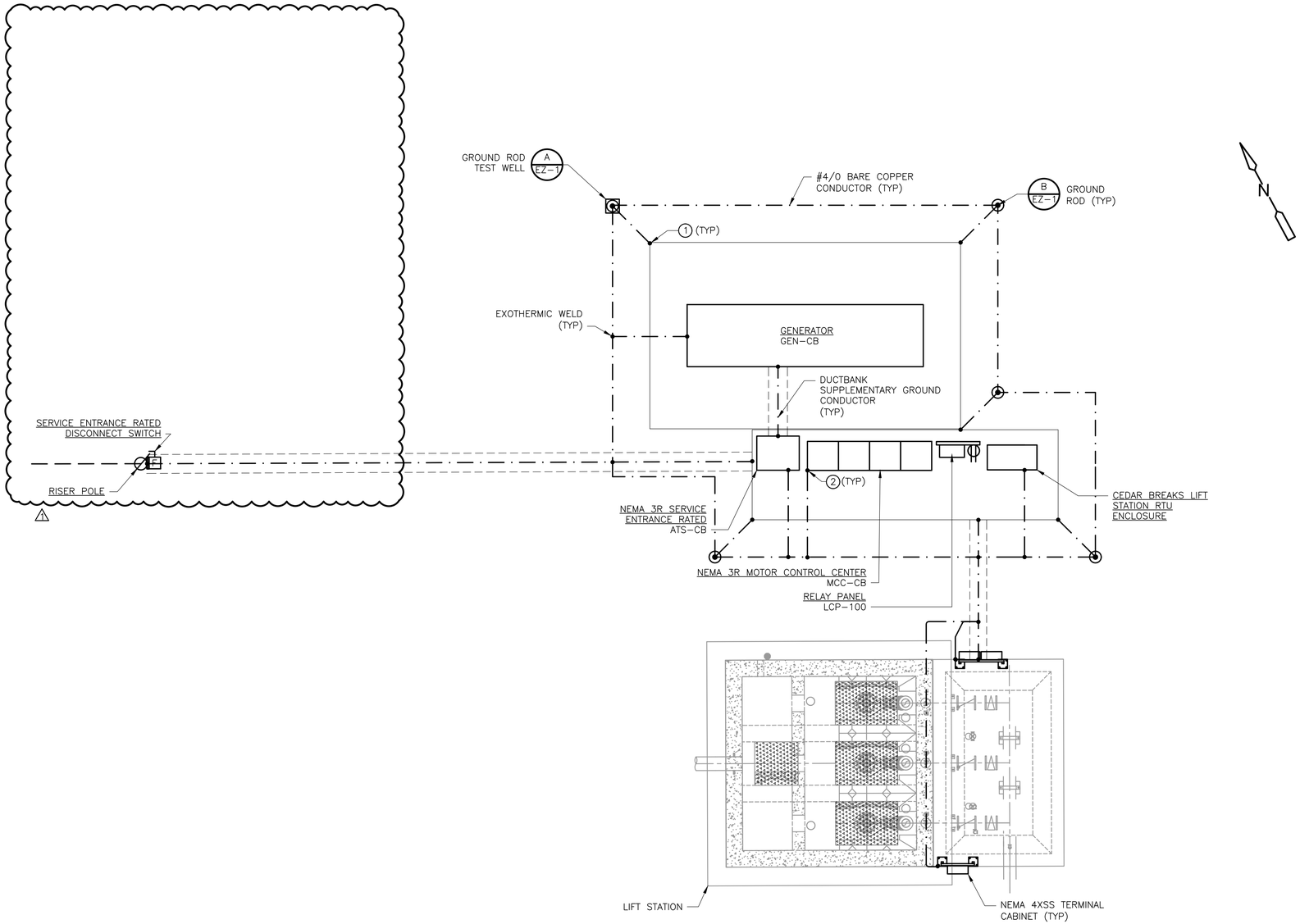

CEDAR BREAKS LIFT STATION ELECTRICAL SITE GROUNDING

PLAN

1" = 5'

2.5 0 5

STATE OF TEXAS
JOYSON VARGHESE
134792
LICENSED
PROFESSIONAL ENGINEER
1/18/24

REV. NO.	DATE	DRWN	CHKD	REMARKS
1	1/18/24	JV	JV	ADDENDUM NO.3

DESIGNED BY: K. DINEESH
DRAWN BY: M. VISHNU
SHEET CHK'D BY: J. VARGHESE
CROSS CHK'D BY: S. MEHTA
APPROVED BY: J. VARGHESE
DATE: JANUARY 2024

CDM Smith
8310-1 N Capital of Texas Hwy, Suite 250
Austin, TX 78731
Tel: (512) 346-1100
TBPELS Firm Registration No. F-3043

CITY OF GEORGETOWN, TEXAS

CEDAR BREAKS AND D B WOOD LIFT STATIONS

CEDAR BREAKS LIFT STATION
ELECTRICAL SITE GROUNDING

PROJECT NO. 2048-272644
FILE NAME: E009LSPL.DWG

SHEET NO.
E-9

XREFs: [CDMS_2234_South lake to South fork_Border, J. VARGHESE- review stamp, EWP002ST, EWP001ST, CEP000SS_do not use, CEP002SS, CEZ001SV, CWP003ST, MWP001LS, SWP000LS, SWP001LS, CDMS_2234_ LS_Border] Images: []
Last saved by: VARGHESEJ2 Time: 1/18/2024 2:27:54 PM
pw:\\cdmsmith-az02-pw.bentley.com:pw_pi1\2048\272644\04 Design Services NM_50%\09 Electrical\10 BIM_CADD\E009LSPL.dwg
© 2023 CDM SMITH ALL RIGHTS RESERVED.
REUSE OF DOCUMENTS: THESE DOCUMENTS AND DESIGNS PROVIDED BY PROFESSIONAL SERVICE, INCORPORATED HEREIN, ARE THE PROPERTY OF CDM SMITH AND ARE NOT TO BE USED, IN WHOLE OR PART, FOR ANY OTHER PROJECT WITHOUT THE WRITTEN AUTHORIZATION OF CDM SMITH.
Plotted: 1/18/2024 2:37:41 PM

KEY NOTES:

1. PROVIDE TRIP HAZARD PROTECTION FOR PUMP CABLES ROUTED TO WETWELL.

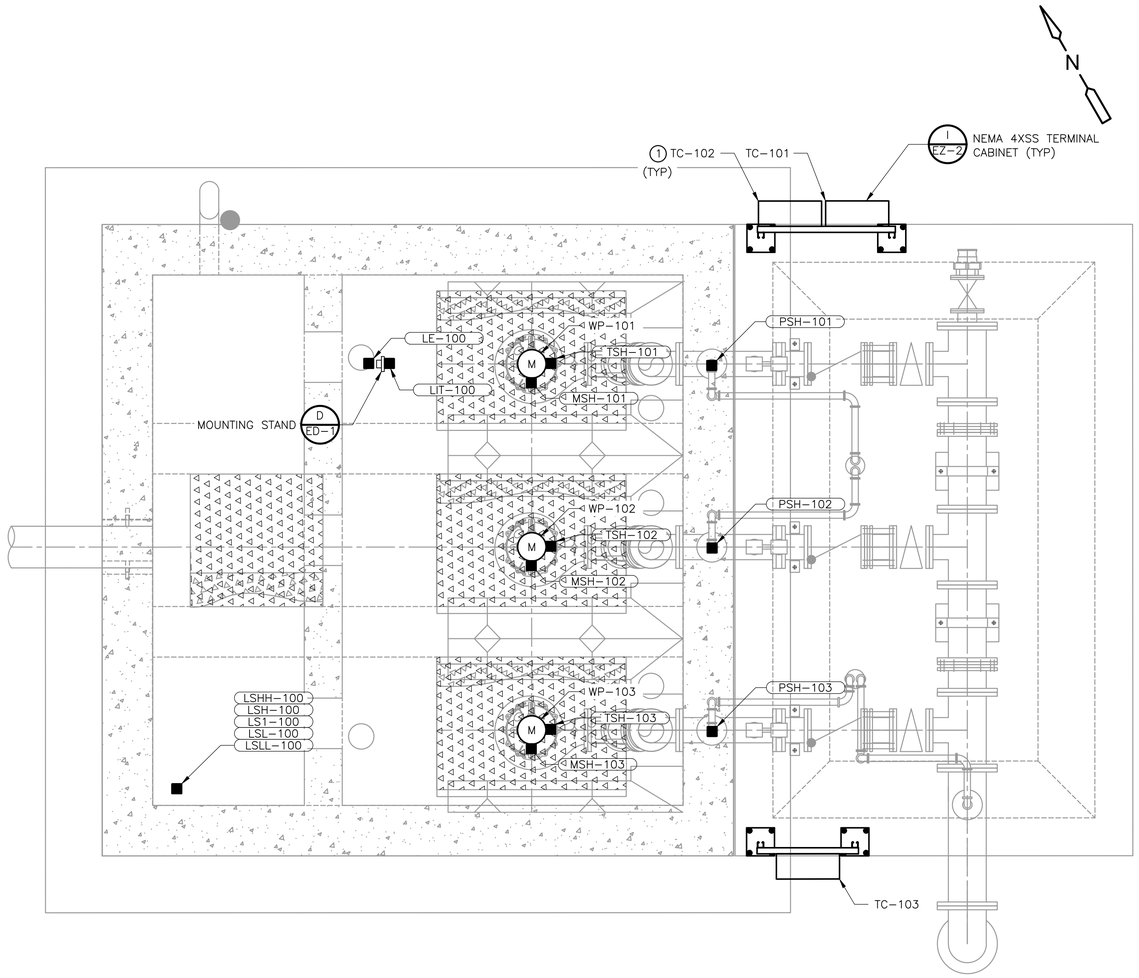

CEDAR BREAKS LIFT STATION ELECTRICAL

PLAN

1/2" = 1'- 0"

1 0 1 2

STATE OF TEXAS
JOYSON VARGHESE
134792
LICENSED
PROFESSIONAL ENGINEER
12/9/23

REV. NO.	DATE	DRWN	CHKD	REMARKS

DESIGNED BY: K. DINEESH
DRAWN BY: M. VISHNU
SHEET CHK'D BY: J. VARGHESE
CROSS CHK'D BY: S. MEHTA
APPROVED BY: J. VARGHESE
DATE: DECEMBER 2023

CDM Smith
8310-1 N Capital of Texas Hwy, Suite 250
Austin, TX 78731
Tel: (512) 346-1100
TBPELS Firm Registration No. F-3043

CITY OF GEORGETOWN, TEXAS

CEDAR BREAKS AND D B WOOD LIFT STATIONS

CEDAR BREAKS LIFT STATION
ELECTRICAL PLAN

PROJECT NO. 2048-272644
FILE NAME: E010LSPL.DWG

SHEET NO.
E-10

Plotted: 12/13/2023 3:04:22 PM

XREFs: [CDMS_2234_South lake to South fork_Border, J. VARGHESE- review stamp, MWP001LS, SWP001LS, SWP000LS, CDMS_2234_ LS_Border] Images: []
Last saved by: VARGHESEJ2 Time: 12/11/2023 11:53:28 AM
pw:\\cdmsmith-azc2-pw.bentley.com:pw_pi\2048\272644\04 Design Services NM_50%\09 Electrical\10 BIM_CADD\E010LSPL.dwg
©2023 CDM SMITH ALL RIGHTS RESERVED.
REUSE OF DOCUMENTS: THESE DOCUMENTS AND DESIGNS PROVIDED BY PROFESSIONAL SERVICE, INCORPORATED HEREIN, ARE THE PROPERTY OF CDM SMITH AND ARE NOT TO BE USED, IN WHOLE OR PART, FOR ANY OTHER PROJECT WITHOUT THE WRITTEN AUTHORIZATION OF CDM SMITH.

GENERAL NOTES:

1. FINAL EQUIPMENT LAYOUT SHALL BE COORDINATED WITH E-HOUSE MANUFACTURER.
2. LOCATION OF GROUNDING LOOP SHALL BE AT A MINIMUM OF 30" FROM ANY FOUNDATION WALLS AND COLUMNS. GROUNDING LOOP SHALL BE BURIED 30" BELOW GRADE LEVEL.

KEY NOTES:

1. BOND #4/0 BARE COPPER WIRE TO STRUCTURAL STEEL.
2. BOND #4/0 BARE COPPER WIRE TO EQUIPMENT ENCLOSURE.
3. COIL 6' WIRE FOR CONNECTION TO FUTURE PUMP AND EQUIPMENT.
4. E-HOUSE MANUFACTURER TO PROVIDE SPACE FOR INSTALLING FUTURE 215HP SSRVS.
5. COORDINATE WITH DIVISION 40 CONTRACTOR FOR FINAL EQUIPMENT DIMENSION.

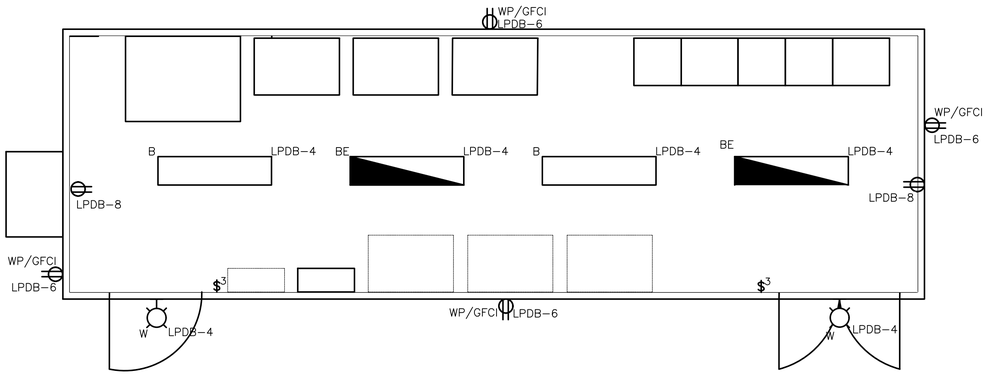

D B WOOD LIFT STATION E-HOUSE LIGHTING AND RECEPTACLE PLAN

3/8" = 1'- 0"

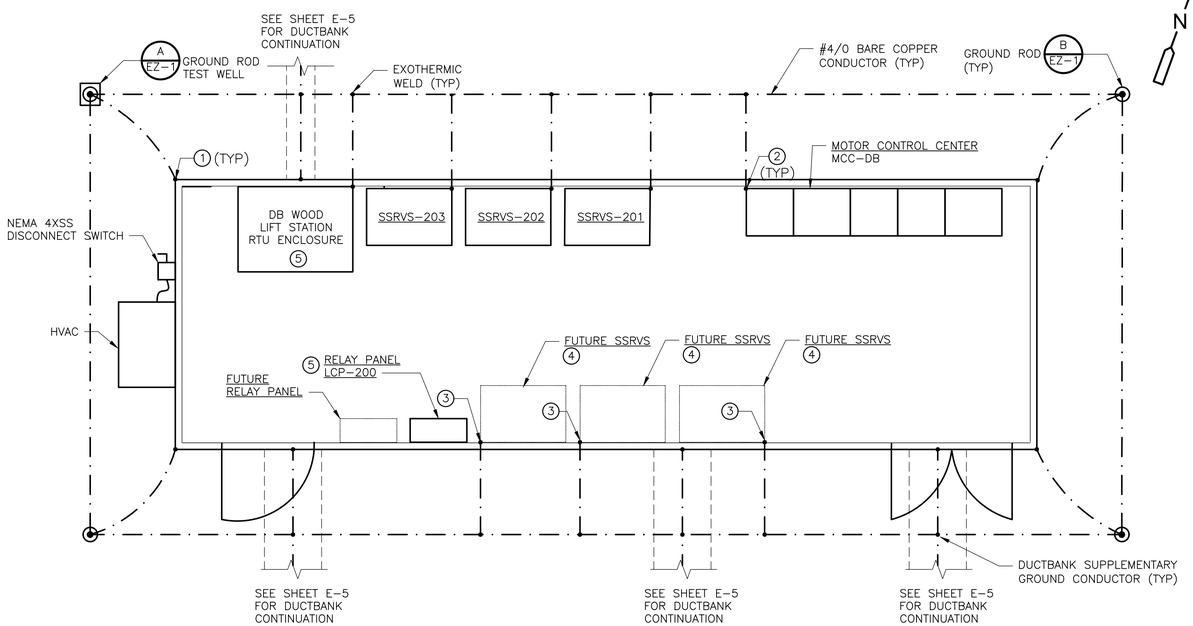

D B WOOD LIFT STATION E-HOUSE POWER AND GROUNDING PLAN

3/8" = 1'- 0"

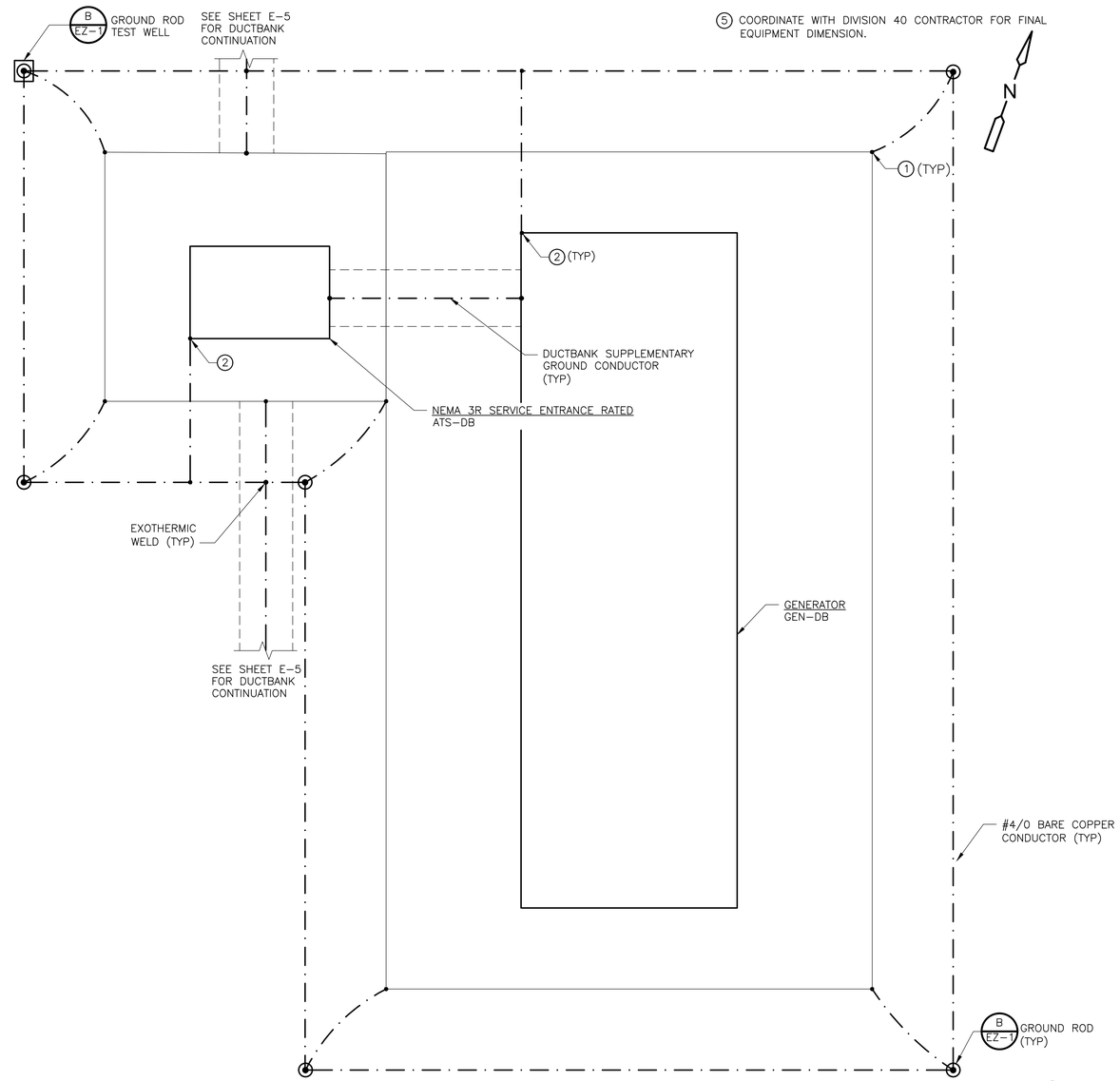

D B WOOD LIFT STATION GENERATOR GROUNDING PLAN

3/8" = 1'- 0"

STATE OF TEXAS
JOYSON VARGHESE
134792
LICENSED PROFESSIONAL ENGINEER
12/9/23

REV. NO.	DATE	DRWN	CHKD	REMARKS

DESIGNED BY: K. DINEESH
DRAWN BY: M. VISHNU
SHEET CHK'D BY: J. VARGHESE
CROSS CHK'D BY: S. MEHTA
APPROVED BY: J. VARGHESE
DATE: DECEMBER 2023

CDM Smith
8310-1 N Capital of Texas Hwy, Suite 250
Austin, TX 78731
Tel: (512) 346-1100
TBPELS Firm Registration No. F-3043

CITY OF GEORGETOWN, TEXAS

CEDAR BREAKS AND D B WOOD LIFT STATIONS

D B WOOD LIFT STATION
EHOUSE AND GENERATOR POWER
AND GROUNDING PLAN

PROJECT NO. 2048-272644
FILE NAME: E011LSPL.DWG
SHEET NO.
E-11

XREFs: [CDMS_2234_South Iake to South fork_Border; J. VARGHESE- review stamp; CDMS-003-SF INTERCEPTOR BRIDGE-FINAL-REV2; EWP002ST; _u] Images: []
Last saved by: VARGHESEJ2 Time: 12/11/2023 11:57:01 AM
pw:\\cdmsmith-pw02-pw.bentley.com:pw_pf1\2048\272644\04 Design Services NM_50%\09 Electrical\10 BIM_CADD\E011LSPL.dwg
©2023 CDM SMITH ALL RIGHTS RESERVED
REUSE OF DOCUMENTS: THESE DOCUMENTS AND DESIGNS PROVIDED BY PROFESSIONAL SERVICE, INCORPORATED HEREIN, ARE THE PROPERTY OF CDM SMITH AND ARE NOT TO BE USED, IN WHOLE OR PART, FOR ANY OTHER PROJECT WITHOUT THE WRITTEN AUTHORIZATION OF CDM SMITH.
Plotted: 12/13/2023 3:04:25 PM

KEY NOTES:

1. PROVIDE TRIP HAZARD PROTECTION FOR PUMP CABLES ROUTED TO WETWELL.

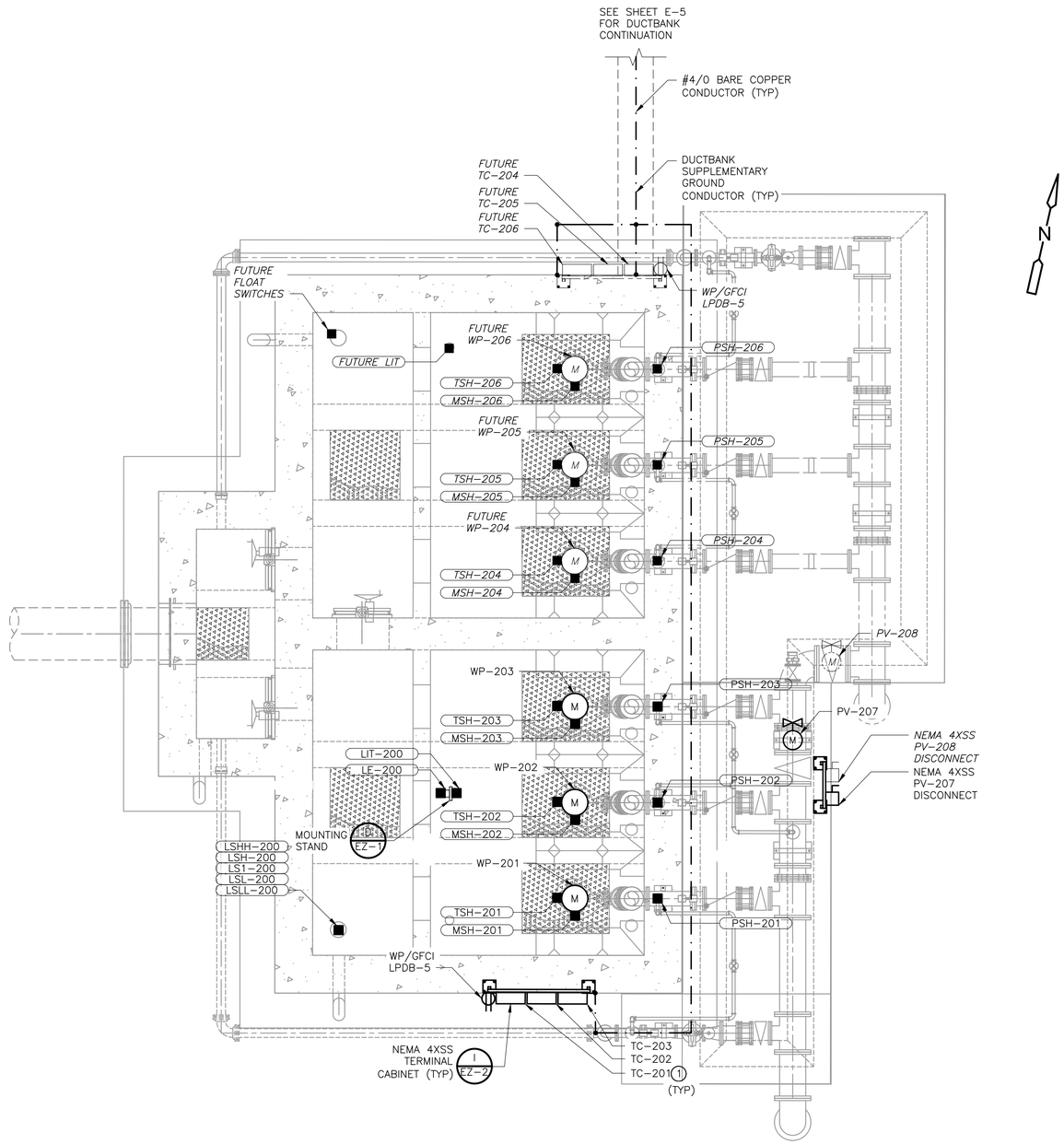

D B WOOD LIFT STATION ELECTRICAL

PLAN

1/4" = 1'- 0"

2 1 0 2 4

STATE OF TEXAS
JOYSON VARGHESE
134792
LICENSED PROFESSIONAL ENGINEER
12/9/23

REV. NO.	DATE	DRWN	CHKD	REMARKS

DESIGNED BY: K. DINEESH
DRAWN BY: M. VISHNU
SHEET CHK'D BY: J. VARGHESE
CROSS CHK'D BY: S. MEHTA
APPROVED BY: J. VARGHESE
DATE: DECEMBER 2023

CDM Smith
8310-1 N Capital of Texas Hwy, Suite 250
Austin, TX 78731
Tel: (512) 346-1100
TBPELS Firm Registration No. F-3043

CITY OF GEORGETOWN, TEXAS

CEDAR BREAKS AND D B WOOD LIFT STATIONS

D B WOOD LIFT STATION ELECTRICAL PLAN

PROJECT NO. 2048-272644
FILE NAME: E012LSPL.DWG

SHEET NO.
E-12

XREFs: [CDMS_2234_South lake to South fork_Border, J. VARGHESE- review stamp, MWP002LS, SWP002LS, SWP004LS, CDMS_2234_ LS_Border] Images: []
Last saved by: VARGHESEJ2 Time: 12/11/2023 11:56:46 AM
pw:\\cdmsmith-azo2-pw.bentley.com:pw_pt\2048\272644\04 Design Services NM_50%\09 Electrical\10 BIM_CADD\E012LSPL.dwg
© 2023 CDM SMITH ALL RIGHTS RESERVED.
REUSE OF DOCUMENTS: THESE DOCUMENTS AND DESIGNS PROVIDED BY PROFESSIONAL SERVICE, INCORPORATED HEREIN, ARE THE PROPERTY OF CDM SMITH AND ARE NOT TO BE USED, IN WHOLE OR PART, FOR ANY OTHER PROJECT WITHOUT THE WRITTEN AUTHORIZATION OF CDM SMITH.

Plotted: 12/13/2023 3:04:28 PM

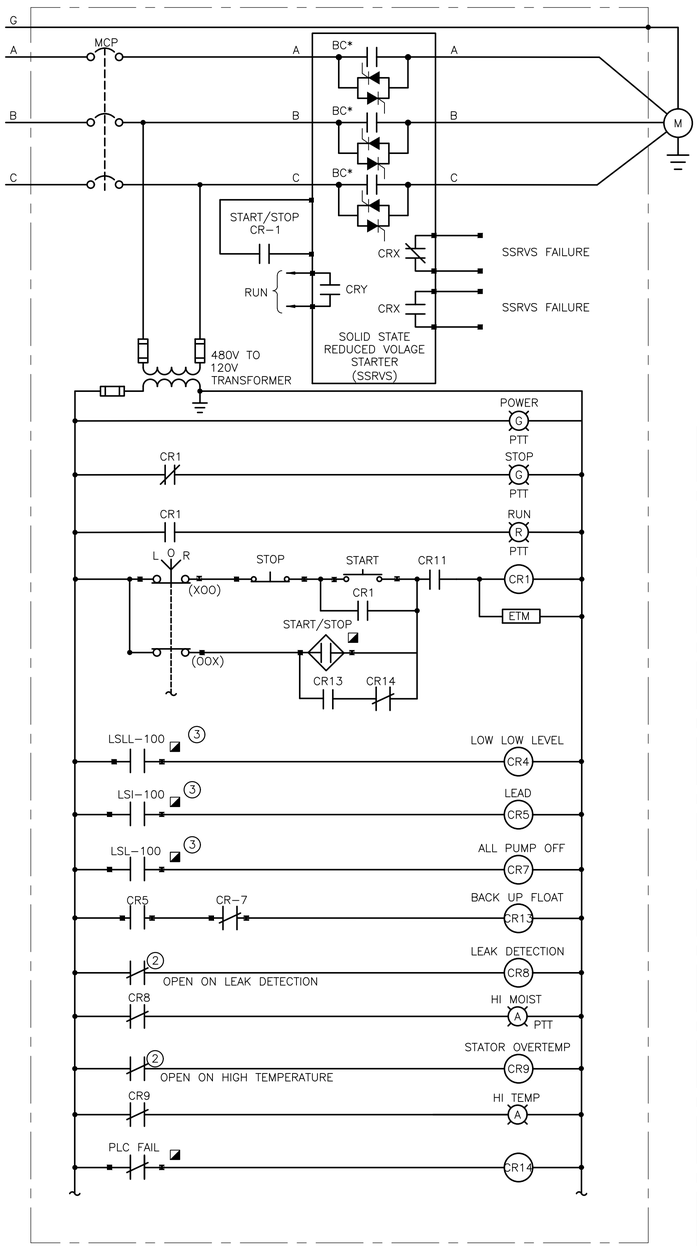

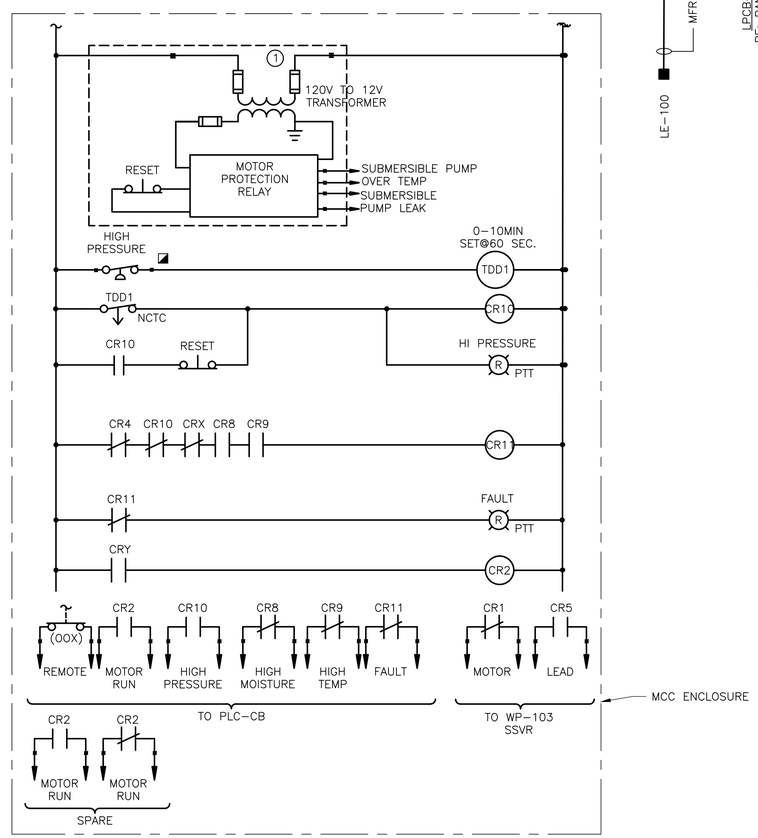

WP-101	MSH-101	TSH-101	PSH-101

SSRVS-101
SUBMERSIBLE SEWAGE PUMP WP-101

SCHEMATIC 1/–

KEY NOTES

1. MOTOR PROTECTION RELAY PROVIDED BY PUMP MANUFACTURER.
2. CONTACT FROM MOTOR PROTECTION RELAY. COORDINATE RELAY LOGIC WITH SUBMITTED PUMP RELAY. REVISE SCHEMATIC AS REQUIRED.
3. CONTACT FROM RELAY PANEL LRP-100.

SCHEMATIC LEGEND

- EXTERNAL DEVICE TERMINAL CONNECTIONS
- DEVICE LOCATED IN FIELD

ON (R) PUSH-TO-TEST LED PILOT LIGHT
PTT

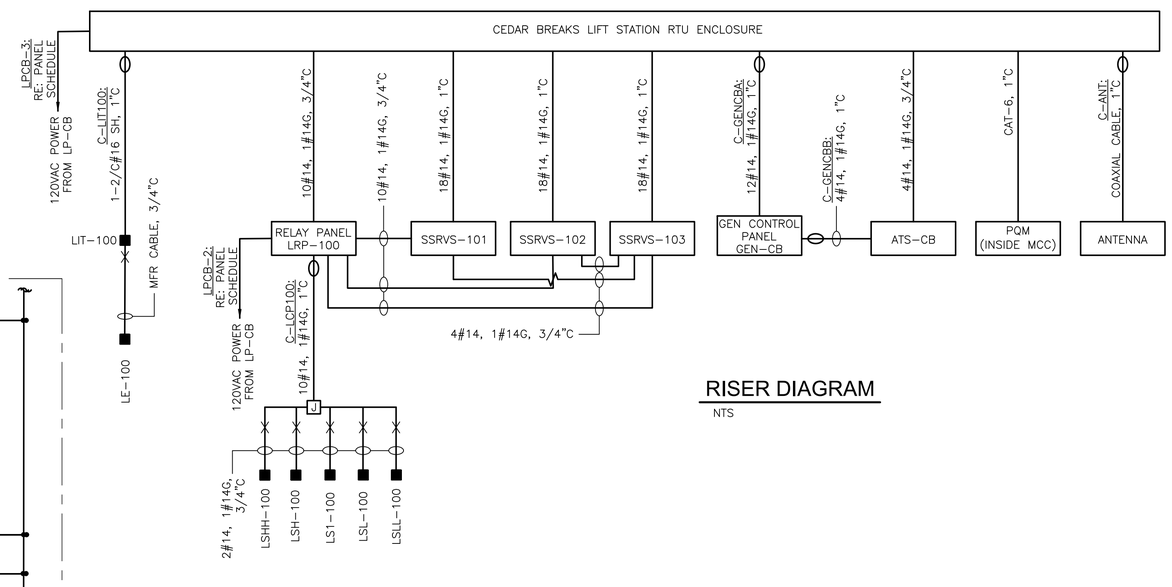

RISER DIAGRAM

NTS

REV. NO.	DATE	DRWN	CHKD	REMARKS

DESIGNED BY: K. DINEESH
DRAWN BY: K. DINEESH
SHEET CHK'D BY: J. VARGHESE
CROSS CHK'D BY: S. MEHTA
APPROVED BY: J. VARGHESE
DATE: DECEMBER 2023

CDM Smith
8310-1 N Capital of Texas Hwy, Suite 250
Austin, TX 78731
Tel: (512) 346-1100
TBPELS Firm Registration No. F-3043

CITY OF GEORGETOWN, TEXAS

CEDAR BREAKS AND D B WOOD LIFT STATIONS

CEDAR BREAKS LIFT STATION
SCHEMATIC I AND RISER DIAGRAM

PROJECT NO. 2048-272644
FILE NAME: E013LSRD.DWG
SHEET NO. E-13

XREF's: [CDMS_2234_South lake to South fork_Border_J. VARGHESE- review stamp, CDMS_2234_ LS_Border] Images: []
Last saved by: VARGHESEJ2 Time: 12/11/2023 11:55:46 AM
pw:\\cdmsmith-az02-pw.bentley.com:pw_pll\2048\272644\04 Design Services NM_50%\09 Electrical\10 BIM_CADD\E013LSRD.dwg
© 2023 CDM SMITH ALL RIGHTS RESERVED.
REUSE OF DOCUMENTS: THESE DOCUMENTS AND DESIGNS PROVIDED BY PROFESSIONAL SERVICE, INCORPORATED HEREIN, ARE THE PROPERTY OF CDM SMITH AND ARE NOT TO BE USED, IN WHOLE OR PART, FOR ANY OTHER PROJECT WITHOUT THE WRITTEN AUTHORIZATION OF CDM SMITH.
Plotted: 12/13/2023 3:04:31 PM

KEY NOTES

1. MOTOR PROTECTION RELAY PROVIDED BY PUMP MANUFACTURER.
2. CONTACT FROM MOTOR PROTECTION RELAY. COORDINATE RELAY LOGIC WITH SUBMITTED PUMP RELAY. REVISE SCHEMATIC AS REQUIRED.
3. CONTACT FROM RELAY PANEL LRP–100.

SCHEMATIC LEGEND

- ▪ EXTERNAL DEVICE TERMINAL CONNECTIONS
- ◪ DEVICE LOCATED IN FIELD
- ON (R) PUSH–TO–TEST LED PILOT LIGHT
  PTT

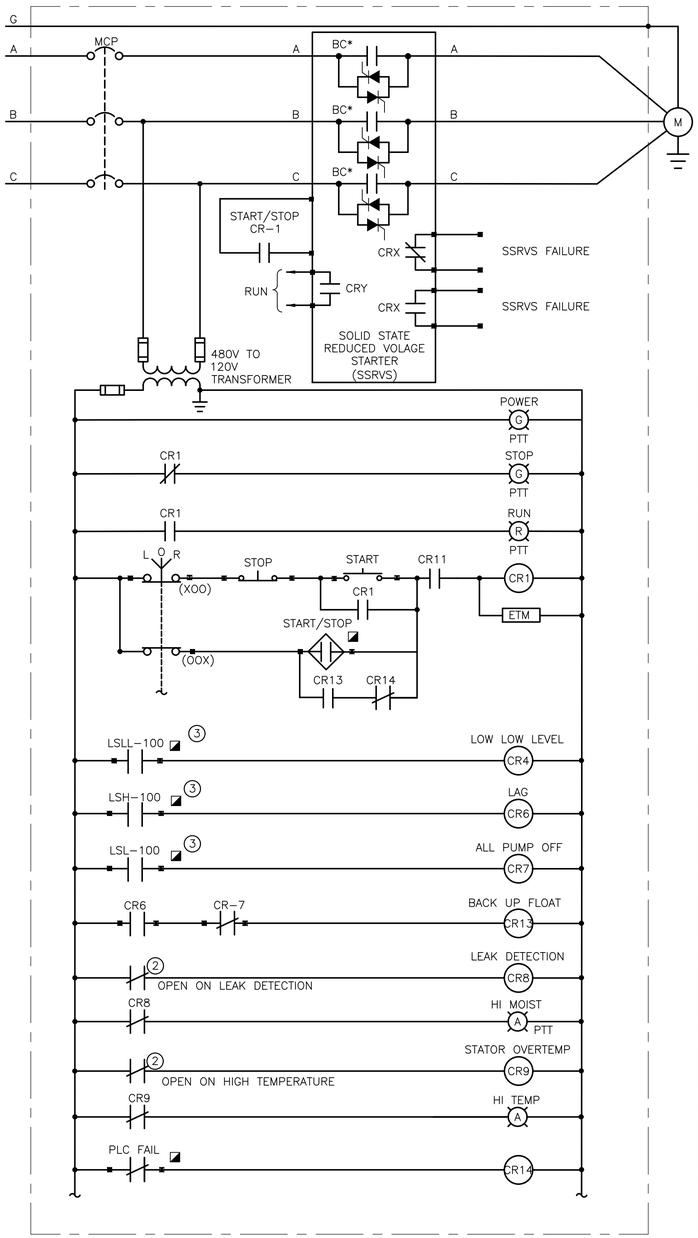

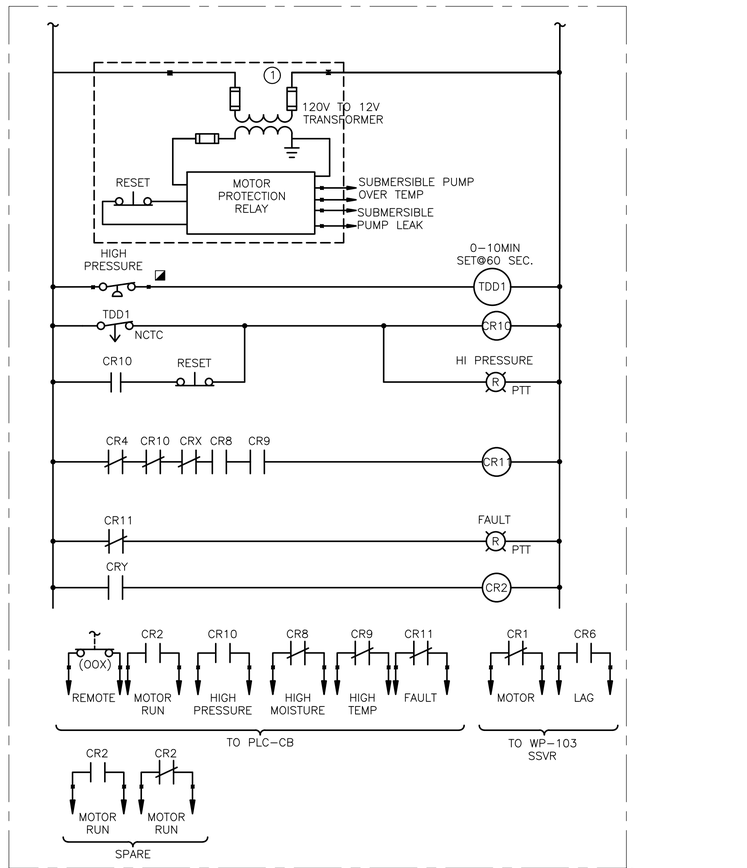

WP–102	MSH–102	TSH–102	PSH–102

SSRVS–102
SUBMERSIBLE SEWAGE PUMP WP–102

SCHEMATIC 1 / –

STATE OF TEXAS
JOYSON VARGHESE
134792
LICENSED
PROFESSIONAL ENGINEER
12/9/23

REV. NO.	DATE	DRWN	CHKD	REMARKS

DESIGNED BY: VISHNU M
DRAWN BY: VISHNU M
SHEET CHK'D BY: J. VARGHESE
CROSS CHK'D BY: S. MEHTA
APPROVED BY: J. VARGHESE
DATE: DECEMBER 2023

CDM Smith
8310-1 N Capital of Texas Hwy, Suite 250
Austin, TX 78731
Tel: (512) 346-1100
TBPELS Firm Registration No. F-3043

CITY OF GEORGETOWN, TEXAS

CEDAR BREAKS AND D B WOOD LIFT STATIONS

CEDAR BREAKS LIFT STATION
SCHEMATIC II

PROJECT NO. 2048–272644
FILE NAME: E014LSRD.DWG
SHEET NO.
E-14

XREFs: [CDMS_2234_South lake to South fork_Border, J. VARGHESE– review stamp, CDMS_2234_ LS_Border] Images: []
Last saved by: VARGHESEJ2 Time: 12/11/2023 11:55:30 AM
pw:\\cdmsmith–a202–pw.bentley.com:pw_pi1\2048\272644\04 Design Services NM_50%\09 Electrical\10 BIM_CADD\E014LSRD.dwg
© 2023 CDM SMITH ALL RIGHTS RESERVED.
REUSE OF DOCUMENTS: THESE DOCUMENTS AND DESIGNS PROVIDED BY PROFESSIONAL SERVICE, INCORPORATED HEREIN, ARE THE PROPERTY OF CDM SMITH. ARE NOT TO BE USED, IN WHOLE OR PART, FOR ANY OTHER PROJECT WITHOUT THE WRITTEN AUTHORIZATION OF CDM SMITH.

Plotted: 12/13/2023 3:04:33 PM

KEY NOTES

1. MOTOR PROTECTION RELAY PROVIDED BY PUMP MANUFACTURER.
2. CONTACT FROM MOTOR PROTECTION RELAY. COORDINATE RELAY LOGIC WITH SUBMITTED PUMP RELAY. REVISE SCHEMATIC AS REQUIRED.
3. CONTACT FROM RELAY PANEL LRP–100.

SCHEMATIC LEGEND

- ▪ EXTERNAL DEVICE TERMINAL CONNECTIONS
- ◪ DEVICE LOCATED IN FIELD
- ON (R) PUSH–TO–TEST LED PILOT LIGHT PTT

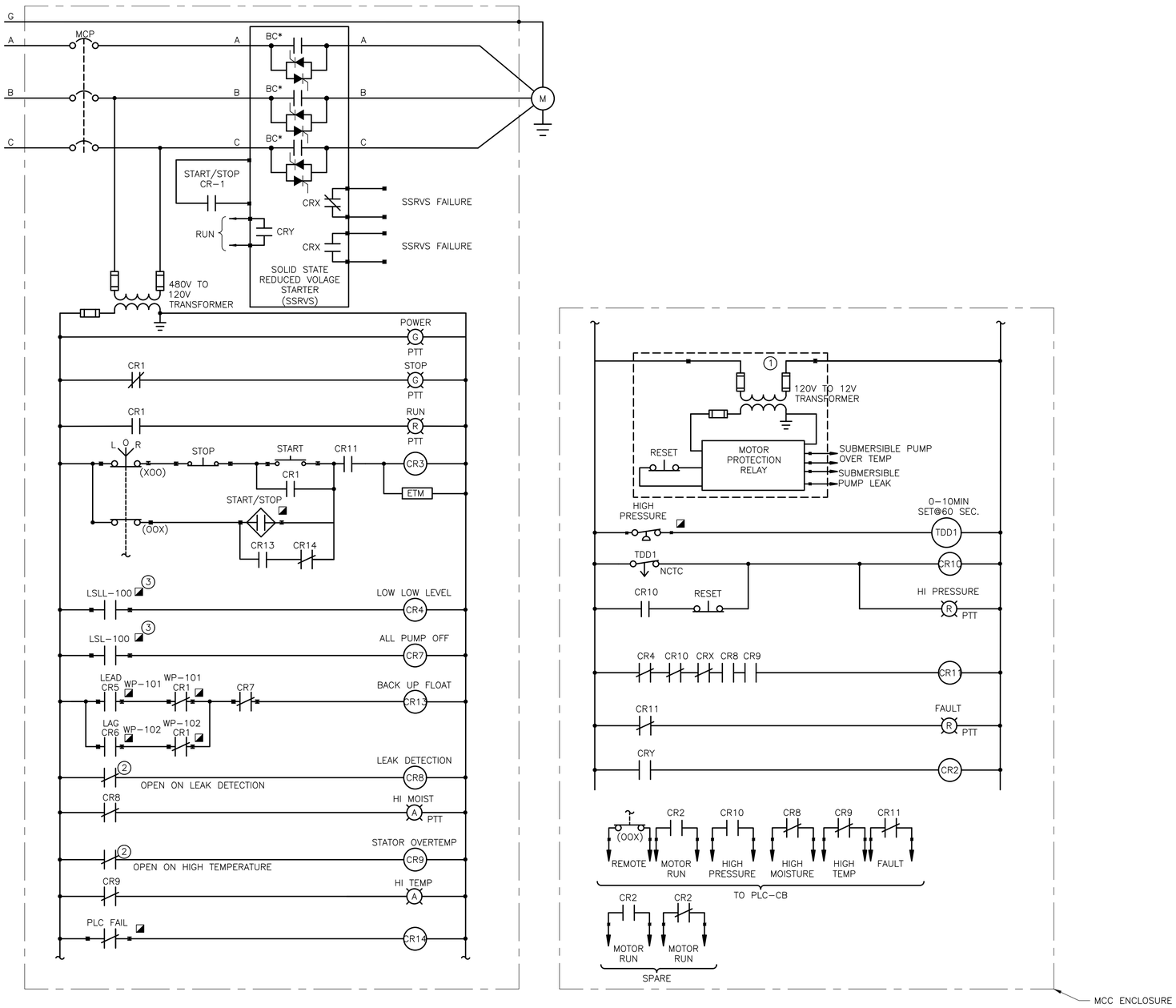

SSRVS–103
SUBMERSIBLE SEWAGE PUMP WP–103

SCHEMATIC 1 / –

WP–103	MSH–103	TSH–103	PSH–103

STATE OF TEXAS
JOYSON VARGHESE
134792
LICENSED
PROFESSIONAL ENGINEER
12/9/23

REV. NO.	DATE	DRWN	CHKD	REMARKS

DESIGNED BY: VISHNU M
DRAWN BY: VISHNU M
SHEET CHK'D BY: J. VARGHESE
CROSS CHK'D BY: S. MEHTA
APPROVED BY: J. VARGHESE
DATE: DECEMBER 2023

CDM Smith
8310-1 N Capital of Texas Hwy, Suite 250
Austin, TX 78731
Tel: (512) 346-1100
TBPELS Firm Registration No. F-3043

CITY OF GEORGETOWN, TEXAS

CEDAR BREAKS AND D B WOOD LIFT STATIONS

CEDAR BREAKS LIFT STATION
SCHEMATIC III

PROJECT NO. 2048–272644
FILE NAME: E015LSRD.DWG
SHEET NO.
E-15

XREFs: [CDMS_2234_South lake to South fork_Border, J. VARGHESE– review stamp, CDMS_2234_ LS_Border] Images: []
Last saved by: VARGHESEJ2 Time: 12/11/2023 11:55:19 AM
pw:\\cdmsmith–a02–pw.bentley.com:pw_pt\2048\272644\04 Design Services NM_50ft\09 Electrical\10 BIM_CADD\E015LSRD.dwg
© 2023 CDM SMITH ALL RIGHTS RESERVED.
REUSE OF DOCUMENTS: THESE DOCUMENTS AND DESIGNS PROVIDED BY PROFESSIONAL SERVICE, INCORPORATED HEREIN, ARE THE PROPERTY OF CDM SMITH AND ARE NOT TO BE USED, IN WHOLE OR PART, FOR ANY OTHER PROJECT WITHOUT THE WRITTEN AUTHORIZATION OF CDM SMITH.

Plotted: 12/13/2023 3:04:35 PM

KEY NOTES

1. MOTOR PROTECTION RELAY PROVIDED BY PUMP MANUFACTURER.
2. CONTACT FROM MOTOR PROTECTION RELAY. COORDINATE RELAY LOGIC WITH SUBMITTED PUMP RELAY. REVISE SCHEMATIC AS REQUIRED.
3. CONTACT FROM RELAY PANEL LRP-200.
4. STUB UP AND CAP CONDUITS AT BOTH ENDS FOR FUTURE USE.

SCHEMATIC LEGEND

- ▪ EXTERNAL DEVICE TERMINAL CONNECTIONS
- ◪ DEVICE LOCATED IN FIELD
- ON (R) PUSH-TO-TEST LED PILOT LIGHT
- PTT

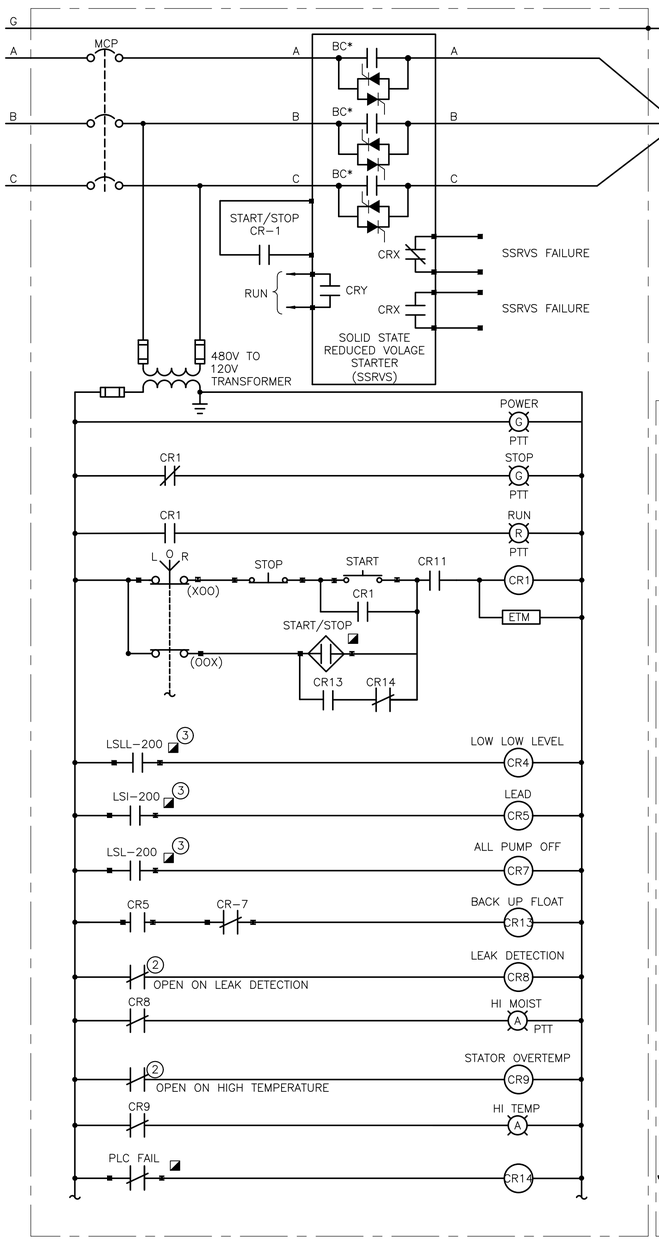

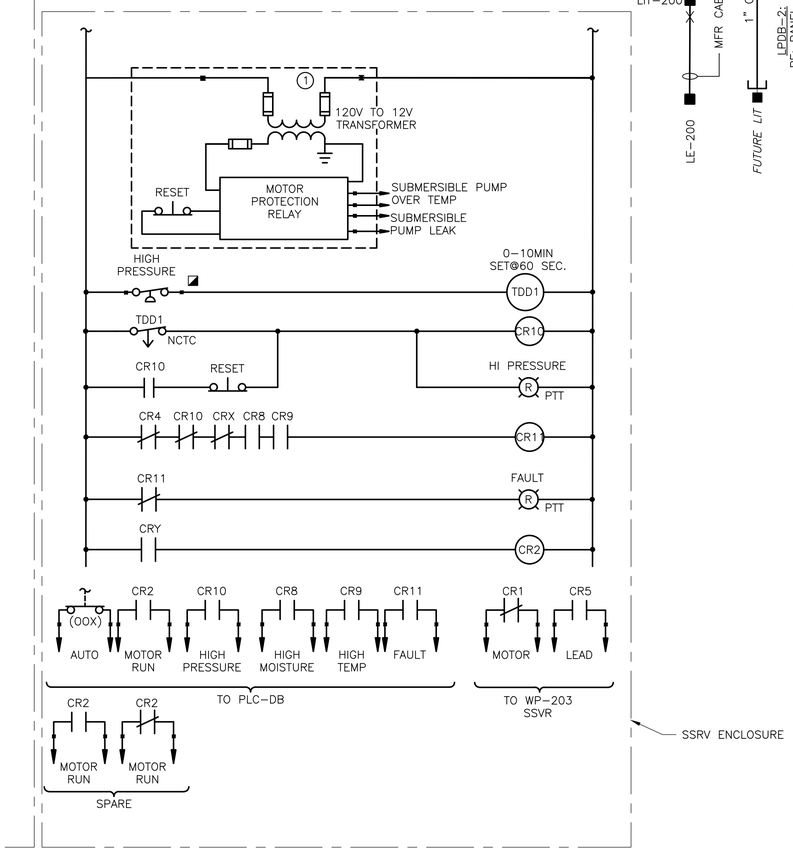

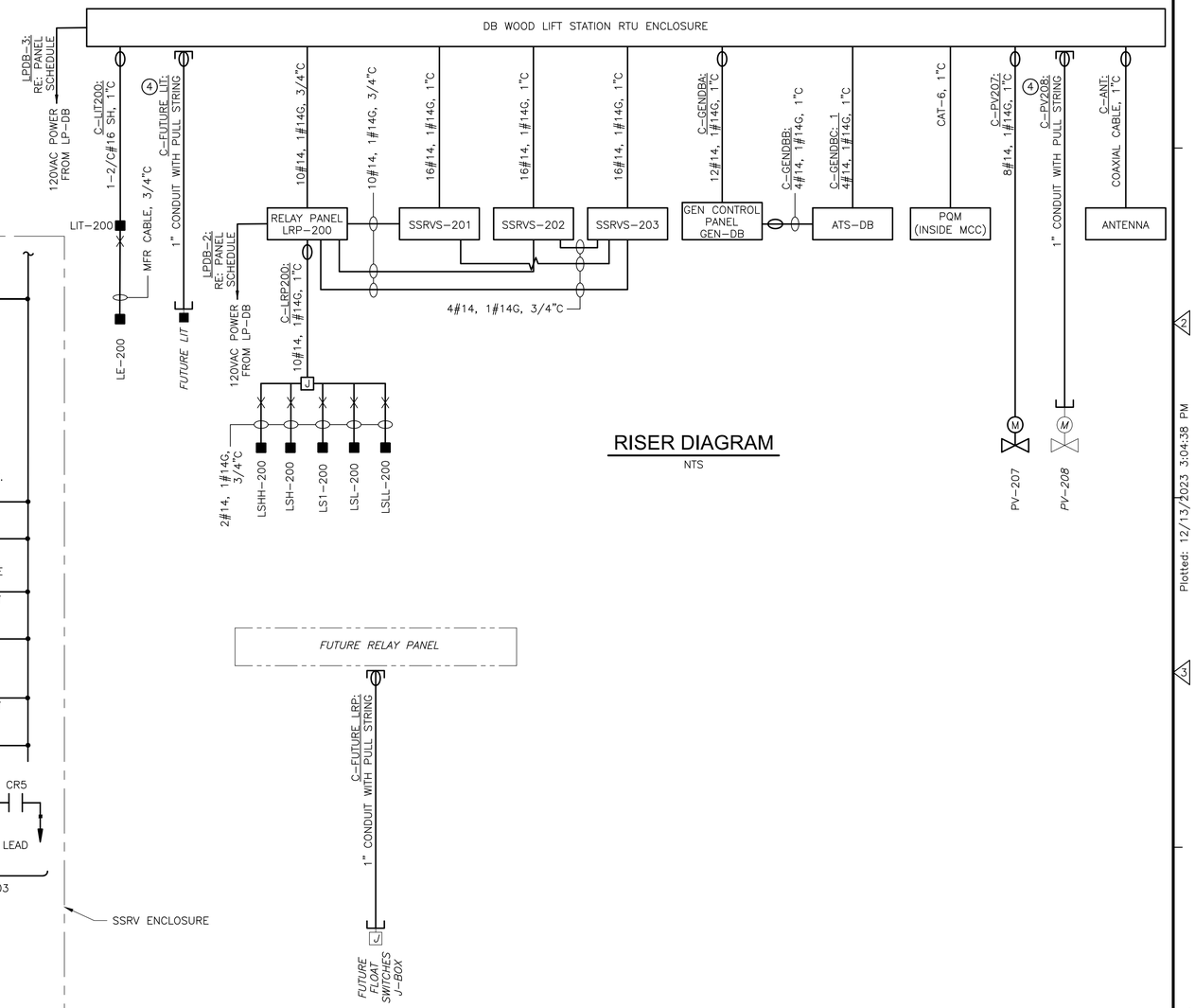

RISER DIAGRAM

NTS

SSRVS-201
SUBMERSIBLE SEWAGE PUMP WP-201

SCHEMATIC 1 / -

WP-201	MSH-201	TSH-201	PSH-201

STATE OF TEXAS — JOYSON VARGHESE — 134792 — LICENSED PROFESSIONAL ENGINEER — 12/9/23

REV. NO.	DATE	DRWN	CHKD	REMARKS

DESIGNED BY: K. DINEESH
DRAWN BY: K. DINEESH
SHEET CHK'D BY: J. VARGHESE
CROSS CHK'D BY: S. MEHTA
APPROVED BY: J. VARGHESE
DATE: DECEMBER 2023

CDM Smith
8310-1 N Capital of Texas Hwy, Suite 250
Austin, TX 78731
Tel: (512) 346-1100
TBPELS Firm Registration No. F-3043

CITY OF GEORGETOWN, TEXAS

CEDAR BREAKS AND D B WOOD LIFT STATIONS

DB WOOD LIFT STATION
SCHEMATIC I AND RISER DIAGRAM

PROJECT NO. 2048-272644
FILE NAME: E016LSRD.DWG
SHEET NO.
E-16

XREFs: [CDMS_2234_South Iole to South fork_Border, J. VARGHESE- review stamp, CDMS_2234_ LS_Border] Images: []
Last saved by: VARGHESEJ2 Time: 12/11/2023 11:55:05 AM
pw:\\cdmsmith-a202-pw.bentley.com:pw_pl1\2048\272644\04 Design Services NM_50%\09 Electrical\10 BIM_CADD\E016LSRD.dwg
©2023 CDM SMITH ALL RIGHTS RESERVED.
REUSE OF DOCUMENTS: THESE DOCUMENTS AND DESIGNS PROVIDED BY PROFESSIONAL SERVICE, INCORPORATED HEREIN, ARE THE PROPERTY OF CDM SMITH. OF CDM SMITH AND ARE NOT TO BE USED, IN WHOLE OR PART, FOR ANY OTHER PROJECT WITHOUT THE WRITTEN AUTHORIZATION OF CDM SMITH.

Plotted: 12/13/2023 3:04:38 PM

KEY NOTES

1. MOTOR PROTECTION RELAY PROVIDED BY PUMP MANUFACTURER.
2. CONTACT FROM MOTOR PROTECTION RELAY. COORDINATE RELAY LOGIC WITH SUBMITTED PUMP RELAY. REVISE SCHEMATIC AS REQUIRED.
3. CONTACT FROM RELAY PANEL LRP–200.

SCHEMATIC LEGEND

- ▪ EXTERNAL DEVICE TERMINAL CONNECTIONS
- ◪ DEVICE LOCATED IN FIELD
- ON (R) PUSH–TO–TEST LED PILOT LIGHT
- PTT

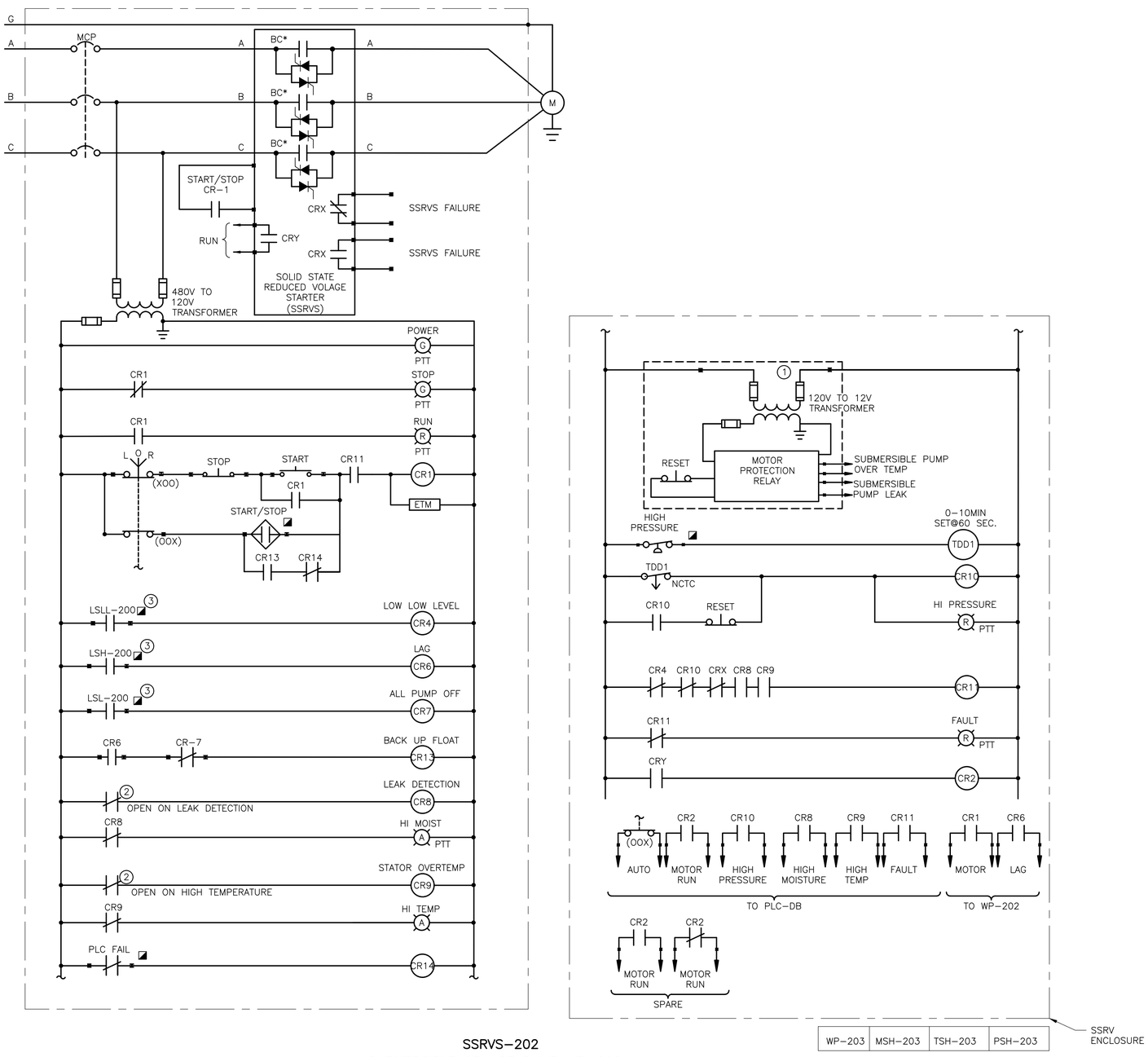

SSRVS–202
SUBMERSIBLE SEWAGE PUMP WP–202

SCHEMATIC 1/–

STATE OF TEXAS
JOYSON VARGHESE
134792
LICENSED
PROFESSIONAL ENGINEER
12/9/23

REV. NO.	DATE	DRWN	CHKD	REMARKS

DESIGNED BY: VISHNU M
DRAWN BY: VISHNU M
SHEET CHK'D BY: J. VARGHESE
CROSS CHK'D BY: S. MEHTA
APPROVED BY: J. VARGHESE
DATE: DECEMBER 2023

CDM Smith
8310-1 N Capital of Texas Hwy, Suite 250
Austin, TX 78731
Tel: (512) 346-1100
TBPELS Firm Registration No. F-3043

CITY OF GEORGETOWN, TEXAS

CEDAR BREAKS AND D B WOOD LIFT STATIONS

DB WOOD LIFT STATION
SCHEMATIC II

PROJECT NO. 2048–272644
FILE NAME: E017LSRD.DWG
SHEET NO.
E-17

XREFs: [CDMS_2234_South lake to South fork_Border, J. VARGHESE– review stamp, CDMS_2234_ LS_Border] Images: []
Last saved by: VARGHESSJ2 Time: 12/11/2023 11:54:43 AM
pw:\\cdmsmith–a202–pw.bentley.com:pw_pi1\2048\272644\04 Design Services NM_50%\09 Electrical\10 BIM_CADD\E017LSRD.dwg
© 2023 CDM SMITH ALL RIGHTS RESERVED.
REUSE OF DOCUMENTS: THESE DOCUMENTS AND DESIGNS PROVIDED BY PROFESSIONAL SERVICE, INCORPORATED HEREIN, ARE THE PROPERTY OF CDM SMITH AND ARE NOT TO BE USED, IN WHOLE OR PART, FOR ANY OTHER PROJECT WITHOUT THE WRITTEN AUTHORIZATION OF CDM SMITH.

Plotted: 12/13/2023 3:04:40 PM

KEY NOTES

1. MOTOR PROTECTION RELAY PROVIDED BY PUMP MANUFACTURER.
2. CONTACT FROM MOTOR PROTECTION RELAY. COORDINATE RELAY LOGIC WITH SUBMITTED PUMP RELAY. REVISE SCHEMATIC AS REQUIRED.
3. CONTACT FROM RELAY PANEL LRP-200.

SCHEMATIC LEGEND

- ▪ EXTERNAL DEVICE TERMINAL CONNECTIONS
- ◪ DEVICE LOCATED IN FIELD
- ON (R) PUSH-TO-TEST LED PILOT LIGHT
- PTT

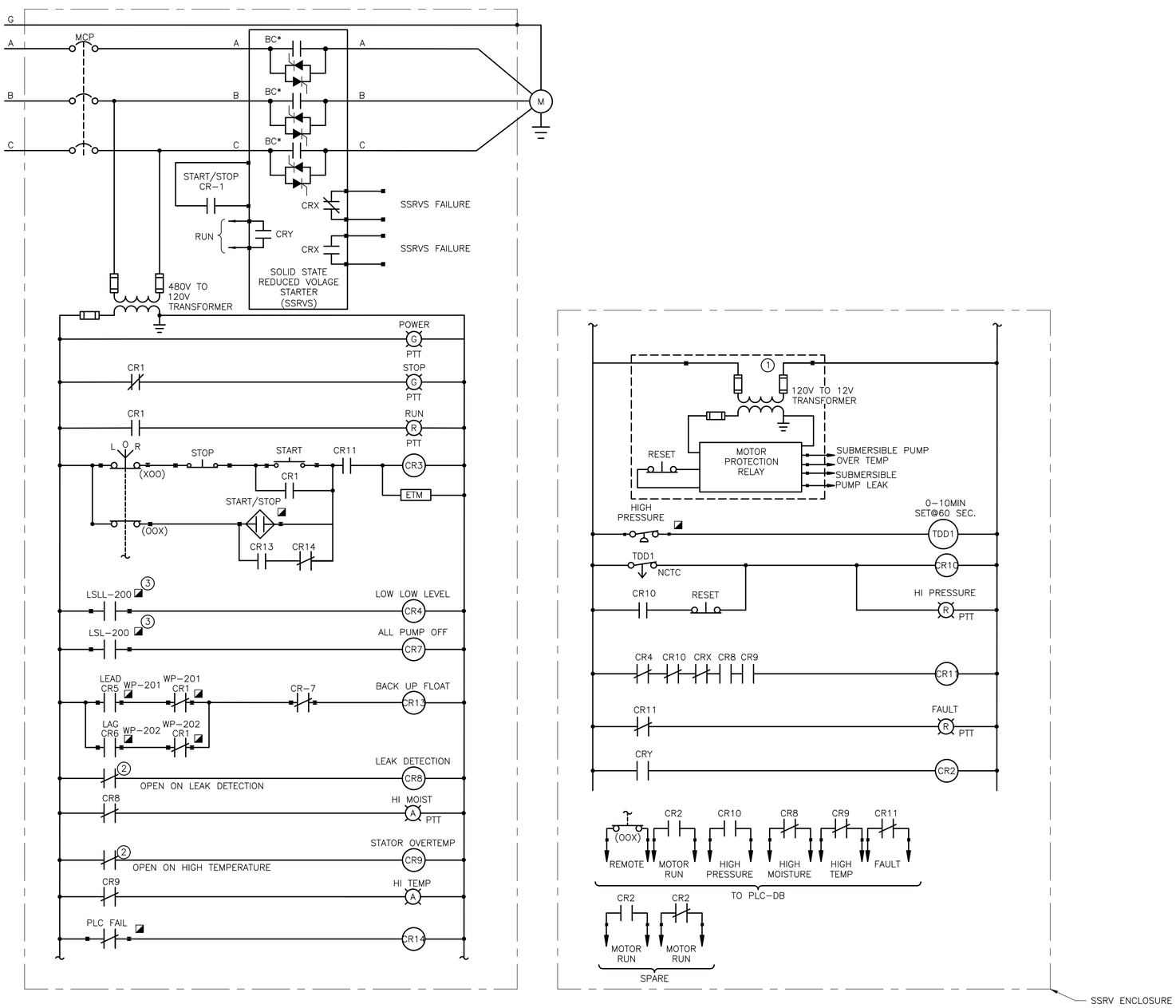

SSRVS-203
SUBMERSIBLE SEWAGE PUMP WP-203

SCHEMATIC 1/-

WP-203	MSH-203	TSH-203	PSH-203

REV. NO.	DATE	DRWN	CHKD	REMARKS

DESIGNED BY: VISHNU M
DRAWN BY: VISHNU M
SHEET CHK'D BY: J. VARGHESE
CROSS CHK'D BY: S. MEHTA
APPROVED BY: J. VARGHESE
DATE: DECEMBER 2023

CDM Smith
8310-1 N Capital of Texas Hwy, Suite 250
Austin, TX 78731
Tel: (512) 346-1100
TBPELS Firm Registration No. F-3043

CITY OF GEORGETOWN, TEXAS

CEDAR BREAKS AND D B WOOD LIFT STATIONS

DB WOOD LIFT STATION
SCHEMATIC III

PROJECT NO. 2048-272644
FILE NAME: E018LSRD.DWG
SHEET NO.
E-18

STATE OF TEXAS
JOYSON VARGHESE
134792
LICENSED PROFESSIONAL ENGINEER
12/9/23

XREFs: [CDMS_2234_South lake to South fork_Border, J. VARGHESE- review stamp, CDMS_2234_ LS_Border] Images: []
Last saved by: VARGHESEJ2 Time: 12/11/2023 11:54:28 AM
pw:\\cdmsmith-azo2-pw.bentley.com:pw_pt\2048\272644\04 Design Services NM_50%\09 Electrical\10 BIM_CADD\E018LSRD.dwg

© 2023 CDM SMITH ALL RIGHTS RESERVED.
REUSE OF DOCUMENTS: THESE DOCUMENTS AND DESIGNS PROVIDED BY PROFESSIONAL SERVICE, INCORPORATED HEREIN, ARE THE PROPERTY OF CDM SMITH. ARE NOT TO BE USED, IN WHOLE OR PART, FOR ANY OTHER PROJECT WITHOUT THE WRITTEN AUTHORIZATION OF CDM SMITH.

Plotted: 12/13/2023 3:04:42 PM

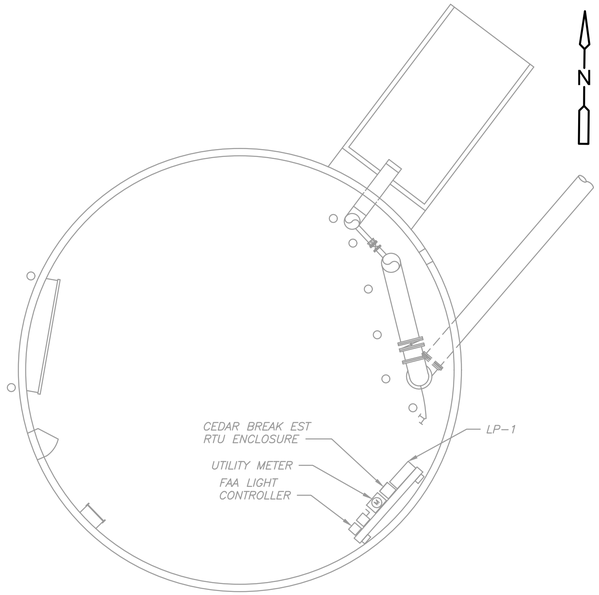

EXISTING ELEVATED STORAGE TANK

PLAN

1/8" = 1'- 0"

4 2 0 4 8

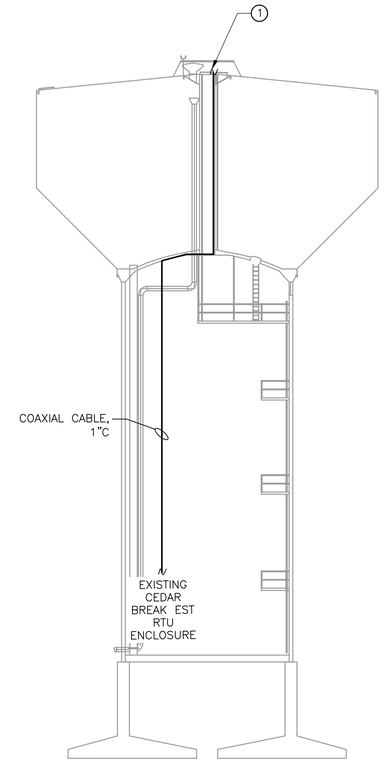

EXISTING ELEVATED STORAGE TANK ②

ELEVATION A

NTS

GENERAL NOTES:

1. THIS DRAWING REPRESENTS THE LATEST DOCUMENTED INFORMATION AVAILABLE ON THE EXISTING SYSTEM. HOWEVER, UNDOCUMENTED CHANGES MAY EXIST. PROVIDE THE NECESSARY CHANGES TO PROVIDE A COMPLETE AND OPERABLE SYSTEM ACCORDING TO THE INTENT OF THIS AND ALL DRAWINGS.

KEY NOTES:

① EXTEND CONDUIT AND CABLE TO THE OMNI ANTENNA. A GENERAL CONDUIT ROUTING IS SHOWN ON THE DRAWING, CONTRACTOR SHALL PROVDIE ALL LABOR, MATERIAL, AND INCIDENTAL TO FIELD VERIFY AND ROUTE CONDUIT AND CABLE FROM THE EXISTING RTU PANEL TO NEW OMNI ANTENNA.

② REFER TO INSTRUMENTATION DETAIL 'C' ON SHEET IZ-1 FOR OMNI ANTENNA MOUNTING DETAIL.

STATE OF TEXAS
JOYSON VARGHESE
134792
LICENSED
PROFESSIONAL ENGINEER
12/9/23

REV. NO.	DATE	DRWN	CHKD	REMARKS

DESIGNED BY: K. DINEESH
DRAWN BY: K. DINEESH
SHEET CHK'D BY: J. VARGHESE
CROSS CHK'D BY: S. MEHTA
APPROVED BY: J. VARGHESE
DATE: DECEMBER 2023

CDM Smith
8310-1 N Capital of Texas Hwy, Suite 250
Austin, TX 78731
Tel: (512) 346-1100
TBPELS Firm Registration No. F-3043

CITY OF GEORGETOWN, TEXAS

CEDAR BREAKS AND D B WOOD LIFT STATIONS

CEDAR BREAK EST
EXISTING ELEVATED STORAGE TANK
PLAN AND ELEVATION

PROJECT NO. 2048-272644
FILE NAME: E019NFPL.DWG

SHEET NO.
E-19

Plotted: 12/13/2023 3:04:44 PM

XREFs: [CDMS_2234_South Iole to South fork_Border, J. VARGHESE- review stamp, X-CTOWER, CDMS_2234_ LS_Border] images: []
Last saved by: VARGHESEJ2 Time: 12/11/2023 11:54:04 AM
pw:\\cdmsmith-azc2-pw.bentley.com:pw_pi1\2048\272644\04 Design Services NM_50%\09 Electrical\10 BIM_CADD\E019NFPL.dwg
©2023 CDM SMITH ALL RIGHTS RESERVED.
REUSE OF DOCUMENTS: THESE DOCUMENTS AND DESIGNS PROVIDED BY PROFESSIONAL SERVICE, INCORPORATED HEREIN, ARE THE PROPERTY OF CDM SMITH AND ARE NOT TO BE USED, IN WHOLE OR PART, FOR ANY OTHER PROJECT WITHOUT THE WRITTEN AUTHORIZATION OF CDM SMITH.

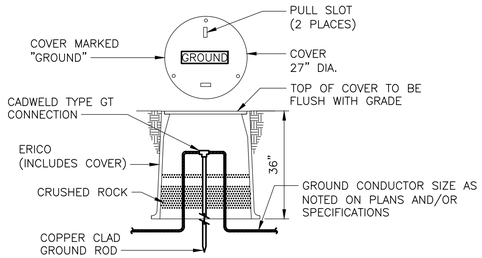

NOTE:

1. TO IMPROVE SYSTEM RESISTANCE, ERICO GEM MAY BE USED AS A BACKFILL MATERIAL IN AN AUGERED HOLE

GROUND ROD TEST WELL

DETAIL A
NTS

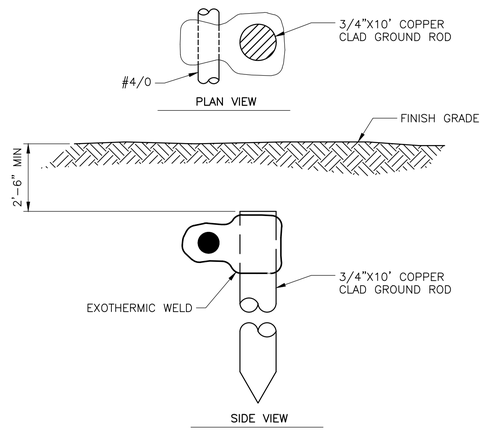

GROUND GRID CONNECTION TO GROUND ROD

DETAIL B
NTS

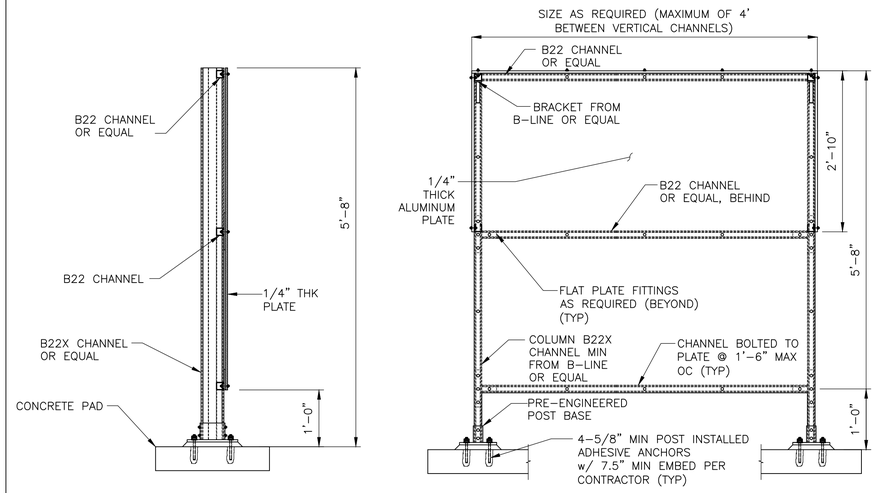

NOTES:

1. REFER TO SPECIFICATIONS FOR MATERIAL TYPES.
2. SUBMIT STRUCTURAL CALCULATIONS FOR EQUIPMENT SUPPORT STRUCTURE DESIGNED BY CONTRACTOR.
3. SUNSHIELD REQUIRED FOR OUTDOOR INSTALLATIONS ONLY.

EQUIPMENT SUPPORT STRUCTURE

DETAIL C
NTS

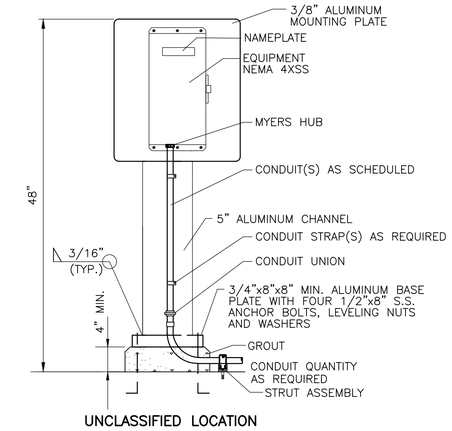

NOTES:

1. PROVIDE DISCONNECT WITH AUXILIARY CONTACT.
2. PUSHBUTTONS AS REQUIRED.
3. CONTRACTOR TO DESIGN MOUNTING STAND. MINIMUM DIMENSIONS ARE SHOWN.
4. SUBMITTALS SHALL BE IN ACCORDANCE WITH SPECIFICATIONS.

MOUNTING STAND

DETAIL D
NTS

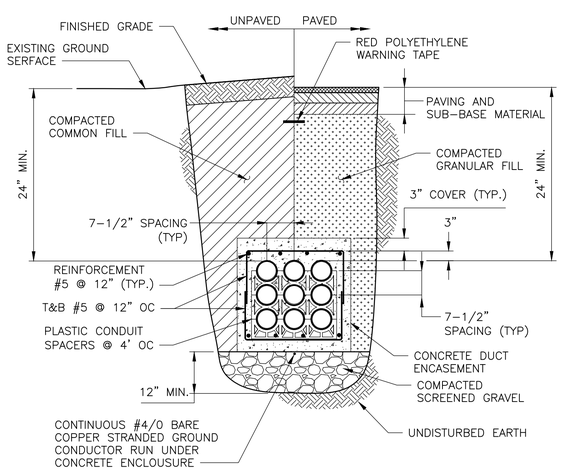

UNDERGROUND POWER DUCT BANK

DETAIL E
NTS

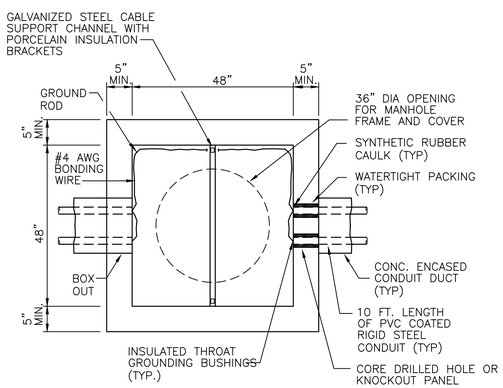

PLAN

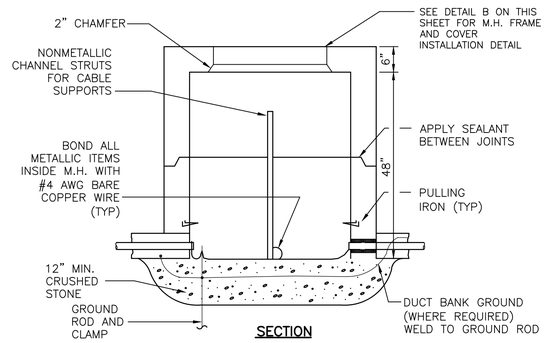

SECTION

NOTES:

1. BOND ALL METALLIC ITEMS INSIDE EHH TO GROUND W/MIN. #4 AWG BARE COPPER CABLE UNO.
2. HANDHOLES SHALL BE REINFORCED FOR H20 WHEEL LOAD.
3. CABLES SHALL BE RACKED ON PORCELAIN INSULATION CLAMPS.

ELECTRICAL HANDHOLE (EHH)

DETAIL F
NTS

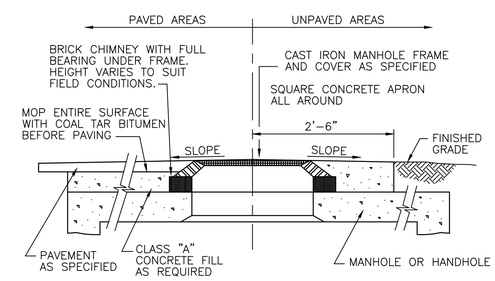

NOTE:

1. FINAL GRADING SHALL PROVIDE ADEQUATE DRAINAGE AWAY FROM MANHOLE COVER IN ALL DIRECTIONS.

MANHOLE OR HANDHOLE FRAME AND COVER

DETAIL G
NTS

STATE OF TEXAS
JOYSON VARGHESE
134792
LICENSED
PROFESSIONAL ENGINEER
12/9/23

REV. NO.	DATE	DRWN	CHKD	REMARKS

DESIGNED BY: K. DINEESH
DRAWN BY: K. DINEESH
SHEET CHK'D BY: J. VARGHESE
CROSS CHK'D BY: S. MEHTA
APPROVED BY: J. VARGHESE
DATE: DECEMBER 2023

CDM Smith
8310-1 N Capital of Texas Hwy, Suite 250
Austin, TX 78731
Tel: (512) 346-1100
TBPELS Firm Registration No. F-3043

CITY OF GEORGETOWN, TEXAS

CEDAR BREAKS AND D B WOOD LIFT STATIONS

ELECTRICAL DETAILS I

PROJECT NO. 2048-272644
FILE NAME: EZ01LSDT.DWG
SHEET NO.
EZ-1

XREFs: [CDMS_2234_South lake to South fork_Border, J. VARGHESE- review stamp, CDMS_2234_ LS_Border] Images: []
Last saved by: VARGHESEJ2 Time: 12/11/2023 11:53:55 AM
pw:\\cdmsmith-a202-pw.bentley.com:pw_pi\2048\272644\04 Design Services NM_50%\09 Electrical\10 BIM_CADD\EZ01LSDT.dwg
© 2023 CDM SMITH ALL RIGHTS RESERVED.
REUSE OF DOCUMENTS: THESE DOCUMENTS AND DESIGNS PROVIDED BY PROFESSIONAL SERVICE, INCORPORATED HEREIN, ARE THE PROPERTY OF CDM SMITH AND ARE NOT TO BE USED, IN WHOLE OR PART, FOR ANY OTHER PROJECT WITHOUT THE WRITTEN AUTHORIZATION OF CDM SMITH.
Plotted: 12/13/2023 3:04:47 PM

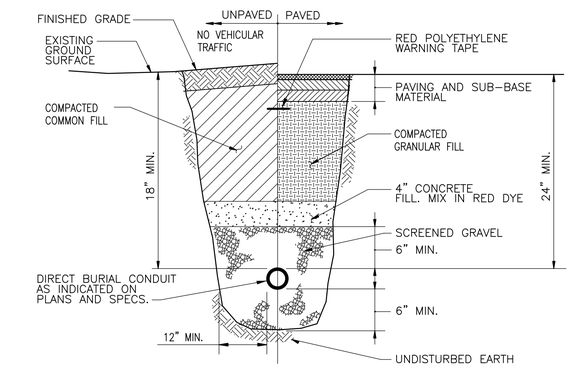

TYPICAL DIRECT BURIAL CONDUIT INSTALLATION

DETAIL H
NTS –

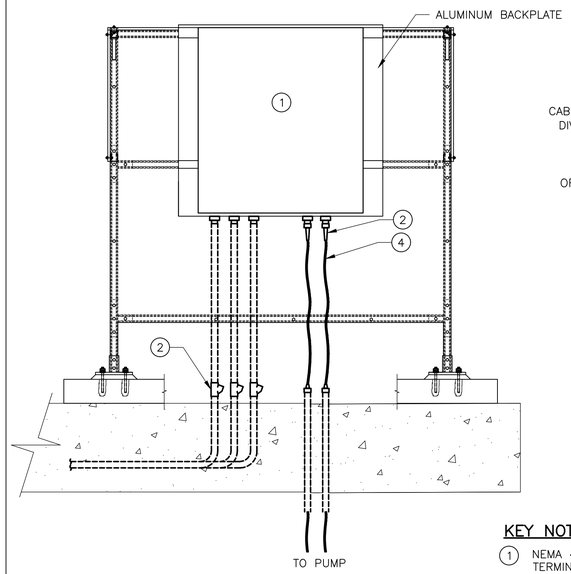

SUBMERSIBLE CABLE APPLICATION

SECTION I
NTS –

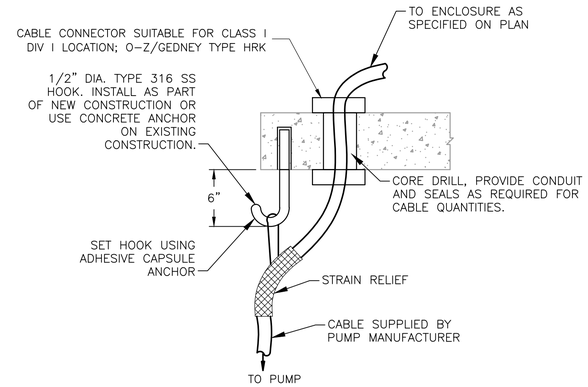

KEY NOTES:

1. NEMA 4X STAINLESS STEEL TERMINAL BOX. SIZE TERMINAL BOX PER NEC AS REQUIRED. PROVIDE TERMINAL BLOCKS WITH SCREW DOWN BOX LUGS FOR CONNECTION TO PUMP CABLE.
2. INSTALL CORD SEALING STRAIN-RELIEF CABLE CONNECTOR.
3. NO FITTING SHALL BE INSTALLED FROM CONDUIT SEAL TO TERMINAL BOX. NO FITTINGS SHALL BE INSTALLED FROM THE CONDUIT SEAL TO THE SLAB.
4. CABLE SUPPLIED BY PUMP MANUFACTURER.

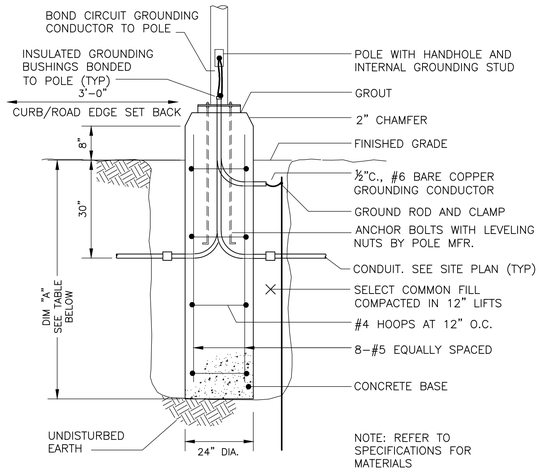

POLE HEIGHT	DIMENSION "A"
20'-0"	4'-6"

STANDARD LIGHTING BASE

DETAIL J
NTS –

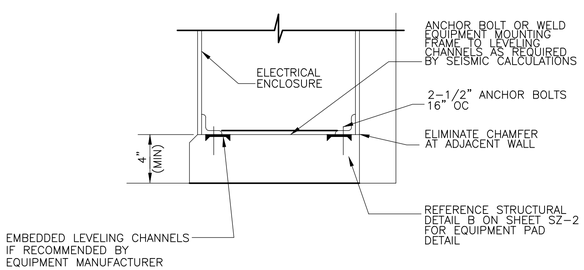

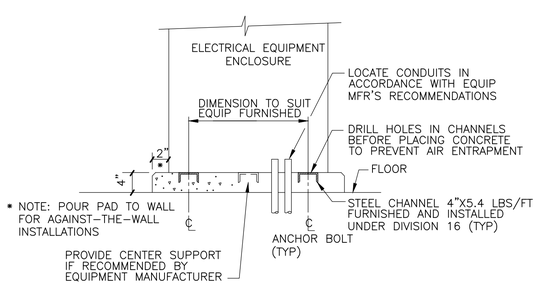

ELECTRICAL EQUIPMENT PAD

DETAIL K
NTS –

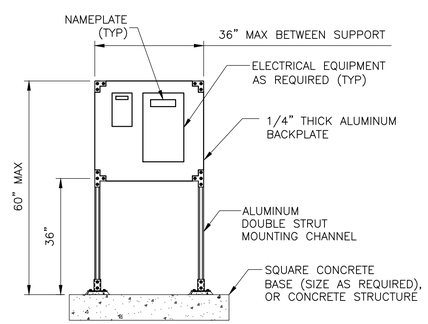

NOTES:

1. WELDING STRUT ASSEMBLY IS NOT ACCEPTABLE.

TYPICAL PAD MOUNTED STRUT SUPPORT STAND

DETAIL L
NTS –

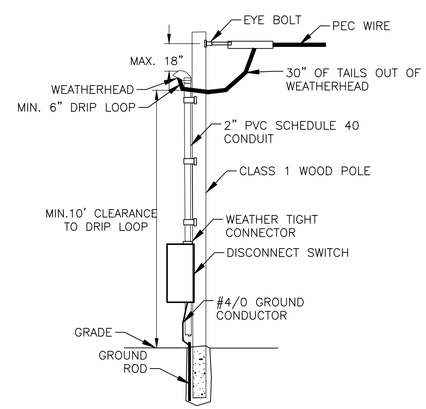

NOTES:

1. POLE SHALL MEET ALL REQUIREMENT OF PEC'S MEMBER OWNED POLE AND NESC CLEARANCES.
2. COORDINATE ALL RISER POLE INSTALLATION WITH PEC. INSTALLATION SHALL COMPLY WITH NEC AND NESC SPECIFICATION.

RISER POLE DETAIL

DETAIL M
NTS –

STATE OF TEXAS
JOYSON VARGHESE
134792
LICENSED
PROFESSIONAL ENGINEER
1/18/24

REV. NO.	DATE	DRWN	CHKD	REMARKS
1	1/18/24	JV	JV	ADDENDUM NO.3

DESIGNED BY: K. DINEESH
DRAWN BY: K. DINEESH
SHEET CHK'D BY: J. VARGHESE
CROSS CHK'D BY: S. MEHTA
APPROVED BY: J. VARGHESE
DATE: JANUARY 2024

CDM Smith
8310-1 N Capital of Texas Hwy, Suite 250
Austin, TX 78731
Tel: (512) 346-1100
TBPELS Firm Registration No. F-3043

CITY OF GEORGETOWN, TEXAS

CEDAR BREAKS AND D B WOOD LIFT STATIONS

ELECTRICAL DETAILS II

PROJECT NO. 2048-272644
FILE NAME: EZ02LSDT.DWG
SHEET NO.
EZ-2

XREFs: [CDMS_2234_South lake to South fork_Border, J. VARGHESE- review stamp, CDMS_2234_ LS_Border, DetailBorder] Images: []
Last saved by: VARGHESSJ2 Time: 1/18/2024 1:35:28 PM
pw:\\cdmsmith-az02-pw.bentley.com:pw_pi\2048\272644\04 Design Services NM_50%\09 Electrical\10 BIM_CADD\EZ02LSDT.dwg
©2023 CDM SMITH ALL RIGHTS RESERVED.
REUSE OF DOCUMENTS: THESE DOCUMENTS AND DESIGNS PROVIDED BY PROFESSIONAL SERVICE, INCORPORATED HEREIN, ARE THE PROPERTY OF CDM SMITH AND ARE NOT TO BE USED, IN WHOLE OR PART, FOR ANY OTHER PROJECT WITHOUT THE WRITTEN AUTHORIZATION OF CDM SMITH.

Plotted: 1/18/2024 2:14:06 PM

GENERAL INSTRUMENT OR FUNCTION SYMBOLS

SHARED DISPLAY/ SHARED CONTROL				
PRIMARY CHOICE	SECONDARY CHOICE	COMPUTER SOFTWARE	DISCRETE	LOCATION AND ACCESSIBILITY
				FIELD MOUNTED AND NORMALLY OPERATOR ACCESSIBLE
				PRIMARY CONTROL PANEL MOUNTED AND NORMALLY OPERATOR ACCESSIBLE
				PRIMARY CONTROL PANEL MOUNTED AND NOT NORMALLY OPERATOR ACCESSIBLE
				SECONDARY CONTROL PANEL MOUNTED AND NORMALLY OPERATOR ACCESSIBLE
				SECONDARY CONTROL PANEL MOUNTED AND NOT NORMALLY OPERATOR ACCESSIBLE

INSTRUMENTS SHARING COMMON HOUSING

PILOT LIGHT

DENOTES EQUIPMENT PROVIDED BY VENDOR

DENOTES EXISTING EQUIPMENT OR EQUIPMENT PROVIDED BY OTHERS UNDER A SEPARATE CONTRACT.

TYPICAL TAG NUMBERS & DESIGNATION

HS 1000 1A HOA AO

- INSTRUMENT TYPE SEE "INSTRUMENTATION FUNCTION CODE" TABLE
- ADDITIONAL INSTRUMENT IDENTIFICATION SEE "HAND SWITCH ABBREVIATIONS"
- INSTRUMENT IDENTIFICATION (FIRST TWO DIGITS DENOTE ASSOCIATED AREA)
- USED TO DENOTE THE DIVISION THE INSTRUMENT IS SUPPLIED UNDER OR IF THE INSTRUMENT IS EXISTING OR FUTURE.
- WHEN USED, LETTER DISTINGUISHES BETWEEN MULTIPLE, SIMILAR DEVICES.
- USED WHEN MULTIPLE TRAINS ARE USED AND REPRESENTS THE TRAIN NUMBER.

HAND SWITCH ABBREVIATIONS

AO = AUTO/OFF
AM = AUTO/MANUAL
CM = COMPUTER/MANUAL
CL = COMPUTER/LOCAL
E-STOP = EMERGENCY STOP
FR = FORWARD/REVERSE
FOR = FORWARD/OFF/REVERSE
FS = FAST SLOW
FOS = FAST/OFF/SLOW
HOA = HAND/OFF/AUTO
LLS = LEAD/LAG/STANDBY
LOC = LOCAL/OFF/COMPUTER
TSH = HIGH TEMPERATURE SWITCH
MSH = HIGH MOISTURE SWITCH
LOR = LOCAL/OFF/REMOTE
LOS = LOCKOUT/STOP
LA = LOCAL/AUTO
LR = LOCAL/REMOTE
OC = OPEN/CLOSE
OCA = OPEN/CLOSE/AUTO
OO = ON/OFF
OOA = ON/OFF/AUTO
OSC = OPEN/STOP/CLOSE
RDA = RECIRCULATE/DISCHARGE/AUTO
RSL = RAISE/STOP/LOWER
SS = START/STOP
SOR = START/OFF/RESET
LSHH = HIGH HIGH LEVEL SWITCH
LSH = HIGH LEVEL SWITCH
LS = LEVEL SWITCH
LSL = LOW LEVEL SWITCH
LSLL = LOW LOW LEVEL SWITCH

INSTRUMENTATION FUNCTION CODE

	FIRST LETTERS		SUCCEEDING LETTERS		
	COLUMN 1	COLUMN 2	COLUMN 3	COLUMN 4	COLUMN 5
	MEASURED/INITIATING VARIABLE	VARIABLE MODIFIER	READOUT/PASSIVE FUNCTION	OUTPUT/ACTIVE FUNCTION	FUNCTION MODIFIER
A	ANALYSIS		ALARM		
B	BURNER, COMBUSTION		USER'S CHOICE	USER'S CHOICE	USER'S CHOICE
C	USER'S CHOICE			CONTROL	CLOSED
D	USER'S CHOICE	DIFFERENCE, DIFFERENTIAL			DEVIATION
E	VOLTAGE		SENSOR, PRIMARY ELEMENT		
F	FLOW, FLOW RATE	RATIO			
G	USER'S CHOICE		GLASS, GAUGE, VIEWING DEVICE		
H	HAND				HIGH
I	CURRENT		INDICATE		
J	POWER		SCAN		
K	TIME, SCHEDULE	TIME RATE OF CHANGE		CONTROL STATION	
L	LEVEL		LIGHT		LOW
M	MOISTURE				MIDDLE, INTERMEDIATE
N	USER'S CHOICE		USER'S CHOICE	USER'S CHOICE	USER'S CHOICE
O	USER'S CHOICE		ORIFICE, RESTRICTION		OPEN
P	PRESSURE		POINT (TEST CONNECTION)		
Q	QUANTITY	INTEGRATE, TOTALIZE	INTEGRATE, TOTALIZE		
R	RADIATION		RECORD		RUN
S	SPEED, FREQUENCY	SAFETY		SWITCH	STOP
T	TEMPERATURE			TRANSMIT	
U	MULTIVARIABLE		MULTIFUNCTION	MULTIFUNCTION	
V	VIBRATION, MECHANICAL, ANALYSIS			VALVE, DAMPER, LOUVER	
W	WEIGHT, FORCE		WELL, PROBE		
X	UNCLASSIFIED (1)	X-AXIS	ACCESSORY DEVICES, UNCLASSIFIED (1)	UNCLASSIFIED (1)	UNCLASSIFIED (1)
Y	EVENT, STATE, PRESENCE	Y-AXIS		AUXILIARY DEVICES	
Z	POSITION, DIMENSION	Z-AXIS, SAFETY INSTRUMENT SYSTEM		DRIVER, ACTUATOR, UNCLASSIFIED, FINAL CONTROL ELEMENT	

TABLE NOTES:
(1) WHEN USED SYMBOL OR SIGNAL LINE IS ANNOTATED.

MISCELLANEOUS SYMBOLS

- M — MOTOR, VARIABLE SPEED
- M — MOTOR, CONSTANT SPEED
- MCC — INDICATES INTERLOCK OR LOGIC IN A MOTOR CONTROL CENTER
- I — INDICATES GENERAL OR MISCELLANEOUS HARDWIRED INTERLOCK
- MS — MOTOR STARTER
- SCR — SILICONE CONTROL RECTIFIER
- VFD — VARIABLE FREQUENCY DRIVE
- P — PURGE OR FLUSHING DEVICE
- ISR — INTRINSICALLY SAFE RELAY
- ISB — INTRINSICALLY SAFE BARRIER
- I/I — SIGNAL SPLITTER

INSTRUMENT LINE SYMBOLS

- ELECTRICAL SIGNAL
- COMMUNICATION LINK – COPPER (CAT 6)
- COMMUNICATION LINK – SERIAL
- VENDOR SUPPLIED CABLE
- COMMUNICATION LINK – FIBER OPTICS
- COMMUNICATION LINK – CELLULAR
- COMMUNICATION LINK – COAXIAL

ELECTRICAL / AIR SOURCES

- UPS — UPS POWERED ELECTRICAL SOURCE
- ES — ELECTRICAL SOURCE
- IA — INSTRUMENT AIR SOURCE

I/O SIGNALS

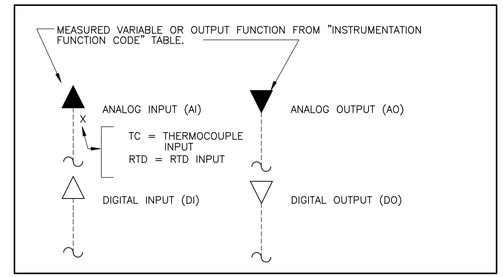

PRIMARY ELEMENTS

- FE — MAGNETIC FLOW METER
- FE — TURBINE OR PROPELLER FLOW METER
- FE — AVERAGING PITOT TUBE
- FE — ULTRASONIC FLOW METER
- FI — ROTAMETER
- FE — WEIR
- FE — ORIFICE PLATE
- FE — VENTURI TUBE
- FE — FLUME
- FE — GENERAL INSERTION FLOW METER (X; IM=INSERT MAG)
- FE — THERMAL MASS FLOW METER
- LE — FLOAT SWITCH
- LE — ULTRASONIC LEVEL SENSOR
- LE — RADAR LEVEL SENSOR
- LE — CAPACITANCE LEVEL SENSOR
- LE — PRESSURE SENSING LEVEL METER
- PI — PRESSURE GAUGE
- PDI — DIFFERENTIAL PRESSURE GAUGE
- TI — TEMPERATURE GAUGE
- AE — GENERAL ANALYZER (X; EXTENDED POWER SOURCE; pH=pH, DO=DISSOLVED OXYGEN, H2S=HYDROGEN SULFIDE, LEL=% LOWER EXPLOSIVE LIMIT, O2=OXYGEN, O3=OZONE, NH3=NITRATE, TURB=TURBIDITY, FL=FLUORIDE)

GENERAL NOTES

1. THIS LEGEND APPLIES TO P&IDS ONLY AND MAY DIFFER FROM LEGENDS FOR OTHER SHEETS.

2. IN GENERAL THIS LEGEND SHEET AND THE P&IDS ARE BASED ON THE INTERNATIONAL SOCIETY OF AUTOMATION (ISA) STANDARDS AND RECOMMENDED PRACTICES FOR INSTRUMENTATION AND CONTROL. SOME MODIFICATIONS, ADDITIONS AND ALTERATIONS HAVE BEEN MADE AS REQUIRED TO ACCOMMODATE PROJECT REQUIREMENTS.

3. SOME PROCESS ITEMS SUCH AS EQUIPMENT ISOLATION VALVES, BYPASS LINES, ETC., WHICH ARE NOT CRITICAL FOR AN UNDERSTANDING OF THE INSTRUMENTATION FUNCTIONS ARE NOT SHOWN ON THE P&IDS.

4. SEE ELECTRICAL AND MECHANICAL SHEETS AND SPECIFICATIONS FOR ADDITIONAL CONTROL AND INTERLOCK REQUIREMENTS.

5. LIGHTER WEIGHT LINES, SHOWN AS ———— , INDICATE EQUIPMENT, INSTRUMENTS OR PIPING THAT ARE EXISTING. WEIGHTED LINES, SHOWN AS OR HEAVIER ━━━━ , INDICATE EQUIPMENT, INSTRUMENTS OR PIPING THAT ARE NEW. DASHED WEIGHTED LINES, SHOWN AS —·—·—·— , INDICATED EQUIPMENT, INSTRUMENTS OR PIPING THAT ARE GROUPED AS A PACKAGE.

GENERAL ABBREVIATIONS

AI	ANALOG IN
AO	ANALOG OUT
CPU	CENTRAL PROCESSOR UNIT
DI	DIGITAL OR DISCRETE INPUT
DO	DIGITAL OUTPUT
FC	FAIL CLOSED
FO	FAIL OPEN OR FIBER OPTIC
HMI	HUMAN MACHINE INTERFACE
LCP	LOCAL CONTROL PANEL
LCS	LOCAL CONTROL STATION
MCC	MOTOR CONTROL CENTER
MCP	MASTER CONTROL PANEL
NC	NORMALLY CLOSED
NO	NORMALLY OPEN
OIT	OPERATOR INTERFACE TERMINAL
PLC	PROGRAMMABLE LOGIC CONTROLLER
RIO	REMOTE INPUT/OUTPUT
SCADA	SUPERVISORY, CONTROL AND DATA ACQUISITION
UPS	UNINTERRUPTIBLE POWER SUPPLY
VFD	VARIABLE FREQUENCY DRIVE
SSRVS	SOLID STATE REDUCED VOLTAGE STARTER

PROCESS FLOW STREAM ABBREVIATION

REFERENCE SHEET M-1 (MECHANICAL LEGEND) FOR A FULL LIST PROCESS FLOW ABBREVIATION.

A. Paithankar
STATE OF TEXAS
ANJALI PAITHANKAR
121554
LICENSED
PROFESSIONAL ENGINEER
12/09/2023

REV. NO.	DATE	DRWN	CHKD	REMARKS

DESIGNED BY: K.KHALDI
DRAWN BY: K.KHALDI
SHEET CHK'D BY: A.PAITHANKAR
CROSS CHK'D BY: Y.ZHONG
APPROVED BY: A.PAITHANKAR
DATE: DECEMBER 2023

CDM Smith
8310-1 N Capital of Texas Hwy, Suite 250
Austin, TX 78731
Tel: (512) 346-1100
TBPELS Firm Registration No. F-3043

CITY OF GEORGETOWN, TEXAS

CEDAR BREAKS AND D B WOOD LIFT STATIONS

INSTRUMENTATION LEGEND I
NOTES AND ABBREVIATIONS

PROJECT NO. 2048-272644
FILE NAME: I-1
SHEET NO. I-1

XREFs: [CDMS_2234, J.Haire- review stamp] Images: []
Last saved by: KHALDIK Time: 9/22/2022 3:46:30 PM
pw:\\cdmsmith-a02-pw.bentley.com:PW_EXT\124899\270868\04 Design Services LS NM_90%\10 Instrumentation\10 CADD\I-1.dwg
©2023 CDM SMITH ALL RIGHTS RESERVED.
REUSE OF DOCUMENTS: THESE DOCUMENTS AND DESIGNS PROVIDED BY PROFESSIONAL SERVICE, INCORPORATED HEREIN, ARE THE PROPERTY OF CDM SMITH AND ARE NOT TO BE USED, IN WHOLE OR PART, FOR ANY OTHER PROJECT WITHOUT THE WRITTEN AUTHORIZATION OF CDM SMITH.

Plotted: 12/13/2023 9:33:08 AM

TYPICAL PIPE TAG NUMBERS & DESIGNATION

6"–RW–DI–L12W01

- FLOW DIRECTION
- LINE NUMBER (FIRST TWO DIGITS DENOTE ASSOCIATED AREA. IF 'W' IS PRESENT, PIPE REMAINS WITHIN ASSOCIATED AREA. IF NOT PRESENT, THEN PIPE RUNS FROM AREA DENOTED BY FIRST TWO DIGITS TO AREA DENOTED BY SECOND TWO DIGITS)
- SPEC
- SERVICE
- SIZE

PIPE LINE SYMBOLS

- PIPE UNION
- FLEXIBLE BELLOWS TYPE COUPLING
- FLEXIBLE COUPLING (GENERAL SYMBOL)
- QUICK CONNECT TYPE COUPLING
- HOSE CONNECTION
- Y–STRAINER
- REDUCER/ENLARGER
- BLIND FLANGE
- PLAIN END x PLAIN END PIPE COUPLING RESTRAINED
- CONTINUED PIPE
- CONCENTRIC FLANGE MOUNTED DIAPHRAGM SEAL
- THREADED DIAPHRAGM SEAL
- OPEN EQUIPMENT DRAIN
- DIFFUSER
- BASKET STRAINER
- FILTER
- PULSATION DAMPNER
- MAJOR PROCESS LINE
- MINOR PROCESS LINE
- DOUBLE WALLED PIPE
- E (S) — ELECTRIC (OR STEAM) TRACING
- PROCESS FLUID / DWG NO. / TO/FROM LOCATION — DRAWING CONTINUATION

GATE SYMBOLS

- SLUICE GATE (SLG)
- SLIDE GATE (SG)
- WEIR SLIDE GATE (WSG)
- BUTTERFLY GATE
- BULK HEAD GATE/STOP LOG

VALVE ACTUATORS

- HAND (MANUALLY) OPERATED
- DIAPHRAGM, SPRING OPPOSED
- DIAPHRAGM, PRESSURE–BALANCED
- M — ROTARY MOTOR. (SHOWN TYPICALLY WITH ELECTRIC SIGNAL. MAY BE HYDRAULIC OR PNEUMATIC)
- S — SOLENOID
- E/H — ELECTROHYDRAULIC
- CYLINDER, SINGLE–ACTING, SPRING OPPOSED WITHOUT POSITIONER OR PILOT.
- CYLINDER, DOUBLE ACTING, WITHOUT POSITIONER OR PILOT
- EXAMPLE OF CYLINDER WITH POSITIONER
- ANY CYLINDER THAT IS ASSEMBLED WITH A PILOT SO THAT ASSEMBLY IS ACTUATED BY ONE CONTROLLED INPUT. PILOT MAY BE POSITIONER, SOLENOID VALVE, SIGNAL CONVERTER, etc.
- FLOAT ACTUATOR

VALVE SYMBOLS

- GATE VALVE (GV)
- PLUG VALVE (PV)
- BUTTERFLY VALVE (BFV)
- BALL VALVE (BV)
- GLOBE VALVE (GLV)
- PINCH VALVE (PCHV)
- DIAPHRAGM VALVE (DV)
- WEIGHTED FOOT VALVE
- SWING CHECK VALVE (CV)
- BALL CHECK VALVE (BCV)
- THREE WAY BALL VALVE (BV)
- S — SOLENOID VALVE (SV)
- NEEDLE VALVE (NV)
- KNIFE VALVE (KNV)
- MUD VALVE (MV)
- PRESSURE REGULATING VALVE (PREGV)
- BACK PRESSURE REGULATING VALVE (BPV)
- DIFFERENTIAL PRESSURE REGULATING VALVE W/ EXTERIOR TAPS
- SELF–CONTAINED DIFFERENTIAL PRESSURE REGULATING VALVE
- S — SELF–CONTAINED DIFFERENTIAL PRESSURE REGULATING VALVE (SOLENOID OPERATED)
- PRESSURE RELIEF VALVE (PRV)
- VACUUM RELIEF VALVE (VRV)
- COMBINATION AIR VALVE (CAV)
- AIR RELEASE VALVE (ARV)
- BACKFLOW PREVENTER

TYPICAL EQUIPMENT TAG NUMBERS & DESIGNATION

P–1000–1A

- WHEN USED, LETTER DISTINGUISHES BETWEEN MULTIPLE, SIMILAR DEVICES.
- USED WHEN MULTIPLE TRAINS ARE USED AND REPRESENTS THE TRAIN NUMBER.
- EQUIPMENT IDENTIFICATION (FIRST TWO DIGITS DENOTE ASSOCIATED AREA)
- EQUIPMENT TYPE

PROCESS EQUIPMENT

- SUBMERSIBLE PUMP

A. Paithankar

STATE OF TEXAS
ANJALI PAITHANKAR
121554
LICENSED
PROFESSIONAL ENGINEER

12/09/2023

REV. NO.	DATE	DRWN	CHKD	REMARKS

DESIGNED BY: K.KHALDI
DRAWN BY: K. KHALDI
SHEET CHK'D BY: A.PAITHANKAR
CROSS CHK'D BY: Y.ZHONG
APPROVED BY: A.PAITHANKAR
DATE: DECEMBER 2023

CDM Smith
8310-1 N Capital of Texas Hwy, Suite 250
Austin, TX 78731
Tel: (512) 346-1100
TBPELS Firm Registration No. F-3043

CITY OF GEORGETOWN, TEXAS

CEDAR BREAKS AND D B WOOD LIFT STATIONS

INSTRUMENTATION LEGEND II
NOTES AND ABBREVIATIONS

PROJECT NO. 2048–272644
FILE NAME: I–2
SHEET NO.
I-2

XREFs: [CDMS_2234, J.Haire- review stamp] Images: []
Last saved by: KHALDIK Time: 9/2/2022 3:50:20 PM
pw:\\cdmsmith-az02-pw.bentley.com:PW_EXT\124899\270868\04 Design Services LS NM_903X\10 Instrumentation\10 CADD\I-2.dwg
© 2023 CDM SMITH ALL RIGHTS RESERVED.
REUSE OF DOCUMENTS: THESE DOCUMENTS AND DESIGNS PROVIDED BY PROFESSIONAL SERVICE, INCORPORATED HEREIN, ARE THE PROPERTY OF CDM SMITH AND ARE NOT TO BE USED, IN WHOLE OR PART, FOR ANY OTHER PROJECT WITHOUT THE WRITTEN AUTHORIZATION OF CDM SMITH.

Plotted: 12/13/2023 9:33:58 AM

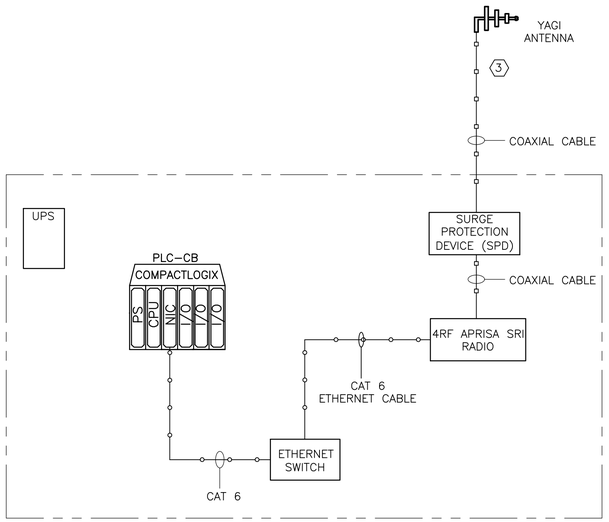

CEDAR BREAKS LIFT STATION RTU ENCLOSURE

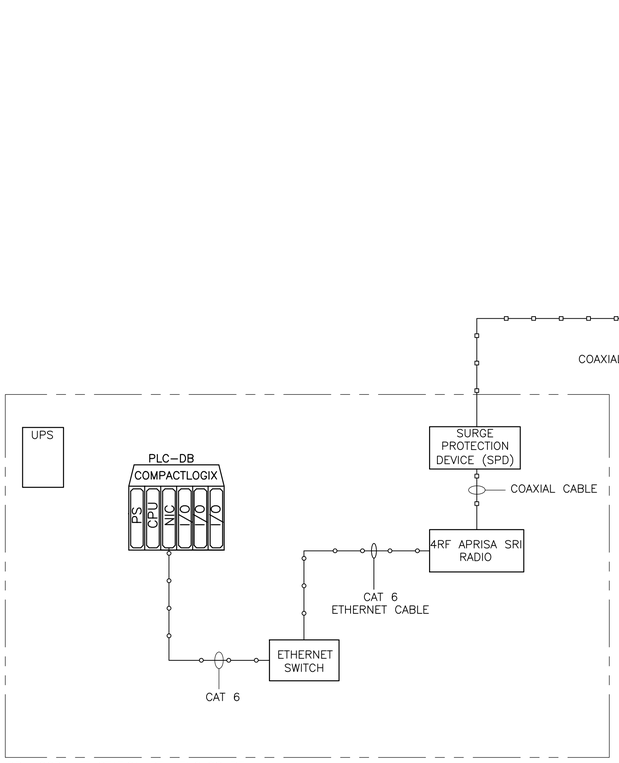

DB WOOD LIFT STATION RTU ENCLOSURE

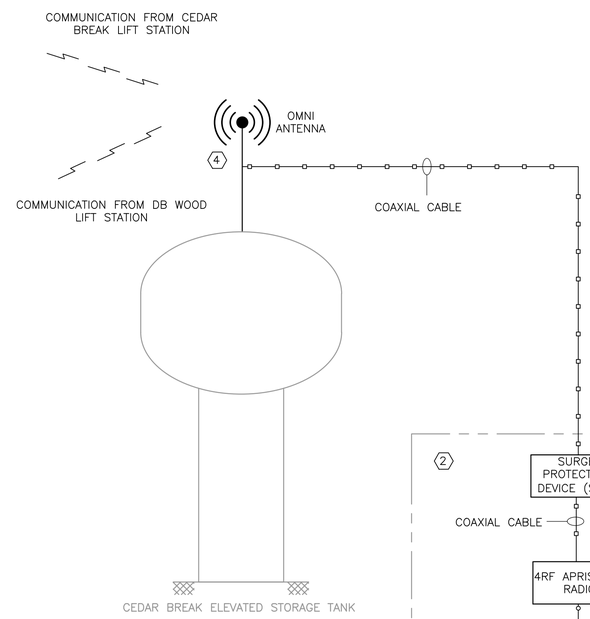

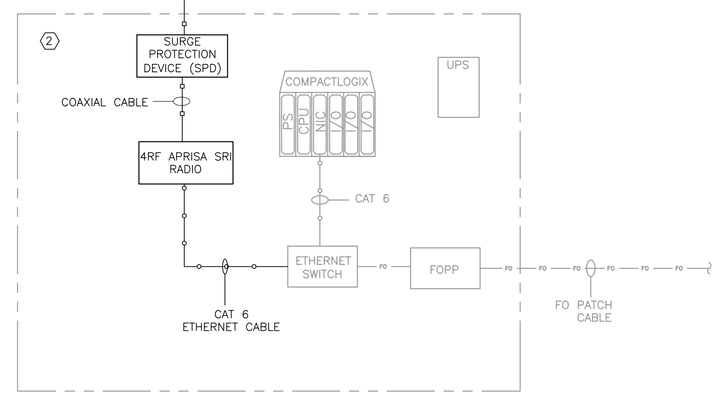

EXISTING CEDAR BREAK EST RTU ENCLOSURE

KEY NOTES:

1. INTEGRATE AND PROVIDE PLC AND HMI PROGRAMMING MODIFICATION TO THE EXISTING CITY CENTRAL PLANT SCADA SYSTEM WITH ASSISTANCE OF THE CITY TO ACCOMMODATE AND ADD SIGNALS FROM THE CEDAR BREAK AND DB WOOD PUMP STATIONS. CONFIRM SIGNALS FROM BOTH PUMP STATIONS ARE RECEIVED AT CITY CENTRAL AND CAN BE MONITORED AT SCADA. REFER TO SPECIFICATION 406100.

2. MODIFY THE EXISTING CEDAR BREAK EST RTU ENCLOSURE TO ADD APRISA SRI RADIO AND A SURGE PROTECTION DEVICE FOR THE RADIO. COORDINATE WORK WITH THE CITY STAFF.

3. A POLE FOR RADIO ANTENNA MUST BE PROVIDED AT THE CEDAR BREAK LIFT STATION. A MINIMUM 10 FT POLE MUST BE PROVIDED FOR THE ANTENNA AND IT MUST BE INSTALLED SUCH THAT THERE IS A CLEAR LINE OF SIGHT TO CEDAR BREAK ELEVATED STORAGE TANK RADIO ANTENNA. FINAL HEIGHT OF ANTENNA TO BE DETERMINED IN ACCORDANCE WITH A RADIO PATH STUDY RECOMMENDATION DURING CONSTRUCTION. REFER TO INSTALLATION DETAIL J ON DRAWING IZ–3.

4. A POLE FOR RADIO ANTENNA MUST BE PROVIDED AT THE CEDAR BREAK ELEVATED STORAGE TANK. A MINIMUM 10 FT POLE MUST BE PROVIDED FOR THE ANTENNA AND IT MUST BE INSTALLED SUCH THAT THERE IS A CLEAR LINE OF SIGHT TO CEDAR BREAK AND DB WOOD LIFT STATIONS RADIO ANTENNAS. FINAL HEIGHT OF ANTENNA TO BE DETERMINED IN ACCORDANCE WITH A RADIO PATH STUDY RECOMMENDATION DURING CONSTRUCTION. REFER TO INSTALLATION DETAIL C ON DRAWING IZ–1.

EXISTING CEDAR BREAK RTU ENCLOSURE (PHOTOGRAPH FOR REFERENCE)

A. Paithankar

STATE OF TEXAS
ANJALI PAITHANKAR
121554
LICENSED
PROFESSIONAL ENGINEER

12/09/2023

REV. NO.	DATE	DRWN	CHKD	REMARKS

DESIGNED BY: K.KHALDI
DRAWN BY: K. KHALDI
SHEET CHK'D BY: A.PAITHANKAR
CROSS CHK'D BY: Y.ZHONG
APPROVED BY: A.PAITHANKAR
DATE: DECEMBER 2023

CDM Smith
8310-1 N Capital of Texas Hwy, Suite 250
Austin, TX 78731
Tel: (512) 346-1100
TBPELS Firm Registration No. F-3043

CITY OF GEORGETOWN, TEXAS

CEDAR BREAKS AND D B WOOD LIFT STATIONS

SCADA SYSTEM ARCHITECTURE

PROJECT NO. 2048–272644
FILE NAME: I–3

SHEET NO.
I-3

xREFs: [CDMS_2234, J.Hoire- review stamp] Images: []
Last saved by: KHALDK Time: 9/8/2022 2:04:56 PM
pw:\\cdmsmith-az02-pw.bentley.com:PW_EXT\124999\270868\04 Design Services LS NM_90%\10 Instrumentation\10 CADD\I-3.dwg
© 2023 CDM SMITH ALL RIGHTS RESERVED.
REUSE OF DOCUMENTS: THESE DOCUMENTS AND DESIGNS PROVIDED BY PROFESSIONAL SERVICE, INCORPORATED HEREIN, ARE THE PROPERTY OF CDM SMITH AND ARE NOT TO BE USED, IN WHOLE OR PART, FOR ANY OTHER PROJECT WITHOUT THE WRITTEN AUTHORIZATION OF CDM SMITH.

Plotted: 12/13/2023 9:34:23 AM

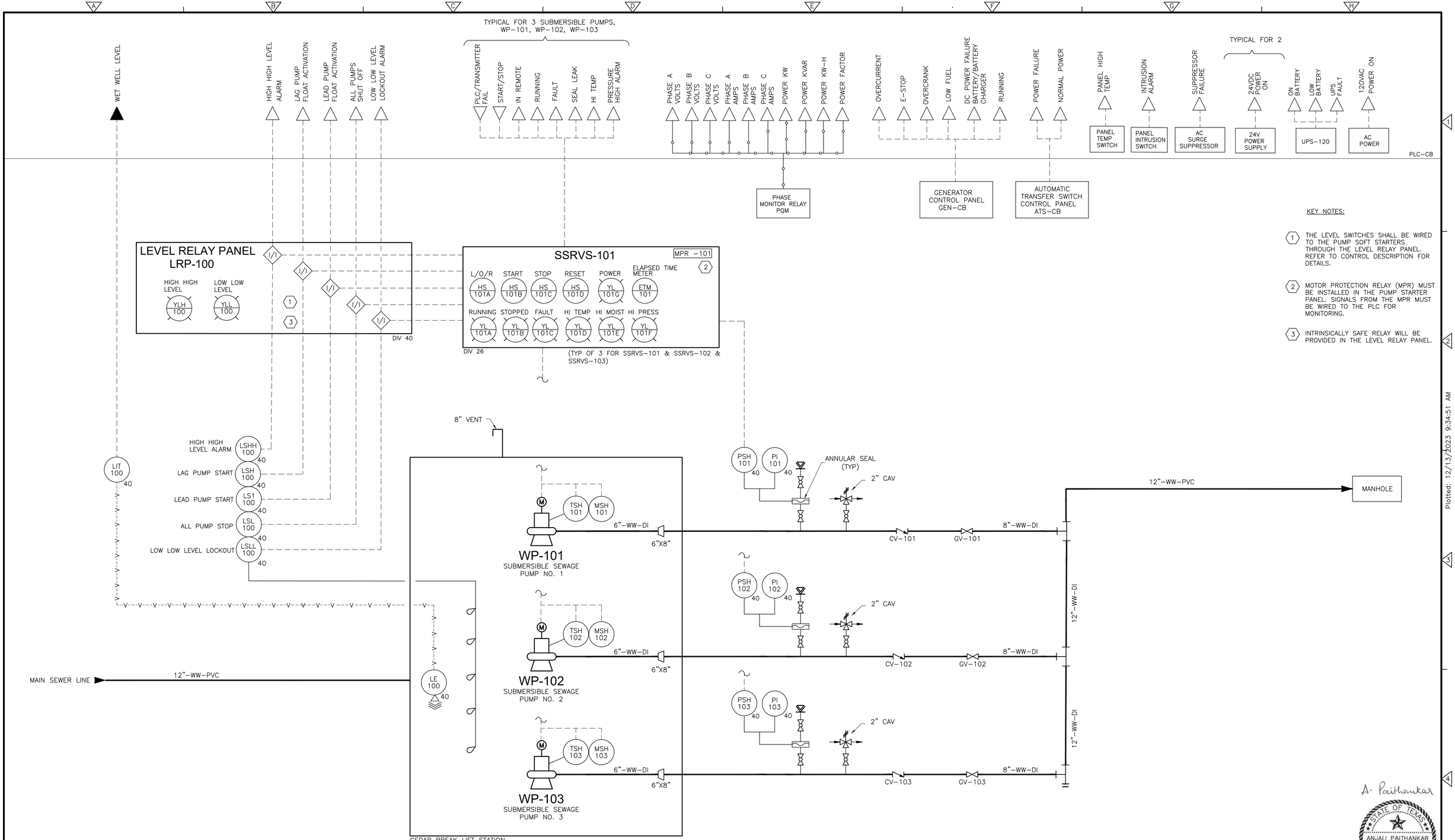

KEY NOTES:

1. THE LEVEL SWITCHES SHALL BE WIRED TO THE PUMP SOFT STARTERS THROUGH THE LEVEL RELAY PANEL. REFER TO CONTROL DESCRIPTION FOR DETAILS.
2. MOTOR PROTECTION RELAY (MPR) MUST BE INSTALLED IN THE PUMP STARTER PANEL. SIGNALS FROM THE MPR MUST BE WIRED TO THE PLC FOR MONITORING.
3. INTRINSICALLY SAFE RELAY WILL BE PROVIDED IN THE LEVEL RELAY PANEL.

A. Paithankar

STATE OF TEXAS
ANJALI PAITHANKAR
121554
LICENSED PROFESSIONAL ENGINEER

12/09/2023

REV. NO.	DATE	DRWN	CHKD	REMARKS

DESIGNED BY: K.KHALDI
DRAWN BY: K. KHALDI
SHEET CHK'D BY: A.PAITHANKAR
CROSS CHK'D BY: Y.ZHONG
APPROVED BY: A.PAITHANKAR
DATE: DECEMBER 2023

CDM Smith
8310-1 N Capital of Texas Hwy, Suite 250
Austin, TX 78731
Tel: (512) 346-1100
TBPELS Firm Registration No. F-3043

CITY OF GEORGETOWN, TEXAS

CEDAR BREAKS AND D B WOOD LIFT STATIONS

CEDAR BREAKS LIFT STATION
PROCESS AND INSTRUMENTATION DIAGRAM

PROJECT NO. 2048-272644
FILE NAME: I-4
SHEET NO.
I-4

XREFs: [CDMS_2234 J.Hoire- review stamp] Images: []
Last saved by: KHALDIK Time 9/8/2022 12:04:12 PM
pw:\\cdmsmith-azc2-pw.bentley.com:PW_EXT\124899\270868\04 Design Services LS NM_90%\10 Instrumentation\10 CADD\I-4.dwg
©2023 CDM SMITH ALL RIGHTS RESERVED.
REUSE OF DOCUMENTS: THESE DOCUMENTS AND DESIGNS PROVIDED BY PROFESSIONAL SERVICE, INCORPORATED HEREIN, ARE THE PROPERTY OF CDM SMITH AND ARE NOT TO BE USED, IN WHOLE OR PART, FOR ANY OTHER PROJECT WITHOUT THE WRITTEN AUTHORIZATION OF CDM SMITH.

Plotted: 12/13/2023 9:34:51 AM

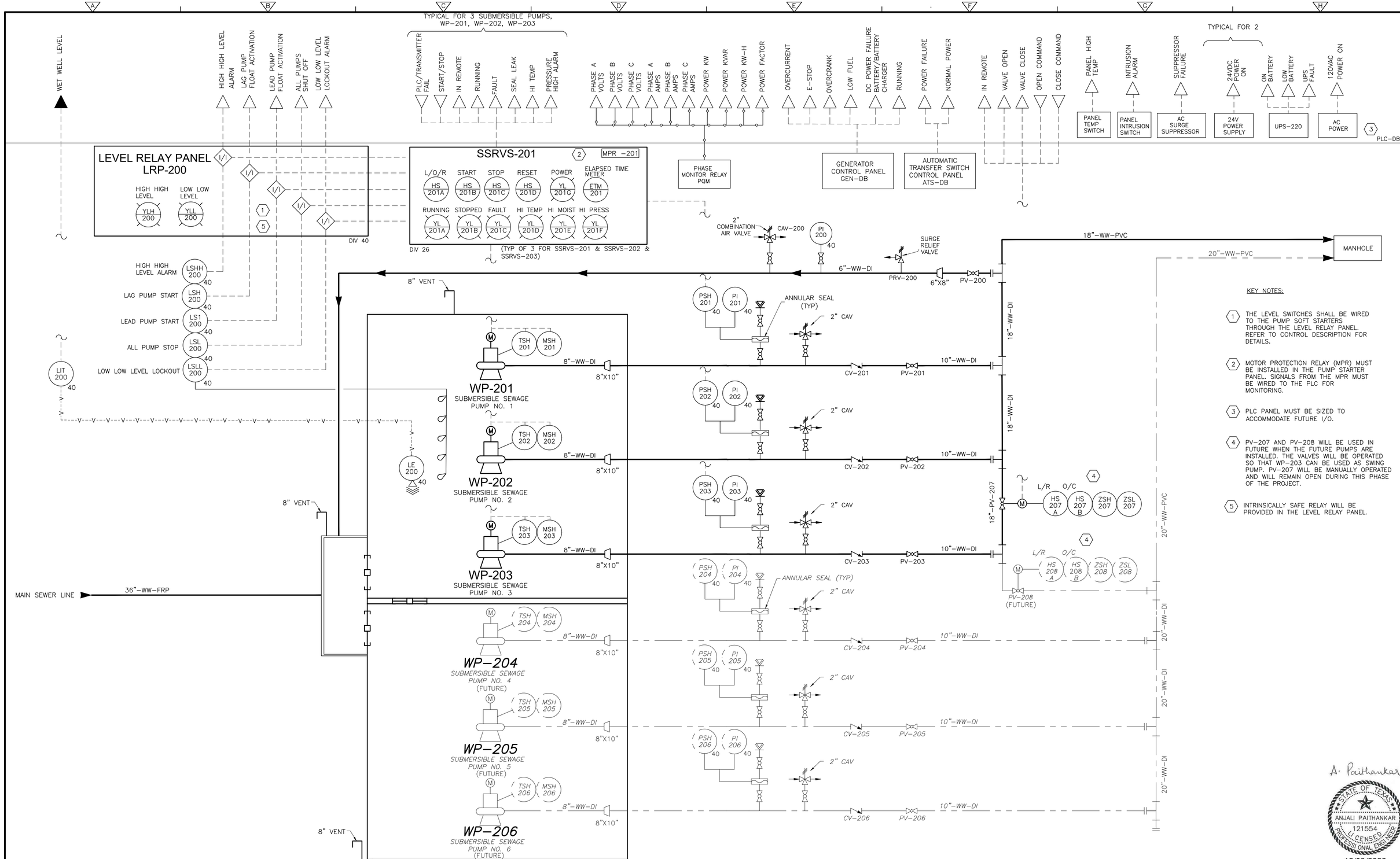

KEY NOTES:

1. THE LEVEL SWITCHES SHALL BE WIRED TO THE PUMP SOFT STARTERS THROUGH THE LEVEL RELAY PANEL. REFER TO CONTROL DESCRIPTION FOR DETAILS.
2. MOTOR PROTECTION RELAY (MPR) MUST BE INSTALLED IN THE PUMP STARTER PANEL. SIGNALS FROM THE MPR MUST BE WIRED TO THE PLC FOR MONITORING.
3. PLC PANEL MUST BE SIZED TO ACCOMMODATE FUTURE I/O.
4. PV-207 AND PV-208 WILL BE USED IN FUTURE WHEN THE FUTURE PUMPS ARE INSTALLED. THE VALVES WILL BE OPERATED SO THAT WP-203 CAN BE USED AS SWING PUMP. PV-207 WILL BE MANUALLY OPERATED AND WILL REMAIN OPEN DURING THIS PHASE OF THE PROJECT.
5. INTRINSICALLY SAFE RELAY WILL BE PROVIDED IN THE LEVEL RELAY PANEL.

A. Paithankar

STATE OF TEXAS
ANJALI PAITHANKAR
121554
LICENSED PROFESSIONAL ENGINEER

12/09/2023

REV. NO.	DATE	DRWN	CHKD	REMARKS

DESIGNED BY: K.KHALDI
DRAWN BY: K. KHALDI
SHEET CHK'D BY: A.PAITHANKAR
CROSS CHK'D BY: Y.ZHONG
APPROVED BY: A.PAITHANKAR
DATE: DECEMBER 2023

CDM Smith
8310-1 N Capital of Texas Hwy, Suite 250
Austin, TX 78731
Tel: (512) 346-1100
TBPELS Firm Registration No. F-3043

CITY OF GEORGETOWN, TEXAS

CEDAR BREAKS AND D B WOOD LIFT STATIONS

D B WOOD LIFT STATION
PROCESS AND INSTRUMENTATION DIAGRAM

PROJECT NO. 2048-272644
FILE NAME: I-5
SHEET NO.
I-5

XREFs: [CDMS_2234, J.Haire- review stamp] Images: []
Last saved by: KHALDIK Time: 9/8/2022 12:04:12 PM
pw:\\cdmsmith-gz02-pw.bentley.com:PW_EXT\124899\270866\04 Design Services LS NM_90%\10 Instrumentation\10 CADD\I-4.dwg
© 2023 CDM SMITH ALL RIGHTS RESERVED
REUSE OF DOCUMENTS: THESE DOCUMENTS AND DESIGNS PROVIDED BY PROFESSIONAL SERVICE, INCORPORATED HEREIN, ARE THE PROPERTY OF CDM SMITH AND ARE NOT TO BE USED, IN WHOLE OR PART, FOR ANY OTHER PROJECT WITHOUT THE WRITTEN AUTHORIZATION OF CDM SMITH.

Plotted: 12/13/2023 9:35:10 AM

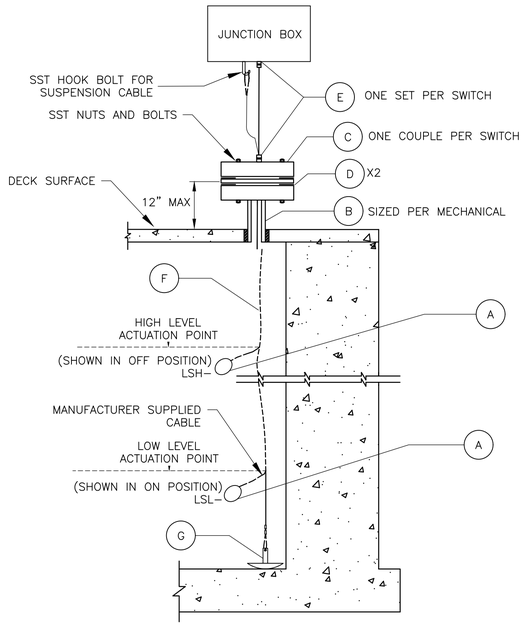

	ITEM	DESCRIPTION	MATERIAL
*	A	FLOAT SWITCH	SEE 407000
*	B	DECK FLANGE / PIPE FLANGE	304SS
*	C	BLIND FLANGE W/ WELDED HALF COUPLE	304SS
*	D	NEOPRENE GASKET	N/A
*	E	CORD GRIPS	304SS
*	F	3/8" SUSPENSION CABLE	316SS
*	G	ANCHOR	PVC COATED STEEL

* DENOTES NOTE TO CONTRACTOR

NOTES:

1. SECURE SUSPENSION CABLE ENDS WITH A MINIMUM TWO (2) CABLE CLAMPS.
2. SECURE FLOATS USING MOUNTING KITS FROM THE SAME MANUFACTURER AS THE FLOATS. MOUNTING HARDWARE SHALL BE SUITABLE FOR CONTINUAL SUBMERGENCE WITHOUT CORROSION.
3. SECURE FLOAT CABLES TO SUSPENSION CABLE WITH WIRE TIES.
4. SUITABLE MOUNT TERMINAL BOX WHERE LOCATED BY ELECTRICAL DRAWINGS. REFER TO DETAIL D, IZ-1 AND EQUIPMENT MOUNTING DETAILS (ELECTRICAL DRAWINGS) BASED ON SITE CONDITIONS.
5. ABOVE DECK HARDWARE TO BE 304SS, AND BELOW DECK HARDWARE TO BE 316SS
6. ANCHOR WITH SUFFICIENT WEIGHT TO COUNTER ACT THE BUOYANCY FROM ALL INSTALLED FLOATS ON THE SYSTEM PLUS THE SUCTION PULL OF THE PUMPS.

FLOAT SWITCH (CABLE SUSPENSION)

DETAIL A
NTS

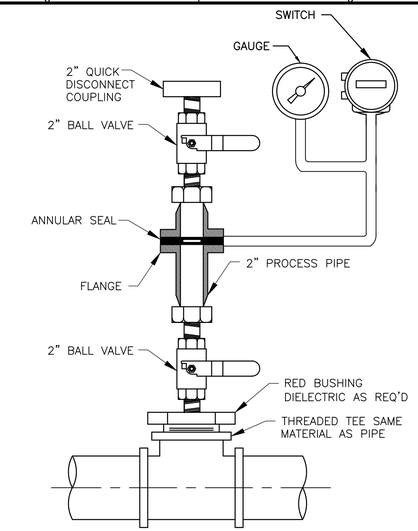

NOTES:

1. FOR PROPER OPERATION, EVACUATE SECTION BETWEEN ANNULAR SEAL AND PRESSURE DEVICE OF AIR AND SEAL WITH OIL.
2. DETAIL SHOWN IS TYPICAL FOR GAUGE/SWITCH INSTALLATION.

PRESSURE GAUGE/SWITCH (ANNULAR SEAL)

DETAIL B
NTS

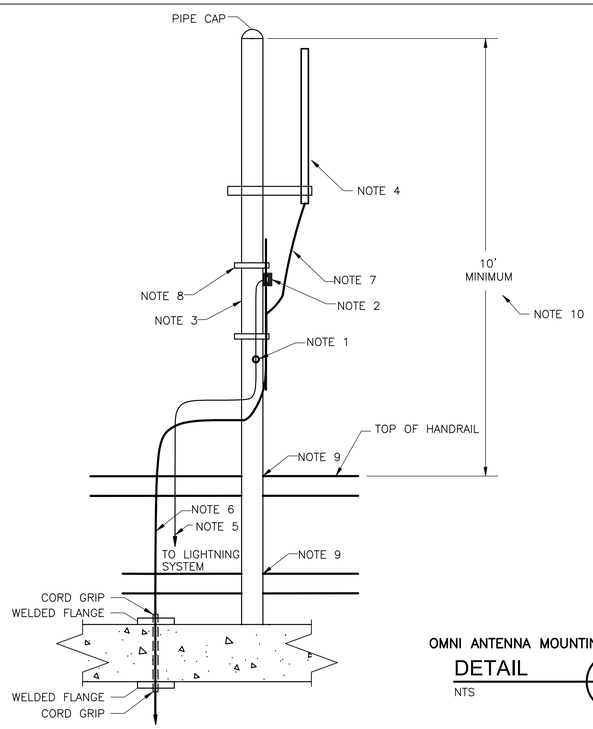

NOTES:

1. GROUND MAST WITH GROUNDING LUG AND CONNECT TO LIGHTNING PROTECTION SYSTEM PER DIVISION 26.
2. ANTENNA CABLE GROUNDING KIT. WIRE TO MAST GROUND.
3. ANTENNA MOUNTING MAST, 2" DIA. HOT DIP GALVANIZED.
4. OMNI ANTENNA.
5. #2/0 AWG COPPER GROUND WIRE.
6. ROUTE ANTENNA CABLE TO RADIO ENCLOSURE. CABLE HOUSING SHALL BE IMC OR RGS RIGID CONDUIT PIPE AT LEAST 1" IN DIAMETER
7. PROVIDE SUPERFLEX COAXIAL CABLE JUMPER FOR FINAL CONNECTION.
8. ANTENNA CABLE CLAMPS. HOT DIP GALVANIZED. CLAMP CABLE TO MAST AT 2' INTERVALS.
9. ANTENNA MAST SHALL BE SECURED TO THE STRUCTURE HANDRAILING TO WITHSTAND UP TO 130 MPH WINDS.
10. POLE FOR RADIO ANTENNA MUST BE PROVIDED. A MINIMUM 10 FT POLE MUST BE PROVIDED. FINAL HEIGHT OF ANTENNA TO BE DETERMINED IN ACCORDANCE WITH A RADIO PATH STUDY RECOMMENDATION DURING CONSTRUCTION

OMNI ANTENNA MOUNTING DETAIL

DETAIL C
NTS

NOTES:

1. SEE NOTES TO CONTRACTOR.
2. A MINIMUM OF 0.4" OF THE SENSOR RADAR SHIELD SHALL PROTRUDE FROM THE LIP OF INSERTION TO AVOID FALSE ECHOES BEING REFLECTED OFF THE FLANGE.
3. KEEP CONDUCTIVE OBJECTS (e.g. LADDERS, PIPES, ETC.) AWAY FROM PROBE TO AVOID ECHOING INTERFERENCE WITH SENSOR.
4. TO AVOID INTERFERENCE, THE SENSOR SHALL BE PLACED 1 FOOT AWAY FROM THE WALL FOR EVERY 10 FEET OF VESSEL HEIGHT. (e.g. 40 FT. WELL = 4 FT. AWAY FROM WELL WALL)

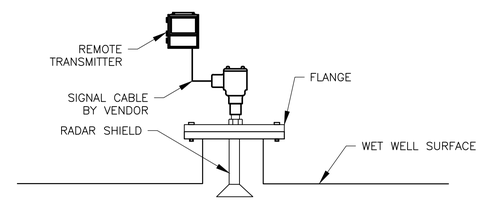

RADAR LEVEL TRANSMITTER (IN WET WELL)

DETAIL D
NTS

A. Paithankar
STATE OF TEXAS
ANJALI PAITHANKAR
121554
LICENSED
PROFESSIONAL ENGINEER
12/09/2023

REV. NO.	DATE	DRWN	CHKD	REMARKS

DESIGNED BY: K.KHALDI
DRAWN BY: K.KHALDI
SHEET CHK'D BY: A.PAITHANKAR
CROSS CHK'D BY: Y.ZHONG
APPROVED BY: A.PAITHANKAR
DATE: DECEMBER 2023

CDM Smith
8310-1 N Capital of Texas Hwy, Suite 250
Austin, TX 78731
Tel: (512) 346-1100
TBPELS Firm Registration No. F-3043

CITY OF GEORGETOWN, TEXAS

CEDAR BREAKS AND D B WOOD LIFT STATIONS

INSTRUMENTATION INSTALLATION DETAILS I

PROJECT NO. 2048-272644
FILE NAME: IZ-1
SHEET NO.
IZ-1

XREFs: [CDMS_2234, J.Haire- review stamp] Images: []
Last saved by: K4ALDK Time: 9/2/2022 3:55:14 PM
p:\\cdmsmith-a202-pw.bentley.com:PW_EXT\124899\270868\04 Design Services LS NM_903%\10 Instrumentation\10 CADD\IZ-1.dwg
©2023 CDM SMITH ALL RIGHTS RESERVED.
REUSE OF DOCUMENTS: THESE DOCUMENTS AND DESIGNS PROVIDED BY PROFESSIONAL SERVICE, INCORPORATED HEREIN, ARE THE PROPERTY OF CDM SMITH AND ARE NOT TO BE USED, IN WHOLE OR PART, FOR ANY OTHER PROJECT WITHOUT THE WRITTEN AUTHORIZATION OF CDM SMITH.
Plotted: 12/13/2023 9:35:36 AM

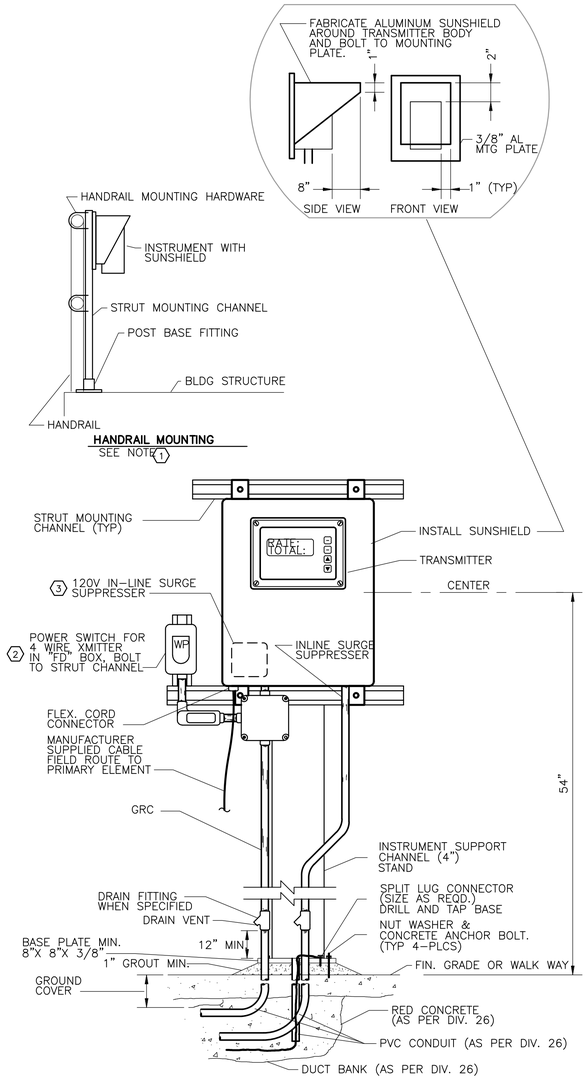

NOTES:

1. THIS DETAIL IS APPLICABLE FOR HANDRAIL MOUNTING. CONTRACTOR TO MODIFY INSTALLATION AS REQUIRED BY THE SITE CONDITIONS.
2. WHEN INSTRUMENT IS INSTALLED OUT OF SIGHT FROM THE CONTROLLING CIRCUIT BREAKER, PROVIDE POWER SWITCH FOR DISCONNECT.
3. WHEN INSTRUMENT IS INSTALLED OUTDOORS OR THE CABLE(S) LEAVE THE BUILDING ENVELOPE, PROVIDE A SILICON DIODE TYPE SURGE PROTECTION DEVICE (SPD) FOR EACH POWER, ANALOG AND COMMUNICATION CIRCUIT.
4. ORIENT INSTRUMENT FACE TOWARDS THE MAIN PATHWAY AND PROVIDE SUN SHIELD WHERE APPROPRIATE TO AVOID EXCESSIVE UV EXPOSURE AND ANY READABILITY ISSUES DUE TO GLARE.

TYPICAL INSTRUMENT INSTALLATION

DETAIL E
NTS

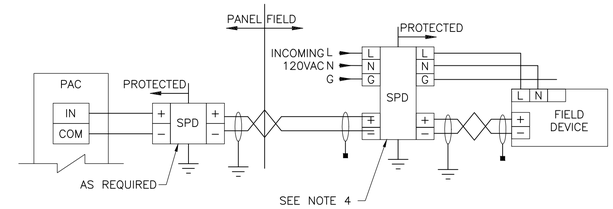

TYPICAL TRANSMITTER LOOP (EXTERNAL SOURCE: 4 WIRE)

DETAIL F
NTS

NOTES:

1. TERMINATE SPD DIRECTLY TO GROUND BUS. DO NOT DAISY CHAIN.
2. TERMINATE SHIELD/ DRAIN WIRE DIRECTLY TO SHIELD BUS/ GROUND. DO NOT DAISY CHAIN.
3. TAPE BACK SHIELD/ DRAIN WIRE WHERE INDICATED.
4. IN ADDITION TO THE CONTROL PANEL SPD, INSTALL SPD FOR EACH FIELD DEVICE THAT IS INSTALLED OUTSIDE OF THE BUILDING ENVELOPE. REFER TO SPECIFICATION 406717.

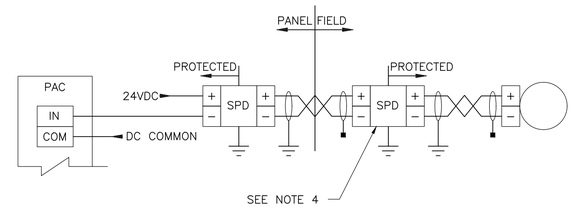

TYPICAL TRANSMITTER LOOP (LOOP POWERED: 2 WIRE)

DETAIL G
NTS

NOTES:

1. TERMINATE SPD DIRECTLY TO GROUND BUS. DO NOT DAISY CHAIN.
2. TERMINATE SHIELD/ DRAIN WIRE DIRECTLY TO SHIELD BUS/ GROUND. DO NOT DAISY CHAIN.
3. TAPE BACK SHIELD/ DRAIN WIRE WHERE INDICATED.
4. WHERE SPD ARE REQUIRED IN THE FIELD, INSTALL SURGE PROTECTION AS CLOSE TO FIELD DEVICE AS POSSIBLE. REFER TO SPECIFICATION 406717.

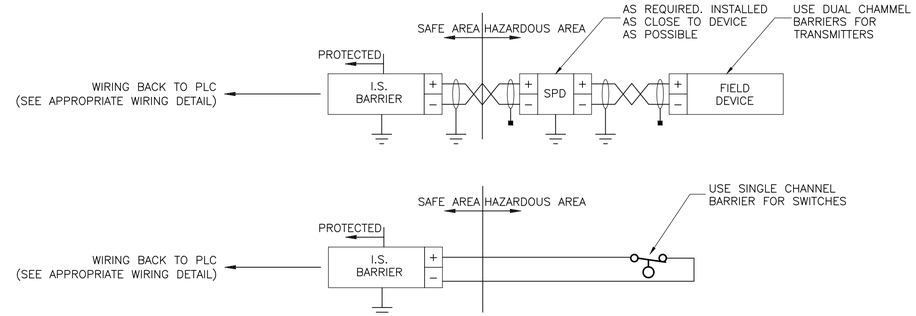

TYPICAL INTRINSICALLY SAFE CIRCUIT

DETAIL H
NTS

NOTES:

1. INSTALL INTRINSICALLY SAFE BARRIER IN METALLIC BOX OUTSIDE THE HAZARDOUS AREA ENVELOPE OR WHERE OTHERWISE IN ELECTRICAL DRAWINGS.
2. SEAL ALL CONDUIT ENTRIES FROM FIELD DEVICE TO THE SAFE AREA BOX. REFER TO ELECTRICAL SPECIFICATION FOR ADDITIONAL REQUIREMENTS.
3. ROUTE INTRINSICALLY SAFE WIRES FROM BARRIER TO DEVICE IN A DEDICATED COLOR CODED CONDUIT. COLOR SHALL BE "INTRINSIC BLUE". REFER TO ELECTRICAL SPECIFICATION FOR ADDITIONAL REQUIREMENTS.
4. CONTRACTOR TO ENSURE THAT THE INTRINSIC SAFE SYSTEM (i.e. SPD, WIRES AND DEVICE DO NOT EXCEED THE BARRIER LIMITATIONS.
5. FOR CLASS 1, DIVISION 1 APPLICATIONS, ONLY "IA" CLASSIFIED INTRINSIC BARRIERS ARE PERMITTED. FOR ALL OTHER AREAS, PROVIDE "IB" CLASSIFIED DEVICES AS A MINIMUM.

A. Paithankar
STATE OF TEXAS
ANJALI PAITHANKAR
121554
LICENSED
PROFESSIONAL ENGINEER
12/09/2023

REV. NO.	DATE	DRWN	CHKD	REMARKS

DESIGNED BY: K.KHALDI
DRAWN BY: K.KHALDI
SHEET CHK'D BY: A.PAITHANKAR
CROSS CHK'D BY: Y.ZHONG
APPROVED BY: A.PAITHANKAR
DATE: DECEMBER 2023

CDM Smith
8310-1 N Capital of Texas Hwy, Suite 250
Austin, TX 78731
Tel: (512) 346-1100
TBPELS Firm Registration No. F-3043

CITY OF GEORGETOWN, TEXAS

CEDAR BREAKS AND D B WOOD LIFT STATIONS

INSTRUMENTATION INSTALLATION DETAILS II

PROJECT NO. 2048-272644
FILE NAME: IZ-2
SHEET NO.
IZ-2

XREFs: [CDMS_2234, J.Hoire- review stamp] Images: []
Last saved by: KHALDIK, Time: 9/2/2023 3:55:14 PM.
pw:\\cdmsmith-azc02-pw.bentley.com:PW_EXT\124899\270868\04 Design Services LS NM_90%\10 Instrumentation\10 CADD\IZ-1.dwg
©2023 CDM SMITH ALL RIGHTS RESERVED.
REUSE OF DOCUMENTS: THESE DOCUMENTS AND DESIGNS PROVIDED BY PROFESSIONAL SERVICE, INCORPORATED HEREIN, ARE THE PROPERTY OF CDM SMITH.
THIS DOCUMENT IS THE PROPERTY OF CDM SMITH AND ARE NOT TO BE USED, IN WHOLE OR PART, FOR ANY OTHER PROJECT WITHOUT THE WRITTEN AUTHORIZATION OF CDM SMITH.

Plotted: 12/13/2023 9:35:56 AM

NOTES:

1. COORDINATE WITH OWNER AND OTHER TRADES FOR ANTENNA MOUNTING LOCATION AND SUITABILITY.
2. AT A MINIMUM, PROVIDE A 30 FT TOWER, PERFORM A FIELD RADIO PATH STUDY TO DETERMINE THE HEIGHT OF THE ANTENNA FOR CLEAR LINE OF SIGHT.
3. DETAIL SHOWS THE MAJOR COMPONENTS OF THIS RADIO/ANTENNA INSTALLATION. COORDINATE INSTALLATION DETAIL WITH RADIO/ANTENNA INSTALLERS AND MANUFACTURERS.
4. MAY REQUIRE ANTI-CLIMB PROTECTION OR PERIMETER FENCE.
5. MAY REQUIRE PAINTING AND/OR OBSTRUCTION LIGHTS, VERIFY FAA REQUIREMENTS.
6. PROVIDE A SAFETY CLIMBING FACILITY WITH SAFETY CLIMB DEVICE FOR TOWERS OVER 10 FEET HIGH PER TIA-222, REVISION G.

KEY NOTES:

1. LIGHTNING ROD PER NFPA 780
2. YAGI RADIO ANTENNA
3. ANTENNA MOUNTING BRACKETS
4. PROVIDE SUPERFLEX COAXIAL CABLE JUMPER FOR FINAL CONNECTION.
5. ANTENNA CABLE GROUNDING KIT
6. SECURE CABLE TO TOWER WITH CLAMPS, MAXIMUM 3 FEET BETWEEN CLAMPS.
7. DRIP LOOP
8. JUMPER #10 AWG COPPER MINIMUM PER NEC
9. GROUND WIRE: 6 AWG PER NEC ARTICLE 820 WITHOUT LIGHTENING ROD. OTHERWISE, 2 AWG STRANDED (OR 2/0 STRANDED FOR TOWERS OVER 75 FEET) PER NFPA 780 FOR LIGHTENING ROD.
10. IF LIGHTNING ROD IS USED, SUPPLY TOWER GROUND ROD PER NFPA 780 AND NEC. 8 FEET MINIMUM COPPER CLAD.
11. BOND TO ELECTRICAL GROUNDING ELECTRODE SYSYEM WITH #6 AWG MINIMUM PER NEC ARTICLE 820.
12. RADIO ANTENNA HEIGHT [SEE DESIGN NOTE 2]
13. ANTENNA CABLE
14. EXOTHERMIC WELD ON AT LEAST TWO LEGS PER NFPA 780.
15. FOUNDATION DESIGN AS RECOMMENDED BY TOWER MANUFACTURER FOR LOCAL SOIL AND WIND SITE CONDITIONS, AND TIA-222, REVISION G.
16. GRAVEL FOR DRAINAGE
17. PROVIDE A MINIMUM OF 10 FEET BETWEEN OTHER ANTENNAS ON THE SAME TOWER.
18. ANTENNA CABLE MUST BE LISTED FOR INDOOR USE IF LONGER THAN 50 FEET
19. COPPER GROUND BAR
20. SURGE PROTECTOR
21. ANTENNA CABLE FEED THROUGH PANEL
22. ROUTE ANTENNA CABLE TO RADIO/LOCATION IN THE CONTROL PANEL. RF CABLE MUST BE LISTED FOR INDOOR USE IF OVER 50 FEET.

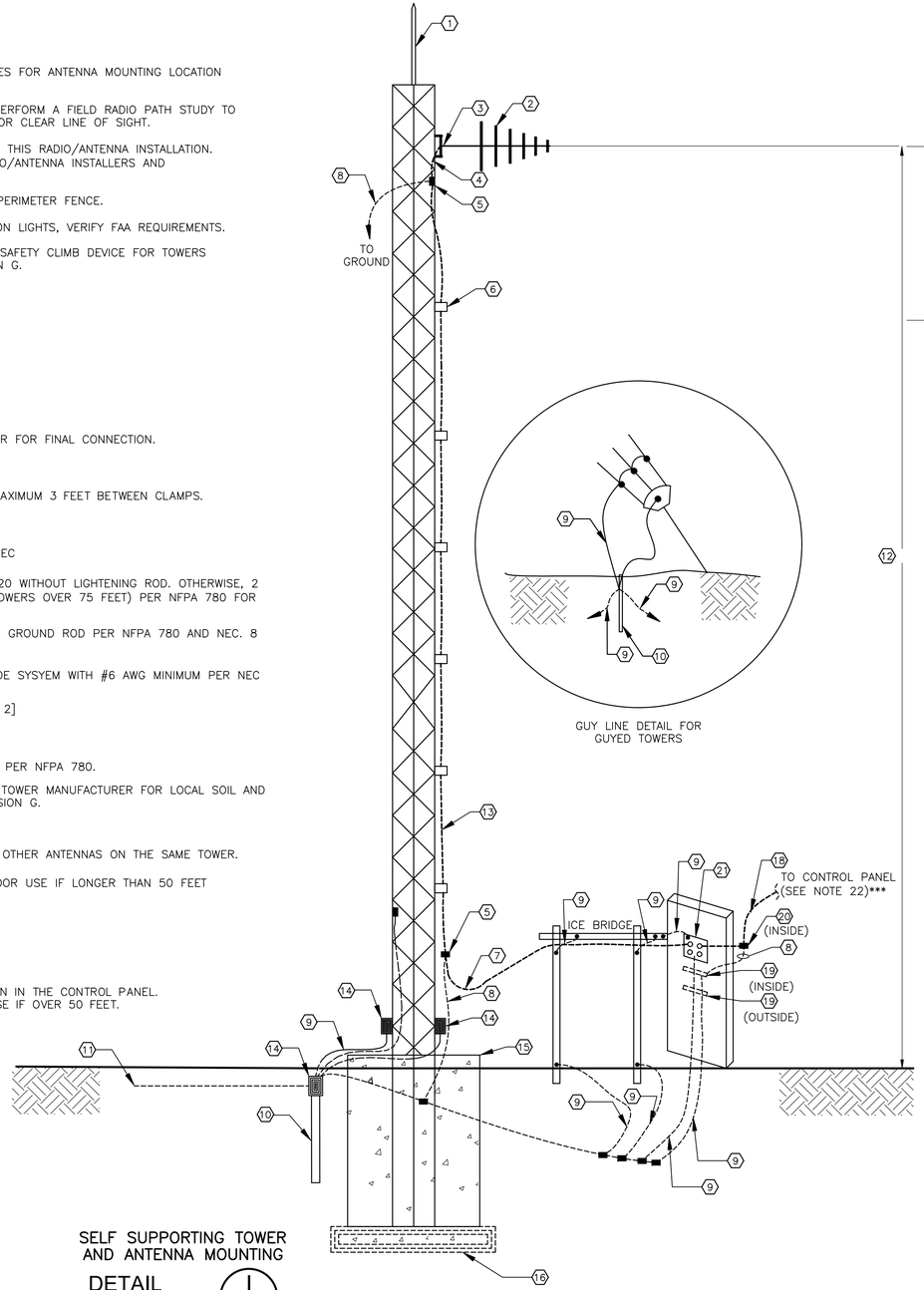

SELF SUPPORTING TOWER AND ANTENNA MOUNTING

DETAIL I

NTS

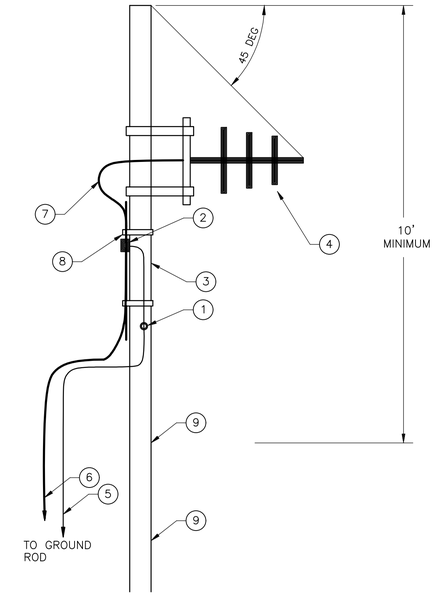

NOTES:

1. GROUND MAST WITH GROUNDING LUG AND CONNECT TO COPPER GROUND ROD OR STRUCTURE GROUND.
2. ANTENNA CABLE GROUNDING KIT. WIRE TO MAST GROUND.
3. ANTENNA MOUNTING MAST, 2" DIA. HOT DIP GALVANIZED.
4. ANTENNA.
5. MANUFACTURER RECOMMENDED COPPER GROUND WIRE.
6. ROUTE ANTENNA CABLE TO RADIO ENCLOSURE. CABLE HOUSING SHALL BE STAINLESS STEEL PIPE AT LEAST 1" IN DIAMETER. PIPE SHALL ENTER THE LCP FROM THE SIDE OF THE PANEL.
7. ANTENNA CABLE.
8. ANTENNA CABLE CLAMPS. HOT DIP GALVANIZED. CLAMP CABLE TO MAST AT 2' INTERVALS.
9. ANTENNA MAST SHALL BE SECURED TO THE STRUCTURE HANDRAILING TO WITHSTAND UP TO 135 MPH WINDS.
10. POLE FOR RADIO ANTENNA MUST BE PROVIDED. A MINIMUM 10 FT POLE MUST BE PROVIDED. FINAL HEIGHT OF ANTENNA TO BE DETERMINED IN ACCORDANCE WITH A RADIO PATH STUDY RECOMMENDATION DURING CONSTRUCTION. ANTENNA MAST SHALL EXTEND ABOVE THE ANTENNA A SUFFICIENT LENGTH TO PROVIDE A 45 DEG ANGLE "CONE" FOR LIGHTNING PROTECTION.

YAGI ANTENNA POLE MOUNT

DETAIL J

NTS

	ITEM	DESCRIPTION	MATERIAL
*	A	1 1/2" PROCESS CONNECTION	MATCH PIPE
*	B	1 1/2" X 3/4" BUSHING	304SS
*	C	3/4" NIPPLE	304SS
*	D	3/4" BALL VALVE	304SS
*	E	3/4" X 1/2" BUSHING	304SS
*	F	1/2" NIPPLE	304SS
*	G	PRESSURE GAUGE (PG)	SEE 407000

* DENOTES NOTE TO CONTRACTOR

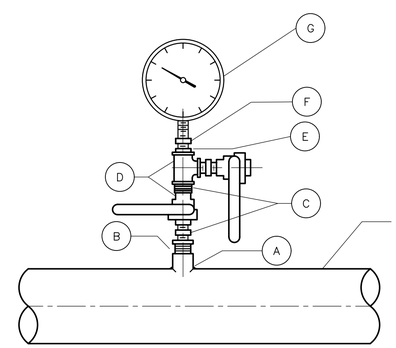

WHERE PROCESS PIPING IS HDPE, PVC OR CPVC, PROVIDE REDUCING TEE FOR THE PROCESS CONNECTION. THE REMAINING INSTRUMENT TREE SHALL REMAIN AS SHOWN.

PRESSURE DEVICE (SINGLE TREE)
STANDARD SERVICE TAP

DETAIL K

NTS

NOTES:

1. PROVIDE PROCESS CONNECTION (ITEM A) ACCORDING TO MECHANICAL DETAILS.
2. COMBINATION BLOCK AND BLEED MANIFOLD MAY BE INSTALLED IN PLACE OF BALL VALVES (ITEM D).
3. PROVIDE PRESSURE DEVICE (ITEM G) WHERE INDICATED ON THE DRAWINGS. REFER TO SPECS FOR GUIDANCE.
4. ROUTE FIELD WIRES FROM DEVICE TO JUNCTION BOX IN FLEXIBLE CONDUIT.

A. Paithankar

STATE OF TEXAS
ANJALI PAITHANKAR
121554
LICENSED
PROFESSIONAL ENGINEER

12/09/2023

REV. NO.	DATE	DRWN	CHKD	REMARKS

DESIGNED BY: K.KHALDI
DRAWN BY: K.KHALDI
SHEET CHK'D BY: A.PAITHANKAR
CROSS CHK'D BY: Y.ZHONG
APPROVED BY: A.PAITHANKAR
DATE: DECEMBER 2023

CDM Smith
8310-1 N Capital of Texas Hwy, Suite 250
Austin, TX 78731
Tel: (512) 346-1100
TBPELS Firm Registration No. F-3043

CITY OF GEORGETOWN, TEXAS

CEDAR BREAKS AND D B WOOD LIFT STATIONS

INSTRUMENTATION INSTALLATION DETAILS III

PROJECT NO. 2048-272644
FILE NAME: IZ-3

SHEET NO.
IZ-3

XREFs: [CDMS_2234, J.Haire- review stamp] Images: []
Last saved by: KHALDK Time: 9/2/2022 3:55:14 PM
pw:\\cdmsmith-pa02-pw.bentley.com:PW_EXT\124899\270866\04 Design Services LS NM_90%\10 Instrumentation\10 CADD\IZ-1.dwg
©2023 CDM SMITH ALL RIGHTS RESERVED
REUSE OF DOCUMENTS: THESE DOCUMENTS AND DESIGNS PROVIDED BY PROFESSIONAL SERVICE, INCORPORATED HEREIN, ARE THE PROPERTY OF CDM SMITH AND ARE NOT TO BE USED, IN WHOLE OR PART, FOR ANY OTHER PROJECT WITHOUT THE WRITTEN AUTHORIZATION OF CDM SMITH.

Plotted: 12/13/2023 9:36:35 AM

Temporary Stormwater Section

Texas Commission on Environmental Quality

for Regulated Activities on the Edwards Aquifer Recharge Zone and Relating to 30 TAC §213.5(b)(4)(A), (B), (D)(I) and (G); Effective June 1, 1999

To ensure that the application is administratively complete, confirm that all fields in the form are complete, verify that all requested information is provided, consistently reference the same site and contact person in all forms in the application, and ensure forms are signed by the appropriate party.

Note: Including all the information requested in the form and attachments contributes to more streamlined technical reviews.

Signature

To the best of my knowledge, the responses to this form accurately reflect all information requested concerning the proposed regulated activities and methods to protect the Edwards Aquifer. This **Temporary Stormwater Section** is hereby submitted for TCEQ review and executive director approval. The application was prepared by:

Print Name of Customer/Agent: Gerald S. Furrier

Date: 06/13/24

Signature of Customer/Agent:

Regulated Entity Name: South Lake to South Fork Wastewater Improvements

Project Information

Potential Sources of Contamination

Examples: Fuel storage and use, chemical storage and use, use of asphaltic products, construction vehicles tracking onto public roads, and existing solid waste.

1. Fuels for construction equipment and hazardous substances which will be used during construction:

   ☐ The following fuels and/or hazardous substances will be stored on the site: _____

   These fuels and/or hazardous substances will be stored in:

   ☐ Aboveground storage tanks with a cumulative storage capacity of less than 250 gallons will be stored on the site for less than one (1) year.

- ☐ Aboveground storage tanks with a cumulative storage capacity between 250 gallons and 499 gallons will be stored on the site for less than one (1) year.
- ☐ Aboveground storage tanks with a cumulative storage capacity of 500 gallons or more will be stored on the site. An Aboveground Storage Tank Facility Plan application must be submitted to the appropriate regional office of the TCEQ prior to moving the tanks onto the project.

☒ Fuels and hazardous substances will not be stored on the site.

2. ☒ **Attachment A - Spill Response Actions**. A site specific description of the measures to be taken to contain any spill of hydrocarbons or hazardous substances is attached.

3. ☒ Temporary aboveground storage tank systems of 250 gallons or more cumulative storage capacity must be located a minimum horizontal distance of 150 feet from any domestic, industrial, irrigation, or public water supply well, or other sensitive feature.

4. ☒ **Attachment B - Potential Sources of Contamination**. A description of any activities or processes which may be a potential source of contamination affecting surface water quality is attached.

Sequence of Construction

5. ☒ **Attachment C - Sequence of Major Activities**. A description of the sequence of major activities which will disturb soils for major portions of the site (grubbing, excavation, grading, utilities, and infrastructure installation) is attached.

   - ☒ For each activity described, an estimate (in acres) of the total area of the site to be disturbed by each activity is given.
   - ☒ For each activity described, include a description of appropriate temporary control measures and the general timing (or sequence) during the construction process that the measures will be implemented.

6. ☒ Name the receiving water(s) at or near the site which will be disturbed or which will receive discharges from disturbed areas of the project: Unnamed Creek and Middle Fork of San Gabriel River

Temporary Best Management Practices (TBMPs)

Erosion control examples: tree protection, interceptor swales, level spreaders, outlet stabilization, blankets or matting, mulch, and sod. Sediment control examples: stabilized construction exit, silt fence, filter dikes, rock berms, buffer strips, sediment traps, and sediment basins. Please refer to the Technical Guidance Manual for guidelines and specifications. All structural BMPs must be shown on the site plan.

7. ☒ **Attachment D – Temporary Best Management Practices and Measures**. TBMPs and measures will prevent pollution of surface water, groundwater, and stormwater. The construction-phase BMPs for erosion and sediment controls have been designed to retain sediment on site to the extent practicable. The following information is attached:

- ☒ A description of how BMPs and measures will prevent pollution of surface water, groundwater or stormwater that originates upgradient from the site and flows across the site.
- ☒ A description of how BMPs and measures will prevent pollution of surface water or groundwater that originates on-site or flows off site, including pollution caused by contaminated stormwater runoff from the site.
- ☒ A description of how BMPs and measures will prevent pollutants from entering surface streams, sensitive features, or the aquifer.
- ☒ A description of how, to the maximum extent practicable, BMPs and measures will maintain flow to naturally-occurring sensitive features identified in either the geologic assessment, TCEQ inspections, or during excavation, blasting, or construction.

8. ☒ The temporary sealing of a naturally-occurring sensitive feature which accepts recharge to the Edwards Aquifer as a temporary pollution abatement measure during active construction should be avoided.

   - ☐ **Attachment E - Request to Temporarily Seal a Feature**. A request to temporarily seal a feature is attached. The request includes justification as to why no reasonable and practicable alternative exists for each feature.
   - ☒ There will be no temporary sealing of naturally-occurring sensitive features on the site.

9. ☒ **Attachment F - Structural Practices**. A description of the structural practices that will be used to divert flows away from exposed soils, to store flows, or to otherwise limit runoff discharge of pollutants from exposed areas of the site is attached. Placement of structural practices in floodplains has been avoided.

10. ☒ **Attachment G - Drainage Area Map**. A drainage area map supporting the following requirements is attached:

    - ☐ For areas that will have more than 10 acres within a common drainage area disturbed at one time, a sediment basin will be provided.
    - ☐ For areas that will have more than 10 acres within a common drainage area disturbed at one time, a smaller sediment basin and/or sediment trap(s) will be used.
    - ☐ For areas that will have more than 10 acres within a common drainage area disturbed at one time, a sediment basin or other equivalent controls are not attainable, but other TBMPs and measures will be used in combination to protect down slope and side slope boundaries of the construction area.
    - ☐ There are no areas greater than 10 acres within a common drainage area that will be disturbed at one time. A smaller sediment basin and/or sediment trap(s) will be used in combination with other erosion and sediment controls within each disturbed drainage area.

☒ There are no areas greater than 10 acres within a common drainage area that will be disturbed at one time. Erosion and sediment controls other than sediment basins or sediment traps within each disturbed drainage area will be used.

11. ☐ **Attachment H - Temporary Sediment Pond(s) Plans and Calculations**. Temporary sediment pond or basin construction plans and design calculations for a proposed temporary BMP or measure have been prepared by or under the direct supervision of a Texas Licensed Professional Engineer. All construction plans and design information must be signed, sealed, and dated by the Texas Licensed Professional Engineer. Construction plans for the proposed temporary BMPs and measures are attached.

☒ N/A

12. ☒ **Attachment I - Inspection and Maintenance for BMPs.** A plan for the inspection of each temporary BMP(s) and measure(s) and for their timely maintenance, repairs, and, if necessary, retrofit is attached. A description of the documentation procedures, recordkeeping practices, and inspection frequency are included in the plan and are specific to the site and/or BMP.

13. ☒ All control measures must be properly selected, installed, and maintained in accordance with the manufacturer's specifications and good engineering practices. If periodic inspections by the applicant or the executive director, or other information indicate a control has been used inappropriately, or incorrectly, the applicant must replace or modify the control for site situations.

14. ☒ If sediment escapes the construction site, off-site accumulations of sediment must be removed at a frequency sufficient to minimize offsite impacts to water quality (e.g., fugitive sediment in street being washed into surface streams or sensitive features by the next rain).

15. ☒ Sediment must be removed from sediment traps or sedimentation ponds not later than when design capacity has been reduced by 50%. A permanent stake will be provided that can indicate when the sediment occupies 50% of the basin volume.

16. ☒ Litter, construction debris, and construction chemicals exposed to stormwater shall be prevented from becoming a pollutant source for stormwater discharges (e.g., screening outfalls, picked up daily).

Soil Stabilization Practices

Examples: establishment of temporary vegetation, establishment of permanent vegetation, mulching, geotextiles, sod stabilization, vegetative buffer strips, protection of trees, or preservation of mature vegetation.

17. ☒ **Attachment J - Schedule of Interim and Permanent Soil Stabilization Practices**. A schedule of the interim and permanent soil stabilization practices for the site is attached.

18. ☒ Records must be kept at the site of the dates when major grading activities occur, the dates when construction activities temporarily or permanently cease on a portion of the site, and the dates when stabilization measures are initiated.

19. ☒ Stabilization practices must be initiated as soon as practicable where construction activities have temporarily or permanently ceased.

Administrative Information

20. ☒ All structural controls will be inspected and maintained according to the submitted and approved operation and maintenance plan for the project.

21. ☒ If any geologic or manmade features, such as caves, faults, sinkholes, etc., are discovered, all regulated activities near the feature will be immediately suspended. The appropriate TCEQ Regional Office shall be immediately notified. Regulated activities must cease and not continue until the TCEQ has reviewed and approved the methods proposed to protect the aquifer from any adverse impacts.

22. ☒ Silt fences, diversion berms, and other temporary erosion and sediment controls will be constructed and maintained as appropriate to prevent pollutants from entering sensitive features discovered during construction.

City of Georgetown

South Lake to South Fork Wastewater Improvements

Water Pollution Abatement Plan

Reportable contaminant quantities will be determined and based on 30 TAC §327. In the event of any spill of hydrocarbon products or hazardous substances of reportable quantities the following spill response actions will be taken:

1. Williamson County Emergency Services will be notified of the nature and extent of the spill via telephone (911 or 512-864-8200).
2. TCEQ Spill Reporting 24-hour Hotline will be notified of the nature and extent of the spill via telephone (800-832-8224).
3. Spills will be reported prior to any spill response activities.
4. Absorbent materials will be used to contain small scale spill incidents.
5. Absorbent containment booms will be used to contain the discharge of larger scale spill incidents.
6. Any spill response action will follow applicable OSHA health and safety regulations.
7. Any water materials generated by spill response actions will be properly stored and disposed.

City of Georgetown

South Lake to South Fork Wastewater Improvements

Water Pollution Abatement Plan

Potential sources of contamination related to this project include:

- Sediment from spoil piles transported during stormwater events
- Accidental leakage of fuels from vehicles or equipment during construction activities

All necessary actions to minimize impacts of contamination will be taken before, during, and after the proposed project and in coordination with Attachment A, Spill Response Actions. Other than a potential incidental leak from construction vehicles or equipment, all additional runoff will be from natural sources.

City of Georgetown

South Lake to South Fork Wastewater Improvements

Water Pollution Abatement Plan

The sequence for the construction of the proposed project improvements at the Cedar Breaks Lift Station and D B Wood Lift Station sites are planned as follows:

- Following issuance of notice-to-proceed, Contractor installs silt fencing, tree protection, and stabilized construction entrance.
- Contractor clears site areas and prepares site for construction. (0.52 acres and 1.68 acres)
- Contractor constructs temporary construction access roads.
- Contractor performs excavation for new lift stations.
- Contractor constructs the wet well, concrete slabs and pads, and lift stations.
- Contractor installs associated piping for lift stations.
- Contractor installs all the process mechanical equipment, piping and electrical improvements in the buildings and structures.
- Contractor installs concrete pavement.
- Contractor completes site construction and initiates site clean-up. (0.52 acres and 1.68 acres)
- Contractor inspects and maintains temporary erosion and sedimentation controls throughout the term of the project.
- Contractor restores disturbed soil areas with loaming and hydro-seeding and establishes vegetated filter strips.

City of Georgetown

South Lake to South Fork Wastewater Improvements

Water Pollution Abatement Plan

Temporary erosion and sedimentation control measures will include:

- Silt fencing;
- Rock berms;
- Concrete wash down area;
- Tree protection;
- Stabilized Construction Entrance (SCE);

Silt fencing shall be placed downgradient from the proposed site areas to control and filter any stormwater that may be generated from the proposed project site. Silt fencing shall also be placed around the perimeter of any storm drain inlets located on or downgradient of the proposed project area when installed. No significant runon from upgradient stormwater flows are anticipated due to the silt fencing. The silt fencing will further serve to control any stormwater generated by the proposed project site before it is allowed to discharge as stormwater-sediment flow from the site.

Rock berms shall be placed downgradient of proposed site areas to control and filter any concentrated stormwater that may be generated from the proposed project site.

A concrete wash out area will be placed on site in order to wash out trucks onto a designated area and not into storm drains or streams. It will also prevent excess concrete to be dumped onsite.

Tree protection will be placed around the critical root zone of protected trees on the proposed project site. This control measure will prevent erosion near the roots and protect the roots from being damaged by construction activities.

A stabilized construction entrance will be installed at the entrance of the construction area to minimize the tracking of sediments from the project site. All access to the construction site will use this SCE.

The area will remain vegetated where possible.

These temporary erosion and sedimentation control measures are indicated on the site drawings and will be put in place before the start of construction and shall remain in place for the duration of site construction activities.

City of Georgetown

South Lake to South Fork Wastewater Improvements

Water Pollution Abatement Plan

Structural Practices that will be used to limit the runoff discharge of sediments and pollutants from exposed areas of the proposed project include the following practices:

- Silt fencing;
- Rock berms;
- Concrete wash down area;
- Stabilized Construction Entrance (SCE);

These practices are described in Attachment D, Temporary BMPs and Measures. No temporary structural facilities, such as sedimentation ponds, will be constructed or used during construction activities.

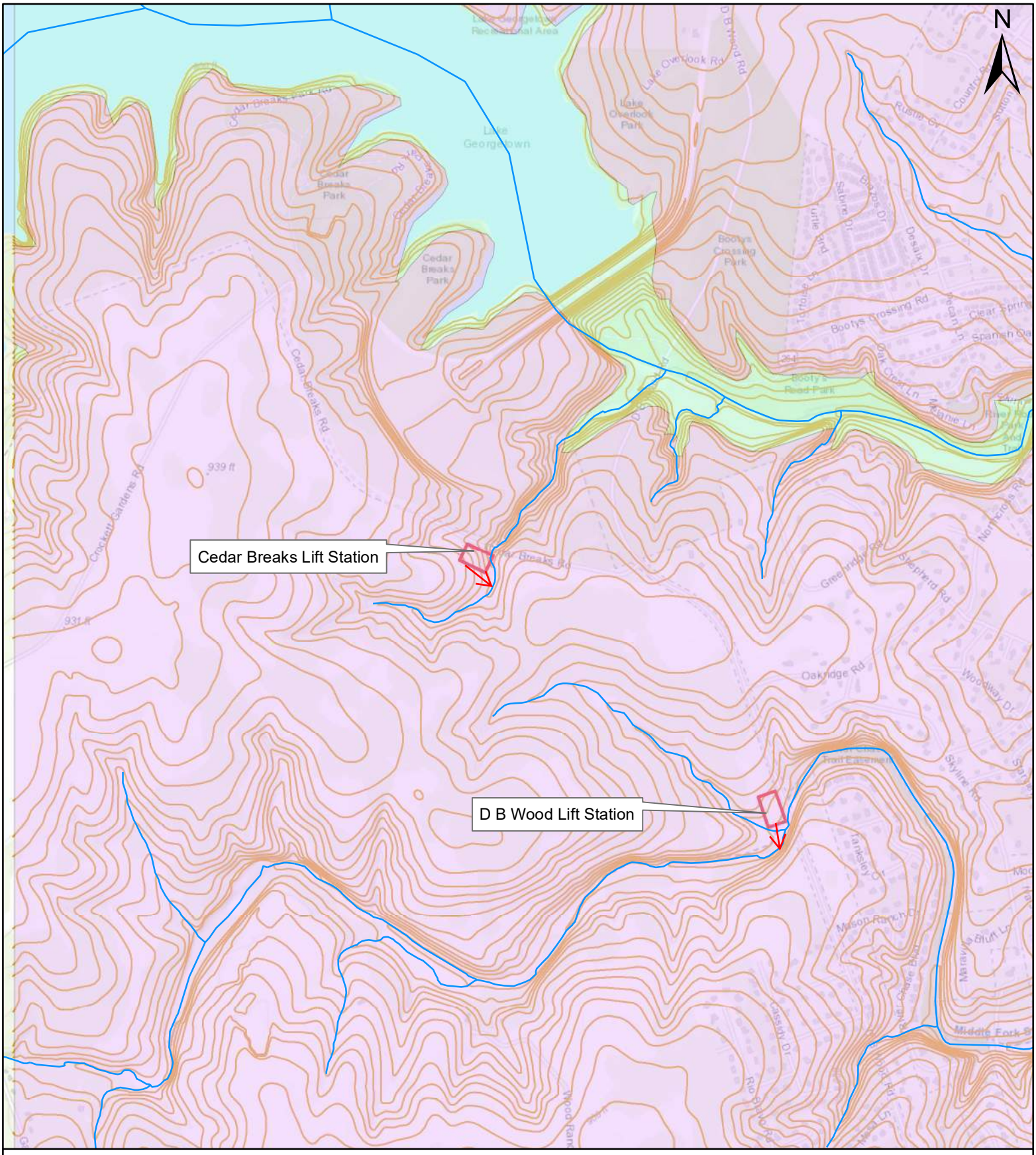

Legend

- Rivers/Streams
- Contours

Edwards Aquifer Zones

TYPE

- Edwards Aquifer Contributing Zone
- Edwards Aquifer Recharge Zone
- Edwards Aquifer Transition Zone

Attachment G: Drainage Area Map
South Lake to South Fork Wastewater Improvements
Williamson County, Texas

0 0.25 0.5 Miles

CDM Smith

City of Georgetown

South Lake to South Fork Wastewater Improvements

Water Pollution Abatement Plan

Silt fencing, rock berms, and the stabilized construction entrance shall be inspected once per week and following every significant rainfall event (of at least 0.1 inch or greater). If such inspections reveal that additional measurements are needed to prevent movement of sedimentation to offsite areas, the Contractor shall promptly install additional erosion control devices as may be required.

Silt fences shall be maintained and repaired as follows:

- Remove accumulated sediment once build up reaches 6 inches
- Replace torn or damaged filter fabric
- Make any other repairs or adjustments, as needed, to ensure the silt fencing is functioning properly

Rock berms shall be maintained and repaired as follows:

- Remove accumulated sediment once build up reaches 6 inches
- Repair any loose wire sheathing or reshape as needed
- Make any other repairs or adjustments, as needed, to ensure the rock berm is functioning properly

The stabilized construction entrance will also be inspected following precipitation events and stone will be replaced if silt accumulation is found to hinder the role of this BMP to minimize the off-site tracking of sediment.

Concrete washout areas shall be inspected daily and after every significant rainfall event (of at least 0.1 inch or greater) to check for leaks, identify any plastic linings and sidewalls have been damaged by construction activities or if they are over 75% capacity. When the washout area is over 75% capacity the wash water shall be removed or allowed to evaporate to avoid overflows. The hardened cement solids shall be removed and recycled.

City of Georgetown

South Lake to South Fork Wastewater Improvements

Water Pollution Abatement Plan

Temporary soil stabilization practices will include minimizing soil disturbance during construction and hydroseeding of temporary vegetation in disturbed areas. These temporary soil stabilization practices will be initiated as soon as practicable in portions of the site where construction activities have temporarily or permanently ceased, but in no case more than 14 days after the construction activity in that portion of the site has temporarily or permanently ceased. These interim measures will be inspected, maintained, and will remain in place for the duration of the construction phase of the project. These control measures will be planned and implemented in accordance with the Edwards Aquifer Technical Guidance Manual.

Permanent soil stabilization and site restoration will occur prior to project completion. Permanent soil stabilization measures will include the loaming, hydroseeding, and re-vegetation of the disturbed areas using a native grass mix that is properly monitored and managed until long-term vegetation stabilization has occurred. Permanent vegetated filter strips will also be established in places shown on the construction plan sheets.

Permanent Stormwater Section

Texas Commission on Environmental Quality

for Regulated Activities on the Edwards Aquifer Recharge Zone and Relating to 30 TAC §213.5(b)(4)(C), (D)(Ii), (E), and (5), Effective June 1, 1999

To ensure that the application is administratively complete, confirm that all fields in the form are complete, verify that all requested information is provided, consistently reference the same site and contact person in all forms in the application, and ensure forms are signed by the appropriate party.

Note: Including all the information requested in the form and attachments contributes to more streamlined technical reviews.

Signature

To the best of my knowledge, the responses to this form accurately reflect all information requested concerning the proposed regulated activities and methods to protect the Edwards Aquifer. This **Permanent Stormwater Section** is hereby submitted for TCEQ review and executive director approval. The application was prepared by:

Print Name of Customer/Agent: Gerald S. Furrier

Date: 06/13/24

Signature of Customer/Agent

Regulated Entity Name: South Lake to South Fork Wastewater Improvements

Permanent Best Management Practices (BMPs)

Permanent best management practices and measures that will be used during and after construction is completed.

1. ☒ Permanent BMPs and measures must be implemented to control the discharge of pollution from regulated activities after the completion of construction.

   ☐ N/A

2. ☒ These practices and measures have been designed, and will be constructed, operated, and maintained to insure that 80% of the incremental increase in the annual mass loading of total suspended solids (TSS) from the site caused by the regulated activity is removed. These quantities have been calculated in accordance with technical guidance prepared or accepted by the executive director.

   ☒ The TCEQ Technical Guidance Manual (TGM) was used to design permanent BMPs and measures for this site.

- ☐ A technical guidance other than the TCEQ TGM was used to design permanent BMPs and measures for this site. The complete citation for the technical guidance that was used is: _____

☐ N/A

3. ☒ Owners must insure that permanent BMPs and measures are constructed and function as designed. A Texas Licensed Professional Engineer must certify in writing that the permanent BMPs or measures were constructed as designed. The certification letter must be submitted to the appropriate regional office within 30 days of site completion.

   ☐ N/A

4. Where a site is used for low density single-family residential development and has 20 % or less impervious cover, other permanent BMPs are not required. This exemption from permanent BMPs must be recorded in the county deed records, with a notice that if the percent impervious cover increases above 20% or land use changes, the exemption for the whole site as described in the property boundaries required by 30 TAC §213.4(g) (relating to Application Processing and Approval), may no longer apply and the property owner must notify the appropriate regional office of these changes.

   - ☐ The site will be used for low density single-family residential development and has 20% or less impervious cover.
   - ☐ The site will be used for low density single-family residential development but has more than 20% impervious cover.
   - ☒ The site will not be used for low density single-family residential development.

5. The executive director may waive the requirement for other permanent BMPs for multi-family residential developments, schools, or small business sites where 20% or less impervious cover is used at the site. This exemption from permanent BMPs must be recorded in the county deed records, with a notice that if the percent impervious cover increases above 20% or land use changes, the exemption for the whole site as described in the property boundaries required by 30 TAC §213.4(g) (relating to Application Processing and Approval), may no longer apply and the property owner must notify the appropriate regional office of these changes.

   - ☐ **Attachment A - 20% or Less Impervious Cover Waiver**. The site will be used for multi-family residential developments, schools, or small business sites and has 20% or less impervious cover. A request to waive the requirements for other permanent BMPs and measures is attached.
   - ☐ The site will be used for multi-family residential developments, schools, or small business sites but has more than 20% impervious cover.
   - ☒ The site will not be used for multi-family residential developments, schools, or small business sites.

6. ☒ **Attachment B - BMPs for Upgradient Stormwater**.

- ☒ A description of the BMPs and measures that will be used to prevent pollution of surface water, groundwater, or stormwater that originates upgradient from the site and flows across the site is attached.
- ☐ No surface water, groundwater or stormwater originates upgradient from the site and flows across the site, and an explanation is attached.
- ☐ Permanent BMPs or measures are not required to prevent pollution of surface water, groundwater, or stormwater that originates upgradient from the site and flows across the site, and an explanation is attached.

7. ☒ **Attachment C - BMPs for On-site Stormwater**.

   - ☒ A description of the BMPs and measures that will be used to prevent pollution of surface water or groundwater that originates on-site or flows off the site, including pollution caused by contaminated stormwater runoff from the site is attached.
   - ☐ Permanent BMPs or measures are not required to prevent pollution of surface water or groundwater that originates on-site or flows off the site, including pollution caused by contaminated stormwater runoff, and an explanation is attached.

8. ☒ **Attachment D - BMPs for Surface Streams**. A description of the BMPs and measures that prevent pollutants from entering surface streams, sensitive features, or the aquifer is attached. Each feature identified in the Geologic Assessment as sensitive has been addressed.

   ☐ N/A

9. ☒ The applicant understands that to the extent practicable, BMPs and measures must maintain flow to naturally occurring sensitive features identified in either the geologic assessment, executive director review, or during excavation, blasting, or construction.

   - ☒ The permanent sealing of or diversion of flow from a naturally-occurring sensitive feature that accepts recharge to the Edwards Aquifer as a permanent pollution abatement measure has not been proposed.
   - ☐ **Attachment E - Request to Seal Features**. A request to seal a naturally-occurring sensitive feature, that includes, for each feature, a justification as to why no reasonable and practicable alternative exists, is attached.

10. ☒ **Attachment F - Construction Plans**. All construction plans and design calculations for the proposed permanent BMP(s) and measures have been prepared by or under the direct supervision of a Texas Licensed Professional Engineer, and are signed, sealed, and dated. The plans are attached and, if applicable include:

    - ☒ Design calculations (TSS removal calculations)
    - ☒ TCEQ construction notes
    - ☒ All geologic features
    - ☒ All proposed structural BMP(s) plans and specifications

    ☐ N/A

11. ☒ **Attachment G - Inspection, Maintenance, Repair and Retrofit Plan**. A plan for the inspection, maintenance, repairs, and, if necessary, retrofit of the permanent BMPs and measures is attached. The plan includes all of the following:

    ☒ Prepared and certified by the engineer designing the permanent BMPs and measures
    ☒ Signed by the owner or responsible party
    ☒ Procedures for documenting inspections, maintenance, repairs, and, if necessary retrofit
    ☒ A discussion of record keeping procedures

    ☐ N/A

12. ☐ **Attachment H - Pilot-Scale Field Testing Plan**. Pilot studies for BMPs that are not recognized by the Executive Director require prior approval from the TCEQ. A plan for pilot-scale field testing is attached.

    ☒ N/A

13. ☒ **Attachment I -Measures for Minimizing Surface Stream Contamination**. A description of the measures that will be used to avoid or minimize surface stream contamination and changes in the way in which water enters a stream as a result of the construction and development is attached. The measures address increased stream flashing, the creation of stronger flows and in-stream velocities, and other in-stream effects caused by the regulated activity, which increase erosion that results in water quality degradation.

    ☐ N/A

Responsibility for Maintenance of Permanent BMP(s)

Responsibility for maintenance of best management practices and measures after construction is complete.

14. ☒ The applicant is responsible for maintaining the permanent BMPs after construction until such time as the maintenance obligation is either assumed in writing by another entity having ownership or control of the property (such as without limitation, an owner's association, a new property owner or lessee, a district, or municipality) or the ownership of the property is transferred to the entity. Such entity shall then be responsible for maintenance until another entity assumes such obligations in writing or ownership is transferred.

    ☐ N/A

15. ☒ A copy of the transfer of responsibility must be filed with the executive director at the appropriate regional office within 30 days of the transfer if the site is for use as a multiple single-family residential development, a multi-family residential development, or a non-residential development such as commercial, industrial, institutional, schools, and other sites where regulated activities occur.

    ☐ N/A

City of Georgetown

South Lake to South Fork Wastewater Improvements

Water Pollution Abatement Plan

There is a slight amount of undeveloped land upgradient of the Cedar Breaks Lift Station and D B Woods Lift Station that will generate stormwater towards the storm during storm events. See Attachment F – Construction Plans and the construction plan set for further details.

Upgradient flow comes from the west and southwest of the Cedar Breaks Lift Station. The offsite runoff will be diverted using a swale on the west and south boundary of the Cedar Breaks Lift Station. The offsite runoff does not enter the Cedar Breaks Lift Station site. There are no land disturbances proposed for the offsite contributing area.

Upgradient flow comes from the north and northwest of the D B Wood Lift Station. The offsite runoff coming from the north will follow the existing flow pattern and eventually discharge into the Middle Fork of San Gabriel River. The offsite runoff coming from the north and northwest will not enter the lift station site and will follow the existing flow pattern. The vegetated filter strip is shown at the downstream side of the proposed lift station site.

City of Georgetown

South Lake to South Fork Wastewater Improvements

Water Pollution Abatement Plan

Due to the site going from undeveloped to 0.09 acres of impervious cover, there is a need for BMPs to treat stormwater flows for Cedar Breaks Lift Station site. Onsite flow for Cedar Breaks Lift Station will flow from southwest to east-northeast of the site. The runoff flowing will be picked up by vegetated filter strips.

The D B Wood Rd Lift Station site will go from undeveloped to 0.30 acres of impervious cover. Onsite flow for D B Wood Rd will flow from north to south of the lift station site. The runoff flowing from the north will be picked up by the vegetated filter strip. The vegetated filter strips have been sized with the onsite flows in mind, no land disturbance is proposed for the offsite contributing areas. See Attachment F – Construction Plans and the construction plan set for further details.

The on-site stormwater will be filtered by silt fence as the main temporary BMP. Site runoff will be conveyed offsite by overland sheet flow.

City of Georgetown

South Lake to South Fork Wastewater Improvements

Water Pollution Abatement Plan

Vegetated filter strips, mulch sock, silt fence, and rock berm will be placed on the Cedar Breaks Lift Station site and D B Wood Lift Station site. The onsite runoff will be picked up by the vegetated filter strips. See Attachment F – Construction Plans and the construction plan set for further details.

During construction, the temporary BMPs as seen in **Attachment D of the Temporary Stormwater section** will be used.

City of Georgetown

South Lake to South Fork Wastewater Improvements

Water Pollution Abatement Plan

The construction drawings are provided as part of this South Lake to South Fork Wastewater Improvements design set. The project's design drawings provide civil and environmental drawings including grading, erosion control, staging, and fencing plans. The following permanent BMPs are detailed and specified:

- Vegetative Filter Strips (VFS)

Vegetative filter strips will serve as the primary permanent stormwater control for the site's long-term period. It will be installed downgradient of the disturbed area to protect flooding, erosion, and water quality for offsite areas. All other disturbed sites will be re-vegetated and hydroseeded that will act as a linear vegetation strip in the long term to further help water quality from the site.

Based on calculations below using the TSS Removal Calculations spreadsheet from TCEQ, the required load reduction for the Cedar Break Lift Station site is 78 lbs/yr of TSS and 261 lbs/yr of TSS for D B Wood Lift Station site. Vegetative filter strips have a removal efficiency of 85%. Based on this and equation 3.7 on page 3-33 of RG-348 the maximum load removal for VFS is 91 lbs/yr of TSS for Cedar Break Lift Station site and 303 lbs/yr of TSS for D B Wood Lift Station site. Vegetative filters strips are sufficient permanent BMPs to implement on this site to reduce TSS loads.

This control will limit runoff discharge of pollutants from exposed areas of the site after project construction activities. The vegetative filter strips will be put in after all construction activities are completed. These control measures will protect the downgradient offsite areas.

See the construction plan CR sheets for design plans and layout for the VFS. Both TCEQ RG-348 Technical Guidance on Best Management Practices and the City of Austin Environmental Criteria Manual were used to design and size the permanent BMP.

TSS Removal Calculations

Cedar Breaks Lift Station
Georgetown, TX

Texas Commission on Environmental Quality

TSS Removal Calculations 04-20-2009

Project Name: **SL to SF WW Interceptor**
Date Prepared: **4/26/2024**

Additional information is provided for cells with a red triangle in the upper right corner. Place the cursor over the cell.
Text shown in blue indicate location of instructions in the Technical Guidance Manual - RG-348.
Characters shown in red are data entry fields.
Characters shown in black (Bold) are calculated fields. Changes to these fields will remove the equations used in the spreadshee

1. The Required Load Reduction for the total project: Calculations from RG-348 Pages 3-27 to 3-30

Page 3-29 Equation 3.3: $L_M = 27.2(A_N \times P)$

where:
$L_{M\ TOTAL\ PROJECT}$ = Required TSS removal resulting from the proposed development = 80% of increased lc
A_N = Net increase in impervious area for the project
P = Average annual precipitation, inches

Site Data: Determine Required Load Removal Based on the Entire Project

County =	**Williamson**	
Total project area included in plan * =	**0.52**	acres
Predevelopment impervious area within the limits of the plan * =	**0.00**	acres
Total post-development impervious area within the limits of the plan* =	**0.09**	acres
Total post-development impervious cover fraction * =	**0.17**	
P =	**32**	inches
$L_{M\ TOTAL\ PROJECT}$ =	**78**	lbs.

*** The values entered in these fields should be for the total project area.**

Number of drainage basins / outfalls areas leaving the plan area = **1**

2. Drainage Basin Parameters (This information should be provided for each basin):

Drainage Basin/Outfall Area No. = **Cedar Breaks**

Total drainage basin/outfall area =	**0.52**	acres
Predevelopment impervious area within drainage basin/outfall area =	**0.00**	acres
Post-development impervious area within drainage basin/outfall area =	**0.09**	acres
Post-development impervious fraction within drainage basin/outfall area =	**0.17**	
$L_{M\ THIS\ BASIN}$ =	**78**	lbs.

3. Indicate the proposed BMP Code for this basin.

Proposed BMP = **Vegetated Filter Strips**
Removal efficiency = **85** percent

Aqualogic Cartridge Filter
Bioretention
Contech StormFilter
Constructed Wetland
Extended Detention
Grassy Swale
Retention / Irrigation
Sand Filter
Stormceptor
Vegetated Filter Strips
Vortechs
Wet Basin
Wet Vault

4. Calculate Maximum TSS Load Removed (L_R) for this Drainage Basin by the selected BMP Type.

RG-348 Page 3-33 Equation 3.7: $L_R = (\text{BMP efficiency}) \times P \times (A_I \times 34.6 + A_P \times 0.54)$

where:
A_C = Total On-Site drainage area in the BMP catchment area
A_I = Impervious area proposed in the BMP catchment area
A_P = Pervious area remaining in the BMP catchment area
L_R = TSS Load removed from this catchment area by the proposed BMP

A_C =	**0.52**	acres
A_I =	**0.09**	acres
A_P =	**0.43**	acres
L_R =	**91**	lbs

5. Calculate Fraction of Annual Runoff to Treat the drainage basin / outfall area

Desired $L_{M\ THIS\ BASIN}$ = **91** lbs.

F = **1.00**

6. Calculate Capture Volume required by the BMP Type for this drainage basin / outfall area. Calculations from RG-348 Pages 3-34 to 3-36

Rainfall Depth = **4.00** inches
Post Development Runoff Coefficient = **0.18**
On-site Water Quality Volume = **1380** cubic feet

Calculations from RG-348 Pages 3-36 to 3-37

Off-site area draining to BMP = **0.00** acres
Off-site Impervious cover draining to BMP = **0.00** acres
Impervious fraction of off-site area = **0**
Off-site Runoff Coefficient = **0.00**
Off-site Water Quality Volume = **0** cubic feet

Storage for Sediment = **276**
Total Capture Volume (required water quality volume(s) x 1.20) = **1656** cubic feet

The following sections are used to calculate the required water quality volume(s) for the selected BMP.
The values for BMP Types not selected in cell C45 will show NA.

7. Retention/Irrigation System Designed as Required in RG-348 Pages 3-42 to 3-46

Required Water Quality Volume for retention basin = **NA** cubic feet

Irrigation Area Calculations:

Soil infiltration/permeability rate = **0.1** in/hr **Enter determined permeability rate or assumed value**
Irrigation area = **NA** square feet
NA acres

8. Extended Detention Basin System Designed as Required in RG-348 Pages 3-46 to 3-51

Required Water Quality Volume for extended detention basin = **NA** cubic feet

9. Filter area for Sand Filters Designed as Required in RG-348 Pages 3-58 to 3-63

9A. Full Sedimentation and Filtration System

Water Quality Volume for sedimentation basin = **NA** cubic feet

Minimum filter basin area = **NA** square feet

Maximum sedimentation basin area = **NA** square feet **For minimum water depth of 2 feet**
Minimum sedimentation basin area = **NA** square feet **For maximum water depth of 8 feet**

9B. Partial Sedimentation and Filtration System

Water Quality Volume for combined basins = **NA** cubic feet

Minimum filter basin area = **NA** square feet

Maximum sedimentation basin area = **NA** square feet **For minimum water depth of 2 feet**
Minimum sedimentation basin area = **NA** square feet **For maximum water depth of 8 feet**

10. Bioretention System Designed as Required in RG-348 Pages 3-63 to 3-65

Required Water Quality Volume for Bioretention Basin = **NA** cubic feet

11. Wet Basins Designed as Required in RG-348 Pages 3-66 to 3-71

Required capacity of Permanent Pool = **NA** cubic feet **Permanent Pool Capacity is 1.20 times the WQV**
Required capacity at WQV Elevation = **NA** cubic feet **Total Capacity should be the Permanent Pool Capacity plus a second WQV.**

12. Constructed Wetlands Designed as Required in RG-348 Pages 3-71 to 3-73

Required Water Quality Volume for Constructed Wetlands = **NA** cubic feet

13. AquaLogic™ Cartridge System Designed as Required in RG-348 Pages 3-74 to 3-78

16. Vegetated Filter Strips Designed as Required in RG-348 Pages 3-55 to 3-57

There are no calculations required for determining the load or size of vegetative filter strips.
The 80% removal is provided when the contributing drainage area does not exceed 72 feet (direction of flow) and the sheet flow leaving the impervious cover is directed across 15 feet of engineered filter strips with maximum slope of 20% or across 50 feet of natural vegetation with a maximum slope of 10%. There can be a break in grade as long as no slope exceeds 20%.

If vegetative filter strips are proposed for an interim permanent BMP, they may be sized as described on Page 3-56 of RG-348.

TSS Removal Calculations

D B Wood Lift Station
Georgetown, TX

Texas Commission on Environmental Quality

TSS Removal Calculations 04-20-2009

Project Name: **SL to SF WW Interceptor**
Date Prepared: **4/26/2024**

Additional information is provided for cells with a red triangle in the upper right corner. Place the cursor over the cell.
Text shown in blue indicate location of instructions in the Technical Guidance Manual - RG-348.
Characters shown in red are data entry fields.
Characters shown in black (Bold) are calculated fields. Changes to these fields will remove the equations used in the spreadshee

1. The Required Load Reduction for the total project: Calculations from RG-348 Pages 3-27 to 3-30

Page 3-29 Equation 3.3: $L_M = 27.2(A_N \times P)$

where:
$L_{M\ TOTAL\ PROJECT}$ = Required TSS removal resulting from the proposed development = 80% of increased lc
A_N = Net increase in impervious area for the project
P = Average annual precipitation, inches

Site Data: Determine Required Load Removal Based on the Entire Project

County =	**Williamson**	
Total project area included in plan * =	**1.69**	acres
Predevelopment impervious area within the limits of the plan * =	**0.00**	acres
Total post-development impervious area within the limits of the plan* =	**0.30**	acres
Total post-development impervious cover fraction * =	**0.18**	
P =	**32**	inches
$L_{M\ TOTAL\ PROJECT}$ =	**261**	lbs.

*** The values entered in these fields should be for the total project area.**

Number of drainage basins / outfalls areas leaving the plan area = **1**

2. Drainage Basin Parameters (This information should be provided for each basin):

Drainage Basin/Outfall Area No. = **D B Wood**

Total drainage basin/outfall area =	**1.69**	acres
Predevelopment impervious area within drainage basin/outfall area =	**0.00**	acres
Post-development impervious area within drainage basin/outfall area =	**0.30**	acres
Post-development impervious fraction within drainage basin/outfall area =	**0.18**	
$L_{M\ THIS\ BASIN}$ =	**261**	lbs.

3. Indicate the proposed BMP Code for this basin.

Proposed BMP = **Vegetated Filter Strips**
Removal efficiency = **85** percent

Aqualogic Cartridge Filter
Bioretention
Contech StormFilter
Constructed Wetland
Extended Detention
Grassy Swale
Retention / Irrigation
Sand Filter
Stormceptor
Vegetated Filter Strips
Vortechs
Wet Basin
Wet Vault

4. Calculate Maximum TSS Load Removed (L_R) for this Drainage Basin by the selected BMP Type.

RG-348 Page 3-33 Equation 3.7: $L_R = (\text{BMP efficiency}) \times P \times (A_I \times 34.6 + A_P \times 0.54)$

where:
A_C = Total On-Site drainage area in the BMP catchment area
A_I = Impervious area proposed in the BMP catchment area
A_P = Pervious area remaining in the BMP catchment area
L_R = TSS Load removed from this catchment area by the proposed BMP

A_C =	**1.69**	acres
A_I =	**0.30**	acres
A_P =	**1.39**	acres
L_R =	**303**	lbs

5. Calculate Fraction of Annual Runoff to Treat the drainage basin / outfall area

Desired $L_{M\ THIS\ BASIN}$ = **303** lbs.

F = **1.00**

6. Calculate Capture Volume required by the BMP Type for this drainage basin / outfall area. Calculations from RG-348 Pages 3-34 to 3-36

Rainfall Depth = **4.00** inches
Post Development Runoff Coefficient = **0.19**
On-site Water Quality Volume = **4561** cubic feet

Calculations from RG-348 Pages 3-36 to 3-37

Off-site area draining to BMP = **0.00** acres
Off-site Impervious cover draining to BMP = **0.00** acres
Impervious fraction of off-site area = **0**
Off-site Runoff Coefficient = **0.00**
Off-site Water Quality Volume = **0** cubic feet

Storage for Sediment = **912**
Total Capture Volume (required water quality volume(s) x 1.20) = **5474** cubic feet

The following sections are used to calculate the required water quality volume(s) for the selected BMP.
The values for BMP Types not selected in cell C45 will show NA.

7. Retention/Irrigation System Designed as Required in RG-348 Pages 3-42 to 3-46

Required Water Quality Volume for retention basin = **NA** cubic feet

Irrigation Area Calculations:

Soil infiltration/permeability rate = **0.1** in/hr **Enter determined permeability rate or assumed value**
Irrigation area = **NA** square feet
NA acres

8. Extended Detention Basin System Designed as Required in RG-348 Pages 3-46 to 3-51

Required Water Quality Volume for extended detention basin = **NA** cubic feet

9. Filter area for Sand Filters Designed as Required in RG-348 Pages 3-58 to 3-63

9A. Full Sedimentation and Filtration System

Water Quality Volume for sedimentation basin = **NA** cubic feet

Minimum filter basin area = **NA** square feet

Maximum sedimentation basin area = **NA** square feet **For minimum water depth of 2 feet**
Minimum sedimentation basin area = **NA** square feet **For maximum water depth of 8 feet**

9B. Partial Sedimentation and Filtration System

Water Quality Volume for combined basins = **NA** cubic feet

Minimum filter basin area = **NA** square feet

Maximum sedimentation basin area = **NA** square feet **For minimum water depth of 2 feet**
Minimum sedimentation basin area = **NA** square feet **For maximum water depth of 8 feet**

10. Bioretention System Designed as Required in RG-348 Pages 3-63 to 3-65

Required Water Quality Volume for Bioretention Basin = **NA** cubic feet

11. Wet Basins Designed as Required in RG-348 Pages 3-66 to 3-71

Required capacity of Permanent Pool = **NA** cubic feet **Permanent Pool Capacity is 1.20 times the WQV**
Required capacity at WQV Elevation = **NA** cubic feet **Total Capacity should be the Permanent Pool Capacity plus a second WQV.**

12. Constructed Wetlands Designed as Required in RG-348 Pages 3-71 to 3-73

Required Water Quality Volume for Constructed Wetlands = **NA** cubic feet

13. AquaLogic™ Cartridge System Designed as Required in RG-348 Pages 3-74 to 3-78

16. Vegetated Filter Strips Designed as Required in RG-348 Pages 3-55 to 3-57

There are no calculations required for determining the load or size of vegetative filter strips.
The 80% removal is provided when the contributing drainage area does not exceed 72 feet (direction of flow) and the sheet flow leaving the impervious cover is directed across 15 feet of engineered filter strips with maximum slope of 20% or across 50 feet of natural vegetation with a maximum slope of 10%. There can be a break in grade as long as no slope exceeds 20%.

If vegetative filter strips are proposed for an interim permanent BMP, they may be sized as described on Page 3-56 of RG-348.

City of Georgetown

South Lake to South Fork Wastewater Improvements

Water Pollution Abatement Plan

Vegetative filter strips (VFS) will serve as one of the primary permanent stormwater control for the site's long-term period. They will be installed after all construction activities have finished. The VFS will be inspected bi-weekly when installed to make sure vegetation has established, and if not, vegetation will be replanted. After establishment, the VFS should be checked after the first major storm event to make sure the VFS is functioning properly and that there is no standing water accumulated in the strip. Regular maintenance includes removing trash and debris that has accumulated along the strip and mowing the grass. This will be inspected bi-annually or as needed. The VFS will be inspected annually to make sure the strips are still functioning properly and that there is no sediment build up or signs of erosion. Excess sediment build-up will be removed as needed to maintain the efficiency of the VFS. If signs of erosion are present, the VFS might need to be re-vegetated or regraded. A log will be kept to document inspections, maintenance, and repairs of the VFS as needed.

Signature of Customer/Agent

_____

City of Georgetown

South Lake to South Fork Wastewater Improvements

Water Pollution Abatement Plan

There is a potential for stormwater from the proposed construction area to reach the Unnamed Creek and the Middle Fork of San Gabriel River after being treated by recommended control measures. Vegetated filter strips will act as the BMP for the site and will reduce TSS by more than 80%. All other areas will be hydroseeded and re-vegetated and will act as a linear vegetation strip in the long run that will provide erosion and sediment control. The project will add 17.31% impervious cover to the Cedar Breaks Lift Station site and 17.86% impervious cover to the D B Wood Lift Station site. The permanent BMP described will provide sufficient reduction in erosion, runoff velocities, and TSS loading to surface streams.

Agent Authorization Form
For Required Signature
Edwards Aquifer Protection Program
Relating to 30 TAC Chapter 213
Effective June 1, 1999

I Chris Pousson,
Print Name

Project Manager,
Title - Owner/President/Other

of City of Georgetown,
Corporation/Partnership/Entity Name

have authorized Gerald S. Furrier
Print Name of Agent/Engineer

of CDM Smith, Inc.
Print Name of Firm

to represent and act on the behalf of the above named Corporation, Partnership, or Entity for the purpose of preparing and submitting this plan application to the Texas Commission on Environmental Quality (TCEQ) for the review and approval consideration of regulated activities.

I also understand that:

1. The applicant is responsible for compliance with 30 Texas Administrative Code Chapter 213 and any condition of the TCEQ's approval letter. The TCEQ is authorized to assess administrative penalties of up to $10,000 per day per violation.

2. For those submitting an application who are not the property owner, but who have the right to control and possess the property, additional authorization is required from the owner.

3. Application fees are due and payable at the time the application is submitted. The application fee must be sent to the TCEQ cashier or to the appropriate regional office. The application will not be considered until the correct fee is received by the commission.

4. A notarized copy of the Agent Authorization Form must be provided for the person preparing the application, and this form must accompany the completed application.

5. No person shall commence any regulated activity on the Edwards Aquifer Recharge Zone, Contributing Zone or Transition Zone until the appropriate application for the activity has been filed with and approved by the Executive Director.

SIGNATURE PAGE:

Applicant's Signature

6-13-24
Date

THE STATE OF TEXAS §

County of WILLIAMSON §

BEFORE ME, the undersigned authority, on this day personally appeared CHRIS POUSSON known to me to be the person whose name is subscribed to the foregoing instrument, and acknowledged to me that (s)he executed same for the purpose and consideration therein expressed.

GIVEN under my hand and seal of office on this 14th day of JUNE, 2024

NOTARY PUBLIC

SHEILA K. MITCHELL
Typed or Printed Name of Notary

SHEILA KAYE MITCHELL
Notary Public, State of Texas
Comm. Expires 11-10-2025
Notary ID 133441435

MY COMMISSION EXPIRES: NOV. 10, 2025

Easement/Possession and Use Agreement

Cedar Breaks and D B Wood Lift Station
Georgetown, TX

POSSESSION AND USE AGREEMENT FOR UTILITY PURPOSES

STATE OF TEXAS	§	Project: South Lake Water Treatment Plant To South Fork Wastewater Interceptor
	§	Parcel Nos.: D B Wood Rd and Cedar Breaks Rd Lift Station Sites
COUNTY OF WILLIAMSON	§	

This Possession and Use Agreement for Utility Purposes (this "Agreement"), effective the ____ day of _____, 2024 (the "Effective Date"), between the City of Georgetown, Texas, (the "City"), Jamie Avant Deyhle, acting by Jim Forrest Avant, attorney-in-fact; Jim Forrest Avant; and Wood Avant Investments Ltd, a Texas limited partnership, whose address is 1800 Bering Drive, Suite 310, Houston, Texas 77057, as owners of the undivided interest in the Property (collectively, the "Grantor(s)" whether one or more), grants the irrevocable right to possession and use to the City, its contractors, agents and all others deemed necessary by the City for the purpose of constructing two (2) wastewater lift station sites on Grantors' property as part of the "South Lake Water Treatment Plant to the South Fork Wastewater Interceptor Project" (the "Construction Project"). The property involved for the wastewater lift station sites is described more fully in field notes and plat maps (attached as Exhibit "A") and made a part of this Agreement by reference (the "Property"), being legally described as:

AS MORE PARTICULARLY DESCRIBED BY METES AND BOUNDS IN EXHIBIT "A" ATTACHED HERETO AND BY THIS REFERENCE INCORPORATED HEREIN.

1. For the consideration paid by the City, which is set forth in Paragraph two below, the receipt and sufficiency of which is acknowledged, Grantor(s) grant, bargain, sell and convey to the City the right of entry and exclusive possession and use of the Property for the purpose of constructing two (2) wastewater lift stations and appurtenances thereto and the right to remove any improvements, if any, as well as temporary possession and use of the areas described and depicted in Exhibit A attached hereto as "Temporary Construction Easements," for the duration of the Construction Project. Authorized activities include surveying, inspection, environmental studies, archeological studies, clearing, demolition, construction of permanent improvements, relocating, replacing and improving existing utility facilities, locating new utility facilities, and other work required to be performed in connection with the Construction Project. This Agreement will extend to the City, its contractors and assigns, owners of any existing utilities on the Property and those which may be lawfully permitted on the Property by the City in the future.

2. In full consideration for this irrevocable grant of possession and use subject to the terms hereof, the City will tender to the Grantor(s) the sum of Ten dollars and no cents ($10.00). The Grantor(s) agree that this sum represents adequate and full compensation for the

possession and use of the Property. The City will be entitled to take possession and use of the Property upon tender of payment. If the City determines that it is necessary to use its power of eminent domain to acquire the Property, the parties agree that this sum will be deducted from any final settlement amount, award or verdict, if any. In the event the amount of the award or verdict for fee title, if any, is less than the amount the City has paid for the possession and use of the Property, then the Grantor(s) agree that the original amount tendered represents an overpayment and the City is entitled to seek a refund. In the event the award of the Special Commissioners is greater than the approved value, the difference will be deposited in the registry of the Court within 60 days from the date the Special Commissioners render their Award. In the event any settlement or final judgment exceeds the amount paid pursuant to this right of entry or pursuant to an award of the Special Commissioners, the City shall pay said funds to Grantor(s) by direct payment or deposit in the registry of the Court within 60 days of such settlement or final judgment.

3. The Grantor(s) warrant and represent by, through and under the Grantor(s), but not otherwise, that, as of the Effective Date, title to the Property is free and clear of all liens and encumbrances, other than those of record, and that proper releases will be executed for the Property prior to funds being disbursed under this Agreement. The Grantor(s) further warrant that no other person or corporation owns an interest in the fee title to the Property. Grantor(s) further agree to indemnify the City from all unreleased or undisclosed liens, claims or encumbrances affecting the Property. The above warranties are made by Grantor and accepted by the City subject to the following:

   A. Visible and apparent easements not appearing of record.

   B. Any discrepancies, conflicts, or shortages in area or boundary lines or any encroachments or any overlapping of improvements which a current survey would show.

   C. Easements, restrictions, reservations, covenants, conditions, oil and gas leases, mineral severances, and encumbrances for taxes and assessments (other than liens and conveyances) presently of record in the Official Public Records of Williamson County, Texas, that affect the Property, but only to the extent that said items are still valid and in force and effect at this time.

4. This Agreement is made with the understanding that the City will attempt to negotiate in good faith with the Grantors to acquire the fee simple interest of the Property by direct purchase or donation. However, Grantors acknowledge that the City intends to file a Petition for Condemnation if negotiations fail, and the Special Commissioners' Hearing will be set within One Hundred-Twenty (120) days of the filing of the Petition for Condemnation.

5. The parties agree that the valuation date for determining the amount of just compensation for the Property, for eminent domain proceeding purposes, will be the date this Agreement is fully executed.

6. This grant will not prejudice Grantors' rights to receive full and just compensation for the Property interest to be acquired by the City as part of its Construction Project, as improved with the improvements thereon, if any, and damages, if any, to the remainder of Grantors'

lands, save and except all oil, gas and sulphur, as the Property exists on the Effective Date of this Agreement. This grant will not prejudice the Grantors' rights to any relocation benefits for which Grantors may be eligible.

7. In the event the City continues with the eminent domain proceedings, the City will not be liable to Grantor(s) for interest upon any award or judgment as a result of such proceedings for the amount paid to Grantor(s) under this Agreement for any period of time prior to the valuation date. Payment of any additional interest owed may be deferred by the City until entry of judgment.

8. The purpose of this Agreement is to allow the City to proceed with its Construction Project without delay. The Grantor(s) expressly acknowledges that, to Grantors' knowledge (without any duty of investigation or inquiry), the proposed Construction Project is for a valid public use.

9. Grantor(s) reserve all of the oil, gas and sulphur in and under the land herein conveyed but waive all right of ingress and egress to the surface for the purpose of exploring, developing, mining or drilling. Nothing in this reservation will affect the title and rights of the City to take and use all other minerals and materials thereon, and thereunder. The extraction of oil, gas and minerals may not affect the geological stability of the surface.

10. The undersigned Grantor(s) agree to pay all ad valorem taxes, as they become due, including prorated taxes for the current year, and special assessments due at the time the City takes possession of the Property. Prorations, if any, shall be made through the date when the City of Georgetown takes possession of the Property.

11. Notwithstanding the acquisition of right of possession to the Property by the City in a condemnation proceeding by depositing the Special Commissioners' award into the registry of the court, less any amounts tendered to the Grantor(s) pursuant to Paragraph 2 above, this Agreement shall continue to remain in effect until the City acquires title to the Property either by negotiation, settlement, or final court judgment.

12. This Agreement will also extend to and bind the heirs, devisees, executors, administrators, legal representatives, successors and assigns of the parties.

13. It is agreed the City will record this document.

Signature Pages Follow.

IN WITNESS WHEREOF, THIS INSTRUMENT IS EXECUTED ON THIS THE ___DAY OF _____, 2024.

GRANTOR:

Jamie Avant Deyhle

Jim F Avant as Agent & Attorney-in-Fact

Jim Forrest Avant, attorney-in-fact

Date: 2-12-24

Jim Forrest Avant

Jim Forrest Avant

Date: 2-12-24

Wood Avant Investments Ltd,
a Texas limited partnership

By: Wood Avant Investments GP LLC,
a Texas limited liability company
Its: General Partner

By: Jim F Avant
Jim Forrest Avant, Vice President

Date: 2-12-24

Acknowledgment

State of Texas
County of HARRIS

This instrument was acknowledged before me on the 12th day of February, 2024, by Jim Forrest Avant as attorney-in-fact on behalf of Jamie Avant Deyhle.

MICHELLE R MCKAY
6876829
NOTARY PUBLIC, STATE OF TEXAS
MY COMMISSION EXPIRES
JUNE 14, 2024

Michelle R McKay
Notary Public, State of Texas

Acknowledgment

State of Texas
County of HARRIS

This instrument was acknowledged before me on the 12th day of February, 2024, by Jim Forrest Avant.

MICHELLE R MCKAY
6876829
NOTARY PUBLIC, STATE OF TEXAS
MY COMMISSION EXPIRES
JUNE 14, 2024

Michelle R McKay
Notary Public, State of Texas

Acknowledgment

State of Texas
County of HARRIS

This instrument was acknowledged before me on the 12th day of February, 2024, by Jim Forrest Avant, as the Vice President of Wood Avant Investments GP LLC, a Texas limited liability company, on behalf of said limited liability company, in its capacity as the General Partner of Wood Avant Investments Ltd, a Texas limited partnership, on behalf of said limited partnership.

MICHELLE R MCKAY
6876829
NOTARY PUBLIC, STATE OF TEXAS
MY COMMISSION EXPIRES
JUNE 14, 2024

Michelle R McKay

Notary Public, State of Texas

THE CITY OF GEORGETOWN, TEXAS

Executed by and approved for the purpose and effect of activating and/or carrying out the orders, established policies or work programs heretofore approved and authorized by the City Council.

By: _____

Title: City Manager

Date: 2/21/24

Corporate Acknowledgment

State of Texas
County of Williamson

This instrument was acknowledged before me on the 21st day of February, 2024, by David Morgan, City Manager of and on behalf of the City of Georgetown, Texas.

Shannon Biddle
My Commission Expires
9/26/2026
Notary ID 133982902

Notary Public, State of Texas

DESCRIPTION

DESCRIPTION OF A 0.5191 ACRE (22,612 SQ FT) TRACT OF LAND, LOCATED IN THE JOSEPH FISH SURVEY, ABSTRACT NO. 232, WILLIAMSON COUNTY, TEXAS, BEING A PORTION OF THAT CERTAIN CALLED 2055.12 ACRE TRACT OF LAND, SAVE AND EXCEPT A CALLED 15 ACRE TRACT, A CALLED 30 ACRE TRACT, A CALLED 90 ACRE TRACT, AND A CALLED 18.522 ACRE TRACT DESCRIBED AS "TRACT I" IN A SPECIAL WARRANTY DEED TO WOOD AVANT INVESTMENTS, LTD OF RECORD IN DOCUMENT NO. 2020167463, OF THE OFFICIAL PUBLIC RECORDS OF WILLIAMSON COUNTY, TEXAS, SAID 0.5191 ACRE (22,612 SQ FT) TRACT OF LAND BEING SURVEYED ON THE GROUND IN FEBRUARY THROUGH OCTOBER 2023, UNDER THE DIRECT SUPERVISION OF MIGUEL A. ESCOBAR, LSLS, RPLS, AND BEING MORE PARTICULARLY DESCRIBED BY METES AND BOUNDS AS FOLLOWS:

COMMENCING at a cotton gin spindle with washer stamped "STEGER BIZZELL" found in the south right-of-way line of Cedar Breaks Road, a called 10.21 acre right-of-way, described as "Exhibit A" in a Contract of Sale to Williamson County of record in Vol. 901, Page 551, of the Deed Records of Williamson County, Texas, same line being the north boundary line of said Tract I, for the northwest corner of a called 15.00 acre tract of land described in a Special Warranty Donation Deed with Use Restriction to Georgetown Independent School District of record in Document No. 2019122376, said Official Public Records; from which point, a 1/2-inch iron rod with cap stamped "STEGER BIZZELL" found for the southwest corner of said 15.00 acre tract bears South 09°49'49" West, a distance of 816.51 feet;

THENCE, with said common line of Cedar Breaks Road and Tract I, the following two (2) courses and distances:

1. North 80°03'37" West, a distance of 414.64 feet, to a calculated point at the beginning of a non-tangent curve to the right;
2. With said curve to the right, having a delta angle of 06°58'29", a radius of 1492.69 feet, an arc length of 181.71 feet, and a chord which bears North 76°35'10" West, for a chord distance of 181.60 feet, to a 1/2-inch iron rod with cap stamped "INLAND GEODETICS" set for the northeast corner and **POINT OF BEGINNING** of the herein described tract;

THENCE, leaving the south right-of-way line of Cedar Breaks Road, and over and across said Tract I, the following three (4) courses and distances:

(1) **South 24°29'26" West**, a distance of **85.39 feet**, to a 1/2-inch iron rod with cap stamped "INLAND GEODETICS" set in the east boundary line of the herein described tract;

(2) **Continuing South 24°29'26" West**, a distance of **68.08 feet**, to a 1/2-inch iron rod with cap stamped "INLAND GEODETICS" set for the southeast corner of the herein described tract;

(3) **North 65°30'34" West**, a distance of **155.00 feet**, to a 1/2-inch iron rod with cap stamped "INLAND GEODETICS" set for the southwest corner of the herein described tract;

(4) **North 24°29'26" East**, a distance of **141.00 feet**, to a 1/2-inch iron rod with cap stamped "INLAND GEODETICS" set in said common line of Cedar Breaks Road and Tract I, for the northwest corner of

the herein described tract; from which point, a 1/2-inch iron rod found in said common line along a non-tangent curve to the right having a delta angle of 06°58'49", a radius of 1492.69 feet, an arc length of 181.85 feet, and a chord which bears North 63°38'14" West, for a chord distance of 181.74 feet;

(5) **THENCE**, with said common line of Cedar Breaks Road and Tract I, and a curve to the left, having a delta angle of 05°58'17", a **radius of 1492.69 feet**, an arc length of 155.57 feet, and a chord which bears **South 70°06'47" East**, for a chord distance of **155.50 feet**, to the **POINT OF BEGINNING** and containing 0.5191 acres (22,612 sq.ft.) of land, more or less, within these metes and bounds.

Together with a variable width (0.6182 acres, 28,927 Sq.Ft.) Temporary Construction Easement being adjacent to, parallel with the following courses:

a) 10 feet easterly of course 1,
b) 30 feet easterly of course 2,
c) 35 feet southerly of course 3, and
d) 100 feet westerly of course 4,

as shown on the attached survey map of the subject tract.

Bearings are based on the Texas Coordinate System of 1983, Central Zone, (NAD 83(2011)). All distances are surface values represented in US Survey Feet based on a Surface-to-Grid Combined Adjustment Factor of 0.9998673234.

The foregoing metes and bounds description, and survey on which it was based, is accompanied by and a part of a survey map of the subject tract.

That I, Miguel A. Escobar, a Registered Professional Land Surveyor, do hereby certify that the above description and the accompanying sketch is true and correct to the best of my knowledge and belief and the property described herein was determined by a survey made on the ground during the months of February through October, 2023, under my direct supervision.

WITNESS MY HAND AND SEAL at Round Rock, Williamson County, Texas on this 26th of January, 2024, A.D.

INLAND GEODETICS

STATE OF TEXAS
REGISTERED
MIGUEL ANGEL ESCOBAR
5630
PROFESSIONAL
LAND SURVEYOR

Miguel A. Escobar, L.S.L.S., R.P.L.S.
Texas Reg. No. 5630
1504 Chisholm Trail Rd #103
Round Rock, TX 78681
TBPELS Firm No. 10059100

P:\Projects\CDM Smith (CDMS)\CDMS-003 - S. Lake WTP To SF Interceptor WW Syst Expansion\5-Descriptions-Reports\LS TITLE\CDMS-003-DESCRIPTION-CEDAR BERAKS LS.docx

EXHIBIT _____

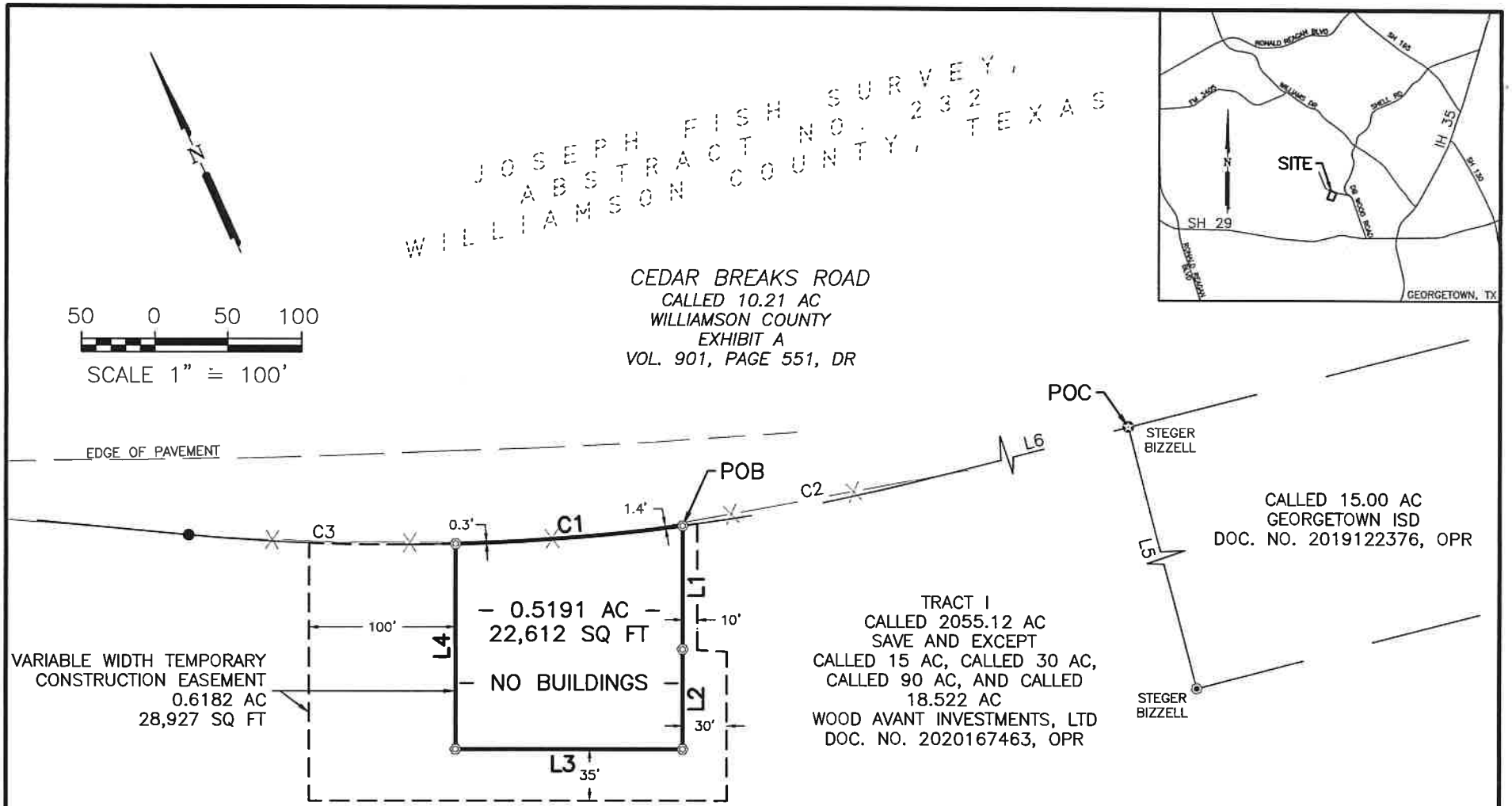

LINE	BEARING	DISTANCE
L1	S 24°29'26" W	85.39'
L2	S 24°29'26" W	68.08'
L3	N 65°30'34" W	155.00'
L4	N 24°29'26" E	141.00'
L5	S 09°49'49" W	816.51'
L6	N 80°03'37" W	414.64'

CURVE	RADIUS	ARC LENGTH	CHORD LENGTH	CHORD BEARING	DELTA ANGLE
C1	1492.69'	155.57'	155.50'	S 70°06'47" E	5°58'17"
C2	1492.69'	181.71'	181.60'	N 76°35'10" W	6°58'29"
C3	1492.69'	181.85'	181.74'	N 63°38'14" W	6°58'49"

SURVEY OF
0.5191 AC OF LAND
SHOWING PROPERTY OF
WOOD AVANT
INVESTMENTS, LTD
JOSEPH FISH SURVEY
ABSTRACT NO. 232
WILLIAMSON COUNTY

INLAND GEODETICS
Land Surveyors
1504 CHISHOLM TRAIL RD., #103
ROUND ROCK, TX 78681
512-238-1200
FIRM REG. NO. 100591-00

SHEET 3 OF 4

CDMS-003 1/26/2024

P:\PROJECTS\CDM SMITH (CDMS)\CDMS-003 - S. LAKE WTP TO SF INTERCEPTOR WW SYST EXPANSION\1-DRAWINGS\LS TITLE\CEDAR BREAKS LS\CDMS-003-TITLE-CEDAR BREAKS LS.DWG

BB

EXHIBIT _____

NOTES:

1. BEARINGS ARE BASED ON THE TEXAS COORDINATE SYSTEM OF 1983, CENTRAL ZONE (NAD_83 (2011)). ALL DISTANCES SHOWN HEREON ARE SURFACE VALUES REPRESENTED IN U.S. SURVEY FEET BASED ON A SURFACE-TO-GRID COMBINED ADJUSTMENT FACTOR OF 0.9998673234.

2. THIS SURVEY WAS MADE WITHOUT THE BENEFIT OF AN ABSTRACT OF TITLE NOR A TITLE COMMITMENT OR TITLE POLICY. THERE MAY BE ADDITIONAL EASEMENTS OR RESTRICTIONS, NOT SHOWN HEREON, WHICH MAY AFFECT THE PROPERTY.

3. THE SYMBOLS REFLECTED IN THE LEGEND AND ON THIS SURVEY MAY HAVE BEEN ENLARGED FOR CLARITY. THE SYMBOLS HAVE BEEN PLOTTED AT THE CENTER OF THE FIELD LOCATION AND MAY NOT REPRESENT THE ACTUAL SIZE OR SHAPE OF THE FEATURE.

4. UTILITY INFORMATION SHOWN HEREON CONSTITUTES FIELD RECOVERY OF OBSERVED EVIDENCE OF UTILITIES. LOCATIONS OF UNDERGROUND UTILITIES/STRUCTURES MAY VARY FROM LOCATIONS SHOWN HEREON. ADDITIONAL BURIED UTILITIES/STRUCTURES, SUCH AS ELECTRICAL, TELEPHONE, CABLE TV AND PIPELINES, MAY BE ENCOUNTERED. NO EXCAVATIONS WERE MADE DURING THE PROGRESS OF THIS SURVEY TO LOCATE BURIED UTILITIES/STRUCTURES. FOR INFORMATION REGARDING BURIED UTILITIES/STRUCTURES OR BEFORE ANY EXCAVATION IS BEGUN, CONTACT THE APPROPRIATE AGENCIES FOR VERIFICATION OF UTILITY TYPE AND FOR FIELD LOCATION.

5. BY GRAPHIC PLOTTING ONLY, THIS PROPERTY IS IN ZONE X (NOT SHADED) – AREAS DETERMINED TO BE OUTSIDE THE 0.2% ANNUAL CHANCE FLOODPLAIN AS DEFINED BY THE FEDERAL EMERGENCY MANAGEMENT AGENCY, FLOOD INSURANCE RATE MAP, COMMUNITY PANEL NO. 48491C0290E, THAT BEARS AN EFFECTIVE/REVISED DATE OF 9/26/2008. THE SURVEYOR MAKES NO ASSURANCE AS TO THE ACCURACY OF THE DELINEATIONS SHOWN ON THE FEDERAL EMERGENCY MANAGEMENT AGENCY FLOOD INSURANCE RATE MAP. THIS STATEMENT IS FOR INSURANCE PURPOSES ONLY AND IS NOT AN OPINION THAT THE PROPERTY WILL OR WILL NOT FLOOD. A FLOOD STUDY WAS NOT CONDUCTED ON THE PROPERTY.

6. THE USE OF THE WORD CERTIFY OR CERTIFICATION ON THIS DOCUMENT ONLY CONSTITUTES AN EXPRESSION OF PROFESSIONAL OPINION REGARDING THOSE FACTS OR FINDINGS WHICH ARE THE SUBJECT OF THE CERTIFICATION, AND DOES NOT CONSTITUTE A WARRANTY OR GUARANTEE, EITHER EXPRESSED OR IMPLIED.

7. THE FOREGOING MAP AND SURVEY ON WHICH IT IS BASED IS ACCOMPANIED BY AND A PART OF SEPARATE METES AND BOUND DESCRIPTION OF THE SUBJECT TRACT.

THIS IS TO CERTIFY THAT THIS SURVEY WAS MADE ON THE GROUND IN FEBRUARY THROUGH OCTOBER, 2023, BY ME OR UNDER MY SUPERVISION, THAT THIS SURVEY PLAT REPRESENTS THE FACTS FOUND AT THE TIME OF THE SURVEY.

INLAND GEODETICS

MIGUEL A. ESCOBAR, L.S.L.S., R.P.L.S.
TEXAS REG. NO. 5630

STATE OF TEXAS
REGISTERED
MIGUEL ANGEL ESCOBAR
5630
PROFESSIONAL
LAND SURVEYOR

LEGEND

●	IRON ROD FOUND 1/2" IN DIAMETER OR OTHERWISE NOTED
◎	1/2" IRON ROD SET WITH CAP STAMED "INLAND GEODETICS"
R.O.W.	RIGHT OF WAY
POB	POINT OF BEGINNING
POC	POINT OF COMMENCING
DR	DEED RECORDS OF WILLIAMSON COUNTY, TEXAS
OPR	OFFICIAL PUBLIC RECORDS OF WILLIAMSON COUNTY, TEXAS
——X——	WIRE FENCE

SURVEY OF
0.5191 AC OF LAND
SHOWING PROPERTY OF
WOOD AVANT
INVESTMENTS, LTD
JOSEPH FISH SURVEY
ABSTRACT NO. 232
WILLIAMSON COUNTY

INLAND GEODETICS
Land Surveyors

1504 CHISHOLM TRAIL RD., #103
ROUND ROCK, TX 78681
512-238-1200
FIRM REG. NO. 100591-00

SHEET 4 OF 4

CDMS-003 1/26/2024

BB P:\PROJECTS\CDM SMITH (CDMS)\CDMS-003 - S. LAKE WTP TO SF INTERCEPTOR WW SYST EXPANSION\4-DRAWINGS\LS TITLE\CEDAR BREAKS LS\CDMS-003-TITLE-CEDAR BREAKS LS.DWG

DESCRIPTION

DESCRIPTION OF A 1.686 ACRE (73,459 SQ FT) TRACT OF LAND, LOCATED IN THE ISAAC DONAGAN SURVEY, ABSTRACT NO. 178 WILLIAMSON COUNTY, TEXAS, BEING A PORTION OF THAT CERTAIN CALLED 2055.12 ACRE TRACT OF LAND, SAVE AND EXCEPT A CALLED 15 ACRE TRACT, A CALLED 30 ACRE TRACT, A CALLED 90 ACRE TRACT, AND A CALLED 18.522 ACRE TRACT DESCRIBED AS "TRACT I" IN A SPECIAL WARRANTY DEED TO WOOD AVANT INVESTMENTS, LTD OF RECORD IN DOCUMENT NO. 2020167463, OF THE OFFICIAL PUBLIC RECORDS OF WILLIAMSON COUNTY, TEXAS, SAID 1.686 ACRE (73,459 SQ FT) TRACT OF LAND BEING SURVEYED ON THE GROUND IN FEBRUARY THROUGH OCTOBER 2023, UNDER THE DIRECT SUPERVISION OF MIGUEL A. ESCOBAR, LSLS, RPLS, AND BEING MORE PARTICULARLY DESCRIBED BY METES AND BOUNDS AS FOLLOWS:

COMMENCING at a 1/2-inch iron rod with cap stamped "STEGER BIZZELL" found in the west right-of-way line of D.B. Wood Road, a called 6.91 acre right-of-way described in a Contract of Sale to Williamson County, Texas of record in Volume 901, Page 551, of the Deed Records of Williamson County, Texas, for the southeast corner of a called 90.00 acre tract of land described in a Special Warranty Deed with Use Restriction to Georgetown Independent School District of record in Document No. 2019122375, of said Official Public Records; from which point, a mag nail with washer stamped "STEGER BIZZELL" found for the southwest corner of said 90.00 acre tract bears South 69°34'34" East, a distance of 1018.53 feet;

THENCE, South 20°25'32" East, with said west right-of-way line of D.B. Wood Road, same line being the east boundary line of said Tract I, a distance of 825.81 feet, to a calculated point for the northeast corner and POINT OF BEGINNING of the herein described tract;

(1) THENCE, South 20°25'32" East, with said common line of D.B. Wood Road and Tract I, a distance of **341.88 feet**, to a 1/2-inch iron rod with cap stamped "INLAND GEODETICS" set for the southeast corner of the herein described tract;

THENCE, over and across the interior of said Tract I, the following seven (7) courses and distances:

(2) South 37°25'56" West, a distance of **97.76 feet**, to a 1/2-inch iron rod with cap stamped "INLAND GEODETICS" set for a south corner of the herein described tract;

(3) South 68°08'36" West, a distance of **124.97 feet**, to a 1/2-inch iron rod with cap stamped "INLAND GEODETICS" set for the southwest corner of the herein described tract;

(4) North 22°25'16" West, a distance of **35.00 feet**, to a 1/2-inch iron rod with cap stamped "INLAND GEODETICS" set on the western boundary line of the herein described tract;

(5) North 22°25'16" West, a distance of **212.26 feet**, to a 1/2-inch iron rod with cap stamped "INLAND GEODETICS" set for an exterior ell corner of the herein described tract;

(6) **North 68°08'40" East**, a distance of **57.72 feet**, to a 1/2-inch iron rod with cap stamped "INLAND GEODETICS" set for an interior ell corner of the herein described tract;

(7) **North 21°21'40" West**, a distance of **144.46 feet**, to a 1/2-inch iron rod with cap stamped "INLAND GEODETICS" set for the northwest corner of the herein described tract;

(8) **North 68°08'40" East**, a distance of **161.02 feet**, to the **POINT OF BEGINNING** and containing 1.686 acres (73,459 SQ FT) of land, more or less, within these metes and bounds.

Bearings are based on the Texas Coordinate System of 1983, Central Zone, (NAD 83(2011)). All distances are surface values represented in US Survey Feet based on a Surface-to-Grid Combined Adjustment Factor of 0.9998673234.

Together with a variable width (0.9631 acres, 41,954 Sq.Ft.) Temporary Construction Easement being adjacent to, parallel with the following courses:

a) 85 feet westerly of course 5,
b) 145 feet westerly of course 7, and
c) 10 feet northerly of course 8,

as shown on the attached survey map of the subject tract.

The foregoing metes and bounds description, and survey on which it was based, is accompanied by and a part of a survey map of the subject tract.

That I, Miguel A. Escobar, a Registered Professional Land Surveyor, do hereby certify that the above description and the accompanying sketch is true and correct to the best of my knowledge and belief and the property described herein was determined by a survey made on the ground during the months of February through October, 2023, under my direct supervision.

WITNESS MY HAND AND SEAL at Round Rock, Williamson County, Texas on this 26th of January, 2024, A.D.

INLAND GEODETICS

STATE OF TEXAS
REGISTERED
MIGUEL ANGEL ESCOBAR
5630
PROFESSIONAL
LAND SURVEYOR

Miguel A. Escobar, L.S.L.S., R.P.L.S.
Texas Reg. No. 5630
1504 Chisholm Trail Rd #103
Round Rock, TX 78681
TBPELS Firm No. 10059100

P:\Projects\CDM Smith (CDMS)\CDMS-003 - S. Lake WTP To SF Interceptor WW Syst Expansion\5-Descriptions-Reports\DB WOOD LS\CDMS-003-Description-DB Wood LS.docx

EXHIBIT _____

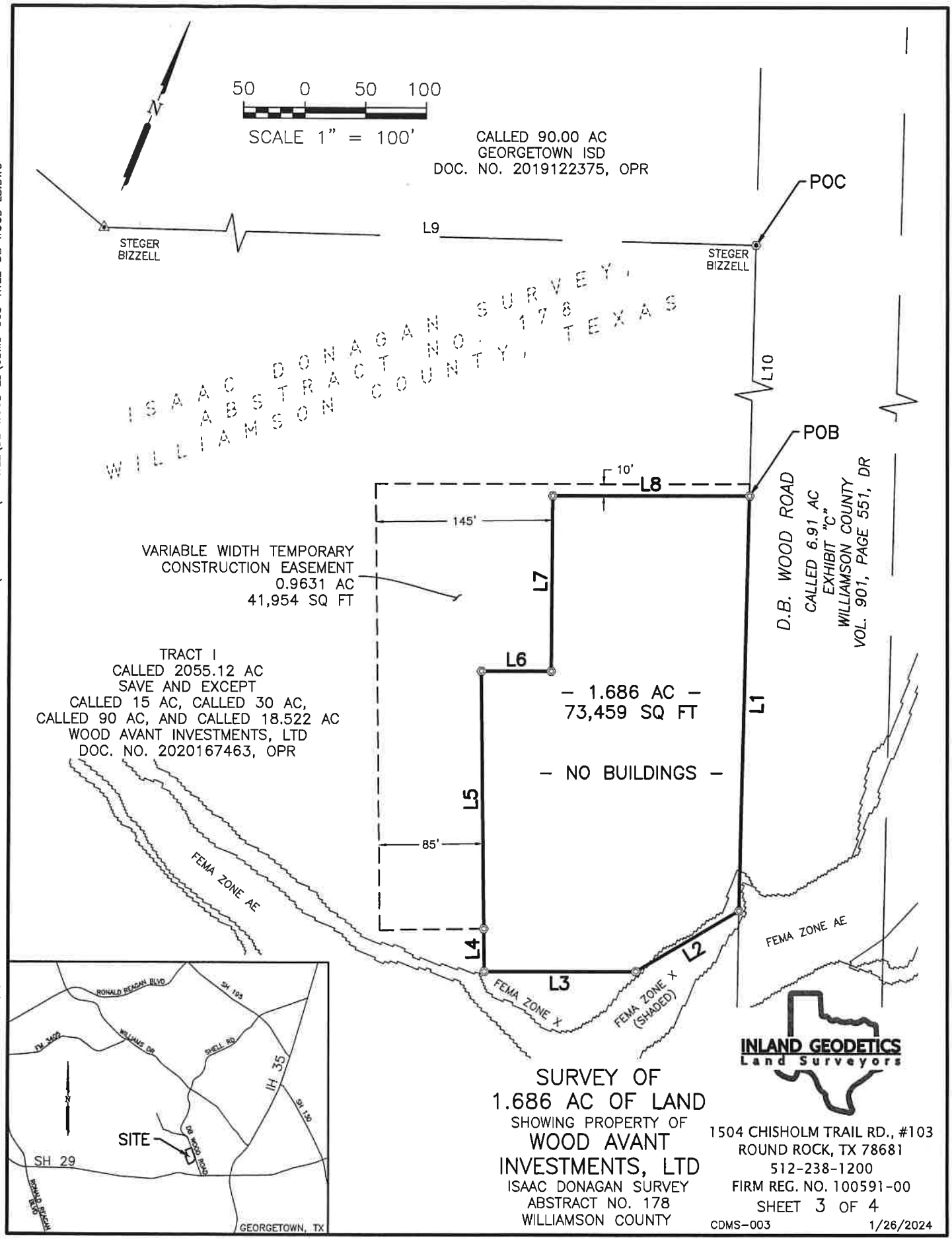

SURVEY OF
1.686 AC OF LAND
SHOWING PROPERTY OF
WOOD AVANT
INVESTMENTS, LTD
ISAAC DONAGAN SURVEY
ABSTRACT NO. 178
WILLIAMSON COUNTY

1504 CHISHOLM TRAIL RD., #103
ROUND ROCK, TX 78681
512-238-1200
FIRM REG. NO. 100591-00

SHEET 3 OF 4

CDMS-003 1/26/2024

BB P:\PROJECTS\CDM SMITH (CDMS)\CDMS-003 - S. LAKE WTP TO SF INTERCEPTOR WW SYST EXPANSION\4-DRAWINGS\LS TITLE\DB WOOD LS\CDMS-003-TITLE-DB WOOD LS.DWG

EXHIBIT _____

NOTES:

1. BEARINGS ARE BASED ON THE TEXAS COORDINATE SYSTEM OF 1983, CENTRAL ZONE (NAD_83 (2011)). ALL DISTANCES SHOWN HEREON ARE SURFACE VALUES REPRESENTED IN U.S. SURVEY FEET BASED ON A SURFACE-TO-GRID COMBINED ADJUSTMENT FACTOR OF 0.9998673234.

2. THIS SURVEY WAS MADE WITHOUT THE BENEFIT OF AN ABSTRACT OF TITLE NOR A TITLE COMMITMENT OR TITLE POLICY. THERE MAY BE ADDITIONAL EASEMENTS OR RESTRICTIONS, NOT SHOWN HEREON, WHICH MAY AFFECT THE PROPERTY.

3. THE SYMBOLS REFLECTED IN THE LEGEND AND ON THIS SURVEY MAY HAVE BEEN ENLARGED FOR CLARITY. THE SYMBOLS HAVE BEEN PLOTTED AT THE CENTER OF THE FIELD LOCATION AND MAY NOT REPRESENT THE ACTUAL SIZE OR SHAPE OF THE FEATURE.

4. UTILITY INFORMATION SHOWN HEREON CONSTITUTES FIELD RECOVERY OF OBSERVED EVIDENCE OF UTILITIES. LOCATIONS OF UNDERGROUND UTILITIES/STRUCTURES MAY VARY FROM LOCATIONS SHOWN HEREON. ADDITIONAL BURIED UTILITIES/STRUCTURES, SUCH AS ELECTRICAL, TELEPHONE, CABLE TV AND PIPELINES, MAY BE ENCOUNTERED. NO EXCAVATIONS WERE MADE DURING THE PROGRESS OF THIS SURVEY TO LOCATE BURIED UTILITIES/STRUCTURES. FOR INFORMATION REGARDING BURIED UTILITIES/STRUCTURES OR BEFORE ANY EXCAVATION IS BEGUN, CONTACT THE APPROPRIATE AGENCIES FOR VERIFICATION OF UTILITY TYPE AND FOR FIELD LOCATION.

5. BY GRAPHIC PLOTTING ONLY, THIS PROPERTY IS IN ZONE X (NOT SHADED) – AREAS DETERMINED TO BE OUTSIDE THE 0.2% ANNUAL CHANCE FLOODPLAIN AS DEFINED BY THE FEDERAL EMERGENCY MANAGEMENT AGENCY AND ZONE X (SHADED) – AREAS OF 0.2% ANNUAL CHANCE FLOOD; AREAS OF 1% ANNUAL CHANCE FLOOD WITH AVERAGE DEPTHS OF LESS THAN 1 FOOT OR WITH DRAINAGE AREAS LESS THAN 1 SQUARE MILE; AND AREAS PROTECTED BY LEVEES FROM 1% ANNUAL CHANCE FLOOD / SPECIAL FLOOD HAZARD ZONE A – NO BASE FLOOD ELEVATIONS DETERMINED, FLOOD INSURANCE RATE MAP, COMMUNITY PANEL NO. 48491C0290E, THAT BEARS AN EFFECTIVE/REVISED DATE OF 9/26/2008. THE SURVEYOR MAKES NO ASSURANCE AS TO THE ACCURACY OF THE DELINEATIONS SHOWN ON THE FEDERAL EMERGENCY MANAGEMENT AGENCY FLOOD INSURANCE RATE MAP. THIS STATEMENT IS FOR INSURANCE PURPOSES ONLY AND IS NOT AN OPINION THAT THE PROPERTY WILL OR WILL NOT FLOOD. A FLOOD STUDY WAS NOT CONDUCTED ON THE PROPERTY.

6. THE USE OF THE WORD CERTIFY OR CERTIFICATION ON THIS DOCUMENT ONLY CONSTITUTES AN EXPRESSION OF PROFESSIONAL OPINION REGARDING THOSE FACTS OR FINDINGS WHICH ARE THE SUBJECT OF THE CERTIFICATION, AND DOES NOT CONSTITUTE A WARRANTY OR GUARANTEE, EITHER EXPRESSED OR IMPLIED.

7. THE FOREGOING MAP AND SURVEY ON WHICH IT IS BASED IS ACCOMPANIED BY AND A PART OF SEPARATE METES AND BOUND DESCRIPTION OF THE SUBJECT TRACT.

LINE	BEARING	DISTANCE
L1	S 20°25'32" E	341.88'
L2	S 37°25'56" W	97.76'
L3	S 68°08'36" W	124.97'
L4	N 22°25'16" W	35.00'
L5	N 22°25'16" W	212.26'
L6	N 68°08'40" E	57.72'
L7	N 21°21'40" W	144.46'
L8	N 68°08'40" E	161.02'
L9	S 69°34'34" W	1018.53'
L10	S 20°25'32" E	825.81'

LEGEND

●	IRON ROD FOUND 1/2" IN DIAMETER OR OTHERWISE NOTED
◉	IRON ROD FOUND 1/2" IN DIAMETER W/CAP STAMP NOTED
◎	IRON ROD SET 1/2" STAMPED "INLAND GEODETICS"
R.O.W.	RIGHT OF WAY
POB	POINT OF BEGINNING
POC	POINT OF COMMENCING
DR	DEED RECORDS OF WILLIAMSON COUNTY, TEXAS
OPR	OFFICIAL PUBLIC RECORDS OF WILLIAMSON COUNTY, TEXAS

THIS IS TO CERTIFY THAT THIS SURVEY WAS MADE ON THE GROUND FEBRUARY THROUGH OCTOBER, 2023, BY ME OR UNDER MY SUPERVISION, THAT THIS SURVEY PLAT REPRESENTS THE FACTS FOUND AT THE TIME OF THE SURVEY.

INLAND GEODETICS

MIGUEL A. ESCOBAR, L.S.L.S., R.P.L.S.
TEXAS REG. NO. 5630

STATE OF TEXAS
REGISTERED
MIGUEL ANGEL ESCOBAR
5630
PROFESSIONAL
LAND SURVEYOR

SURVEY OF
1.686 AC OF LAND
SHOWING PROPERTY OF
WOOD AVANT
INVESTMENTS, LTD
ISAAC DONAGAN SURVEY
ABSTRACT NO. 178
WILLIAMSON COUNTY

INLAND GEODETICS
Land Surveyors

1504 CHISHOLM TRAIL RD., #103
ROUND ROCK, TX 78681
512-238-1200
FIRM REG. NO. 100591-00
SHEET 4 OF 4
CDMS-003 1/26/2024

BB P:\PROJECTS\CDM SMITH (CDMS)\CDMS-003 - S. LAKE WTP TO SF INTERCEPTOR WW SYST EXPANSION\4-DRAWINGS\LS TITLE\DB WOOD LS\CDMS-003-TITLE-DB WOOD LS.DWG

Application Fee Form

Texas Commission on Environmental Quality

Name of Proposed Regulated Entity: South Lake to South Fork Wastewater Improvements

Regulated Entity Location: The Cedar Break Lift Station is approximately 2200 ft west of intersection of Cedar Breaks Road and D B Wood Road. The D B Wood Lift Station is approximately 1650 ft south of the intersection of D B Wood Road and Oak Ridge Rd.

Name of Customer: City of Georgetown

Contact Person: Chris Pousson Phone: (512) 930-8162

Customer Reference Number (if issued):CN 600412043

Regulated Entity Reference Number (if issued):RN _____

Austin Regional Office (3373)

☐ Hays ☐ Travis ☒ Williamson

San Antonio Regional Office (3362)

☐ Bexar ☐ Medina ☐ Uvalde

☐ Comal ☐ Kinney

Application fees must be paid by check, certified check, or money order, payable to the **Texas Commission on Environmental Quality**. Your canceled check will serve as your receipt. **This form must be submitted with your fee payment**. This payment is being submitted to:

☒ Austin Regional Office

☐ Mailed to: TCEQ - Cashier
Revenues Section
Mail Code 214
P.O. Box 13088
Austin, TX 78711-3088

☐ San Antonio Regional Office

☐ Overnight Delivery to: TCEQ - Cashier
12100 Park 35 Circle
Building A, 3rd Floor
Austin, TX 78753
(512)239-0357

Site Location (Check All That Apply):

☒ Recharge Zone ☐ Contributing Zone ☐ Transition Zone

Type of Plan	*Size*	*Fee Due*
Water Pollution Abatement Plan, Contributing Zone Plan: One Single Family Residential Dwelling	Acres	$
Water Pollution Abatement Plan, Contributing Zone Plan: Multiple Single Family Residential and Parks	Acres	$
Water Pollution Abatement Plan, Contributing Zone Plan: Non-residential	2.2 Acres	$ 4,000
Sewage Collection System	L.F.	$
Lift Stations without sewer lines	Acres	$
Underground or Aboveground Storage Tank Facility	Tanks	$
Piping System(s)(only)	Each	$
Exception	Each	$
Extension of Time	Each	$

Signature: _____ Date: 06/13/24

Application Fee Schedule

Texas Commission on Environmental Quality

Edwards Aquifer Protection Program 30 TAC Chapter 213 (effective 05/01/2008)

Water Pollution Abatement Plans and Modifications

Contributing Zone Plans and Modifications

Project	*Project Area in Acres*	*Fee*
One Single Family Residential Dwelling	< 5	$650
Multiple Single Family Residential and Parks	< 5 5 < 10 10 < 40 40 < 100 100 < 500 ≥ 500	$1,500 $3,000 $4,000 $6,500 $8,000 $10,000
Non-residential (Commercial, industrial, institutional, multi-family residential, schools, and other sites where regulated activities will occur)	< 1 1 < 5 5 < 10 10 < 40 40 < 100 ≥ 100	$3,000 $4,000 $5,000 $6,500 $8,000 $10,000

Organized Sewage Collection Systems and Modifications

Project	*Cost per Linear Foot*	*Minimum Fee-Maximum Fee*
Sewage Collection Systems	$0.50	$650 - $6,500

Underground and Aboveground Storage Tank System Facility Plans and Modifications

Project	*Cost per Tank or Piping System*	*Minimum Fee-Maximum Fee*
Underground and Aboveground Storage Tank Facility	$650	$650 - $6,500

Exception Requests

Project	*Fee*
Exception Request	$500

Extension of Time Requests

Project	***Fee***
Extension of Time Request	$150

TCEQ Core Data Form

Cedar Breaks Lift Station
Georgetown, TX

TCEQ Use Only

TCEQ Core Data Form

For detailed instructions on completing this form, please read the Core Data Form Instructions or call 512-239-5175.

SECTION I: General Information

1. Reason for Submission (*If other is checked please describe in space provided.*)

☒ New Permit, Registration or Authorization (*Core Data Form should be submitted with the program application.*)

☐ Renewal (*Core Data Form should be submitted with the renewal form*) ☐ Other

2. Customer Reference Number (*if issued*)	Follow this link to search for CN or RN numbers in Central Registry**	3. Regulated Entity Reference Number (*if issued*)
CN 600412043		RN

SECTION II: Customer Information

4. General Customer Information	5. Effective Date for Customer Information Updates (mm/dd/yyyy)	09/01/2024

☐ New Customer ☒ Update to Customer Information ☐ Change in Regulated Entity Ownership
☐ Change in Legal Name (Verifiable with the Texas Secretary of State or Texas Comptroller of Public Accounts)

The Customer Name submitted here may be updated automatically based on what is current and active with the Texas Secretary of State (SOS) or Texas Comptroller of Public Accounts (CPA).

6. Customer Legal Name (*If an individual, print last name first: eg: Doe, John*)	*If new Customer, enter previous Customer below:*
City of Georgetown	

7. TX SOS/CPA Filing Number	8. TX State Tax ID (11 digits)	9. Federal Tax ID (9 digits)	10. DUNS Number (*if applicable*)
		74-6000974	89592372

11. Type of Customer: ☐ Corporation ☐ Individual Partnership: ☐ General ☐ Limited

Government: ☒ City ☐ County ☐ Federal ☐ Local ☐ State ☐ Other ☐ Sole Proprietorship ☐ Other:

12. Number of Employees

☐ 0-20 ☐ 21-100 ☐ 101-250 ☐ 251-500 ☒ 501 and higher

13. Independently Owned and Operated?

☒ **Yes** ☐ **No**

14. Customer Role (Proposed or Actual) – *as it relates to the Regulated Entity listed on this form. Please check one of the following*

☒ Owner ☐ Operator ☐ Owner & Operator ☐ Other:
☐ Occupational Licensee ☐ Responsible Party ☐ VCP/BSA Applicant

15. Mailing Address:	300-1 Industrial Ave							
	City	Georgetown	**State**	TX	**ZIP**	78626	**ZIP + 4**	8445

16. Country Mailing Information (*if outside USA*)	17. E-Mail Address (*if applicable*)

18. Telephone Number	19. Extension or Code	20. Fax Number (*if applicable*)

(512) 930-3555		(512) 930-3559

SECTION III: Regulated Entity Information

21. General Regulated Entity Information *(If 'New Regulated Entity" is selected, a new permit application is also required.)*

☒ New Regulated Entity ☐ Update to Regulated Entity Name ☐ Update to Regulated Entity Information

The Regulated Entity Name submitted may be updated, in order to meet TCEQ Core Data Standards (removal of organizational endings such as Inc, LP, or LLC).

22. Regulated Entity Name *(Enter name of the site where the regulated action is taking place.)*

Cedar Breaks Lift Station

23. Street Address of the Regulated Entity: ***(No PO Boxes)***								
	City		**State**		**ZIP**		**ZIP + 4**	
24. County								

If no Street Address is provided, fields 25-28 are required.

25. Description to Physical Location:	The Cedar Breaks Lift Station is approximately 2200 ft west of intersection of Cedar Breaks Road and D B Wood Road.

26. Nearest City	**State**	**Nearest ZIP Code**
Georgetown	TX	78628

Latitude/Longitude are required and may be added/updated to meet TCEQ Core Data Standards. (Geocoding of the Physical Address may be used to supply coordinates where none have been provided or to gain accuracy).

27. Latitude (N) In Decimal:		30.65761957924814	**28. Longitude (W) In Decimal:**		-97.72976959201813
Degrees	Minutes	Seconds	Degrees	Minutes	Seconds
30	39	27.43	97	43	47.17

29. Primary SIC Code (4 digits)	**30. Secondary SIC Code** (4 digits)	**31. Primary NAICS Code** (5 or 6 digits)	**32. Secondary NAICS Code** (5 or 6 digits)
4952		221320	

33. What is the Primary Business of this entity? *(Do not repeat the SIC or NAICS description.)*

Lift Station

34. Mailing Address:	**300-1 Industrial Ave**							
	City	**Georgetown**	**State**	**TX**	**ZIP**	**78626**	**ZIP + 4**	**5446**

35. E-Mail Address:	**chris.pousson@georgetown.org**

36. Telephone Number	**37. Extension or Code**	**38. Fax Number** *(if applicable)*
(512) 930-8162		**( ) -**

39. TCEQ Programs and ID Numbers Check all Programs and write in the permits/registration numbers that will be affected by the updates submitted on this form. See the Core Data Form instructions for additional guidance.

☐ Dam Safety	☐ Districts	☒ Edwards Aquifer	☐ Emissions Inventory Air	☐ Industrial Hazardous Waste
☐ Municipal Solid Waste	☐ New Source Review Air	☐ OSSF	☐ Petroleum Storage Tank	☐ PWS
☐ Sludge	☐ Storm Water	☐ Title V Air	☐ Tires	☐ Used Oil
☐ Voluntary Cleanup	☒ Wastewater	☐ Wastewater Agriculture	☐ Water Rights	☐ Other:

SECTION IV: Preparer Information

40. Name:	Jenny Vu	**41. Title:**	Environmental Engineer
42. Telephone Number	**43. Ext./Code**	**44. Fax Number**	**45. E-Mail Address**
(713 **)** 423-7328		**( ) -**	vujt2@cdmsmith.com

SECTION V: Authorized Signature

46. By my signature below, I certify, to the best of my knowledge, that the information provided in this form is true and complete, and that I have signature authority to submit this form on behalf of the entity specified in Section II, Field 6 and/or as required for the updates to the ID numbers identified in field 39.

Company:	CDM Smith, Inc.	**Job Title:**	Project Manager
Name *(In Print):*	Gerald S. Furrier, P.E.	**Phone:**	**(** 713 **)** 423- **7337**
Signature:		**Date:**	06/13/24

TCEQ Core Data Form

D B Wood Lift Station
Georgetown, TX

TCEQ Use Only

TCEQ Core Data Form

For detailed instructions on completing this form, please read the Core Data Form Instructions or call 512-239-5175.

SECTION I: General Information

1. Reason for Submission (*If other is checked please describe in space provided.*)		
☒ New Permit, Registration or Authorization (*Core Data Form should be submitted with the program application.*)		
☐ Renewal (*Core Data Form should be submitted with the renewal form*)		☐ Other
2. Customer Reference Number (*if issued*)	Follow this link to search for CN or RN numbers in Central Registry**	**3. Regulated Entity Reference Number** (*if issued*)
CN 600412043		**RN**

SECTION II: Customer Information

4. General Customer Information	**5. Effective Date for Customer Information Updates** (mm/dd/yyyy)	9/1/2024
☐ New Customer ☒ Update to Customer Information ☐ Change in Regulated Entity Ownership ☐ Change in Legal Name (Verifiable with the Texas Secretary of State or Texas Comptroller of Public Accounts)		
The Customer Name submitted here may be updated automatically based on what is current and active with the Texas Secretary of State (SOS) or Texas Comptroller of Public Accounts (CPA).		
6. Customer Legal Name (*If an individual, print last name first: eg: Doe, John*)	*If new Customer, enter previous Customer below:*	
City of Georgetown		

7. TX SOS/CPA Filing Number	**8. TX State Tax ID** (11 digits)	**9. Federal Tax ID** (9 digits)	**10. DUNS Number** (*if applicable*)
		74-6000974	89592372

11. Type of Customer:	☐ Corporation	☐ Individual	Partnership: ☐ General ☐ Limited
Government: ☒ City ☐ County ☐ Federal ☐ Local ☐ State ☐ Other		☐ Sole Proprietorship	☐ Other:

12. Number of Employees	**13. Independently Owned and Operated?**
☐ 0-20 ☐ 21-100 ☐ 101-250 ☐ 251-500 ☒ 501 and higher	☒ **Yes** ☐ **No**

14. Customer Role (Proposed or Actual) – *as it relates to the Regulated Entity listed on this form. Please check one of the following*			
☒ Owner	☐ Operator	☐ Owner & Operator	☐ Other:
☐ Occupational Licensee	☐ Responsible Party	☐ VCP/BSA Applicant	

15. Mailing Address:	300-1 Industrial Ave							
	City	Georgetown	**State**	TX	**ZIP**	78626	**ZIP + 4**	8445

16. Country Mailing Information (*if outside USA*)	**17. E-Mail Address** (*if applicable*)

18. Telephone Number	**19. Extension or Code**	**20. Fax Number** (*if applicable*)

(512) 930-3555		(512) 930-3559

SECTION III: Regulated Entity Information

21. General Regulated Entity Information *(If 'New Regulated Entity" is selected, a new permit application is also required.)*

☒ New Regulated Entity ☐ Update to Regulated Entity Name ☐ Update to Regulated Entity Information

The Regulated Entity Name submitted may be updated, in order to meet TCEQ Core Data Standards (removal of organizational endings such as Inc, LP, or LLC).

22. Regulated Entity Name *(Enter name of the site where the regulated action is taking place.)*

D B Wood Lift Station

23. Street Address of the Regulated Entity: ***(No PO Boxes)***								
	City		**State**		**ZIP**		**ZIP + 4**	
24. County								

If no Street Address is provided, fields 25-28 are required.

25. Description to Physical Location:	The D B Wood Lift Station is approximately 1650 ft south of the intersection of D B wood Road and Oak Ridge Road.

26. Nearest City	**State**	**Nearest ZIP Code**
Georgetown	TX	78628

Latitude/Longitude are required and may be added/updated to meet TCEQ Core Data Standards. (Geocoding of the Physical Address may be used to supply coordinates where none have been provided or to gain accuracy).

27. Latitude (N) In Decimal:		30.648204407128745	**28. Longitude (W) In Decimal:**		-97.71735096427918
Degrees	Minutes	Seconds	Degrees	Minutes	Seconds
30	38	53.536	97	43	2.463

29. Primary SIC Code (4 digits)	**30. Secondary SIC Code** (4 digits)	**31. Primary NAICS Code** (5 or 6 digits)	**32. Secondary NAICS Code** (5 or 6 digits)
4952		221320	

33. What is the Primary Business of this entity? *(Do not repeat the SIC or NAICS description.)*

Lift Station

34. Mailing Address:	**300-1 Industrial Ave**							
	City	**Georgetown**	**State**	**TX**	**ZIP**	**78626**	**ZIP + 4**	**5446**
35. E-Mail Address:	**chris.pousson@georgetown.org**							

36. Telephone Number	**37. Extension or Code**	**38. Fax Number** *(if applicable)*
(512) 930-8162		**( ) -**

39. TCEQ Programs and ID Numbers Check all Programs and write in the permits/registration numbers that will be affected by the updates submitted on this form. See the Core Data Form instructions for additional guidance.

☐ Dam Safety	☐ Districts	☒ Edwards Aquifer	☐ Emissions Inventory Air	☐ Industrial Hazardous Waste
☐ Municipal Solid Waste	☐ New Source Review Air	☐ OSSF	☐ Petroleum Storage Tank	☐ PWS
☐ Sludge	☐ Storm Water	☐ Title V Air	☐ Tires	☐ Used Oil
☐ Voluntary Cleanup	☒ Wastewater	☐ Wastewater Agriculture	☐ Water Rights	☐ Other:

SECTION IV: Preparer Information

40. Name:	Jenny Vu	**41. Title:**	Environmental Engineer
42. Telephone Number	**43. Ext./Code**	**44. Fax Number**	**45. E-Mail Address**
(713 **)** 423-7328		**( ) -**	vujt2@cdmsmith.com

SECTION V: Authorized Signature

46. By my signature below, I certify, to the best of my knowledge, that the information provided in this form is true and complete, and that I have signature authority to submit this form on behalf of the entity specified in Section II, Field 6 and/or as required for the updates to the ID numbers identified in field 39.

Company:	CDM Smith, Inc.	**Job Title:**	Project Manager
Name *(In Print):*	Gerald S. Furrier, P.E.	**Phone:**	**(** 713 **)** 423- **7337**
Signature:		**Date:**	06/13/24