RANCHO DEL CIELO PHASE 4B

WATER POLLUTION ABATEMENT PLAN MODIFICATION APPLICATION (51118-61)

Prepared By:
PAPE-DAWSON CONSULTING ENGINEERS, LLC
Texas Board of Professional Engineers, Firm Registration # 470
10801 NORTH MOPAC EXPRESSWAY, BUILDING 3 – SUITE 200
AUSTIN, TEXAS 78759
(512) 454-8711



October 2024

PAPE-DAWSON ENGINEERS

Transportation | Water Resources | Land Development | Surveying | Environmental

RANCHO DEL CIELO PHASE 4B

WATER POLLUTION ABATEMENT PLAN MODIFICATION APPLICATION (51118-61)

October 2024

PAPE-DAWSON ENGINEERS

October 1, 2024

Ms. Lillian Butler
Texas Commission on Environmental Quality (TCEQ)
Region 11
12100 Park 35 Circle, Building A
Austin, Texas 78753

Re: Rancho Del Cielo Phase 4B
Water Pollution Abatement Plan Modification Application

Dear Ms. Butler:

Please find attached one (1) original of the Rancho Del Cielo Phase 4B Water Pollution Abatement Plan (WPAP) Modification Application. This WPAP Modification Application has been prepared in accordance with the Texas Administrative Code (30 TAC 213), and current policies for development over the Edwards Aquifer Recharge Zone.

This Water Pollution Abatement Plan Modification applies to an approximate 198.49-acre site as identified by the project limits. Please review the plan information for the items it is intended to address. If acceptable, please provide written approval of the plan in order that construction may begin at the earliest opportunity.

Appropriate review fee ($8,000) and fee application are included. If you have any questions or require additional information, please do not hesitate to contact me at your earliest convenience.

Sincerely,
Pape-Dawson Consulting Engineers, LLC.

Michael Fisher, P.E.
Associate Vice President

H:\PROJECTS\511\18\06\307 WPAP APPLICATION\REPORT\WPAP COVER LETTER.DOCX

Texas Commission on Environmental Quality

Edwards Aquifer Application Cover Page

Our Review of Your Application

The Edwards Aquifer Program staff conducts an administrative and technical review of all applications. The turnaround time for administrative review can be up to 30 days as outlined in 30 TAC 213.4(e). Generally administrative completeness is determined during the intake meeting or within a few days of receipt. The turnaround time for technical review of an administratively complete Edwards Aquifer application is 90 days as outlined in 30 TAC 213.4(e). Please know that the review and approval time is directly impacted by the quality and completeness of the initial application that is received. In order to conduct a timely review, it is imperative that the information provided in an Edwards Aquifer application include final plans, be accurate, complete, and in compliance with 30 TAC 213.

Administrative Review

1. Edwards Aquifer applications must be deemed administratively complete before a technical review can begin. To be considered administratively complete, the application must contain completed forms and attachments, provide the requested information, and meet all the site plan requirements. The submitted application and plan sheets should be final plans. Please submit one full-size set of plan sheets with the original application, and half-size sets with the additional copies.

   To ensure that all applicable documents are included in the application, the program has developed tools to guide you and web pages to provide all forms, checklists, and guidance. Please visit the below website for assistance: http://www.tceq.texas.gov/field/eapp.

2. This Edwards Aquifer Application Cover Page form (certified by the applicant or agent) must be included in the application and brought to the administrative review meeting.

3. Administrative reviews are scheduled with program staff who will conduct the review. Applicants or their authorized agent should call the appropriate regional office, according to the county in which the project is located, to schedule a review. The average meeting time is one hour.

4. In the meeting, the application is examined for administrative completeness. Deficiencies will be noted by staff and emailed or faxed to the applicant and authorized agent at the end of the meeting, or shortly after. Administrative deficiencies will cause the application to be deemed incomplete and returned.

   An appointment should be made to resubmit the application. The application is re-examined to ensure all deficiencies are resolved. The application will only be deemed administratively complete when all administrative deficiencies are addressed.

5. If an application is received by mail, courier service, or otherwise submitted without a review meeting, the administrative review will be conducted within 30 days. The applicant and agent will be contacted with the results of the administrative review. If the application is found to be administratively incomplete, it can be retrieved from the regional office or returned by regular mail. If returned by mail, the regional office may require arrangements for return shipping.

6. If the geologic assessment was completed before October 1, 2004 and the site contains "possibly sensitive" features, the assessment must be updated in accordance with the *Instructions to Geologists* (TCEQ-0585 Instructions).

Technical Review

1. When an application is deemed administratively complete, the technical review period begins. The regional office will distribute copies of the application to the identified affected city, county, and groundwater conservation district whose jurisdiction includes the subject site. These entities and the public have 30 days to provide comments on the application to the regional office. All comments received are reviewed by TCEQ.

2. A site assessment is usually conducted as part of the technical review, to evaluate the geologic assessment and observe existing site conditions. The site must be accessible to our staff. The site boundaries should be

clearly marked, features identified in the geologic assessment should be flagged, roadways marked and the alignment of the Sewage Collection System and manholes should be staked at the time the application is submitted. If the site is not marked the application may be returned.

3. We evaluate the application for technical completeness and contact the applicant and agent via Notice of Deficiency (NOD) to request additional information and identify technical deficiencies. There are two deficiency response periods available to the applicant. There are 14 days to resolve deficiencies noted in the first NOD. If a second NOD is issued, there is an additional 14 days to resolve deficiencies. If the response to the second notice is not received, is incomplete or inadequate, or provides new information that is incomplete or inadequate, the application must be withdrawn or will be denied. Please note that because the technical review is underway, whether the application is withdrawn or denied **the application fee will be forfeited**.
4. The program has 90 calendar days to complete the technical review of the application. If the application is technically adequate, such that it complies with the Edwards Aquifer rules, and is protective of the Edwards Aquifer during and after construction, an approval letter will be issued. Construction or other regulated activity may not begin until an approval is issued.

Mid-Review Modifications

It is important to have final site plans prior to beginning the permitting process with TCEQ to avoid delays.

Occasionally, circumstances arise where you may have significant design and/or site plan changes after your Edwards Aquifer application has been deemed administratively complete by TCEQ. This is considered a "Mid-Review Modification". Mid-Review Modifications may require redistribution of an application that includes the proposed modifications for public comment.

If you are proposing a Mid-Review Modification, two options are available:

- If the technical review has begun your application can be denied/withdrawn, your fees will be forfeited, and the plan will have to be resubmitted.
- TCEQ can continue the technical review of the application as it was submitted, and a modification application can be submitted at a later time.

If the application is denied/withdrawn, the resubmitted application will be subject to the administrative and technical review processes and will be treated as a new application. The application will be redistributed to the affected jurisdictions.

Please contact the regional office if you have questions. If your project is located in Williamson, Travis, or Hays County, contact TCEQ's Austin Regional Office at 512-339-2929. If your project is in Comal, Bexar, Medina, Uvalde, or Kinney County, contact TCEQ's San Antonio Regional Office at 210-490-3096

Please fill out all required fields below and submit with your application.

1. Regulated Entity Name: Rancho Del Cielo Phase 4B						**2. Regulated Entity No.:** RN111188447			
3. Customer Name: Lennar Homes of Texas Land & Construction, Ltd.						**4. Customer No.:** CN602412207			
5. Project Type: **(Please circle/check one)**	New		Modification			Extension		Exception	
6. Plan Type: **(Please circle/check one)**	WPAP	CZP	SCS	UST	AST	EXP	EXT	Technical Clarification	Optional Enhanced Measures
7. Land Use: **(Please circle/check one)**	Residential		Non-residential			**8. Site (acres):**			198.49
9. Application Fee:	$8,000.00		**10. Permanent BMP(s):**					Three (3) existing water quality ponds, Fifteen-feet (15') Engineered VFS	
11. SCS (Linear Ft.):	N/A		**12. AST/UST (No. Tanks):**					N/A	

13. County:	Williamson	14. Watershed:	Glasscock Branch

Application Distribution

Instructions: Use the table below to determine the number of applications required. One original and one copy of the application, plus additional copies (as needed) for each affected incorporated city, county, and groundwater conservation district are required. Linear projects or large projects, which cross into multiple jurisdictions, can require additional copies. Refer to the "Texas Groundwater Conservation Districts within the EAPP Boundaries" map found at:

http://www.tceq.texas.gov/assets/public/compliance/field_ops/eapp/EAPP%20GWCD%20map.pdf

For more detailed boundaries, please contact the conservation district directly.

Austin Region			
County:	**Hays**	**Travis**	**Williamson**
Original (1 req.)	___	___	✓
Region (1 req.)	___	___	✓
County(ies)	___	___	✓
Groundwater Conservation District(s)	___Edwards Aquifer Authority ___Barton Springs/ Edwards Aquifer ___Hays Trinity ___Plum Creek	___Barton Springs/ Edwards Aquifer	NA
City(ies) Jurisdiction	___Austin ___Buda ___Dripping Springs ___Kyle ___Mountain City ___San Marcos ___Wimberley ___Woodcreek	___Austin ___Bee Cave ___Pflugerville ___Rollingwood ___Round Rock ___Sunset Valley ___West Lake Hills	___Austin ___Cedar Park ___Florence ___Georgetown ___Jerrell ___Leander ___Liberty Hill ___Pflugerville ___Round Rock

San Antonio Region					
County:	**Bexar**	**Comal**	**Kinney**	**Medina**	**Uvalde**
Original (1 req.)	___	___	___	___	___
Region (1 req.)	___	___	___	___	___
County(ies)	___	___	___	___	___
Groundwater Conservation District(s)	___ Edwards Aquifer Authority ___Trinity-Glen Rose	___Edwards Aquifer Authority	___Kinney	___EAA ___Medina	___EAA ___Uvalde
City(ies) Jurisdiction	___Castle Hills ___Fair Oaks Ranch ___Helotes ___Hill Country Village ___Hollywood Park	___Bulverde ___Fair Oaks Ranch ___Garden Ridge ___New Braunfels ___Schertz	NA	___San Antonio ETJ (SAWS)	NA

	__San Antonio (SAWS) __Shavano Park				

I certify that to the best of my knowledge, that the application is complete and accurate. This application is hereby submitted to TCEQ for administrative review and technical review. Michael Fisher, P.E.
Print Name of Customer/Authorized Agent
Signature of Customer/Authorized Agent Date 10/9/24

FOR TCEQ INTERNAL USE ONLY				
Date(s)Reviewed:		Date Administratively Complete:		
Received From:		Correct Number of Copies:		
Received By:		Distribution Date:		
EAPP File Number:		Complex:		
Admin. Review(s) (No.):		No. AR Rounds:		
Delinquent Fees (Y/N):		Review Time Spent:		
Lat./Long. Verified:		SOS Customer Verification:		
Agent Authorization Complete/Notarized (Y/N):		Fee Check:	Payable to TCEQ (Y/N):	
Core Data Form Complete (Y/N):			Signed (Y/N):	
Core Data Form Incomplete Nos.:			Less than 90 days old (Y/N):	

GENERAL INFORMATION

General Information Form

Texas Commission on Environmental Quality

For Regulated Activities on the Edwards Aquifer Recharge and Transition Zones and Relating to 30 TAC §213.4(b) & §213.5(b)(2)(A), (B) Effective June 1, 1999

To ensure that the application is administratively complete, confirm that all fields in the form are complete, verify that all requested information is provided, consistently reference the same site and contact person in all forms in the application, and ensure forms are signed by the appropriate party.

Note: Including all the information requested in the form and attachments contributes to more streamlined technical reviews.

Signature

To the best of my knowledge, the responses to this form accurately reflect all information requested concerning the proposed regulated activities and methods to protect the Edwards Aquifer. This **General Information Form** is hereby submitted for TCEQ review. The application was prepared by:

Print Name of Customer/Agent: Michael Fisher, P.E.

Date: 10/9/24

Signature of Customer/Agent:



Project Information

1. Regulated Entity Name: Rancho Del Cielo Phase 4B
2. County: Williamson
3. Stream Basin: Glasscock Branch
4. Groundwater Conservation District (If applicable): N/A
5. Edwards Aquifer Zone:

   ☒ Recharge Zone
   ☐ Transition Zone

6. Plan Type:

   ☒ WPAP
   ☐ SCS
   ☒ Modification
   ☐ AST
   ☐ UST
   ☐ Exception Request

7. Customer (Applicant):

   Contact Person: Ally Benoit
   Entity: Lennar Homes of Texas Land and Constrcution, Ltd.
   Mailing Address: 13620 N FM 620 Bldg.B, Suite 150
   City, State: Austin, Texas Zip: 78717
   Telephone: (469) 583-9989 FAX: _____
   Email Address: Ally.Benoit@lennar.com

8. Agent/Representative (If any):

   Contact Person: Michael Fisher, P.E.
   Entity: Pape-Dawson Consulting Engineers, LLC
   Mailing Address: 10801 N MoPac Expressway, Bldg. 3, Suite 200
   City, State: Austin, Texas Zip: 78759
   Telephone: (512) 454-8711 FAX: _____
   Email Address: jfranklin@pape-dawson.com

9. Project Location:

   ☐ The project site is located inside the city limits of _____.
   ☐ The project site is located outside the city limits but inside the ETJ (extra-territorial jurisdiction) of _____.
   ☒ The project site is not located within any city's limits or ETJ.

10. ☒ The location of the project site is described below. The description provides sufficient detail and clarity so that the TCEQ's Regional staff can easily locate the project and site boundaries for a field investigation.

    From TCEQ's Austin office, travel north on I-35 North approximately 26.6 miles and take Exit 271 towards the I-35 Frontage Rd in Jarrell. Exit I-35 North and travel approximately 0.5 miles on the I-35 Frontage Rd before turning left onto CR 237 (Ronald Reagan Blvd). After approximately 0.5 miles, turn right to stay on CR 237. Travel approximately 0.8 more miles before arriving at the site. The site is located northwest of the intersection of CR 237 and CR 238.

11. ☒ **Attachment A – Road Map**. A road map showing directions to and the location of the project site is attached. The project location and site boundaries are clearly shown on the map.

12. ☒ **Attachment B - USGS / Edwards Recharge Zone Map**. A copy of the official 7 ½ minute USGS Quadrangle Map (Scale: 1" = 2000') of the Edwards Recharge Zone is attached. The map(s) clearly show:

    ☒ Project site boundaries.
    ☒ USGS Quadrangle Name(s).
    ☒ Boundaries of the Recharge Zone (and Transition Zone, if applicable).
    ☒ Drainage path from the project site to the boundary of the Recharge Zone.

13. ☒ **The TCEQ must be able to inspect the project site or the application will be returned**. Sufficient survey staking is provided on the project to allow TCEQ regional staff to locate the boundaries and alignment of the regulated activities and the geologic or manmade features noted in the Geologic Assessment.

    ☐ Survey staking will be completed by this date: _____

14. ☒ **Attachment C – Project Description**. Attached at the end of this form is a detailed narrative description of the proposed project. The project description is consistent throughout the application and contains, at a minimum, the following details:

    ☒ Area of the site
    ☒ Offsite areas
    ☒ Impervious cover
    ☒ Permanent BMP(s)
    ☒ Proposed site use
    ☒ Site history
    ☒ Previous development
    ☐ Area(s) to be demolished

15. Existing project site conditions are noted below:

    ☐ Existing commercial site
    ☐ Existing industrial site
    ☐ Existing residential site
    ☒ Existing paved and/or unpaved roads
    ☒ Undeveloped (Cleared)
    ☒ Undeveloped (Undisturbed/Uncleared)
    ☐ Other: _____

Prohibited Activities

16. ☒ I am aware that the following activities are prohibited on the Recharge Zone and are not proposed for this project:

    (1) Waste disposal wells regulated under 30 TAC Chapter 331 of this title (relating to Underground Injection Control);

    (2) New feedlot/concentrated animal feeding operations, as defined in 30 TAC §213.3;

    (3) Land disposal of Class I wastes, as defined in 30 TAC §335.1;

    (4) The use of sewage holding tanks as parts of organized collection systems; and

    (5) New municipal solid waste landfill facilities required to meet and comply with Type I standards which are defined in §330.41(b), (c), and (d) of this title (relating to Types of Municipal Solid Waste Facilities).

    (6) New municipal and industrial wastewater discharges into or adjacent to water in the state that would create additional pollutant loading.

17. ☒ I am aware that the following activities are prohibited on the Transition Zone and are not proposed for this project:

(1) Waste disposal wells regulated under 30 TAC Chapter 331 (relating to Underground Injection Control);

(2) Land disposal of Class I wastes, as defined in 30 TAC §335.1; and

(3) New municipal solid waste landfill facilities required to meet and comply with Type I standards which are defined in §330.41 (b), (c), and (d) of this title.

Administrative Information

18. The fee for the plan(s) is based on:

☒ For a Water Pollution Abatement Plan or Modification, the total acreage of the site where regulated activities will occur.
☐ For an Organized Sewage Collection System Plan or Modification, the total linear footage of all collection system lines.
☐ For a UST Facility Plan or Modification or an AST Facility Plan or Modification, the total number of tanks or piping systems.
☐ A request for an exception to any substantive portion of the regulations related to the protection of water quality.
☐ A request for an extension to a previously approved plan.

19. ☒ Application fees are due and payable at the time the application is filed. If the correct fee is not submitted, the TCEQ is not required to consider the application until the correct fee is submitted. Both the fee and the Edwards Aquifer Fee Form have been sent to the Commission's:

☐ TCEQ cashier
☒ Austin Regional Office (for projects in Hays, Travis, and Williamson Counties)
☐ San Antonio Regional Office (for projects in Bexar, Comal, Kinney, Medina, and Uvalde Counties)

20. ☒ Submit one (1) original and one (1) copy of the application, plus additional copies as needed for each affected incorporated city, groundwater conservation district, and county in which the project will be located. The TCEQ will distribute the additional copies to these jurisdictions. The copies must be submitted to the appropriate regional office.

21. ☒ No person shall commence any regulated activity until the Edwards Aquifer Protection Plan(s) for the activity has been filed with and approved by the Executive Director.

ATTACHMENT A

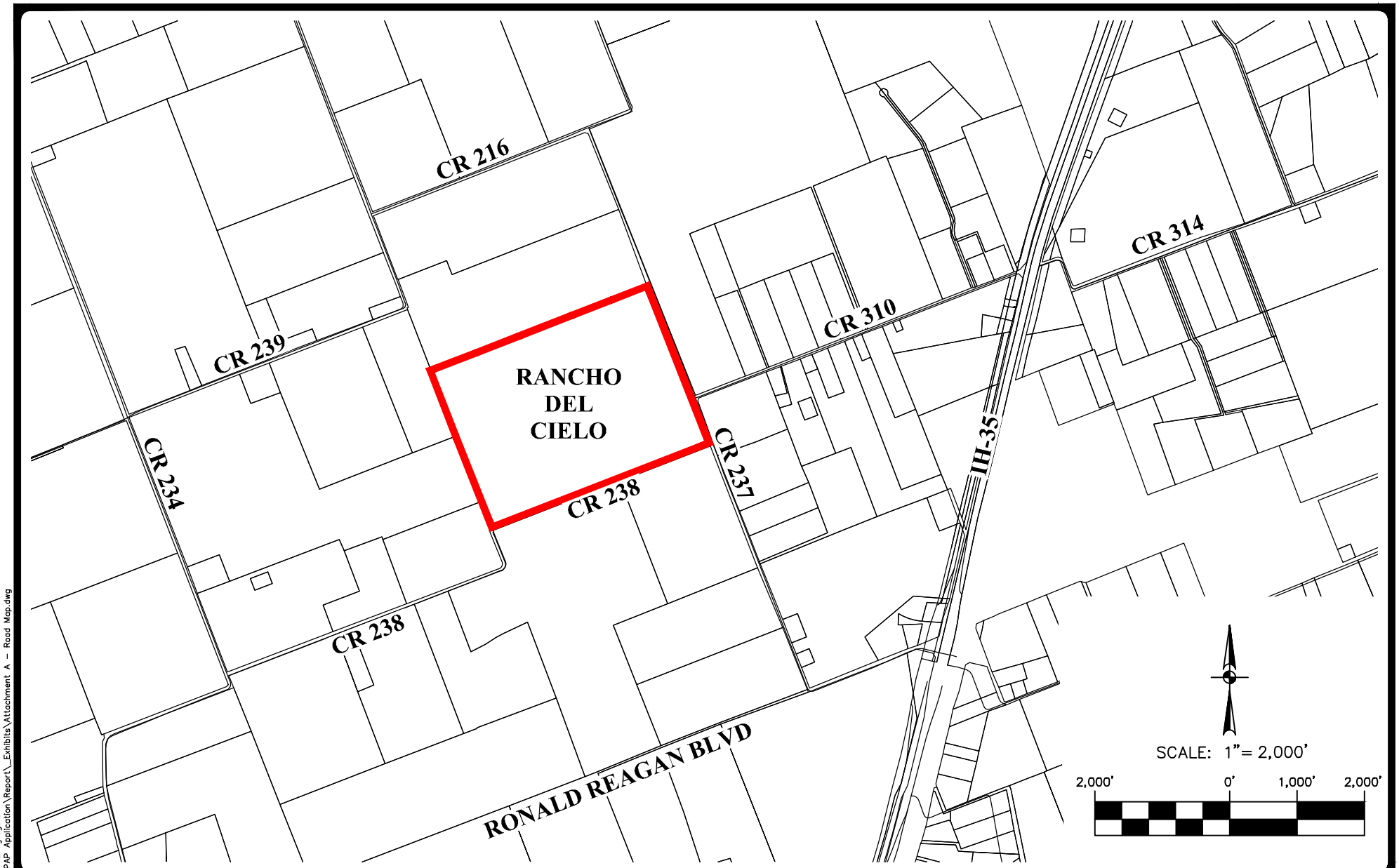

JOB NO. 51118-06
DATE DECEMBER 2022
DESIGNER EG
CHECKED JF DRAWN EG
SHEET 1 of 1

RANCHO DEL CIELO

WILLIAMSON COUNTY, TEXAS

ROAD MAP

PAPE-DAWSON ENGINEERS
AUSTIN I SAN ANTONIO I HOUSTON I FORT WORTH I DALLAS
10801 N MOPAC EXPY, BLDG 3, STE 200 I AUSTIN, TX 78759 I 512.454.8711
TBPE FIRM REGISTRATION #470 I TBPLS FIRM REGISTRATION #10028801

Date: Nov 29, 2022, 12:32pm User ID: grogers
File: H:\Projects\511\18\06\307 WPAP Application\Report_Exhibits\Attachment A - Road Map.dwg

THIS DOCUMENT HAS BEEN PRODUCED FROM MATERIAL THAT WAS STORED AND/OR TRANSMITTED ELECTRONICALLY AND MAY HAVE BEEN INADVERTENTLY ALTERED. RELY ONLY ON FINAL HARDCOPY MATERIALS BEARING THE CONSULTANT'S ORIGINAL SIGNATURE AND SEAL.

ATTACHMENT B

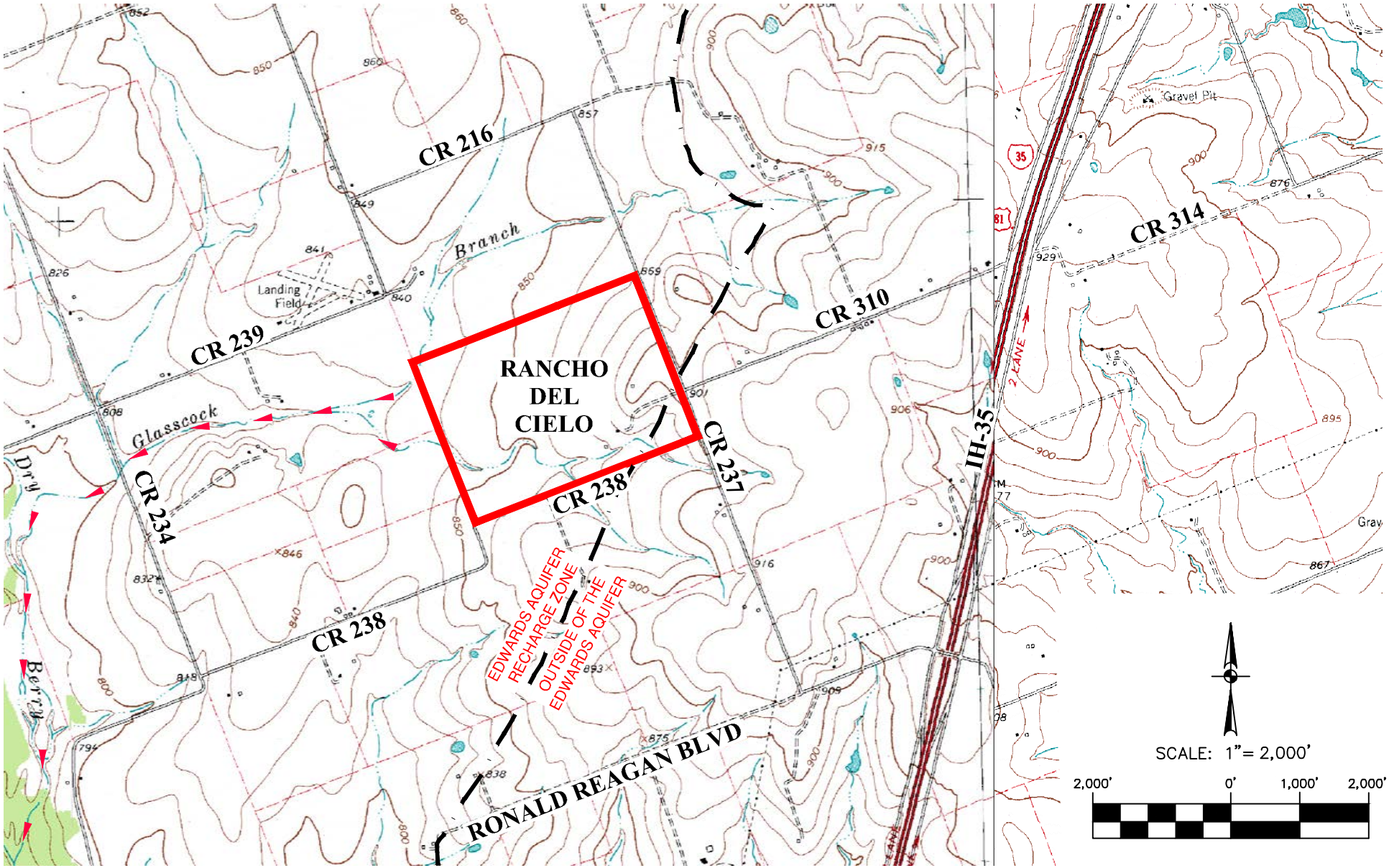

JOB NO. 51118-06
DATE DECEMBER 2022
DESIGNER EG
CHECKED JF DRAWN EG
SHEET 1 of 1

RANCHO DEL CIELO

WILLIAMSON COUNTY, TEXAS

USGS / EDWARDS AQUIFER RECHARGE ZONE MAP

PAPE-DAWSON ENGINEERS
AUSTIN | SAN ANTONIO | HOUSTON | FORT WORTH | DALLAS
10801 N MOPAC EXPY, BLDG 3, STE 200 | AUSTIN, TX 78759 | 512.454.8711
TBPE FIRM REGISTRATION #470 | TBPLS FIRM REGISTRATION #10028801

Date: Nov 29, 2022, 1:34pm User ID: grogers
File: H:\Projects\511\18\06\307 WPAP Application\Report\go-by_Exhibits\Attachment B - USGS Quad Map.dwg
THIS DOCUMENT HAS BEEN PRODUCED FROM MATERIAL THAT WAS STORED AND/OR TRANSMITTED ELECTRONICALLY AND MAY HAVE BEEN INADVERTENTLY ALTERED. RELY ONLY ON FINAL HARDCOPY MATERIALS BEARING THE CONSULTANT'S ORIGINAL SIGNATURE AND SEAL.

ATTACHMENT C

RANCHO DEL CIELO PHASE 4B
Water Pollution Abatement Plan Modification Application

PROJECT DESCRIPTION

Rancho Del Cielo Phase 4B is located on approximately 10.16 acres within an overall 198.49-acre multi-phase development proposed northwest of the intersection of County Road 237 and County Road 238 in Williamson County, Texas. The Phase 4B project limits are located primarily over the Edwards Aquifer Recharge Zone. The portion of the overall 198.49-acre property that is located over the Edwards Aquifer Recharge Zone is approximately 189.77 acres, as shown on the Water Quality Treatment Summary included with this application. The Phase 4B project of approximately 10.16 acres is the "total project area included in plan" as shown on Step 1 of the TSS Removal Calculations spreadsheets provided for Phase 4B. A Sewage Collection System (SCS) application for this development is currently being prepared and will be submitted concurrently to the Texas Commission on Environmental Quality (TCEQ).

Rancho Del Cielo Phase 4B is proposed for single-family residential development. The site is currently undeveloped. As shown in the geologic assessment provided, there is one (1) manmade geologic feature onsite (WW-1, an existing hand-dug water well) located within the overall Rancho Del Cielo Limits. This manmade geological feature is not located within the Phase 4B project limits. Cursory visual observation indicates that the site is generally clear of heavy vegetation and is primarily used as farmland. Please refer to the site geologic map provided with this geologic assessment for additional information.

The Texas Commission on Environmental Quality approved the Rancho del Cielo Phase 2 WPAP (EAPP ID No. 11003130) on September 23, 2022. The Phase 2 WPAP provided approval for approximately 26.96 acres of impervious cover for the construction of 329 homes and associated infrastructure including streets, utilities, one (1) batch detention pond (Pond 2A) and five (5) fifteen-foot (15') wide Engineered Vegetative Filter Strips (VFS).

This WPAP Modification revises the proposed land plan for the southern portion of the Phase 2 development from 17 residential units with access via a slip drive, to 20 single-family homes and two cul-de-sac roadways. This WPAP modification application includes clearing, grading, excavation, installation of utilities and drainage improvements, streets, and 20 homes with associated driveways. Total impervious cover within the phase 4B project limits is 0.98 acres. The land plan change reduces the total

permitted Phase 2 impervious cover by 0.39 acres from 26.96 acres to 26.57 acres of impervious cover. The location of 15' Engineered VFS to treat homes within the Phase 4B project area has also been revised to accommodate the proposed land plan changes. One (1) fifteen-foot (15') wide Engineered Vegetative Filter strip (VFS '10') is no longer proposed and four (4) new fifteen-foot (15') wide Engineered Vegetative Filter Strips (VFS '11-14') are proposed to provide treatment for the 20 single-family Phase 4B homes. The four (4) 15' Engineered Vegetative Filter Strips provide direct treatment for approximately 0.33 acres of new proposed impervious cover in the Rancho del Cielo Phase 4B project limits. The total amount of overtreatment provided by batch detention pond (Pond 2B) is proposed to increase with this WPAP Modification (from 1.17 acres to 1.27 acres). Overtreatment provided in batch detention Pond 2B for impervious cover associated with Phase 4B consists of approximately 0.65 acres.

All PBMPs have been designed in accordance with the TCEQ's Technical Guidance Manual (TGM) RG-348 (2005) to remove 80% of the increase in TSS from the site. The batch detention ponds have been designed to treat stormwater runoff at ultimate development within the Rancho Del Cielo subdivision, and water quality calculations have been provided with this application for the proposed Rancho Del Cielo Phase 4B development. Please see the Treatment Summary Table provided with the attached construction plan sheets for more detail.

Including the impervious cover proposed and approved with Rancho Del Cielo Phase 1 (EAPP ID No. 11002378 and 11002937), Rancho Del Cielo Phase 2 (EAPP IS No. 11003130), Rancho Del Cielo Phase 3 (EAPP ID No. 11002401), and Rancho Del Cielo Phase 4 (EAPP ID No. 11004005), the total impervious cover currently proposed within the 198.49-acre Rancho Del Cielo project limits over the EARZ is 80.66 acres.

ELECTRONICALLY RECORDED 2021181477
Williamson County, Texas Total Pages: 5

SPECIAL WARRANTY DEED

THE STATE OF TEXAS §
§ KNOW ALL MEN BY THESE PRESENTS:
COUNTY OF WILLIAMSON §

THAT, LENNAR HOMES OF TEXAS LAND AND CONSTRUCTION, LTD., a Texas limited partnership ("Grantor"), for and in consideration of the sum of $10.00 cash in hand paid by KL LHB3 AIV LLC, a Delaware limited liability company ("Grantee"), whose address is c/o Kennedy Lewis Investment Management LLC, 111 West 33rd Street, Suite 1910, New York, NY 10120, Attn.: Anthony Pasqua, and other good and valuable consideration, the receipt and sufficiency of which are hereby acknowledged by Grantor, has GRANTED, SOLD and CONVEYED, and by these presents does GRANT, SELL and CONVEY unto Grantee, that certain real property situated in Williamson County, Texas, and described in Exhibit "A" attached hereto and made a part hereof for all purposes (the "Lots"), and all buildings, fixtures and other improvements located on the Lots, if any, together with all and singular the rights, privileges, hereditaments and appurtenances pertaining to such real property, including, but not limited to, all right, title and interest of Grantor, if any, in and to (1) any strips and gores, if any, between the Lots and any abutting properties, whether owned or claimed by deed, limitations or otherwise; and (2) any land lying within any highway, avenue, street, road, alley, easement or right of way, open or proposed, in, or across, abutting or adjacent to the Lots (all of such real property, rights and appurtenances herein referred to collectively as the "Property").

This conveyance is made by Grantor and accepted by Grantee subject only to the easements, restrictions and other matters reference now of record to the extent the same are validly existing and applicable to the Property and further subject to all matters that a current, accurate survey of the Property would show (collectively, the "Permitted Exceptions").

TO HAVE AND TO HOLD the Property, together with, all and singular, the rights and appurtenances thereto in anywise belonging, to Grantee and Grantee's successors and assigns forever; and subject only to the Permitted Exceptions, Grantor does hereby bind Grantor and Grantor's successors and assigns to warrant and forever defend, all and singular, the Property unto the Grantee and Grantee's successors and assigns, against every person whomsoever lawfully claiming or to claim the same, or any part thereof by, through or under Grantor, but not otherwise.

[Signature Page Immediately Follows]

Unofficial Document

EXECUTED to be effective the 22nd day of November, 2021.

GRANTOR:

LENNAR HOMES OF TEXAS LAND AND CONSTRUCTION, LTD.,
a Texas limited partnership

By: U.S. Home Corporation, a Delaware corporation, its General Partner

By: _____
Kenneth T. Blaker,
Authorized Agent

STATE OF Texas)
)
COUNTY OF Williamson)

This instrument was acknowledged before me on November 22, 2021, by Kenneth T. Blaker, an Authorized Agent of U.S. Home Corporation, a Delaware corporation, the General Partner of LENNAR HOMES OF TEXAS LAND AND CONSTRUCTION, LTD., a Texas limited partnership, on behalf of said corporation and limited partnership.

SAMANTHA ILACQUA
Notary Public, State of Texas
Comm. Expires 12-27-2022
Notary ID 130023832

_____
Notary Public, State of Tx
Name: Samantha Ilacqua
My Commission Expires: 12-27-22

After Recording, Return to:

KL LHB3 AIV LLC
c/o Kennedy Lewis Investment Management LLC
111 West 33rd Street, Suite 1910
New York, NY 10120
Attn.: Anthony Pasqua

Unofficial Document

EXHIBIT A
LEGAL DESCRIPTION

FIELD NOTE DESCRIPTION OF 198.487 ACRES OF LAND OUT OF THE E. PARSONS SURVEY, ABSTRACT NO. 494, WILLIAMSON COUNTY, TEXAS, BEING TRACT ONE, CALLED 200 ACRES, IN A DEED TO BARBARA JEAN LESCHBER RECORDED IN DOCUMENT NUMBER 2001010135 OF THE OFFICIAL PUBLIC RECORDS OF WILLIAMSON COUNTY, TEXAS, BEING MORE PARTICULARLY DESCRIBED IN A DEED TO FRANK MILLER RECORDED IN VOLUME 372, PAGE 514 OF THE DEED RECORDS OF WILLIAMSON COUNTY, TEXAS. THE SAID 198.487 ACRES OF LAND BEING MORE PARTICULARLY DESCRIBED BY METES AND BOUNDS AS FOLLOWS:

BEGINNING, at a 1/2 inch diameter steel pin found with cap marked FOREST at the intersection of the west line of County Road 237 with the north line of County Road 238 for the southeast corner of the herein described tract;

THENCE, S 68°47'21" W, a distance of 3455.91 feet along the north line of County Road 238 to a 1/2 inch diameter steel pin found with cap marked FOREST at the recognized southwest corner of the said 200 acre Leschber tract, the same being at the southeast corner of an apparent remainder portion of an abandoned County Road;

THENCE, N 21°39'32" W, along the recognized west line of the said 200 acre Leschber tract, at 428.11 feet passing the northeast corner of the said apparent remainder portion of an abandoned County Road (from which a 1/2 inch diameter steel pin found at the northeast corner of that certain 37.63 acre tract described in a deed to Jarrell ISD recorded in Document Number 2010064132 of the Official Public Records of Williamson County, Texas bears S 69°25'07" W, 34.70 feet), the same being at the computed southeast corner of that certain 52 acre tract called Second Tract in a deed to Hubert F. McLaurin and wife, Lorene McLaurin recorded in Volume 342, Page 595 of the Deed Records of Williamson County, Texas and continuing for a total distance of 1455.67 feet to a 1/2 inch diameter steel pin found at the recognized northeast corner of the said 52 acre McLaurin tract, the same being the southeast corner of that certain 33.99 acre tract conveyed to Sterling O. Frymire in a deed recorded in Volume 2135, Page 703 of the Official Records of Williamson County, Texas and being more particularly described in a deed to the Veterans Land Board of Texas recorded in Volume 486, Page 334 of the Deed Records of Williamson County, Texas;

THENCE, N 21°15'28" W, a distance of 1043.19 feet along the west line of the said 200 acre Leschber tract, the same being the east line of the said 33.99 acre Frymire tract, to a steel pin set at the recognized northwest corner of the said 200 acre Leschber tract, the same being the recognized southwest corner of that certain 101.91 acre tract described in a deed to John S. Danek and Jacqueline Danek recorded in Document Number 2000084380 of the Official Public Records of Williamson County, Texas, from which a 1/2 inch diameter steel pin found at the northeast corner of the said 33.99 acre Frymire tract bears N 21°15'28" W, 998.58 feet;

THENCE, along the recognized north line of the said 200 acre Leschber tract as fenced, the same being the recognized south line of the said 101.91 acre Danek tract, the following five (5) courses and distances:

1) N 68°44'55" E, 737.37 feet to a 1/2 inch diameter steel pin found;

2) N 68°45'29" E, 677.05 feet to a 1/2 inch diameter steel pin found;

3) N 68°42'15" E, 840.22 feet to a 1/2 inch diameter steel pin found;

4) N 68°44'25" E, 643.56 feet to a 1/2 inch diameter steel pin found;

5) N 68°44'06" E, 557.69 feet to a 1/2 inch diameter steel pin set on the west line of County Road 237 at the recognized northeast corner of the said 200 acre Leschber tract and recognized southeast corner of the said 101.91 acre Danek tract, from which a 1/2 inch diameter steel pin found at the northeast corner of the said 101.91 acre Danek tract bears N 21°29'04" W, 1239.93 feet;

Unofficial Document

THENCE, S 21°29'29" E, a distance of 2502.05 feet along the west line of County Road 237 to the PLACE OF BEGINNING, containing 198.487 acres of land, more or less.

SAVE AND EXCEPT that certain 0.230 acre tract conveyed under that Special Warranty Deed recorded under County Clerk's File No. 2020032432, 2020032433, 2020032434, 2020032435, and 2020032436, Official Public records of Williamson County, Texas.

NOTE: The Company is prohibited from insuring the area or quantity of the land described herein. Any statement in the above legal description as to the area or quantity of land is not a representation that such area or quantity is correct, but is made solely for informational and/or identification purposes and does not override the exception contained in Schedule B, Item 2 herein.

Unofficial Document

ELECTRONICALLY RECORDED
OFFICIAL PUBLIC RECORDS

2021181477

Pages: 5 Fee: $38.00
11/30/2021 08:40 AM
KCURRIE



Nancy E. Rister, County Clerk
Williamson County,Texas

Unofficial Document

198.487 AC.

(200 ACRES)
BARBARA JEAN LESCHBER
DOC. 2001010135
TRACT ONE

DESCRIBED
(200 ACRES)
FRANK MILLER
VOL. 372, PG. 514

(101.91 ACRES)
JOHN S. DANEK AND
JACQUELINE DANEK
DOC. 2000084380

(88.20 ACRES)
BRYAN D. MILLER
DOC. 2013054119

(12.75 ACRES)
MICHAEL W. BARTLETT AND WIFE
ELIZABETH PRICE BARTLETT
VOL. 2715, PG. 519
TRACT II

(52 ACRES)
HUBERT F. McLAURIN AND WIFE,
LORENE McLAURIN
VOL. 342, PG. 595
SECOND TRACT

(33.89 ACRES)
STRUNG O. FITZWATER
VOL. 2135, PG. 703
DESCRIBED VOL. 486, PG. 334

(37.63 ACRES)
JARRELL ISD
DOC. 2010064132

(162.93 ACRES)
WESS A. CASSENS, JR., ET AL
VOL. 1867, PG. 471

DESCRIBED VOL. 461, PG. 42

(64 ACRES)
BARBARA JEAN LESCHBER
DOC. 2001010135
TRACT TWO

DESCRIBED
(64 ACRES)
(EXCLUSIVE OF PUBLIC ROADS)
VOL. 285, PG. 88

N21°15'28"W 1043.19'
[N21°15'28"W 1043.19']

N21°15'28"W 898.95'

N68°44'55"E 737.37'

N68°45'29"E 677.05'

N68°42'15"E 840.22'
[S71°00'00"W 3454.53']
(N71°E 3427.77')

N68°44'25"E 643.56'

N68°44'06"E 557.69'

S21°19'28"E 2202.95'
(S21°E 2241.90')

N21°19'28"W 1238.93'
[S19°E 1230.94']

S68°47'21"W 3465.91'
(S71°W 3427.77')

N68°32'32"W 453.67'
[S70°E 10.53']

S69°25'07"W 34.70'

N21°32'09"W 451.67'
[N21°00'W 451.67']

S68°47'21"W 425.11'

COUNTY RD 237

COUNTY RD 238

COUNTY RD 310

P.O.B.

FENCE 0.6' EAST

FENCE 1.7' WEST

FENCE 0.5' WEST

FENCE 3.8' WEST

FENCE 4.8' WEST

FENCE 2.8' WEST

CALLED WEST LINE
OLD COUNTY ROAD
DOC. 2010064132

APPARENT OLD WELL

METAL BARN

CULVERT

AXLE

T.P. & L. ELEC EASE.
VOL. 514, PG. 523
(NO WIDTH STATED)

15' WIDE ELEC EASE.
T.P. & L.
VOL. 1756, PG. 483

+/- 262' ELEC EASE.
T.P. & L.
VOL. 1582, PG. 153
(NO WIDTH STATED)

5/8

3/4

F

GRAPHIC SCALE

150 0 75 150 300 600

(IN FEET)
1 inch = 150 ft.

LEGEND

- CONCRETE MONUMENT FOUND
- 1/2"STEEL PIN FOUND (UNLESS NOTED)
- F ● 1/2"STEEL PIN FOUND W/CAP MARKED FOREST
- ○ 1/2"STEEL PIN SET W/CAP MARKED "LENZ & ASSOC."
- PIPE FOUND
- NAIL FOUND
- COMPUTED POINT
- F/C ○ FENCE CORNER
- P.U.E. PUBLIC UTILITY EASEMENT
- D.E. DRAINAGE EASEMENT
- W.W.E. WASTEWATER EASEMENT
- W.L.E. WATERLINE EASEMENT
- B.L. BUILDING LINE
- PH FIRE HYDRANT
- WWCO WASTEWATER CLEANOUT
- WWMH WASTEWATER MANHOLE
- (BRG.-DIST.) RECORD CALL
- (BRG.-DIST.) RECORD CALL ADJOINER DEED OR AS INDICATED
- T.P.& L. TEXAS POWER & LIGHT
- P.O.C. POINT OF COMMENCEMENT
- P.O.B. POINT OF BEGINNING
- —OU— OVERHEAD UTILITY
- UTILITY POLE
- GUY WIRE
- WOOD FENCE
- W WATER VALVE
- —X— WIRE FENCE
- ØPH PHONE RISER

NOTES:

1) BEARING BASIS: TEXAS COORDINATE SYSTEM OF 1983 (NAD83), CENTRAL ZONE.

2) THERE ARE INTERIOR CROSS FENCES LOCATED ON THE PROPERTY WHICH ARE NOT SHOWN.

3) THERE ARE INTERIOR DIRT ROADS LOCATED ON THE PROPERTY WHICH ARE NOT SHOWN.

TO: INDEPENDENCE TITLE COMPANY & ROBERT J. WILSON, TRUSTEE;

THE UNDERSIGNED, A REGISTERED PROFESSIONAL LAND SURVEYOR IN THE STATE OF TEXAS, HEREBY STATES THAT THIS SURVEY WAS THIS DAY MADE ON THE GROUND BY ME OR UNDER MY SUPERVISION AND THAT VISIBLE AND APPARENT IMPROVEMENTS, UTILITIES, AND/OR ROADWAYS ARE SHOWN HEREON, AND THAT EXCEPT AS SHOWN HEREON, THIS PROPERTY HAS ACCESS TO AND FROM A PUBLIC ROADWAY. THIS SURVEY IS IN COMPLIANCE WITH THE MINIMUM STANDARDS AS SET FORTH BY THE TEXAS BOARD OF PROFESSIONAL LAND SURVEYING.

DATE OF SURVEY: JULY 2, 2018

TIMOTHY R. LENZ, R.P.L.S. No. 4393

STATE OF TEXAS · TIMOTHY A. LENZ · 4393 · REGISTERED PROFESSIONAL LAND SURVEYOR

EASEMENT NOTES:

1) PROPERTY NOT SUBJECT TO EASEMENT TO TEXAS POWER & LIGHT COMPANY, VOL. 283, PAGE 395, DEED RECORDS OF WILLIAMSON COUNTY, TEXAS.

2) PROPERTY NOT SUBJECT TO EASEMENT TO TEXAS POWER & LIGHT COMPANY, VOL. 298, PAGE 534, DEED RECORDS OF WILLIAMSON COUNTY, TEXAS.

3) PROPERTY IS SUBJECT TO EASEMENT TO TEXAS POWER & LIGHT COMPANY, VOL. 514, PAGE 523, DEED RECORDS OF WILLIAMSON COUNTY, TEXAS, AS SHOWN PLOTTED HEREON.

4) PROPERTY IS SUBJECT TO EASEMENT TO TEXAS POWER & LIGHT COMPANY, VOL. 1582, PAGE 153, OFFICIAL RECORDS OF WILLIAMSON COUNTY, TEXAS, AS SHOWN PLOTTED HEREON.

5) PROPERTY IS SUBJECT TO EASEMENT TO TEXAS POWER & LIGHT COMPANY, VOL. 1756, PAGE 483, OFFICIAL RECORDS OF WILLIAMSON COUNTY, TEXAS, AS SHOWN PLOTTED HEREON.

G.F. No: 1810465-WSR
REFERENCE: ROBERT J. WILSON, TRUSTEE

198.487 ACRES OF LAND
E. PARSONS SURVEY, ABSTRACT NO. 494
WILLIAMSON COUNTY, TEXAS

BEING MORE PARTICULARLY DESCRIBED
BY METES AND BOUNDS ATTACHED

LENZ & ASSOCIATES, INC.
FIRM No. 100290-00
COMPLETE PROFESSIONAL LAND SURVEYING SERVICES
(512) 443-1174
4303 RUSSELL DRIVE
AUSTIN, TEXAS 78704

SURVEY #: 2018-0693 F.B. 1083/1

GEOLOGIC ASSESSMENT

Geologic Assessment

Texas Commission on Environmental Quality

For Regulated Activities on The Edwards Aquifer Recharge/transition Zones and Relating to 30 TAC §213.5(b)(3), Effective June 1, 1999

To ensure that the application is administratively complete, confirm that all fields in the form are complete, verify that all requested information is provided, consistently reference the same site and contact person in all forms in the application, and ensure forms are signed by the appropriate party.

Note: Including all the information requested in the form and attachments contributes to more streamlined technical reviews.

Signature

To the best of my knowledge, the responses to this form accurately reflect all information requested concerning the proposed regulated activities and methods to protect the Edwards Aquifer. My signature certifies that I am qualified as a geologist as defined by 30 TAC Chapter 213.

Print Name of Geologist: Russell C Ford Telephone: 512 442-1122

Date: 2/26/2021 Fax: _____

Represented Party: Consultants, Inc. (Name of Company and TBPG or TBPE registration number)

Signature of Geologist

STATE OF TEXAS RUSSELL C. FORD GEOLOGY #1185 LICENSED PROFESSIONAL

Regulated Entity Name: Rancho Del Cielo Phase 1, NW corner CR 238 and 237, Jarrell, Texas

2/26/2021

Project Information

1. Date(s) Geologic Assessment was performed: 4/13/18 and 2/24/2021
2. Type of Project:
   - ☒ WPAP
   - ☒ SCS
   - ☐ AST
   - ☐ UST
3. Location of Project:
   - ☒ Recharge Zone
   - ☒ Transition Zone
   - ☐ Contributing Zone within the Transition Zone

4. ☒ **Attachment A - Geologic Assessment Table**. Completed Geologic Assessment Table (Form TCEQ-0585-Table) is attached.

5. ☒ Soil cover on the project site is summarized in the table below and uses the SCS Hydrologic Soil Groups* (Urban Hydrology for Small Watersheds, Technical Release No. 55, Appendix A, Soil Conservation Service, 1986). If there is more than one soil type on the project site, show each soil type on the site Geologic Map or a separate soils map.

Table 1 - Soil Units, Infiltration Characteristics and Thickness

Soil Name	Group*	Thickness(feet)
HuB	D	0-5
HcB	D	0-5
DoC	D	0-5
AwC2	C	0-5
WhC	C	0-5
AuB	D	0-5
CaC	D	0-5

** Soil Group Definitions (Abbreviated)*

A. Soils having a high infiltration rate when thoroughly wetted.

B. Soils having a moderate infiltration rate when thoroughly wetted.

C. Soils having a slow infiltration rate when thoroughly wetted.

D. Soils having a very slow infiltration rate when thoroughly wetted.

6. ☒ **Attachment B** – **Stratigraphic Column**. A stratigraphic column showing formations, members, and thicknesses is attached. The outcropping unit, if present, should be at the top of the stratigraphic column. Otherwise, the uppermost unit should be at the top of the stratigraphic column.

7. ☒ **Attachment C – Site Geology**. A narrative description of the site specific geology including any features identified in the Geologic Assessment Table, a discussion of the potential for fluid movement to the Edwards Aquifer, stratigraphy, structure(s), and karst characteristics is attached.

8. ☒ **Attachment D – Site Geologic Map(s)**. The Site Geologic Map must be the same scale as the applicant's Site Plan. The minimum scale is 1": 400'

   Applicant's Site Plan Scale: 1" = 400 '
   Site Geologic Map Scale: 1" = 400'
   Site Soils Map Scale (if more than 1 soil type): 1" = 400'

9. Method of collecting positional data:

   ☒ Global Positioning System (GPS) technology.
   ☐ Other method(s). Please describe method of data collection: _____

10. ☒ The project site and boundaries are clearly shown and labeled on the Site Geologic Map.
11. ☒ Surface geologic units are shown and labeled on the Site Geologic Map.
12. ☒ Geologic or manmade features were discovered on the project site during the field investigation. They are shown and labeled on the Site Geologic Map and are described in the attached Geologic Assessment Table.

    ☐ Geologic or manmade features were not discovered on the project site during the field investigation.
13. ☒ The Recharge Zone boundary is shown and labeled, if appropriate.
14. All known wells (test holes, water, oil, unplugged, capped and/or abandoned, etc.): If applicable, the information must agree with Item No. 20 of the WPAP Application Section.

    ☒ There are 1 (#) wells present on the project site and the locations are shown and labeled. (Check all of the following that apply.)
    - ☐ The wells are not in use and have been properly abandoned.
    - ☐ The wells are not in use and will be properly abandoned.
    - ☒ The wells are in use and comply with 16 TAC Chapter 76.

    ☐ There are no wells or test holes of any kind known to exist on the project site.

Administrative Information

15. ☒ Submit one (1) original and one (1) copy of the application, plus additional copies as needed for each affected incorporated city, groundwater conservation district, and county in which the project will be located. The TCEQ will distribute the additional copies to these jurisdictions. The copies must be submitted to the appropriate regional office.

ATTACHMENT A

GEOLOGIC ASSESSMENT TABLE			PROJECT NAME: Rancho Del Cielo Phase 1, NW Corner CR 238 and 237, Jarrell, Texas																	
LOCATION			FEATURE CHARACTERISTICS												EVALUATION			PHYSICAL SETTING		
1A	1B *	1C*	2A	2B	3	4			5	5A	6	7	8A	8B	9	10		11		12
FEATURE ID	LATITUDE	LONGITUDE	FEATURE TYPE	POINTS	FORMATION	DIMENSIONS (FEET)			TREND (DEGREES)	DOM	DENSITY (NO/FT)	APERTURE (FEET)	INFILL	RELATIVE INFILTRATION RATE	TOTAL	SENSITIVITY		CATCHMENT AREA (ACRES)		TOPOGRAPHY
						X	Y	Z		10						<40	≥40	<1.6	≥1.6	
WW-1	30.7822	-97.6422	MB	30	Kdr	10	10	25						5	35	X			X	Drainage

* DATUM: NAD27

2A TYPE	TYPE	2B POINTS
C	Cave	30
SC	Solution cavity	20
SF	Solution-enlarged fracture(s)	20
F	Fault	20
O	Other natural bedrock features	5
MB	Manmade feature in bedrock	30
SW	Swallow hole	30
SH	Sinkhole	20
CD	Non-karst closed depression	5
Z	Zone, clustered or aligned features	[illegible]

8A INFILLING	
N	None, exposed bedrock
C	Coarse - cobbles, breakdown, sand, gravel
O	Loose or soft mud or soil, organics, leaves, sticks, dark colors
F	Fines, compacted clay-rich sediment, soil profile, gray or red colors
V	Vegetation. Give details in narrative description
FS	Flowstone, cements, cave deposits
X	Other materials

12 TOPOGRAPHY

Cliff, Hilltop, Hillside, Drainage, Floodplain, Streambed

I have read, understand, and have complied the Texas Natural Resource Conservation Commission's Instructions to Geologists. The information [illegible] that document and is a true representation of the conditions observed in the field.

My signature certifies that I [illegible] as a geologist as defined by 30 TAC 213

_____ Date _____

TNRCC-0585-Table (Rev. 5-1-02)

Sheet _____ of _____

2/26/2021

ATTACHMENT B

Stratigraphic Column
Rancho Del Cielo Phase 1
NW Corner CR 238 and 237
Jarrell, Texas

HYDROGEOLOGIC SUBDIVISION	FORMATION	THICKNESS (feet)	LITHOLOGY
Confining Unit	Del Rio Formation	60	Calcareous clay with abundant fossils.
Edwards Aquifer	Georgetown Formation	65	Nodular, fossiliferous limestone interbedded with marl

Source: Senger, Collins and Kreitler, 1990



ATTACHMENT C
SITE-SPECIFIC GEOLOGY

The Geologic Assessment (GA) of the Rancho Del Cielo Phase 1 site was performed by Mr. Russell C. Ford, P.G., of Terracon on April 13, 2018 and February 24, 2021. The site is located at the northwest intersection of CR 238 and 237 in Jarrell, Texas, and consists of an approximate 198-acre tract of naturally vegetated, agricultural, land. The site is currently being cultivated.

Exhibit 1 (attached) is a site location map depicting the site in relation to the surrounding area. The areas immediately surrounding the site are primarily agricultural lands. The site is characterized as sloping to the west-northwest and is currently under cultivation. A small drainage way crosses through the southern portion of the site.

The surficial geologic units present at the site has been identified as the Georgetown Formation and the Del Rio Formation. The Georgetown Formation overlies the Edwards and is the uppermost formation of the Edwards aquifer. The formation consists of nodular, fossiliferous limestone interbedded with marl and is about 65 feet thick in the area. The Del Rio Formation is a calcareous, fossiliferous clay containing small deposits of pyrite. The formation is about 60 feet thick in the area and forms the upper confining unit of the Edwards aquifer. The site is located almost entirely within the recharge zone of the Edwards aquifer. The recharge zone boundary crosses the far southeastern corner of the site (see Exhibit 1). Attachment B (attached) is a stratigraphic column prepared for the site. Exposure of these units onsite is obscured by the existing soil cover and site vegetation. Exhibit 2 (attached) is a geologic map of the site. No evidence of any faulting was observed on the site. However, based on a review of available geologic maps of the site, a mapped fault is shown crossing through the approximate center of the site. See Exhibit 2 for the approximate location of the fault. The fault separates the Georgetown Formation from the overlying Del Rio Formation and trends to the northeast and is associated with the Balcones fault zone, which is comprised of normal, high-angle faults, that are generally down-thrown to the southeast. The Balcones fault zone represents the dominant structural trend of the area.

No geologic features were observed on the site or within the 3 small areas associated with the proposed onsite wastewater system where the 50-foot buffer extends offsite onto adjacent properties (see highlighted areas on Exhibit 2). An existing hand dug cistern/water well is located in the south-central portion of the site. The well is approximately 25 feet deep and is covered with a metal plate held down with boulders which prevented access to the well. The well is currently in use as a source of irrigation water. Due to the lack of any significant sensitive recharge features observed on the site and the presence of a relatively impermeable soil cover present, the potential for fluid movement to the Edwards aquifer beneath the site is considered low.



2/26/2021

UNITED STATES – DEPARTMENT OF THE INTERIOR – GEOLOGICAL SURVEY

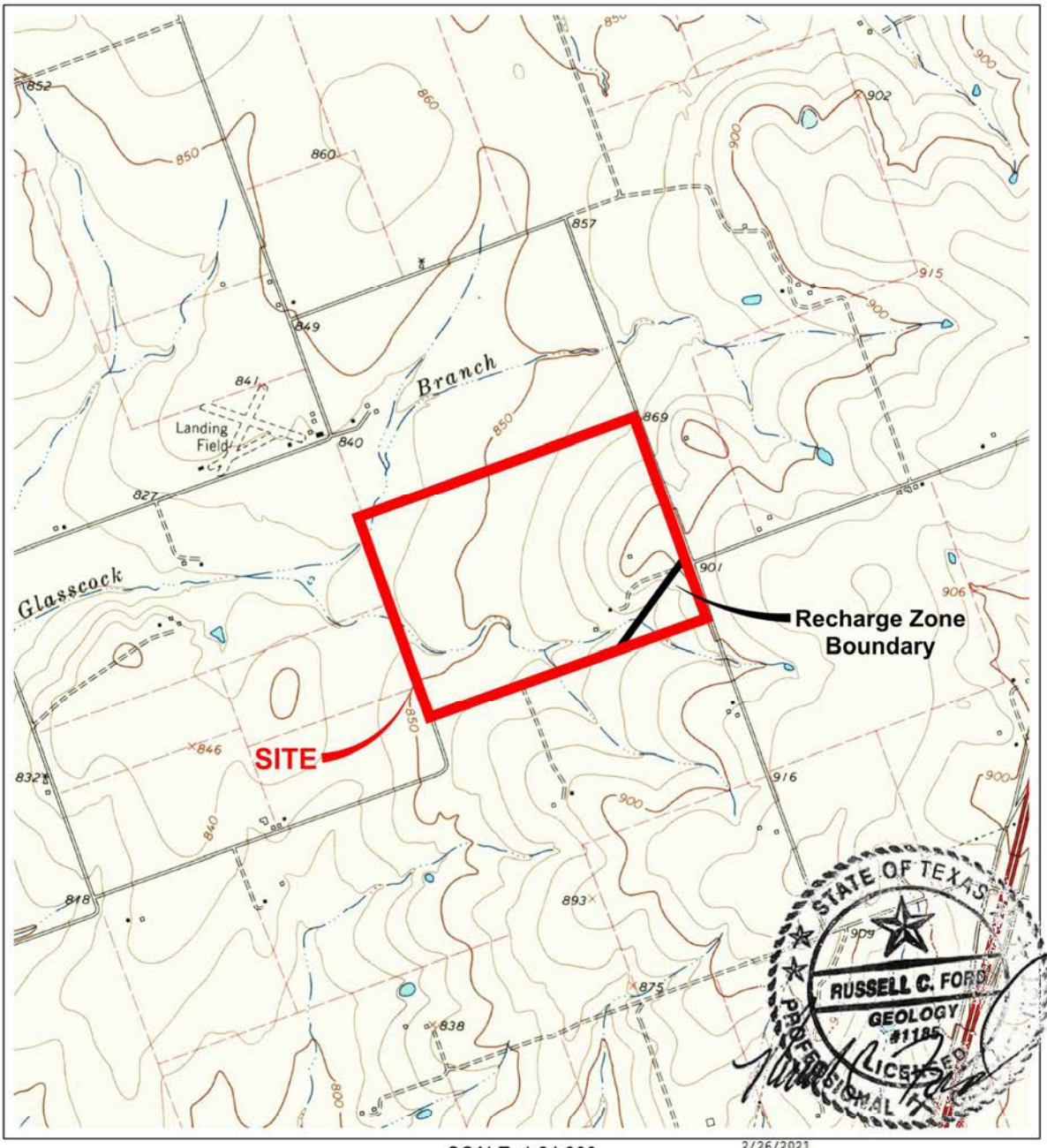

2/26/2021

SCALE 1:24,000

1 .5 0 KILOMETERS 1 2

1000 0 METERS 1000 2000

1 .5 0 1

MILES

1000 0 1000 2000 3000 4000 5000 6000 7000 8000 9000 10000

CONTOUR INTERVAL 10 FEET

NATIONAL GEODETIC VERTICAL DATUM OF 1929

Cobbs Cavern, Texas

N3045-W9737.5

1964

7.5 MINUTE SERIES (TOPOGRAPHIC)

Project Mngr: RF	Project No. 96187234A	Terracon Consulting Engineers and Scientists	TOPOGRAPHIC MAP	EXHIBIT
Drawn By: ATX Drafting	Scale: AS SHOWN	5307 INDUSTRIAL OAKS BLVD. - #160 AUSTIN, TX 78735	Rancho Del Cielo Phase 1	1
Checked By: RF	File No. 96187234A	PH. (512) 442-1122 FAX (512) 442-1181	NW Corner of C.R. 238 & C.R. 237	
Approved By: RF	Date: Feb 15, 2021		Jarrell, Williamson County, Texas	

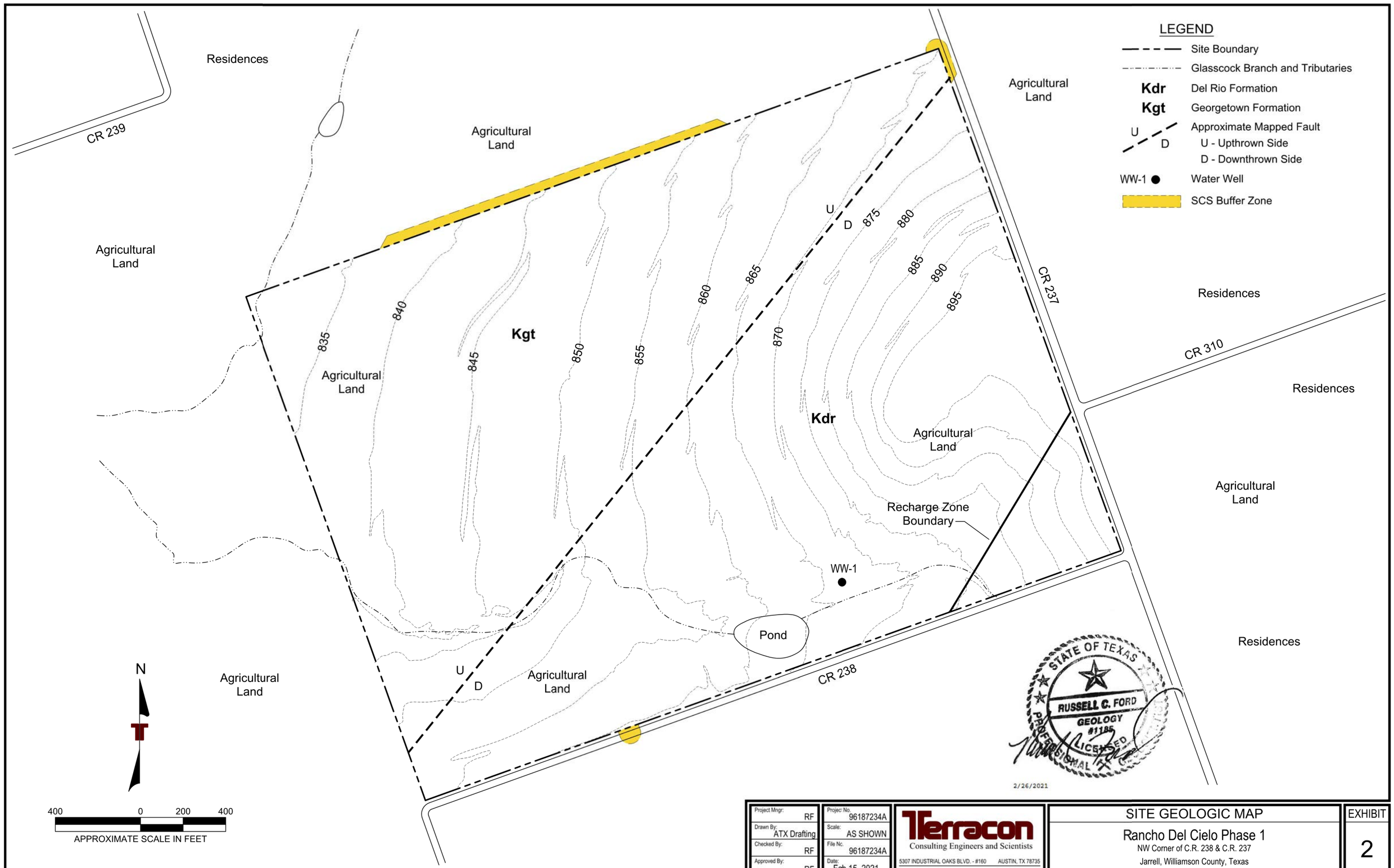

Project Mngr: RF	Projec No.: 96187234A	Terracon Consulting Engineers and Scientists	SITE GEOLOGIC MAP
Drawn By: ATX Drafting	Scale: AS SHOWN	5307 INDUSTRIAL OAKS BLVD. - #160 AUSTIN, TX 78735	Rancho Del Cielo Phase 1
Checked By: RF	File No.: 96187234A	PH. (512) 442-1122 FAX (512) 442-1181	NW Corner of C.R. 238 & C.R. 237
Approved By: RF	Date: Feb 15, 2021		Jarrell, Williamson County, Texas

EXHIBIT 2

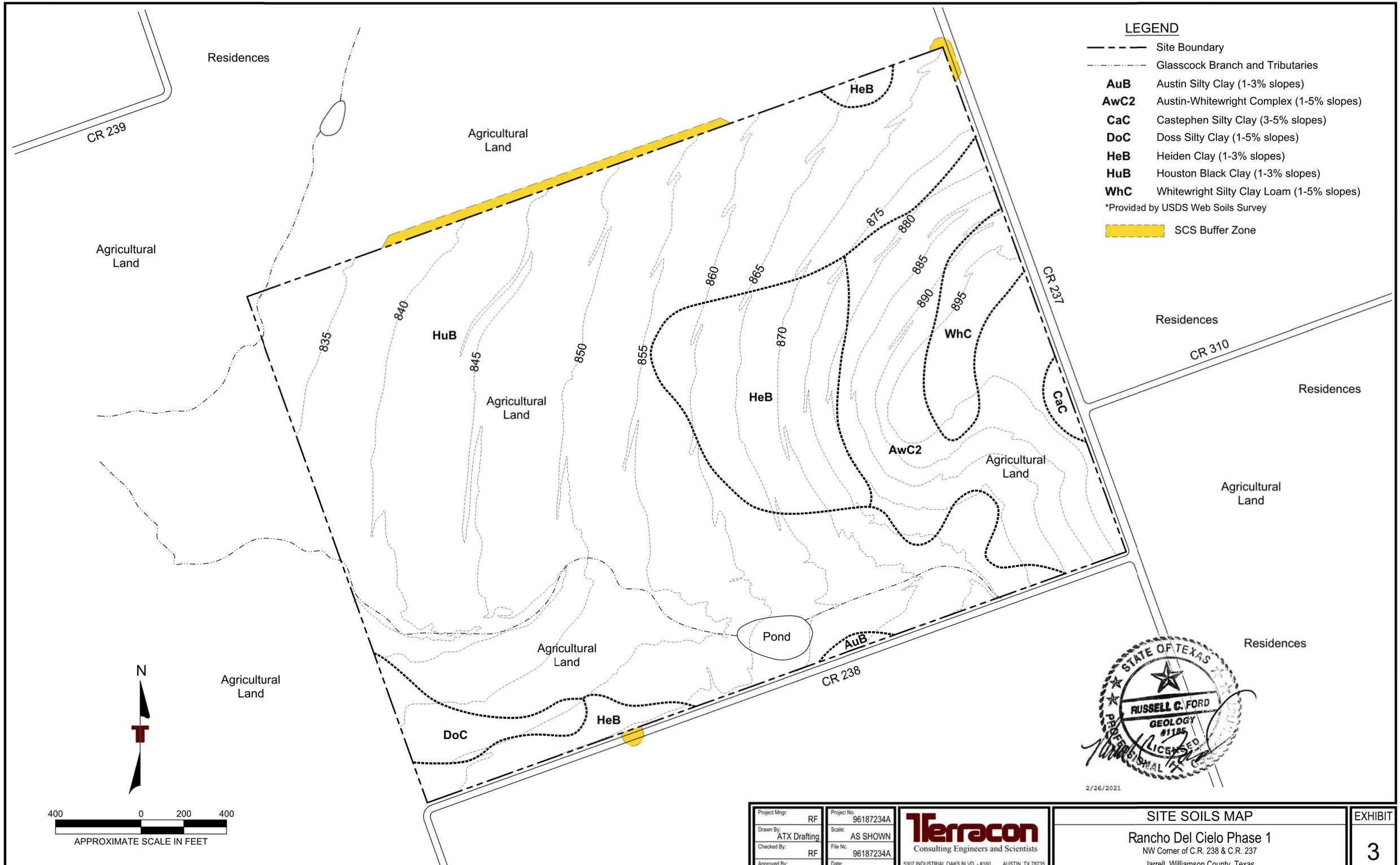

Project Mngr: RF	Projec No. 96187234A	Terracon Consulting Engineers and Scientists	SITE SOILS MAP
Drawn By: ATX Drafting	Scale: AS SHOWN	5307 INDUSTRIAL OAKS BLVD. - #160 AUSTIN, TX 78735	Rancho Del Cielo Phase 1
Checked By: RF	File No. 96187234A	PH. (512) 442-1122 FAX (512) 442-1181	NW Corner of C.R. 238 & C.R. 237
Approved By: RF	Date: Feb 15, 2021		Jarrell, Williamson County, Texas

EXHIBIT 3

MODIFICATION OF A PREVIOUSLY APPROVED PLAN

Modification of a Previously Approved Plan

Texas Commission on Environmental Quality

for Regulated Activities on the Edwards Aquifer Recharge Zone and Transition Zone and Relating to 30 TAC 213.4(j), Effective June 1, 1999

To ensure that the application is administratively complete, confirm that all fields in the form are complete, verify that all requested information is provided, consistently reference the same site and contact person in all forms in the application, and ensure forms are signed by the appropriate party.

Note: Including all the information requested in the form and attachments contributes to more streamlined technical reviews.

Signature

To the best of my knowledge, the responses to this form accurately reflect all information requested concerning the proposed regulated activities and methods to protect the Edwards Aquifer. This request for a **Modification of a Previously Approved Plan** is hereby submitted for TCEQ review and executive director approval. The request was prepared by:

Print Name of Customer/Agent: Michael Fisher, P.E.

Date: 10/9/24

Signature of Customer/Agent:



Project Information

1. Current Regulated Entity Name: Rancho Del Cielo Phase 4B
   Original Regulated Entity Name: Rancho Del Cielo Phase 2
   Regulated Entity Number(s) (RN): 111188447
   Edwards Aquifer Protection Program ID Number(s): 11003130
   ☒ The applicant has not changed and the Customer Number (CN) is: 602412207
   ☐ The applicant or Regulated Entity has changed. A new Core Data Form has been provided.

2. ☒ **Attachment A: Original Approval Letter and Approved Modification Letters.** A copy of the original approval letter and copies of any modification approval letters are attached.

3. A modification of a previously approved plan is requested for (check all that apply):
   - ☐ Physical or operational modification of any water pollution abatement structure(s) including but not limited to ponds, dams, berms, sewage treatment plants, and diversionary structures;
   - ☐ Change in the nature or character of the regulated activity from that which was originally approved or a change which would significantly impact the ability of the plan to prevent pollution of the Edwards Aquifer;
   - ☒ Development of land previously identified as undeveloped in the original water pollution abatement plan;
   - ☐ Physical modification of the approved organized sewage collection system;
   - ☐ Physical modification of the approved underground storage tank system;
   - ☐ Physical modification of the approved aboveground storage tank system.

4. ☒ Summary of Proposed Modifications (select plan type being modified). If the approved plan has been modified more than once, copy the appropriate table below, as necessary, and complete the information for each additional modification.

WPAP Modification Summary	***Approved Project***	***Proposed Modification***
Acres	Phase 2 limits = 70.53	Phase 4B limits = 10.16
Type of Development	Residential	Residental
Number of Residential Lots	329	20
Impervious Cover (acres)	26.96	0.98
Impervious Cover (%	38.22%	9.65%
Permanent BMPs	One (1) batch detention pond, four (4) 15' VFS	One (1) batch detention pond, seven (7) 15' VFS
Other	N/A	N/A
_____		

SCS Modification Summary	***Approved Project***	***Proposed Modification***
Linear Feet	_____	_____
Pipe Diameter	_____	_____
Other	_____	_____

AST Modification Summary	***Approved Project***	***Proposed Modification***
Number of ASTs	_____	_____
Volume of ASTs	_____	_____
Other	_____	_____

UST Modification Summary	***Approved Project***	***Proposed Modification***
Number of USTs	_____	_____
Volume of USTs	_____	_____
Other	_____	_____

5. ☒ **Attachment B: Narrative of Proposed Modification**. A detailed narrative description of the nature of the proposed modification is attached. It discusses what was approved, including any previous modifications, and how this proposed modification will change the approved plan.

6. ☒ **Attachment C: Current Site Plan of the Approved Project**. A current site plan showing the existing site development (i.e., current site layout) at the time this application for modification is attached. A site plan detailing the changes proposed in the submitted modification is required elsewhere.
   - ☐ The approved construction has not commenced. The original approval letter and any subsequent modification approval letters are included as Attachment A to document that the approval has not expired.
   - ☐ The approved construction has commenced and has been completed. Attachment C illustrates that the site was constructed as approved.
   - ☐ The approved construction has commenced and has been completed. Attachment C illustrates that the site was **not** constructed as approved.
   - ☒ The approved construction has commenced and has **not** been completed. Attachment C illustrates that, thus far, the site was constructed as approved.
   - ☐ The approved construction has commenced and has **not** been completed. Attachment C illustrates that, thus far, the site was **not** constructed as approved.

7. ☐ The acreage of the approved plan has increased. A Geologic Assessment has been provided for the new acreage.
   ☒ Acreage has not been added to or removed from the approved plan.

8. ☒ Submit one (1) original and one (1) copy of the application, plus additional copies as needed for each affected incorporated city, groundwater conservation district, and county in which the project will be located. The TCEQ will distribute the additional

copies to these jurisdictions. The copies must be submitted to the appropriate regional office.

ATTACHMENT A

Jon Niermann, *Chairman*
Emily Lindley, *Commissioner*
Bobby Janecka, *Commissioner*
Toby Baker, *Executive Director*

TEXAS COMMISSION ON ENVIRONMENTAL QUALITY

Protecting Texas by Reducing and Preventing Pollution

September 23, 2022

Mr. Thomas Anker
Lennar Homes of Texas Land and Construction, Ltd.
13620 N. FM 620 Rd., Bldg. B, Suite 150
Austin, Texas 78717-1116

Re: Edwards Aquifer, Williamson County

NAME OF PROJECT: Rancho Del Cielo Phase 2; Located Northwest of CR 237 and CR 238; Jarrell, Texas

TYPE OF PLAN: Request for Approval of a Water Pollution Abatement Plan (WPAP); 30 Texas Administrative Code (TAC) Chapter 213 Edwards Aquifer

Edwards Aquifer Protection Program ID No. 11003130; Regulated Entity No. RN111188447

Dear Mr. Anker:

The Texas Commission on Environmental Quality (TCEQ) has completed its review of the WPAP for the referenced project submitted to the Austin Regional Office by Pape-Dawson Engineers, Inc. on behalf of Lennar Homes of Texas Land and Construction, Ltd. on June 7, 2022. Final review was completed after additional material was received on August 26 and September 20, 2022. As presented to the TCEQ, the Temporary and Permanent Best Management Practices (BMPs) were selected and construction plans were prepared by a Texas Licensed Professional Engineer to be in general compliance with the requirements of 30 TAC Chapter 213. These planning materials were sealed, signed and dated by a Texas Licensed Professional Engineer. Therefore, based on the engineer's concurrence of compliance, the planning materials for construction of the proposed project and pollution abatement measures are hereby approved subject to applicable state rules and the conditions in this letter. The applicant or a person affected may file with the chief clerk a motion for reconsideration of the executive director's final action on this Edwards Aquifer Protection Plan. A motion for reconsideration must be filed no later than 23 days after the date of this approval letter. *This approval expires two (2) years from the date of this letter unless, prior to the expiration date, more than 10 percent of the construction has commenced on the project or an extension of time has been requested.*

BACKGROUND

The Rancho Del Cielo Phase 1 WPAP approved by letter dated May 24, 2021 (EAPP ID No. 11002378) included the construction of 215 single-family residential lots, roads and drives, utilities, two water quality basins (batch detentions Pond 1 and Pond 2B), six engineered vegetated filter strips (VFS), three interim natural VFS, and associated appurtenances for a total of 20.67 acres of impervious cover.

Both approved batch detentions were sized for future development. Pond 1 will have a water quality volume of 265,100 cubic feet (cf) and is designed to remove a total of 45,583 pounds of TSS. Pond 2B will have a water quality volume of 82,727 cubic feet (cf) and is designed to remove a total of 13,004 pounds of TSS.

PROJECT DESCRIPTION

The proposed single-family residential project is part of an overall 198.49-acre multiphase development and includes 77.32 acres, out of which 70.53 acres are located in the Edwards Aquifer Recharge Zone. It will include the development of 329 single-family residential lots, roads and drives, utilities, and associated appurtenances, five VFS, and a water quality basin (batch detention Pond 2A). The impervious cover will be 26.96 acres (38.22 percent). The wastewater generated by this project will be conveyed to the existing City of Jarrell Wastewater Treatment Plant for treatment and disposal.

PERMANENT POLLUTION ABATEMENT MEASURES

To prevent the pollution of stormwater runoff originating on-site or upgradient of the site and potentially flowing across and off the site after construction, five engineered vegetative filter strip systems, a proposed batch detention basin (Pond 2A) and two previously approved batch detention basins (Ponds 1 and 2B; EAPP ID No. 11002378) designed using the TCEQ technical guidance document, Complying with the Edwards Aquifer Rules: Technical Guidance on Best Management Practices (2005), will be constructed to treat stormwater runoff. The required total suspended solids (TSS) treatment for this project is 23,466 pounds of TSS generated from the 26.96 acres of impervious cover. The five proposed VFSs will remove a total of 1,827 pounds of TSS to treat stormwater runoff from a maximum of 2.1 acres of impervious cover. The approved and proposed water quality basins are sized for future development. The approved Pond 1 is designed to have a water quality volume of 265,100 cubic feet (cf) and to remove a total of 45,583 pounds of TSS. The approved Pond 2B is designed to have a water quality volume of 82,727 cubic feet (cf) and to remove a total of 13,004 pounds of TSS. The proposed batch detention Pond 2A is designed to have a water quality volume of 130,828 cf. The approved measures meet the required 80 percent removal of the increased load in TSS caused by the project.

GEOLOGY

According to the Geologic Assessment (GA) included with the application, no sensitive geologic features were observed at the site. The site is underlain by the Georgetown Formation (Kgt) and Del Rio Formation (Kdr) and is partially located in the Edwards Aquifer Recharge Zone. The TCEQ site assessment conducted on July 27, 2022, revealed the site to be generally as described by the GA.

SPECIAL CONDITIONS

I. All permanent pollution abatement measures shall be operational prior to occupancy of the houses.

II. All sediment and/or media removed from the water quality basins during maintenance activities shall be properly disposed of according to 30 TAC 330 or 30 TAC 335, as applicable.

STANDARD CONDITIONS

1. Pursuant to Chapter 7 Subchapter C of the Texas Water Code, any violations of the requirements in 30 TAC Chapter 213 may result in administrative penalties

2. The holder of the approved Edwards Aquifer protection plan must comply with all provisions of 30 TAC Chapter 213 and all best management practices and measures contained in the approved plan. Additional and separate approvals, permits, registrations and/or authorizations from other TCEQ Programs (i.e., Stormwater, Water Rights, UIC) can be required depending on the specifics of the plan.
3. In addition to the rules of the Commission, the applicant may also be required to comply with state and local ordinances and regulations providing for the protection of water quality.

Prior to Commencement of Construction:

4. Within 60 days of receiving written approval of an Edwards Aquifer Protection Plan, the applicant must submit to the Austin Regional Office, proof of recordation of notice in the county deed records, with the volume and page number(s) of the county deed records of the county in which the property is located. A description of the property boundaries shall be included in the deed recordation in the county deed records. A suggested form (Deed Recordation Affidavit, TCEQ-0625) that you may use to deed record the approved WPAP is enclosed.
5. All contractors conducting regulated activities at the referenced project location shall be provided a copy of this notice of approval. At least one complete copy of the approved WPAP and this notice of approval shall be maintained at the project location until all regulated activities are completed.
6. Modification to the activities described in the referenced WPAP application following the date of approval may require the submittal of a plan to modify this approval, including the payment of appropriate fees and all information necessary for its review and approval prior to initiating construction of the modifications.
7. The applicant must provide written notification of intent to commence construction, replacement, or rehabilitation of the referenced project. Notification must be submitted to the Austin Regional Office no later than 48 hours prior to commencement of the regulated activity. Written notification must include the date on which the regulated activity will commence, the name of the approved plan and program ID number for the regulated activity, and the name of the prime contractor with the name and telephone number of the contact person. The executive director will use the notification to determine if the approved plan is eligible for an extension.
8. Temporary erosion and sedimentation (E&S) controls, i.e., silt fences, rock berms, stabilized construction entrances, or other controls described in the approved WPAP, must be installed prior to construction and maintained during construction. Temporary E&S controls may be removed when vegetation is established and the construction area is stabilized. If a water quality pond is proposed, it shall be used as a sedimentation basin during construction. The TCEQ may monitor stormwater discharges from the site to evaluate the adequacy of temporary E&S control measures. Additional controls may be necessary if excessive solids are being discharged from the site.
9. All borings with depths greater than or equal to 20 feet must be plugged with non-shrink grout from the bottom of the hole to within three (3) feet of the surface. The remainder of the hole must be backfilled with cuttings from the boring. All borings less than 20 feet must be backfilled with cuttings from the boring. All borings must be backfilled or plugged within four (4) days of completion of the drilling operation. Voids may be filled with gravel.

During Construction:

10. During the course of regulated activities related to this project, the applicant or agent shall comply with all applicable provisions of 30 TAC Chapter 213, Edwards Aquifer. The applicant shall remain responsible for the provisions and conditions of this approval until such responsibility is legally transferred to another person or entity.

11. This approval does not authorize the installation of temporary aboveground storage tanks on this project. If the contractor desires to install a temporary aboveground storage tank for use during construction, an application to modify this approval must be submitted and approved prior to installation. The application must include information related to tank location and spill containment. Refer to Standard Condition No. 6, above.
12. If any sensitive feature (caves, solution cavities, sink holes, etc.) is discovered during construction, all regulated activities near the feature must be suspended immediately. The applicant or his agent must immediately notify the Austin Regional Office of the discovery of the feature. Regulated activities near the feature may not proceed until the executive director has reviewed and approved the methods proposed to protect the feature and the aquifer from potentially adverse impacts to water quality. The plan must be sealed, signed, and dated by a Texas Licensed Professional Engineer.
13. All water wells, including injection, dewatering, and monitoring wells must be in compliance with the requirements of the Texas Department of Licensing and Regulation under Title 16 TAC Chapter 76 (relating to Water Well Drillers and Pump Installers) and all other locally applicable rules, as appropriate.
14. If sediment escapes the construction site, the sediment must be removed at a frequency sufficient to minimize offsite impacts to water quality (e.g., fugitive sediment in street being washed into surface streams or sensitive features by the next rain). Sediment must be removed from sediment traps or sedimentation ponds not later than when design capacity has been reduced by 50 percent. Litter, construction debris, and construction chemicals shall be prevented from becoming stormwater discharge pollutants.
15. Intentional discharges of sediment laden water are not allowed. If dewatering becomes necessary, the discharge will be filtered through appropriately selected best management practices. These may include vegetated filter strips, sediment traps, rock berms, silt fence rings, etc.
16. The following records shall be maintained and made available to the executive director upon request: the dates when major grading activities occur, the dates when construction activities temporarily or permanently cease on a portion of the site, and the dates when stabilization measures are initiated.
17. Stabilization measures shall be initiated as soon as practicable in portions of the site where construction activities have temporarily or permanently ceased, and construction activities will not resume within 21 days. When the initiation of stabilization measures by the 14th day is precluded by weather conditions, stabilization measures shall be initiated as soon as practicable.

<u>After Completion of Construction:</u>

18. A Texas Licensed Professional Engineer must certify in writing that the permanent BMPs or measures were constructed as designed. The certification letter must be submitted to the Austin Regional Office within 30 days of site completion.
19. The applicant shall be responsible for maintaining the permanent BMPs after construction until such time as the maintenance obligation is either assumed in writing by another entity having ownership or control of the property (such as without limitation, an owner's association, a new property owner or lessee, a district, or municipality) or the ownership of the property is transferred to the entity. Such entity shall then be responsible for maintenance until another entity assumes such obligations in writing or ownership is transferred. A copy of the transfer of responsibility must be filed with the executive director through Austin Regional Office within 30 days of the transfer. A copy of the transfer form (TCEQ-10263) is enclosed.
20. Upon legal transfer of this property, the new owner(s) is required to comply with all terms of the approved Edwards Aquifer protection plan. If the new owner intends to commence any new regulated activity on the site, a new Edwards Aquifer protection plan that specifically addresses the new activity must be submitted to the executive director.

Approval of the plan for the new regulated activity by the executive director is required prior to commencement of the new regulated activity.

21. An Edwards Aquifer protection plan approval or extension will expire, and no extension will be granted if more than 50 percent of the total construction has not been completed within ten years from the initial approval of a plan. A new Edwards Aquifer protection plan must be submitted to the Austin Regional Office with the appropriate fees for review and approval by the executive director prior to commencing any additional regulated activities.
22. At project locations where construction is initiated and abandoned, or not completed, the site shall be returned to a condition such that the aquifer is protected from potential contamination.

This action is taken under authority delegated by the Executive Director of the Texas Commission on Environmental Quality. If you have any questions or require additional information, please contact Mihaela (Miki) Chilarescu, P.E. of the Edwards Aquifer Protection Program of the Austin Regional Office at (512) 339-2929.

Sincerely,

Lillian Butler

Lillian Butler, Section Manager
Edwards Aquifer Protection Program
Texas Commission on Environmental Quality

LIB/mec

Enclosure: Deed Recordation Affidavit, Form TCEQ-0625
Change in Responsibility for Maintenance of Permanent BMPs, Form TCEQ-10263

CC: Ms. Jennifer C. Franklin, P.E., Pape-Dawson Engineers, Inc.

ATTACHMENT B

RANCHO DEL CIELO PHASE 4B
Water Pollution Abatement Plan Modification Application

NARRATIVE OF PROPOSED MODIFICATION

The Texas Commission of Environmental Quality approved the Rancho Del Cielo Phase 2 (EAPP IS No. 11003130) on September 23, 2022. The approved WPAP has a total site area of 189.77 acres, with a Phase 2 project limits located partially over the EARZ (the WPAP Phase 2 project limits) of approximately 70.53 acres and includes 329 lots with associated driveways and streets which make up Phase 2 of the residential development. It also includes clearing, grading, excavation, installation of utilities and drainage improvements. The approved proposed impervious cover is 26.29 acres. One (1) batch detention pond (Pond 2A) with earthen side-slopes at 3:1 and maintenance access at 4:1 slopes, two (2) existing batch detention ponds (Ponds 1 and 2B) with earthen side-slopes at 3:1 and maintenance access at 4:1 slopes, five (5) new fifteen-foot (15') wide Engineered Vegetated Filter Strips (VFS), and four (4) existing fifteen-foot (15') wide Engineered Vegetated Filter Strips (VFS) were approved as the Permanent Best Management Practices (PMPS) for this site.

This WPAP Modification revises the proposed landplan for the southern portion of the Phase 2 development from 17 residential units with access via a slip drive, to 20 single-family homes and two cul-de-sac roadways. This WPAP modification application includes clearing, grading, excavation, installation of utilities and drainage improvements, streets, and 20 homes with associated driveways. Total impervious cover within the phase 4B project limits is 0.98 acres. The land plan change reduces the total permitted Phase 2 impervious cover by 0.39 acres from 29.96 acres to 29.57 acres of impervious cover. The location of 15' Engineered VFS to treat homes within the Phase 4B project area has also been revised to accommodate the proposed landplan changes. One (1) fifteen-foot (15') wide Engineered Vegetative Filter strip (VFS '10') is no longer proposed and four (4) new fifteen-foot (15') wide Engineered Vegetative Filter Strips (VFS '11-14') are proposed to provide treatment for the 20 single-family Phase 4B homes. The four (4) 15' Engineered Vegetative Filter Strips provide direct treatment for approximately 0.33 acres of new proposed impervious cover in the Rancho del Cielo Phase 4B project limits. The total amount of overtreatment provided by batch detention pond (Pond 2A) is proposed to increase with this WPAP Modification (from 1.17 acres to 1.27 acres). Overtreatment provided in batch detention Pond 2A for impervious cover associated with Phase 4B consists of approximately 0.65 acres.

All PBMPs have been designed in accordance with the TCEQ's Technical Guidance Manual (TGM) RG-348 (2005) to remove 80% of the increase in TSS from the site. Both Detention Ponds '2A' and the four (4) VFS have been designed to treat stormwater runoff at ultimate development within the Rancho del Cielo subdivision, and water quality calculations have been provided with this application for the proposed Rancho del Cielo Phase 4B development. Please see the Treatment Summary Table provided with the attached construction plan sheets for more detail.

WPAP APPLICATION

Water Pollution Abatement Plan Application

Texas Commission on Environmental Quality

for Regulated Activities on the Edwards Aquifer Recharge Zone and Relating to 30 TAC §213.5(b), Effective June 1, 1999

To ensure that the application is administratively complete, confirm that all fields in the form are complete, verify that all requested information is provided, consistently reference the same site and contact person in all forms in the application, and ensure forms are signed by the appropriate party.

Note: Including all the information requested in the form and attachments contributes to more streamlined technical reviews.

Signature

To the best of my knowledge, the responses to this form accurately reflect all information requested concerning the proposed regulated activities and methods to protect the Edwards Aquifer. This **Water Pollution Abatement Plan Application Form** is hereby submitted for TCEQ review and Executive Director approval. The form was prepared by:

Print Name of Customer/Agent: Michael Fisher, P.E.

Date: 10/9/24

Signature of Customer/Agent:



Regulated Entity Name: Rancho Del Cielo Phase 4B

Regulated Entity Information

1. The type of project is:

   ☒ Residential: Number of Lots:20
   ☐ Residential: Number of Living Unit Equivalents:_____
   ☐ Commercial
   ☐ Industrial
   ☐ Other:_____

2. Total site acreage (size of property):198.49

3. Estimated projected population:60

4. The amount and type of impervious cover expected after construction are shown below:

Table 1 - Impervious Cover Table

Impervious Cover of Proposed Project	Sq. Ft.	Sq. Ft./Acre	Acres
Structures/Rooftops	18,525	÷ 43,560 =	.43
Parking	0	÷ 43,560 =	
Other paved surfaces	24,164	÷ 43,560 =	.55
Total Impervious Cover	42,689	÷ 43,560 =	0.98

Total Impervious Cover 0.98 **÷ Total Acreage** 10.16 (Phase 4B WPAP project limits) **X 100 =** 9.65**% Impervious Cover**

5. ☒ **Attachment A - Factors Affecting Surface Water Quality**. A detailed description of all factors that could affect surface water and groundwater quality that addresses ultimate land use is attached.

6. ☒ Only inert materials as defined by 30 TAC §330.2 will be used as fill material.

For Road Projects Only

Complete questions 7 - 12 if this application is exclusively for a road project.

7. Type of project:

   ☐ TXDOT road project.
   ☐ County road or roads built to county specifications.
   ☐ City thoroughfare or roads to be dedicated to a municipality.
   ☐ Street or road providing access to private driveways.

8. Type of pavement or road surface to be used:

   ☐ Concrete
   ☐ Asphaltic concrete pavement
   ☐ Other: _____

9. Length of Right of Way (R.O.W.): _____ feet.

   Width of R.O.W.: _____ feet.
   L x W = _____ Ft^2 ÷ 43,560 Ft^2/Acre = _____ acres.

10. Length of pavement area: _____ feet.

    Width of pavement area: _____ feet.
    L x W = _____ Ft^2 ÷ 43,560 Ft^2/Acre = _____ acres.
    Pavement area _____ acres ÷ R.O.W. area _____ acres x 100 = _____% impervious cover.

11. ☐ A rest stop will be included in this project.

    ☐ A rest stop will not be included in this project.

12. ☐ Maintenance and repair of existing roadways that do not require approval from the TCEQ Executive Director. Modifications to existing roadways such as widening roads/adding shoulders totaling more than one-half (1/2) the width of one (1) existing lane require prior approval from the TCEQ.

Stormwater to be generated by the Proposed Project

13. ☒ **Attachment B - Volume and Character of Stormwater**. A detailed description of the volume (quantity) and character (quality) of the stormwater runoff which is expected to occur from the proposed project is attached. The estimates of stormwater runoff quality and quantity are based on the area and type of impervious cover. Include the runoff coefficient of the site for both pre-construction and post-construction conditions.

Wastewater to be generated by the Proposed Project

14. The character and volume of wastewater is shown below:

100 % Domestic	4,200 Gallons/day
_____ % Industrial	_____ Gallons/day
_____ % Commingled	_____ Gallons/day

TOTAL gallons/day 4,200

15. Wastewater will be disposed of by:

☐ On-Site Sewage Facility (OSSF/Septic Tank):

☐ **Attachment C - Suitability Letter from Authorized Agent**. An on-site sewage facility will be used to treat and dispose of the wastewater from this site. The appropriate licensing authority's (authorized agent) written approval is attached. It states that the land is suitable for the use of private sewage facilities and will meet or exceed the requirements for on-site sewage facilities as specified under 30 TAC Chapter 285 relating to On-site Sewage Facilities.

☐ Each lot in this project/development is at least one (1) acre (43,560 square feet) in size. The system will be designed by a licensed professional engineer or registered sanitarian and installed by a licensed installer in compliance with 30 TAC Chapter 285.

☒ Sewage Collection System (Sewer Lines):

☐ Private service laterals from the wastewater generating facilities will be connected to an existing SCS.

☒ Private service laterals from the wastewater generating facilities will be connected to a proposed SCS.

☐ The SCS was previously submitted on_____.

☒ The SCS was submitted with this application.

☐ The SCS will be submitted at a later date. The owner is aware that the SCS may not be installed prior to Executive Director approval.

☒ The sewage collection system will convey the wastewater to the Donahoe Creek (City of Jarrell) Wastewater (name) Treatment Plant. The treatment facility is:

☒ Existing.
☐ Proposed.

16. ☒ All private service laterals will be inspected as required in 30 TAC §213.5.

Site Plan Requirements

Items 17 – 28 must be included on the Site Plan.

17. ☒ The Site Plan must have a minimum scale of 1" = 400'.

Site Plan Scale: 1" = 400'.

18. 100-year floodplain boundaries:

☒ Some part(s) of the project site is located within the 100-year floodplain. The floodplain is shown and labeled.
☐ No part of the project site is located within the 100-year floodplain.
The 100-year floodplain boundaries are based on the following specific (including date of material) sources(s): Federal Emergency Management Administration Flood Hazard Boundary Map, Community Panel No. 48491C0125F, effective date December 20, 2019.

19. ☒ The layout of the development is shown with existing and finished contours at appropriate, but not greater than ten-foot contour intervals. Lots, recreation centers, buildings, roads, open space, etc. are shown on the plan.

☐ The layout of the development is shown with existing contours at appropriate, but not greater than ten-foot intervals. Finished topographic contours will not differ from the existing topographic configuration and are not shown. Lots, recreation centers, buildings, roads, open space, etc. are shown on the site plan.

20. All known wells (oil, water, unplugged, capped and/or abandoned, test holes, etc.):

☒ There are one (#) wells present on the project site and the locations are shown and labeled. (Check all of the following that apply)

☐ The wells are not in use and have been properly abandoned.
☒ The wells are not in use and will be properly abandoned.
☐ The wells are in use and comply with 16 TAC §76.

☐ There are no wells or test holes of any kind known to exist on the project site.

21. Geologic or manmade features which are on the site:

☐ All sensitive geologic or manmade features identified in the Geologic Assessment are shown and labeled.
☒ No sensitive geologic or manmade features were identified in the Geologic Assessment.

☐ **Attachment D - Exception to the Required Geologic Assessment**. A request and justification for an exception to a portion of the Geologic Assessment is attached.

22. ☒ The drainage patterns and approximate slopes anticipated after major grading activities.
23. ☒ Areas of soil disturbance and areas which will not be disturbed.
24. ☒ Locations of major structural and nonstructural controls. These are the temporary and permanent best management practices.
25. ☒ Locations where soil stabilization practices are expected to occur.
26. ☒ Surface waters (including wetlands).

    ☐ N/A
27. ☒ Locations where stormwater discharges to surface water or sensitive features are to occur.

    ☐ There will be no discharges to surface water or sensitive features.
28. ☒ Legal boundaries of the site are shown.

Administrative Information

29. ☒ Submit one (1) original and one (1) copy of the application, plus additional copies as needed for each affected incorporated city, groundwater conservation district, and county in which the project will be located. The TCEQ will distribute the additional copies to these jurisdictions. The copies must be submitted to the appropriate regional office.
30. ☒ Any modification of this WPAP will require Executive Director approval, prior to construction, and may require submission of a revised application, with appropriate fees.

ATTACHMENT A

FACTORS AFFECTING WATER QUALITY

Potential sources of pollution that may reasonably be expected to affect the quality of storm water discharges from the site during construction include:

- Soil erosion due to the clearing of the site;
- Oil, grease, fuel and hydraulic fluid contamination from construction equipment and vehicle drippings;
- Hydrocarbons from asphalt paving operations;
- Miscellaneous trash and litter from construction workers and material wrappings;
- Concrete truck washout; and
- Potential overflow/spills from portable toilets.

Potential sources of pollution that may reasonably be expected to affect the quality of storm water discharges from the site after development include:

- Oil, grease, fuel and hydraulic fluid contamination from vehicle drippings;
- Dirt and dust which may fall off vehicles; and
- Miscellaneous trash and litter.

ATTACHMENT B

VOLUME AND CHARACTER OF STORMWATER

Rancho Del Cielo Phase 4B contributes runoff through two (2) routing points at existing low areas at the western edge of the site. This runoff is ultimately conveyed to the Glasscock Branch of Dry Berry Creek downstream of the development. The specific routing points are designated as 'Outlet 1' and 'Outlet 2', as shown on Sheet 14 of 36 of the construction plans. The 100-year pre-developed runoff coefficient for contributing watersheds to 'Outlet 1' and 'Outlet 2' is 0.47, as determined based on the Rational Method runoff coefficients per the City of Austin Drainage Criteria Manual. The 100-year pre-developed peak flow at 'Outlet 1' is approximately 580 cubic feet per second (cfs), and the 100-year pre-developed peak flow at 'Outlet 2' is approximately 1,476 cfs. The Rancho Del Cielo Phase 4B post-development peak flow is approximately 1429 cfs at 'Outlet 2'. The 100-year post-developed runoff coefficients for contributing watersheds to 'Outlet 1' and 'Outlet 2' are 0.73 and 0.53, respectively, as determined based on the Rational Method runoff coefficients per the City of Austin Drainage Criteria Manual. Peak flowrates for pre-development and post-development conditions were determined using the Soil Conservation Service (SCS) Method. In accordance with the City of Austin Drainage Criteria Manual, an SCS 24-hour storm duration with a Type III distribution and City of Austin rainfall depths were utilized to determine the pre-development and post-development conditions peak runoff flows. Stormwater runoff from the proposed single-family residential development can be characterized as overland, shallow-concentrated and channelized flow.

SITE PLAN

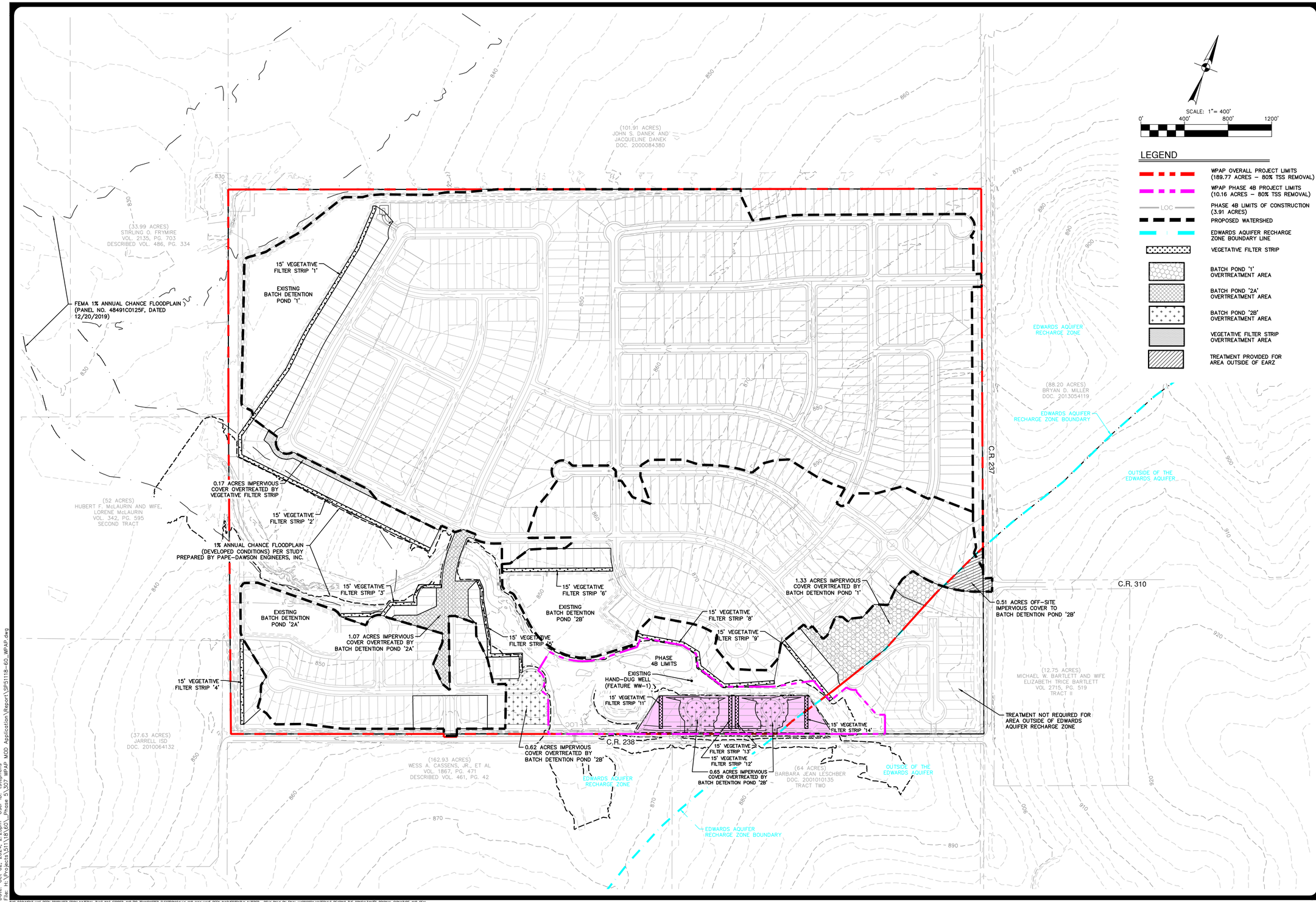

NO.	REVISION	DATE

PAPE-DAWSON ENGINEERS

AUSTIN I SAN ANTONIO I HOUSTON I FORT WORTH I DALLAS
10801 N MOPAC EXPY, BLDG 3, STE 200 I AUSTIN, TX 78759 I 512.454.8711
TBPE FIRM REGISTRATION #470 I TBPLS FIRM REGISTRATION #10028801

RANCHO DEL CIELO - PHASE 4B
WILLIAMSON COUNTY, TEXAS

WPAP SITE PLAN EXHIBIT

CITY JOB No.
JOB NO. 51118-61
DATE SEPTEMBER 2024
DESIGNER TS
CHECKED DRAWN CE/JM
SHEET 1 OF 1

Date: Oct 02, 2024, 2:25pm User ID: tstephens
File: H:\Projects\511\18\60_Phase 5\307 WPAP MOD Application\Report\SP51118-60_WPAP.dwg

THIS DOCUMENT HAS BEEN PRODUCED FROM MATERIAL THAT WAS STORED AND/OR TRANSMITTED ELECTRONICALLY AND MAY HAVE BEEN INADVERTENTLY ALTERED. RELY ONLY ON FINAL HARDCOPY MATERIALS BEARING THE CONSULTANT'S ORIGINAL SIGNATURE AND SEAL.

TEMPORARY STORMWATER

Temporary Stormwater Section

Texas Commission on Environmental Quality

for Regulated Activities on the Edwards Aquifer Recharge Zone and Relating to 30 TAC §213.5(b)(4)(A), (B), (D)(I) and (G); Effective June 1, 1999

To ensure that the application is administratively complete, confirm that all fields in the form are complete, verify that all requested information is provided, consistently reference the same site and contact person in all forms in the application, and ensure forms are signed by the appropriate party.

Note: Including all the information requested in the form and attachments contributes to more streamlined technical reviews.

Signature

To the best of my knowledge, the responses to this form accurately reflect all information requested concerning the proposed regulated activities and methods to protect the Edwards Aquifer. This **Temporary Stormwater Section** is hereby submitted for TCEQ review and executive director approval. The application was prepared by:

Print Name of Customer/Agent: Michael Fisher, P.E.

Date: 10/9/24

Signature of Customer/Agent:



Regulated Entity Name: Rancho Del Cielo Phase 4B

Project Information

Potential Sources of Contamination

Examples: Fuel storage and use, chemical storage and use, use of asphaltic products, construction vehicles tracking onto public roads, and existing solid waste.

1. Fuels for construction equipment and hazardous substances which will be used during construction:

   ☒ The following fuels and/or hazardous substances will be stored on the site: Diesel Fuel, Gasoline, etc.

   These fuels and/or hazardous substances will be stored in:

   ☒ Aboveground storage tanks with a cumulative storage capacity of less than 250 gallons will be stored on the site for less than one (1) year.

☐ Aboveground storage tanks with a cumulative storage capacity between 250 gallons and 499 gallons will be stored on the site for less than one (1) year.

☐ Aboveground storage tanks with a cumulative storage capacity of 500 gallons or more will be stored on the site. An Aboveground Storage Tank Facility Plan application must be submitted to the appropriate regional office of the TCEQ prior to moving the tanks onto the project.

☐ Fuels and hazardous substances will not be stored on the site.

2. ☒ **Attachment A - Spill Response Actions**. A site specific description of the measures to be taken to contain any spill of hydrocarbons or hazardous substances is attached.

3. ☒ Temporary aboveground storage tank systems of 250 gallons or more cumulative storage capacity must be located a minimum horizontal distance of 150 feet from any domestic, industrial, irrigation, or public water supply well, or other sensitive feature.

4. ☒ **Attachment B - Potential Sources of Contamination**. A description of any activities or processes which may be a potential source of contamination affecting surface water quality is attached.

Sequence of Construction

5. ☒ **Attachment C - Sequence of Major Activities**. A description of the sequence of major activities which will disturb soils for major portions of the site (grubbing, excavation, grading, utilities, and infrastructure installation) is attached.

   ☒ For each activity described, an estimate (in acres) of the total area of the site to be disturbed by each activity is given.

   ☒ For each activity described, include a description of appropriate temporary control measures and the general timing (or sequence) during the construction process that the measures will be implemented.

6. ☒ Name the receiving water(s) at or near the site which will be disturbed or which will receive discharges from disturbed areas of the project: Glasscock Branch

Temporary Best Management Practices (TBMPs)

Erosion control examples: tree protection, interceptor swales, level spreaders, outlet stabilization, blankets or matting, mulch, and sod. Sediment control examples: stabilized construction exit, silt fence, filter dikes, rock berms, buffer strips, sediment traps, and sediment basins. Please refer to the Technical Guidance Manual for guidelines and specifications. All structural BMPs must be shown on the site plan.

7. ☒ **Attachment D – Temporary Best Management Practices and Measures**. TBMPs and measures will prevent pollution of surface water, groundwater, and stormwater. The construction-phase BMPs for erosion and sediment controls have been designed to retain sediment on site to the extent practicable. The following information is attached:

☒ A description of how BMPs and measures will prevent pollution of surface water, groundwater or stormwater that originates upgradient from the site and flows across the site.

☒ A description of how BMPs and measures will prevent pollution of surface water or groundwater that originates on-site or flows off site, including pollution caused by contaminated stormwater runoff from the site.

☒ A description of how BMPs and measures will prevent pollutants from entering surface streams, sensitive features, or the aquifer.

☒ A description of how, to the maximum extent practicable, BMPs and measures will maintain flow to naturally-occurring sensitive features identified in either the geologic assessment, TCEQ inspections, or during excavation, blasting, or construction.

8. ☒ The temporary sealing of a naturally-occurring sensitive feature which accepts recharge to the Edwards Aquifer as a temporary pollution abatement measure during active construction should be avoided.

☐ **Attachment E - Request to Temporarily Seal a Feature**. A request to temporarily seal a feature is attached. The request includes justification as to why no reasonable and practicable alternative exists for each feature.

☒ There will be no temporary sealing of naturally-occurring sensitive features on the site.

9. ☒ **Attachment F - Structural Practices**. A description of the structural practices that will be used to divert flows away from exposed soils, to store flows, or to otherwise limit runoff discharge of pollutants from exposed areas of the site is attached. Placement of structural practices in floodplains has been avoided.

10. ☒ **Attachment G - Drainage Area Map**. A drainage area map supporting the following requirements is attached:

☐ For areas that will have more than 10 acres within a common drainage area disturbed at one time, a sediment basin will be provided.

☐ For areas that will have more than 10 acres within a common drainage area disturbed at one time, a smaller sediment basin and/or sediment trap(s) will be used.

☐ For areas that will have more than 10 acres within a common drainage area disturbed at one time, a sediment basin or other equivalent controls are not attainable, but other TBMPs and measures will be used in combination to protect down slope and side slope boundaries of the construction area.

☐ There are no areas greater than 10 acres within a common drainage area that will be disturbed at one time. A smaller sediment basin and/or sediment trap(s) will be used in combination with other erosion and sediment controls within each disturbed drainage area.

☐ There are no areas greater than 10 acres within a common drainage area that will be disturbed at one time. Erosion and sediment controls other than sediment basins or sediment traps within each disturbed drainage area will be used.

11. ☐ **Attachment H - Temporary Sediment Pond(s) Plans and Calculations**. Temporary sediment pond or basin construction plans and design calculations for a proposed temporary BMP or measure have been prepared by or under the direct supervision of a Texas Licensed Professional Engineer. All construction plans and design information must be signed, sealed, and dated by the Texas Licensed Professional Engineer. Construction plans for the proposed temporary BMPs and measures are attached.

☒ N/A

12. ☒ **Attachment I - Inspection and Maintenance for BMPs.** A plan for the inspection of each temporary BMP(s) and measure(s) and for their timely maintenance, repairs, and, if necessary, retrofit is attached. A description of the documentation procedures, recordkeeping practices, and inspection frequency are included in the plan and are specific to the site and/or BMP.

13. ☒ All control measures must be properly selected, installed, and maintained in accordance with the manufacturer's specifications and good engineering practices. If periodic inspections by the applicant or the executive director, or other information indicate a control has been used inappropriately, or incorrectly, the applicant must replace or modify the control for site situations.

14. ☒ If sediment escapes the construction site, off-site accumulations of sediment must be removed at a frequency sufficient to minimize offsite impacts to water quality (e.g., fugitive sediment in street being washed into surface streams or sensitive features by the next rain).

15. ☒ Sediment must be removed from sediment traps or sedimentation ponds not later than when design capacity has been reduced by 50%. A permanent stake will be provided that can indicate when the sediment occupies 50% of the basin volume.

16. ☒ Litter, construction debris, and construction chemicals exposed to stormwater shall be prevented from becoming a pollutant source for stormwater discharges (e.g., screening outfalls, picked up daily).

Soil Stabilization Practices

Examples: establishment of temporary vegetation, establishment of permanent vegetation, mulching, geotextiles, sod stabilization, vegetative buffer strips, protection of trees, or preservation of mature vegetation.

17. ☒ **Attachment J - Schedule of Interim and Permanent Soil Stabilization Practices**. A schedule of the interim and permanent soil stabilization practices for the site is attached.

18. ☒ Records must be kept at the site of the dates when major grading activities occur, the dates when construction activities temporarily or permanently cease on a portion of the site, and the dates when stabilization measures are initiated.

19. ☒ Stabilization practices must be initiated as soon as practicable where construction activities have temporarily or permanently ceased.

Administrative Information

20. ☒ All structural controls will be inspected and maintained according to the submitted and approved operation and maintenance plan for the project.

21. ☒ If any geologic or manmade features, such as caves, faults, sinkholes, etc., are discovered, all regulated activities near the feature will be immediately suspended. The appropriate TCEQ Regional Office shall be immediately notified. Regulated activities must cease and not continue until the TCEQ has reviewed and approved the methods proposed to protect the aquifer from any adverse impacts.

22. ☒ Silt fences, diversion berms, and other temporary erosion and sediment controls will be constructed and maintained as appropriate to prevent pollutants from entering sensitive features discovered during construction.

ATTACHMENT A

Spill Response Actions

In the event of an accidental leak or spill:

- Spill must be contained and cleaned up immediately.
- Spills will not be merely buried or washed with water.
- Contractor shall take action to contain spill. Contractor may use sand or other absorbent material stockpiled on site to absorb spill. Absorbent material should be spread over the spill area to absorb the spilled product.
- In the event of an uncontained discharge the contractor shall utilize onsite equipment to construct berms downgradient of the spill with sand or other absorbent material to contain and absorb the spilled product.
- Spill containment/absorbent materials along with impacted media must be collected and stored in such a way so as not to continue to affect additional media (soil/water). Once the spill has been contained, collected material should be placed on poly or plastic sheeting until removed from the site. The impacted media and cleanup materials should be covered with plastic sheeting and the edges weighed down with paving bricks or other similarly dense objects as the material is being accumulated. This will prevent the impacted media and cleanup materials from becoming airborne in windy conditions or impacting runoff during a rain event. The stockpiled materials should not be located within an area of concentrated runoff such as along a curb line or within a swale.
- Contaminated soils and cleanup materials will be sampled for waste characterization. When the analysis results are known the contaminated soils and cleanup materials will be removed from the site and disposed in a permitted landfill in accordance with applicable regulations.
- The contractor will be required to notify the owner, who will in turn contact TCEQ to notify them in the event of a significant hazardous/reportable quantity spill. Additional notifications as required by the type and amount of spill will be conducted by owner or owner's representative.

In the event of an accidental significant or hazardous spill:

- The contractor will be required to report significant or hazardous spills in reportable quantities as soon as possible and within 24 hours to:
  - the National Response Center at (800) 424-8802
  - the TCEQ Regional Office (512) 339-2929 (if during business hours: 8 AM to 5 PM) or
  - the State Emergency Response Center (800) 832-8224 (if after hours)
- Reportable quantities can be found at the following link: https://www.tceq.texas.gov/response/spills/spill_rq.html

- Contaminated soils will be sampled for waste characterization. When the analysis results are known the contaminated soils will be removed from the site and disposed in a permitted landfill in accordance with applicable regulations.

Additional guidance can be obtained from TCEQ's Technical Guidance Manual (TGM) RG-348 (2005) Section 1.4.16. Contractor shall review this section.

ATTACHMENT B

POTENTIAL SOURCES OF CONTAMINATION

Potential Source
- Asphalt products used on this project.

Preventative Measure
- After placement of asphalt, emulsion or coatings, the contractor will be responsible for immediate cleanup should an unexpected rain occur. For the duration of the asphalt product curing time, the contractor will maintain standby personnel and equipment to contain any asphalt wash-off should an unexpected rain occur. The contractor will be instructed not to place asphalt products on the ground within 48 hours of a forecasted rain.

Potential Source
- Oil, grease, fuel and hydraulic fluid contamination from construction equipment and vehicle dripping.

Preventative Measure
- Vehicle maintenance when possible will be performed within the construction staging area.
- Construction vehicles and equipment shall be checked regularly for leaks and repaired immediately.

Potential Source
- Accidental leaks or spills of oil, petroleum products and substances listed under 40 CFR parts 110, 117, and 302 used or stored temporarily on site.

Preventative Measure
- Contractor to incorporate into regular safety meetings, a discussion of spill prevention and appropriate disposal procedures.

- Contractor's superintendent or representative overseer shall enforce proper spill prevention and control measures.
- Hazardous materials and wastes shall be stored in covered containers and protected from vandalism.
- A stockpile of spill cleanup materials shall be stored on site where it will be readily accessible.

Potential Source
- Miscellaneous trash and litter from construction workers and material wrappings.

Preventive Measure
- Trash containers will be placed throughout the site to encourage proper trash disposal.

Potential Source
- Construction debris.

Preventive Measure
- Construction debris will be monitored daily by contractor. Debris will be collected weekly and placed in disposal bins. Situations requiring immediate attention will be addressed on a case by case basis.

Potential Source
- Spills/Overflow of waste from portable toilets

Preventative Measure
- Portable toilets will be placed away from high traffic vehicular areas and storm drain inlets.
- Portable toilets will be placed on a level ground surface.
- Portable toilets will be inspected regularly for leaks and will be serviced and sanitized at time intervals that will maintain sanitary conditions.

ATTACHMENT C

SEQUENCE OF MAJOR ACTIVITIES

The sequence of major activities which disturb soil during construction on this site are listed below.

1) Set erosion controls – approximately 979LF of silt fence and 100 LF of rock berm
2) Clear and grub – approximately 3.91 acres
3) Rough grade roadway – approximately 0.50 acres
4) Rough grade lots – approximately 1.47 acres
5) Trench utilities – approximately 2,084 LF
6) Install water, wastewater, and storm – approximately 2,084 LF
7) Install sub base/base for road/parking areas – approximately 0.45 acres
8) Pave Roadway/Parking Area – approximately 0.36 acres
9) Site cleanup – approximately 3.91 acres
10) Remove erosion controls – approximately 979 LF of silt fence and 100 LF of rock berm

ATTACHMENT D

TEMPORARY BEST MANAGEMENT PRACTICES AND MEASURES

Please see the Erosion Control sheets included in the Construction Plans Section for TBMP layout and the responses below for more details.

Due to existing topography, upgradient stormwater from adjacent property along the southeastern edge of the site enters the Rancho Del Cielo property and flows from east to west along the southern edges of the Phase 1 project limits. As this upgradient area is currently undeveloped and undisturbed, sedimentation from off-site areas is not anticipated. All TBMPs utilized are adequate for the drainage areas served. No upgradient stormwater is anticipated to flow through or adjacent to the Phase 4B Project limits.

Site preparation, which is the initiation of all activity on the project, will disturb the largest amount of soil. Therefore, before any of this work can begin, the clearing and grading contractor will be responsible for the installation of all on-site control measures. The methodology for pollution prevention of on-site stormwater will include: (1) erection of silt fences along the downgradient boundary of construction activities for temporary erosion and sedimentation controls, (2) installation of rock berms downgradient from areas of concentrated stormwater flow for temporary erosion control, (3) installation of stabilized construction entrance/exit(s) to reduce the dispersion of sediment from the site, and (4) installation of construction staging area(s).

Prior to the initiation of construction, all previously installed control measures will be repaired or reestablished for their designed or intended purpose. This work, which is the remainder of all activities on the project, may also disturb additional soil. The construction contractor will be responsible for the installation of all remaining on-site control measures that includes installation of the concrete truck washout pit(s), as construction phasing warrants.

Temporary measures are intended to provide a method of slowing the flow of runoff from the construction site in order to allow sediment and suspended solids to settle out of the runoff. By containing the sediment and solids within the site, they will not enter the aquifer, surface streams and/or sensitive features that may exist downstream of the site.

Inlet protection will be installed and utilized to reduce the dispersion of sediment from entering the storm sewer system during construction activities.

Temporary measures are intended to provide a method of slowing the flow of runoff from the construction site in order to allow sediment and suspended solids to settle out of the runoff. By containing the sediment and solids within the site, they will not enter the aquifer, surface streams and/or sensitive features that may exist downstream of the site.

BMP measures utilized in this plan are intended to allow stormwater to continue downstream after passing through the BMPs. This will allow stormwater runoff to continue downgradient to streams or features that may exist downstream of the site. Features discovered during construction will be reported and assessed in accordance with applicable regulations.

ATTACHMENT F

STRUCTURAL PRACTICES

The following structural measures will be installed prior to the initiation of site preparation activities:

- Erection of silt fences along the downgradient boundary of construction activities and rock berms for secondary protection, as located on the Erosion Control sheets and illustrated on the Construction Details - Erosion Controls sheet.
- Installation of stabilized construction entrance/exit(s) and construction staging area(s), as located on the Erosion Control sheets and illustrated on the Construction Details - Erosion Controls sheet.

The following structural measures will be installed at the initiation of construction activities or as appropriate based on the construction sequencing:

- Installation of inlet protection, as required and located on the Erosion Control sheets and illustrated on the Construction Details - Erosion Controls sheet.
- Installation of concrete truck washout pit(s), as required and located on the Erosion Control sheets and illustrated on the Construction Details - Erosion Controls sheet.
- Installation of rock berm, as required and located on the Erosion Control sheets and illustrated on the Construction Details – Erosion Controls sheet.

ATTACHMENT I

INSPECTIONS & MAINTENANCE

Designated and qualified person(s) shall inspect Pollution Control Measures weekly and within 24 hours after a storm event. An inspection report that summarizes the scope of the inspection, names and qualifications of personnel conducting the inspection, date of the inspection, major observations, and actions taken as a result of the inspection will be recorded and maintained as part of Storm Water TPDES data for a period of three years after the Notice of Termination (NOT) has been filed. A copy of the Inspection Report Form is provided in this Storm Water Pollution Prevention Plan.

As a minimum, the inspector shall observe: (1) significant disturbed areas for evidence of erosion, (2) storage areas for evidence of leakage from the exposed stored materials, (3) structural controls (rock berm outlets, silt fences, drainage swales, etc.) for evidence of failure or excess siltation (over 6 inches deep), (4) vehicle exit point for evidence of off-site sediment tracking, (5) vehicle storage areas for signs of leaking equipment or spills, (6) concrete truck rinse-out pit for signs of potential failure, (7) embankment, spillways, and outlet of sediment basin (where applicable) for erosion damage, and (8) sediment basins (where applicable) for evidence that basin has accumulated 50% of its volume in silt. Deficiencies noted during the inspection will be corrected and documented within seven calendar days following the inspection or before the next anticipated storm event if practicable. Temporary sediment basins and permanent basins will be inspected until final stabilization of 70% within the basin watershed is achieved.

BMP inspection and maintenance requirements from sections 1.3 and 1.4 of TCEQ's Technical Guidance Manual are detailed below.

Temporary Construction Entrance/Exit

- The entrance should be maintained in a condition, which will prevent tracking or flowing of sediment onto public rights-of-way. This may require periodic top dressing with additional stone as conditions demand and repair and/or cleanout of any measures used to trap sediment.

- All sediment spilled, dropped, washed or tracked onto public rights-of-way should be removed immediately by contractor.
- When necessary, wheels should be cleaned to remove sediment prior to entrance onto public right-of-way.
- When washing is required, it should be done on an area stabilized with crushed stone that drains into an approved sediment trap or sediment basin.
- All sediment should be prevented from entering any storm drain, ditch or water course by using approved methods.

Silt Fence

- Inspect all fencing weekly, and after any rainfall.
- Remove sediment when buildup reaches 6 inches.
- Replace any torn fabric or install a second line of fencing parallel to the torn section.
- Replace or repair any sections crushed or collapsed in the course of construction activity. If a section of fence is obstructing vehicular access, consider relocating it to a spot where it will provide equal protection, but will not obstruct vehicles. A triangular filter dike may be preferable to a silt fence at common vehicle access points.
- When construction is complete, the sediment should be disposed of in a manner that will not cause additional siltation and the prior location of the silt fence should be revegetated. The fence itself should be disposed of in an approved landfill.

Rock Berms

- Inspection should be made weekly and after each rainfall by the responsible party. For installations in streambeds, additional daily inspections should be made.
- Remove sediment and other debris when buildup reaches 6 inches and dispose of the accumulated silt in an approved manner that will not cause any additional siltation.
- Repair any loose wire sheathing.
- The berm should be reshaped as needed during inspection.

- The berm should be replaced when the structure ceases to function as intended due to silt accumulation among the rocks, washout, construction traffic damage, etc.
- The rock berm should be left in place until all upstream areas are stabilized and accumulated silt removed.

Inlet Protection

- Inspection should be made weekly and after each rainfall. Repair or replacement should be made promptly as needed by the contractor.
- Remove sediment when buildup reaches a depth of 3 inches. Removed sediment should be deposited in a suitable area and in such a manner that it will not erode.
- Check placement of device to prevent gaps between device and curb.
- Inspect filter fabric and patch or replace if torn or missing.
- Structures should be removed and the area stabilized only after the remaining drainage area has been properly stabilized.

Pollution Prevention Measure	Inspected in Compliance	Corrective Action Required	
		Description (use additional sheet if necessary)	Date Completed
Best Management Practices			
Natural vegetation buffer strips			
Temporary vegetation			
Permanent vegetation			
Sediment control basin			
Silt fences			
Rock berms			
Gravel filter bags			
Drain inlet protection			
Other structural controls			
Vehicle exits (off-site tracking)			
Material storage areas (leakage)			
Equipment areas (leaks, spills)			
Concrete washout pit (leaks, failure)			
General site cleanliness			
Trash receptacles			
Evidence of Erosion			
Site preparation			
Roadway or parking lot construction			
Utility construction			
Drainage construction			
Building construction			
Major Observations			
Sediment discharges from site			
BMPs requiring maintenance			
BMPs requiring modification			
Additional BMPs required			

_____ A brief statement describing the qualifications of the inspector is included in this SWP3.

"I certify under penalty of law that this document and all attachments were prepared under my direction or supervision in accordance with a system designed to assure that qualified personnel properly gather and evaluate the information submitted. Based on my inquiry of the person or persons who manage the system, or those persons directly responsible for gathering the information, the information submitted is, to the best of my knowledge and belief, true, accurate, and complete. I am aware there are significant penalties for submitting false information, including the possibility of fine and imprisonment for knowing violations."

"I further certify I am an authorized signatory in accordance with the provisions of 30 TAC §305.128."

_____ _____ _____

Inspector's Name Inspector's Signature Date

PROJECT MILESTONE DATES

Date when major site grading activities begin:

Construction Activity	*Date*
Installation of BMPs	

Dates when construction activities temporarily or permanently cease on all or a portion of the project:

Construction Activity	Date

Dates when stabilization measures are initiated:

Stabilization Activity	Date
Removal of BMPs	

ATTACHMENT J

SCHEDULE OF INTERIM AND PERMANENT SOIL STABILIZATION PRACTICES

Interim on-site stabilization measures, which are continuous, will include minimizing soil disturbances by exposing the smallest practical area of land required for the shortest period of time and maximizing use of natural vegetation. As soon as practical, all disturbed soil will be stabilized via permanent revegetation. Details, such as installation, irrigation, and maintenance are provided below.

Installation:

- Final grading must be completed prior to seeding, minimizing all steep slopes. In addition, all necessary erosion structures such as dikes, swales, diversions, should also be installed.
- Seedbed should be well pulverized, loose, and uniform.
- Fertilizer should be applied at the rate of 40 pounds of nitrogen and 40 pounds of phosphorus per acre, which is equivalent to about 1.0 pounds of nitrogen and phosphorus per 1000 square feet. Compost can be used instead of fertilizer and applied at the same time as the seed.

Irrigation:

- Temporary irrigation should be provided according to the schedule described below, or to replace moisture loss to evapotranspiration (ET), whichever is greater. Significant rainfall (on-site rainfall of ½" or greater) may allow watering to be postponed until the next scheduled irrigation.

Time Period	Irrigation Amount and Frequency
Within 2 hours of installation	Irrigate entire root depth, or to germinate seed
During the next 10 business days	Irrigate entire root depth every Monday, Wednesday, and Friday
During the next 30 business days or until Substantial Completion	Irrigate entire root depth a minimum of once per week, or as necessary to ensure vigorous growth
During the next 4 months or until Final Acceptance of the Project	Irrigate entire root depth once every two weeks, or as necessary to ensure vigorous growth

Inspection and Maintenance Guidelines:

- Permanent vegetation should be inspected weekly and after each rain event to locate and

repair any erosion.

- Erosion from storms or other damage should be repaired as soon as practical by regrading the area and applying new seed.
- If the vegetated cover is less than 80%, the area should be reseeded.

Stabilization measures will be initiated as soon as practicable in portions of the site where construction activities have temporarily or permanently ceased, and except as provided below, will be initiated no more than fourteen (14) days after the construction activity in that portion of the site has temporarily or permanently ceased. Where construction activity on a portion of the site is temporarily ceased, and earth disturbing activities will be resumed within twenty-one (21) days, temporary stabilization measures do not have to be initiated on that portion of site. In areas experiencing droughts where the initiation of stabilization measures by the 14th day after construction activity has temporarily or permanently ceased is precluded by seasonably arid conditions, stabilization measures must be initiated as soon as practicable.

PERMANENT STORMWATER

Permanent Stormwater Section

Texas Commission on Environmental Quality

for Regulated Activities on the Edwards Aquifer Recharge Zone and Relating to 30 TAC §213.5(b)(4)(C), (D)(Ii), (E), and (5), Effective June 1, 1999

To ensure that the application is administratively complete, confirm that all fields in the form are complete, verify that all requested information is provided, consistently reference the same site and contact person in all forms in the application, and ensure forms are signed by the appropriate party.

Note: Including all the information requested in the form and attachments contributes to more streamlined technical reviews.

Signature

To the best of my knowledge, the responses to this form accurately reflect all information requested concerning the proposed regulated activities and methods to protect the Edwards Aquifer. This **Permanent Stormwater Section** is hereby submitted for TCEQ review and executive director approval. The application was prepared by:

Print Name of Customer/Agent: Michael Fisher, P.E.

Date: 10/9/21

Signature of Customer/Agent

Regulated Entity Name: Rancho Del Cielo Phase 4B

Permanent Best Management Practices (BMPs)

Permanent best management practices and measures that will be used during and after construction is completed.

1. ☒ Permanent BMPs and measures must be implemented to control the discharge of pollution from regulated activities after the completion of construction.

   ☐ N/A

2. ☒ These practices and measures have been designed, and will be constructed, operated, and maintained to insure that 80% of the incremental increase in the annual mass loading of total suspended solids (TSS) from the site caused by the regulated activity is removed. These quantities have been calculated in accordance with technical guidance prepared or accepted by the executive director.

   ☒ The TCEQ Technical Guidance Manual (TGM) was used to design permanent BMPs and measures for this site.

☐ A technical guidance other than the TCEQ TGM was used to design permanent BMPs and measures for this site. The complete citation for the technical guidance that was used is: _____

☐ N/A

3. ☒ Owners must insure that permanent BMPs and measures are constructed and function as designed. A Texas Licensed Professional Engineer must certify in writing that the permanent BMPs or measures were constructed as designed. The certification letter must be submitted to the appropriate regional office within 30 days of site completion.

   ☐ N/A

4. Where a site is used for low density single-family residential development and has 20 % or less impervious cover, other permanent BMPs are not required. This exemption from permanent BMPs must be recorded in the county deed records, with a notice that if the percent impervious cover increases above 20% or land use changes, the exemption for the whole site as described in the property boundaries required by 30 TAC §213.4(g) (relating to Application Processing and Approval), may no longer apply and the property owner must notify the appropriate regional office of these changes.

   ☐ The site will be used for low density single-family residential development and has 20% or less impervious cover.
   ☐ The site will be used for low density single-family residential development but has more than 20% impervious cover.
   ☒ The site will not be used for low density single-family residential development.

5. The executive director may waive the requirement for other permanent BMPs for multi-family residential developments, schools, or small business sites where 20% or less impervious cover is used at the site. This exemption from permanent BMPs must be recorded in the county deed records, with a notice that if the percent impervious cover increases above 20% or land use changes, the exemption for the whole site as described in the property boundaries required by 30 TAC §213.4(g) (relating to Application Processing and Approval), may no longer apply and the property owner must notify the appropriate regional office of these changes.

   ☐ **Attachment A - 20% or Less Impervious Cover Waiver**. The site will be used for multi-family residential developments, schools, or small business sites and has 20% or less impervious cover. A request to waive the requirements for other permanent BMPs and measures is attached.
   ☐ The site will be used for multi-family residential developments, schools, or small business sites but has more than 20% impervious cover.
   ☒ The site will not be used for multi-family residential developments, schools, or small business sites.

6. ☒ **Attachment B - BMPs for Upgradient Stormwater**.

☐ A description of the BMPs and measures that will be used to prevent pollution of surface water, groundwater, or stormwater that originates upgradient from the site and flows across the site is attached.

☐ No surface water, groundwater or stormwater originates upgradient from the site and flows across the site, and an explanation is attached.

☒ Permanent BMPs or measures are not required to prevent pollution of surface water, groundwater, or stormwater that originates upgradient from the site and flows across the site, and an explanation is attached.

7. ☒ **Attachment C - BMPs for On-site Stormwater**.

☒ A description of the BMPs and measures that will be used to prevent pollution of surface water or groundwater that originates on-site or flows off the site, including pollution caused by contaminated stormwater runoff from the site is attached.

☐ Permanent BMPs or measures are not required to prevent pollution of surface water or groundwater that originates on-site or flows off the site, including pollution caused by contaminated stormwater runoff, and an explanation is attached.

8. ☒ **Attachment D - BMPs for Surface Streams**. A description of the BMPs and measures that prevent pollutants from entering surface streams, sensitive features, or the aquifer is attached. Each feature identified in the Geologic Assessment as sensitive has been addressed.

☐ N/A

9. ☒ The applicant understands that to the extent practicable, BMPs and measures must maintain flow to naturally occurring sensitive features identified in either the geologic assessment, executive director review, or during excavation, blasting, or construction.

☒ The permanent sealing of or diversion of flow from a naturally-occurring sensitive feature that accepts recharge to the Edwards Aquifer as a permanent pollution abatement measure has not been proposed.

☐ **Attachment E - Request to Seal Features**. A request to seal a naturally-occurring sensitive feature, that includes, for each feature, a justification as to why no reasonable and practicable alternative exists, is attached.

10. ☒ **Attachment F - Construction Plans**. All construction plans and design calculations for the proposed permanent BMP(s) and measures have been prepared by or under the direct supervision of a Texas Licensed Professional Engineer, and are signed, sealed, and dated. The plans are attached and, if applicable include:

☒ Design calculations (TSS removal calculations)

☒ TCEQ construction notes

☒ All geologic features

☒ All proposed structural BMP(s) plans and specifications

☐ N/A

11. ☒ **Attachment G - Inspection, Maintenance, Repair and Retrofit Plan**. A plan for the inspection, maintenance, repairs, and, if necessary, retrofit of the permanent BMPs and measures is attached. The plan includes all of the following:

    ☒ Prepared and certified by the engineer designing the permanent BMPs and measures
    ☒ Signed by the owner or responsible party
    ☒ Procedures for documenting inspections, maintenance, repairs, and, if necessary retrofit
    ☒ A discussion of record keeping procedures

    ☐ N/A

12. ☐ **Attachment H - Pilot-Scale Field Testing Plan**. Pilot studies for BMPs that are not recognized by the Executive Director require prior approval from the TCEQ. A plan for pilot-scale field testing is attached.

    ☒ N/A

13. ☒ **Attachment I -Measures for Minimizing Surface Stream Contamination**. A description of the measures that will be used to avoid or minimize surface stream contamination and changes in the way in which water enters a stream as a result of the construction and development is attached. The measures address increased stream flashing, the creation of stronger flows and in-stream velocities, and other in-stream effects caused by the regulated activity, which increase erosion that results in water quality degradation.

    ☐ N/A

Responsibility for Maintenance of Permanent BMP(s)

Responsibility for maintenance of best management practices and measures after construction is complete.

14. ☒ The applicant is responsible for maintaining the permanent BMPs after construction until such time as the maintenance obligation is either assumed in writing by another entity having ownership or control of the property (such as without limitation, an owner's association, a new property owner or lessee, a district, or municipality) or the ownership of the property is transferred to the entity. Such entity shall then be responsible for maintenance until another entity assumes such obligations in writing or ownership is transferred.

    ☐ N/A

15. ☒ A copy of the transfer of responsibility must be filed with the executive director at the appropriate regional office within 30 days of the transfer if the site is for use as a multiple single-family residential development, a multi-family residential development, or a non-residential development such as commercial, industrial, institutional, schools, and other sites where regulated activities occur.

    ☐ N/A

ATTACHMENT B

BMPs for Upgradient Stormwater

As designed and permitted with Rancho Del Cielo Phase 1 (EAPP ID No. 11002378), upgradient stormwater from a portion of the project located entirely outside of the Edwards Aquifer Recharge Zone flows through existing Batch Detention Pond '2B'. This 0.51-acre off-site area includes approximately 0.30 acres of proposed impervious cover, which is not included in the required TSS removal for the Batch Detention Pond '2B' watershed as TSS removal is not required for this area. The 0.30 acres of proposed off-site impervious cover is included in the maximum TSS load removed calculations by Detention Pond '2B'. Please see the TSS Removal Calculations on Sheet 20 of 36 of the attached construction plans.

No upgradient stormwater is anticipated to flow through the Phase 4B project limits.

ATTACHMENT C

BMPs for Onsite Stormwater

Construction activities proposed within the Rancho Del Cielo Phase 4B WPAP include clearing, grading, excavation, installation of utilities and drainage improvements, streets, and 20 homes with associated driveways. Rancho Del Cielo Phase 4B consists of approximately 10.16 acres, with approximately 0.98 acres of new proposed impervious cover over the Edwards Aquifer Recharge Zone. Including the impervious cover proposed and approved with Rancho Del Cielo Phase 1 (EAPP ID No. 11002378 and 11002937), Rancho Del Cielo Phase 2 (EAPP IS No. 11003130), Rancho Del Cielo Phase 3 (EAPP ID No. 11002401), and Rancho Del Cielo Phase 4 (EAPP ID No. 11004005), the total impervious cover currently proposed within the 198.49-acre Rancho Del Cielo project limits over the EARZ is 80.66 acres. There is no existing impervious cover within the Phase 4B project limits.

One (1) existing batch detention pond (Pond 2A) with earthen side-slopes at 3:1 and maintenance access at 4:1 slopes and four (4) fifteen-foot (15') wide Engineered Vegetated Filter Strips (VFS) are proposed as the Permanent Best Management Practices (PBMPS) for this site. The existing batch detention pond (Pond 2A) was designed and permitted with Rancho Del Cielo Phase 2 (EAPP ID No. 11003130).

Existing Batch Detention Pond '2B' provides overtreatment for approximately 0.65 acres of new proposed impervious cover in the Phase 4B project limits and overtreatment for a total of 1.27 acres within the overall Rancho Del Cielo. The four (4) 15' Engineered Vegetated Filter Strips provide direct treatment for approximately 0.33 acres of new proposed impervious cover in the Rancho Del Cielo Phase 4B project limits. All PBMPs have been designed in accordance with the TCEQ's Technical Guidance Manual (TGM) RG-348 (2005) to remove 80% of the increase in TSS from the site. The batch detention ponds have been designed to treat stormwater runoff at ultimate development within the Rancho Del Cielo subdivision, and water quality calculations have been provided with this application for the proposed Rancho Del Cielo Phase 4B development. Please see the Treatment Summary Table provided with the attached construction plan sheets for more detail.

ATTACHMENT D

BMPs for Surface Streams

Construction activities proposed within the Rancho Del Cielo Phase 4B WPAP include clearing, grading, excavation, installation of utilities and drainage improvements, streets, and 20 homes with associated driveways. Rancho Del Cielo Phase 4B consists of approximately 10.16 acres, with approximately 0.98 acres of new proposed impervious cover over the Edwards Aquifer Recharge Zone. Including the impervious cover proposed and approved with Rancho Del Cielo Phase 1 (EAPP ID No. 11002378 and 11002937), Rancho Del Cielo Phase 2 (EAPP IS No. 11003130), Rancho Del Cielo Phase 3 (EAPP ID No. 11002401), and Rancho Del Cielo Phase 4 (EAPP ID No. 11004005), the total impervious cover currently proposed within the 198.49-acre Rancho Del Cielo project limits over the EARZ is 80.66 acres. There is no existing impervious cover within the Phase 4B project limits.

One (1) existing batch detention pond (Pond 2A) with earthen side-slopes at 3:1 and maintenance access at 4:1 slopes and four (4) fifteen-foot (15') wide Engineered Vegetated Filter Strips (VFS) are proposed as the Permanent Best Management Practices (PBMPS) for this site. The existing batch detention pond (Pond 2A) was designed and permitted with Rancho Del Cielo Phase 2 (EAPP ID No. 11003130).

Existing Batch Detention Pond '2B' provides overtreatment for approximately 0.65 acres of new proposed impervious cover in the Phase 4B project limits and overtreatment for a total of 1.27 acres within the overall Rancho Del Cielo. The four (4) 15' Engineered Vegetated Filter Strips provide direct treatment for approximately 0.33 acres of new proposed impervious cover in the Rancho Del Cielo Phase 4B project limits. All PBMPs have been designed in accordance with the TCEQ's Technical Guidance Manual (TGM) RG-348 (2005) to remove 80% of the increase in TSS from the site. The batch detention ponds have been designed to treat stormwater runoff at ultimate development within the Rancho Del Cielo subdivision, and water quality calculations have been provided with this application for the proposed Rancho Del Cielo Phase 4B development. Please see the Treatment Summary Table provided with the attached construction plan sheets for more detail.

Runoff from impervious cover areas will be treated by the PBMPs prior to its discharge downstream into the Glasscock Branch.

ATTACHMENT F

Construction Plans

See attached drawing set for relevant construction plans and design drawings for Rancho Del Cielo Phase 4B.

ATTACHMENT G

Maintenance Procedures for Permanent BMPs

Note: Additional guidance can be obtained from TCEQ's Technical Guidance Manual (TGM) RG-348 (2005) Section 3.5

A written record will be kept of inspection results and maintenance performed.

3.5.8 Vegetative Filter Strips

Once a vegetated area is well established, little additional maintenance is generally necessary. The key to establishing a viable vegetated feature is the care and maintenance it received in the first few months after it is planted. Once established, all vegetated BMPs require some basic maintenance to insure the health of the plants including:

- *Pest Management.* An integrated Pest Management (IPM) Plan should be developed for vegetated areas. This plan should specify how problem insects and weeds will be controlled with minimal or no use of insecticides and herbicides.

- *Seasonal Mowing and Lawn Care*. If the filter strip is made up of turf grass, it should be mowed as needed to limit vegetation height to 18 inches, using a mulching mower (or removal of clippings). If native grasses are used, the filter may require less frequent mowing, but a minimum of twice annually. Grass clippings and brush debris should not be deposited on vegetated filter strip areas. Regular mowing should also include weed control practices, however herbicide use should be kept to a minimum (Urbonas et al., 1992). Healthy grass can be maintained without using fertilizers because runoff usually contains sufficient nutrients. Irrigation of the site can help assure a dense and healthy vegetative cover.

- *Inspection.* Inspect filter strips at least twice annually for erosion or damage to vegetation; however, additional inspection after periods of heavy runoff is most desirable. The strip should be checked for uniformity of grass cover, debris and litter, and areas of sediment accumulation. More frequent inspections of the grass cover during the first few years after establishment will help to determine if any problems are developing, and to plan for long-term restorative maintenance needs. Bare spots and areas of erosion identified during semi-annual inspections must be replanted and 3-92 restored to meet specifications. Construction of a level spreader device may be necessary to reestablish shallow overland flow.

- *Debris and Litter Removal.* Trash tends to accumulate in vegetated areas, particularly along highways. Any filter strip structures (i.e. level spreaders) should be kept free of obstructions to reduce floatables being flushed downstream, and for aesthetic reasons. The need for this practice is determined through periodic inspection, but should be performed no less than 4 times per year.

- *Sediment Removal.* Sediment removal is not normally required in filter strips, since the vegetation normally grows through it and binds it to the soil. However, sediment may accumulate along the

upstream boundary of the strip preventing uniform overland flow. Excess sediment should be removed by hand or with flat-bottomed shovels.

- *Grass Reseeding and Mulching*. A healthy dense grass should be maintained on the filter strip. If areas are eroded, they should be filled, compacted, and reseeded so that the final grade is level. Grass damaged during the sediment removal process should be promptly replaced using the same seed mix used during filter strip establishment. If possible, flow should be diverted from the damaged areas until the grass is firmly established. Bare spots and areas of erosion identified during semi-annual inspections must be replanted and restored to meet specifications. Corrective maintenance, such as weeding or replanting should be done more frequently in the first two to three years after installation to ensure stabilization. Dense vegetation may require irrigation immediately after planting, and during particular dry periods, particularly as the vegetation is initially established.

Signature

10/2/2024
Date

Ally Benoit
Lennar Homes of Texas Land and Construction, Ltd.

ATTACHMENT I

Measures for Minimizing Surface Stream Contamination

Any points where discharge from the site is concentrated and erosive velocities exist will include appropriately sized energy dissipators to reduce velocities to non-erosive levels.

AGENT AUTHORIZATION

Agent Authorization Form
For Required Signature
Edwards Aquifer Protection Program
Relating to 30 TAC Chapter 213
Effective June 1, 1999

I Ally Beard,
Print Name

Land Manager,
Title - Owner/President/Other

of Lennar Homes of Texas Land and Construction, Ltd.,
Corporation/Partnership/Entity Name

have authorized Jennifer Franklin, P.E.
Print Name of Agent/Engineer

of Pape-Dawson Consulting Engineers, LLC
Print Name of Firm

to represent and act on the behalf of the above named Corporation, Partnership, or Entity for the purpose of preparing and submitting this plan application to the Texas Commission on Environmental Quality (TCEQ) for the review and approval consideration of regulated activities.

I also understand that:

1. The applicant is responsible for compliance with 30 Texas Administrative Code Chapter 213 and any condition of the TCEQ's approval letter. The TCEQ is authorized to assess administrative penalties of up to $10,000 per day per violation.

2. For those submitting an application who are not the property owner, but who have the right to control and possess the property, additional authorization is required from the owner.

3. Application fees are due and payable at the time the application is submitted. The application fee must be sent to the TCEQ cashier or to the appropriate regional office. The application will not be considered until the correct fee is received by the commission.

4. A notarized copy of the Agent Authorization Form must be provided for the person preparing the application, and this form must accompany the completed application.

5. No person shall commence any regulated activity on the Edwards Aquifer Recharge Zone, Contributing Zone or Transition Zone until the appropriate application for the activity has been filed with and approved by the Executive Director.

SIGNATURE PAGE:

Applicant's Signature

10/2/2024
Date

THE STATE OF Texas §

County of Travis §

BEFORE ME, the undersigned authority, on this day personally appeared Ally Benoit known to me to be the person whose name is subscribed to the foregoing instrument, and acknowledged to me that (s)he executed same for the purpose and consideration therein expressed.

GIVEN under my hand and seal of office on this 2nd day of October 2024.

MATTHEW PEACE WALLS
Notary Public, State of Texas
Comm. Expires 10-22-2027
Notary ID 132220835

Matthew Peace Walls
NOTARY PUBLIC

Matthew Peace Walls
Typed or Printed Name of Notary

MY COMMISSION EXPIRES: 10-22-2027

Owner Authorization Form

for Required Signature for submitting and signing an application for an Edwards Aquifer Protection Plan (Plan) and conducting regulated activities in accordance with an approved Plan.

Texas Commission on Environmental Quality
Edwards Aquifer Protection Program
Relating to the Edwards Aquifer Rules of
Title 30 of the Texas Administrative Code
(30 TAC), Chapter 213
Effective June 1, 1999

Land Owner Authorization

I, Nathan Holt of KL LHB3 AIV LLC

Land Owner Name (Individual) | Firm (applicable to Legal Entities)

am the Owner of Record or Title Holder of the property located at:

Northwest of the intersection of CR 237 and CR 238 near Jarrell TX, 76537

(Legal description of the property referenced in the application)

and being duly authorized under 30 TAC § 213.4(c)(2) and § 213.4(d)(1) or § 213.23(c)(2) and § 213.23(d) to submit and sign an application for a Plan, do hereby authorize:

Lennar Homes of Texas Land and Construction, Ltd.

(Applicant Name / Plan Holder (Legal Entity or Individual))

to conduct:

construction of a residential subdivision including grading, streets, homes, utilities, VFS, and water quality ponds

(Description of the proposed regulated activities)

on the property described above or at:

Northwest of the intersection of CR 237 and CR 238 near Jarrell TX, 76537

(If applicable to a precise location for the authorized regulated activities)

Land Owner Acknowledgement

I, Nathan Holt of KL LHB3 AIV LLC

Land Owner Name (Individual) | Firm (applicable to Legal Entities)

understand that while Lennar Homes of Texas Land and Construction, Ltd.

Applicant Name / Plan Holder (Legal Entity or Individual)

is responsible for compliance with the approved or conditionally approved Plan and any special conditions of the approved Plan through all phases of Plan implementation,

I, Nathan Holt of KL LHB3 AIV LLC
Land Owner Name (Individual) Firm (applicable to Legal Entities)

as Owner of Record or Title Holder of the property described above, I am ultimately responsible for ensuring that compliance with the approved or conditionally approved Plan and any special conditions of the approved Plan, through all phases of Plan implementation, is achieved even if the responsibility for compliance and the right to possess and control of the property referenced in the application has been contractually assumed by another legal entity.

I, Nathan Holt of KL LHB3 AIV LLC
Land Owner Name (Individual) Firm (applicable to Legal Entities)

further understand that any failure to comply with any condition of the Executive Director's approval is a violation and is subject to administrative rule or orders and penalties as provided under 30 TAC § 213.10 (relating to Enforcement). Such violation may also be subject to civil penalties and injunction.

Land Owner Signature

Nathan Holt
Land Owner Signature

October 2, 2024
Date

THE STATE OF § ARIZONA

County of § Maricopa

BEFORE ME, the undersigned authority, on this day personally appeared known to me to be the person whose name is subscribed to the foregoing instrument and acknowledged to me that (s)he executed same for the purpose and consideration therein expressed.

GIVEN under my hand and seal of office on this 2nd day of October, 2024

Julie Gillett
NOTARY PUBLIC

JULIE GILLETT
Notary Public - State of Arizona
MARICOPA COUNTY
Commission # 635441
Expires August 05, 2026

Julie Gillett
Typed or Printed Name of Notary

MY COMMISSION EXPIRES: 08/05/2026

Attached: (Mark all that apply)

- ☐ Lease Agreement
- ☐ Signed Contract
- ☐ Deed Recorded Easement
- ☐ Other legally binding document

Applicant Acknowledgement

I, Ally Beard of Lennar Homes of Texas Land and Construction, Ltd.
Applicant Name (Individual) Firm (applicable to Legal Entities)

acknowledge that KL LHB3 AIV LLC
Land Owner Name (Legal Entity or Individual)

has provided Lennar Homes of Texas Land and Construction, Ltd.
Applicant Name (Legal Entity or Individual)

with the right to possess and control the property referenced in the Edwards Aquifer Protection Plan (Plan).

I understand that Lennar Homes of Texas Land and Construction, Ltd.
Applicant Name (Legal Entity or Individual)

is responsible, contractually or not, for compliance with the approved or conditionally approved Plan and any special conditions of the approved Plan through all phases of Plan implementation. I further understand that failure to comply with any condition of the Executive Director's approval is a violation and is subject to administrative rule or orders and penalties as provided under § 213.10 (relating to Enforcement). Such violation may also be subject to civil penalties and injunction.

Applicant Signature

Applicant Signature

10/2/2024
Date

THE STATE OF § Texas

County of § Travis

BEFORE ME, the undersigned authority, on this day personally appeared known to me to be the person whose name is subscribed to the foregoing instrument and acknowledged to me that (s)he executed same for the purpose and consideration therein expressed.

GIVEN under my hand and seal of office on this 2nd day of October 2024

NOTARY PUBLIC

MATTHEW PEACE WALLS
Notary Public, State of Texas
Comm. Expires 10-22-2027
Notary ID 132220835

Matthew Peace Walls
Typed or Printed Name of Notary

MY COMMISSION EXPIRES: 10-22-2027

APPLICATION FEE FORM

Application Fee Form

Texas Commission on Environmental Quality
Name of Proposed Regulated Entity: Rancho Del Cielo Phase 4B
Regulated Entity Location: Northwest of the intersection of CR 237 & CR 238, Jarrell, Texas
Name of Customer: Lennar Homes of Texas Land and Construction, Ltd.
Contact Person: Ally Benoit Phone: 469-583-9989
Customer Reference Number (if issued):CN 602412207
Regulated Entity Reference Number (if issued):RN 111188447

Austin Regional Office (3373)

☐ Hays ☐ Travis ☒ Williamson

San Antonio Regional Office (3362)

☐ Bexar ☐ Medina ☐ Uvalde
☐ Comal ☐ Kinney

Application fees must be paid by check, certified check, or money order, payable to the **Texas Commission on Environmental Quality**. Your canceled check will serve as your receipt. **This form must be submitted with your fee payment**. This payment is being submitted to:

☒ Austin Regional Office
☐ Mailed to: TCEQ - Cashier
Revenues Section
Mail Code 214
P.O. Box 13088
Austin, TX 78711-3088

☐ San Antonio Regional Office
☐ Overnight Delivery to: TCEQ - Cashier
12100 Park 35 Circle
Building A, 3rd Floor
Austin, TX 78753
(512)239-0357

Site Location (Check All That Apply):

☒ Recharge Zone ☐ Contributing Zone ☐ Transition Zone

Type of Plan	*Size*	*Fee Due*
Water Pollution Abatement Plan, Contributing Zone Plan: One Single Family Residential Dwelling	Acres	$
Water Pollution Abatement Plan, Contributing Zone Plan: Multiple Single Family Residential and Parks	198.49 Acres	$ 8,000
Water Pollution Abatement Plan, Contributing Zone Plan: Non-residential	Acres	$
Sewage Collection System	L.F.	$
Lift Stations without sewer lines	Acres	$
Underground or Aboveground Storage Tank Facility	Tanks	$
Piping System(s)(only)	Each	$
Exception	Each	$
Extension of Time	Each	$

Signature: _____ 10/9/24

Date: _____

Application Fee Schedule

Texas Commission on Environmental Quality
Edwards Aquifer Protection Program 30 TAC Chapter 213 (effective 05/01/2008)

Water Pollution Abatement Plans and Modifications

Contributing Zone Plans and Modifications

Project	*Project Area in Acres*	*Fee*
One Single Family Residential Dwelling	< 5	$650
Multiple Single Family Residential and Parks	< 5 5 < 10 10 < 40 40 < 100 100 < 500 ≥ 500	$1,500 $3,000 $4,000 $6,500 $8,000 $10,000
Non-residential (Commercial, industrial, institutional, multi-family residential, schools, and other sites where regulated activities will occur)	< 1 1 < 5 5 < 10 10 < 40 40 < 100 ≥ 100	$3,000 $4,000 $5,000 $6,500 $8,000 $10,000

Organized Sewage Collection Systems and Modifications

Project	*Cost per Linear Foot*	*Minimum Fee-Maximum Fee*
Sewage Collection Systems	$0.50	$650 - $6,500

Underground and Aboveground Storage Tank System Facility Plans and Modifications

Project	*Cost per Tank or Piping System*	*Minimum Fee-Maximum Fee*
Underground and Aboveground Storage Tank Facility	$650	$650 - $6,500

Exception Requests

Project	*Fee*
Exception Request	$500

Extension of Time Requests

Project	***Fee***
Extension of Time Request	$150

CORE DATA FORM

TCEQ Core Data Form

TCEQ Use Only

For detailed instructions regarding completion of this form, please read the Core Data Form Instructions or call 512-239-5175.

SECTION I: General Information

1. Reason for Submission (*If other is checked please describe in space provided.*)

☒ New Permit, Registration or Authorization (*Core Data Form should be submitted with the program application.*)

☐ Renewal (*Core Data Form should be submitted with the renewal form*) ☐ Other

2. Customer Reference Number *(if issued)*	Follow this link to search for CN or RN numbers in Central Registry**	3. Regulated Entity Reference Number *(if issued)*
CN 602412207		RN 11118847

SECTION II: Customer Information

4. General Customer Information	5. Effective Date for Customer Information Updates (mm/dd/yyyy)	4/20/2022

☒ New Customer ☐ Update to Customer Information ☐ Change in Regulated Entity Ownership

☐ Change in Legal Name (Verifiable with the Texas Secretary of State or Texas Comptroller of Public Accounts)

The Customer Name submitted here may be updated automatically based on what is current and active with the Texas Secretary of State (SOS) or Texas Comptroller of Public Accounts (CPA).

6. Customer Legal Name *(If an individual, print last name first: eg: Doe, John)*	*If new Customer, enter previous Customer below:*
Lennar Homes of Texas Land and Construction, Ltd.	

7. TX SOS/CPA Filing Number	8. TX State Tax ID (11 digits)	9. Federal Tax ID (9 digits)	10. DUNS Number *(if applicable)*
11452910	17527920189	753792018	

11. Type of Customer: ☒ Corporation ☐ Individual Partnership: ☐ General ☐ Limited

Government: ☐ City ☐ County ☐ Federal ☐ State ☐ Other ☐ Sole Proprietorship ☐ Other:

12. Number of Employees
☐ 0-20 ☒ 21-100 ☐ 101-250 ☐ 251-500 ☐ 501 and higher

13. Independently Owned and Operated?
☐ Yes ☒ No

14. Customer Role (Proposed or Actual) – *as it relates to the Regulated Entity listed on this form. Please check one of the following*

☒ Owner ☐ Operator ☐ Owner & Operator
☐ Occupational Licensee ☐ Responsible Party ☐ Voluntary Cleanup Applicant ☐ Other:

15. Mailing Address:							
	13620 N FM 620						
	Bldg. B, Suite 150						
	City	Austin	State	TX	ZIP	78717	ZIP + 4

16. Country Mailing Information *(if outside USA)*	17. E-Mail Address *(if applicable)*
	Ally.Benoit@Lennar.com

18. Telephone Number	19. Extension or Code	20. Fax Number *(if applicable)*
(469) 583-9989		( ) -

SECTION III: Regulated Entity Information

21. General Regulated Entity Information (*If 'New Regulated Entity" is selected below this form should be accompanied by a permit application*)

☒ New Regulated Entity ☐ Update to Regulated Entity Name ☐ Update to Regulated Entity Information

The Regulated Entity Name submitted may be updated in order to meet TCEQ Agency Data Standards (removal of organizational endings such as Inc, LP, or LLC).

22. Regulated Entity Name (*Enter name of the site where the regulated action is taking place.*)

Rancho Del Cielo Phase 4B

23. Street Address of the Regulated Entity: *(No PO Boxes)*							
	City		State		ZIP		ZIP + 4	
24. County	Williamson						

Enter Physical Location Description if no street address is provided.

25. Description to Physical Location:	Northwest of the intersection of CR 237 & CR 238				
26. Nearest City			State	Nearest ZIP Code	
Jarrell			TX	76537	
27. Latitude (N) In Decimal:	30.784551		28. Longitude (W) In Decimal:	-97.644065	
Degrees	Minutes	Seconds	Degrees	Minutes	Seconds
30	47	4.4	-97	38	38.6

29. Primary SIC Code (4 digits)	30. Secondary SIC Code (4 digits)	31. Primary NAICS Code (5 or 6 digits)	32. Secondary NAICS Code (5 or 6 digits)
1521		236115	

33. What is the Primary Business of this entity? *(Do not repeat the SIC or NAICS description.)*

Single-family residential subdivision

34. Mailing Address:	13620 N FM 620							
	Bldg. B, Suite 150							
	City	Austin	State	TX	ZIP	78717	ZIP + 4	
35. E-Mail Address:	Ally.Benoit@Lennar.com							
36. Telephone Number		37. Extension or Code		38. Fax Number *(if applicable)*				
(469) 583-9989				( ) -				

39. TCEQ Programs and ID Numbers Check all Programs and write in the permits/registration numbers that will be affected by the updates submitted on this form. See the Core Data Form instructions for additional guidance.

☐ Dam Safety	☐ Districts	☒ Edwards Aquifer	☐ Emissions Inventory Air	☐ Industrial Hazardous Waste
☐ Municipal Solid Waste	☐ New Source Review Air	☐ OSSF	☐ Petroleum Storage Tank	☐ PWS
☐ Sludge	☐ Storm Water	☐ Title V Air	☐ Tires	☐ Used Oil
☐ Voluntary Cleanup	☐ Waste Water	☐ Wastewater Agriculture	☐ Water Rights	☐ Other:

SECTION IV: Preparer Information

40. Name:	Tabatha Farr, EIT	41. Title:	Engineer III

42. Telephone Number	43. Ext./Code	44. Fax Number	45. E-Mail Address
(512) 454-8711		( ) -	tfarr@pape-dawson.com

SECTION V: Authorized Signature

46. By my signature below, I certify, to the best of my knowledge, that the information provided in this form is true and complete, and that I have signature authority to submit this form on behalf of the entity specified in Section II, Field 6 and/or as required for the updates to the ID numbers identified in field 39.

Company:	Pape-Dawson Consulting Engineers, LLC	Job Title:	Senior Vice President
Name *(In Print)*:	Michael Fisher, P.E.	Phone:	(512) 454- 8711
Signature:		Date:	10/9/24

CONSTRUCTION PLANS

REVISIONS		RANCHO DEL CIELO MUD	CITY OF JARRELL	WILLIAMSON COUNTY
NO.	SHEET(S) DESCRIPTION DATE	APPROVED BY/DATE	APPROVED BY/DATE	APPROVED BY/DATE

RANCHO DEL CIELO

PHASE 4B

STREET, DRAINAGE, WATER & WASTEWATER IMPROVEMENTS
RANCHO DEL CIELO MUNICIPAL UTILITY DISTRICT
WILLIAMSON COUNTY

WILLIAMSON COUNTY, TEXAS

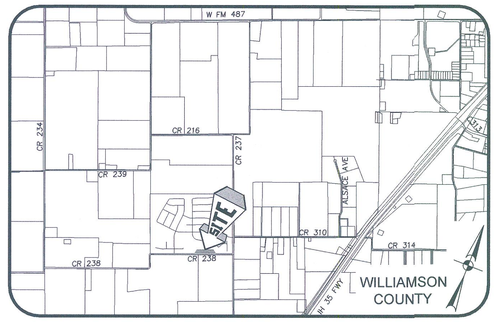

VICINITY MAP
N.T.S.

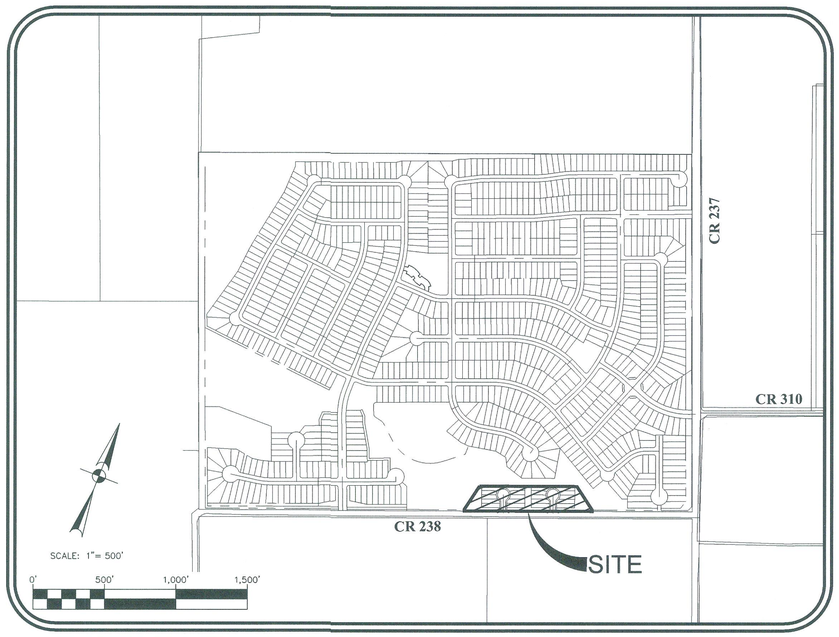

THE LOCATIONS OF EXISTING UNDERGROUND UTILITIES ARE SHOWN IN AN APPROXIMATE WAY ONLY AND HAVE NOT BEEN INDEPENDENTLY VERIFIED BY THE OWNER OR ITS REPRESENTATIVE. THE CONTRACTOR SHALL DETERMINE THE EXACT LOCATION OF ALL EXISTING UTILITIES BEFORE COMMENCING WORK, AND AGREES TO BE FULLY RESPONSIBLE FOR ANY AND ALL DAMAGES WHICH MIGHT BE ASSOCIATED BY THE CONTRACTOR'S FAILURE TO EXACTLY LOCATE AND PRESERVE ANY AND ALL UNDERGROUND UTILITIES.

THE CONTRACTOR SHALL OBTAIN A "NOTICE OF PROPOSED INSTALLATION OF UTILITY LINE" PERMIT FROM WILLIAMSON COUNTY FOR ANY WORK PERFORMED IN THE EXISTING COUNTY RIGHT-OF-WAY (DRIVEWAY APRON, WATER MAIN TIE-IN, ETC.) THIS PERMIT APPLICATION WILL REQUIRE A LIABILITY AGREEMENT, A CONSTRUCTION COST ESTIMATE FOR WORK WITHIN THE RIGHT-OF-WAY INCLUDING PAVEMENT REPAIR (IF NEEDED), A PERFORMANCE BOND, CONSTRUCTION PLANS AND, IF NECESSARY, A TRAFFIC CONTROL PLAN. AN INSPECTION FEE, AND A PRE-CONSTRUCTION MEETING MAY ALSO BE REQUIRED, DEPENDING ON THE SCOPE OF WORK. THE PERMIT WILL BE REVIEWED AND APPROVED BY THE COUNTY ENGINEER, AND MUST ALSO BE APPROVED BY THE WILLIAMSON COUNTY COMMISSIONERS COURT IF ANY ROAD CLOSURE IS INVOLVED.

A PORTION OF THE PROPOSED IMPROVEMENTS ARE WITHIN THE 1% ANNUAL CHANCE FLOODPLAIN PER FEDERAL FLOOD INSURANCE ADMINISTRATION FIRM COMMUNITY PANEL NO(s). 48491C0125F, DATED DECEMBER 20, 2019, WILLIAMSON COUNTY, TEXAS.

ENGINEER:
PAPE-DAWSON ENGINEERS
10801 N MOPAC EXPY, BLDG 3, STE 200
AUSTIN, TEXAS 78757
PHONE (512) 454-8711

SURVEYOR:
PAPE-DAWSON ENGINEERS
10801 N MOPAC EXPY, BLDG 3, STE 200
AUSTIN, TEXAS 78757
PHONE (512) 454-8711

OWNER / SUBDIVIDER:
LENNAR HOMES OF TEXAS LAND & CONSTRUCTION, LTD.
13620 N FM 620, BUILDING B, SUITE 150
AUSTIN, TEXAS 78717

Sheet List Table	
Sheet Number	Sheet Title
1	COVER SHEET
2	PRELIMINARY PLAT 1 OF 3
3	PRELIMINARY PLAT 2 OF 3
4	PRELIMINARY PLAT 3 OF 3
5	CONSTRUCTION NOTES 1 OF 3
6	CONSTRUCTION NOTES 2 OF 3
7	CONSTRUCTION NOTES 3 OF 3
8	RANCHO DEL CIELO MUD EASEMENT & PROPERTY REVIEW 1 OF 2
9	RANCHO DEL CIELO MUD EASEMENT & PROPERTY REVIEW 2 OF 2
10	EROSION & SEDIMENTATION CONTROL PLAN 1 OF 2
11	EROSION & SEDIMENTATION CONTROL PLAN 2 OF 2
12	SIGNAGE, STRIPING AND TRAFFIC CONTROL PLAN
13	STREET PLAN AND PROFILE
14	OVERALL DRAINAGE STUDY
15	DRAINAGE AREA MAP
16	DRAINAGE AREA CALCULATIONS
17	OVERALL STORM DRAIN PLAN
18	CHANNEL A - PLAN AND PROFILE
19	WATER QUALITY TREATMENT SUMMARY - PHASE 5 - 1 OF 2
20	WATER QUALITY TREATMENT SUMMARY - PHASE 5 - 2 OF 2
21	OVERALL GRADING PLAN
22	OVERALL WATER PLAN
23	OVERALL WASTEWATER PLAN 1 OF 2
24	OVERALL WASTEWATER PLAN 2 OF 2
25	WASTEWATER PLAN & PROFILE WW-O & WW-P
26	EROSION & SEDIMENTATION CONTROL DETAILS
27	STREET DETAILS 1 OF 3
28	STREET DETAILS 2 OF 3
29	STREET DETAILS 3 OF 3
30	DRAINAGE DETAILS 1 OF 3
31	DRAINAGE DETAILS 2 OF 3
32	DRAINAGE DETAILS 3 OF 3
33	WATER DETAILS 1 OF 2
34	WATER DETAILS 2 OF 2
35	WASTEWATER DETAILS 1 OF 2
36	WASTEWATER DETAILS 2 OF 2

REVIEWED BY:

ACCEPTED FOR CONSTRUCTION:

RANCHO DEL CIELO MUNICIPAL UTILITY DISTRICT DATE
DISTRICT ENGINEER

CITY OF JARRELL DATE
CITY ENGINEER

REVIEW OF THE PLANS BY THE DISTRICT IS LIMITED TO WATER, WASTEWATER, AND DRAINAGE FACILITIES, AND DOES NOT INDICATE A REVIEW OF THE ADEQUACY OF THE DESIGN OF FACILITIES. IN APPROVING THESE PLANS, THE DISTRICT MUST RELY ON THE ADEQUACY OF THE WORK OF THE DESIGN ENGINEER.

REVIEWED FOR COMPLIANCE WITH COUNTY REQUIREMENTS:

COUNTY ENGINEER, WILLIAMSON COUNTY

WILLIAMSON COUNTY EMERGENCY SERVICES DISTRICT NO. 5 DATE

ALL RESPONSIBILITY FOR THE ADEQUACY OF THESE PLANS REMAINS WITH THE ENGINEER WHO PREPARED THEM. IN ACCEPTING THESE PLANS, WILLIAMSON COUNTY AND RANCHO DEL CIELO M.U.D. MUST RELY UPON THE ADEQUACY OF THE WORK OF THE DESIGN ENGINEER.

PAPE-DAWSON ENGINEERS
AUSTIN | SAN ANTONIO | HOUSTON | FORT WORTH | DALLAS
10801 N MOPAC EXPY, BLDG 3, STE 200 | AUSTIN, TX 78759 | 512.454.8711
TBPE FIRM REGISTRATION #470 | TBPLS FIRM REGISTRATION #10028801

SUBMITTED BY:

STATE OF TEXAS
JENNIFER C. FRANKLIN
118838
LICENSED
PROFESSIONAL ENGINEER

9-25-24

PAPE-DAWSON ENGINEERS DATE
JENNIFER C. FRANKLIN, P.E. #118838
ASSOCIATE VICE PRESIDENT

RANCHO DEL CIELO - PHASE 4B

51118-61

Date: Sep 24, 2024, 3:54pm User ID: tstephens
File: H:\Projects\51\18\60_Phase 4\301 Construction Documents\Civil\51511118-61.dwg

THIS DOCUMENT HAS BEEN PRODUCED FROM MATERIAL THAT WAS STORED AND/OR TRANSMITTED ELECTRONICALLY AND MAY HAVE BEEN INADVERTENTLY ALTERED. RELY ONLY ON FINAL HARDCOPY MATERIALS BEARING THE CONSULTANT'S ORIGINAL SIGNATURE AND SEAL.

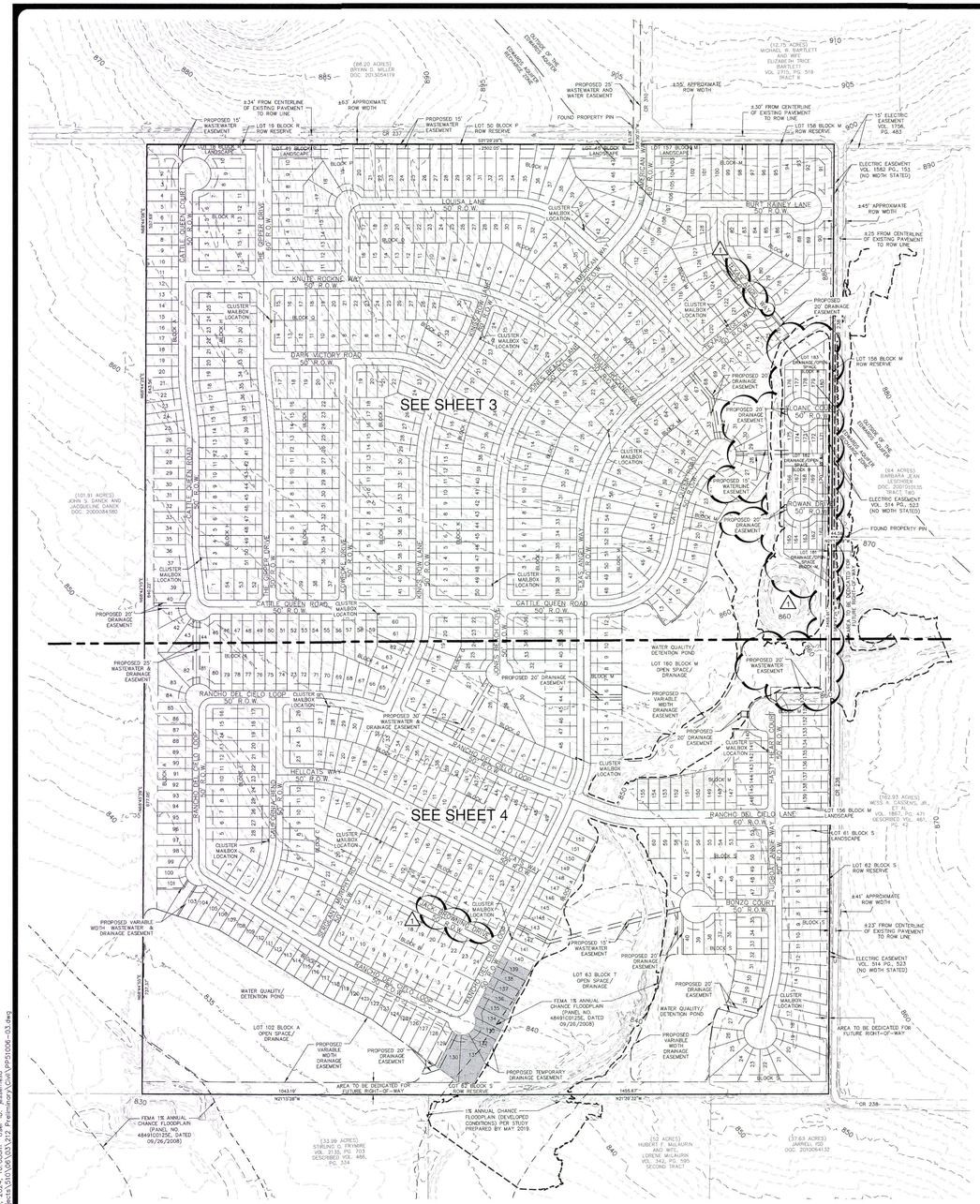

SCALE: 1"= 200'

0' 200' 400' 600'

LEGEND:

- FEMA FLOODPLAIN ZONE "A" DEFINED AS: AREAS SUBJECT TO THE 1% ANNUAL CHANCE FLOOD EVENT (PANEL NO. 48491C0125E, DATED 09/26/2008)
- 1% ANNUAL CHANCE FLOODPLAIN (DEVELOPED CONDITIONS) PER STUDY PREPARED BY PAPE-DAWSON ENGINEERS, INC., MAY 2019
- PROPOSED TEMPORARY DRAINAGE EASEMENT & AREA TO BE RECLAIMED FROM FEMA 1% ANNUAL CHANCE FLOODPLAIN
- EDWARDS AQUIFER BOUNDARY

NOTES:

1. THE OWNER UNDERSTANDS THAT IT IS THE RESPONSIBILITY OF THE OWNER, NOT THE CITY OR COUNTY TO ASSURE COMPLIANCE WITH THE PROVISIONS OF ALL APPLICABLE STATE, FEDERAL, AND LOCAL LAWS AND REGULATIONS RELATING TO THE ENVIRONMENT, INCLUDING, BUT NOT LIMITED TO THE ENDANGERED SPECIES ACT, STATE AQUIFER REGULATIONS, AND MUNICIPAL WATERSHED ORDINANCES.
2. A 10' WIDE PRIVATE UTILITY EASEMENT SHALL BE DEDICATED ADJACENT TO ALL STREET R.O.W. ON ALL LOTS.
3. PROPERTY OWNER SHALL PROVIDE FOR ACCESS TO DRAINAGE EASEMENTS AS MAY BE NECESSARY AND SHALL NOT PROHIBIT ACCESS BY REGULATORY AUTHORITIES.
4. ALL EASEMENTS ON PRIVATE PROPERTY SHALL BE MAINTAINED BY THE PROPERTY OWNER OR THEIR ASSIGNS.
5. PORTIONS OF THIS SUBDIVISION ARE LOCATED WITHIN THE RECHARGE ZONE OF THE EDWARDS AQUIFER.
6. MAINTENANCE OF THE DRAINAGE EASEMENTS SHALL BE THE RESPONSIBILITY OF THE PROPERTY OWNER.
7. THIS SUBDIVISION IS LOCATED WITHIN THE JURISDICTION OF WILLIAMSON COUNTY.
8. BUILDING SETBACK LINES SHALL BE IN ACCORDANCE WITH APPLICABLE OWNER RESTRICTIONS RECORDED IN COUNTY RECORDS AND WILLIAMSON COUNTY SUBDIVISION REGULATIONS OR APPLICABLE ORDINANCES BUT SHALL BE A MINIMUM OF 50 FEET FROM THE RIGHT-OF-WAY ALONG MAJOR ROADS AND 25 FEET FROM THE EDGE OF THE RIGHT-OF-WAY FROM ALL OTHER PUBLIC ROADS.
9. DRIVEWAY ACCESS TO LOTS WITHIN THIS SUBDIVISION FROM SIDE STREETS IS PROHIBITED.
10. DRIVEWAYS SHALL CONNECT ONLY TO AN INTERNAL PLATTED ROAD AND NOT TO CR 237, CR 238, OR FUTURE ARTERIAL ROADWAY.
11. NO STRUCTURE OR IMPROVEMENT ON ANY LOT IN THIS SUBDIVISION SHALL BE OCCUPIED UNTIL CONNECTED TO A WATER SUPPLY SYSTEM APPROVED BY THE TEXAS COMMISSION ON ENVIRONMENTAL QUALITY.
12. NO STRUCTURE OR IMPROVEMENT ON ANY LOT IN THIS SUBDIVISION SHALL BE OCCUPIED UNTIL CONNECTED TO A WASTEWATER COLLECTION SYSTEM APPROVED BY THE TEXAS COMMISSION ON ENVIRONMENTAL QUALITY.
13. THE OWNER OF THIS SUBDIVISION AND HIS HEIRS, SUCCESSORS AND ASSIGNS ASSUMES THE RESPONSIBILITY FOR PLANS FOR CONSTRUCTION OF ALL SUBDIVISION IMPROVEMENTS WHICH SHALL COMPLY WITH APPLICABLE CODES, RULES AND REGULATIONS AND REQUIREMENTS OF WILLIAMSON COUNTY, TEXAS AND THE TEXAS COMMISSION ON ENVIRONMENTAL QUALITY WHICH ARE IN EFFECT AND APPLICABLE AT THE TIME THE IMPROVEMENTS ARE DESIGNED AND CONSTRUCTED. THE OWNER UNDERSTANDS AND AGREES THAT PLAT VACATION AND REPLATTING MAY BE REQUIRED AT THE OWNERS SOLE EXPENSE IF PLANS TO CONSTRUCT THIS SUBDIVISION DO NOT COMPLY WITH SUCH CODES AND REQUIREMENTS.
14. WATER AND WASTEWATER SERVICE TO THIS SUBDIVISION WILL BE PROVIDED BY THE CITY OF JARRELL.
15. WATER AND WASTEWATER SYSTEMS SERVING THIS SUBDIVISION SHALL BE DESIGNED AND INSTALLED IN ACCORDANCE WITH THE DESIGN AND CONSTRUCTION STANDARDS OF THE TEXAS COMMISSION ON ENVIRONMENTAL QUALITY (TCEQ) OR WILLIAMSON COUNTY. PLANS AND SPECIFICATIONS SHALL BE SUBMITTED TO TCEQ AND OTHER AGENCIES AS APPROPRIATE AT THE TIME SUCH PLANS ARE PREPARED.
16. ALL STREETS ARE TO BE DEDICATED FOR PUBLIC USE.
17. THERE ARE NO CEMETERY SITES, EXISTING OR PROPOSED SCHOOL SITES OR OTHER PUBLIC SITES PROPOSED WITHIN THIS SUBDIVISION.
18. PUBLIC INFRASTRUCTURE ACCEPTANCE BY THE MUNICIPAL UTILITY DISTRICT FOR LOTS 130-139, BLOCK A WILL NOT BE ISSUED UNTIL THE FEMA FLOODPLAIN HAS BEEN REMOVED BY FEMA APPROVAL OF THE LOMR AND THE TEMPORARY DRAINAGE EASEMENT SHOWN HEREON HAS BEEN VACATED BY SEPARATE INSTRUMENT.
19. THE MINIMUM STREET CENTERLINE RADIUS SHALL BE 180 FEET FOR LOCAL STREETS AND (WITH THE EXCEPTION OF ALL AMERICAN WAY) 470 FEET FOR COLLECTOR STREETS. ALL AMERICAN WAY HAS BEEN PROVIDED WITH A MINIMUM STREET CENTERLINE RADIUS OF 300 FEET AND THE ASSOCIATED SPEED LIMIT REDUCED TO 30 MPH AT THIS ENTRANCE.
20. ALL LOTS SHALL BE A MINIMUM OF 30 FEET WIDE AS MEASURED 25 FEET FROM THE FRONT PROPERTY LINE.
21. CLUSTER MAILBOX LOCATIONS SHOWN ARE APPROXIMATE AND ARE SUBJECT TO CHANGE.
22. IF ANY SIDEWALKS ARE CONSTRUCTED IN THIS SUBDIVISION, THEY WILL BE MAINTAINED BY THE HOMEOWNER'S ASSOCIATION.
23. LOT 19, BLOCK R, LOT 50, BLOCK P, LOT 158, BLOCK M, AND LOT 62, BLOCK S ARE RESERVED FOR FUTURE RIGHT-OF-WAY DEDICATION, TO BE USED FOR THE FUTURE EXPANSION OF COUNTY ROADS 237 AND 238 AND THE FUTURE CONSTRUCTION OF AN ARTERIAL ALONG THE WESTERN RANCHO DEL CIELO PROPERTY BOUNDARY. DEDICATION OF THESE ROW RESERVE LOTS TO WILLIAMSON COUNTY WILL BE COMPLETED BY SEPARATE INSTRUMENT.

STREET NAME	CLASSIFICATION	PAVEMENT WIDTH (LOG-LOG)	DESIGN SPEED	LENGTH
ALL AMERICAN WAY	COLLECTOR	37 FT	30 MPH	463 LF
THE GIPPER DRIVE	COLLECTOR	37 FT	35 MPH	501 LF
RANCHO DEL CIELO LANE	COLLECTOR	37 FT	35 MPH	969 LF
ALL AMERICAN WAY	LOCAL	30 FT	25 MPH	779 LF
BONZO COURT	LOCAL	30 FT	25 MPH	302 LF
BURT RAINEY LANE	LOCAL	30 FT	25 MPH	380 LF
CALIFORNIA BEND	LOCAL	30 FT	25 MPH	773 LF
CATTLE QUEEN COURT	LOCAL	30 FT	25 MPH	426 LF
CATTLE QUEEN ROAD	LOCAL	30 FT	25 MPH	3428 LF
COWPOKE DRIVE	LOCAL	30 FT	25 MPH	903 LF
DARK VICTORY ROAD	LOCAL	30 FT	25 MPH	682 LF
THE GIPPER DRIVE	LOCAL	30 FT	25 MPH	1184 LF
HASTY HEART COURT	LOCAL	30 FT	25 MPH	410 LF
HELLCATS WAY	LOCAL	30 FT	25 MPH	1034 LF
JACK BROWNING DRIVE	LOCAL	30 FT	25 MPH	587 LF
JONES BEACH COVE	LOCAL	30 FT	25 MPH	245 LF
JONES BEACH LANE	LOCAL	30 FT	25 MPH	1040 LF
KINGS ROW LANE	LOCAL	30 FT	25 MPH	1601 LF
KNUTE ROCKNE WAY	LOCAL	30 FT	25 MPH	1800 LF
LOUISA LANE	LOCAL	30 FT	25 MPH	1756 LF
RANCHO DEL CIELO LOOP	LOCAL	30 FT	25 MPH	4030 LF
ROWAN DRIVE	LOCAL	30 FT	25 MPH	128 LF
SERGEANT MURPHY ROAD	LOCAL	30 FT	25 MPH	591 LF
SLOANE COURT	LOCAL	30 FT	25 MPH	128 LF
TEXAS ANGEL WAY	LOCAL	30 FT	25 MPH	2095 LF
TUGBOAT ANNIE WAY	LOCAL	30 FT	25 MPH	788 LF

NOTE: ALL STREETS ARE CLASSIFIED AS PUBLIC AND URBAN.

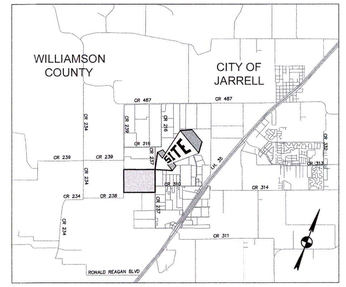

LOCATION MAP
NOT TO SCALE

LEGAL DESCRIPTION:

198.49 ACRES OUT OF THE
E. PARSONS SURVEY, ABSTRACT #494
WILLIAMSON COUNTY, TEXAS

OWNER / SUBDIVIDER:

LENNAR HOMES OF TEXAS LAND & CONSTRUCTION, LTD.
13620 N FM 620, BUILDING B, SUITE 150
AUSTIN, TEXAS 78717

ENGINEER:

PAPE-DAWSON CONSULTING ENGINEERS, LLC
10801 N. MOPAC EXPY
BUILDING 3, SUITE 200
AUSTIN, TEXAS 78759
PHONE: (512) 454-8711
FAX: (512) 459-8867
EMAIL: MFISHER@PAPE-DAWSON.COM

SURVEYOR:

PAPE-DAWSON CONSULTING ENGINEERS, LLC
10801 N. MOPAC EXPY
BUILDING 3, SUITE 200
AUSTIN, TEXAS 78759
PHONE: (512) 454-8711

LAND USE SUMMARY	NUMBER OF LOTS	ACRES
SINGLE FAMILY LOTS	961	122.47
RIGHT-OF-WAY	-	32.30
DRAINAGE/OPEN SPACE	6	39.14
ROW RESERVE	4	3.41
LANDSCAPE	10	1.17
COMMERCIAL	-	-
TOTAL	981	198.49

THIS DOCUMENT IS RELEASED FOR REVIEW PURPOSES ONLY UNDER THE AUTHORITY OF MICHAEL S. FISHER, P.E. 87704 ON MAY 24, 2024. IT IS NOT TO BE USED FOR BIDDING, CONSTRUCTION OR PERMITTING PURPOSES. 137.33(e)

NO.	REVISION	DATE
1	PHASE 5 LAYOUT UPDATED	07/26/24
2	PHASE 5 LAYOUT UPDATED	08/23/24

NO.	REVISION	DATE

PAPE-DAWSON ENGINEERS
AUSTIN | SAN ANTONIO | HOUSTON | FORT WORTH | DALLAS
10801 N. MOPAC EXPY, BLDG 3, STE 200 | AUSTIN, TX 78759 | 512.454.8711
TBPE FIRM REGISTRATION #470 | TBPLS FIRM REGISTRATION #10028801

RANCHO DEL CIELO
JARRELL, TEXAS
PRELIMINARY PLAT OVERALL - 1 OF 3

CITY NO. ____
JOB NO. 51006-03
DATE MAY 2019
DESIGNER EV
CHECKED JF DRAWN EV
SHEET 2 OF 8

PAPE-DAWSON ENGINEERS
AUSTIN | SAN ANTONIO | HOUSTON | FORT WORTH | DALLAS
10801 N. MOPAC EXPY, BLDG 3, STE 200 | AUSTIN, TX 78759 | 512.454.8711
TBPE FIRM REGISTRATION #470 | TBPLS FIRM REGISTRATION #10028801

RANCHO DEL CIELO - PHASE 4B
WILLIAMSON COUNTY, TEXAS
PRELIMINARY PLAT 1 OF 3

CITY JOB No. ____
JOB NO. 51118-61
DATE SEPTEMBER 2024
DESIGNER TS
CHECKED ____ DRAWN CE/JM
SHEET 2 OF 36

Date: Jul 26, 2024, 10:08am User ID: jessmesa
File: H:\Projects\51\06\03\02\Preliminary\Civil\PS\51006-03.dwg

Date: Sep 24, 2024, 3:54pm User ID: tstephens
File: H:\Projects\51\18\60_Phase 5\30\ Construction Documents\Civil\PS\51118-61.dwg

THIS DOCUMENT HAS BEEN PRODUCED FROM MATERIAL THAT WAS STORED AND/OR TRANSMITTED ELECTRONICALLY AND MAY HAVE BEEN INADVERTENTLY ALTERED. RELY ONLY ON FINAL HARDCOPY MATERIALS BEARING THE CONSULTANT'S ORIGINAL SIGNATURE AND SEAL.

THIS DOCUMENT HAS BEEN PRODUCED FROM MATERIAL THAT WAS STORED AND/OR TRANSMITTED ELECTRONICALLY AND MAY HAVE BEEN INADVERTENTLY ALTERED. RELY ONLY ON FINAL HARDCOPY MATERIALS BEARING THE CONSULTANT'S ORIGINAL SIGNATURE AND SEAL.

Date: Sep 24, 2024, 3:55pm User ID: tstephens
File: H:\Projects\511\18\60_Phase 5\301 Construction Documents\Civil\FP51118-61.dwg

Date: Jul 26, 2024, 10:09am User ID: jessemesa
File: H:\Projects\510\06\03\212 Preliminary\Civil\PP51006-03.dwg

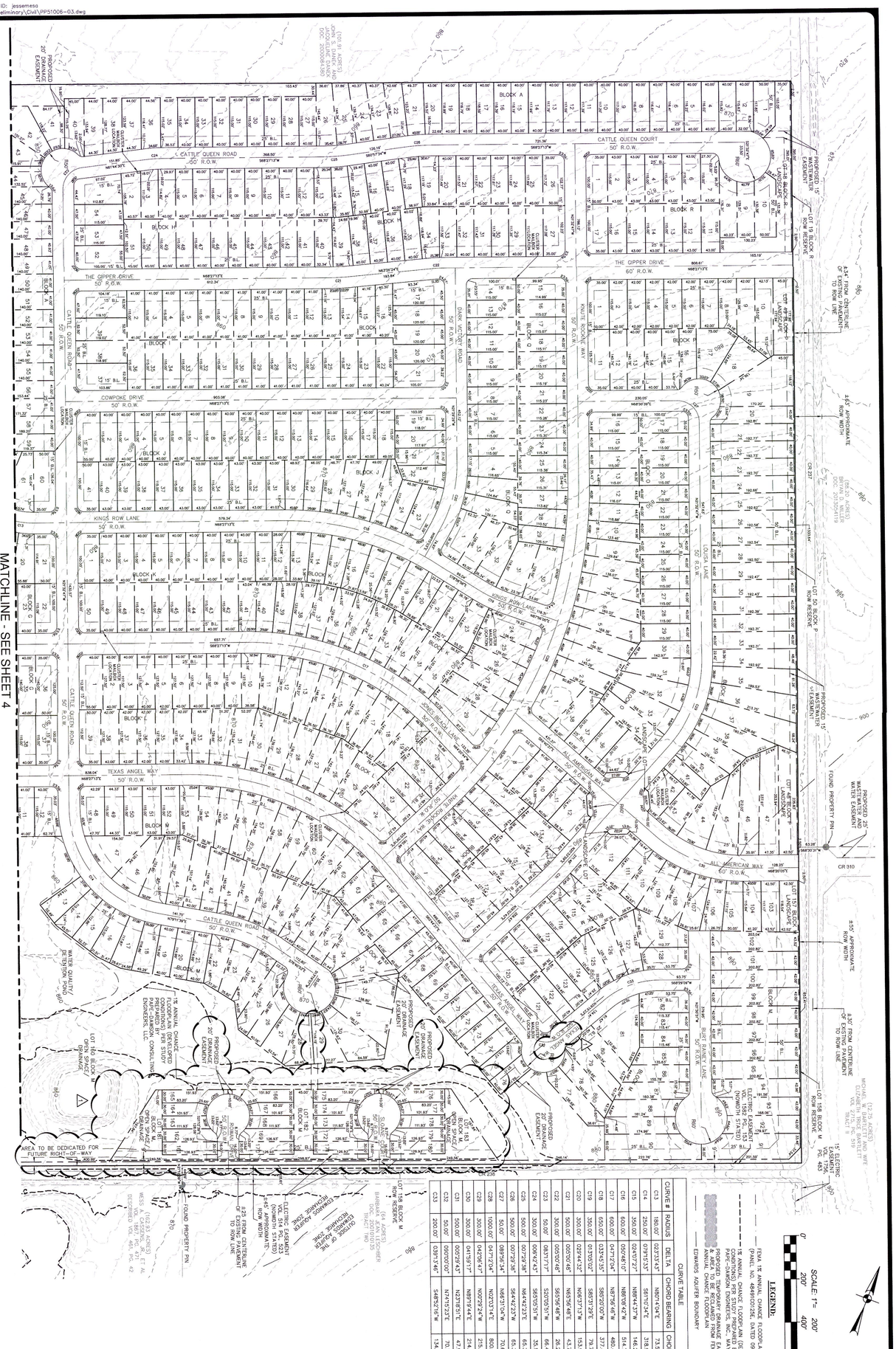

CURVE #	RADIUS	DELTA	CHORD BEARING	CHORD	LENGTH
C13	180.00'	022733"43"	N68°14'34"E	73.50'	74.00'
C14	250.00'	079°15'33"	S81°10'34"E	318.97'	345.83'
C15	300.00'	024°27'27"	N68°14'37"W	146.28'	147.37'
C16	600.00'	009°48'10"	N68°06'40"W	102.57'	102.69'
C17	600.00'	014°12'24"	N78°36'36"W	148.37'	148.77'
C18	550.00'	032°10'02"	S83°37'39"W	304.70'	308.88'
C19	350.00'	032°10'02"	S83°37'39"W	193.93'	196.50'
C20	300.00'	020°04'48"	N83°54'48"E	104.57'	105.13'
C21	300.00'	020°04'48"	N63°49'59"E	104.57'	105.13'
C22	300.00'	020°04'48"	N43°45'11"E	104.57'	105.13'
C23	300.00'	020°04'48"	N23°40'23"E	104.57'	105.13'
C24	300.00'	009°43'43"	S05°05'31"W	50.87'	50.93'
C25	300.00'	020°09'26"	S19°44'23"E	104.45'	105.50'
C26	300.00'	020°09'26"	S39°54'23"E	104.45'	105.50'
C27	50.00'	089°56'34"	N83°03'10"W	70.68'	78.49'
C28	1000.00'	047°12'04"	N02°01'14"E	800.71'	823.81'
C29	300.00'	042°06'47"	N00°29'22"W	215.57'	220.50'
C30	300.00'	041°53'37"	N89°19'44"E	214.96'	219.85'
C31	500.00'	000°29'43"	N23°18'29"E	4.32'	4.32'
C32	50.00'	090°00'00"	N74°15'23"E	70.71'	78.54'
C33	200.00'	039°51'46"	S48°52'16"W	134.28'	136.94'

LEGEND:
- EDWARDS AQUIFER BOUNDARY
- FEMA 1% ANNUAL CHANCE FLOODPLAIN (FLOODPLAIN (PANEL NO. 48491C0125E, DATED 09/26/2008)
- 1% ANNUAL CHANCE FLOODPLAIN (DEVELOPED CONDITIONS PER STUDY PREPARED BY PAPE-DAWSON ENGINEERS, LLC, DATED MAY 2019
- PROPOSED TEMPORARY DRAINAGE EASEMENT
- 1% ANNUAL CHANCE FLOODPLAIN FEMA 1%

THIS DOCUMENT IS RELEASED FOR INTERIM REVIEW PURPOSES, ONLY UNDER THE AUTHORITY OF MICHAEL S. FISHER, P.E. 87704 DATE: July 26, 2024 IT IS NOT TO BE USED FOR BIDDING, CONSTRUCTION OR PERMITTING PURPOSES, PER T.E.P.A. 137.33(e)

NO.	REVISION	DATE
1	PHASE 5 LAYOUT UPDATED	07/25/24

CITY JOB No. 51006-03
DATE MAY 2019
DESIGNER EV
CHECKED JF DRAWN EV
SHEET 3 OF 8

RANCHO DEL CIELO
JARRELL, TEXAS

PRELIMINARY PLAT - 2 OF 3

PAPE-DAWSON ENGINEERS
AUSTIN | SAN ANTONIO | HOUSTON | FORT WORTH | DALLAS
10801 N MOPAC EXPY, BLDG 3, STE 200 | AUSTIN, TX 78759 | 512.454.8711
TBPE FIRM REGISTRATION #470 | TBPLS FIRM REGISTRATION #10028801

THIS DOCUMENT WAS EITHER PRODUCED FOR REVIEW, MAY NOT BE COMPLETE, AND/OR MODIFIED ELECTRONICALLY AND MAY HAVE BEEN INCIDENTALLY ALTERED. BUT ONLY ON FINAL HARDCOPY BEARING THE CONSULTANT'S ORIGINAL SIGNATURE AND SEAL.

CITY JOB No. 51118-61
DATE SEPTEMBER 2024
DESIGNER TS
CHECKED DRAWN CS/JM
SHEET 3 OF 36

RANCHO DEL CIELO - PHASE 4B
WILLIAMSON COUNTY, TEXAS

PRELIMINARY PLAT 2 OF 3

PAPE-DAWSON ENGINEERS
AUSTIN | SAN ANTONIO | HOUSTON | FORT WORTH | DALLAS
10801 N MOPAC EXPY, BLDG 3, STE 200 | AUSTIN, TX 78759 | 512.454.8711
TBPE FIRM REGISTRATION #470 | TBPLS FIRM REGISTRATION #10028801

NO.	REVISION	DATE

Date: Sep 24, 2024, 3:55pm User ID: tstephens
File: H:\Projects\511\18\60_Phase 5\301 Construction Documents\Civil\FP51118-61.dwg

Date: Jul 26, 2024, 10:09am User ID: jessemeso
File: H:\Projects\510\06\03\212 Preliminary\Civil\FP51006-03.dwg

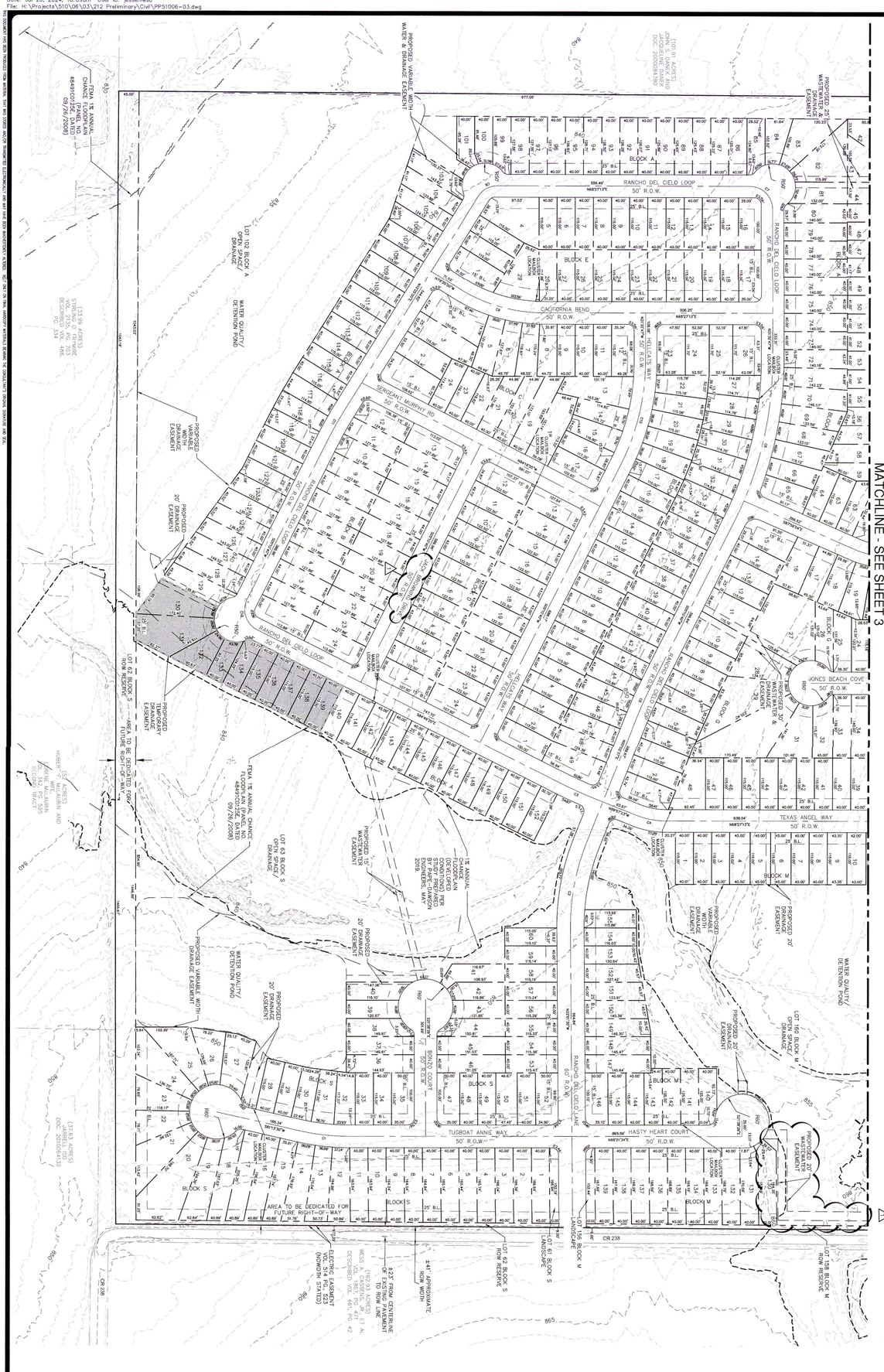

CURVE TABLE					
CURVE #	RADIUS	DELTA	CHORD BEARING	CHORD	LENGTH
C1	500.00'	012°51'55"	N74°47'32"E	112.04'	112.27'
C2	500.00'	022°04'07"	S10°59'27"E	191.40'	192.56'
C3	10000.00'	000°38'03"	S87°23'22"E	89.58'	89.61'
C4	180.00'	027°35'24"	N79°14'55"E	67.43'	67.83'
C5	10000.00'	000°38'03"	S52°36'38"W	89.58'	89.61'
C6	800.00'	026°43'27"	N08°11'04"W	369.77'	373.14'

CURVE TABLE					
CURVE #	RADIUS	DELTA	CHORD BEARING	CHORD	LENGTH
C7	50.00'	090°00'00"	N66°32'47"W	70.71'	78.54'
C8	50.00'	059°02'13"	S39°26'06"W	46.51'	50.63'
C9	350.00'	031°57'47"	N84°26'09"E	192.73'	195.25'
C10	500.00'	026°43'27"	N08°11'04"W	231.10'	233.21'
C11	10000.00'	000°38'03"	S07°47'35"W	91.40'	91.44'
C12	50.00'	090°00'00"	S39°49'29"E	70.71'	78.54'

LEGEND:

- FEMA TE ANNUAL CHANCE FLOODPLAIN
- TE ANNUAL CHANCE FLOODPLAIN (DEVELOPED CONDITION) PER STUDY PREPARED BY BLACKBURN ENGINEERING DATED 2015
- PROPOSED TEMPORARY DRAINAGE EASEMENT & AREA TO BE RECLAIMED FROM FEMA TE ANNUAL CHANCE FLOODPLAIN
- EDWARDS AQUIFER BOUNDARY

SHEET	4	OF	8

CITY NO.
JOB NO. 51006-03
DATE MAY 2019
DESIGNER EV
CHECKED JF DRAWN CV

RANCHO DEL CIELO
JARRELL, TEXAS

PRELIMINARY PLAT - 3 OF 3

PAPE-DAWSON ENGINEERS

AUSTIN | SAN ANTONIO | HOUSTON | FORT WORTH | DALLAS
10801 N MOPAC EXPY, BLDG 3, STE 200 | AUSTIN, TX 78759 | 512.454.8711
TBPE FIRM REGISTRATION #470 | TBPLS FIRM REGISTRATION #10028801

THIS DOCUMENT IS RELEASED FOR INTERIM REVIEW PURPOSES ONLY UNDER THE AUTHORITY OF MICHAEL S. FISHER, P.E. 87704
DATE: July 26, 2024
IT IS NOT TO BE USED FOR BIDDING, CONSTRUCTION OR PERMITTING PURPOSES, PER T.E.P.A. 137.33(e)

NO.	REVISION	DATE
1	PHASE 5 LAYOUT UPDATED	07/26/24

SHEET	4	OF	36

CITY JOB No.
JOB NO. 51118-51
DATE SEPTEMBER 2024
DESIGNER TS
CHECKED DRAWN/CE/JM

RANCHO DEL CIELO - PHASE 4B
WILLIAMSON COUNTY, TEXAS

PRELIMINARY PLAT 3 OF 3

PAPE-DAWSON ENGINEERS

AUSTIN | SAN ANTONIO | HOUSTON | FORT WORTH | DALLAS
10801 N MOPAC EXPY, BLDG 3, STE 200 | AUSTIN, TX 78759 | 512.454.8711
TBPE FIRM REGISTRATION #470 | TBPLS FIRM REGISTRATION #10028801

NO.	REVISION	DATE

THIS DOCUMENT HAS BEEN PRODUCED FROM MATERIAL THAT WAS CREATED AND/OR STORED ELECTRONICALLY AND MAY HAVE BEEN INADVERTENTLY ALTERED. NOT PART OF FINAL HARDCOPY MATERIALS. PAPE-DAWSON ENGINEERS, INC.

WILLIAMSON COUNTY GENERAL CONSTRUCTION NOTES

4.1 A PRECONSTRUCTION MEETING WILL BE SCHEDULED PRIOR TO THE START OF CONSTRUCTION. THE DESIGN ENGINEER, OWNER, CONTRACTOR, SUBCONTRACTORS, AND THE COUNTY ENGINEER SHALL ATTEND THIS MEETING. ALL ROADS ARE TO BE CONSTRUCTED IN ACCORDANCE WITH THE SPECIFICATIONS FOUND IN THE CURRENT VERSION OF THE TEXAS DEPARTMENT OF TRANSPORTATION MANUAL STANDARD SPECIFICATIONS FOR CONSTRUCTION OF HIGHWAYS, STREETS, AND BRIDGES UNLESS OTHERWISE STATED ON THE CONSTRUCTION DOCUMENTS APPROVED BY THE COUNTY ENGINEER.

4.2 ALL MATERIALS SHALL BE SAMPLED AND TESTED BY AN INDEPENDENT TESTING LABORATORY IN ACCORDANCE WITH THE CONSTRUCTION DOCUMENTS APPROVED BY THE COUNTY ENGINEER. THE OWNER SHALL PAY FOR ALL TESTING SERVICES AND SHALL FURNISH THE COUNTY ENGINEER WITH CERTIFIED COPIES OF THESE TEST RESULTS. THE COUNTY ENGINEER MUST APPROVE THE TEST RESULTS PRIOR TO CONSTRUCTING THE NEXT COURSE OF THE ROADWAY STRUCTURE. ANY MATERIAL WHICH DOES NOT MEET THE MINIMUM REQUIRED TEST SPECIFICATIONS SHALL BE REMOVED AND RECOMPACTED OR REPLACED UNLESS ALTERNATIVE REMEDIAL ACTION IS APPROVED IN WRITING FROM THE COUNTY ENGINEER.

4.3 EXCEPT FOR ELECTRICAL LINES, ALL UNDERGROUND NONFERROUS UTILITIES WITHIN A RIGHT-OF-WAY OR EASEMENT MUST BE ACCOMPANIED BY FERROUS METAL LINES TO AID IN TRACING THE LOCATION OF SAID UTILITIES THROUGH THE USE OF A METAL DETECTOR.

4.4 ALL PAVEMENTS ARE TO BE DESIGNED BY A REGISTERED PROFESSIONAL ENGINEER. THE DESIGN SHALL BE BASED ON A 20-YEAR DESIGN LIFE AND IN CONJUNCTION WITH RECOMMENDATIONS BASED ON A SOILS REPORT OF SAMPLES TAKEN ALONG THE PROPOSED ROADWAYS. TEST BORINGS SHALL BE PLACED AT A MAXIMUM SPACING OF 500 FEET OR OTHER SAMPLING FREQUENCY APPROVED BY THE COUNTY ENGINEER BASED ON RECOMMENDATIONS PROVIDED BY THE GEOTECHNICAL ENGINEER. THE SOILS REPORT AND PAVEMENT DESIGN SHALL BE SUBMITTED TO THE COUNTY ENGINEER FOR REVIEW. THE PAVEMENT DESIGN MUST BE APPROVED BY THE COUNTY ENGINEER PRIOR TO OR CONCURRENTLY WITH THE REVIEW AND APPROVAL OF THE CONSTRUCTION PLANS. IN ADDITION TO THE BASIS OF THE PAVEMENT DESIGN, THE SOILS REPORT SHALL CONTAIN THE RESULTS OF SAMPLED AND TESTED SUBGRADE FOR PLASTICITY INDEX, PH, SULFATE CONTENT, AND MAXIMUM DENSITY.

B5. SUBGRADE

5.1 THE PREPARATION OF THE SUBGRADE SHALL FOLLOW GOOD ENGINEERING PRACTICES AS DIRECTED BY THE COUNTY ENGINEER IN CONJUNCTION WITH RECOMMENDATIONS OUTLINED IN THE GEOTECHNICAL REPORT. WHEN THE PLASTICITY INDEX (PI) IS GREATER THAN 20, A SUFFICIENT AMOUNT OF LIME SHALL BE ADDED AS DESCRIBED IN ITEM 260 OF THE CURRENT EDITION OF THE TxDOT STANDARD SPECIFICATIONS FOR CONSTRUCTION UNTIL THE PI IS LESS THAN 20. IF THE ADDITION OF LIME AS DESCRIBED IN ITEM 260 IS NOT FEASIBLE, AN ALTERNATE STABILIZING DESIGN SHALL BE PROPOSED AND SUBMITTED TO THE COUNTY ENGINEER FOR APPROVAL. THE SUBGRADE SHALL BE PREPARED AND COMPACTED TO ACHIEVE A DRY DENSITY PER TxDOT ITEM 132. IN ADDITION, PROOF ROLLING MAY BE REQUIRED BY THE COUNTY ENGINEER.

5.2 THE SUBGRADE SHALL BE INSPECTED AND APPROVED BY AN INDEPENDENT TESTING LABORATORY AND A CERTIFIED COPY OF ALL INSPECTION REPORTS FURNISHED TO THE COUNTY ENGINEER, WHO MUST APPROVE THE REPORT PRIOR TO APPLICATION OF THE BASE MATERIAL. ALL DENSITY TEST REPORTS SHALL INCLUDE A COPY OF THE WORK SHEET SHOWING THE PERCENTAGE OF THE MAXIMUM DRY (PROCTOR) DENSITY. THE NUMBER AND LOCATION OF ALL SUBGRADE TESTS SHALL BE DETERMINED BY THE COUNTY ENGINEER.

B6. BASE MATERIAL

6.1 BASE MATERIAL SHALL CONFORM TO ITEM 247 OF THE CURRENT EDITION OF THE TxDOT STANDARD SPECIFICATIONS FOR CONSTRUCTION, "FLEXIBLE BASE". THE BASE MATERIAL SHALL BE TYPE A GRADE A, TYPE A GRADE 2, OR AS APPROVED BY THE COUNTY ENGINEER.

6.2 EACH LAYER OF BASE COURSE SHALL BE TESTED FOR IN-PLACE DRY DENSITY AND MEASURED FOR COMPACTED THICKNESS. THE NUMBER AND LOCATION OF ALL BASE TEST SAMPLES SHALL BE DETERMINED BY THE COUNTY ENGINEER.

6.3 THE BASE SHALL BE PREPARED AND COMPACTED TO ACHIEVE A MINIMUM OF 100% OF THE MAXIMUM (PROCTOR) DENSITY OR AS APPROVED BY THE COUNTY ENGINEER UPON RECOMMENDATION BY THE TESTING LABORATORY. THE MAXIMUM LIFT SHALL NOT EXCEED SIX INCHES. THE BASE MUST BE INSPECTED AND APPROVED BY AN INDEPENDENT TESTING LABORATORY AND A CERTIFIED COPY OF THE TEST RESULTS FURNISHED TO THE COUNTY ENGINEER FOR APPROVAL. PRIOR TO THE PLACEMENT OF THE FIRST LIFT OF BASE, THE STOCKPILE SHALL BE TESTED FOR THE SPECIFICATIONS FOUND IN ITEM 247 TABLE 1 AND THE RESULT FURNISHED TO THE COUNTY ENGINEER FOR APPROVAL.

B7. WEARING SURFACE

7.1 URBAN ROADS REQUIRE A MINIMUM 2" WEARING SURFACE OF TxDOT HMAC TYPE D. THE MIX SHALL BE FROM A TXDOT CERTIFIED PLANT. THE MIX DESIGN SHALL BE SUBMITTED TO THE COUNTY ENGINEER FOR APPROVAL PRIOR TO PLACEMENT OF THE MATERIAL. CONTRACTOR'S QUALITY CONTROL (QQC) TEST REPORTS SHALL BE SUBMITTED TO THE COUNTY ENGINEER ON A DAILY BASIS. AS A MINIMUM, DAILY QQC TESTING OF THE PRODUCED MIX SHALL INCLUDE: SIEVE ANALYSIS TEX-200-F, ASPHALT CONTENT TEX-210-F, HVEEM STABILITY TEX-208-F, LABORATORY COMPACTED DENSITY TEX-207-F. AND MAXIMUM SPECIFIC GRAVITY TEX-227-F. THE NUMBER AND LOCATION OF ALL HMAC TESTS SHALL BE DETERMINED BY THE COUNTY ENGINEER WITH A MINIMUM OF THREE, 6-INCH DIAMETER FIELD CORES SECURED AND TESTED BY THE CONTRACTOR FROM EACH DAY'S PAVING. THE NUMBER AND LOCATION OF ALL HMAC TEST SAMPLES SHALL BE DETERMINED BY THE COUNTY ENGINEER.

7.2 RURAL ROADS MAY USE EITHER THE SPECIFICATIONS FOUND IN B7.1 OR A TWO-COURSE SURFACE IN ACCORDANCE WITH ITEM 316, TREATMENT WEARING SURFACE, OF THE CURRENT EDITION OF THE TxDOT STANDARD SPECIFICATIONS FOR CONSTRUCTION. THE TYPE AND RATE OF ASPHALT AND AGGREGATE SHALL BE INDICATED ON THE PLANS AS A BASIS OF ESTMATE AND SHALL BE DETERMINED AT THE PRECONSTRUCTION CONFERENCE. AGGREGATE USED IN THE MIX SHALL BE ON THE TxDOT QUALITY MONITORING SCHEDULE. AGGREGATE SHALL BE TYPE B GRADE 4. GRADATION TESTS SHALL BE REQUIRED FOR EACH 300 CUBIC YARDS OF MATERIAL PLACED WITH A MINIMUM OF TWO TESTS PER EACH GRADE PER EACH PROJECT. TEST RESULTS SHALL BE REVIEWED BY THE COUNTY ENGINEER PRIOR TO APPLICATION OF THE MATERIAL.

B8. CONCRETE PAVEMENT

8.1 IN LIEU OF BITUMINOUS PAVEMENT, PORTLAND CEMENT CONCRETE PAVEMENT MAY BE USED. IN SUCH CASES, THE PAVEMENT THICKNESS SHALL BE A MINIMUM OF 9 INCHES OF CONCRETE, AND SHALL BE JOINTED AND REINFORCED IN ACCORDANCE WITH THE DETAIL INCLUDED IN APPENDIX J. THE MIX SHALL BE FROM A TxDOT CERTIFIED PLANT. THE MIX DESIGN SHALL BE SUBMITTED TO THE COUNTY ENGINEER FOR APPROVAL PRIOR TO PLACEMENT OF THE MATERIAL.

B9. CONCRETE - GENERAL

9.1 UNLESS OTHERWISE SPECIFIED, CONCRETE SHALL BE IN ACCORDANCE WITH ITEM 421 OF THE CURRENT EDITION OF THE TxDOT STANDARD SPECIFICATIONS FOR CONSTRUCTION AND BE PLACE IN ACCORDANCE WITH THE APPLICABLE ITEM.

9.2 ALL CONCRETE SHALL BE TESTED FOR COMPRESSIVE STRENGTH. ONE SET OF THREE CONCRETE TEST CYLINDERS SHALL BE MOLDED FOR EVERY 50 CUBIC YARDS OF CONCRETE PLACED FOR EACH CLASS OF CONCRETE PER DAY, OR AT ANY OTHER INTERVAL AS DETERMINED BY THE COUNTY ENGINEER. A SLUMP TEST SHALL BE REQUIRED WITH EACH SET OF OF TEST CYLINDERS. ONE CYLINDER SHALL BE TESTED FOR COMPRESSIVE STRENGTH AT AN AGE OF SEVEN DAYS AND THE REMAINING TWO CYLINDERS SHALL BE TESTED AT 28 DAYS OF AGE.

CONSTRUCTION SEQUENCE

1. INSTALL ALL TEMPORARY EROSION CONTROL DEVICES (SILT FENCE, ROCK BERMS, ETC.)
2. CLEAR VEGETATION FROM SITE.
3. ROUGH CUT ALL REQUIRED OR NECESSARY PONDS. INSTALL TEMPORARY SEDIMENT POND AS APPROPRIATE.
4. ROUGH CUT STREETS TO SUBGRADE.
5. INSTALL WASTEWATER LINES AND APPURTENANCES.
6. INSTALL WATER LINES AND APPURTENANCES.
7. INSTALL STORM SEWER PIPES, DRAINAGE CHANNELS, DRAINAGE STRUCTURES, INLETS. ETC.
8. RE-GRADE STREETS TO PROPOSED SUBGRADE (ANY FILL MATERIAL SHALL BE TESTED PRIOR TO PLACEMENT AND HAVE A P.I. LESS THAN 20).
9. INSTALL FIRST COURSE BASE MATERIAL
10. INSTALL CURB AND GUTTER, CONCRETE VALLEY GUTTERS, ETC.
11. INSTALL SECOND COURSE BASE MATERIAL
12. INSTALL STREET PAVEMENT.
13. INSTALL STREET SIGNAGE, STREET END BARRICADES, ETC.
14. ESTABLISH REVEGETATION IN ALL DISTURBED AREAS.
15. REMOVE TEMPORARY EROSION CONTROL DEVICES.

TRENCH SAFETY NOTES:

1. ALL CONSTRUCTION OPERATIONS SHALL BE ACCOMPLISHED IN ACCORDANCE WITH APPLICABLE REGULATIONS OF THE U.S. OCCUPATIONAL SAFETY AND HEALTH ADMINISTRATION.

2. ALL TRENCH CONSTRUCTION SHALL BE CONDUCTED IN ACCORDANCE WITH 'SAFETY AND HEALTH" REGULATIONS CONTAINED IN SUBPART P OF PART 1926 OF THE CODE OF FEDERAL REGULATIONS.

3. IN ACCORDANCE WITH THE LAWS OF THE STATE OF TEXAS AND THE U.S. OCCUPATIONAL SAFETY AND HEALTH ADMINISTRATION REGULATIONS, ALL TRENCHES OVER FIVE (5) FT. IN DEPTH IN EITHER HARD AND COMPACT OR SOFT AND UNSTABLE SOIL SHALL BE SLOPED, SHORED, SHEETED, BRACED OR OTHERWISE SUPPORTED. FURTHERMORE, ALL TRENCHES LESS THAN FIVE FEET IN DEPTH SHALL BE EFFECTIVELY PROTECTED WITH HAZARDOUS GROUND MOVEMENT MAY BE EXPECTED. TRENCH SAFETY SYSTEMS TO BE UTILIZED FOR THIS PROJECT SHALL BE PREPARED BY A REGISTERED PROFESSIONAL ENGINEER AND PROVIDED BY THE CONTRACTOR AT HIS EXPENSE.

4. IN ACCORDANCE WITH U.S. OCCUPATIONAL SAFETY AND HEALTH ADMINISTRATION REGULATIONS, WHEN EMPLOYEES ARE REQUIRED TO BE IN TRENCHES FOUR FT. DEEP OR MORE, ADEQUATE MEANS OF EXIT, SUCH AS A LADDER OR STEPS, MUST BE PROVIDED AND LOCATED SO AS TO REQUIRE NO MORE THAN 25 FT. OF LATERAL TRAVEL.

5. IF TRENCH SAFETY SYSTEM DETAILS WERE NOT PROVIDED IN THE PLANS BECAUSE TRENCHES WERE EXPECTED TO BE LESS THAN FIVE FT. IN DEPTH AND, DURING CONSTRUCTION, IT IS FOUND THAT TRENCHES ARE, IN FACT, FIVE FT. OR MORE IN DEPTH OR TRENCHES ARE LESS THAN FIVE FT. IN DEPTH IN AN AREA WHERE HAZARDOUS GROUND MOVEMENT IS EXPECTED, ALL CONSTRUCTION SHALL CEASE, THE TRENCHED AREA SHALL BE BARRICADED AND THE ENGINEER SHALL BE NOTIFIED IMMEDIATELY. CONSTRUCTION SHALL NOT RESUME UNTIL APPROPRIATE TRENCH SAFETY SYSTEM DETAILS ARE PREPARED BY A REGISTERED PROFESSIONAL ENGINEER, ARE SUBMITTED TO AND ACCEPTED BY THE OWNER, AND A BID ITEM FOR IMPLEMENTATION OF TRENCH SAFETY SYSTEMS IS ADDED TO THE CONTRACT BY CHANGE ORDER.

GENERAL NOTES

1. LOCATION AND DEPTH OF EXISTING UTILITIES SHOWN HEREON ARE APPROXIMATE ONLY. ACTUAL LOCATIONS AND DEPTHS MUST BE VERIFIED BY THE CONTRACTOR PRIOR TO THE CONSTRUCTION AND THE CONTRACTOR SHALL BE RESPONSIBLE FOR THE PROTECTION OF SAME DURING CONSTRUCTION.

2. SITE CONTRACTOR IS RESPONSIBLE FOR CLEARING THE SITE OF ALL OBSTRUCTIONS THAT EXIST ON THIS SITE PRIOR TO THE START OF CONSTRUCTION OR DURING THE CONSTRUCTION SO AS TO NOT TO INTERFERE WITH HOME CONSTRUCTION.

3. ALL EXISTING ITEMS WITHIN PROJECT AREA TO BE REMOVED UNLESS OTHERWISE NOTED. CONTRACTOR IS RESPONSIBLE FOR REPLACING EXISTING ITEMS REMOVED DURING DEMOLITION THAT WERE TO REMAIN.

4. CONTRACTOR IS RESPONSIBLE FOR COORDINATION WITH ALL UTILITY COMPANIES REGARDING REMOVAL OF EXISTING SERVICES, VERIFYING UTILITIES ARE SHUT OFF OR DISCONNECTED AND ALL POSSIBLE SAFETY PRECAUTIONS HAVE BEEN ENACTED TO ENSURE THE SAFEST ENVIRONMENT FOR ALL PERSONNEL.

5. ALL AREAS DISTURBED BY CONSTRUCTION SHALL BE SEEDED AND REVEGETATED AFTER CONSTRUCTION IS COMPLETE. CONTRACTOR SHALL BE RESPONSIBLE FOR ESTABLISHING VEGETATION IN ALL DISTURBED AREAS BY PERIODIC WATERING OR OTHER ACCEPTABLE MEANS.

6. CONTRACTOR SHALL BE RESPONSIBLE FOR ACQUIRING ALL NECESSARY PERMITS/APPROVALS BEFORE BEGINNING CONSTRUCTION.

7. ALL GRADES AND CONTOURS SHOWN ARE FINAL, TOP OF FINISH SURFACE ELEVATIONS, UNLESS OTHERWISE NOTED.

8. POSITIVE DRAINAGE SHALL BE MAINTAINED ON ALL SURFACE AREAS WITHIN THE SCOPE OF THIS PROJECT. DRAINAGE SHALL BE DIRECTED AWAY FROM ALL BUILDING FOUNDATIONS. CONTRACTOR TO TAKE PRECAUTIONS NOT TO ALLOW ANY PONDING OF WATER.

9. CONTRACTOR TO OBTAIN GRADES SHOWN HEREON +/- ONE-TENTH (0.10') FOOT.

10. ALL DISTURBED AREAS SHALL BE REVEGETATED IN ACCORDANCE WITH THE PROJECT SPECIFICATIONS.

11. ALL EARTHEN SLOPES SHALL BE A MAXIMUM OF 3:1 AND A MINIMUM OF 2.0% UNLESS OTHERWISE NOTED.

12. CONTRACTOR TO AVOID INSTALLATION OF IMPROVEMENTS WITHIN THE ROADWAY OVERBUILD, INCLUDING BUT NOT LIMITED TO IRRIGATION, PLANTINGS, AND SILT FENCE.

13. ALL MATERIALS AND CONSTRUCTION PROCEDURES WITHIN THE SCOPE OF THIS CONTRACT WHERE NOT SPECIFICALLY COVERED IN THE PROJECT SPECIFICATIONS SHALL CONFORM TO ALL APPLICABLE LOCAL. CODES AND TEXAS DEPARTMENT OF TRANSPORTATION STANDARD SPECIFICATIONS (LATEST EDITION).

14. CONTRACTOR SHALL BE RESPONSIBLE FOR RESTORING ANY DAMAGES DONE TO EXISTING BUILDINGS, UTILITIES, FENCES, PAVEMENT, CURBS OR DRIVEWAYS TO ITS ORIGINAL, OR BETTER, CONDITION.

15. CONTRACTOR SHALL IMMEDIATELY NOTIFY THE ENGINEER OF ANY QUESTIONS THAT MAY ARISE CONCERNING THE INTENT, PLACEMENT, OR LIMITS OF DIMENSIONS OR GRADES NECESSARY FOR CONSTRUCTION OF THIS PROJECT.

16. TREE PROTECTION SHALL BE INSTALLED IN ACCORDANCE WITH PROJECT PLANS AND SPECIFICATIONS.

17. ALL EXCAVATION IS UNCLASSIFIED.

18. ANY FILL TO BE PLACED IN EXCESS OF 8 INCHES DEEP SHALL BE PLACED IN CONFORMANCE WITH THE REQUIREMENTS OF FHA/HUD DATA SHEET 79G. A LETTER OF CERTIFICATION FROM A QUALIFIED GEOTECHNICAL ENGINEER SHALL BE PRESENTED UPON COMPLETION OF FILLING ACTIVITIES.

19. CONTRACTOR TO REFERENCE GEOTECHNICAL REPORT (INCLUDING ANY ADDENDUMS) AS PROVIDED BY OWNER.

20. CONTRACTOR IS REQUIRED TO HAVE A TCEQ TPDES PERMIT ISSUED BY TCEQ. A COPY OF THE PERMIT SHALL BE POSTED ON THE JOBSITE PER TCEQ REQUIREMENTS.

GENERAL UTILITY NOTES:

1. ALL MATERIALS AND CONSTRUCTION PROCEDURES WITHIN THE SCOPE OF THIS PROJECT SHALL CONFORM TO ALL APPLICABLE T.C.E.Q. SPECIFICATIONS (LATEST EDITION), THE CITY OF ROUND ROCK STANDARD SPECIFICATIONS AND RANCHO DEL CIELO M.U.D., AS WELL AS OTHER SAFETY CODES AND INSPECTION PROVISIONS APPLICABLE TO THE PROJECT AND REQUIREMENTS OF THE RANCHO DEL CIELO MUNICIPAL UTILITY DISTRICT.

2. ALL WATER PIPE SHALL BE AWWA C-900 CLASS 200 (DR18). TRACER TAPE SHALL BE PLACED OVER ALL WATER MAINS.

3. ALL MAINS SHALL BE FLUSHED, HYDROSTATICALLY TESTED, AND DISINFECTED BY THE CONTRACTOR. AS PROVIDED FOR BY TCEQ STANDARD SPECIFICATIONS FOR CONSTRUCTION.

4. FOR PURPOSES OF RECORD DRAWINGS FOR RANCHO DEL CIELO MUNICIPAL UTILITY DISTRICT, THE CONTRACTOR AND THE DESIGN ENGINEER SHALL KEEP ACCURATE RECORDS OF ALL CONSTRUCTION THAT DEVIATES FROM THE PLANS. THE DESIGN ENGINEER SHALL FURNISH RANCHO DEL CIELO MUNICIPAL UTILITY DISTRICT ACCURATE "AS-BUILT" DRAWINGS FOLLOWING COMPLETION OF ALL CONSTRUCTION SHOWING SUCH DEVIATIONS.

5. THE LOCATIONS AND DEPTHS OF EXISTING UTILITIES SHOWN ON THESE PLANS ARE APPROXIMATE ONLY. ACTUAL LOCATIONS AND DEPTHS OF UTILITIES MUST BE VERIFIED BY THE CONTRACTOR PRIOR TO CONSTRUCTION. ANY DAMAGE TO EXISTING UTILITIES SHALL BE REPAIRED BY THE CONTRACTOR AT HIS EXPENSE.

6. ALL GARBAGE OR SPOIL MATERIAL FROM THIS WORK SHALL BE REMOVED FROM THE SITE BY THE CONTRACTOR, AT HIS EXPENSE.

7. FINAL CONNECTION TO THE EXISTING WATER MAIN SHALL NOT BE MADE UNTIL THE WATER MAIN HAS BEEN PRESSURE TESTED, CHLORINATED AND RANCHO DEL CIELO MUNICIPAL UTILITY DISTRICT RELEASES THE MAIN FOR TIE-IN AND USE.

8. UNIT PRICE BID FOR "STANDARD FIRE HYDRANT ASSEMBLY"SHALL INCLUDE FIRE HYDRANT, 6-INCH GATE VALVE AND 6-INCH VALVE BOX COMPLETE, ANCHOR BEND, NIPPLES, FITTINGS, AND ALL 6-INCH DI PIPE REQUIRED (DI PIPE REQUIRED SHALL INCLUDE ALL PIPE FROM THE TEE ON THE MAIN LINE TO THE FIRE HYDRANT.)

9. WHEN SEWER MAINS ARE INSTALLED IN THE VICINITY OF WATER MAINS, SUCH INSTALLATION SHALL BE IN STRICT ACCORDANCE WITH THE TEXAS COMMISSION ON ENVIRONMENTAL QUALITY "RULES AND REGULATIONS FOR PUBLIC WATER SYSTEMS" (1998 OR ANY REVISIONS THERETO).

10. All TRENCH BACKFILL FOR THIS PROJECT SHALL BE ACCOMPLISHED ACCORDING TO THE APPROPRIATE TRENCH DETAIL.

11. THE CONTRACTOR SHALL BE RESPONSIBLE FOR ACQUIRING ALL PERMITS, TESTS, APPROVALS AND ACCEPTANCES REQUIRED TO COMPLETE CONSTRUCTION OF THIS PROJECT.

12. ALL ITEMS NOT SPECIFICALLY CALLED FOR ON THE PLANS, OR IN THE SPECIFICATIONS, BUT NECESSARY TO REASONABLY CONSTRUCT THE FACILITY OR IMPROVEMENT, SHALL BE CONSIDERED INCIDENTAL TO THE OVERALL PROJECT AND NO SEPARATE PAYMENTS WILL BE MADE FOR THESE ITEMS.

13. CONTRACTOR TO GRADE SITE TO WITHIN +/- 0.10' BEFORE THE INSTALLATION OF UTILITIES TO ENSURE PROPER COVER IS ACHIEVED.

14. CONTRACTOR SHALL VERIFY THE EXACT LOCATION OF UNDERGROUND UTILITIES AND DRAINAGE STRUCTURES WHETHER SHOWN ON THE PLANS OR NOT.

15. THE CONTRACTOR SHALL NOTIFY THE GOVERNMENTAL AND/OR UTILITY COMPANIES REGARDING THE LOCATION OF EXISTING FACILITIES PRIOR TO CONSTRUCTION.

16. THE CONTRACTOR SHALL EXCAVATE AROUND EXISTING UTILITIES WHICH INTERSECT THE PROPOSED ALIGNMENT OF THE SERVICES AND NOTIFY THE ENGINEER OF POTENTIAL CONFLICTS, PRIOR TO ANY CONSTRUCTION IN THE AREA.

17. ALL DISTURBED AREAS WITHIN EASEMENTS AND TXDOT RIGHT-OF-WAY SHALL BE HYDRO-MULCHED IN ACCORDANCE WITH RANCHO DEL CIELO MUNICIPAL UTILITY DISTRICT AND TXDOT SPECIFICATIONS.

BENCHMARK #120 - SET CHISELED SQUARE ON CONCRETE HEADWALL ON THE NORTH SIDE OF COUNTY ROAD 238
GRID NORTHING: 10257996.4
GRID EASTING: 3141135.7
ELEV. 862.34 - NAVD 88 (GEOID 12A)

BENCHMARK #122 - SET 5/8" IRON ROD WITH RED CAP
GRID NORTHING: 10258437.1
GRID EASTING: 3139597.9
ELEV. 841.32 - NAVD 88 (GEOID 12A)

STREET AND DRAINAGE NOTES:

1. SEE PAVING DETAIL SHEET FOR TYPICAL STREET SECTIONS.
2. CONTRACTOR SHALL REMOVE AND DISPOSE OF ALL TREES WITHIN 15' OF PROPOSED PAVEMENT AND ALL DEAD TREES WITHIN STREET RIGHT-OF-WAY.
3. CONTRACTOR TO GRADE OR REGRADE ALL AREAS WITHIN RIGHT-OF-WAY INCLUDING DITCHES FOR POSITIVE DRAINAGE.
4. CONTRACTOR SHALL GRADE TO DRAIN AREAS UPSTREAM AND DOWNSTREAM OF ALL PROPOSED CULVERTS.
5. CONTRACTOR SHALL HYDROMULCH ALL DISTURBED AREAS, INCLUDING RIGHT-OF-WAY, STEEP SLOPES AND DRAINAGE DITCHES.
6. ALL STORM DRAIN PIPES ON THIS PROJECT SHALL BE REINFORCED CONCRETE (RCP CLASS III); OR DUAL WALL ADS N-12 HDPE WITH A CORRUGATED EXTERIOR AND SMOOTH INTERIOR MEETING THE REQUIREMENTS OF ASTM F2648 AND AASHTO M294 FOR USE IN GRAVITY FLOW DRAINAGE APPLICATIONS. ALL WYES, BENDS, PIPE SIZE CHANGES AND TRANSITIONS SHALL BE PREFABRICATED AND SHALL CONFORM TO ASTM F2306 AND AASHTO M294. ALL MATERIAL, INSTALLATION, COMPACTION, BEDDING, AND BACKFILL REQUIREMENTS AND PROCEDURES FOR DUAL WALL ADS N-12 HDPE USED ON THIS PROJECT SHALL ALSO BE IN ACCORDANCE WITH TXDOT SPECIAL SPECIFICATION 4122 (REF. TXDOT SPECIAL SPECIFICATION 4122 PROVIDED ON SHEET 92).
7. ALL SIGNAGE SHALL BE IN ACCORDANCE WITH THE LATEST EDITION OF THE TEXAS MANUAL ON UNIFORM TRAFFIC CONTROL DEVICES.
8. ALL DIMENSIONS ARE TO FACE OF CURB UNLESS OTHERWISE NOTED.
9. ALL STRIPING SHALL BE THERMOPLASTIC.
10. ANY FILL TO BE PLACED IN EXCESS OF 8 INCHES DEEP SHALL BE PLACED IN CONFORMANCE WITH THE REQUIREMENTS OF FHA/HUD DATA SHEET 79G. A LETTER OF CERTIFICATION FROM A QUALIFIED GEOTECHNICAL ENGINEER SHALL BE PRESENTED UPON COMPLETION OF FILLING ACTIVITIES.
11. PAVING CRITERIA:

A GEOTECHNICAL INVESTIGATION REPORT FOR THIS PROJECT WAS PERFORMED BY MLA GEOTECHNICAL IN APRIL 2022. ACCORDING TO THAT INVESTIGATION, THE STREET SECTIONS ARE TO BE CONSTRUCTED AS FOLLOWS:

MLA Geotechnical "put us to the test"
A Division of MLA Labs, Inc.

GEOTECHNICAL INVESTIGATION
PAVEMENT THICKNESS
RECOMMENDATIONS

Rancho Del Cielo - REVISED
Jarrell, Texas

Report For:
Sunwest Company
3939 Bee Caves Road, Building C100
Austin, Texas 78746

April 2022

Engineer's Job # 20101100.003

MLA Geotechnical TBPE #1094 # F-2694
Geotechnical Engineering and
Construction Materials Testing

Christopher P. Elliott
Vice President

Timothy R. Weston, P.E.
President
4/21/22

TIMOTHY R. WESTON 97938 LICENSED PROFESSIONAL ENGINEER

Nicholas J. Page P.E.
Geotechnical Engineer

STATE OF TEXAS NICHOLAS J. PAGE 122579 LICENSED PROFESSIONAL ENGINEER
4/21/22

2804 Longhorn Boulevard Austin, Texas 78758 512-873-8899
TBPGE F-2694 Dallas/Fort Worth Austin San Antonio Houston Bryan/College Station Killeen

Rancho Del Cielo - REVISED
Engineer's Job No.: 20101100.003

RECOMMENDATIONS - PAVEMENT THICKNESS SECTIONS

The recommendations below constitute a pavement design intended to address the subsurface and traffic conditions for each street classification. This information is intended to be incorporated into a set of civil engineering plans such that the pavement cross sections (including curb and gutter details) and street classifications specific to each street (which are unknown at this time) can be appropriately addressed.

Street Classification	Subgrade Material	Flex Base, Emulsified Concrete, in	Crushed Limestone Flex Base, in	Lime Stabilized Subgrade, in	Geogrid
Local Street	Subgrade PI > 20	2.0	9	8*	X*
~~Residential~~ Collector	Subgrade PI > 20	3.0	14	8*	X*
Neighborhood ~~Collector~~	Subgrade PI > 20	3.0	10	6*	X*

Notes:
1. * - A single layer of Tensar 130S or equivalent to be approved by the Geotechnical Engineer should be placed below the crushed limestone base layer. If the subgrade is composed of limestone, the geogrid and lime stabilized subgrade can be omitted.
2. Given the known variability of surface soils and the presence of faults at this site, the geotechnical engineer must verify the subgrade before installation of the pavement system can proceed. Multiple site visits may be required depending upon the construction schedule. Finalized distinction between pavement thickness section options shall be provided as addendums to this report as these observations are completed. Please contact the geotechnical engineer when the utility trenches are open.
3. The concern has arisen that ground water may enter the utility trenches at this site causing detrimental settlement of the utility trench backfill, especially near contact zones between differing geologies. To address this concern, the wastewater utility trenches could be turned in to French drains. To achieve this, additional poorly-graded gravel, such as the gravel already being used for pipe bedding at this site, should be placed above the pipe bedding material to the elevation where ground water is encountered. This extra layer of gravel should be covered with a geotextile fabric to prevent material above the gravel from infiltrating the gravel layer. Then, the utility trench should be filled in compacted layers in accordance with the construction plans. The wastewater utility trench must then be allowed to daylight from its lowest point such that water does not accumulate in the utility trench. Additional gravel may be required in the utility trench depending upon the depth that ground water is entering the utility trench during construction. A line item for French drains should be included in construction bid documents.

-S-

NO.	REVISION	DATE

STATE OF TEXAS JENNIFER C. FRANKLIN 118838 LICENSED PROFESSIONAL ENGINEER 4/25/24

PAPE-DAWSON ENGINEERS
AUSTIN | SAN ANTONIO | HOUSTON | FORT WORTH | DALLAS
10801 N MOPAC EXPY, BLDG 3, STE 200 | AUSTIN, TX 78759 | 512.454.8711
TBPE FIRM REGISTRATION #470 | TBPLS FIRM REGISTRATION #10028801

RANCHO DEL CIELO - PHASE 4B
WILLIAMSON COUNTY, TEXAS
CONSTRUCTION NOTES 1 OF 3

CITY JOB No.
JOB NO. 51118-61
DATE SEPTEMBER 2024
DESIGNER TS
CHECKED DRAWN CE/JM
SHEET 5 OF 36

Date: Sep 24, 2024, 3:55pm User ID: tstephens
File: H:\Projects\51118-61_Phase 4\130 Construction Documents\Civil\CN51118-61.dwg
THIS DOCUMENT HAS BEEN PRODUCED FROM MATERIAL THAT WAS STORED AND/OR TRANSMITTED ELECTRONICALLY AND MAY HAVE BEEN INADVERTENTLY ALTERED. RELY ONLY ON FINAL HARDCOPY MATERIALS BEARING THE CONSULTANT'S ORIGINAL SIGNATURE AND SEAL.

30 TAC SECTION 290.44(E)(4)
WATER LINE / WASTEWATER SEPARATION REQUIREMENTS

WHEN NEW POTABLE WATER DISTRIBUTION LINES ARE CONSTRUCTED, THEY SHALL BE INSTALLED NO CLOSER THAN NINE FEET IN ALL DIRECTIONS TO WASTEWATER COLLECTION FACILITIES. ALL SEPARATION DISTANCES SHALL BE MEASURED FROM THE OUTSIDE SURFACE OF EACH OF THE RESPECTIVE PIECES.

(4) WHERE THE NINE-FOOT SEPARATION DISTANCE CANNOT BE ACHIEVED, THE FOLLOWING CRITERIA SHALL APPLY.

(A) NEW WATERLINE INSTALLATION – PARALLEL LINES.

I. WHERE A NEW POTABLE WATERLINE PARALLELS AN EXISTING, NON-PRESSURE OR PRESSURE RATED WASTEWATER MAIN OR LATERAL AND THE LICENSED PROFESSIONAL ENGINEER LICENSED IN THE STATE OF TEXAS IS ABLE TO DETERMINE THAT THE EXISTING WASTEWATER MAIN OR LATERAL IS NOT LEAKING, THE NEW POTABLE WATERLINE SHALL BE LOCATED AT LEAST TWO FEET ABOVE THE EXISTING WASTEWATER MAIN OR LATERAL, MEASURED VERTICALLY, AND AT LEAST FOUR FEET AWAY, MEASURED HORIZONTALLY, FROM THE EXISTING WASTEWATER MAIN OR LATERAL. EVERY EFFORT SHALL BE EXERTED NOT TO DISTURB THE BEDDING AND BACKFILL OF THE EXISTING WASTEWATER MAIN OR LATERAL.

II. WHERE A NEW POTABLE WATERLINE PARALLELS AN EXISTING PRESSURE RATED WASTEWATER MAIN OR LATERAL AND IT CANNOT BE DETERMINED BY THE LICENSED PROFESSIONAL ENGINEER IF THE EXISTING LINE IS LEAKING, THE EXISTING WASTEWATER MAIN OR LATERAL SHALL BE REPLACED WITH AT LEAST 150 PSI PRESSURE RATED PIPE. THE NEW POTABLE WATERLINE SHALL BE LOCATED AT LEAST TWO FEET ABOVE THE NEW WASTEWATER LINE, MEASURED VERTICALLY, AND AT LEAST FOUR FEET AWAY, MEASURED HORIZONTALLY, FROM THE REPLACED WASTEWATER MAIN OR LATERAL.

III. WHERE A NEW POTABLE WATERLINE PARALLELS A NEW WASTEWATER MAIN, THE WASTEWATER MAIN OR LATERAL SHALL BE CONSTRUCTED OF AT LEAST 150 PSI PRESSURE RATED PIPE. THE NEW POTABLE WATERLINE SHALL BE LOCATED AT LEAST TWO FEET ABOVE THE WASTEWATER MAIN OR LATERAL, MEASURED VERTICALLY, AND AT LEAST FOUR FEET AWAY, MEASURED HORIZONTALLY, FROM THE WASTEWATER MAIN OR LATERAL.

(B) NEW WATERLINE INSTALLATION – CROSSING LINES.

I. WHERE A NEW POTABLE WATERLINE CROSSES AN EXISTING, NON-PRESSURE RATED WASTEWATER MAIN OR LATERAL, ONE SEGMENT OF THE WATERLINE PIPE SHALL BE CENTERED OVER THE WASTEWATER MAIN OR LATERAL SUCH THAT THE JOINTS OF THE WATERLINE PIPE ARE EQUIDISTANT AND AT LEAST NINE FEET HORIZONTALLY FROM THE CENTERLINE OF THE WASTEWATER MAIN OR LATERAL. THE POTABLE WATERLINE SHALL BE AT LEAST TWO FEET ABOVE THE WASTEWATER MAIN OR LATERAL. WHENEVER POSSIBLE, THE CROSSING SHALL BE CENTERED BETWEEN THE JOINTS OF THE WASTEWATER MAIN OR LATERAL. IF THE EXISTING WASTEWATER MAIN OR LATERAL IS DISTURBED OR SHOWS SIGNS OF LEAKING, IT SHALL BE REPLACED FOR AT LEAST NINE FEET IN BOTH DIRECTIONS (18 FEET TOTAL) WITH AT LEAST 150 PSI PRESSURE RATED PIPE.

II. WHERE A NEW POTABLE WATERLINE CROSSES AN EXISTING, PRESSURE RATED WASTEWATER MAIN OR LATERAL, ONE SEGMENT OF THE WATERLINE PIPE SHALL BE CENTERED OVER THE WASTEWATER MAIN OR LATERAL SUCH THAT THE JOINTS OF THE WATERLINE PIPE ARE EQUIDISTANT AND AT LEAST NINE FEET HORIZONTALLY FROM THE CENTERLINE OF THE WASTEWATER MAIN OR LATERAL. THE POTABLE WATERLINE SHALL BE AT LEAST SIX INCHES ABOVE THE WASTEWATER MAIN OR LATERAL. WHENEVER POSSIBLE, THE CROSSING SHALL BE CENTERED BETWEEN THE JOINTS OF THE WASTEWATER MAIN OR LATERAL. IF THE EXISTING WASTEWATER MAIN OR LATERAL SHOWS SIGNS OF LEAKING. IT SHALL BE REPLACED FOR AT LEAST NINE FEET IN BOTH DIRECTIONS (18 FEET TOTAL) WITH AT LEAST 150 PSI PRESSURE RATED PIPE.

III. WHERE A NEW POTABLE WATERLINE CROSSES A NEW, NON-PRESSURE RATED WASTEWATER MAIN OR LATERAL AND THE STANDARD PIPE SEGMENT LENGTH OF THE WASTEWATER MAIN OR LATERAL IS AT LEAST 18 FEET, ONE SEGMENT OF THE WATERLINE PIPE SHALL BE CENTERED OVER THE WASTEWATER MAIN OR LATERAL SUCH THAT THE JOINTS OF THE WATERLINE PIPE ARE EQUIDISTANT AND AT LEAST NINE FEET HORIZONTALLY FROM THE CENTERLINE OF THE WASTEWATER MAIN OR LATERAL. WHENEVER POSSIBLE, THE CROSSING SHALL BE CENTERED BETWEEN THE JOINTS OF THE WASTEWATER MAIN OR LATERAL. THE WASTEWATER PIPE SHALL HAVE A MINIMUM PIPE STIFFNESS OF 115 PSI AT 5.0% DEFLECTION. THE WASTEWATER MAIN OR LATERAL SHALL BE EMBEDDED IN CEMENT STABILIZED SAND (SEE CLAUSE (VI) OF THIS SUBPARAGRAPH) FOR THE TOTAL LENGTH OF ONE PIPE SEGMENT PLUS 12 INCHES BEYOND THE JOINT ON EACH END.

IV. WHERE A NEW POTABLE WATERLINE CROSSES A NEW, NON-PRESSURE RATED WASTEWATER MAIN OR LATERAL AND A STANDARD LENGTH OF THE WASTEWATER PIPE IS LESS THAN 18 FEET IN LENGTH, THE POTABLE WATER PIPE SEGMENT SHALL BE CENTERED OVER THE WASTEWATER LINE. THE MATERIALS AND METHOD OF INSTALLATION SHALL CONFORM WITH ONE OF THE FOLLOWING OPTIONS:

i. WITHIN NINE FEET HORIZONTALLY OF EITHER SIDE OF THE WATERLINE, THE WASTEWATER PIPE AND JOINTS SHALL BE CONSTRUCTED WITH PIPE MATERIAL HAVING A MINIMUM PRESSURE RATING OF AT LEAST 150 PSI.AN ABSOLUTE MINIMUM VERTICAL SEPARATION DISTANCE OF TWO FEET SHALL BE PROVIDED. THE WASTEWATER MAIN OR LATERAL SHALL BE LOCATED BELOW THE WATERLINE.

ii. ALL SECTIONS OF WASTEWATER MAIN OR LATERAL WITHIN NINE FEET HORIZONTALLY OF THE WATERLINE SHALL BE ENCASED IN AN 18-FOOT (OR LONGER) SECTION OF PIPE. FLEXIBLE ENCASING PIPE SHALL HAVE A MINIMUM PIPE STIFFNESS OF 115 PSI AT 5.0% DEFLECTION. THE ENCASING PIPE SHALL BE CENTERED ON THE WATERLINE AND SHALL BE AT LEAST TWO NOMINAL PIPE DIAMETERS LARGER THAN THE WASTEWATER MAIN OR LATERAL. THE SPACE AROUND THE CARRIER PIPE SHALL BE SUPPORTED AT FIVE-FOOT (OR LESS) INTERVALS WITH SPACERS OR BE FILLED TO THE SPRINGLINE WITH WASHED SAND. EACH END OF THE CASING SHALL BE SEALED WITH WATERTIGHT NON-SHRINK CEMENT GROUT OR A MANUFACTURED WATERTIGHT SEAL. AN ABSOLUTE MINIMUM SEPARATION DISTANCE OF SIX INCHES BETWEEN THE ENCASEMENT PIPE AND THE WATERLINE SHALL BE PROVIDED. THE WASTEWATER LINE SHALL BE LOCATED BELOW THE WATERLINE.

iii. WHEN A NEW WATERLINE CROSSES UNDER A WASTEWATER MAIN OR LATERAL, THE WATERLINE SHALL BE ENCASED AS DESCRIBED FOR WASTEWATER MAINS OR LATERALS IN SUBCLAUSE (II) OF THIS CLAUSE OR CONSTRUCTED OF DUCTILE IRON OR STEEL PIPE WITH MECHANICAL OR WELDED JOINTS AS APPROPRIATE. AN ABSOLUTE MINIMUM SEPARATION DISTANCE OF ONE FOOT BETWEEN THE WATERLINE AND THE WASTEWATER MAIN OR LATERAL SHALL BE PROVIDED. BOTH THE WATERLINE AND WASTEWATER MAIN OR LATERAL MUST PASS A PRESSURE AND LEAKAGE TEST AS SPECIFIED IN AWWA C600 STANDARDS.

V. WHERE A NEW POTABLE WATERLINE CROSSES A NEW, PRESSURE RATED WASTEWATER MAIN OR LATERAL, ONE SEGMENT OF THE WATERLINE PIPE SHALL BE CENTERED OVER THE WASTEWATER LINE SUCH THAT THE JOINTS OF THE WATERLINE PIPE ARE EQUIDISTANT AND AT LEAST NINE FEET HORIZONTALLY FROM THE CENTERLINE OF THE WASTEWATER MAIN OR LATERAL. THE POTABLE WATERLINE SHALL BE AT LEAST SIX INCHES ABOVE THE WASTEWATER MAIN OR LATERAL. WHENEVER POSSIBLE, THE CROSSING SHALL BE CENTERED BETWEEN THE JOINTS OF THE WASTEWATER MAIN OR LATERAL. THE WASTEWATER PIPE SHALL HAVE A MINIMUM PRESSURE RATING OF AT LEAST 150 PSI. THE WASTEWATER MAIN OR LATERAL SHALL BE EMBEDDED IN CEMENT STABILIZED SAND (SEE CLAUSE (VI) OF THIS SUBPARAGRAPH) FOR THE TOTAL LENGTH OF ONE PIPE SEGMENT PLUS 12 INCHES BEYOND THE JOINT ON EACH END.

VI. WHERE CEMENT STABILIZED SAND BEDDING IS REQUIRED, THE CEMENT STABILIZED SAND SHALL HAVE A MINIMUM OF 10% CEMENT PER CUBIC YARD OF CEMENT STABILIZED SAND MIXTURE, BASED ON LOOSE DRY WEIGHT VOLUME (AT LEAST 2.5 BAGS OF CEMENT PER CUBIC YARD OF MIXTURE). THE CEMENT STABILIZED SAND BEDDING SHALL BE A MINIMUM OF SIX INCHES ABOVE AND FOUR INCHES BELOW THE WASTEWATER MAIN OR LATERAL. THE USE OF BROWN COLORING IN CEMENT STABILIZED SAND FOR WASTEWATER MAIN OR LATERAL BEDDING IS RECOMMENDED FOR THE IDENTIFICATION OF PRESSURE RATED WASTEWATER MAINS DURING FUTURE CONSTRUCTION.

RANCHO DEL CIELO MUNICIPAL UTILITY DISTRICT

DISTRICT GENERAL NOTES:

1. THE DISTRICT ENGINEER, JONES-HEROY & ASSOCIATES, INC. (JASON JONES, PHONE: 512-556-2300), AND THE CITY OF JARRELL (512-746-4593) SHALL BE CONTACTED AT LEAST 2 WORKING DAYS (48-HOURS) PRIOR TO:
   I. CONDUCTING A PRE-CONSTRUCTION CONFERENCE;
   II. BEGINNING OF EACH PHASE OF CONSTRUCTION;
   III. TESTING OF WATER AND WASTEWATER LINES OR CRITICAL EQUIPMENT; AND,
   IV. FINAL WALK-THROUGH OF FACILITIES.
2. THE DISTRICT OPERATOR AND THE CITY OF JARRELL SHALL BE CONTACTED AT LEAST 3 WORKING DAYS (72-HOURS) PRIOR TO:
   I. ALL CONNECTIONS OR MODIFICATIONS TO THE EXISTING WATER OR WASTEWATER SYSTEM; AND,
   II. TESTING OF WATER AND WASTEWATER LINES OR CRITICAL EQUIPMENT.
3. THE CONTRACTOR SHALL VERIFY THE EXACT LOCATION AND DEPTHS OF UNDERGROUND UTILITIES AT LEAST 48-HOURS PRIOR TO CONSTRUCTION WHETHER SHOWN ON THE PLANS OR NOT, AND TO PROTECT THE SAME DURING CONSTRUCTION. THE FOLLOWING LOCAL UTILITY CONTACT INFORMATION IS PROVIDED FOR REFERENCE ONLY AND MAY BE UPDATED FROM TIME TO TIME:
   I. RANCHO DEL CIELO MUNICIPAL UTILITY DISTRICT: (512) 246-1400
   II. CITY OF JARRELL: (512) 746-4593
   III. TEXAS STATE-WIDE ON CALL LOCATOR: DIAL '811'
4. THE CONTRACTOR SHALL ALLOW ENTRY BY THE DISTRICT'S REPRESENTATIVE ON THE LAND OR PREMISES FOR THE PURPOSE OF INSPECTION OF CONDITIONS ON THE PREMISES DURING ALL PHASES OF CONSTRUCTION.
5. THE CONTRACTOR SHALL DIRECTLY NOTIFY THE DISTRICT'S INSPECTION REPRESENTATIVE AT LEAST 48-HOURS PRIOR TO ANY BUSINESS DAY NO WORK WILL BE PERFORMED. LACK OF NOTICE MAY RESULT IN THE CONTRACTOR BEING CHARGED THE INSPECTOR'S APPLICABLE FEES FOR DAYS NOT WORKED.
6. NO CONSTRUCTION OF ANY WATER, WASTEWATER, OR DRAINAGE FACILITIES SHALL BE ALLOWED DURING NON-BUSINESS HOURS TO INCLUDE WEEKENDS AND HOLIDAYS, UNLESS PRIOR APPROVAL IS RECEIVED BY THE DISTRICT IN WRITING.
7. CONTRACTOR SHALL DESIGNATE AN ENGLISH SPEAKING REPRESENTATIVE AT THE PROJECT SITE FOR ALL DISTRICT INSPECTIONS AND CORRESPONDENCE.
8. NO VALVES WILL BE OPENED WHICH CONNECT NEW WATER MAINS TO THE EXISTING DISTRICT SYSTEM WITHOUT PRIOR DISTRICT APPROVAL AND A DISTRICT REPRESENTATIVE PRESENT. CONTRACTOR SHALL MAINTAIN A LOG OF ALL FLUSHING LOCATIONS, DATES, TIMES, AND DURATIONS THAT MAY REQUIRE POTABLE WATER NOT OTHERWISE BEING MEASURED BY THE CONTRACTOR'S CONSTRUCTION METER. THE CONTRACTOR'S FLUSHING LOGS SHALL BE SUBMITTED AND APPROVED BY THE DISTRICT OPERATOR PRIOR TO FINAL ACCEPTANCE AND PAYMENT ON THE PROJECT.

   AS AN ALTERNATIVE, ALL INITIAL FILLING, FLUSHING, AND HYDROSTATIC TESTING OF NEW WATER MAINS MAY BE FROM THE CONTRACTOR'S CONSTRUCTION METER AND BACKFLOW PREVENTION VALVE VIA ONE OR MORE TEMPORARY JUMPER(S) INSTALLED TO BYPASS THE EXISTING DISTRICT VALVE(S). FOLLOWING A PASSING HYDROSTATIC TEST AND INITIAL FLUSHING OF THE MAIN TO ACHIEVE CHLORINE RESIDUALS ACCEPTABLE FOR PUBLIC DRINKING WATER SYSTEMS, FINAL SCOUR FLUSHING WILL BE ALLOWED THROUGH THE EXISTING DISTRICT VALVE(S) WITH A DISTRICT REPRESENTATIVE PRESENT.

   IN ALL INSTANCES, PASSING BACTERIOLOGICAL TEST(S) MUST BE PROVIDED TO THE DISTRICT BEFORE LEAVING THE EXISTING DISTRICT VALVE(S) OPEN WITHOUT A DISTRICT REPRESENTATIVE PRESENT.
9. CONTRACTOR SHALL PROPERLY DISPOSE OF ALL HIGHLY CHLORINATED FLUSH WATER (>10 MG/LITER CHLORINE RESIDUAL) WITH A DISTRICT REPRESENTATIVE PRESENT. HIGHLY CHLORINATED WATER MAY NOT BE DISPOSED OF DIRECTLY INTO THE DISTRICT'S STORM DRAIN SYSTEM, DRAINAGE CHANNELS, CREEKS, OR WASTEWATER COLLECTION SYSTEM AT A RATE WHICH MAY CAUSE DAMAGE TO THE WASTEWATER TREATMENT PROCESS OR THE ENVIRONMENT.
10. WITH THE EXCEPTION OF LOT PADS WHERE ADDITIONAL CONSTRUCTION IS PLANNED, ALL AREAS DISTURBED BY CONSTRUCTION SHALL BE SEEDED AND RE-VEGETATED AFTER CONSTRUCTION IS COMPLETE. ADDITIONALLY, ALL 4:1 OR STEEPER EARTHEN SLOPES AND CHANNEL FLOW LINES SHALL INCLUDE 4-INCHES TOPSOIL AND TEMPORARY EROSION CONTROL MATTING. ALTERNATIVE STABILIZATION METHODS WILL BE CONSIDERED ON A CASE BY CASE BASIS. CONTRACTOR SHALL BE RESPONSIBLE FOR ESTABLISHING VEGETATION BY PERIODIC WATERING OR OTHER ACCEPTABLE MEANS.
11. CONTRACTOR IS RESPONSIBLE FOR COMPLIANCE WITH TEXAS POLLUTANT DISCHARGE ELIMINATION SYSTEM (TPDES) CONSTRUCTION GENERAL PERMIT (CGP) NO. TXR150000, AS APPLICABLE.
12. CONTRACTOR IS RESPONSIBLE FOR RESTORING ANY DAMAGES TO EXISTING STRUCTURES, UTILITIES, FENCES, PAVEMENT, CURBS, LANDSCAPING, OR DRIVEWAYS TO ITS ORIGINAL, OR BETTER, CONDITION.
13. ALL GARBAGE AND SPOIL MATERIAL FROM THIS WORK SHALL BE REMOVED FROM THE SITE BY THE CONTRACTOR.
14. THE INTERIOR OF ALL PIPE, FITTINGS, AND OTHER ACCESSORIES SHALL BE KEPT FREE FROM DIRT AND FOREIGN MATTER AT ALL TIMES (INCLUDING DURING TRANSPORT AND DELIVERY) AND STORED IN A MANINER THAT WILL PROTECT THEM FROM DAMAGE. CONTRACTOR TO ENSURE THAT PIPELINE ENDS ARE COVERED CLOSEST TO TRUCK EXHAUST DURING TRANSPORT. STOCKPILED MATERIALS SHALL BE STACKED SO AS TO MINIMIZE ENTRANCE OF FOREIGN MATTER.
15. CONTRACTOR SHALL COMPLY WITH THE REQUIREMENTS OF TCEQ RULE 30 TAC 290.44 RELATING TO SEPARATION OF WATER AND WASTEWATER LINES.
16. ALL MANHOLE FRAMES, COVERS, VALVES, AND CLEANOUTS SHALL BE RAISED TO FINISHED GRADE PRIOR TO FINAL PAVING CONSTRUCTION.
17. ALL WET UTILITY INSTALLATION TO BE COMPLETE IN PLACE PRIOR TO THE INSTALLATION OF DRY UTILITIES.
18. ALL WATER SERVICE, WASTEWATER SERVICE, AND VALVE LOCATIONS SHALL BE APPROPRIATELY MARKED AS FOLLOWS:
    WATER SERVICE "W" ON FACE OF CURB
    WASTEWATER SERVICE "S" ON FACE OF CURB
    VALVE "V" ON FACE OF CURB

NON-DISTRICT NOTE REQUIREMENTS:

1. WILLIAMSON COUNTY GENERAL CONSTRUCTION NOTES (AS DIRECTED BY COUNTY)
2. TCEQ WATER/WASTEWATER SEPARATION REQUIREMENTS (FROM 30 TAC CHAPTER 290.44(E)(4))

MATERIAL SPECIFICATIONS:

1. ALL MATERIALS SHALL BE NEW, AND COMPLY WITH THE LATEST AND APPLICABLE STANDARDS FOR PUBLIC UTILITY SYSTEMS INCLUDING, BUT NOT LIMITED TO, THE ASSOCIATION OF AMERICAN WATER WORKS (AWWA), AMERICAN NATIONAL STANDARDS INSTITUTE (ANSI), AMERICAN STANDARD OF TESTING AND MATERIALS (ASTM) AND INSTALLED AND TESTED ACCORDING THE MANUFACTURER'S RECOMMENDATIONS AND LOCAL PLUMBING CODES.
2. ALL WATER MAINS LESS THAN OR EQUAL TO 12-INCH DIAMETER SHALL BE PVC WITH A MINIMUM PRESSURE RATING OF 150 POUNDS PER SQUARE INCH (PSI), MINIMUM DR-18 WALL THICKNESS RATIO, COMPLY WITH AWWA C900, AND NOT LESS THAN 6-INCHES DIAMETER.
3. ALL WATER SYSTEM VALVES, FITTINGS, AND SERVICE CONNECTIONS SHALL BE A MINIMUM 150 PSI WORKING PRESSURE RATING. ALL IRON PIPE AND FITTINGS SHALL BE WRAPPED WITH MINIMUM 8-MIL POLYETHYLENE AND SEALED WITH DUCT TAPE PER AWWA C105 GUIDELINES.
4. WATER MAIN FITTINGS SHALL BE DUCTILE IRON WITH MECHANICAL JOINTS AND COMPLY WITH AWWA C153 (FITTINGS) AND AWWA C111 (GASKETS).
5. FIRE HYDRANTS SHALL COMPLY WITH AWWA C502 FOR DRY-BARREL FIRE HYDRANTS, AND ALL WATER MAIN VALVES SHALL BE RESILIENT SEATED GATE VALVES COMPLYING WITH AWWA C509 OR AWWA C515 (DUCTILE IRON).
6. AIR VALVES ON WATER MAINS SHALL COMPLY WITH AWWA C512. AIR VALVES ON SEWER FORCE MAINS SHALL BE RATED BY THE MANUFACTURER FOR PERFORMANCE IN WASTEWATER APPLICATIONS.
7. THE METER/CURB STOPS INSTALLED IN THE WATER SYSTEM SERVICE CONNECTIONS SHALL BE LIMITED TO FORD, MCDONALD, OR AN APPROVED EQUAL MANUFACTURER. ALL WATER SERVICE CONNECTION VALVES AND FITTINGS SHALL COMPLY WITH AWWA C800.
8. GRAVITY FLOW WASTEWATER COLLECTION MAINS LESS THAN 18-INCH DIAMETER SHALL BE GREEN PVC WITH A MINIMUM SDR-26 RATING FOR WALL THICKNESS, COMPLY WITH ASTM D3034, AND NOT LESS THAN 6-INCHES DIAMETER. SERVICE CONNECTIONS SHALL BE SDR-26 PIPE WITH SDR-35 FITTINGS.
9. FORCE MAIN PIPELINES (4 TO 12 INCH DIAMETER) SHALL BE PVC WITH A MINIMUM 150 PSI WORKING PRESSURE AND DESIGNED TO WITHSTAND THE POTENTIAL SURGE GENERATED BY A SUDDEN PUMP FAILURE UNDER MAXIMUM FLOW CONDITIONS. NO WATER DESIGNATED OR BLUE PIPE SHALL BE ALLOWED IN FORCE MAIN APPLICATIONS.
10. A 6-INCH END OF MAIN WASTEWATER CLEAN-OUT IS ACCEPTABLE IN LIEU OF A MANHOLE WHEN NO EXTENSIONS ARE ANTICIPATED AND SHALL BE CONSTRUCTED PER THE DISTRICT'S STANDARD DETAIL.
11. ALL WATER MAINS SHALL HAVE 36-INCHES MINIMUM COVER IN UNPAVED AREAS AND 30-INCHES MINIMUM COVER BELOW SUBGRADE IN PAVED AREAS. ALL WASTEWATER MAINS SHALL HAVE 48-INCHES MINIMUM COVER.
12. TRACER DETECTION TAPE SHALL BE PLACED DIRECTLY ABOVE ALL WATER AND WASTEWATER MAINS AT A DEPTH OF 18-INCHES BELOW FINISHED GRADE. THE TAPE SHALL BE MINIMUM 12-INCHES WIDE AND INCASED IN A PROTECTIVE, INERT, PLASTIC JACKET AND COLOR-CODED IN ACCORDANCE WITH APWA UNIFORM COLOR CODE.
13. GAS RESISTANT PROTECTIVE COATINGS WILL BE REQUIRED ON DOMESTIC WASTEWATER MANHOLES WHERE A CONNECTION IS MADE WITH A PRESSURIZED FORCE MAIN.
14. MANHOLE COVERS SHALL BE BOLTED AND GASKETED WHEN LOCATED WITHIN A FLOOD HAZARD AREA OR DRAINAGE WAY.
15. ALL STORM DRAIN PIPES SHALL BE REINFORCED CONCRETE (RCP CLASS III); OR DUAL WALL ADS N-12 HDPE WITH A CORRUGATED EXTERIOR AND SMOOTH INTERIOR MEETING THE REQUIREMENTS OF ASTM F2648 AND AASHTO M294 FOR USE IN GRAVITY FLOW DRAINAGE APPLICATIONS. ALL WYES, BENDS, PIPE SIZE CHANGES AND TRANSITIONS SHALL BE PREFABRICATED AND SHALL CONFORM TO ASTM F2306 AND AASHTO M294.
16. MINIMUM TRENCH WIDTHS FOR HDPE DRAINAGE PIPE SHALL CONFORM TO THE REQUIREMENTS OF TABLE 1 BELOW.
17. THE DISTRICT MUST APPROVE ALL MATERIAL USED FOR PIPE EMBEDMENT AND TRENCH BACKFILL. ACCEPTABLE PIPE BEDDING MATERIAL SHALL INCLUDE PIPE BEDDING STONE, PEA GRAVEL AND IN LIEU OF SAND, AN NATURALLY OCCURRING OR MANUFACTURED STONE MATERIAL CONFORMING TO ASTM C33 FOR STONE QUALITY AND MEETING THE FOLLOWING GRADATION SPECIFICATION:

SIEVE SIZE	PERCENT RETAINED BY WEIGHT
1/2"	0
3/8"	0-2
#4	40-85
#10	95-100

ALTERNATE GRADATION TABLES WILL BE CONSIDERED BY THE DISTRICT ON A CASE BY CASE BASIS; HOWEVER, MANUFACTURED SAND OR ITS EQUIVALENT IS NOT ALLOWED IN TRENCHES WITH GROUNDWATER OR BENEATH STRUCTURES (MANHOLES, INLET BOXES).

INSPECTIONS AND TESTING:

1. THE DISTRICT AND THE CITY OF JARRELL SHALL INSPECT AND APPROVE OF THE WORKMANSHIP AND MATERIALS UTILIZED OR INVOLVED IN THE CONSTRUCTION OF THE WATER, WASTEWATER, AND DRAINAGE FACILITIES, WHICH MAY INCLUDE THE FOLLOWING:
   A. ALL MATERIALS USED IN THE WORK;
   B. THE COMPLETED TRENCH FOR EACH SECTION OF WORK;
   C. PIPE AND TUBING AFTER UNDER-BEDDING INSTALLATION, OVER BEDDING, AND LAYING OF DETECTABLE TRACER TAPE AS REQUIRED;
   D. FITTINGS, FIXTURES, AND APPURTENANCES AFTER INSTALLATION AND THRUST BLOCKING, IF REQUIRED, BUT BEFORE BEDDING OR BACKFILL IS PLACED;
   E. ALL REQUIRED PRESSURE, VACUUM, AND MATERIALS TESTING; AND,
   F. A FINAL INSPECTION.
2. ALL UTILITY INSPECTIONS WILL BE PERFORMED BY THE CITY OF JARRELL. THE DISTRICT'S MAINTENANCE RESPONSIBILITIES ARE LIMITED TO THE STORM SEWER SYSTEM AND THE WATER QUALITY AND DETENTION FACILITIES.
3. ANY CONFLICTS BETWEEN THE CITY OF JARRELL NOTES AND SPECIFICATIONS AND THOSE OF THE DISTRICT SHALL DEFAULT TO THE CITY OF JARRELL STANDARDS.
4. ALL MATERIALS AND WATER QUALITY TESTING WILL BE THE RESPONSIBILITY OF THE CONTRACTOR, AND SHALL BE COORDINATED WITH THE DISTRICT'S REPRESENTATIVE. PASSING REPORTS OF ALL REQUIRED TESTS SHALL BE PROVIDED TO THE DISTRICT PRIOR TO ACCEPTANCE OF THE FACILITIES FOR OPERATION AND MAINTENANCE.

   AT A MINIMUM, THE FOLLOWING TESTS ARE REQUIRED AND SHALL BE CONDUCTED PER TCEQ CHAPTER 217.57 FOR GRAVITY FLOW WASTEWATER COLLECTION SYSTEMS, TCEQ CHAPTER 217.68 FOR WASTEWATER FORCE MAINS, AND APPLICABLE AWWA STANDARDS FOR WATER SYSTEMS:
   - HYDROSTATIC PRESSURE TESTING OF WATER MAINS IN ACCORDANCE WITH AWWA C605 (150 PSI FOR 2-HOURS) FOLLOWING THE INSTALLATION OF ALL ABOVE GROUND APPURTENANCES (METER BOXES, SERVICES, FIRE HYDRANTS, AND FLUSH VALVES) AT FINAL GRADE. THE ALLOWABLE LEAKAGE RATE SHALL NOT EXCEED THE SPECIFIED VALUES IN TABLE 2 BELOW, AND IS DERIVED FROM THE FORMULAS IN AWWA C605. IF THE PIPELINE UNDER TEST CONTAINS SECTIONS OF VARIOUS DIAMETERS AND MULTIPLE CLOSED VALVES, THE TESTING ALLOWANCE WILL BE THE SUM OF THE TESTING ALLOWANCE FOR EACH PIPELINE SIZE AND VALVE.
   - CLEAN, DISINFECT, AND FLUSH THE WATER MAIN AND APPURTENANCES IN ACCORDANCE WITH AWWA C651. PASSING BACTERIOLOGICAL TEST SAMPLES MUST BE DRAWN FROM THE FURTHEST POINT IN THE NEW WATER MAIN FROM THE EXISTING SYSTEM AS WELL AS AT EACH ADDITIONAL 1,000 FOOT INTERVAL ALONG THE PIPELINE ROUTE. THE LABORATORY USED FOR BACTERIOLOGICAL ANALYSIS AND TESTING MUST BE APPROVED BY THE DISTRICT.
   - HYDROSTATIC PRESSURE TESTING OF WASTEWATER FORCE MAINS AT 50 PSI ABOVE THE NORMAL OPERATING PRESSURE FOR A MINIMUM OF 4.0 HOURS. THE LEAKAGE RATE MUST NOT EXCEED 10.0 GALLONS PER INCH DIAMETER PER MILE OF PIPE PER DAY.
   - LOW PRESSURE AIR TEST FOR ALL GRAVITY SEWER MAINS, INDEPENDENTLY OF THE CONNECTING MANHOLES. THE PIPELINE SHOULD FIRST BE FLUSHED AND CLEANED, THEN PRESSURIZED TO 3.5 PSI, STABILIZED, AND THE AIR PUMP TURNED OFF. THE TESTING EQUIPMENT MUST INCLUDE A PRESSURE RELIEF VALVE DESIGNED TO RELIEVE PRESSURE FROM THE PIPELINE AT 10 PSI OR LESS TO AVOID EXCESSIVE PRESSURE. THE MINIMUM TIME REQUIRED FOR A PRESSURE DROP IN THE PIPELINE FROM 3.5 PSI TO 2.5 PSI IS SUMMARIZED IN TABLE 3 BELOW AND DERIVED FROM THE FORMULAS IN TCEQ CHAPTER 217.57 (A)(1).
   - AS AN ALTERNATIVE TO THE LOW PRESSURE AIR TEST, THE DISTRICT ENGINEER OR DESIGNATED REPRESENTATIVE MAY REQUIRE OR ALLOW INFILTRATION OR EXFILTRATION TESTING OF THE GRAVITY SEWER MAINS.
   - DEFLECTION (MANDREL) PULLS TO CHECK FOR EXCESSIVE DEFLECTION IN GRAVITY SEWER MAINS. THE MANDREL SHALL BE PULLED BY HAND AND CONDUCTED AFTER THE FINAL BACKFILL HAS BEEN COMPACTED AND IN PLACE FOR NO LESS THAN 30 DAYS. THE RIGID MANDREL SHALL HAVE AN OUTSIDE DIAMETER EQUAL TO 95% OF THE INSIDE DIAMETER OF THE PIPE.
   - VACUUM TESTING (10-INCHES OF MERCURY FOR 2.0 MINUTES AFTER VACUUM PUMP IS OFF) OF ALL MANHOLES PRIOR TO APPLICATION OF A COATING OR GROUT ON THE HORIZONTAL JOINTS, AND INDEPENDENTLY OF THE CONNECTING PIPELINES. THE VACUUM MUST BE AT LEAST 9.0 INCHES OF MERCURY FOLLOWING THE TEST.
   - COMPACTION TESTS SHALL BE PERFORMED ON ALL PIPELINE TRENCHES AT A MINIMUM OF 500-FOOT INTERVALS AND AT EACH 6-INCH LIFT, OR AS DIRECTED BY THE DISTRICT OR WILLIAMSON COUNTY REPRESENTATIVE. THE CONTRACTOR WILL BE REQUIRED TO MAKE SUITABLE EXCAVATION TO ALLOW ACCESS FOR SUCH TESTING, AND WILL BE REQUIRED TO REMOVE AND REPLACE THE BACKFILL AS MANY TIMES AS NECESSARY TO ACHIEVE MINIMUM 95% DENSITY.
   - COMPRESSIVE STRENGTH AND SLUMP TESTS FOR ALL STRUCTURAL CONCRETE TO MEET DESIGN ENGINEER'S SPECIFICATIONS, AS APPLICABLE.
   - COATING TESTS FOR ALL CONCRETE MANHOLE AND LIFT STATION LININGS TO DEMONSTRATE SPECIFIED THICKNESS, AS APPLICABLE.

Table 1: Min. Trench Widths for HDPE Drainage Pipe

Pipe Diameter (in)	Minimum Trench Width (in)
18	42
24	48
30	56
36	64
42	72

Table 2: Allowable Leakage (gals) for 2-Hrs at 150 PSI

Length (ft)	Diameter (in)				
	6	8	12	16	18
5	0.00	0.01	0.01	0.01	0.01
10	0.01	0.01	0.02	0.03	0.03
15	0.01	0.02	0.03	0.04	0.04
20	0.02	0.03	0.04	0.05	0.06
25	0.02	0.03	0.05	0.07	0.07
50	0.05	0.07	0.10	0.13	0.15
75	0.07	0.10	0.15	0.20	0.22
100	0.10	0.13	0.20	0.26	0.30
200	0.20	0.26	0.40	0.53	0.60
300	0.30	0.40	0.60	0.79	0.89
400	0.40	0.53	0.79	1.06	1.19
500	0.50	0.66	0.99	1.32	1.49
600	0.60	0.79	1.19	1.59	1.79
700	0.70	0.93	1.39	1.85	2.09
800	0.79	1.06	1.59	2.12	2.38
900	0.89	1.19	1.79	2.38	2.68
1000	0.99	1.32	1.99	2.65	2.98
Valve	0.09	0.12	0.19	0.25	0.28

Table 3: Min. Testing Times for Low-Pressure Air Test

Pipe Diameter (in)	Minimum Time (seconds)	Maximum Length for Minimum Time (ft)	Time for Longer Length (seconds/ft)
6	340	398	0.855
8	454	298	1.520
10	567	239	2.374
12	680	199	3.419
15	850	159	5.342
18	1020	133	7.693

NO.	REVISION	DATE

STATE OF TEXAS
JENNIFER C. FRANKLIN
118838
LICENSED PROFESSIONAL ENGINEER
9-25-24

PAPE-DAWSON

Texas Commission on Environmental Quality
Organized Sewage Collection System
General Construction Notes

Edwards Aquifer Protection Program Construction Notes – Legal Disclaimer

The following/listed "construction notes" are intended to be advisory in nature only and do not constitute an approval or conditional approval by the Executive Director, nor do they constitute a comprehensive listing of rules or conditions to be followed during construction. Further actions may be required to achieve compliance with TCEQ regulations found in Title 30, Texas Administrative Code, Chapters 213 and 217, as well as local ordinances and regulations providing for the protection of water quality. Additionally, nothing contained in the following/listed "construction notes" restricts the powers of the Executive Director, the commission or any other governmental entity to prevent, correct, or curtail activities that result or may result in pollution of the Edwards Aquifer or hydrologically connected surface waters. The holder of any Edwards Aquifer Protection Plan containing "construction notes" is still responsible for compliance with Title 30, Texas Administrative Code, Chapters 213 or any other applicable TCEQ regulation, as well as all conditions of an Edwards Aquifer Protection Plan through all phases of plan implementation. Failure to comply with any condition of the Executive Director's approval, whether or not in contradiction of any "construction notes," is a violation of TCEQ regulations and any violation is subject to administrative rules, orders, and penalties as provided under Title 30, Texas Administrative Code § 213.10 (relating to Enforcement). Such violations may also be subject to civil penalties and injunction. The following/listed "construction notes" in no way represent an approved exception by the Executive Director to any part of Title 30 Texas Administrative Code, Chapters 213 and 217, or any other TCEQ applicable regulation.

1. This Organized Sewage Collection System (SCS) must be constructed in accordance with 30 Texas Administrative Code (TAC) §213.5(c), the Texas Commission on Environmental Quality's (TCEQ) Edwards Aquifer Rules and any local government standard specifications.

2. All contractors conducting regulated activities associated with this proposed regulated project must be provided with copies of the SCS plan and the TCEQ letter indicating the specific conditions of its approval. During the course of these regulated activities, the contractors must be required to keep on-site copies of the plan and the approval letter.

3. A written notice of construction must be submitted to the presiding TCEQ regional office at least 48 hours prior to the start of any regulated activities. This notice must include:
   - the name of the approved project;
   - the activity start date; and
   - the contact information of the prime contractor.

4. Any modification to the activities described in the referenced SCS application following the date of approval may require the submittal of an SCS application to modify this approval, including the payment of appropriate fees and all information necessary for its review and approval.

5. Prior to beginning any construction activity, all temporary erosion and sedimentation (E&S) control measures must be properly installed and maintained in accordance with the manufacturers specifications. These controls must remain in place until the disturbed areas have been permanently stabilized.

6. If any sensitive features are discovered during the wastewater line trenching activities, all regulated activities near the sensitive feature must be suspended immediately. The applicant must immediately notify the appropriate regional office of the TCEQ of the feature discovered. A geologist's assessment of the location and extent of the feature discovered must be reported to that regional office in writing and the applicant must submit a plan for ensuring the structural integrity of the sewer line or for modifying the proposed collection system alignment around the feature. The regulated activities near the sensitive feature may not proceed until the

executive director has reviewed and approved the methods proposed to protect the sensitive feature and the Edwards Aquifer from any potentially adverse impacts to water quality while maintaining the structural integrity of the line.

7. Sewer lines located within or crossing the 5-year floodplain of a drainage way will be protected from inundation and stream velocities which could cause erosion and scouring of backfill. The trench must be capped with concrete to prevent scouring of backfill, or the sewer lines must be encased in concrete. All concrete shall have a minimum thickness of 6 inches.

8. Blasting procedures for protection of existing sewer lines and other utilities will be in accordance with the National Fire Protection Association criteria. Sand is not allowed as bedding or backfill in trenches that have been blasted. If any existing sewer lines are damaged, the lines must be repaired and retested.

9. All manholes constructed or rehabilitated on this project must have watertight size on size resilient connectors allowing for differential settlement. If manholes are constructed within the 100-year floodplain, the cover must have a gasket and be bolted to the ring. Where gasketed manhole covers are required for more than three manholes in sequence or for more than 1500 feet, alternate means of venting will be provided. Bricks are not an acceptable construction material for any portion of the manhole.

   The diameter of the manholes must be a minimum of four feet and the manhole for entry must have a minimum clear opening diameter of 30 inches. These dimensions and other details showing compliance with the commission's rules concerning manholes and sewer line/manhole inverts described in 30 TAC §217.55 are included on Plan Sheet __ of __.

   It is suggested that entrance into manholes in excess of four feet deep be accomplished by means of a portable ladder. The inclusion of steps in a manhole is prohibited.

10. Where water lines and new sewer line are installed with a separation distance closer than nine feet (i.e., water lines crossing wastewater lines, water lines paralleling wastewater lines, or water lines next to manholes) the installation must meet the requirements of 30 TAC §217.53(d) (Pipe Design) and 30 TAC §290.44(e) (Water Distribution).

11. Where sewers lines deviate from straight alignment and uniform grade all curvature of sewer pipe must be achieved by the following procedure which is recommended by the pipe manufacturer: _____.

    If pipe flexure is proposed, the following method of preventing deflection of the joint must be used: _____.

    Specific care must be taken to ensure that the joint is placed in the center of the trench and properly bedded in accordance with 30 TAC §217.54.

12. New sewage collection system lines must be constructed with stub outs for the connection of anticipated extensions. The location of such stub outs must be marked on the ground such that their location can be easily determined at the time of connection of the extensions. Such stub outs must be manufactured wyes or tees that are compatible in size and material with both the sewer line and the extension. At the time of original construction, new stub-outs must be constructed sufficiently to extend beyond the end of the street pavement. All stub-outs must be sealed with a manufactured cap to prevent leakage. Extensions that were not anticipated at the time of original construction or that are to be connected to an existing sewer line not furnished with stub outs must be connected using a manufactured saddle and in accordance with accepted plumbing techniques.

    If no stub-out is present an alternate method of joining laterals is shown in the detail on Plan Sheet __ of __. (For potential future laterals).

    The private service lateral stub-outs must be installed as shown on the plan and profile sheets on Plan Sheet __ of __ and marked after backfilling as shown in the detail on Plan Sheet __ of __.

13. Trenching, bedding and backfill must conform with 30 TAC §217.54. The bedding and backfill for flexible pipe must comply with the standards of ASTM D-2321, Classes IA, IB, II or III. Rigid pipe bedding must comply with the requirements of ASTM C 12 (ANSI A 106.2) classes A, B or C.

14. Sewer lines must be tested from manhole to manhole. When a new sewer line is connected to an existing stub or clean-out, it must be tested from existing manhole to new manhole. If a stub or clean-out is used at the end of the proposed sewer line, no private service attachments may be connected between the last manhole and the cleanout unless it can be certified as conforming with the provisions of 30 TAC §213.5(c)(3)(E).

15. All sewer lines must be tested in accordance with 30 TAC §217.57. The engineer must retain copies of all test results which must be made available to the executive director upon request. The engineer must certify in writing that all wastewater lines have passed all required testing to the appropriate regional office within 30 days of test completion and prior to use of the new collection system. Testing method will be:
    (a) For a collection system pipe that will transport wastewater by gravity flow, the design must specify an infiltration and exfiltration test or a low-pressure air test. A test must conform to the following requirements:
        (1) *Low Pressure Air Test.*
            (A) A low pressure air test must follow the procedures described in American Society For Testing And Materials (ASTM) C-828, ASTM C-924, or ASTM F-1417 or other procedure approved by the executive director, except as to testing times as required in Table C.3 in subparagraph (C) of this paragraph or Equation C.3 in subparagraph (B)(ii) of this paragraph.
            (B) For sections of collection system pipe less than 36 inch average inside diameter, the following procedure must apply, unless a pipe is to be tested as required by paragraph (2) of this subsection.
                (i) A pipe must be pressurized to 3.5 pounds per square inch (psi) greater than the pressure exerted by groundwater above the pipe.
                (ii) Once the pressure is stabilized, the minimum time allowable for the pressure to drop from 3.5 psi gauge to 2.5 psi gauge is computed from the following equation:

Equation C.3 $$T = \frac{0.085 \times D \times K}{Q}$$

Where:

T = time for pressure to drop 1.0 pound per square inch gauge in seconds
K = 0.000419 X D X L, but not less than 1.0
D = average inside pipe diameter in inches

L = length of line of same size being tested, in feet
Q = rate of loss, 0.0015 cubic feet per minute per square foot internal surface

(C) Since a K value of less than 1.0 may not be used, the minimum testing time for each pipe diameter is shown in the following Table C.3:

Pipe Diameter *(inches)*	Minimum Time *(seconds)*	Maximum Length for Minimum Time *(feet)*	Time for Longer Length *(seconds/foot)*
6	340	398	0.855
8	454	298	1.520
10	567	239	2.374
12	680	199	3.419
15	850	159	5.342
18	1020	133	7.693
21	1190	114	10.471
24	1360	100	13.676
27	1530	88	17.309
30	1700	80	21.369
33	1870	72	25.856

(D) An owner may stop a test if no pressure loss has occurred during the first 25% of the calculated testing time.
(E) If any pressure loss or leakage has occurred during the first 25% of a testing period, then the test must continue for the entire test duration as outlined above or until failure.
(F) Wastewater collection system pipes with a 27 inch or larger average inside diameter may be air tested at each joint instead of following the procedure outlined in this section.
(G) A testing procedure for pipe with an inside diameter greater than 33 inches must be approved by the executive director.

(2) *Infiltration/Exfiltration Test.*
(A) The total exfiltration, as determined by a hydrostatic head test, must not exceed 50 gallons per inch of diameter per mile of pipe per 24 hours at a minimum test head of 2.0 feet above the crown of a pipe at an upstream manhole.
(B) An owner shall use an infiltration test in lieu of an exfiltration test when pipes are installed below the groundwater level.
(C) The total exfiltration, as determined by a hydrostatic head test, must not exceed 50 gallons per inch diameter per mile of pipe per 24 hours at a minimum test head of two feet above the crown of a pipe at an upstream manhole, or at least two feet above existing groundwater level, whichever is greater.
(D) For construction within a 25-year flood plain, the infiltration or exfiltration must not exceed 10 gallons per inch diameter per mile of pipe per 24 hours at the same minimum test head as in subparagraph (C) of this paragraph.
(E) If the quantity of infiltration or exfiltration exceeds the maximum quantity specified, an owner shall undertake remedial action in order to reduce

the infiltration or exfiltration to an amount within the limits specified. An owner shall retest a pipe following a remediation action.

(b) If a gravity collection pipe is composed of flexible pipe, deflection testing is also required. The following procedures must be followed:
(1) For a collection pipe with inside diameter less than 27 inches, deflection measurement requires a rigid mandrel.
(A) *Mandrel Sizing.*
(i) A rigid mandrel must have an outside diameter (OD) not less than 95% of the base inside diameter (ID) or average ID of a pipe, as specified in the appropriate standard by the ASTMs, American Water Works Association, UNI-BELL, or American National Standards Institute, or any related appendix.
(ii) If a mandrel sizing diameter is not specified in the appropriate standard, the mandrel must have an OD equal to 95% of the ID of a pipe. In this case, the ID of the pipe, for the purpose of determining the OD of the mandrel, must equal be the average outside diameter minus two minimum wall thicknesses for OD controlled pipe and the average inside diameter for ID controlled pipe.
(iii) All dimensions must meet the appropriate standard.
(B) *Mandrel Design.*
(i) A rigid mandrel must be constructed of a metal or a rigid plastic material that can withstand 200 psi without being deformed.
(ii) A mandrel must have nine or more odd number of runners or legs.
(iii) A barrel section length must equal at least 75% of the inside diameter of a pipe.
(iv) Each size mandrel must use a separate proving ring.
(C) *Method Options.*
(i) An adjustable or flexible mandrel is prohibited.
(ii) A test may not use television inspection as a substitute for a deflection test.
(iii) If requested, the executive director may approve the use of a deflectometer or a mandrel with removable legs or runners on a case-by-case basis.
(2) For a gravity collection system pipe with an inside diameter 27 inches and greater, other test methods may be used to determine vertical deflection.
(3) A deflection test method must be accurate to within plus or minus 0.2% deflection.
(4) An owner shall not conduct a deflection test until at least 30 days after the final backfill.
(5) Gravity collection system pipe deflection must not exceed five percent (5%).
(6) If a pipe section fails a deflection test, an owner shall correct the problem and conduct a second test after the final backfill has been in place at least 30 days.

16. All manholes must be tested to meet or exceed the requirements of 30 TAC §217.58.
(a) All manholes must pass a leakage test.
(b) An owner shall test each manhole (after assembly and backfilling) for leakage, separate and independent of the collection system pipes, by hydrostatic exfiltration testing, vacuum testing, or other method approved by the executive director.
(1) Hydrostatic Testing.

(A) The maximum leakage for hydrostatic testing or any alternative test methods is 0.025 gallons per foot diameter per foot of manhole depth per hour.
(B) To perform a hydrostatic exfiltration test, an owner shall seal all wastewater pipes coming into a manhole with an internal pipe plug, fill the manhole with water, and maintain the test for at least one hour.
(C) A test for concrete manholes may use a 24-hour wetting period before testing to allow saturation of the concrete.
(2) Vacuum Testing.
(A) To perform a vacuum test, an owner shall plug all lift holes and exterior joints with a non-shrink grout and plug all pipes entering a manhole.
(B) No grout must be placed in horizontal joints before testing.
(C) Stub-outs, manhole boots, and pipe plugs must be secured to prevent movement while a vacuum is drawn.
(D) An owner shall use a minimum 60 inch/lb torque wrench to tighten the external clamps that secure a test cover to the top of a manhole.
(E) A test head must be placed at the inside of the top of a cone section, and the seal inflated in accordance with the manufacturer's recommendations.
(F) There must be a vacuum of 10 inches of mercury inside a manhole to perform a valid test.
(G) A test does not begin until after the vacuum pump is off.
(H) A manhole passes the test if after 2.0 minutes and with all valves closed, the vacuum is at least 9.0 inches of mercury.

17. All private service laterals must be inspected and certified in accordance with 30 TAC §213.5(c)(3)(I). After installation of and, prior to covering and connecting a private service lateral to an existing organized sewage collection system, a Texas Licensed Professional Engineer, Texas Registered Sanitarian, or appropriate city inspector must visually inspect the private service lateral and the connection to the sewage collection system, and certify that it is constructed in conformity with the applicable provisions of this section. The owner of the collection system must maintain such certifications for five years and forward copies to the appropriate regional office upon request. Connections may only be made to an approved sewage collection system.

Austin Regional Office 12100 Park 35 Circle, Building A Austin, Texas 78753-1808 Phone (512) 339-2929 Fax (512) 339-3795	San Antonio Regional Office 14250 Judson Road San Antonio, Texas 78233-4480 Phone (210) 490-3096 Fax (210) 545-4329

THESE GENERAL CONSTRUCTION NOTES MUST BE INCLUDED ON THE CONSTRUCTION PLANS PROVIDED TO THE CONTRACTOR AND ALL SUBCONTRACTORS.

Texas Commission on Environmental Quality
Water Pollution Abatement Plan
General Construction Notes

Edwards Aquifer Protection Program Construction Notes – Legal Disclaimer

The following/listed "construction notes" are intended to be advisory in nature only and do not constitute an approval or conditional approval by the Executive Director (ED), nor do they constitute a comprehensive listing of rules or conditions to be followed during construction. Further actions may be required to achieve compliance with TCEQ regulations found in Title 30, Texas Administrative Code (TAC), Chapters 213 and 217, as well as local ordinances and regulations providing for the protection of water quality. Additionally, nothing contained in the following/listed "construction notes" restricts the powers of the ED, the commission or any other governmental entity to prevent, correct, or curtail activities that result or may result in pollution of the Edwards Aquifer or hydrologically connected surface waters. The holder of any Edwards Aquifer Protection Plan containing "construction notes" is still responsible for compliance with Title 30, TAC, Chapters 213 or any other applicable TCEQ regulation, as well as all conditions of an Edwards Aquifer Protection Plan through all phases of plan implementation. Failure to comply with any condition of the ED's approval, whether or not in contradiction of any "construction notes," is a violation of TCEQ regulations and any violation is subject to administrative rules, orders, and penalties as provided under Title 30, TAC § 213.10 (relating to Enforcement). Such violations may also be subject to civil penalties and injunction. The following/listed "construction notes" in no way represent an approved exception by the ED to any part of Title 30 TAC, Chapters 213 and 217, or any other TCEQ applicable regulation

1. A written notice of construction must be submitted to the TCEQ regional office at least 48 hours prior to the start of any regulated activities. This notice must include:
   - the name of the approved project;
   - the activity start date; and
   - the contact information of the prime contractor.

2. All contractors conducting regulated activities associated with this project must be provided with complete copies of the approved Water Pollution Abatement Plan (WPAP) and the TCEQ letter indicating the specific conditions of its approval. During the course of these regulated activities, the contractors are required to keep on-site copies of the approved plan and approval letter.

3. If any sensitive feature(s) (caves, solution cavity, sink hole, etc.) is discovered during construction, all regulated activities near the sensitive feature must be suspended immediately. The appropriate TCEQ regional office must be immediately notified of any sensitive features encountered during construction. Construction activities may not be resumed until the TCEQ has reviewed and approved the appropriate protective measures in order to protect any sensitive feature and the Edwards Aquifer from potentially adverse impacts to water quality.

4. No temporary or permanent hazardous substance storage tank shall be installed within 150 feet of a water supply source, distribution system, well, or sensitive feature.

5. Prior to beginning any construction activity, all temporary erosion and sedimentation (E&S) control measures must be properly installed and maintained in accordance with the approved plans and manufacturers specifications. If inspections indicate a control has been used inappropriately, or incorrectly, the applicant must replace or modify the control for site situations. These controls must remain in place until the disturbed areas have been permanently stabilized.

6. Any sediment that escapes the construction site must be collected and properly disposed of before the next rain event to ensure it is not washed into surface streams, sensitive features, etc.

7. Sediment must be removed from the sediment traps or sedimentation basins not later than

when it occupies 50% of the basin's design capacity.

8. Litter, construction debris, and construction chemicals exposed to stormwater shall be prevented from being discharged offsite.

9. All spoils (excavated material) generated from the project site must be stored on-site with proper E&S controls. For storage or disposal of spoils at another site on the Edwards Aquifer Recharge Zone, the owner of the site must receive approval of a water pollution abatement plan for the placement of fill material or mass grading prior to the placement of spoils at the other site.

10. If portions of the site will have a temporary or permanent cease in construction activity lasting longer than 14 days, soil stabilization in those areas shall be initiated as soon as possible prior to the 14th day of inactivity. If activity will resume prior to the 21st day, stabilization measures are not required. If drought conditions or inclement weather prevent action by the 14th day, stabilization measures shall be initiated as soon as possible.

11. The following records shall be maintained and made available to the TCEQ upon request:
    - the dates when major grading activities occur;
    - the dates when construction activities temporarily or permanently cease on a portion of the site; and
    - the dates when stabilization measures are initiated.

12. The holder of any approved Edward Aquifer protection plan must notify the appropriate regional office in writing and obtain approval from the executive director prior to initiating any of the following:

    A. any physical or operational modification of any water pollution abatement structure(s), including but not limited to ponds, dams, berms, sewage treatment plants, and diversionary structures;

    B. any change in the nature or character of the regulated activity from that which was originally approved or a change which would significantly impact the ability of the plan to prevent pollution of the Edwards Aquifer;

    C. any development of land previously identified as undeveloped in the original water pollution abatement plan.

Austin Regional Office 12100 Park 35 Circle, Building A Austin, Texas 78753-1808 Phone (512) 339-2929 Fax (512) 339-3795	San Antonio Regional Office 14250 Judson Road San Antonio, Texas 78233-4480 Phone (210) 490-3096 Fax (210) 545-4329

THESE GENERAL CONSTRUCTION NOTES MUST BE INCLUDED ON THE CONSTRUCTION PLANS PROVIDED TO THE CONTRACTOR AND ALL SUBCONTRACTORS.

NO. | REVISION | DATE

STATE OF TEXAS
JENNIFER C. FRANKLIN
116838
LICENSED
PROFESSIONAL ENGINEER
9-25-24

PAPE-DAWSON ENGINEERS
AUSTIN | SAN ANTONIO | HOUSTON | FORT WORTH | DALLAS
10801 N MOPAC EXPY, BLDG 3, STE 200 | AUSTIN, TX 78759 | 512.454.8711
TBPE FIRM REGISTRATION #470 | TBPLS FIRM REGISTRATION #10028801

RANCHO DEL CIELO - PHASE 4B
WILLIAMSON COUNTY, TEXAS
CONSTRUCTION NOTES 3 OF 3

CITY JOB No.
JOB NO. 51118-61
DATE SEPTEMBER 2024
DESIGNER TS
CHECKED DRAWN CE/JM
SHEET 7 OF 36

Date: Sep 24, 2024, 3:56pm User ID: tstephens
File: H:\Projects\5111\61\60_Phase 5\301 Construction Documents\Civil\CN51118-61.dwg

THIS DOCUMENT HAS BEEN PRODUCED FROM MATERIAL THAT WAS STORED AND/OR TRANSMITTED ELECTRONICALLY AND MAY HAVE BEEN INADVERTENTLY ALTERED. RELY ONLY ON FINAL HARDCOPY MATERIALS BEARING THE CONSULTANT'S ORIGINAL SIGNATURE AND SEAL.

SCALE: 1"= 40'

0' 40' 80' 120'

LEGEND

PROPOSED EASEMENT

DISTRICT BOUNDARY

NOTES

1. UPON PROJECT FINAL ACCEPTANCE, OFFSITE WATER AND WASTEWATER EASEMENTS TO BE CONVEYED TO THE CITY OF JARRELL AND DRAINAGE EASEMENTS TO BE CONVEYED TO THE RANCHO DEL CIELO MUNICIPAL UTILITY DISTRICT.

NO.	REVISION	DATE

STATE OF TEXAS
JENNIFER C. FRANKLIN
118838
LICENSED PROFESSIONAL ENGINEER
9-25-24

PAPE-DAWSON ENGINEERS
AUSTIN I SAN ANTONIO I HOUSTON I FORT WORTH I DALLAS
10801 N MOPAC EXPY, BLDG 3, STE 200 I AUSTIN, TX 78759 I 512.454.8711
TBPE FIRM REGISTRATION #470 I TBPLS FIRM REGISTRATION #10028801

RANCHO DEL CIELO - PHASE 4B

WILLIAMSON COUNTY, TEXAS

RANCHO DEL CIELO MUD EASEMENT & PROPERTY REVIEW 1 OF 2

CITY JOB No. _____
JOB NO. 51118-61
DATE SEPTEMBER 2024
DESIGNER TS
CHECKED _____ DRAWN CE/JM
SHEET 8 OF 36

Date: Sep 24, 2024, 3:56pm User ID: tstephens
File: H:\Projects\51118\60\Phase 5\301 Construction Documents\Civil\DPS1118-61.dwg

THIS DOCUMENT HAS BEEN PRODUCED FROM MATERIAL THAT WAS STORED AND/OR TRANSMITTED ELECTRONICALLY AND MAY HAVE BEEN INADVERTENTLY ALTERED. RELY ONLY ON FINAL HARDCOPY MATERIALS BEARING THE CONSULTANT'S ORIGINAL SIGNATURE AND SEAL.

SCALE: 1"= 40'

0' 40' 80' 120'

LEGEND

PROPOSED EASEMENT

DISTRICT BOUNDARY

NOTES

1. UPON PROJECT FINAL ACCEPTANCE, OFFSITE WATER AND WASTEWATER EASEMENTS TO BE CONVEYED TO THE CITY OF JARRELL AND DRAINAGE EASEMENTS TO BE CONVEYED TO THE RANCHO DEL CIELO MUNICIPAL UTILITY DISTRICT.

NO.	REVISION	DATE

STATE OF TEXAS
JENNIFER C. FRANKLIN
118838
LICENSED
PROFESSIONAL ENGINEER
9-25-24

PAPE-DAWSON ENGINEERS
AUSTIN | SAN ANTONIO | HOUSTON | FORT WORTH | DALLAS
10801 N MOPAC EXPY, BLDG 3, STE 200 | AUSTIN, TX 78759 | 512.454.8711
TBPE FIRM REGISTRATION #470 | TBPLS FIRM REGISTRATION #10028801

RANCHO DEL CIELO - PHASE 4B
WILLIAMSON COUNTY, TEXAS

RANCHO DEL CIELO MUD EASEMENT
& PROPERTY REVIEW 2 OF 2

CITY JOB No.
JOB NO. 51118-61
DATE SEPTEMBER 2024
DESIGNER TS
CHECKED DRAWN CE/JM
SHEET 9 OF 36

Date: Sep 24, 2024, 3:56pm User ID: stephens
File: H:\Projects\311\18\60_Phase 5\301 Construction Documents\Civil\DP51118-61.dwg
THIS DOCUMENT HAS BEEN PRODUCED FROM MATERIAL THAT WAS STORED AND/OR TRANSMITTED ELECTRONICALLY AND MAY HAVE BEEN INADVERTENTLY ALTERED. RELY ONLY ON FINAL HARDCOPY MATERIALS BEARING THE CONSULTANT'S ORIGINAL SIGNATURE AND SEAL.

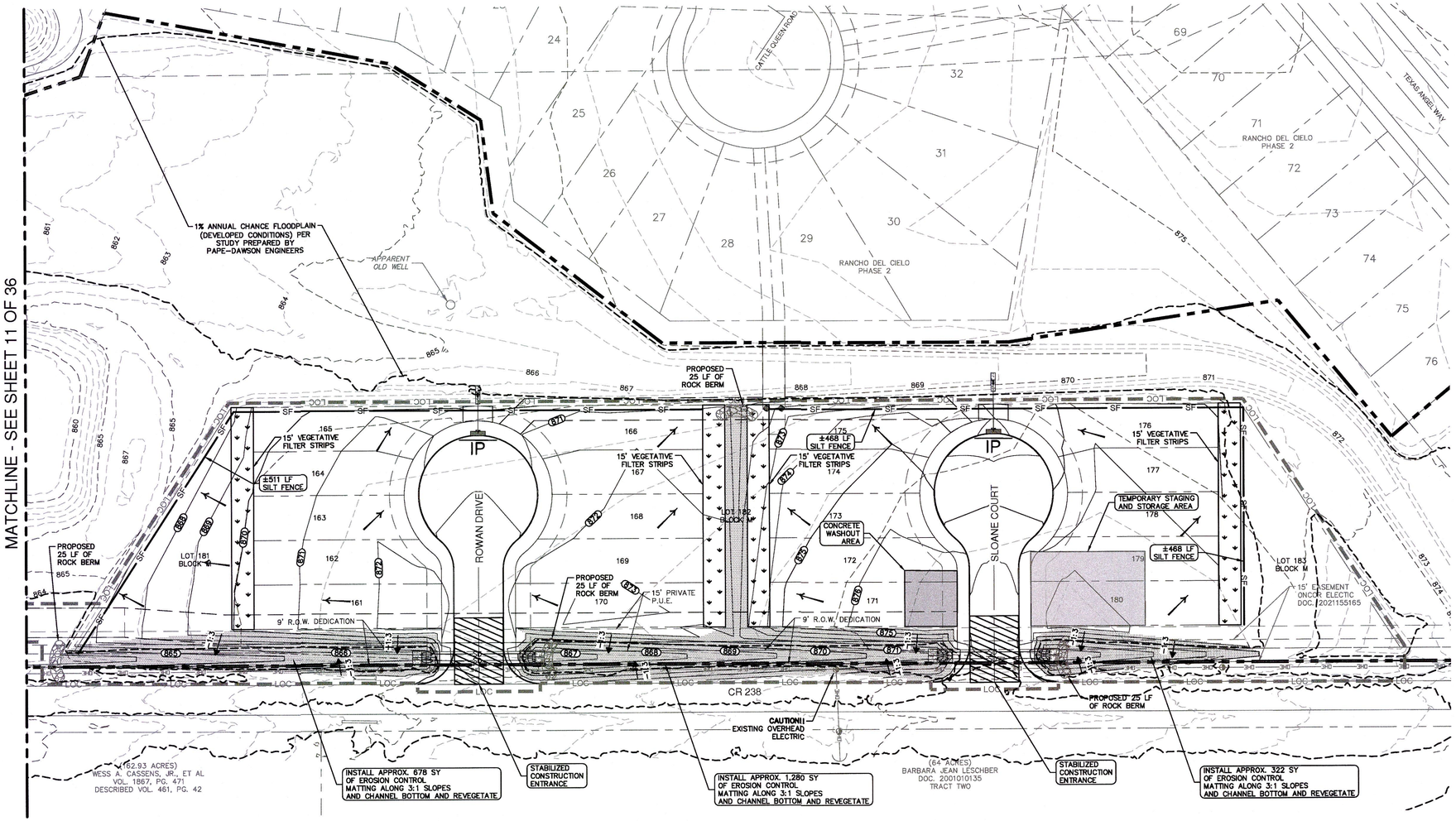

SCALE: 1"= 40'

0' 40' 80' 120'

LEGEND

- LOC — LIMITS OF CONSTRUCTION
- SF — SILT FENCE
- SF — SILT FENCE WITH J-HOOK
- STABILIZED CONSTRUCTION ENTRANCE
- VEGETATIVE FILTER STRIP
- ROCK BERM
- EROSION CONTROL MATTING
- IP — INLET PROTECTION
- FLOW ARROW
- 786 — EXISTING CONTOUR LINE
- 786 — PROPOSED CONTOUR LINE
- 1% ANNUAL CHANCE FLOODPLAIN (DEVELOPED CONDITIONS) PER STUDY PREPARED BY PAPE-DAWSON ENGINEERS

NOTES

1. REFER TO DISTRICT GENERAL NOTE #10 ON SHEET 6 REGARDING REVEGETATION OF DISTURBED AREAS, TOP SOIL, AND TEMPORARY EROSION CONTROL MATTING REQUIREMENTS FOR ALL 4:1 OR STEEPER SLOPES AND CHANNEL FLOWLINES.
2. FROM SHEET 5, STREET AND DRAINAGE NOTE #10, ANY FILL TO BE PLACED IN EXCESS OF 8 INCHES DEEP SHALL BE PLACED IN CONFORMANCE WITH THE REQUIREMENTS OF FHA/HUD DATA SHEET 79G. A LETTER OF CERTIFICATION FROM A QUALIFIED GEOTECHNICAL ENGINEER SHALL BE PRESENTED UPON COMPLETION OF FILLING ACTIVITIES.

NO.	REVISION	DATE

STATE OF TEXAS
JENNIFER C. FRANKLIN
118838
LICENSED PROFESSIONAL ENGINEER
9-30-24

PAPE-DAWSON ENGINEERS
AUSTIN | SAN ANTONIO | HOUSTON | FORT WORTH | DALLAS
10801 N MOPAC EXPY, BLDG 3, STE 200 | AUSTIN, TX 78759 | 512.454.8711
TBPE FIRM REGISTRATION #470 | TBPLS FIRM REGISTRATION #10028801

RANCHO DEL CIELO - PHASE 4B
WILLIAMSON COUNTY, TEXAS

EROSION & SEDIMENTATION CONTROL PLAN 1 OF 2

CITY JOB No.
JOB NO. 51118-61
DATE SEPTEMBER 2024
DESIGNER TS
CHECKED DRAWN CE/JM
SHEET 10 OF 36

Date: Sep 30, 2024, 3:55pm User ID: tstephens
File: H:\Projects\51118\60_Phase 3\301 Construction Documents\Civil\EC51118-61.dwg

THIS DOCUMENT HAS BEEN PRODUCED FROM MATERIAL THAT WAS STORED AND/OR TRANSMITTED ELECTRONICALLY AND MAY HAVE BEEN INADVERTENTLY ALTERED. RELY ONLY ON FINAL HARDCOPY MATERIALS BEARING THE CONSULTANT'S ORIGINAL SIGNATURE AND SEAL.

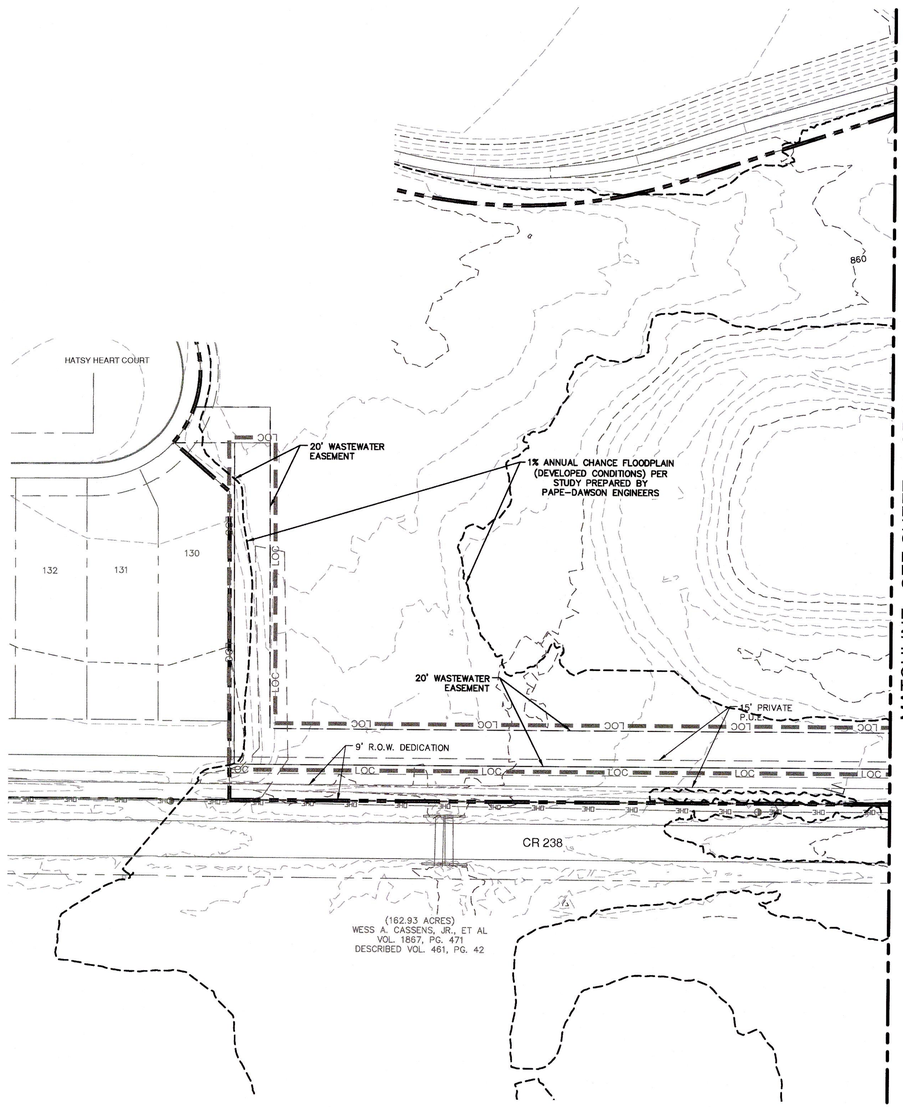

SCALE: 1" = 40'

0' 40' 80' 120'

LEGEND

- LOC — LIMITS OF CONSTRUCTION
- SF — SILT FENCE
- SF — SILT FENCE WITH J-HOOK
- STABILIZED CONSTRUCTION ENTRANCE
- VEGETATIVE FILTER STRIP
- ROCK BERM
- EROSION CONTROL MATTING
- IP — INLET PROTECTION
- FLOW ARROW
- 786 — EXISTING CONTOUR LINE
- PROPOSED CONTOUR LINE
- 1% ANNUAL CHANCE FLOODPLAIN (DEVELOPED CONDITIONS) PER STUDY PREPARED BY PAPE-DAWSON ENGINEERS

NOTES

1. REFER TO DISTRICT GENERAL NOTE #10 ON SHEET 5 REGARDING REVEGETATION OF DISTURBED AREAS, TOP SOIL, AND TEMPORARY EROSION CONTROL MATTING REQUIREMENTS FOR ALL 4:1 OR STEEPER SLOPES AND CHANNEL FLOWLINES.
2. FROM SHEET 5, STREET AND DRAINAGE NOTE #10, ANY FILL TO BE PLACED IN EXCESS OF 8 INCHES DEEP SHALL BE PLACED IN CONFORMANCE WITH THE REQUIREMENTS OF FHA/HUD DATA SHEET 79G. A LETTER OF CERTIFICATION FROM A QUALIFIED GEOTECHNICAL ENGINEER SHALL BE PRESENTED UPON COMPLETION OF FILLING ACTIVITIES.

NO.	REVISION	DATE

STATE OF TEXAS
JENNIFER C. FRANKLIN
118838
LICENSED PROFESSIONAL ENGINEER
9-30-24

PAPE-DAWSON ENGINEERS
AUSTIN | SAN ANTONIO | HOUSTON | FORT WORTH | DALLAS
10801 N MOPAC EXPY, BLDG 3, STE 200 | AUSTIN, TX 78759 | 512.454.8711
TBPE FIRM REGISTRATION #470 | TBPLS FIRM REGISTRATION #100288801

RANCHO DEL CIELO - PHASE 4B
WILLIAMSON COUNTY, TEXAS

EROSION & SEDIMENTATION CONTROL PLAN 2 OF 2

CITY JOB No.
JOB NO. 51118-61
DATE SEPTEMBER 2024
DESIGNER TS
CHECKED DRAWN CE/JM
SHEET 11 OF 36

Date: Sep 30, 2024, 3:55pm User ID: tstephens
File: H:\Projects\51\18\60_Phase 5\301 Construction Documents\Civil\EC51118-61.dwg

THIS DOCUMENT HAS BEEN PRODUCED FROM MATERIAL THAT WAS STORED AND/OR TRANSMITTED ELECTRONICALLY AND MAY HAVE BEEN INADVERTENTLY ALTERED. RELY ONLY ON FINAL HARDCOPY MATERIALS BEARING THE CONSULTANT'S ORIGINAL SIGNATURE AND SEAL.

EXISTING CONDITIONS DRAINAGE STUDY

LEGEND

- SD — STORM DRAIN LINE
- SD — SD MANHOLE
- SD INLET
- DRAINAGE FLOW ARROW
- DRAINAGE AREA BOUNDARY
- EXISTING DRAINAGE AREA
- 786 — PROPOSED CONTOUR LINE
- 786 — EXISTING CONTOUR LINE
- TRAVEL PATH
- DA-X / 3.33 — DRAINAGE AREA DESIGNATION / AREA IN ACRES
- Tc — TIME OF CONCENTRATION

TIME OF CONCENTRATION CALCULATOR - EXISTING CONDITIONS

Drainage Number	Sheet Flow					Shallow Concentrated Flow					Channelized Flow				Total Time (min)	Lag Time (min)
	Length (ft)	Mannings "n"	P_2(in)	Slope (ft/ft)	Time (min)	Length (ft)	P/U	Slope (ft/ft)	Velocity (ft/s)	Time (min)	Length (ft)	Slope (ft/ft)	Velocity (ft/s)	Time (min)		
EX-1	100.0	0.15	3.44	0.020	9.4	3000.0	U	0.023	2.4	20.4	100.0	0.023	4.6	0.4	30.2	18.1
EX-2	100.0	0.15	3.44	0.010	12.5	1500.0	U	0.019	2.2	11.2	1400.0	0.016	3.8	6.1	44.8	26.9
											3600.0	0.011	4.0	15.0		

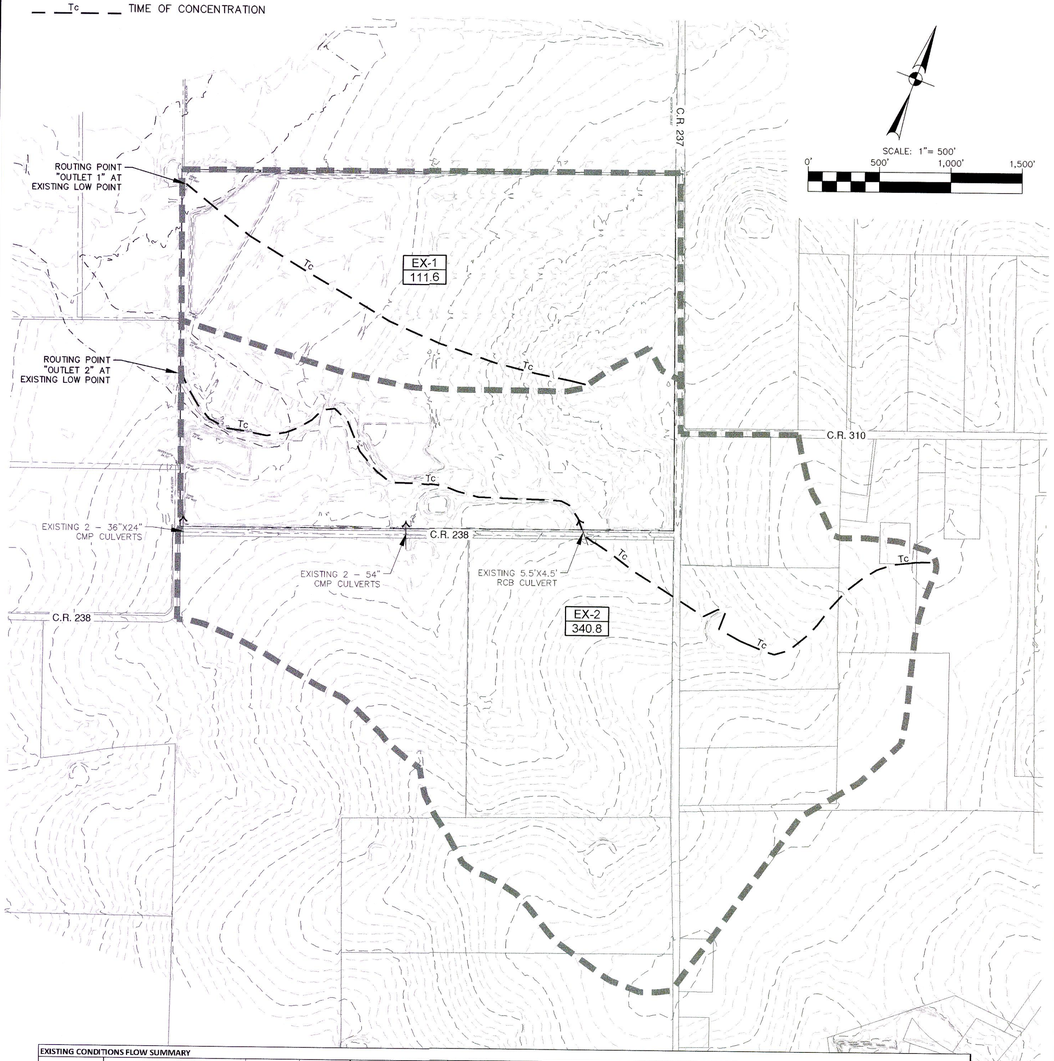

EXISTING CONDITIONS FLOW SUMMARY

Hydrologic Element	Element Description	Downstream Element	Drainage Area (ac)	Composite Curve Number CN	Lag Time (min)	Impervious Cover %	Cumulative Area (ac)	100 YEAR STORM		25 YEAR STORM		10 YEAR STORM		2 YEAR STORM	
								Runoff Per Drainage Area (cfs)	Routed Cumulative Runoff (cfs)	Runoff Per Drainage Area (cfs)	Routed Cumulative Runoff (cfs)	Runoff Per Drainage Area (cfs)	Routed Cumulative Runoff (cfs)	Runoff Per Drainage Area (cfs)	Routed Cumulative Runoff (cfs)
EX-1	Drainage Area EX-1	OUTLET 1	111.6	80	18.1	1.0%		580		403		297		122	
OUTLET 1	**Outlet 1 @ Existing Low Point**						**111.6**		**580**		**403**		**297**		**122**
EX-2	Drainage Area EX-2	OUTLET 2	340.8	80	26.9	2.9%		1476		1029		760		314	
OUTLET 2	**Outlet 2 @ Existing Low Point**						**340.8**		**1476**		**1029**		**760**		**314**

DEVELOPED CONDITIONS DRAINAGE STUDY

NOTES:

1. THE LOCATIONS OF EXISTING UNDERGROUND UTILITIES ARE SHOWN IN AN APPROXIMATE WAY ONLY AND HAVE NOT BEEN INDEPENDENTLY VERIFIED BY THE OWNER OR ITS REPRESENTATIVE. THE CONTRACTOR SHALL DETERMINE THE EXACT LOCATION OF ALL EXISTING UTILITIES BEFORE COMMENCING WORK, AND AGREES TO BE FULLY RESPONSIBLE FOR ANY AND ALL DAMAGES WHICH MIGHT BE ASSOCIATED BY THE CONTRACTOR'S FAILURE TO EXACTLY LOCATE AND PRESERVE ANY AND ALL UNDERGROUND UTILITIES.
2. EXISTING CONTOUR INFORMATION SHOWN IS AT 2 FOOT INTERVALS.
3. DRAINAGE CALCULATIONS ARE IN ACCORDANCE WITH THE 2018 WILLIAMSON COUNTY SUBDIVISION REGULATIONS, EFFECTIVE FOR THE RANCHO DEL CIELO PRELIMINARY PLAT SUBMITTED TO WILLIAMSON COUNTY ON OCTOBER 19, 2018 AND APPROVED AT THE WILLIAMSON COUNTY COMMISSIONERS COURT ON AUGUST 27, 2019.

TIME OF CONCENTRATION CALCULATOR - DEVELOPED CONDITIONS

Drainage Number	Sheet Flow					Shallow Concentrated Flow					Channelized/Pipe Flow				Total Time (min)	Lag Time (min)
	Length (ft)	Manning s "n"	P_2(in)	Slope (ft/ft)	Time (min)	Length (ft)	P/U	Slope (ft/ft)	Velocity (ft/s)	Time (min)	Length (ft)	Slope (ft/ft)	Velocity (ft/s)	Time (min)		
DA-1	100	0.15	3.44	0.011	12.0	130	U	0.013	1.8	1.2	4150	0.015	5.5	12.6	25.8	15.5
OS-1A	100	0.15	3.44	0.010	12.5	100	U	0.010	1.6	1.0	-	-	-	-	13.5	8.1
OS-1B	50	0.15	3.44	0.022	5.2	0	U	0.010	1.6	0.0	1455	0.02	5.7	4.2	9.4	5.6
DA-2A	65	0.15	3.44	0.015	7.5	75	U	0.013	1.8	0.7	1350	0.020	6.0	3.7	11.9	7.1
DA-2B	100	0.15	3.44	0.028	8.3	125	U	0.015	2.0	1.1	2425	0.020	6.0	6.7	16.1	9.7
OS-2	100	0.15	3.44	0.010	12.5	1500	U	0.019	2.2	11.2	1400	0.016	3.8	6.1	44.8	26.9
											3600	0.011	4.0	15.0		

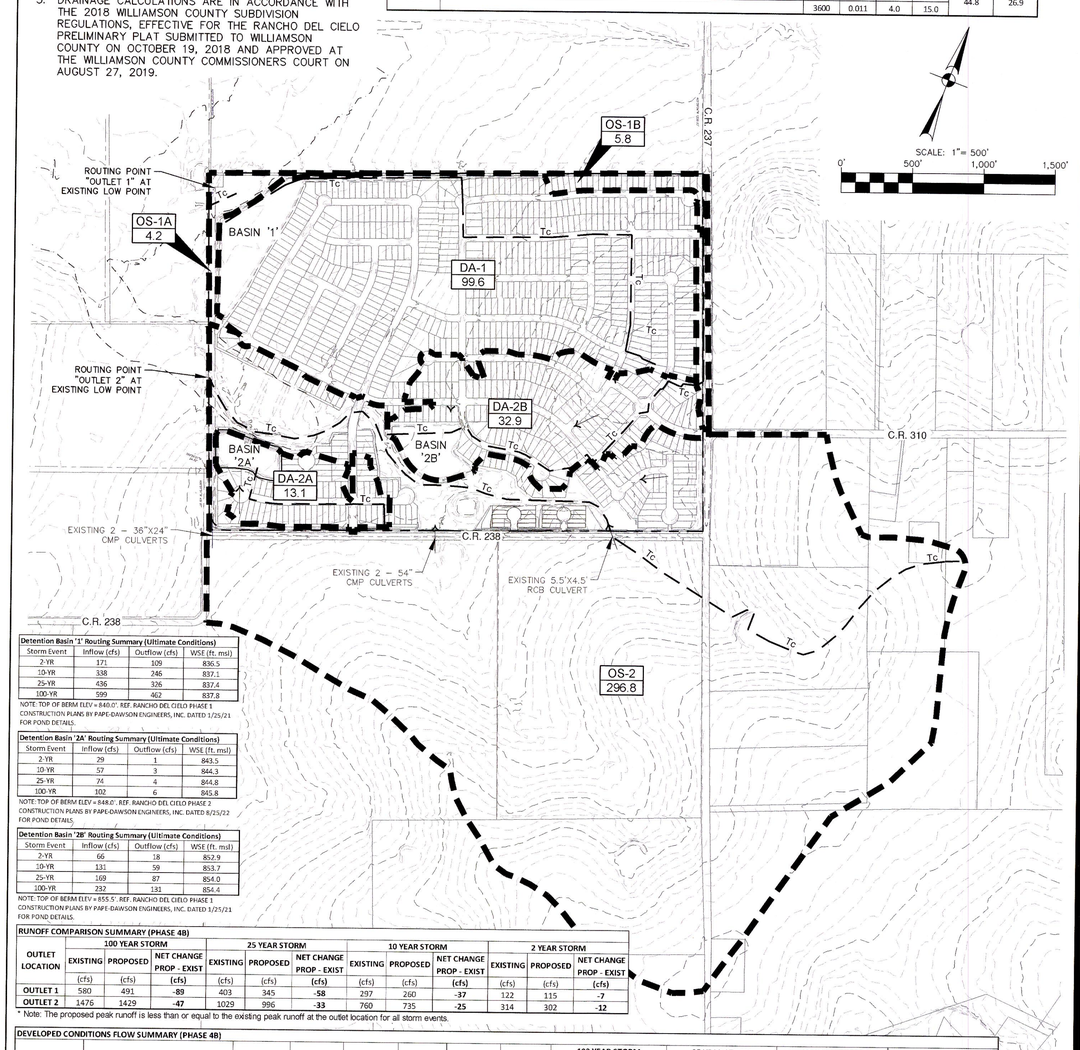

Detention Basin '1' Routing Summary (Ultimate Conditions)

Storm Event	Inflow (cfs)	Outflow (cfs)	WSE (ft. msl)
2-YR	171	109	836.5
10-YR	338	246	837.1
25-YR	436	326	837.4
100-YR	599	462	837.8

NOTE: TOP OF BERM ELEV = 840.0'. REF. RANCHO DEL CIELO PHASE 1 CONSTRUCTION PLANS BY PAPE-DAWSON ENGINEERS, INC. DATED 1/25/21 FOR POND DETAILS.

Detention Basin '2A' Routing Summary (Ultimate Conditions)

Storm Event	Inflow (cfs)	Outflow (cfs)	WSE (ft. msl)
2-YR	29	1	843.5
10-YR	57	3	844.3
25-YR	74	4	844.8
100-YR	102	6	845.8

NOTE: TOP OF BERM ELEV = 848.0'. REF. RANCHO DEL CIELO PHASE 2 CONSTRUCTION PLANS BY PAPE-DAWSON ENGINEERS, INC. DATED 8/25/22 FOR POND DETAILS.

Detention Basin '2B' Routing Summary (Ultimate Conditions)

Storm Event	Inflow (cfs)	Outflow (cfs)	WSE (ft. msl)
2-YR	66	18	852.9
10-YR	131	59	853.7
25-YR	169	87	854.0
100-YR	232	131	854.4

NOTE: TOP OF BERM ELEV = 855.5'. REF. RANCHO DEL CIELO PHASE 1 CONSTRUCTION PLANS BY PAPE-DAWSON ENGINEERS, INC. DATED 1/25/21 FOR POND DETAILS.

RUNOFF COMPARISON SUMMARY (PHASE 4B)

OUTLET LOCATION	100 YEAR STORM			25 YEAR STORM			10 YEAR STORM			2 YEAR STORM		
	EXISTING	PROPOSED	NET CHANGE PROP - EXIST	EXISTING	PROPOSED	NET CHANGE PROP - EXIST	EXISTING	PROPOSED	NET CHANGE PROP - EXIST	EXISTING	PROPOSED	NET CHANGE PROP - EXIST
	(cfs)	(cfs)	(cfs)	(cfs)	(cfs)	(cfs)	(cfs)	(cfs)	(cfs)	(cfs)	(cfs)	(cfs)
OUTLET 1	580	491	**-89**	403	345	**-58**	297	260	**-37**	122	115	**-7**
OUTLET 2	1476	1429	**-47**	1029	996	**-33**	760	735	**-25**	314	302	**-12**

* Note: The proposed peak runoff is less than or equal to the existing peak runoff at the outlet location for all storm events.

DEVELOPED CONDITIONS FLOW SUMMARY (PHASE 4B)

Hydrologic Element	Element Description	Downstream Element	Drainage Area (ac)	Composite Curve Number CN	Lag Time (min)	Impervious Cover %	Cumulative Area (ac)	100 YEAR STORM		25 YEAR STORM		10 YEAR STORM		2 YEAR STORM	
								Runoff Per Drainage Area (cfs)	Routed Cumulative Runoff (cfs)	Runoff Per Drainage Area (cfs)	Routed Cumulative Runoff (cfs)	Runoff Per Drainage Area (cfs)	Routed Cumulative Runoff (cfs)	Runoff Per Drainage Area (cfs)	Routed Cumulative Runoff (cfs)
OS-1A	Drainage Area OS-1A	OUTLET 1	4.2	80	8.1	0.0%		29		20		15		6	
OS-1B	Drainage Area OS-1B	OUTLET 1	6.0	80	5.6	49.0%		48		35		27		13	
DA-1	Drainage Area DA-1	BASIN 1	99.6	80	15.5	56.0%		599		436		338		171	
BASIN 1	Proposed Detention Basin 1	OUTLET 1							462		326		246		109
OUTLET 1	**Outlet 1 @ Existing Low Point**						**109.8**		**491**		**345**		**260**		**115**
OS-2	Drainage Area OS-2	OUTLET 2	296.8	80	26.9	7.5%		1295		906		673		284	
DA-2A	Drainage Area DA-2A	BASIN 2A	13.1	80	7.1	54.0%		102		74		57		29	
BASIN 2A	Proposed Detention Basin 2A	OUTLET 2							6		4		3		1
DA-2B	Drainage Area DA-2B	BASIN 2B	32.7	80	9.7	54.0%		232		169		131		66	
BASIN 2B	Proposed Detention Basin 2B	OUTLET 2							131		87		59		18
OUTLET 2	**Outlet 2 @ Existing Low Point**						**342.6**		**1429**		**996**		**735**		**302**

NO. REVISION | DATE

STATE OF TEXAS
JENNIFER C. FRANKLIN
118838
LICENSED PROFESSIONAL ENGINEER
9/25/24

PAPE-DAWSON ENGINEERS
AUSTIN | SAN ANTONIO | HOUSTON | FORT WORTH | DALLAS
10801 N MOPAC EXPY, BLDG 3, STE. 200 | AUSTIN, TX 78759 | 512.454.8711
TBPE FIRM REGISTRATION #470 | TBPLS FIRM REGISTRATION #10028801

RANCHO DEL CIELO - PHASE 4B
WILLIAMSON COUNTY, TEXAS
OVERALL DRAINAGE STUDY

CITY JOB No.
JOB NO. 51118-61
DATE SEPTEMBER 2024
DESIGNER TS
CHECKED ____ DRAWN CE/JM
SHEET 14 OF 36

Date: Sep 24, 2024, 4:00pm User ID: tstephens
File: H:\Projects\51118-001_Phase 4\301 Construction Documents\Civil\(2051118-61.dwg

THIS DOCUMENT HAS BEEN PRODUCED FROM MATERIAL THAT WAS STORED AND/OR TRANSMITTED ELECTRONICALLY AND MAY HAVE BEEN INADVERTENTLY ALTERED. RELY ONLY ON FINAL HARDCOPY MATERIALS BEARING THE CONSULTANT'S ORIGINAL SIGNATURE AND SEAL.

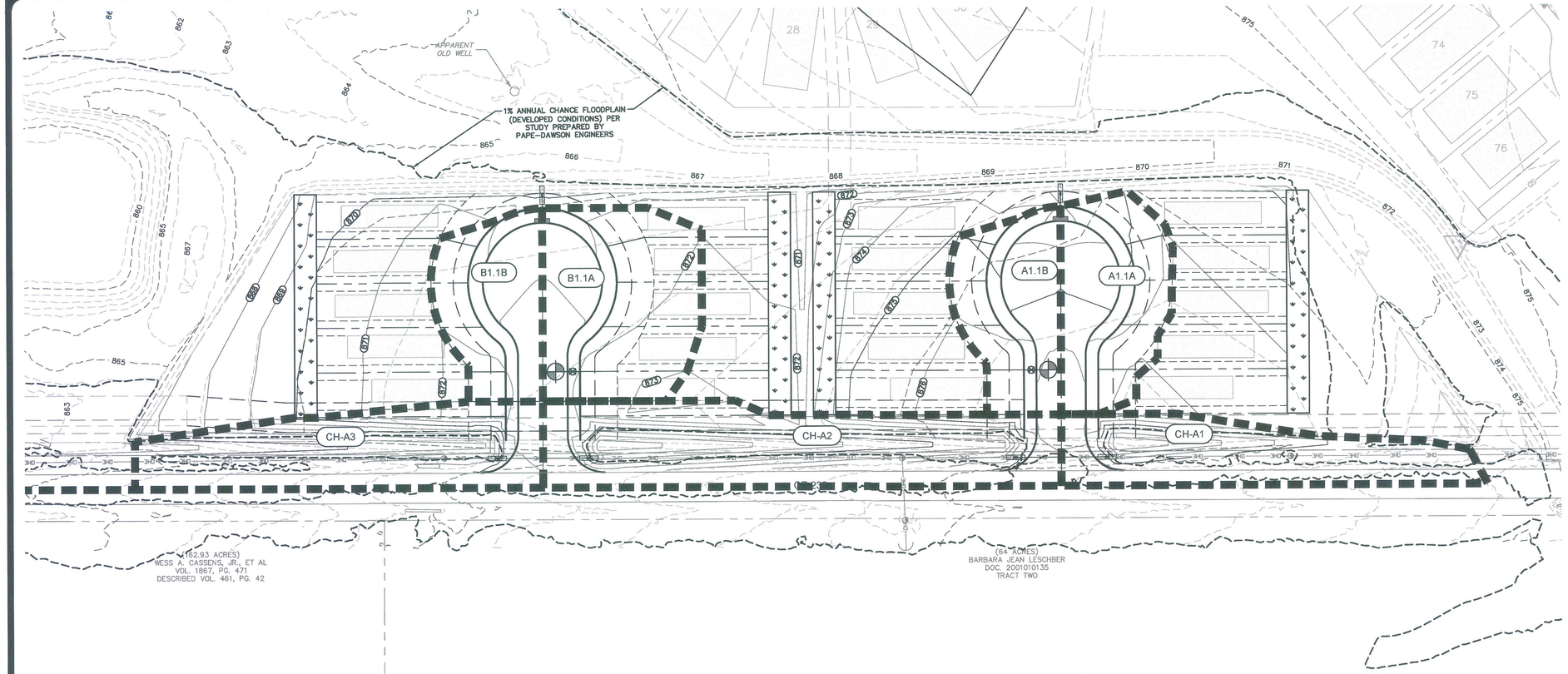

SCALE: 1" = 40'

0' 40' 80' 120'

LEGEND

- SD — STORM DRAIN LINE
- SD — SD MANHOLE
- SD INLET
- DRAINAGE FLOW ARROW
- DRAINAGE AREA BOUNDARY
- XX-X — DRAINAGE AREA
- PROPOSED CONTOUR LINE
- EXISTING CONTOUR LINE
- 1% ANNUAL CHANCE FLOODPLAIN (DEVELOPED CONDITIONS) PER STUDY PREPARED BY PAPE-DAWSON ENGINEERS.

NOTES

1. THE LOCATIONS OF EXISTING UNDERGROUND UTILITIES ARE SHOWN IN AN APPROXIMATE WAY ONLY AND HAVE NOT BEEN INDEPENDENTLY VERIFIED BY THE OWNER OR ITS REPRESENTATIVE. THE CONTRACTOR SHALL DETERMINE THE EXACT LOCATION OF ALL EXISTING UTILITIES BEFORE COMMENCING WORK, AND AGREES TO BE FULLY RESPONSIBLE FOR ANY AND ALL DAMAGES WHICH MIGHT BE ASSOCIATED BY THE CONTRACTOR'S FAILURE TO EXACTLY LOCATE AND PRESERVE ANY AND ALL UNDERGROUND UTILITIES.
2. EXISTING CONTOUR INFORMATION SHOWN IS AT 1 FOOT INTERVALS.

Rancho Del Cielo Phase 4B							10 year					25 year					100 year				
D.A.	AREA	# homes	L. Street	IC	PC	%IC	Pervious		Impervious		Weighted C	Pervious		Impervious		Weighted C	Pervious		Impervious		Weighted C
							C	PC * C	C	IC * C		C	PC * C	C	IC * C		C	PC * C	C	IC * C	
ULTIMATE CONDITION DRAINAGE AREAS																					
A1.1A	0.22	0.0	130	0.13	0.09	56.92%	0.35	0.03	0.82	0.10	0.62	0.39	0.04	0.87	0.11	0.66	0.46	0.04	0.96	0.12	0.74
A1.1B	0.19	0.0	130	0.12	0.07	61.13%	0.35	0.03	0.82	0.10	0.64	0.39	0.03	0.87	0.10	0.68	0.46	0.03	0.96	0.11	0.77
A1.1	0.41	0.0	260	0.24	0.17	58.87%	0.35	0.06	0.82	0.20	0.63	0.39	0.07	0.87	0.21	0.67	0.46	0.08	0.96	0.23	0.75
B1.1A	0.30	2.5	120	0.18	0.12	59.09%	0.35	0.04	0.82	0.15	0.63	0.39	0.05	0.87	0.15	0.67	0.46	0.06	0.96	0.17	0.76
B1.1B	0.18	0.0	120	0.11	0.07	62.35%	0.35	0.02	0.82	0.09	0.64	0.39	0.03	0.87	0.10	0.69	0.46	0.03	0.96	0.11	0.77
B1.1	0.48	2.5	240	0.29	0.19	60.32%	0.35	0.07	0.82	0.24	0.63	0.39	0.07	0.87	0.25	0.68	0.46	0.09	0.96	0.28	0.76
CH-A1	0.25	0.0	286	0.08	0.17	32.61%	0.35	0.06	0.82	0.07	0.50	0.39	0.07	0.87	0.07	0.55	0.46	0.08	0.96	0.08	0.62
CH-A2	0.42	0.0	348	0.12	0.30	28.83%	0.35	0.10	0.82	0.10	0.49	0.39	0.12	0.87	0.11	0.53	0.46	0.14	0.96	0.12	0.60
CH-A3	0.29	0.0	275	0.09	0.20	29.42%	0.35	0.07	0.82	0.07	0.49	0.39	0.08	0.87	0.07	0.53	0.46	0.09	0.96	0.08	0.61

DRAINAGE AREA	INLET NUMBER	AREA (acres)	COMPOSITE C			A·C10	A·C25	A·C100	SHEET FLOW				SHALLOW CONCENTRATED FLOW				CHANNELIZED FLOW					Cumulative	INTENSITY			DISCHARGE		
			C10	C25	C100				Length (ft)	Manning's (n)	Slope ft/ft	Tc (min)	Length (ft)	Paved/ Unpaved	Slope ft/ft	Tc (min)	Length (ft)	Manning's (n)	Slope ft/ft	Velocity ft/s	Tc (min)	Tc (min)	I 10yr (in/hr)	I 25yr (in/hr)	I 100yr (in/hr)	Q 10 (cfs)	Q 25 (cfs)	Q 100 (cfs)
ULTIMATE CONDITION DRAINAGE AREAS																												
A1.1A	A1.1A	0.22	0.62	0.66	0.74	0.14	0.15	0.16	43	0.24	0.031	5.9	0	U	0.010	0.0	90	0.02	0.020	4.1	0.4	6.25	8.1	9.5	11.9	1.1	1.4	2.0
A1.1B	A1.1B	0.19	0.64	0.68	0.77	0.12	0.13	0.15	35	0.24	0.015	6.7	0	U	0.010	0.0	156	0.02	0.012	3.2	0.8	7.49	7.6	9.0	11.4	0.9	1.2	1.7
A1.1	A1.1	0.41	0.63	0.67	0.75	0.26	0.28	0.31	-	-	-	-	-	-	-	-	-	-	-	-	-	7.49	7.6	9.0	11.4	2.0	2.5	3.5
B1.1A	B1.1A	0.30	0.63	0.67	0.76	0.19	0.20	0.23	50	0.24	0.034	6.4	0	U	0.010	0.0	83	0.02	0.017	3.8	0.4	6.76	7.9	9.3	11.7	1.5	1.9	2.6
B1.1B	B1.1B	0.18	0.64	0.69	0.77	0.12	0.12	0.14	35	0.24	0.015	6.7	0	U	0.010	0.0	146	0.02	0.017	3.8	0.6	7.31	7.7	9.1	11.4	0.9	1.1	1.6
B1.1	B1.1	0.48	0.63	0.68	0.76	0.30	0.33	0.37	-	-	-	-	-	-	-	-	-	-	-	-	-	7.31	7.7	9.1	11.4	2.3	3.0	4.2
CH-A1	CH-A1	0.25	0.50	0.55	0.62	0.13	0.14	0.16	10	0.24	0.020	2.2					230	-	-	4.0	1.0	5.00	8.6	10.1	12.5	1.1	1.4	2.0
CH-A2	CH-A2	0.42	0.49	0.53	0.60	0.20	0.22	0.25	10	0.24	0.020	2.2					285			3.0	1.6	5.00	8.6	10.1	12.5	1.7	2.2	3.2
CH-A3	CH-A3	0.29	0.49	0.53	0.61	0.14	0.15	0.18	10	0.24	0.020	2.2					240			4.5	0.9	5.00	8.6	10.1	12.5	1.2	1.6	2.2

PAPE-DAWSON ENGINEERS
AUSTIN | SAN ANTONIO | HOUSTON | FORT WORTH | DALLAS
10801 N MOPAC EXPY., BLDG 3, STE 200 | AUSTIN, TX 78759 | 512.454.8711
TBPE FIRM REGISTRATION #470 | TBPLS FIRM REGISTRATION #10028801

NO. REVISION DATE

STATE OF TEXAS
JENNIFER C. FRANKLIN
118838
LICENSED PROFESSIONAL ENGINEER
9-30-24

RANCHO DEL CIELO - PHASE 4B
WILLIAMSON COUNTY, TEXAS

DRAINAGE AREA MAP

CITY JOB No.
JOB NO. 51118-61
DATE SEPTEMBER 2024
DESIGNER TS
CHECKED DRAWN CE/JM
SHEET 15 OF 36

Date: Sep 30, 2024, 3:55pm User ID: tstephens
File: H:\Projects\511\18\60_Phase 5\301 Construction Documents\Civil\20511118-61.dwg

THIS DOCUMENT HAS BEEN PRODUCED FROM MATERIAL THAT WAS STORED AND/OR TRANSMITTED ELECTRONICALLY AND MAY HAVE BEEN INADVERTENTLY ALTERED. RELY ONLY ON FINAL HARDCOPY MATERIALS BEARING THE CONSULTANT'S ORIGINAL SIGNATURE AND SEAL.

STREET FLOW AND INLET CALCULATIONS
100 YEAR STORM

Inlet No.	Inlet Type	Drainage Area	Q 100 (cfs)	Q pass (cfs)	Q total (cfs)	STREET CAPACITY: Street Width F-F (ft)	Crown Type	Curb Height (ft)	Gutter Slope (%)	a (ft)	Yo (ft)	Crown Height (ft)	INLET ON GRADE CAPACITY: Eo	S'w	Sx	Se	LT	L	E	Qi	Qpass (cfs)	Pass to Inlet #	SUMP INLET CAPACITY: Qtotal (cfs)	CURB (with Depression) Length (ft)	d (ft)	d (ft) (d ≤ h + a)
ULTIMATE CONDITION DRAINAGE AREAS																										
A1.1A		0.22	2.0		2.0	33	P	0.50	1.20%	0.42	0.30	0.50	-	-	-	-	-	-	-	-	-					
A1.1B		0.19	1.7		1.7	33	P	0.50	1.20%	0.42	0.28	0.50	-	-	-	-	-	-	-	-	-					
A1.1	S-1	0.41	3.5		3.5	-	-	-	-	-	-	-	-	-	-	-	-	-	-	-	-		3.5	10	0.24	0.24
B1.1A		0.30	2.6		2.6	33	P	0.50	1.80%	0.42	0.31	0.50	-	-	-	-	-	-	-	-	-					
B1.1B		0.18	1.6		1.6	33	P	0.50	2.55%	0.42	0.24	0.50	-	-	-	-	-	-	-	-	-					
B1.1	S-1	0.48	4.2		4.2	-	-	-	-	-	-	-	-	-	-	-	-	-	-	-	-		4.2	10	0.27	0.27

STREET FLOW AND INLET CALCULATIONS
25 YEAR STORM

Inlet No.	Inlet Type	Drainage Area	Q 25 (cfs)	Q pass (cfs)	Q total (cfs)	STREET CAPACITY: Street Width F-F (ft)	Crown Type	Curb Height (ft)	Gutter Slope (%)	a (ft)	Yo (ft)	Crown Height (ft)	INLET ON GRADE CAPACITY: Eo	S'w	Sx	Se	LT	L	E	Qi	Qpass (cfs)	Pass to Inlet #	SUMP INLET CAPACITY: Qtotal (cfs)	CURB (with Depression) Length (ft)	d (ft)	d (ft) (d ≤ h + a)
ULTIMATE CONDITION DRAINAGE AREAS																										
A1.1A		0.22	1.4		1.4	33	P	0.50	1.20%	0.42	0.27	0.50	-	-	-	-	-	-	-	-	-					
A1.1B		0.19	1.2		1.2	33	P	0.50	1.20%	0.42	0.25	0.50	-	-	-	-	-	-	-	-	-					
A1.1	S-1	0.41	2.5		2.5	-	-	-	-	-	-	-	-	-	-	-	-	-	-	-	-		2.5	10	0.19	0.19
B1.1A		0.30	1.9		1.9	33	P	0.50	1.80%	0.42	0.27	0.50	-	-	-	-	-	-	-	-	-					
B1.1B		0.18	1.1		1.1	33	P	0.50	2.55%	0.42	0.22	0.50	-	-	-	-	-	-	-	-	-					
B1.1	S-1	0.48	3.0		3.0	-	-	-	-	-	-	-	-	-	-	-	-	-	-	-	-		3.0	10	0.22	0.22

STREET FLOW AND INLET CALCULATIONS
10 YEAR STORM

Inlet No.	Inlet Type	Drainage Area	Q 10 (cfs)	Q pass (cfs)	Q total (cfs)	STREET CAPACITY: Street Width F-F (ft)	Crown Type	Curb Height (ft)	Gutter Slope (%)	a (ft)	Yo (ft)	Crown Height (ft)	Ponded Width (ft)	INLET ON GRADE CAPACITY: Eo	S'w	Sx	Se	LT	L	E	Qi	Qpass (cfs)	Pass to Inlet #	SUMP INLET CAPACITY: Qtotal (cfs)	CURB (with Depression) Length (ft)	d (ft)	d (ft) (d ≤ h + a)
ULTIMATE CONDITION DRAINAGE AREAS																											
A1.1A		0.22	1.1		1.1	33	P	0.50	1.20%	0.42	0.25	0.50	4.72	-	-	-	-	-	-	-	-	-					
A1.1B		0.19	0.9		0.9	33	P	0.50	1.20%	0.42	0.23	0.50	4.41	-	-	-	-	-	-	-	-	-					
A1.1	S-1	0.41	2.0		2.0	-	-	-	-	-	-	-	-	-	-	-	-	-	-	-	-	-		2.0	10	0.17	0.17
B1.1A		0.30	1.5		1.5	33	P	0.50	1.80%	0.42	0.25	0.50	4.91	-	-	-	-	-	-	-	-	-					
B1.1B		0.18	0.9		0.9	33	P	0.50	2.55%	0.42	0.20	0.50	3.76	-	-	-	-	-	-	-	-	-					
B1.1	S-1	0.48	2.3		2.3	-	-	-	-	-	-	-	-	-	-	-	-	-	-	-	-	-		2.3	10	0.19	0.19

NO. | REVISION | DATE

STATE OF TEXAS
JENNIFER C. FRANKLIN
116838
LICENSED PROFESSIONAL ENGINEER
9-25-24

PAPE-DAWSON ENGINEERS
AUSTIN | SAN ANTONIO | HOUSTON | FORT WORTH | DALLAS
10801 N MOPAC EXPY, BLDG 3, STE 200 | AUSTIN, TX 78759 | 512.454.8711
TBPE FIRM REGISTRATION #470 | TBPLS FIRM REGISTRATION #10028801

RANCHO DEL CIELO - PHASE 4B
WILLIAMSON COUNTY, TEXAS

DRAINAGE AREA CALCULATIONS

CITY JOB No. _____
JOB NO. 51118-61
DATE SEPTEMBER 2024
DESIGNER TS
CHECKED ____ DRAWN CE/JM
SHEET 16 OF 36

Date: Sep 24, 2024, 4:00pm User ID: tstephens
File: H:\Projects\51118-061_Phase 3\501 Construction Documents\Civil\0051118-61.dwg
THIS DOCUMENT HAS BEEN PRODUCED FROM MATERIAL THAT WAS STORED AND/OR TRANSMITTED ELECTRONICALLY AND MAY HAVE BEEN INADVERTENTLY ALTERED. RELY ONLY ON FINAL HARDCOPY MATERIALS BEARING THE CONSULTANT'S ORIGINAL SIGNATURE AND SEAL.

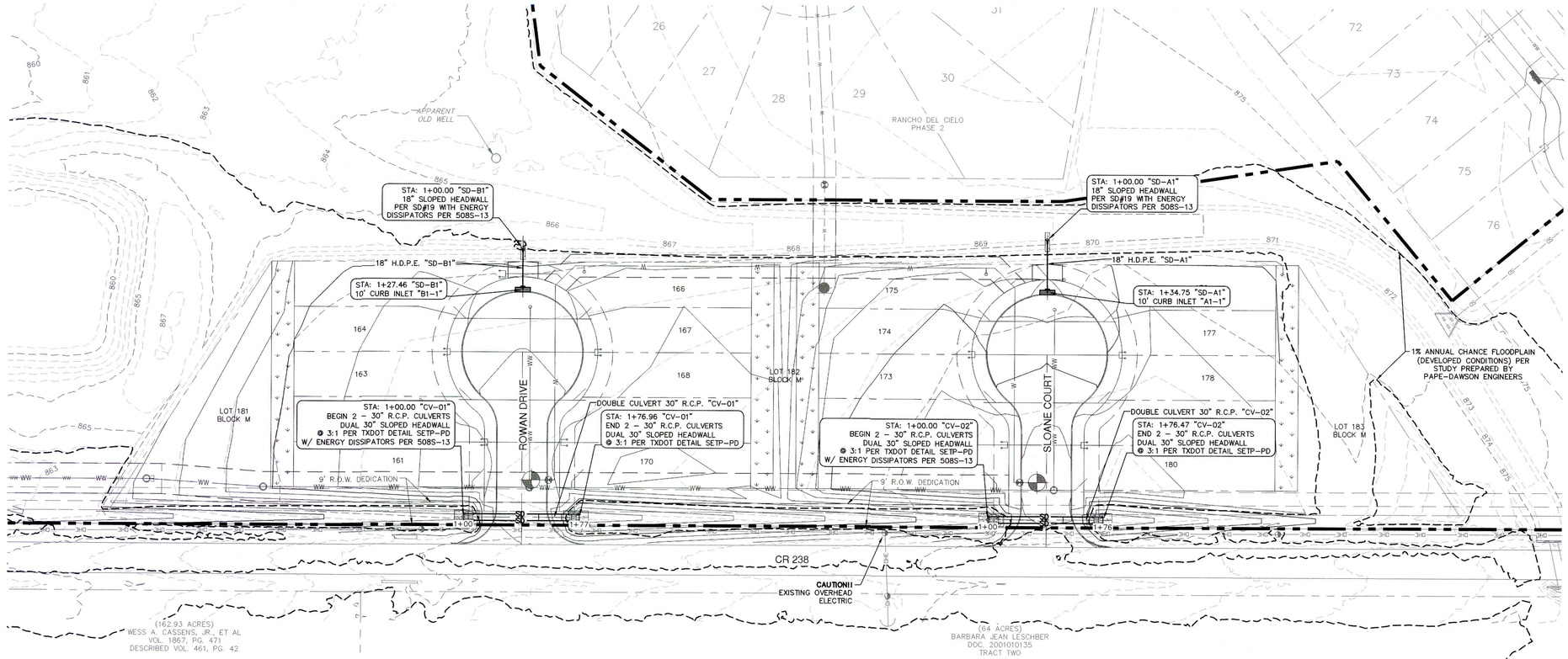

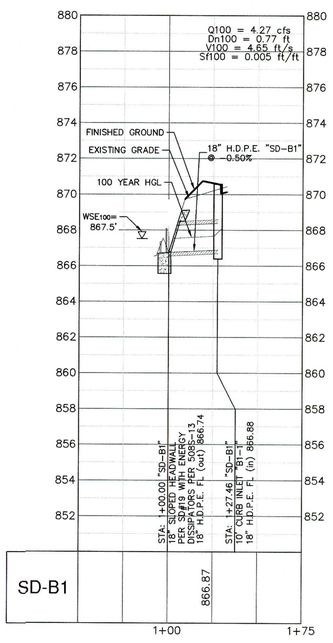

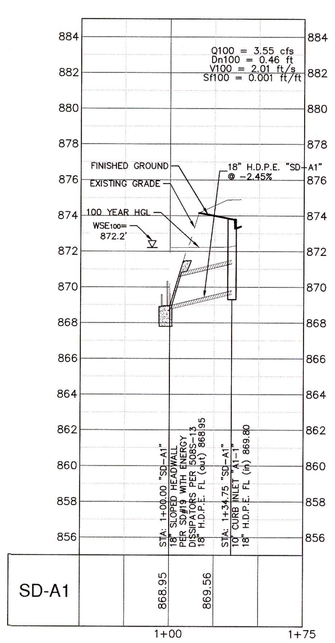

SCALE: 1" = 40'

0' 40' 80' 120'

LEGEND

- WATER LINE
- WASTEWATER LINE & MH
- STORM DRAIN LINE & MH
- CURB INLET
- SINGLE WATER SERVICE
- DOUBLE WATER SERVICE
- SINGLE WW SERVICE
- DOUBLE WW SERVICE
- GATE VALVE
- FIRE HYDRANT
- EXISTING GATE VALVE
- EXISTING FIRE HYDRANT
- EXISTING WATER LINE
- EXISTING WASTEWATER LINE
- EXISTING STORM DRAIN LINE
- EXISTING CONTOUR LINE
- PROPOSED CONTOUR LINE

PROFILE SCALES:

1" = 40' HORIZONTAL
1" = 4' VERTICAL

PROFILE LEGEND:

NATURAL GROUND

FINISHED GRADE

PROPOSED STORM DRAIN

100-YR HGL — 100yr HGL

NO.	REVISION	DATE

STATE OF TEXAS
JENNIFER C. FRANKLIN
116838
LICENSED PROFESSIONAL ENGINEER
9-30-24

PAPE-DAWSON ENGINEERS
AUSTIN | SAN ANTONIO | HOUSTON | FORT WORTH | DALLAS
10801 N. MOPAC EXPY., BLDG. 3, STE. 200 | AUSTIN, TX. 78759 | 512.454.8711
TBPE FIRM REGISTRATION #470 | TBPLS FIRM REGISTRATION #10028801

RANCHO DEL CIELO - PHASE 4B
WILLIAMSON COUNTY, TEXAS

OVERALL STORM DRAIN PLAN

CITY JOB No.
JOB NO. 51118-61
DATE SEPTEMBER 2024
DESIGNER TS
CHECKED DRAWN CE/JM
SHEET 17 OF 36

Date: Sep 30, 2024, 4:19pm User ID: tstephens
File: H:\Projects\51\118\60_Phase 5.3\01 Construction Documents\Civil\SD51118-61.dwg

THIS DOCUMENT HAS BEEN PRODUCED FROM MATERIAL THAT WAS STORED AND/OR TRANSMITTED ELECTRONICALLY AND MAY HAVE BEEN INADVERTENTLY ALTERED. RELY ONLY ON FINAL HARDCOPY MATERIALS BEARING THE CONSULTANT'S ORIGINAL SIGNATURE AND SEAL.

Date: Sep 30, 2024, 3:57pm User ID: tstephens
File: H:\Projects\511\18\60_Phase 5\301 Construction Documents\Civil\CH51118-61.dwg

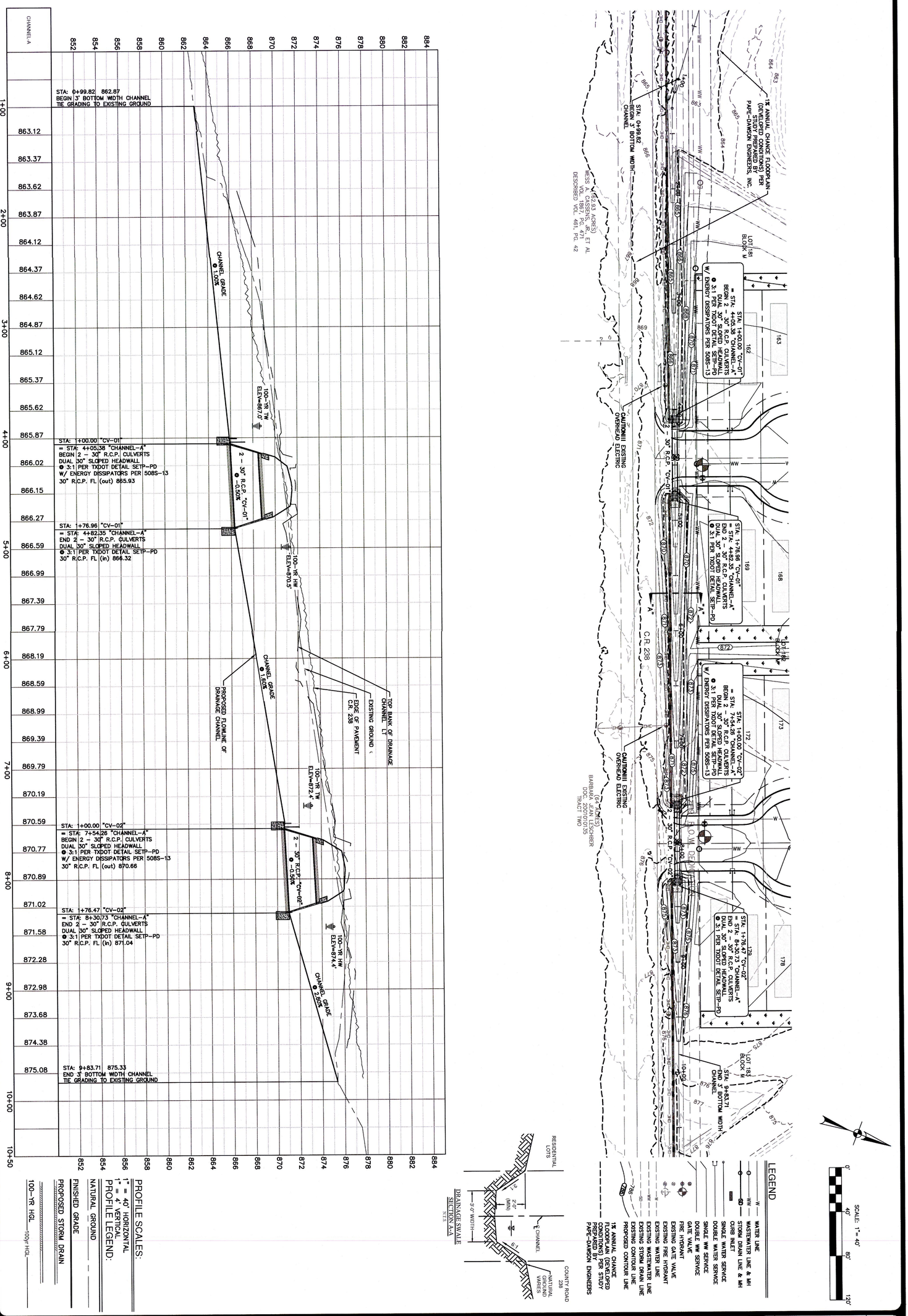

RANCHO DEL CIELO - PHASE 4B
WILLIAMSON COUNTY, TEXAS

CHANNEL A - PLAN AND PROFILE

PAPE-DAWSON ENGINEERS
AUSTIN | SAN ANTONIO | HOUSTON | FORT WORTH | DALLAS
10801 N MOPAC EXPY, BLDG 3, STE 200 | AUSTIN, TX 78759 | 512.454.8711
TBPE FIRM REGISTRATION #470 | TBPLS FIRM REGISTRATION #10028801

JENNIFER C. FRANKLIN 118838 LICENSED PROFESSIONAL ENGINEER STATE OF TEXAS

NO.	REVISION	DATE

CITY JOB No. ____
JOB NO. 51118-61
DATE SEPTEMBER 2024
DESIGNER TS
CHECKED ____ DRAWN CE/JM

SHEET 18 OF 36

Rancho Del Cielo Phase 5 - Water Quality Treatment Summary

EMP Watershed	Total Watershed Area (ac.)	Existing Impervious Cover Pre-Project (ac.)	Existing Impervious Cover Phases 1+2+3+4 (ac.)	Proposed Impervious Cover Phase 5 (ac.)	Total Impervious Cover Phases 1+2+3+4+5 (ac.)	EMP	Phase 5 TSS Removal Required (lb.)	Phase 5 TSS Removal Provided (lb.)	Total TSS Removal Required (lb.)	Total TSS Removal Provided (lb.)
Existing Batch Detention Pond '1'	99.54*	0.00	50.06	0.00	50.06	Existing Batch Detention Pond '1'	0	0	43,572	46,053
Overtreatment provided by Batch Detention Pond '1'	5.52	0.00	2.85	0.00	2.85	Overtreatment provided by Batch Detention Pond '1'	0	-	2,481	-
Existing Batch Detention Pond '2A'	13.11	0.00	6.08	0.00	6.08	Existing Batch Detention Pond '2A'	0	0	5,292	6,223
Overtreatment provided by Batch Detention Pond '2A'	1.55	0.00	1.07	0.00	1.07	Overtreatment provided by Batch Detention Pond '2A'	0	-	931	-
Existing Batch Detention Pond '2B'	32.72**	0.00	14.31	0.00	14.31	Existing Batch Detention Pond '2B'	0	566	12,455	13,560
Overtreatment provided by Batch Detention Pond '2B'	2.36	0.00	0.62	0.65	1.27	Overtreatment provided by Batch Detention Pond '2B'	566	-	1,105	-
Existing 15' Engineered VFS '1'	2.49	0.00	1.31	0.00	1.31	Existing 15' Engineered VFS '1'	0	0	1,140	1,245
Existing 15' Engineered VFS '2'	2.16	0.00	1.07	0.00	1.07	Existing 15' Engineered VFS '2'	0	0	931	975
Existing 15' Engineered VFS '3'	0.42	0.00	0.19	0.00	0.19	Existing 15' Engineered VFS '3'	0	0	165	165
Existing 15' Engineered VFS '4'	0.54	0.00	0.17	0.00	0.17	Existing 15' Engineered VFS '4'	0	0	148	148
Existing 15' Engineered VFS '5'	0.66	0.00	0.28	0.00	0.28	Existing 15' Engineered VFS '5'	0	0	244	244
Existing 15' Engineered VFS '6'	0.91	0.00	0.48	0.00	0.48	Existing 15' Engineered VFS '6'	0	0	418	418
Existing 15' Engineered VFS '8'	1.32	0.00	0.63	0.00	0.63	Existing 15' Engineered VFS '8'	0	0	548	548
Existing 15' Engineered VFS '9'	0.65	0.00	0.39	0.00	0.39	Existing 15' Engineered VFS '9'	0	0	339	339
Existing 15' Engineered VFS '10'	1.44	0.00	0.82	0.00	0.82	Existing 15' Engineered VFS '10'	0	0	714	714
Proposed 15' Engineered VFS '11'	0.28	0.00	0.00	0.10	0.10	Proposed 15' Engineered VFS '11'	87	87	87	87
Proposed 15' Engineered VFS '12'	0.16	0.00	0.00	0.06	0.06	Proposed 15' Engineered VFS '12'	52	52	52	52
Proposed 15' Engineered VFS '13'	0.27	0.00	0.00	0.10	0.10	Proposed 15' Engineered VFS '13'	87	87	87	87
Proposed 15' Engineered VFS '14'	0.18	0.00	0.00	0.07	0.07	Proposed 15' Engineered VFS '14'	61	61	61	61
Overtreatment provided by VFS	0.36	0.00	0.17	0.00	0.17	Overtreatment provided by VFS	-	-	148	-
Uncaptured Area (treatment not required)	24.57	0.00	0.00	0.00	0.00	N/A	0	0	0	0
TOTAL	**189.77**	**0.00**	**79.68**	**0.98**	**80.66**		**853**	**853**	**70206**	**70206**

*Total watershed area of Batch Detention Pond '1' equals 97.05 acres plus 2.49 acres from VFS '1'

**Total watershed area of Batch Detention Pond '2B' equals 31.34 acres plus 0.91 acres from VFS '6' and 0.47 acres from off-site

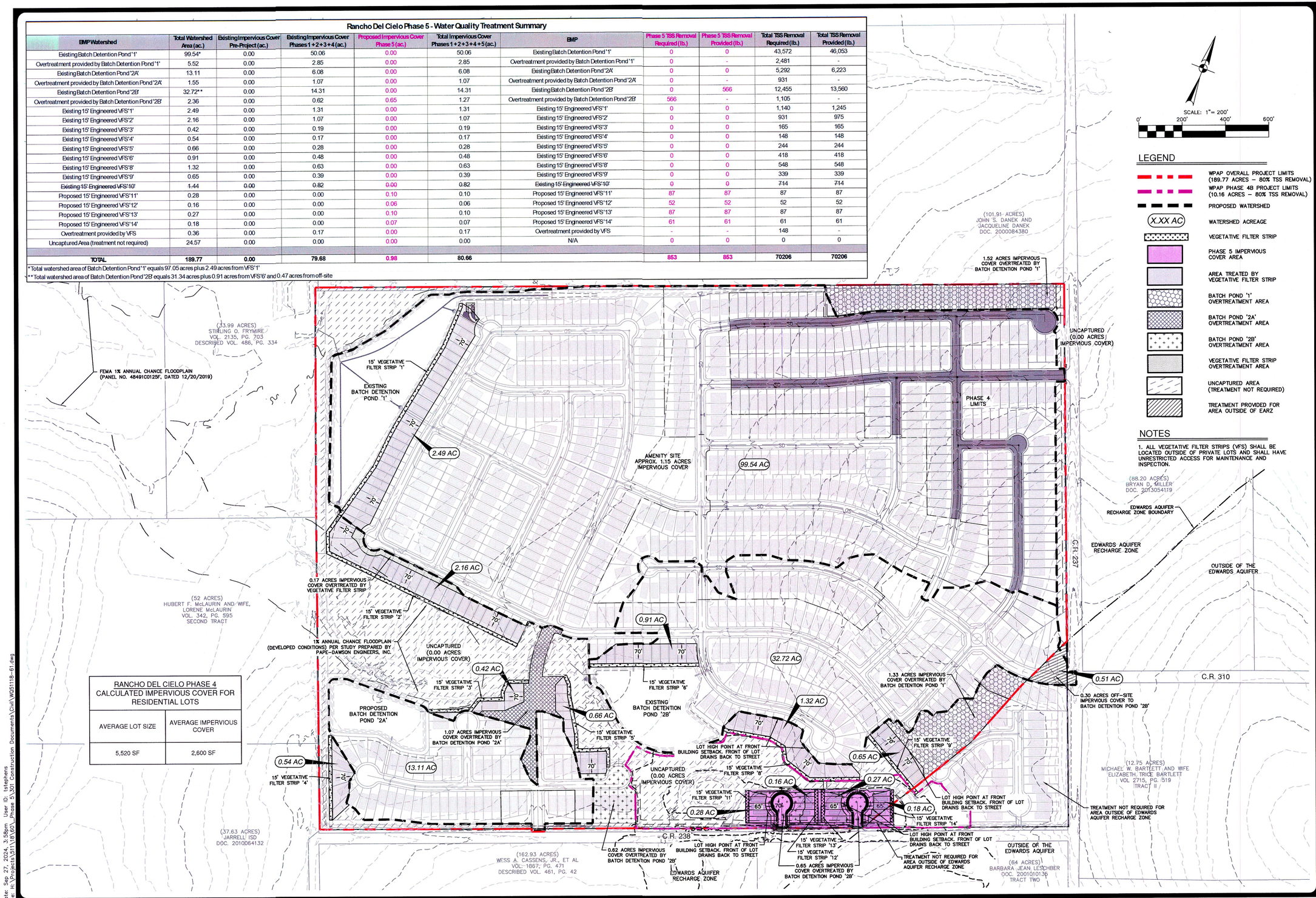

RANCHO DEL CIELO PHASE 4
CALCULATED IMPERVIOUS COVER FOR RESIDENTIAL LOTS

AVERAGE LOT SIZE	AVERAGE IMPERVIOUS COVER
5,520 SF	2,600 SF

LEGEND

- WPAP OVERALL PROJECT LIMITS (189.77 ACRES – 80% TSS REMOVAL)
- WPAP PHASE 4B PROJECT LIMITS (10.16 ACRES – 80% TSS REMOVAL)
- PROPOSED WATERSHED
- X.XX AC — WATERSHED ACREAGE
- VEGETATIVE FILTER STRIP
- PHASE 5 IMPERVIOUS COVER AREA
- AREA TREATED BY VEGETATIVE FILTER STRIP
- BATCH POND '1' OVERTREATMENT AREA
- BATCH POND '2A' OVERTREATMENT AREA
- BATCH POND '2B' OVERTREATMENT AREA
- VEGETATIVE FILTER STRIP OVERTREATMENT AREA
- UNCAPTURED AREA (TREATMENT NOT REQUIRED)
- TREATMENT PROVIDED FOR AREA OUTSIDE OF EARZ

NOTES

1. ALL VEGETATIVE FILTER STRIPS (VFS) SHALL BE LOCATED OUTSIDE OF PRIVATE LOTS AND SHALL HAVE UNRESTRICTED ACCESS FOR MAINTENANCE AND INSPECTION.

NO.	REVISION	DATE

STATE OF TEXAS
JENNIFER C. FRANKLIN
118838
LICENSED
PROFESSIONAL ENGINEER
9-30-24

PAPE-DAWSON ENGINEERS
AUSTIN | SAN ANTONIO | HOUSTON | FORT WORTH | DALLAS
10801 N MOPAC EXPY, BLDG 3, STE 200 | AUSTIN, TX 78759 | 512.454.8711
TBPE FIRM REGISTRATION #470 | TBPLS FIRM REGISTRATION #10028801

RANCHO DEL CIELO - PHASE 4B
WILLIAMSON COUNTY, TEXAS
WATER QUALITY TREATMENT SUMMARY - PHASE 5 - 1 OF 2

CITY JOB No. _____
JOB NO. 51118-61
DATE SEPTEMBER 2024
DESIGNER TS
CHECKED _____ DRAWN CE/JM
SHEET 19 OF 36

Date: Sep 27, 2024, 3:58pm User ID: tstephens
File: H:\Projects\51118\60_Phase 5\301 Construction Documents\Civil\W051118-61.dwg

THIS DOCUMENT HAS BEEN PRODUCED FROM MATERIAL THAT WAS STORED AND/OR TRANSMITTED ELECTRONICALLY AND MAY HAVE BEEN INADVERTENTLY ALTERED. RELY ONLY ON FINAL HARDCOPY MATERIALS BEARING THE CONSULTANT'S ORIGINAL SIGNATURE AND SEAL.

TSS REMOVAL CALCULATIONS
VFS '11'

Texas Commission on Environmental Quality

TSS Removal Calculations 04-20-2009

Project Name: Rancho Del Cielo Phase 2 Modification
Date Prepared: 8/28/2024

Additional information is provided for cells with a red triangle in the upper right corner. Place the cursor over the cell.
Text shown in blue indicate location of instructions in the Technical Guidance Manual - RG-348.
Characters shown in red are data entry fields.
Characters shown in black (Bold) are calculated fields. Changes to these fields will remove the equations used in the spreadsheet.

1. The Required Load Reduction for the total project: Calculations from RG-348 Pages 3-27 to 3-30

Page 3-29 Equation 3.3: $L_M = 27.2(A_N \times P)$

where:
$L_{M\ TOTAL\ PROJECT}$ = Required TSS removal resulting from the proposed development = 80% of increased load
A_N = Net increase in impervious area for the project
P = Average annual precipitation, inches

Site Data: Determine Required Load Removal Based on the Entire Project

County =	Williamson	
Total project area included in plan * =	189.77	acres
Predevelopment impervious area within the limits of the plan * =	0.00	acres
Total post-development impervious area within the limits of the plan* =	80.66	acres
Total post-development impervious cover fraction * =	0.43	
P =	32	inches
$L_{M\ TOTAL\ PROJECT}$ =	70206	lbs.

* The values entered in these fields should be for the total project area.

Number of drainage basins / outfalls areas leaving the plan area = 3

2. Drainage Basin Parameters (This information should be provided for each basin):

Drainage Basin/Outfall Area No. = VFS '11'

Total drainage basin/outfall area =	0.28	acres
Predevelopment impervious area within drainage basin/outfall area =	0.00	acres
Post-development impervious area within drainage basin/outfall area =	0.10	acres
Post-development impervious fraction within drainage basin/outfall area =	0.36	
$L_{M\ THIS\ BASIN}$ =	97	lbs.

3. Indicate the proposed BMP Code for this basin.

Proposed BMP = **Vegetated Filter Strips**
Removal efficiency = 85 percent

Aqualogic Cartridge Filter
Bioretention
Contech StormFilter
Constructed Wetland
Extended Detention
Grassy Swale
Retention / Irrigation
Sand Filter
Stormceptor
Vegetated Filter Strips
Vortechs
Wet Basin
Wet Vault

4. Calculate Maximum TSS Load Removed (L_R) for this Drainage Basin by the selected BMP Type.

RG-348 Page 3-33 Equation 3.7: L_R = (BMP efficiency) x P x (A_I x 34.6 + A_P x 0.54)

where:
A_C = Total On-Site drainage area in the BMP catchment area
A_I = Impervious area proposed in the BMP catchment area
A_P = Pervious area remaining in the BMP catchment area
L_R = TSS Load removed from this catchment area by the proposed BMP

A_C =	0.28	acres
A_I =	0.10	acres
A_P =	0.18	acres
L_R =	97	lbs

5. Calculate Fraction of Annual Runoff to Treat the drainage basin / outfall area

Desired $L_{M\ THIS\ BASIN}$ = 97 lbs.

F = 0.90

TSS REMOVAL CALCULATIONS
VFS '12'

Texas Commission on Environmental Quality

TSS Removal Calculations 04-20-2009

Project Name: Rancho Del Cielo Phase 2 Modification
Date Prepared: 8/28/2024

Additional information is provided for cells with a red triangle in the upper right corner. Place the cursor over the cell.
Text shown in blue indicate location of instructions in the Technical Guidance Manual - RG-348.
Characters shown in red are data entry fields.
Characters shown in black (Bold) are calculated fields. Changes to these fields will remove the equations used in the spreadsheet.

1. The Required Load Reduction for the total project: Calculations from RG-348 Pages 3-27 to 3-30

Page 3-29 Equation 3.3: $L_M = 27.2(A_N \times P)$

where:
$L_{M\ TOTAL\ PROJECT}$ = Required TSS removal resulting from the proposed development = 80% of increased load
A_N = Net increase in impervious area for the project
P = Average annual precipitation, inches

Site Data: Determine Required Load Removal Based on the Entire Project

County =	Williamson	
Total project area included in plan * =	189.77	acres
Predevelopment impervious area within the limits of the plan * =	0.00	acres
Total post-development impervious area within the limits of the plan* =	80.66	acres
Total post-development impervious cover fraction * =	0.43	
P =	32	inches
$L_{M\ TOTAL\ PROJECT}$ =	70206	lbs.

* The values entered in these fields should be for the total project area.

Number of drainage basins / outfalls areas leaving the plan area = 3

2. Drainage Basin Parameters (This information should be provided for each basin):

Drainage Basin/Outfall Area No. = VFS '12'

Total drainage basin/outfall area =	0.16	acres
Predevelopment impervious area within drainage basin/outfall area =	0.00	acres
Post-development impervious area within drainage basin/outfall area =	0.06	acres
Post-development impervious fraction within drainage basin/outfall area =	0.38	
$L_{M\ THIS\ BASIN}$ =	52	lbs.

3. Indicate the proposed BMP Code for this basin.

Proposed BMP = **Vegetated Filter Strips**
Removal efficiency = 85 percent

Aqualogic Cartridge Filter
Bioretention
Contech StormFilter
Constructed Wetland
Extended Detention
Grassy Swale
Retention / Irrigation
Sand Filter
Stormceptor
Vegetated Filter Strips
Vortechs
Wet Basin
Wet Vault

4. Calculate Maximum TSS Load Removed (L_R) for this Drainage Basin by the selected BMP Type.

RG-348 Page 3-33 Equation 3.7: L_R = (BMP efficiency) x P x (A_I x 34.6 + A_P x 0.54)

where:
A_C = Total On-Site drainage area in the BMP catchment area
A_I = Impervious area proposed in the BMP catchment area
A_P = Pervious area remaining in the BMP catchment area
L_R = TSS Load removed from this catchment area by the proposed BMP

A_C =	0.16	acres
A_I =	0.06	acres
A_P =	0.10	acres
L_R =	58	lbs

5. Calculate Fraction of Annual Runoff to Treat the drainage basin / outfall area

Desired $L_{M\ THIS\ BASIN}$ = 52 lbs.

F = 0.90

TSS REMOVAL CALCULATIONS
VFS '13'

Texas Commission on Environmental Quality

TSS Removal Calculations 04-20-2009

Project Name: Rancho Del Cielo Phase 2 Modification
Date Prepared: 8/28/2024

Additional information is provided for cells with a red triangle in the upper right corner. Place the cursor over the cell.
Text shown in blue indicate location of instructions in the Technical Guidance Manual - RG-348.
Characters shown in red are data entry fields.
Characters shown in black (Bold) are calculated fields. Changes to these fields will remove the equations used in the spreadsheet.

1. The Required Load Reduction for the total project: Calculations from RG-348 Pages 3-27 to 3-30

Page 3-29 Equation 3.3: $L_M = 27.2(A_N \times P)$

where:
$L_{M\ TOTAL\ PROJECT}$ = Required TSS removal resulting from the proposed development = 80% of increased load
A_N = Net increase in impervious area for the project
P = Average annual precipitation, inches

Site Data: Determine Required Load Removal Based on the Entire Project

County =	Williamson	
Total project area included in plan * =	189.77	acres
Predevelopment impervious area within the limits of the plan * =	0.00	acres
Total post-development impervious area within the limits of the plan* =	80.66	acres
Total post-development impervious cover fraction * =	0.43	
P =	32	inches
$L_{M\ TOTAL\ PROJECT}$ =	70206	lbs.

* The values entered in these fields should be for the total project area.

Number of drainage basins / outfalls areas leaving the plan area = 3

2. Drainage Basin Parameters (This information should be provided for each basin):

Drainage Basin/Outfall Area No. = VFS '13'

Total drainage basin/outfall area =	0.27	acres
Predevelopment impervious area within drainage basin/outfall area =	0.00	acres
Post-development impervious area within drainage basin/outfall area =	0.10	acres
Post-development impervious fraction within drainage basin/outfall area =	0.37	
$L_{M\ THIS\ BASIN}$ =	97	lbs.

3. Indicate the proposed BMP Code for this basin.

Proposed BMP = **Vegetated Filter Strips**
Removal efficiency = 85 percent

Aqualogic Cartridge Filter
Bioretention
Contech StormFilter
Constructed Wetland
Extended Detention
Grassy Swale
Retention / Irrigation
Sand Filter
Stormceptor
Vegetated Filter Strips
Vortechs
Wet Basin
Wet Vault

4. Calculate Maximum TSS Load Removed (L_R) for this Drainage Basin by the selected BMP Type.

RG-348 Page 3-33 Equation 3.7: L_R = (BMP efficiency) x P x (A_I x 34.6 + A_P x 0.54)

where:
A_C = Total On-Site drainage area in the BMP catchment area
A_I = Impervious area proposed in the BMP catchment area
A_P = Pervious area remaining in the BMP catchment area
L_R = TSS Load removed from this catchment area by the proposed BMP

A_C =	0.27	acres
A_I =	0.10	acres
A_P =	0.17	acres
L_R =	97	lbs

5. Calculate Fraction of Annual Runoff to Treat the drainage basin / outfall area

Desired $L_{M\ THIS\ BASIN}$ = 87 lbs.

F = 0.90

TSS REMOVAL CALCULATIONS
VFS '14'

Texas Commission on Environmental Quality

TSS Removal Calculations 04-20-2009

Project Name: Rancho Del Cielo Phase 2 Modification
Date Prepared: 8/28/2024

Additional information is provided for cells with a red triangle in the upper right corner. Place the cursor over the cell.
Text shown in blue indicate location of instructions in the Technical Guidance Manual - RG-348.
Characters shown in red are data entry fields.
Characters shown in black (Bold) are calculated fields. Changes to these fields will remove the equations used in the spreadsheet.

1. The Required Load Reduction for the total project: Calculations from RG-348 Pages 3-27 to 3-30

Page 3-29 Equation 3.3: $L_M = 27.2(A_N \times P)$

where:
$L_{M\ TOTAL\ PROJECT}$ = Required TSS removal resulting from the proposed development = 80% of increased load
A_N = Net increase in impervious area for the project
P = Average annual precipitation, inches

Site Data: Determine Required Load Removal Based on the Entire Project

County =	Williamson	
Total project area included in plan * =	189.77	acres
Predevelopment impervious area within the limits of the plan * =	0.00	acres
Total post-development impervious area within the limits of the plan* =	80.66	acres
Total post-development impervious cover fraction * =	0.43	
P =	32	inches
$L_{M\ TOTAL\ PROJECT}$ =	70206	lbs.

* The values entered in these fields should be for the total project area.

Number of drainage basins / outfalls areas leaving the plan area = 3

2. Drainage Basin Parameters (This information should be provided for each basin):

Drainage Basin/Outfall Area No. = VFS '14'

Total drainage basin/outfall area =	0.18	acres
Predevelopment impervious area within drainage basin/outfall area =	0.00	acres
Post-development impervious area within drainage basin/outfall area =	0.07	acres
Post-development impervious fraction within drainage basin/outfall area =	0.39	
$L_{M\ THIS\ BASIN}$ =	61	lbs.

3. Indicate the proposed BMP Code for this basin.

Proposed BMP = **Vegetated Filter Strips**
Removal efficiency = 85 percent

Aqualogic Cartridge Filter
Bioretention
Contech StormFilter
Constructed Wetland
Extended Detention
Grassy Swale
Retention / Irrigation
Sand Filter
Stormceptor
Vegetated Filter Strips
Vortechs
Wet Basin
Wet Vault

4. Calculate Maximum TSS Load Removed (L_R) for this Drainage Basin by the selected BMP Type.

RG-348 Page 3-33 Equation 3.7: L_R = (BMP efficiency) x P x (A_I x 34.6 + A_P x 0.54)

where:
A_C = Total On-Site drainage area in the BMP catchment area
A_I = Impervious area proposed in the BMP catchment area
A_P = Pervious area remaining in the BMP catchment area
L_R = TSS Load removed from this catchment area by the proposed BMP

A_C =	0.18	acres
A_I =	0.07	acres
A_P =	0.11	acres
L_R =	67	lbs

5. Calculate Fraction of Annual Runoff to Treat the drainage basin / outfall area

Desired $L_{M\ THIS\ BASIN}$ = 61 lbs.

F = 0.90

TSS REMOVAL CALCULATIONS
EXISTING BATCH DETENTION POND '2B'

Texas Commission on Environmental Quality

TSS Removal Calculations 04-20-2009

Project Name: Rancho Del Cielo Phase 2 Modification
Date Prepared: 8/28/2024

Additional information is provided for cells with a red triangle in the upper right corner. Place the cursor over the cell.
Text shown in blue indicate location of instructions in the Technical Guidance Manual - RG-348.
Characters shown in red are data entry fields.
Characters shown in black (Bold) are calculated fields. Changes to these fields will remove the equations used in the spreadsheet.

1. The Required Load Reduction for the total project: Calculations from RG-348 Pages 3-27 to 3-30

Page 3-29 Equation 3.3: $L_M = 27.2(A_N \times P)$

where:
$L_{M\ TOTAL\ PROJECT}$ = Required TSS removal resulting from the proposed development = 80% of increased load
A_N = Net increase in impervious area for the project
P = Average annual precipitation, inches

Site Data: Determine Required Load Removal Based on the Entire Project

County =	Williamson	
Total project area included in plan * =	189.77	acres
Predevelopment impervious area within the limits of the plan * =	0.00	acres
Total post-development impervious area within the limits of the plan* =	80.66	acres
Total post-development impervious cover fraction * =	0.43	
P =	32	inches
$L_{M\ TOTAL\ PROJECT}$ =	70206	lbs.

* The values entered in these fields should be for the total project area.

Number of drainage basins / outfalls areas leaving the plan area = 3

2. Drainage Basin Parameters (This information should be provided for each basin):

Drainage Basin/Outfall Area No. = 2B

Total drainage basin/outfall area =	32.72	acres
Predevelopment impervious area within drainage basin/outfall area =	0.00	acres
Post-development impervious area within drainage basin/outfall area =	14.31	acres
Post-development impervious fraction within drainage basin/outfall area =	0.44	
$L_{M\ THIS\ BASIN}$ =	12455	lbs.

***Impervious cover required for treatment excludes 0.30 acres of impervious cover within basin catchment area and outside of the EARZ**

3. Indicate the proposed BMP Code for this basin.

Proposed BMP = **Extended Detention** **Batch Detention**
Removal efficiency = 91 percent

Aqualogic Cartridge Filter
Bioretention
Contech StormFilter
Constructed Wetland
Extended Detention
Grassy Swale
Retention / Irrigation
Sand Filter
Stormceptor
Vegetated Filter Strips
Vortechs
Wet Basin
Wet Vault

4. Calculate Maximum TSS Load Removed (L_R) for this Drainage Basin by the selected BMP Type.

RG-348 Page 3-33 Equation 3.7: L_R = (BMP efficiency) x P x (A_I x 34.6 + A_P x 0.54)

where:
A_C = Total On-Site drainage area in the BMP catchment area
A_I = Impervious area proposed in the BMP catchment area
A_P = Pervious area remaining in the BMP catchment area
L_R = TSS Load removed from this catchment area by the proposed BMP

A_C =	32.72	acres	
A_I =	14.61	acres	***A_I includes 0.30 acres of impervious cover within basin**
A_P =	18.11	acres	**catchment area and outside of the EARZ for treatment**
L_R =	15005	lbs	

5. Calculate Fraction of Annual Runoff to Treat the drainage basin / outfall area

Desired $L_{M\ THIS\ BASIN}$ = 13560 lbs. **Overtreatment for 1.27 acres impervious cover = 12,455 + (27.2*1.27*32) = 13,560**

F = 0.90

6. Calculate Capture Volume required by the BMP Type for this drainage basin / outfall area. Calculations from RG-348 Pages 3-34 to 3-36

Rainfall Depth =	1.70	inches
Post Development Runoff Coefficient =	0.33	
On-site Water Quality Volume =	66544	cubic feet

Calculations from RG-348 Pages 3-36 to 3-37

Off-site area draining to BMP =	0.00	acres
Off-site Impervious cover draining to BMP =	0.00	acres
Impervious fraction of off-site area =	0	
Off-site Runoff Coefficient =	0.00	
Off-site Water Quality Volume =	0	cubic feet
Storage for Sediment =	13309	
Total Capture Volume (required water quality volume(s) x 1.20) =	79853	cubic feet

NOTE: POND '2B' WATER QUALITY VOLUME PROVIDED = 82,727 CUBIC FEET. REFERENCE RANCHO DEL CIELO PHASE 1 CONSTRUCTION PLANS BY PAPE-DAWSON ENGINEERS, INC. DATED 1/25/21 FOR POND DETAILS.

NO.	REVISION	DATE

STATE OF TEXAS
JENNIFER C. FRANKLIN
118838
LICENSED
PROFESSIONAL ENGINEER
9-25-24

PAPE-DAWSON ENGINEERS
AUSTIN | SAN ANTONIO | HOUSTON | FORT WORTH | DALLAS
10801 N MOPAC EXPY, BLDG 3, STE 200 | AUSTIN, TX 78759 | 512.454.8711
TBPE FIRM REGISTRATION #470 | TBPLS FIRM REGISTRATION #10028801

RANCHO DEL CIELO - PHASE 4B
WILLIAMSON COUNTY, TEXAS
WATER QUALITY TREATMENT SUMMARY - PHASE 5 - 2 OF 2

CITY JOB No. _____
JOB NO. 51118-61
DATE SEPTEMBER 2024
DESIGNER TS
CHECKED _____ DRAWN CE/JM
SHEET 20 OF 36

Date: Sep 24, 2024, 4:03pm User ID: tstephens
File: H:\Projects\51\18\60_Phase 5\301 Construction Documents\Civil\WD51118-61.dwg

THIS DOCUMENT WAS BEEN PRODUCED FROM MATERIAL THAT WAS STORED AND/OR TRANSMITTED ELECTRONICALLY AND MAY HAVE BEEN INADVERTENTLY ALTERED. RELY ONLY ON FINAL HARDCOPY MATERIALS BEARING THE CONSULTANT'S ORIGINAL SIGNATURE AND SEAL.

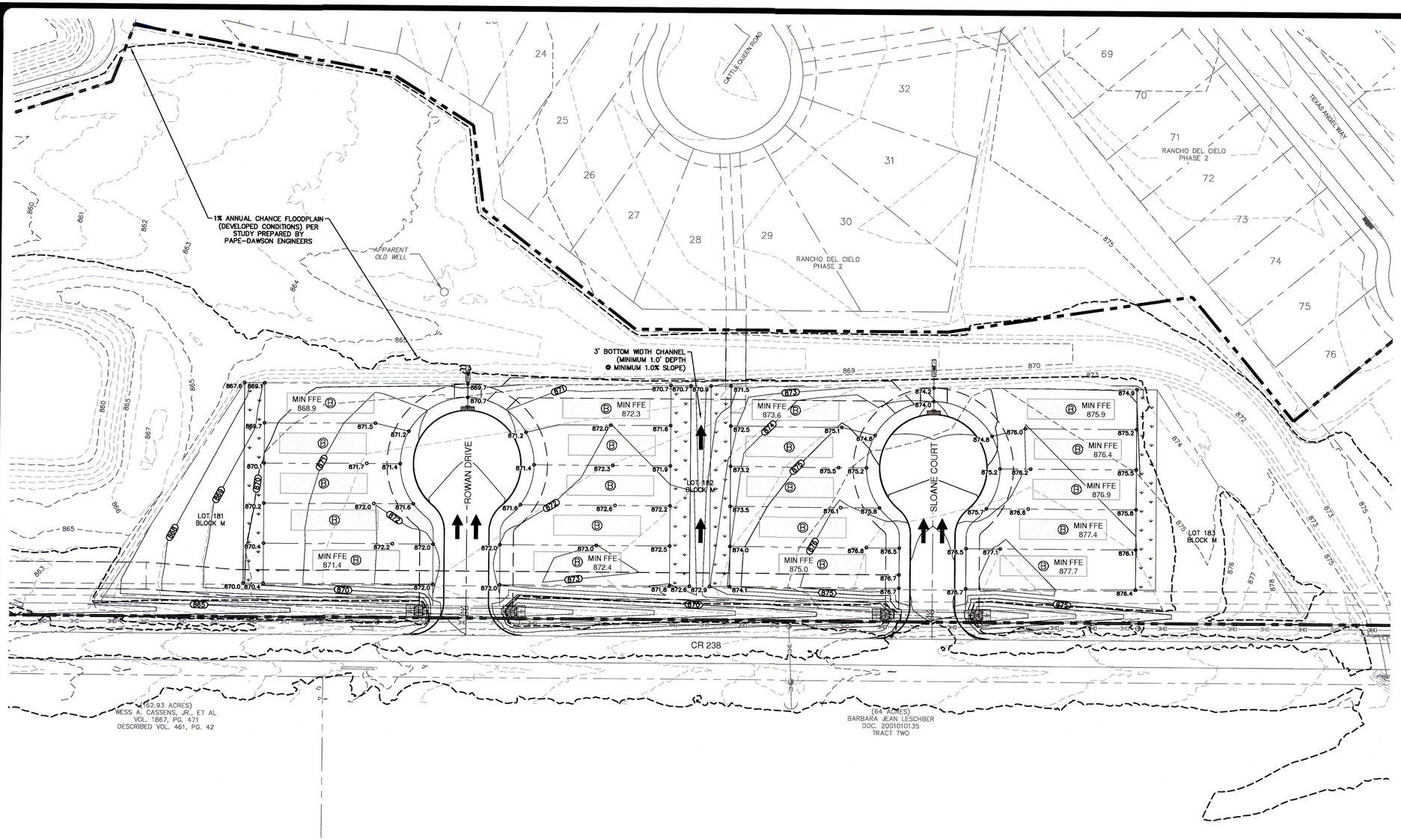

SCALE: 1" = 40'

0' 40' 80' 120'

LEGEND

- PROPOSED CONTOUR LINE
- EXISTING CONTOUR LINE
- CONTRACTOR TO GRADE SWALE ALONG LOT LINE
- EG XXX.X — EXISTING GRADE SPOT ELEVATION
- XXX.X — FINISHED GRADE SPOT ELEVATION
- (A) TYPE 'A' LOT GRADING PER FHA-HUD REQUIREMENTS
- (B) TYPE 'B' LOT GRADING PER FHA-HUD REQUIREMENTS
- (C) TYPE 'C' LOT GRADING PER FHA-HUD REQUIREMENTS
- DIRECTION OF FLOW
- 1% ANNUAL CHANCE FLOODPLAIN (DEVELOPED CONDITIONS) PER STUDY PREPARED BY PAPE-DAWSON ENGINEERS.

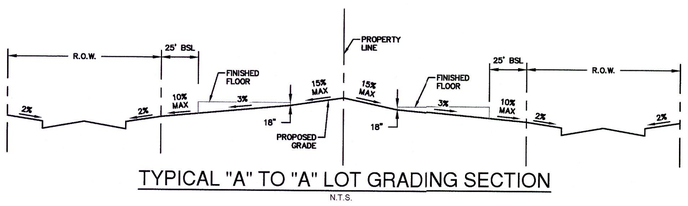

TYPICAL "A" TO "A" LOT GRADING SECTION

N.T.S.

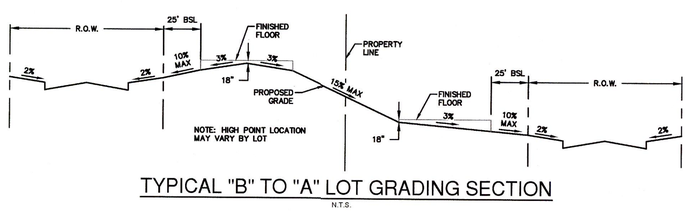

TYPICAL "B" TO "A" LOT GRADING SECTION

N.T.S.

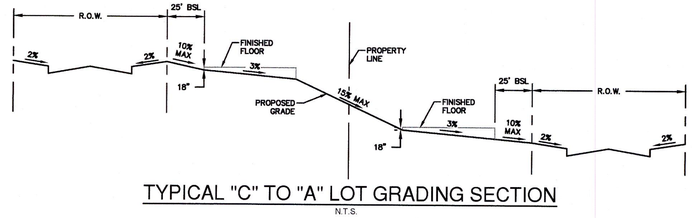

TYPICAL "C" TO "A" LOT GRADING SECTION

N.T.S.

NO.	REVISION	DATE

STATE OF TEXAS
JENNIFER C. FRANKLIN
118838
LICENSED PROFESSIONAL ENGINEER
9-30-24

PAPE-DAWSON ENGINEERS
AUSTIN | SAN ANTONIO | HOUSTON | FORT WORTH | DALLAS
10801 N MOPAC EXPY, BLDG 3, STE 200 | AUSTIN, TX 78759 | 512.454.8711
TBPE FIRM REGISTRATION #470 | TBPLS FIRM REGISTRATION #10028801

RANCHO DEL CIELO - PHASE 4B
WILLIAMSON COUNTY, TEXAS

OVERALL GRADING PLAN

CITY JOB No.
JOB NO. 51118-61
DATE SEPTEMBER 2024
DESIGNER TS
CHECKED DRAWN CE/JM
SHEET 21 OF 36

Date: Sep 30, 2024, 3:57pm User ID: tstephens
File: H:\Projects\511\18\60_Phase 5\301 Construction Documents\Civil\GR51118-61.dwg

THIS DOCUMENT WAS PRODUCED FROM MATERIAL THAT WAS STORED AND/OR TRANSMITTED ELECTRONICALLY AND MAY HAVE BEEN INADVERTENTLY ALTERED. RELY ONLY ON FINAL HARDCOPY MATERIALS BEARING THE CONSULTANT'S ORIGINAL SIGNATURE AND SEAL.

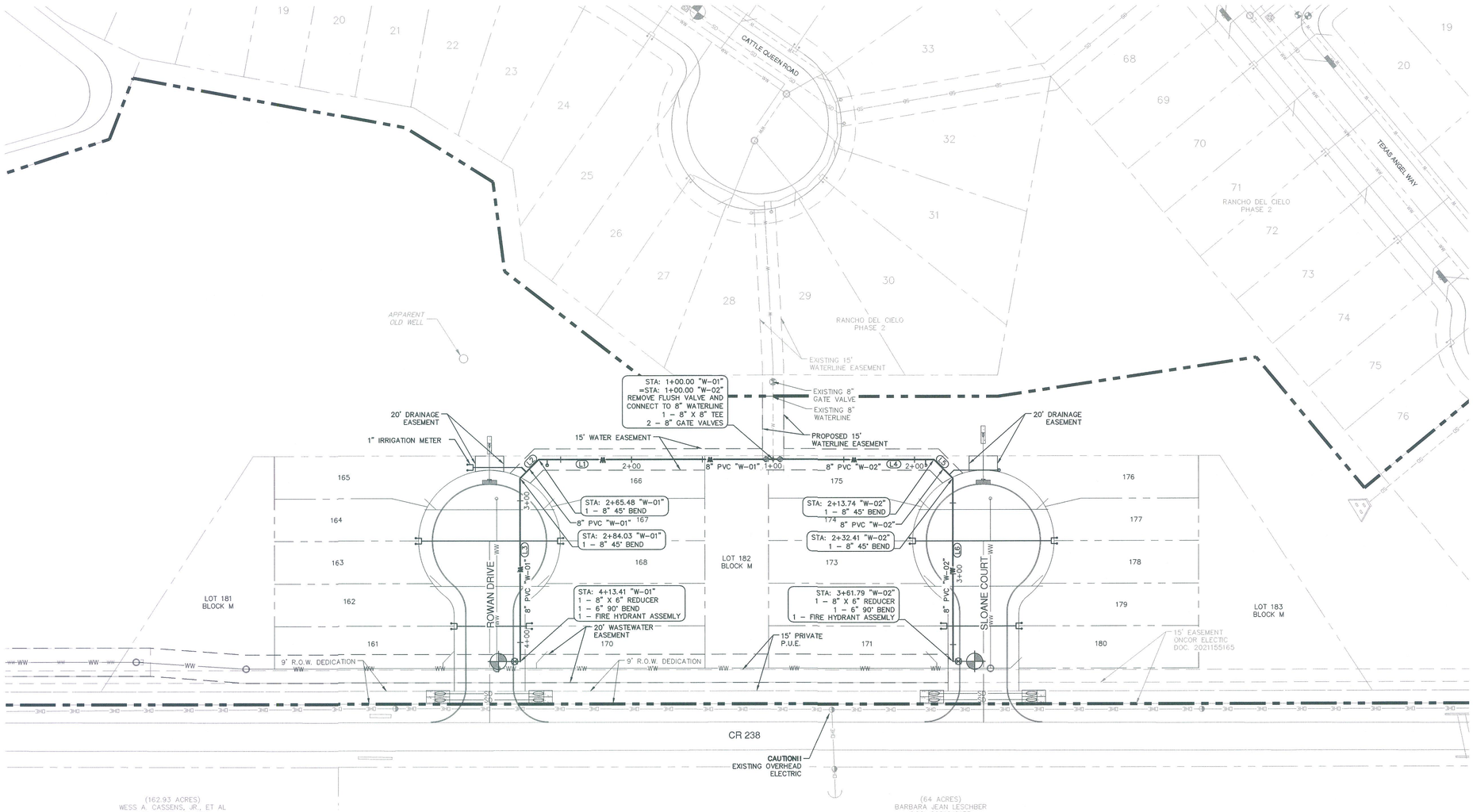

SCALE: 1"= 40'

0' 40' 80' 120'

LEGEND

- WATER LINE
- WASTEWATER LINE & MH
- STORM DRAIN LINE & MH
- CURB INLET
- SINGLE WATER SERVICE
- DOUBLE WATER SERVICE
- SINGLE WW SERVICE
- DOUBLE WW SERVICE
- GATE VALVE
- FIRE HYDRANT
- EXISTING GATE VALVE
- EXISTING FIRE HYDRANT
- EXISTING WATER LINE
- EXISTING WASTEWATER LINE
- EXISTING STORM DRAIN LINE
- 2 – 4" IRRIGATION SLEEVES

NOTES

1. ALL WATER SERVICE LINE TAPS TO BE LOCATED AT A MINIMUM 3' OUTSIDE THE BACK OF CURB TO ALLOW SERVICE LINE SLEEVES BENEATH THE PAVEMENT PER DETAIL G-01.
2. THERE SHALL BE A MINIMUM 1' CLEARANCE FROM BACK OF CURB INLETS TO OUTSIDE EDGE OF WATERLINE.
3. IRRIGATION METERS TO INCLUDE BACKFLOW PREVENTION ASSEMBLIES.

LINE TABLE		
LINE #	LENGTH	BEARING
L1	165.48'	S68°47'20"W
L2	18.55'	S23°46'53"W
L3	129.38'	S21°12'42"E
L4	113.74'	N68°47'20"E
L5	18.67'	S66°34'26"E
L6	129.38'	S21°12'42"E

NO.	REVISION	DATE

STATE OF TEXAS
JENNIFER C. FRANKLIN
118838
LICENSED PROFESSIONAL ENGINEER
9-15-24

PAPE-DAWSON ENGINEERS
AUSTIN | SAN ANTONIO | HOUSTON | FORT WORTH | DALLAS
10801 N MOPAC EXPY, BLDG 3, STE 200 | AUSTIN, TX 78759 | 512.454.8711
TBPE FIRM REGISTRATION #470 | TBPLS FIRM REGISTRATION #10028801

RANCHO DEL CIELO - PHASE 4B
WILLIAMSON COUNTY, TEXAS

OVERALL WATER PLAN

CITY JOB No.
JOB NO. 51118-61
DATE SEPTEMBER 2024
DESIGNER TS
CHECKED DRAWN CE/JM
SHEET 22 OF 36

Date: Sep 24, 2024, 4:04pm User ID: tstephens
File: H:\Projects\51118\60_Phase 5\301 Construction Documents\Civil\OW51118-61.dwg
THIS DOCUMENT HAS BEEN PRODUCED FROM MATERIAL THAT WAS STORED AND/OR TRANSMITTED ELECTRONICALLY AND MAY HAVE BEEN INADVERTENTLY ALTERED. RELY ONLY ON FINAL HARDCOPY MATERIALS BEARING THE CONSULTANT'S ORIGINAL SIGNATURE AND SEAL.

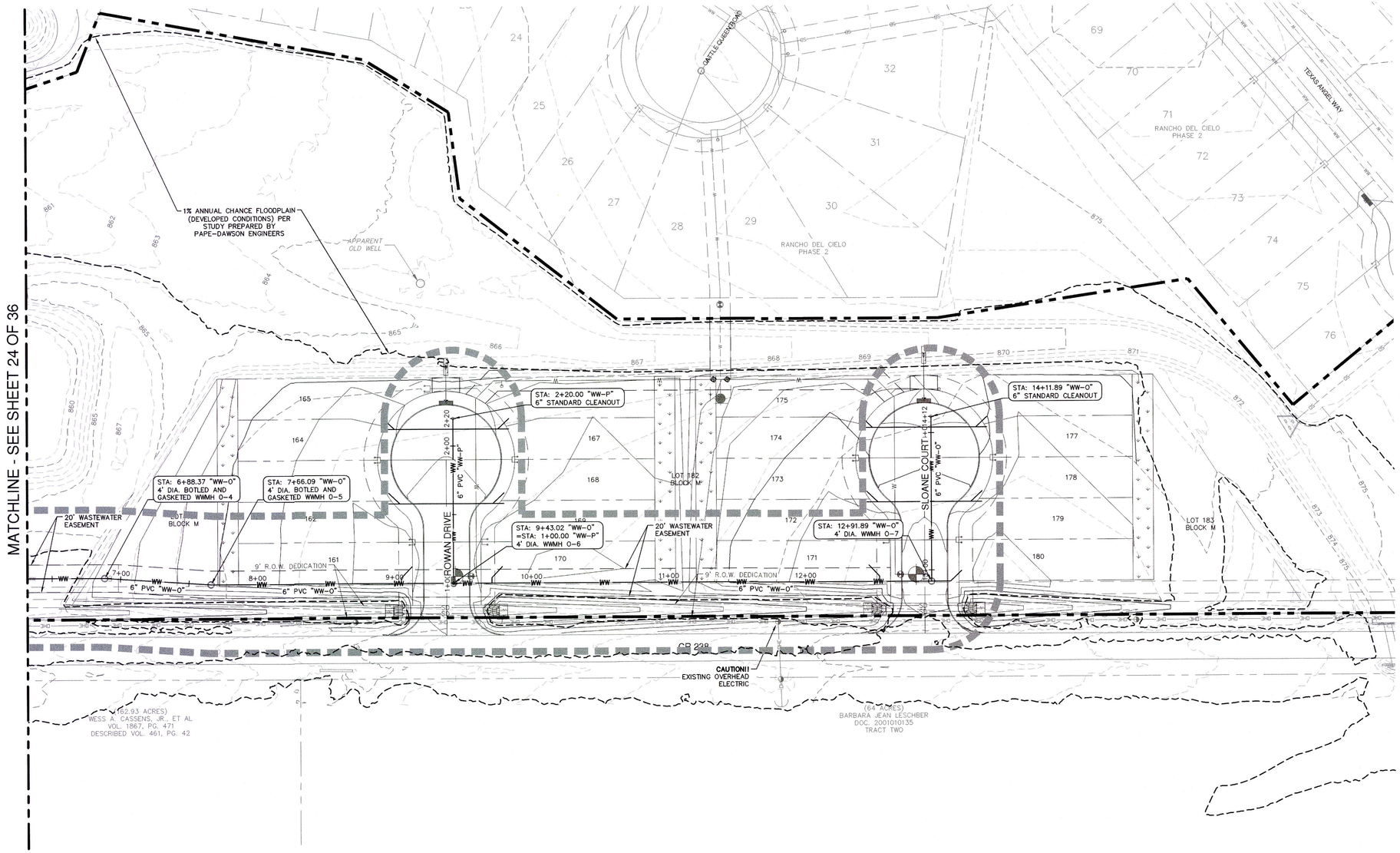

SCALE: 1"= 40'

0' 40' 80' 120'

LEGEND

- WATER LINE
- WASTEWATER LINE & MH
- STORM DRAIN LINE & MH
- CURB INLET
- SINGLE WATER SERVICE
- DOUBLE WATER SERVICE
- SINGLE WW SERVICE
- DOUBLE WW SERVICE
- GATE VALVE
- FIRE HYDRANT
- EXISTING GATE VALVE
- EXISTING FIRE HYDRANT
- EXISTING WATER LINE
- EXISTING WASTEWATER LINE
- EXISTING STORM DRAIN LINE
- EXISTING FORCE MAIN LINE
- 50' SCS BUFFER

NOTES

1. CONTRACTOR TO FIELD VERIFY LOCATIONS OF EXISTING UTILITIES AND IMPROVEMENTS AND NOTIFY ENGINEER IF DISCREPANCIES EXIST.

NO.	REVISION	DATE

STATE OF TEXAS
JENNIFER C. FRANKLIN
118838
LICENSED PROFESSIONAL ENGINEER
9-30-24

PAPE-DAWSON ENGINEERS
AUSTIN | SAN ANTONIO | HOUSTON | FORT WORTH | DALLAS
10801 N MOPAC EXPY, BLDG 3, STE 200 | AUSTIN, TX 78759 | 512.454.8711
TBPE FIRM REGISTRATION #470 | TBPLS FIRM REGISTRATION #10028801

RANCHO DEL CIELO - PHASE 4B
WILLIAMSON COUNTY, TEXAS

OVERALL WASTEWATER PLAN 1 OF 2

CITY JOB No.
JOB NO. 51118-61
DATE SEPTEMBER 2024
DESIGNER TS
CHECKED DRAWN CE/JM
SHEET 23 OF 36

Date: Sep 30, 2024, 3:57pm User ID: tstephens
File: H:\Projects\51\118\60_Phase 5\30\ Construction Documents\Civil\051118-61.dwg

THIS DOCUMENT HAS BEEN PRODUCED FROM MATERIAL THAT WAS STORED AND/OR TRANSMITTED ELECTRONICALLY AND MAY HAVE BEEN INADVERTENTLY ALTERED. RELY ONLY ON FINAL HARDCOPY MATERIALS BEARING THE CONSULTANT'S ORIGINAL SIGNATURE AND SEAL.

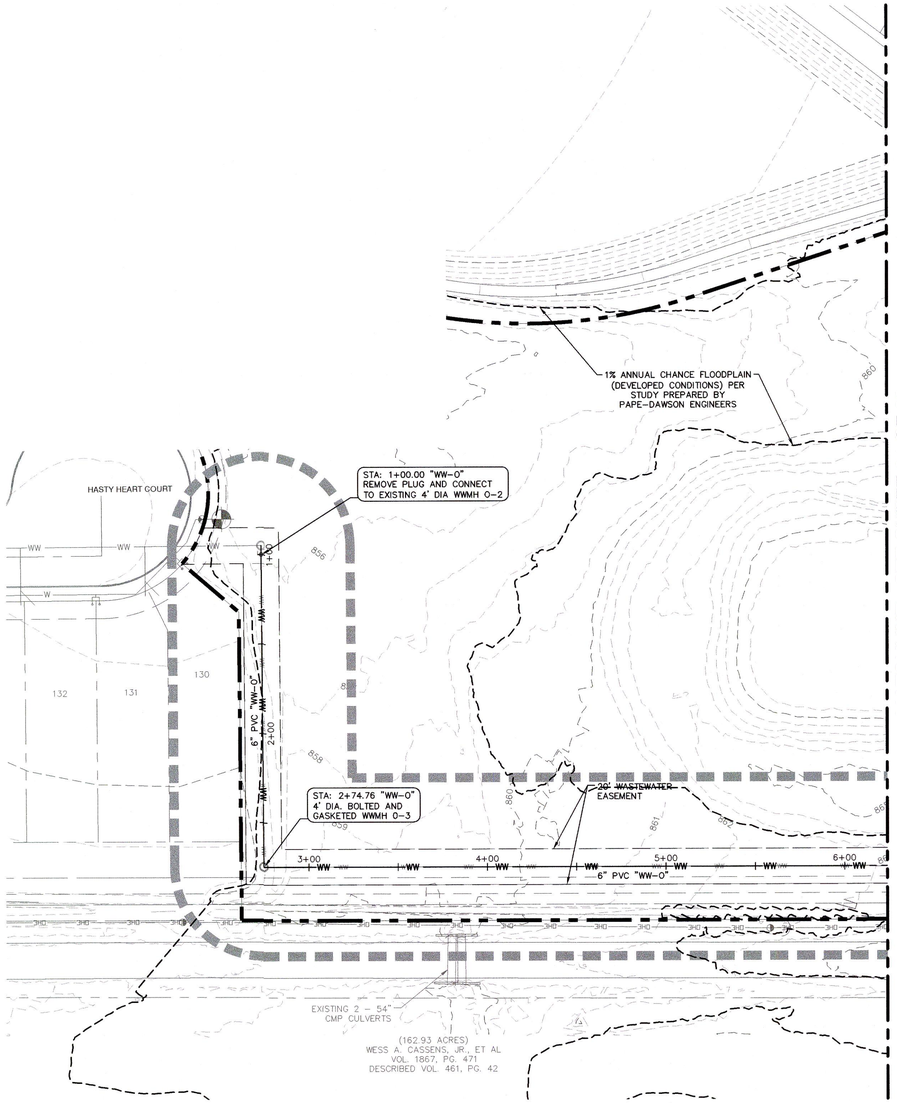

SCALE: 1"= 40'

0' 40' 80' 120'

LEGEND

- WATER LINE
- WASTEWATER LINE & MH
- STORM DRAIN LINE & MH
- CURB INLET
- SINGLE WATER SERVICE
- DOUBLE WATER SERVICE
- SINGLE WW SERVICE
- DOUBLE WW SERVICE
- GATE VALVE
- FIRE HYDRANT
- EXISTING GATE VALVE
- EXISTING FIRE HYDRANT
- EXISTING WATER LINE
- EXISTING WASTEWATER LINE
- EXISTING STORM DRAIN LINE
- EXISTING FORCE MAIN LINE
- 50' SCS BUFFER

NOTES

1. CONTRACTOR TO FIELD VERIFY LOCATIONS OF EXISTING UTILITIES AND IMPROVEMENTS AND NOTIFY ENGINEER IF DISCREPANCIES EXIST.

NO.	REVISION	DATE

STATE OF TEXAS
JENNIFER C. FRANKLIN
118838
LICENSED
PROFESSIONAL ENGINEER
9-30-24

PAPE-DAWSON ENGINEERS
AUSTIN I SAN ANTONIO I HOUSTON I FORT WORTH I DALLAS
10801 N MOPAC EXPY, BLDG 3, STE 200 I AUSTIN, TX 78759 I 512.454.8711
TBPE FIRM REGISTRATION #470 I TBPLS FIRM REGISTRATION #10028801

RANCHO DEL CIELO - PHASE 4B
WILLIAMSON COUNTY, TEXAS

OVERALL WASTEWATER PLAN 2 OF 2

CITY JOB No.
JOB NO. 51118-61
DATE SEPTEMBER 2024
DESIGNER TS
CHECKED DRAWN CE/JM
SHEET 24 OF 36

Date: Sep 30, 2024, 3:57pm User ID: tstephens
File: H:\Projects\511\18\60_Phase 5\301 Construction Documents\Civil\OS51118-61.dwg

THIS DOCUMENT HAS BEEN PRODUCED FROM MATERIAL THAT WAS STORED AND/OR TRANSMITTED ELECTRONICALLY AND MAY HAVE BEEN INADVERTENTLY ALTERED. RELY ONLY ON FINAL HARDCOPY MATERIALS BEARING THE CONSULTANT'S ORIGINAL SIGNATURE AND SEAL.

Date: Sep 30, 2024, 2:38pm User ID: jessemesa
File: H:\Projects\511\18\60_Phase 5\301 Construction Documents\Civil\SSP51118-61.dwg

THIS DOCUMENT HAS BEEN PRODUCED FROM MATERIAL THAT WAS STORED AND/OR TRANSMITTED ELECTRONICALLY AND MAY HAVE BEEN INADVERTENTLY ALTERED. RELY ONLY ON FINAL HARDCOPY MATERIALS BEARING THE CONSULTANT'S ORIGINAL SIGNATURE AND SEAL.

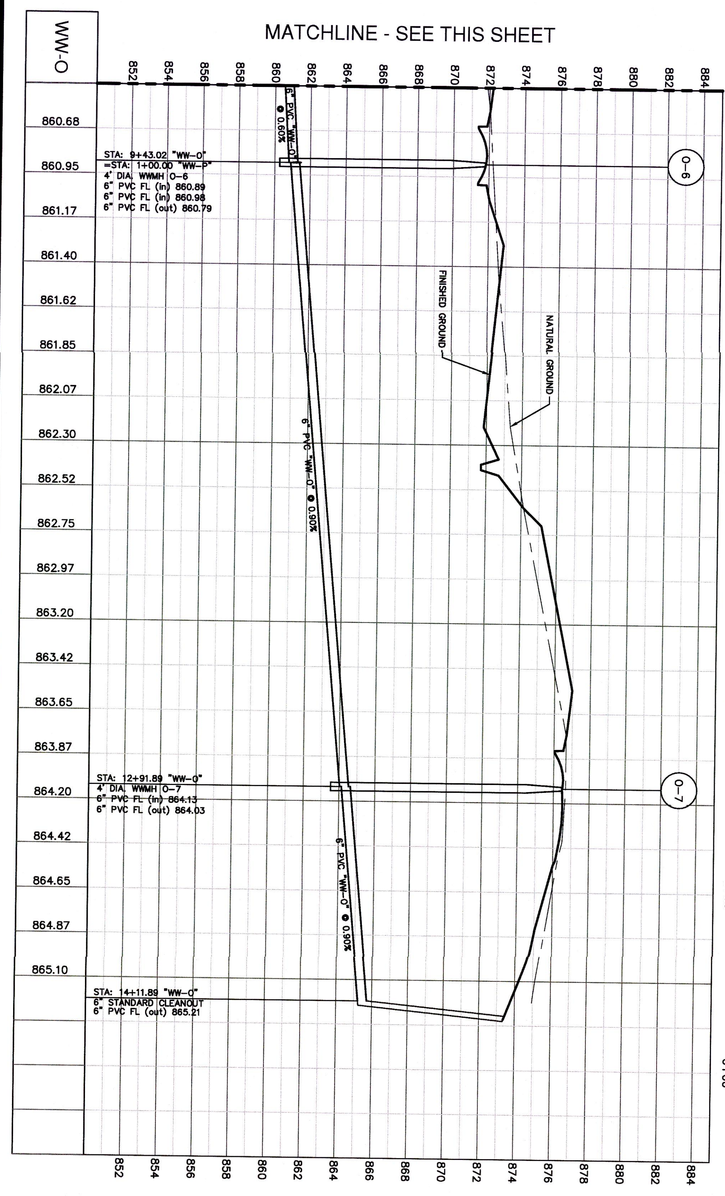

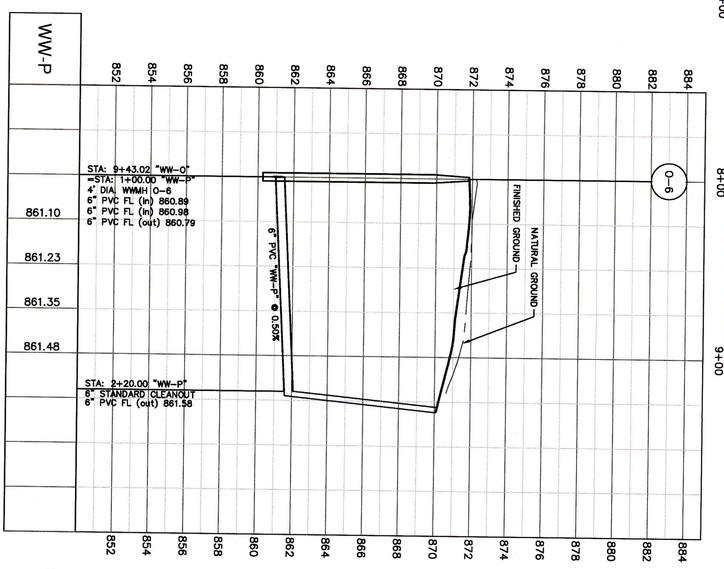

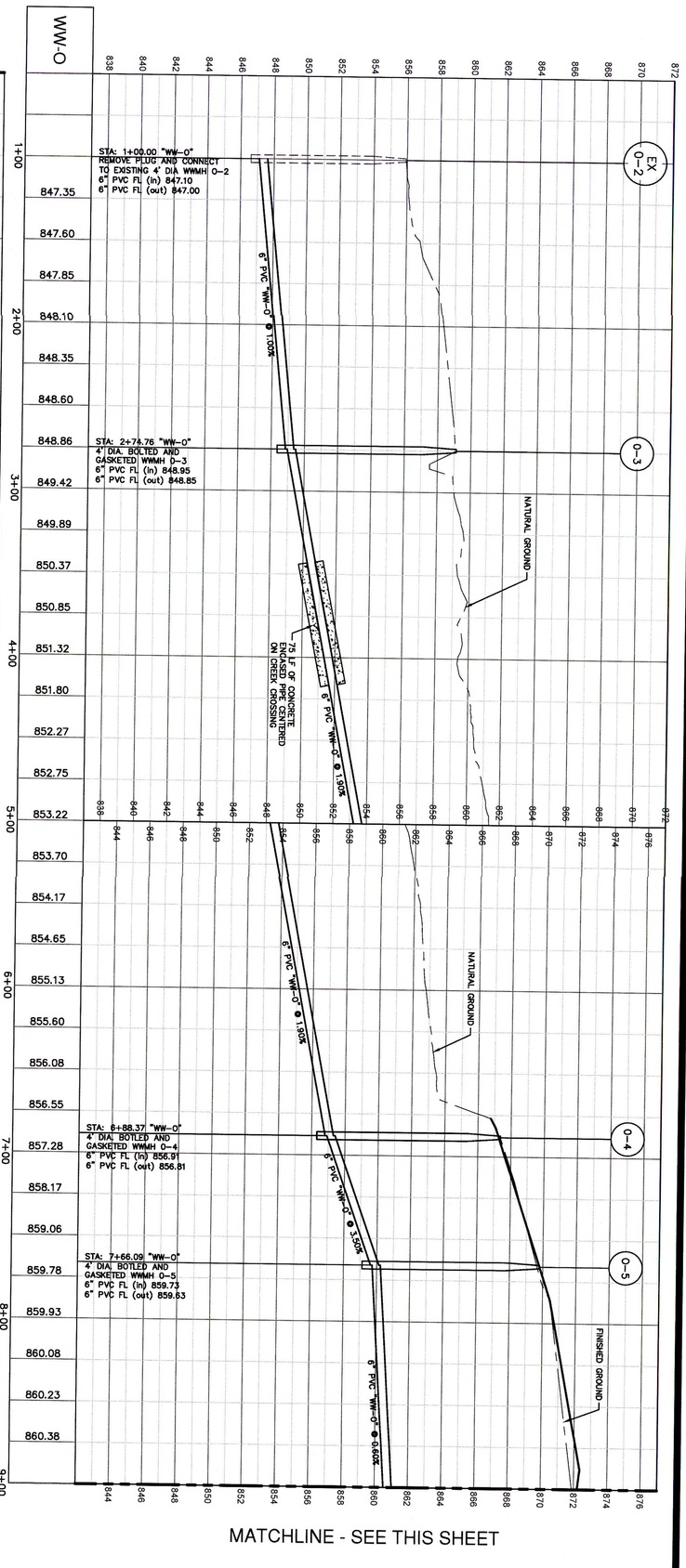

PROFILE SCALES:
1" = 40' HORIZONTAL
1" = 4' VERTICAL

PROFILE LEGEND:
NATURAL GROUND
SUBGRADE
FINISHED GRADE
PROPOSED WASTEWATER
1-JOINT OF PRESSURE PIPE
STEEL ENCASEMENT WITH SPACERS SEE CONSTRUCTION DETAILS

CITY JOB No.
JOB NO. 51118-61
DATE SEPTEMBER 2024
DESIGNER TS
CHECKED DRAWN CE/JM
SHEET 25 OF 36

RANCHO DEL CIELO - PHASE 4B
WILLIAMSON COUNTY, TEXAS

WASTEWATER PLAN & PROFILE
WW-O & WW-P

PAPE-DAWSON ENGINEERS
AUSTIN | SAN ANTONIO | HOUSTON | FORT WORTH | DALLAS
10801 N MOPAC EXPY, BLDG 3, STE 200 | AUSTIN, TX 78759 | 512.454.8711
TBPE FIRM REGISTRATION #470 | TBPLS FIRM REGISTRATION #10028801

STATE OF TEXAS
JENNIFER C. FRANKLIN
118836
LICENSED
PROFESSIONAL ENGINEER
9-30-24

NO.	REVISION	DATE

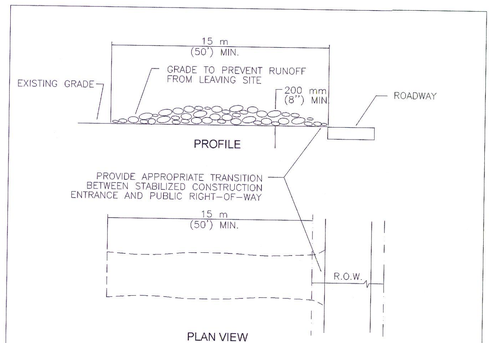

NOTES:

1. STONE SIZE: 75-125 mm (3-5") OPEN GRADED ROCK.
2. LENGTH: AS EFFECTIVE BUT NOT LESS THAN 15 m (50').
3. THICKNESS: NOT LESS THAN 200 mm (8").
4. WIDTH: NOT LESS THAN FULL WIDTH OF ALL POINTS OF INGRESS/EGRESS.
5. WASHING: WHEN NECESSARY, VEHICLE WHEELS SHALL BE CLEANED TO REMOVE SEDIMENT PRIOR TO ENTRANCE ONTO PUBLIC ROADWAY. WHEN WASHING IS REQUIRED, IT SHALL BE DONE ON AN AREA STABILIZED WITH CRUSHED STONE AND DRAINS INTO AN APPROVED TRAP OR SEDIMENT BASIN. ALL SEDIMENT SHALL BE PREVENTED FROM ENTERING ANY STORM DRAIN, DITCH OR WATERCOURSE USING APPROVED METHODS.
6. MAINTENANCE: THE ENTRANCE SHALL BE MAINTAINED IN A CONDITION THAT WILL PREVENT TRACKING OR FLOWING OF SEDIMENT ONTO PUBLIC ROADWAY. THIS MAY REQUIRE PERIODIC TOP DRESSING WITH ADDITIONAL STONE AS CONDITIONS DEMAND, AS WELL AS REPAIR AND CLEAN OUT OF ANY MEASURE DEVICES USED TO TRAP SEDIMENT. ALL SEDIMENTS THAT IS SPILLED, DROPPED, WASHED OR TRACKED ONTO PUBLIC ROADWAY MUST BE REMOVED IMMEDIATELY.
7. DRAINAGE: ENTRANCE MUST BE PROPERLY GRADED OR INCORPORATE A DRAINAGE SWALE TO PREVENT RUNOFF FROM LEAVING THE CONSTRUCTION SITE.

CITY OF AUSTIN WATERSHED PROTECTION DEPARTMENT	STABILIZED CONSTRUCTION ENTRANCE	
RECORD COPY SIGNED BY J. PATRICK MURPHY 5/23/00 ADOPTED	THE ARCHITECT/ENGINEER ASSUMES RESPONSIBILITY FOR APPROPRIATE USE OF THIS STANDARD.	STANDARD NO. 641S-1

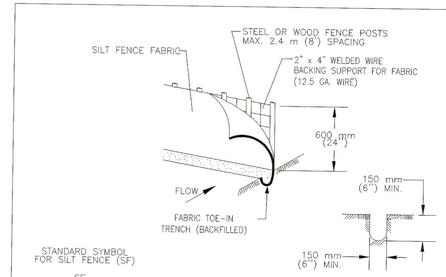

1. STEEL OR WOOD POSTS WHICH SUPPORT THE SILT FENCE SHALL BE INSTALLED ON A SLIGHT ANGLE TOWARD THE ANTICIPATED RUNOFF SOURCE. POST MUST BE EMBEDDED A MINIMUM OF 300 mm (12 INCHES). IF WOOD POSTS CANNOT ACHIEVE 300 mm (12 inches) DEPTH, USE STEEL POSTS.
2. THE TOE OF THE SILT FENCE SHALL BE TRENCHED IN WITH A SPADE OR MECHANICAL TRENCHER, SO THAT THE DOWNSLOPE FACE OF THE TRENCH IS FLAT AND PERPENDICULAR TO THE LINE OF FLOW.
3. THE TRENCH MUST BE A MINIMUM OF 150 mm (6 inches) DEEP AND 150 mm (6 inches) WIDE TO ALLOW FOR THE SILT FENCE FABRIC TO BE LAID IN THE GROUND AND BACKFILLED WITH COMPACTED MATERIAL.
4. SILT FENCE FABRIC SHOULD BE SECURELY FASTENED TO EACH STEEL OR WOOD SUPPORT POST OR TO WOVEN WIRE , WHICH IS IN TURN ATTACHED TO THE STEEL OR WOOD FENCE POST.
5. INSPECTION SHALL BE MADE WEEKLY OR AFTER EACH RAINFALL EVENT AND REPAIR OR REPLACEMENT SHALL BE MADE PROMPTY AS NEEDED.
6. SILT FENCE SHALL BE REMOVED WHEN THE SITE IS COMPLETELY STABILIZED SO AS NOT TO BLOCK OR IMPEDE STORM FLOW OR DRAINAGE.
7. ACCUMULATED SILT SHALL BE REMOVED WHEN IT REACHES A DEPTH OF 150 mm (6 inches). THE SILT SHALL BE DISPOSED OF ON AN APPROVED SITE AND IN SUCH A MANNER THAT WILL NOT CONTRIBUTE TO ADDITONAL SILTATION.

CITY OF AUSTIN WATERSHED PROTECTION DEPARTMENT	SILT FENCE	
RECORD COPY SIGNED BY MORGAN BYARS 09/01/2011 ADOPTED	THE ARCHITECT/ENGINEER ASSUMES RESPONSIBILITY FOR APPROPRIATE USE OF THIS STANDARD.	STANDARD NO. 642S-1

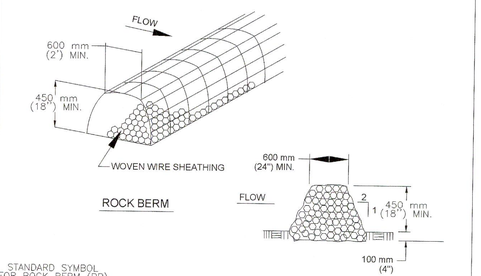

NOTES:

1. USE ONLY OPEN GRADED ROCK 75 to 125 mm (3 to 5") DIAMETER FOR ALL CONDITIONS.
2. THE ROCK BERM SHALL BE SECURED WITH A WOVEN WIRE SHEATHING HAVING MAXIMUM 25 mm (1") OPENING AND MINIMUM WIRE DIAMETER OF 12.9 mm (20 GAUGE).
3. THE ROCK BERM SHALL BE INSPECTED DAILY OR AFTER EACH RAIN, AND THE STONE AND/OR FABRIC CORE-WOVEN SHEATHING SHALL BE REPLACED WHEN THE STRUCTURE CEASES TO FUNCTION AS INTENDED, DUE TO SEDIMENT ACCUMULATION AMONG THE ROCKS, WASHOUT, CONSTRUCTION TRAFFIC DAMAGE, ETC.
4. IF SEDIMENT REACHES A DEPTH EQUAL TO ONE-THIRD THE HEIGHT OF THE BERM OR 150 mm (6"), WHICHEVER IS LESS, THE SEDIMENT SHALL BE REMOVED AND DISPOSED OF ON AN APPROVED SITE AND IN A MANNER THAT WILL NOT CREATE A SEDIMENTION PROBLEM.
5. WHEN THE SITE IS COMPLETELY STABILIZED,THE BERM AND ACCUMULATED SEDIMENT SHALL BE REMOVED AND DISPOSED OF IN AN APPROVED MANNER.

CITY OF AUSTIN WATERSHED PROTECTION DEPARTMENT	ROCK BERM	
RECORD COPY SIGNED BY MORGAN BYARS 8/24/2010 ADOPTED	THE ARCHITECT/ENGINEER ASSUMES RESPONSIBILITY FOR APPROPRIATE USE OF THIS STANDARD.	STANDARD NO. 639S-1

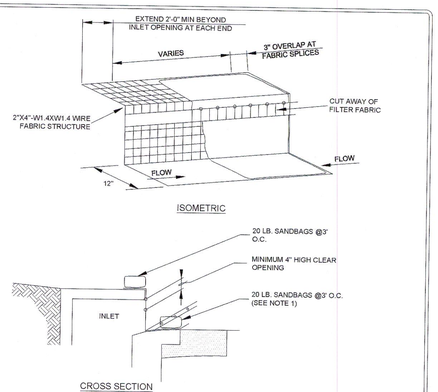

NOTES:

1. WHERE MINIMUM CLEARANCES CAUSE TRAFFIC TO DRIVE IN THE GUTTER, THE CONTRACTOR MAY SUBSTITUTE A 1" X 4" BOARD SECURED WITH CONCRETE NAILS 3' O.C. NAILED INTO THE GUTTER IN LIEU OF SANDBAGS TO HOLD THE FILTER DIKE IN PLACE. UPON REMOVAL, CLEAN ANY DIRT/DEBRIS FROM NAILING LOCATIONS. APPLY CHEMICAL SANDING AGENT AND APPLY NON-SHRINK GROUT FLUSH WITH SURFACE OF GUTTER.
2. A SECTION OF FILTER FABRIC SHALL BE REMOVED AS SHOWN ON THIS DETAIL OR AS DIRECTED BY THE ENGINEER OR DESIGNATED REPRESENTATIVE. FABRIC MUST BE SECURED TO WIRE BACKING WITH CLIPS OR HOG RINGS AT THIS LOCATION.
3. DAILY INSPECTION SHALL BE MADE BY THE CONTRACTOR AND SILT ACCUMULATION MUST BE REMOVED WHEN DEPTH REACHES 2".
4. CONTRACTOR SHALL MONITOR THE PERFORMANCE OF INLET PROTECTION DURING EACH RAINFALL EVENT AND IMMEDIATELY REMOVE THE INLET PROTECTIONS IF THE STORM-WATER BEGINS TO OVERTOP THE CURB.
5. INLET PROTECTIONS SHALL BE REMOVED AS SOON AS THE SOURCE OF SEDIMENT IS STABILIZED.

RECORD SIGNED COPY ON FILE AT PUBLIC WORKS APPROVED 03-25-11 DATE THE ARCHITECT/ENGINEER ASSUMES RESPONSIBILITY FOR THE APPROPRIATE USE OF THIS DETAIL (NOT TO SCALE)	CITY OF ROUND ROCK CURB INLET PROTECTION DETAIL	DRAWING NO. EC-14

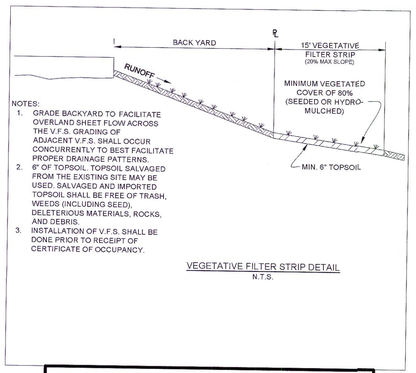

NOTES:

1. GRADE BACKYARD TO FACILITATE OVERLAND SHEET FLOW ACROSS THE V.F.S. GRADING OF ADJACENT V.F.S. SHALL OCCUR CONCURRENTLY TO BEST FACILITATE PROPER DRAINAGE PATTERNS.
2. 6" OF TOPSOIL. TOPSOIL SALVAGED FROM THE EXISTING SITE MAY BE USED. SALVAGED AND IMPORTED TOPSOIL SHALL BE FREE OF TRASH, WEEDS (INCLUDING SEED), DELETERIOUS MATERIALS, ROCKS, AND DEBRIS.
3. INSTALLATION OF V.F.S. SHALL BE DONE PRIOR TO RECEIPT OF CERTIFICATE OF OCCUPANCY.

VEGETATIVE FILTER STRIP DETAIL
N.T.S.

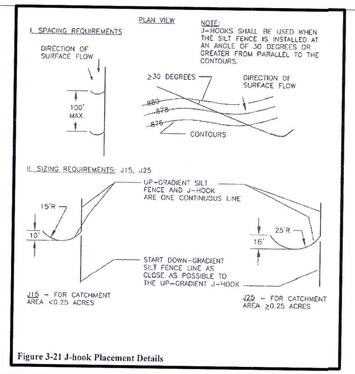

Figure 3-21 J-hook Placement Details

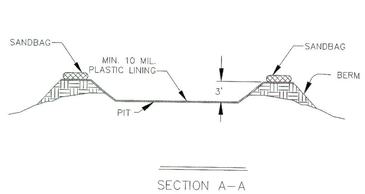

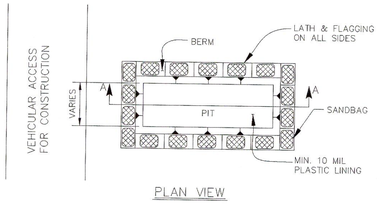

GENERAL NOTES:

1) Detail above illustrates minimum dimensions. Pit can be increased in size depending on expected frequency of use.
2) Washout pit shall be located in an area easily accessible to construction traffic.
3) Washout pit shall not be located in areas subject to inundation from storm water runoff.
4) Locate washout area at least 50 feet from sensitive features, storm drains, open ditches, or water bodies.
5) Temporary concrete washout facility should be constructed with sufficient quantity and volume to contain all liquid and concrete waste generated by washout operations.

MATERIALS:

1) Plastic lining material should be a minimum of 10 mil in polyethylene sheeting and should be free of holes, tears, or other defects that compromise the impermeability of the material.

INSPECTION AND MAINTENANCE GUIDELINES:

1) When temporary concrete washout facilities are no longer required for the work, the hardened concrete should be removed and disposed of.
2) Materials used to construct temporary concrete washout facilities should be removed from the site of the work and disposed of.
3) Holes, depressions or other ground disturbance caused by the removal of the temporary concrete washout facilities should be backfilled and repaired.

CONCRETE TRUCK WASHOUT PIT

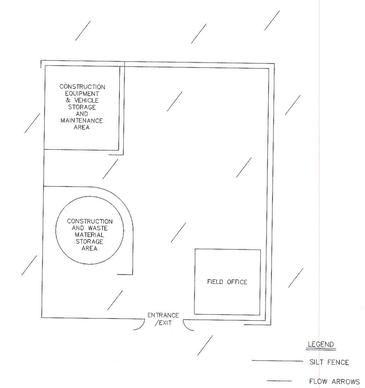

TYP. CONSTRUCTION STAGING AREA

NO.	REVISION	DATE

STATE OF TEXAS
JENNIFER C. FRANKLIN
118838
LICENSED PROFESSIONAL ENGINEER
9-25-24

PAPE-DAWSON ENGINEERS
AUSTIN | SAN ANTONIO | HOUSTON | FORT WORTH | DALLAS
10801 N MOPAC EXPY, BLDG 3, STE 200 | AUSTIN, TX 78759 | 512.454.8711
TBPE FIRM REGISTRATION #470 | TBPLS FIRM REGISTRATION #10028801

RANCHO DEL CIELO - PHASE 4B
WILLIAMSON COUNTY, TEXAS
EROSION & SEDIMENTATION CONTROL DETAILS

CITY JOB No.
JOB NO. 51118-61
DATE SEPTEMBER 2024
DESIGNER TS
CHECKED DRAWN CE/JM
SHEET 26 OF 36

Date: Sep 24, 2024, 4:05pm User ID: tstephens
File: H:\Projects\51118-61_Phase 3\50 Construction Documents\Civil\DT51118-61.dwg

THIS DOCUMENT HAS BEEN PRODUCED FROM MATERIAL THAT WAS STORED AND/OR TRANSMITTED ELECTRONICALLY AND MAY HAVE BEEN INADVERTENTLY ALTERED. RELY ONLY ON FINAL HARDCOPY MATERIALS BEARING THE CONSULTANT'S ORIGINAL SIGNATURE AND SEAL.

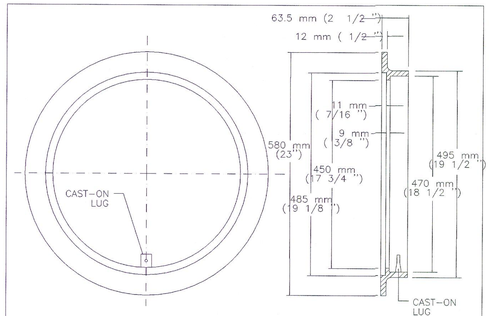

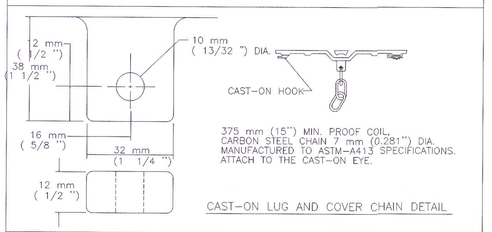

CITY OF AUTIN DEPARTMENT OF WATERSHED PROTECTION AND DEVELOPMENT REVIEW	457 mm (18") COVER AND FRAME	
RECORD COPY SIGNED BY GEORGE E. OSWALD 2/14/02 ADOPTED	THE ARCHITECT/ENGINEER ASSUMES RESPONSIBILITY FOR APPROPRIATE USE OF THIS STANDARD.	STANDARD NO. 503S-1 1 OF 2

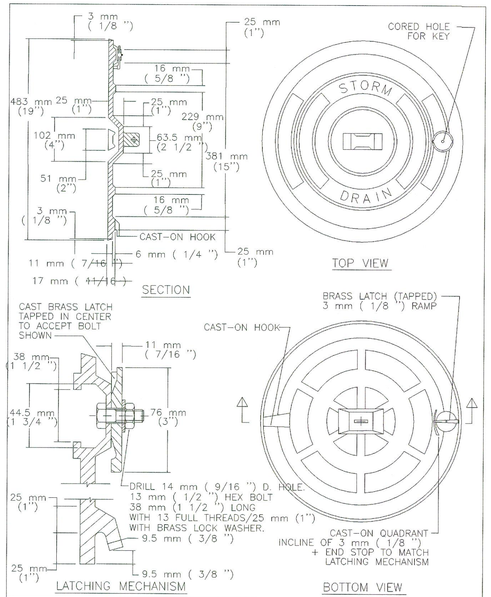

CITY OF AUTIN DEPARTMENT OF WATERSHED PROTECTION AND DEVELOPMENT REVIEW	457 mm (18") COVER AND FRAME	
RECORD COPY SIGNED BY GEORGE E. OSWALD 2/14/02 ADOPTED	THE ARCHITECT/ENGINEER ASSUMES RESPONSIBILITY FOR APPROPRIATE USE OF THIS STANDARD.	STANDARD NO. 503S-1 2 OF 2

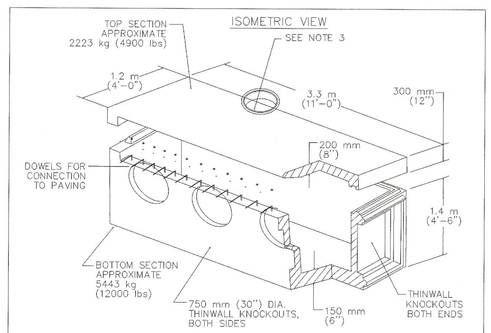

NOTES:
1. ALL CONCRETE SHALL BE CLASS "A" AS PER ITEM 403S.
2. ALL REINFORCING STEEL SHALL BE GRADE 60
3. MANHOLE FRAME AND COVER SHALL BE IN ACCORDANCE WITH CITY OF AUSTIN STANDARD 503S-1.
4. DIMENSIONS RELATING TO REINFORCING STEEL ARE TO CENTERS OF BARS.
5. IN AREAS OF CONFLICT BETWEEN REINFORCING STEEL, PIPES AND MANHOLE FRAME, THE REINFORCEMENT SHALL BE BENT OR ADJUSTED TO CLEAR AS DIRECTED BY THE ENGINEER.
6. PAYMENT FOR INLET AT THE CONTRACT PRICE SHALL INCLUDE THE TRANSITION CURB, IN ACCORDANCE WITH CITY OF AUSTIN STANDARD INLET DESIGN.
7. INVERT OF INLET SHALL BE SLOPED 1:20 WITH FILL CONCRETE BY CONTRACTOR, SHAPED AS "V" SECTION
8. THE INLET AS DESIGNED EXCEEDS THE REQUIREMENTS OF ASTM C478.
9. THIS STANDARD COMPLIES WITH THE CITY OF AUSTIN STANDARD SPECIFICATIONS ITEM NO. 508S.
10. FOR INLET CONNECTION VARIATIONS FOR MAKING A 6 m (20'-0") CURB INLET FROM STANDARD 3 m (10'-0") INLETS, SEE DALWORTH CURB INLET CONNECTION DETAIL SHEET DQ-86-103.

CITY OF AUTIN DEPARTMENT OF PUBLIC WORKS	CURB INLET 3 m (10') PRECAST TYPE 1 OR TYPE 1-R	
RECORD COPY SIGNED BY BILL GARDNER 12/09/08 ADOPTED	THE ARCHITECT/ENGINEER ASSUMES RESPONSIBILITY FOR APPROPRIATE USE OF THIS STANDARD.	STANDARD NO. 508S-4 1 OF 5

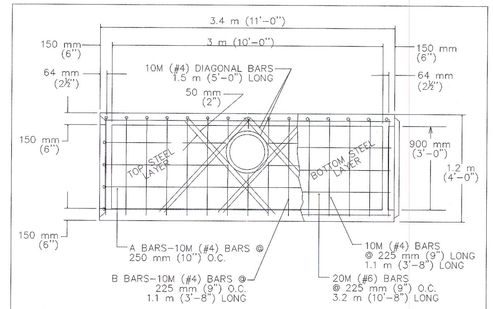

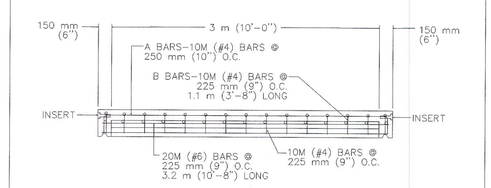

CITY OF AUTIN DEPARTMENT OF PUBLIC WORKS	CURB INLET 3 m (10') PRECAST TYPE 1 OR TYPE 1-R	
RECORD COPY SIGNED BY BILL GARDNER 12/09/08 ADOPTED	THE ARCHITECT/ENGINEER ASSUMES RESPONSIBILITY FOR APPROPRIATE USE OF THIS STANDARD.	STANDARD NO. 508S-4 2 OF 5

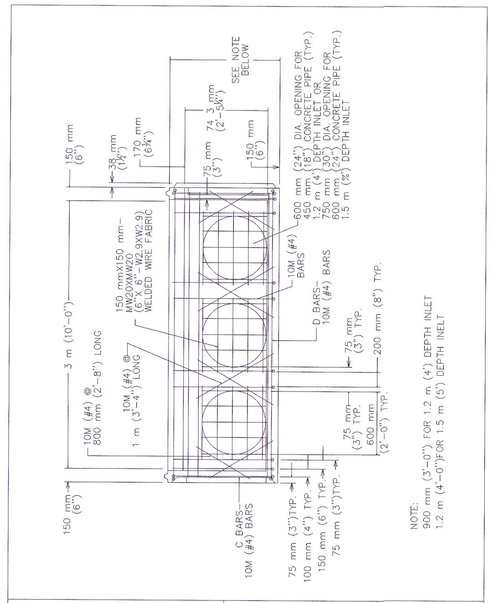

CITY OF AUTIN DEPARTMENT OF PUBLIC WORKS	CURB INLET 3 m (10') PRECAST TYPE 1 OR TYPE 1-R	
RECORD COPY SIGNED BY BILL GARDNER 12/09/08 ADOPTED	THE ARCHITECT/ENGINEER ASSUMES RESPONSIBILITY FOR APPROPRIATE USE OF THIS STANDARD.	STANDARD NO. 508S-4 3 OF 5

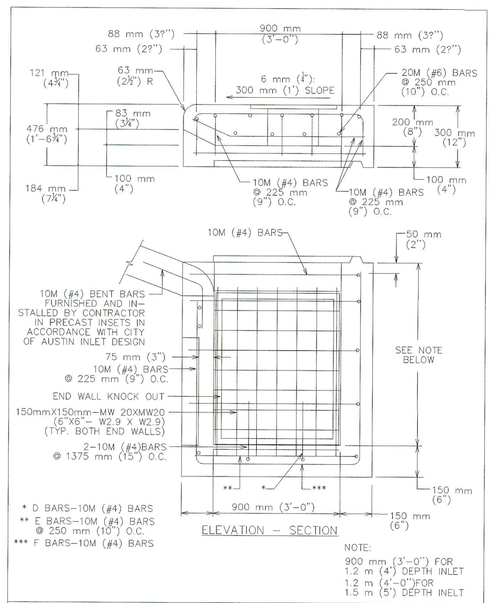

CITY OF AUTIN DEPARTMENT OF PUBLIC WORKS	CURB INLET 3 m (10') PRECAST TYPE 1 OR TYPE 1-R	
RECORD COPY SIGNED BY BILL GARDNER 12/09/08 ADOPTED	THE ARCHITECT/ENGINEER ASSUMES RESPONSIBILITY FOR APPROPRIATE USE OF THIS STANDARD.	STANDARD NO. 508S-4 4 OF 5

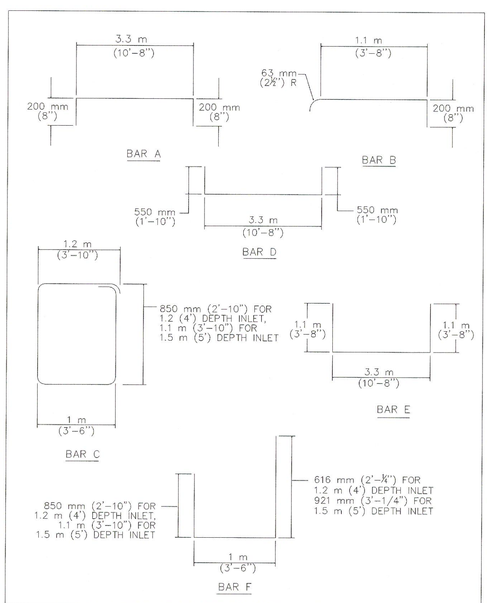

CITY OF AUTIN DEPARTMENT OF PUBLIC WORKS	CURB INLET 3 m (10') PRECAST TYPE 1 OR TYPE 1-R	
RECORD COPY SIGNED BY BILL GARDNER 12/09/08 ADOPTED	THE ARCHITECT/ENGINEER ASSUMES RESPONSIBILITY FOR APPROPRIATE USE OF THIS STANDARD.	STANDARD NO. 508S-4 5 OF 5

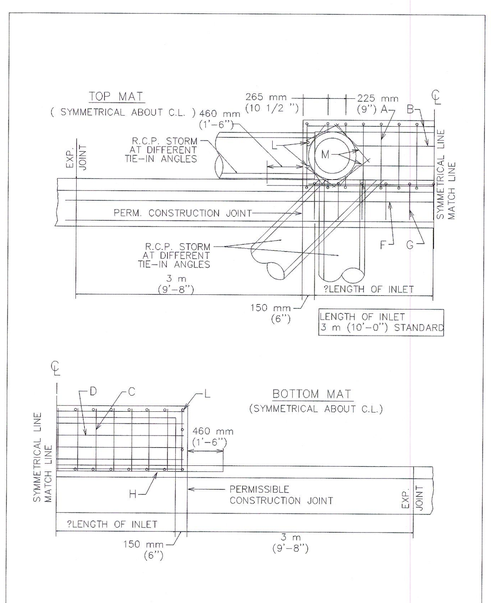

CITY OF AUTIN DEPARTMENT OF PUBLIC WORKS	TYPICAL DETAILS FOR CURB INLET	
RECORD COPY SIGNED BY BILL GARDNER 12/09/08 ADOPTED	THE ARCHITECT/ENGINEER ASSUMES RESPONSIBILITY FOR APPROPRIATE USE OF THIS STANDARD.	STANDARD NO. 508S-3 1 OF 4

NO. REVISION DATE

STATE OF TEXAS
JENNIFER C. FRANKLIN
118838
LICENSED
PROFESSIONAL ENGINEER
9-25-24

PAPE-DAWSON ENGINEERS
AUSTIN | SAN ANTONIO | HOUSTON | FORT WORTH | DALLAS
10801 N. MOPAC EXPY., BLDG 3, STE 200 | AUSTIN, TX 78759 | 512.454.8711
TBPE FIRM REGISTRATION #470 | TBPLS FIRM REGISTRATION #10028801

RANCHO DEL CIELO - PHASE 4B
WILLIAMSON COUNTY, TEXAS

DRAINAGE DETAILS 1 OF 3

CITY JOB No. 51118-61
JOB NO. 51118-61
DATE SEPTEMBER 2024
DESIGNER TS
CHECKED DRAWN CE/JM
SHEET 30 OF 36

Date: Sep 24, 2024, 4:06pm User ID: tstephens
File: H:\Projects\51118\60_Phase 5\301 Construction Documents\Civil\DT51118-61.dwg

THIS DOCUMENT HAS BEEN PRODUCED FROM MATERIAL THAT WAS STORED AND/OR TRANSMITTED ELECTRONICALLY AND MAY HAVE BEEN INADVERTENTLY ALTERED. RELY ONLY ON FINAL HARDCOPY MATERIALS BEARING THE CONSULTANT'S ORIGINAL SIGNATURE AND SEAL.

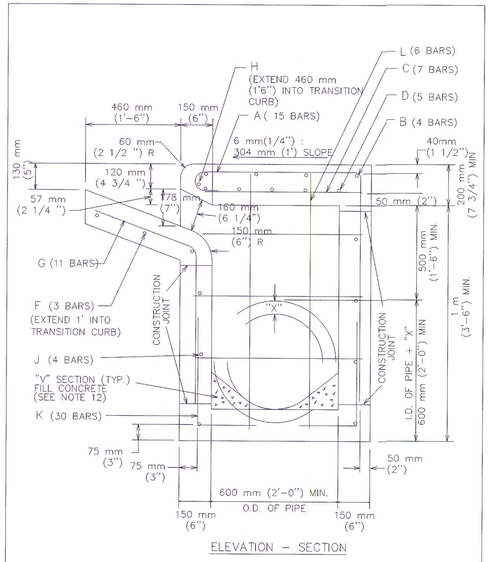

ELEVATION – SECTION

CITY OF AUSTIN DEPARTMENT OF PUBLIC WORKS	TYPICAL DETAILS FOR CURB INLET	
RECORD COPY SIGNED BY BILL GARDNER 12/09/08 ADOPTED	THE ARCHITECT/ENGINEER ASSUMES RESPONSIBILITY FOR APPROPRIATE USE OF THIS STANDARD.	STANDARD NO. 508S–3 2 OF 4

TABLE OF QUANTITIES
FOR 18" OUTLET PIPE
REINFORCING STEEL QUANTITIES

BARS	SIZE	SPACING	NUMBER	LENGTH	WEIGHT
A	4	230mm (9")*	15	2 m (7'–0")	73
B	4	250 mm (10")	4	3.25 m (10'–8")	29
C	4	460 mm (18")	7	760 mm (2'–6")	12
D	6	150 mm (6")	5	3.25 m (10'–8")	80
E	4	300 mm (12")	6	760 mm (2'–6")	10
F	4	250 mm (10")	3	4 m (13'–0")	35
G	4	300 mm (12")	11	1.25 m (4'–3")	31
H	6	–	1	4.25 m (14'–0")	20
J	4	300 mm (12")	7	3.25 m (10'–8")	50
K	4	230 mm (9")*	30	800 mm (2'–7 1/2")	52
L	4	300 mm (12")*	6	1.3 m (4'–4")	17
M	4	–	4	500 mm (1'–8") AVG	4
TOTAL STEEL, LB.					413
TOTAL CONCRETE, C.Y.					4.06

* EXCEPT AS SHOWN ON PLAN

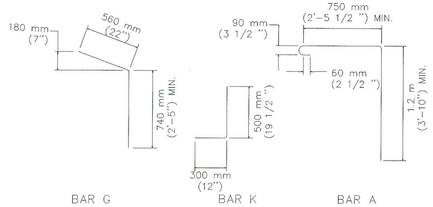

BAR G BAR K BAR A

CITY OF AUSTIN DEPARTMENT OF PUBLIC WORKS	TYPICAL DETAILS FOR CURB INLET	
RECORD COPY SIGNED BY BILL GARDNER 12/09/08 ADOPTED	THE ARCHITECT/ENGINEER ASSUMES RESPONSIBILITY FOR APPROPRIATE USE OF THIS STANDARD.	STANDARD NO. 508S–3 3 OF 4

NOTES:
1. ALL CONCRETE SHALL BE CLASS "A"
2. ALL REINFORCING STEEL SHALL BE GRADE 60
3. DIMENSIONS RELATING TO REINFORCING STEEL ARE TO CENTERS OF BARS.
4. VERTICAL STEEL MAY BE SPLICED (380 mm or 15" MIN. LAP) IN THE LOWER ONE–HALF OF ALL INLET WALLS.5. IN AREAS OF CONFLICT BETWEEN REINFORCING STEEL, PIPES AND MANHOLE FRAME, THE REINFORCEMENT SHALL BE BENT OR ADJUSTED TO CLEAR AS DIRECTED BY THE ENGINEER.
6. QUANTITIES SHOWN HEREON ARE FOR THE CONTRACTOR'S INFORMATION ONLY. PAYMENT WILL BE MADE FOR EACH INLET OF THE TYPE SPECIFIED, COMPLETE IN PLACE INCLUDING MANHOLE FRAME AND OVER.
7. CHAMFER ALL EXPOSED EDGES 20 mm (3/4 ").
8. MANHOLE FRAME AND COVER SHALL BE IN ACCORDANCE WITH CITY OF AUSTIN STANDARD 503S–1.
9. THE CONTRACTOR MAY PROPOSE ALTERNATE PROCEDURES FOR THE CONSTRUCTION OF INLETS, INCLUDING PRECAST UNITS. PLANS FOR SUCH PROPOSED ALTERNATES SHALL BE SUBMITTED TO THE ENGINEER FOR REVIEW AND APPROVAL BEFORE CONSTRUCTION.
10. ALL INLET WALLS SHALL BE FORMED EXCEPT WHERE THE NATURE OF THE SURROUNDING MATERIAL IS SUCH THAT IT CAN BE TRIMMED TO A SMOOTH VERTICAL FACE. WHEN INLET WALLS ARE PLACED TO NEAT EXCAVATION LINES THE WALL THICKNESS SHALL NOT EXCEED 10 INCHES.
11. PAYMENT FOR INLET AT THE CONTRACT PRICE SHALL INCLUDE THE TRANSITION CURB.
12. INVERT OF INLET SHALL BE SLOPED 1:20 WITH FILL CONCRETE, SHAPED AS "V" SECTION.
13. NO SPLICING OF REINFORCING STEEL SHALL BE PERMITTED UNLESS OTHERWISE NOTED ON THE PLANS OR PERMITTED IN WRITING BY THE ENGINEER.

REFERENCES:

FOR EXPANSION JOINT DOWEL AND DOWEL LOCATION DETAILS SEE STD. 430S–3, "CURB EXPANSION JOINT DOWEL DETAIL".

FOR 18" MANHOLE FRAME AND COVER DETAILS SEE STD. 503S–1, "18" COVER AND FRAME".

CITY OF AUSTIN DEPARTMENT OF PUBLIC WORKS	TYPICAL DETAILS FOR CURB INLET	
RECORD COPY SIGNED BY BILL GARDNER 12/09/08 ADOPTED	THE ARCHITECT/ENGINEER ASSUMES RESPONSIBILITY FOR APPROPRIATE USE OF THIS STANDARD.	STANDARD NO. 508S–3 4 OF 4

MINIMUM RIP–RAP QUANTITIES	
PIPE	SQ. YDS.
18"	6.2
24"	6.9
27"	7.8
30"	9.5
36"	10.4
42"	12.0
48"	14.3
54"	16.4

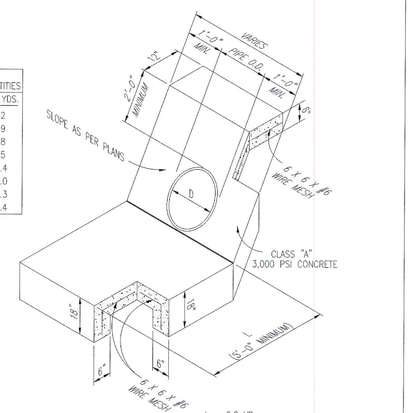

L = 0.2 VD
L = APRON LENGTH, FEET
V = CULVERT DISCHARGE VELOCITY FT/SEC.
D = HEIGHT OF BOX CULVERT OR DIAMETER OF PIPE CULVERT, FEET.

NOTES:
1. WHEN HEADWALLS AND WINGWALLS ARE REQUIRED, THEY SHALL CONFORM TO THE TEXAS DEPARTMENT OF TRANSPORTATION STANDARDS, OR AS DIRECTED BY THE CITY.
2. ENERGY DISSIPATERS SHALL BE REQUIRED IF PIPE VELOCITY IS GREATER THAN 5.0 F.P.S. OR AS DIRECTED BY THE CITY OF PFLUGERVILLE.
3. THE LENGTH OF THE CONCRETE APRON SHALL BE DETERMINED BY THE EQUATION LISTED ABOVE.

ISSUE DATE: FEBRUARY 2005	CITY OF PFLUGERVILLE	DWG. #SD–19
REVISIONS	TYP. CONCRETE RIP–RAP AT PIPE	SD20.DWG
DATE APPROVED DRAWN	CONSTRUCTION STANDARDS AND DETAILS	
SCALE: N.T.S.		

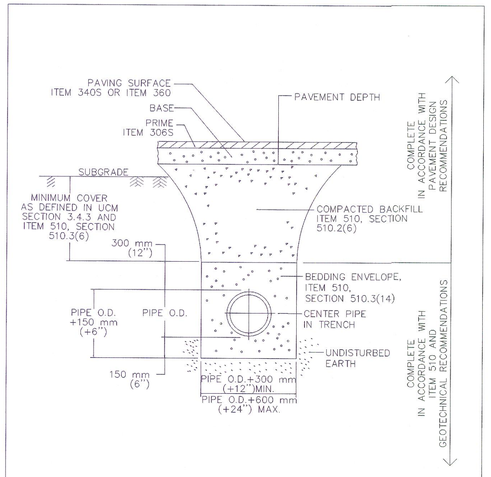

REFERENCES:
1. UTILITY CRITERIA MANUAL SECTION 3.4.3, "FINAL DESIGN"
2. STANDARD SPECIFICATION MANUAL ITEM 510, SECTION 510.2(6), "SELECT BACKFILL OR BORROW"; SECTION 510.3(6), "TRENCH DEPTH AND DEPTH OF COVER"; SECTION 510.3(14), "PIPE BEDDING ENVELOPE"

CITY OF AUSTIN DEPARTMENT OF PUBLIC WORKS	TYPICAL DETAIL FOR PROPOSED STREET	
RECORD COPY SIGNED BY BILL GARDNER 03/13/06 ADOPTED	THE ARCHITECT/ENGINEER ASSUMES RESPONSIBILITY FOR APPROPRIATE USE OF THIS STANDARD.	STANDARD NO. 510S–4

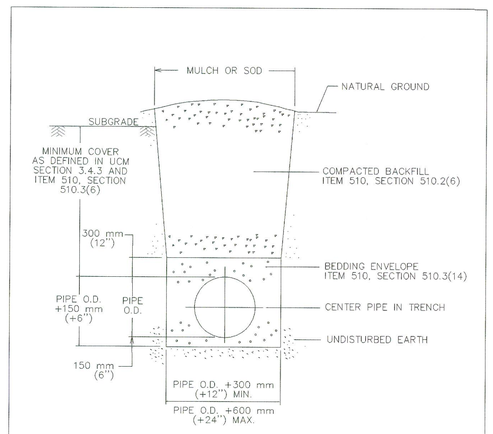

REFERENCES:
1. UTILITY CRITERIA MANUAL SECTION 3.4.3, "FINAL DESIGN"
2. STANDARD SPECIFICATION MANUAL ITEM 510, SECTION 510.2(6), "SELECT BACKFILL OR BORROW"; SECTION 510.3(6), "TRENCH DEPTH AND DEPTH OF COVER"; SECTION 510.3(14), "PIPE BEDDING ENVELOPE"

CITY OF AUSTIN DEPARTMENT OF PUBLIC WORKS	TYPICAL TRENCH DETAIL WITH UNFINISHED SURFACE	
RECORD COPY SIGNED BY BILL GARDNER 03/13/06 ADOPTED	THE ARCHITECT/ENGINEER ASSUMES RESPONSIBILITY FOR APPROPRIATE USE OF THIS STANDARD.	STANDARD NO. 510S–5

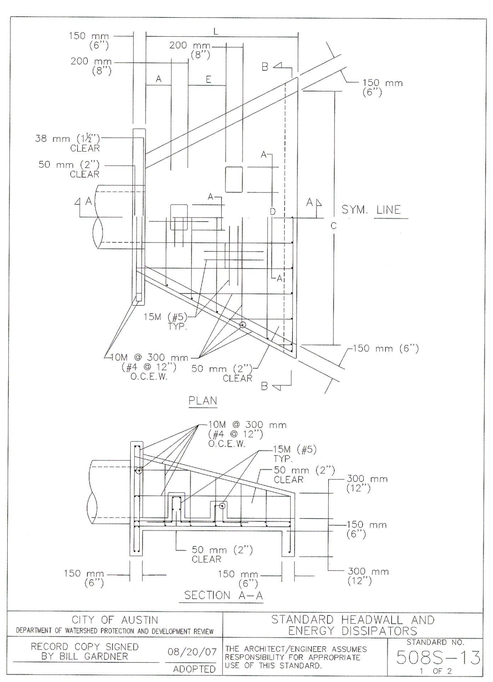

CITY OF AUSTIN DEPARTMENT OF WATERSHED PROTECTION AND DEVELOPMENT REVIEW	STANDARD HEADWALL AND ENERGY DISSIPATORS	
RECORD COPY SIGNED BY BILL GARDNER 08/20/07 ADOPTED	THE ARCHITECT/ENGINEER ASSUMES RESPONSIBILITY FOR APPROPRIATE USE OF THIS STANDARD.	STANDARD NO. 508S–13 1 OF 2

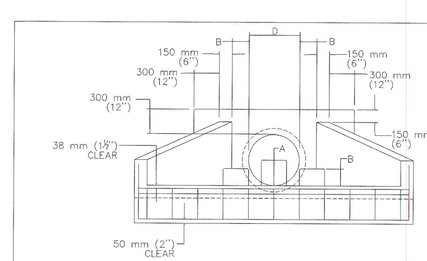

SECTION B–B

NOTES:
1. ALL CONCRETE SHALL BE TYPE "C" AS PER SPEC. 403S, CONCRETE FOR STURCTURES.
2. CHAMFER ALL EXTERNAL VISIBLE CORNERS.
3. DISSIPATOR BLOCKS REQUIRED ON DISCHARGE HEADWALLS ONLY.

D	457 mm (18")	533 mm (21")	610 mm (24")	685 mm (27")	765 mm (30")	838 mm (33")	914 mm (36")	1.067 m (42")	1.219 m (48")	1.372 m (54")	1.524 m (60")
A	225 mm (9")	250 mm (10")	300 mm (12")	350 mm (14")	375 mm (15")	400 mm (16")	450 mm (18")	525 mm (21")	600 mm (24")	675 mm (27")	750 mm (30")
B	150 mm (6")	175 mm (7")	200 mm (8")	225 mm (9")	250 mm (10")	275 mm (11")	300 mm (12")	350 mm (14")	400 mm (16")	450 mm (18")	500 mm (20")
C	2.29 m (90")	2.67 m (105")	3.05 m (120")	3.43 m (135")	3.81 m (150")	4.19 m (165")	4.57 m (180")	5.33 m (210")	6.10 m (240")	6.86 m (270")	7.62 m (300")
L	1.37 m (54")	1.60 m (63")	1.83 m (72")	2.06 m (81")	2.29 m (90")	2.51 m (99")	2.74 m (108")	3.20 m (126")	3.66 m (144")	4.11 m (162")	4.57 m (180")
E	300 mm (12")	350 mm (14")	400 mm (16")	450 mm (18")	500 mm (20")	550 mm (22")	600 mm (24")	700 mm (28")	800m (32")	900 mm (36")	1000 mm (40")

DIMENSIONS IN MILLIMETERS, METERS AND (INCHES).
DISCHARGE VELOCITIES GREATER THAN 3 METERS/SECOND (10 fps) REQUIRE ROCK OUTLET PROTECTION.

CITY OF AUSTIN DEPARTMENT OF WATERSHED PROTECTION AND DEVELOPMENT REVIEW	STANDARD HEADWALL AND ENERGY DISSIPATORS	
RECORD COPY SIGNED BY BILL GARDNER 08/20/07 ADOPTED	THE ARCHITECT/ENGINEER ASSUMES RESPONSIBILITY FOR APPROPRIATE USE OF THIS STANDARD.	STANDARD NO. 508S–13 2 OF 2

NO.	REVISION	DATE

STATE OF TEXAS
JENNIFER C. FRANKLIN
118838
LICENSED PROFESSIONAL ENGINEER
9-25-24

PAPE-DAWSON ENGINEERS
AUSTIN | SAN ANTONIO | HOUSTON | FORT WORTH | DALLAS
10801 N MOPAC EXPY., BLDG 3, STE 200 | AUSTIN, TX 78759 | 512.454.8711
TBPE FIRM REGISTRATION #470 | TBPLS FIRM REGISTRATION #10028801

RANCHO DEL CIELO - PHASE 4B
WILLIAMSON COUNTY, TEXAS

DRAINAGE DETAILS 2 OF 3

CITY JOB No.
JOB NO. 51118–61
DATE SEPTEMBER 2024
DESIGNER TS
CHECKED DRAWN CE/JM
SHEET 31 OF 36

Date: Sep 24, 2024, 4:06pm User ID: tstephens
File: I:\Projects\51118\401 Phase 3\300 Construction Documents\Civil\051118-61.dwg

THIS DOCUMENT HAS BEEN PRODUCED FROM MATERIAL THAT WAS STORED AND/OR TRANSMITTED ELECTRONICALLY AND MAY HAVE BEEN INADVERTENTLY ALTERED. RELY ONLY ON FINAL HARDCOPY MATERIALS BEARING THE CONSULTANT'S ORIGINAL SIGNATURE AND SEAL.

Special Specification 4216
Thermoplastic Pipe Culverts and Drains

1. DESCRIPTION

Furnish and install thermoplastic pipe for constructing thermoplastic pipe culverts and drains. In this Specification, all reference to thermoplastic pipe includes all pipe, joints, and fitting materials. Provide pipes of the sizes, types, design, and dimensions shown on the plans including the connections and joints to new or existing pipes, storm sewer, manholes, inlets, headwalls, and other appurtenances as required to complete the work. Use of this Specification requires concrete end treatment attached including concrete headwalls, wingwalls, and floor on exposed ends of pipe.

2. MATERIALS

Manufacturing plants must be approved in accordance with DMS-4710, "Thermoplastic Pipe, Joints, and Fittings" before furnishing thermoplastic pipe for Department projects. The Department's Material Producer List (MPL) has a list of approved manufacturing plants and products.

Unless otherwise specified on the plans furnish materials in accordance with the following:

- DMS-4710, "Thermoplastic Pipe, Joints, and Fittings"
- Item 400, "Excavation and Backfill for Structures"
- Item 401, "Flowable Backfill."

Provide excavatable flowable backfill when Item 401 is specified.

2.1. **Inspection.** The quality of materials, the process of manufacture, and the finished pipe will be subject to inspection and approval at the manufacturing plant. In addition, the finished pipe will be subject to further random inspection at the project site before and during installation.

2.2. **Joints.** Install the joints so that the connection of the pipe sections forms a continuous line free from irregularities in the flow line. If no joint type is specified, provide a soil-tight joint meeting the requirements of DMS-4710.

3. CONSTRUCTION

Construct the pipe at locations shown on the plans or as directed. Only trench installation of thermoplastic pipe will be permitted. Handle, store, place, joint, backfill plans, and as specified within.

3.1. **Contractor Submittals.** Submit to the Engineer the following documentation upon delivery of material.

- **Certificate of Compliance.** Submit a certificate of compliance of pipe product to the Department with the following information, manufacturing plant, date of manufacture, pipe dimensions, pipe stiffness, pipe flattening, brittleness, ASTM resin cell classification, and workmanship.
- **Installation Specifications.** Provide manufacturer's installation specifications to Engineer before beginning work. Include maximum fill depth and backfill requirements in manufacturer's installation specifications.

3.2. **Marking.** Install only pipe that is clearly marked at maximum 10 ft. intervals and clearly mark all couplings with:

- manufacturer's name or trademark,
- nominal size,
- specification designation (i.e., AASHTO M 294 or AASHTO M 330),

existing structures; moving and reusing headwalls where required; removing and disposing of portions of existing structures as required; cutting of pipe ends on skew; inspection and testing; and labor, tools, equipment, and incidentals.

Excavation, shaping, bedding, and backfill will be paid for in accordance with Item 400.

Flowable backfill will be paid in accordance with Item 401.

Concrete end treatments will be paid in conformance with other items on the plans.

- manufacturing plant's designation code, and
- date manufactured.

3.3. **Excavation.** Excavate in accordance with Item 400.

Provide enough trench width for the pipe installation to ensure adequate working room to properly and safely place and compact materials placed under haunches of the pipe and other embedment materials. Provide space between the pipe and trench wall that is greater than that of the compaction equipment used.

If ground water is encountered, de-water the trench before placing and backfilling the pipe. However, restrain pipe to maintain elevation and alignment if water exists in trench when allowed by the Engineer for wet placement.

Maintain trench shoring system above pipe haunch zone to not disturb during shoring removal. Correct excavation and backfill if disturbed to reestablish the integrity of the bedding and backfill specified herein.

When using flowable backfill, the minimum allowable trench width is the pipe outside diameter plus 12 in.

When using a granular or a cement stabilized backfill, the minimum allowable trench width is specified in Table 1.

Table 1
Minimum Trench Width (Granular and Cement Stabilized Backfill

Nominal Pipe Diameter (in.)	Minimum Trench Width (in.)
18	39
24	48
36	66
42	75
48	84

3.4. **Installing Pipe in Embankment.** If any portion of the pipe projects above the existing ground line, construct an embankment as shown on the plans or as directed, for a minimum distance outside each side of the pipe location of five times the diameter and to a minimum elevation of 2 ft. above the top of the pipe. Excavate the trench to a width as specified in Section 3.3., "Excavation."

3.5. **Bedding.** Bed the pipe in a foundation of cohesionless material, such as sand, crushed stone, or pea gravel, with a maximum allowable size of 3/8 in. Provide bedding with 4 in. minimum thickness unless subgrade contains large rocks in which increase to minimum of 6 in. Compact the bedding except the width of one third the width of pipe diameter directly under the centerline of the pipe – leave this region loose (uncompacted).

3.6. **Handling and Storing Pipe.** Store pipe above ground on adequate blocking. Always keep pipe clean and fully drained during storage. Provide proper equipment for hoisting and lowering the pipe into the trench without damaging the pipe or disturbing the bedding or the walls of the trench. Any protective covering of gaskets should remain until the pipe is ready for installation.

3.7. **Laying Pipe.** Unless otherwise authorized, start laying pipe on the bedding at the outlet end with the separate sections firmly joined together. Hold and lower sections of pipe into the trench without damaging the pipe or disturbing the bedding or the sides of the trench. Remove and re-lay any pipe that is not in alignment or that shows excessive settlement after laying, at no expense to the Department.

Lay multiple installation of thermoplastic pipe with the centerlines of the individual barrels parallel. Unless otherwise shown on the plans, maintain the clear distances between outer surfaces of adjacent pipes shown in Table 2:

Table 2
Minimum Clear Distance Between Pipes

Nominal Pipe Diameter (in.)	Min. Clear Distance Between Pipes (in.)
18	14
24	17
30	20
36	23
42	26
48	29

3.8. **Reusing Existing Appurtenances.** When existing appurtenances are specified on the plans for reuse, sever the portion to be reused from the existing culvert and move it to the new position previously prepared, by approved methods.

Provide connections conforming to the requirements for joining sections of pipes as indicated in this Specification or as shown on the plans. Restore any headwalls and any aprons or pipes attached to the headwall that are damaged during moving operations, to their original condition, at no expense to the Department. The Contractor has the option to remove and dispose of the existing headwalls and aprons and construct new headwalls at no expense to the Department, in conformance with the pertinent specifications and design indicated on the plans or as furnished.

3.9. **Pipe Jointing.** Follow pipe manufacturer's installation specifications when joining pipes together. Remove gasket protective film just before joining pipes. Provide suitable protection to the push end of the pipe if force is applied to end of pipe to obtain required overlap. Do not damage pipe during pipe joining operations. At a minimum, achieve the minimum specified overlap of the two pipes within the connection. Do not over join pipes to disrupt flow line inside of pipe. Suitable joints are:

- **Integral Bell and Spigot.** Ensure the bell overlaps a minimum of two corrugations of the spigot end when fully engaged. Provide the spigot end with an O-ring gasket in accordance with ASTM F477.
- **Exterior Bell and Spigot.** Fully weld the bell to the exterior of the pipe and overlap the spigot end so that the flow lines and ends match when fully engaged. Provide the spigot end with an O-ring gasket in accordance with ASTM F477.
- **Split Couplers.** For soil-tight joint connections only. Join pipe with coupling bands covering at least two full corrugations on the ends of each pipe being joined.

3.10. **Sewer Connections and Stub Ends.** Make connections of pipe sewer to existing sewers or sewer appurtenances as shown on the plans or as directed. Mortar or concrete the bottom of the existing structures, if necessary, to eliminate any drainage pockets created by the new connection. Where the sewer is connected into existing structures which are to remain in service, restore any damage to the existing structure resulting from making the connections to the satisfaction of the Engineer. Seal stub ends, for connections to future work not shown on the plans, by installing watertight plugs into the free end of the pipe. Include the cost for the above at cost of the pipe.

3.11. **Backfilling.** Backfill from the pipe bedding up to 12 in. above the top of the pipe to provide necessary structural support to the pipe and control pipe deflection. Take care when placing and compacting the backfill material to not damage pipe. Adjust backfilling operations if pipe is being moved out of alignment, is causing pipe distortion, or disrupting joint tightness. Remove backfill around problem areas and restore pipe section before continuing to backfill. Provide uniform backfill material and uniform compacted density throughout the length of the pipe, to avoid unequal pressure. Use care to ensure proper backfill under the pipe, in the haunch zone.

Provide type of backfill as shown on the plans. When granular material is specified, provide backfill consisting of hard, durable, clean granular material that is free of organic matter, clay lumps, and other deleterious matter. Provide backfill meeting the gradation requirements shown in Table 3.

Table 3
Gradation Requirements for Granular Backfill Material

Sieve Size	Percent Retained (Cumulative)
1 in.	0-5
7/8 in.	0-35
1/2 in.	0-75
3/8 in.	0-95
No. 4	35-100
No. 10	60-100
No. 200	90-100

Place the backfill in accordance with Item 400 or Item 401 and as supplemented below.

- **Granular Backfill.** Place in uniform layers a minimum 6 in. deep (loose measurement), wet if required, and thoroughly compact it between adjacent structures and between the structure and the sides of the trench. Hand place, if necessary, under the pipe in haunch zone to ensure complete filling and support. Limit compaction to hand-operated tamping equipment to compact backfill within the region 12 in. either side of the pipe and between pipes. Place filter fabric between the native soil and the backfill unless otherwise shown on the plans. Use filter fabric conforming to the requirements of DMS-6200, "Filter Fabric," Type 1.
- **Cement Stabilize Backfill.** Place and compact to completely fill all voids. Hand place, if necessary, under the pipe in haunch zone to ensure complete filling and support.
- **Flowable Backfill.** Place in a manner that will not result in uplift of the pipe or restrain pipe enough to maintain constant grade flowline at required elevation. Place across the entire width of the trench and maintain a minimum depth of 12 in. above the pipe. Wait a minimum of 24 hr. before backfilling the remaining portion of the trench with other backfill material in accordance with Item 400, unless strength information for the flowable fill is available and strength exceeds 100 psi compressive strength.

Inspect inside periphery of pipe for local or unequal deformation caused by improper construction methods during backfilling. Stop work and address backfilling technique if measured deflection of pipe exceeds 5% or there are other issues found effecting quality of pipe installation.

To validate pipe installation methods, perform an initial quality control inspection after first installation of each size of pipe is completed on the project. Notify the Engineer when this inspection takes place.

3.12. **Protecting the Pipe.** Unless otherwise shown on the plans or permitted in writing, do not use heavy earth-moving equipment over the structure until a minimum of 4 ft. of permanent or temporary compacted fill is placed over the top of the structure.

4. INSPECTION OR ACCEPTANCE

4.1. **Inspection.** Visually inspect the pipes for damage, deflection (out of roundness), joint tightness, evidence of soil intrusion, and vertical alignment (ponding). If the pipe run is 30 ft. or less in length, not under a public roadway, and the initial visual inspection did not indicate any deflection or other deficiencies, additional testing described below will be waived, unless otherwise noted. Provide high intensity lights, laser distant measuring devices, and other equipment to facilitate visual inspection.

Perform final inspection a minimum of 30 days after the backfill has been completed or earlier as needed to allow roadway surfacing when approved. Have two test mandrels available for each size of pipe. Size mandrels based on the manufacturer's average inside diameter and field verified based on a proving ring. Provide metal mandrels with at least nine fixed fins evenly distributed around the circumference. Pull mandrel sized at 95% the diameter of the pipe through the entire length. If the 95% mandrel cannot be pulled entirely through, pull a mandrel 92.5% the pipe diameter through the pipe. Additionally, if the 95% mandrel cannot be pulled entirely through the pipe or there is a substantial disruption in ease of mandrel movement through the pipe, visually inspect installed pipe utilizing a remote operated camera mounted on vehicle or sled able to

move through the pipe. Check for joint separation, cracks, tears, buckling, deflection, and out of roundness, evidence of soil intrusion and vertical alignment (ponding water).

Notify the Engineer when inspections are to occur. The Department will provide inspection form to be used. Document process and findings and return form to the Engineer.

4.2. **Remediation.** Develop a plan to address all deficiencies of joint separation, damage, evidence of soil intrusion, vertical alignment, and where pipe deflection exceeds 5% of the nominal diameter.

- **Joints.** Remediate pipe showing evidence of crushing at the joints. Note differential movement, improper joint sealing, movement or settlement of pipe sections, and leakage in the inspection report. Remediate joint separation of greater than 1 in. Repair or replace pipe sections where soil migration through the joint is occurring.
- **Cracks or Tears.** Remediate cracks or splits in the interior wall of the pipe. Use remediation methods in conformance with recommendations of the pipe manufacturer and accepted and authorized by the Engineer.
- **Buckling, bulging, and racking.** Note in the inspection report flat spots or dents at the crown, sides, or fowline of the pipe due to racking. Note areas of wall buckling and bulging in the inspection report. The Engineer will determine if corrective action is necessary.
- **Deflection.** Where pipe deflection exceeds 5% of the nominal diameter, submit to the Engineer for review and approval an evaluation utilizing a Professional Engineer taking into consideration the severity of the deflection, structural integrity, environmental conditions, and the design service life of the pipe. Remediate or replace pipe where the evaluation finds the deflection could be problematic or where pipe deflection exceeds 7.5% of the nominal diameter.

5. END TREATMENT

Install concrete end sections per requirements of the plans. End section must include concrete headwall, wings, and floor. Reference the following for this work:

- Item 466, "Headwalls and Wingwalls"
- Item 467, "Safety End Treatment."

6. MEASUREMENT

This Item will be measured by the foot. Measurement will be made between the ends of the pipe barrel along the flow line, not including safety end treatments. Measurement of spurs, branches, or connections to existing pipe will be made from the intersection of the flow line with the outside surface of the pipe into which it connects.

Where inlets, headwalls, catch basins, manholes, junction chambers, or other structures are included in lines of pipe, the length of pipe lying into the structure wall will be included for measurement, but no other portion of the structure length or width will be included.

For multiple pipes, the measured length will be the sum of the lengths of the barrels.

This is a plans quantity measurement item. The quantity to be paid for is the quantity shown in the proposal unless modified by Article 9.2., "Plans Quantity Measurement." Additional measurements or calculations will be made if adjustments of quantities are required.

7. PAYMENT

The work performed and materials furnished, in accordance with this Item and measured as provided under "Measurement," will be paid for at the unit price bid for "Thermoplastic Pipe" of the size and type specified. This price is "full compensation for furnishing, hauling, placing, and joining pipes; connecting to new or

DMS-4710
Thermoplastic Pipes, Joints, and Fittings

Effective Date: November 2022

1. DESCRIPTION

This Specification governs for the product evaluation, manufacturer, and material requirements for thermoplastic materials. Thermoplastic pipes, joints, and, fittings including High Density Polyethylene (HDPE) and Polypropylene (PE) materials, are intended for use as pipe culverts and drains up to 48 in. in diameter with up to 20 ft. of fill.

2. MATERIAL PRODUCER LIST

The Department maintains a Material Producer List (MPL) of thermoplastic pipes, joints, and fittings manufacturing plants and materials conforming to the requirements of this Specification. Thermoplastic materials used on Department projects must be produced by manufacturing plants listed on the approved MPL. Thermoplastic materials listed on the approved MPL, for listed manufacturers, will be considered for use subject to the conditions of each project.

3. QUALIFICATION PROCEDURE

3.1. **Qualification Request.** Thermoplastic materials will be evaluated based on the material type, design, durability and service life methodology, test results, and construction and installation methods. Submit a request for evaluation under DMS-4710 to DMS_PrequalBids@txdot.gov.

Include the following material information in the request:

- company name,
- physical and mailing addresses,
- contact person, phone number, and email address,
- an overview of the system including system theory and development history,
- durability (corrosion, construction damage, environmental) design procedures and service life for each thermoplastic material type,
- detailed construction and installation manual,
- maximum fill height,
- case histories of the use of the pipe on highway projects, and
- copy of manufacturer's current certificate of compliance for AASHTO's National Transportation Product Evaluation Program (NTPEP) Committee Work Plan for Evaluation of Manufacturers of the submitted thermoplastic drainage materials.

3.2. **Evaluation.** The Department will review the submittal and request clarification or additional information as necessary.

3.2.1. **Qualification.** If approved for Department use, the Department will add the material to the MPL for consideration of use subject to the project conditions.

Report any changes in the composition or manufacturing process of any material to AASHTO-NTPEP and the Department. Changes in composition or manufacturing process may require a re-evaluation of the performance and resubmittal of a NTPEP certificate of compliance before use on Department projects. The

Department representatives reserves the right to conduct whatever tests it deems necessary to identify a qualified material and determine if there has been a change in the composition, manufacturing process, or quality that may affect the qualified material's durability or performance. In case of variance, the Department representatives' tests will govern.

3.2.2. **Failure.** Manufacturers not qualified under this Specification may not furnish materials for use on Department projects.

Manufacturers failing to qualify may submit a request for re-evaluation after 6 mo. have elapsed from the date of the original request. The Department may modify this time limit at its discretion. In the request for re-evaluation, document the cause of the failure issue and corrective action taken.

3.3. **Periodic Evaluation.** The Department representatives reserves the right to conduct random sampling and testing of material or product to verify performance and Specification compliance and to perform random audits of the manufacturing plant including all documentation. Department representatives may sample material from the manufacturing plant and the project site.

Failure of materials to comply with the requirements of this Specification as a result of periodic evaluation may be cause for removal of those materials from the MPL. In case of variance, the Department's representatives' tests will govern.

3.4. **Disqualification.** Causes for disqualification and removal from the MPL may include, but are not limited to:

- failure to maintain the applicable AASHTO-NTPEP certificate of compliance,
- failure to report any change in material composition or manufacturing process to AASHTO-NTPEP,
- repetitive poor quality and workmanship of the material or repetitive poor installation,
- failure to provide safe access or allow Department representatives to perform any unannounced inspections or audit of any manufacturing process, documentation, or material produced,
- falsification of or incomplete documentation, or
- furnishing material to Department projects that fails to meet specifications.

The Department will remove disqualified producers from the MPL and will not allow submission of material for re-qualification for 6 mo., at the discretion of the Department.

All previously produced material assigned to the Department will be subject to review and removal from Department assigned inventory. For the remaining material needed on active projects, the Contractor or the disqualified manufacturer must choose another Department-approved manufacturer currently listed on the MPL for the specific material specified to supply the material. The Contractor is responsible for any delays, product price increases, or other costs related to the manufacture disqualification.

Re-Qualification. Once the disqualification period established by the Department has elapsed, producers disqualified and removed from the MPL may begin the re-qualification process by submitting a request in accordance with Section 3.1., "Qualification Request," including additional documentation identifying the cause of the problem and corrective action taken. The re-qualification process will then follow all subsequent Sections of Article 3, "Qualification Procedure."

4. MATERIAL REQUIREMENTS

4.1. **High Density Polyethylene (HDPE) Pipe, Joints, and Fittings.**

4.1.1. **Manufacturer.** Manufacturers of HDPE drainage pipe must comply with the AASHTO-NTPEP Committee Work Plan for Evaluation of HDPE Thermoplastic Drainage Pipe Manufacturers. Qualified manufacturers must also maintain and submit a current AASHTO-NTPEP certificate of compliance.

4.1.2. **General.** Provide HDPE materials meeting the requirements of AASHTO M 294.

4.1.3. **Raw Materials.** Provide HDPE materials manufactured from virgin polyethylene (PE) resin compounds, conforming to the requirements of cell class 435400C as defined and described in ASTM D3350, except that the maximum allowable carbon black content is 4%. Use PE resin compound meeting the slow-crack-growth resistance according to the NCLS test set forth in AASHTO M 294.

4.1.4. **Designation Type.** For HDPE pipe used in gravity flow drainage applications, provide Type S (outer corrugated wall with smooth inner liner).

4.1.5. **Section Properties.** Provide the minimum wall thickness of the inner walls of Type S pipe as specified in AASHTO M 294, Section 7.2.2. Meet the pipe stiffness at 5% deflection requirement as specified in AASHTO M 294, Section 7.4. The minimum section properties must meet the 75-yr. design life requirements in the AASHTO LRFD Bridge Design Specifications, Section 12.

4.2. **Polypropylene Pipe, Joints, and Fittings.**

4.2.1. **Manufacturer.** Manufacturers of polypropylene drainage materials must comply with the AASHTO-NTPEP Committee Work Plan for Evaluation of Polypropylene Drainage Pipe Manufacturers. Qualified manufacturers must also maintain and submit a current AASHTO-NTPEP certificate of compliance.

4.2.2. **General.** Provide polypropylene materials meeting the requirements of AASHTO M 330.

4.2.3. **Raw Materials.** Provide polypropylene compounds used to manufacture the materials that meet the minimum properties of AASHTO M 330, Section 6.1.1.

4.2.4. **Designation Type.** For polypropylene pipe used in gravity flow drainage applications, provide Type S (outer corrugated wall with smooth inner liner).

4.2.5. **Section Properties.** Provide the minimum wall thickness of the inner walls of Type S pipe as specified in AASHTO M 330, Section 7.2.2. Meet the pipe stiffness at 5% deflection requirement as specified in AASHTO M 330, Section 7.4. The minimum section properties must meet the 75-yr. design life requirements in the AASHTO LRFD Bridge Design Specifications, Section 12.

4.3. **Joints and Fittings.**

4.3.1. **General. Provide joints and fittings meeting the following requirements:**

- **Integral Bell and Spigot.** Ensure the bell overlaps a minimum of two corrugations of the spigot end when fully engaged. Provide the spigot end with an O-ring gasket in accordance with ASTM F477.
- **Exterior Bell and Spigot.** Fully weld the bell to the exterior of the pipe and overlap the spigot end so that the flow lines and ends match when fully engaged. Provide the spigot end with an O-ring gasket in accordance with ASTM F477.
- **Split Couplers.** For soil-tight joint connections only. Join pipe with coupling bands covering at least two full corrugations on the ends of each pipe being joined.

4.3.2. **Definitions.** Joint and fitting type definitions are the following:

- **Soil-tight Joints.** Joints meeting the definition in AASHTO *Standard Specifications for Highway Bridges*, Section 26.4.2.4.
- **Watertight Joints.** Joints meeting the requirements of ASTM D3212.

4.4. **Marking.** Furnish pipe clearly marked at maximum 10 ft. intervals and clearly mark all fittings and couplings with:

- manufacturer's name or trademark,
- nominal size,
- specification designation (i.e., AASHTO M 294 or AASHTO M 330),

- manufacturing plant's designation code, and
- date manufactured.

4.5. **Documentation.** Include a certificate of compliance with each shipment. Provide a certificate including the following information: manufacturing plant, date manufactured, pipe dimensions, pipe stiffness, pipe flattening, brittleness, ASTM resin cell classification, and workmanship.

THIS DOCUMENT HAS BEEN PRODUCED FROM MATERIAL THAT WAS STORED AND/OR TRANSMITTED ELECTRONICALLY AND MAY HAVE BEEN INADVERTENTLY ALTERED. RELY ONLY ON FINAL HARDCOPY MATERIALS BEARING THE CONSULTANT'S ORIGINAL SIGNATURE AND SEAL.

Date: Sep 24, 2024, 4:06pm User ID: tstephens
File: H:\Projects\51118\06\Phase 3\03 Construction Documents\Civil\DT51118-61.dwg

NO. REVISION DATE

STATE OF TEXAS
JENNIFER C. FRANKLIN
118838
LICENSED
PROFESSIONAL ENGINEER
9.9.24

PAPE-DAWSON ENGINEERS
AUSTIN | SAN ANTONIO | HOUSTON | FORT WORTH | DALLAS
10801 N MOPAC EXPY, BLDG 3, STE 200 | AUSTIN, TX 78759 | 512.454.8711
TBPE FIRM REGISTRATION #470 | TBPLS FIRM REGISTRATION #10028801

RANCHO DEL CIELO - PHASE 4B
WILLIAMSON COUNTY, TEXAS
DRAINAGE DETAILS 3 OF 3

CITY JOB No.
JOB NO. 51118-61
DATE SEPTEMBER 2024
DESIGNER TS
CHECKED DRAWN CE/JM
SHEET 32 OF 36

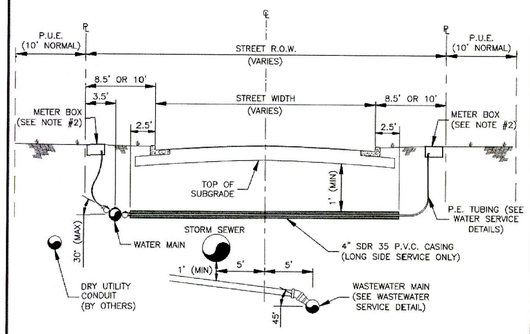

NOTES:

1. REFER TO WATER AND WASTEWATER SERVICE CONNECTION DETAILS FOR SERVICE SPECIFICS.
2. METER BOXES SHALL BE SET AS CLOSE TO R.O.W. (℄) AS POSSIBLE, WITH NO PART OF BOX LOCATED WITHIN P.U.E.
3. WASTEWATER SERVICE LATERALS SHALL BE SET AS CLOSE TO R.O.W. (℄) AS POSSIBLE, WITH NO PART OF THE CLEANOUT STACK LOCATED WITHIN THE P.U.E.
4. WATER AND WASTEWATER SERVICE CONNECTIONS SHALL BE LOCATED ON OPPOSING SIDES OF RESIDENTIAL LOTS WHEREVER POSSIBLE.
5. WATER MAINS SHALL BE LOCATED ON THE HIGH SIDE OF THE STREET WHEREVER POSSIBLE.

Scale: NTS Date Issued: 10/17/22	SONTERRA MUNICIPAL UTILITY DISTRICT JARRELL, TEXAS	
SONTERRA	TYPICAL UTILITY ASSIGNMENT DETAIL	STANDARD DETAIL G-01

NON-PAVED SURFACE:

(A) PROVIDE 4" OF TOPSOIL AND REVEGETATE

(B) PROVIDE COMPACTED BACKFILL IN SITU TRENCH MATERIAL FREE OF ROCK AND CLODS GREATER THAN 4", COMPACTED IN 6" LIFTS, TO 95%

PROPOSED PAVED SURFACE:

SUBGRADE PREP, FLEXIBLE BASE AND H.M.A.C. PER PAVEMENT PLANS, UNDER SEPARATE PROCEDURE

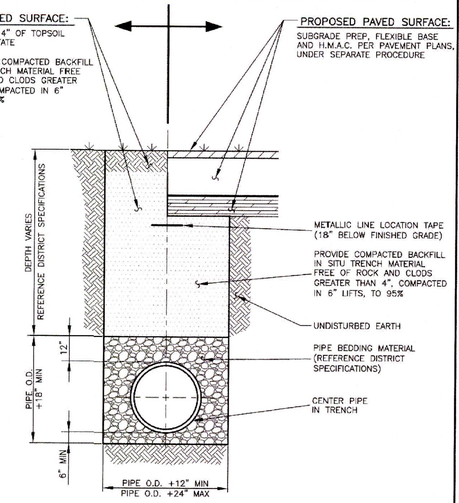

NOTES:

1. ALL TRENCHING AND TRENCH SAFETY SHALL COMPLY WITH APPLICABLE FEDERAL, STATE AND LOCAL REGULATIONS.
2. DETECTOR TAPE TO BE LABELED "WATER", "GRAVITY SEWER", OR PRESSURIZED WASTEWATER" AS APPROPRIATE.

Scale: NTS Date Issued: 10/17/22	SONTERRA MUNICIPAL UTILITY DISTRICT JARRELL, TEXAS	
SONTERRA	WATER AND WASTEWATER MAIN BEDDING AND SURFACE REPAIR DETAIL	STANDARD DETAIL G-02

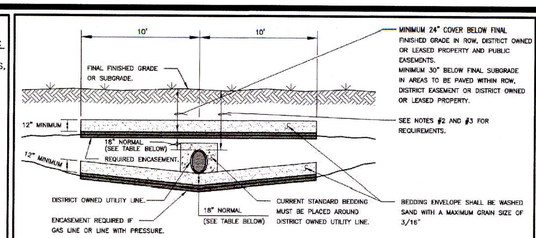

NOTE: NORMALLY, CROSSINGS GO UNDER DISTRICT OWNED LINES WITH LESS THAN 60" OF COVER.

UTILITY MINIMUM CLEARANCE TABLE

	DISTRICT OWNED LINE SIZE	CROSSING (AS NEAR 90° AS POSSIBLE)	PARALLEL ROUTES
POTABLE WATERLINES	LESS THAN ~ 6"	12"	36"
	6" ~ 36"	18"	48"
	LARGER	24"	72"
RECYCLE AND WASTEWATER LINES	LESS THAN ~ 6"	12"	36"
	6" ~ 36"	18"	48"
	LARGER	24"	60"
STORMWATER LINES	LESS THAN ~ 18"	12"	24"
	18" ~ 60"	18"	36"
	LARGER	24"	60"

NOTES:

1. ALL TRENCH SAFETY SHALL COMPLY WITH APPLICABLE FEDERAL, STATE AND LOCAL REGULATIONS.
2. AN ENCASED (SEE NOTE #7) UTILITY LINE/CLUSTER WITH SAND BEDDING, WILL BE ALLOWED TO CROSS OVER A DISTRICT OWNED UTILITY LINE THAT HAS 60" OF COVER OR MORE, PROVIDED THERE IS COMPLIANCE WITH THE CLEARANCE, INSTALLATION AND COVER FROM FINAL SURFACE GRADE SHOWN ON THIS DETAIL. CLEARANCE STANDARDS CAN BE FOUND IN THE UTILITY MINIMUM CLEARANCE TABLE SHOWN ON THIS SHEET AND MINIMUM COVER IS SHOWN ON THE DETAIL SKETCH FOR EACH TYPE OF TRENCH (IN UNPAVED AREAS, IN EXISTING PAVEMENT AND IN AREAS WHERE PAVEMENT IS PROPOSED).
3. IF THE DISTRICT LINE IS LARGE (36"+ POTABLE WATERLINE, RECYCLE LINE OR WASTEWATER LINE, 60"+ STORMWATER LINE) AND/OR HAS LESS THAN 60" OF COVER WITH SPECIAL SITE CONDITIONS, DETAILED PLANS WITH WRITTEN JUSTIFICATION FOR CROSSING OVER A PROPOSED OR EXISTING DISTRICT OWNED LINE, MUST BE SUBMITTED FOR APPROVAL A MINIMUM OF 10 DAYS BEFORE PROPOSED INSTALLATION.
4. NO ENCASEMENT (SAND BEDDING ONLY) IS REQUIRED WHERE THE UTILITY CROSSES UNDER THE DISTRICT OWNED UTILITY LINE, EXCEPT FOR A GAS LINE, OR LINE WITH PRESSURE, WHICH MUST BE ENCASED. CLEARANCE STANDARDS COMPLIANCE REQUIRED.
5. WHERE THERE IS KNOWN GROUND WATER, PLANS MUST BE SUBMITTED, THAT SHOW AN ACCEPTABLE CONTROL OF THE WET CONDITION.
6. ENCASEMENT IN THESE CROSSINGS, MUST BE: SCH. 40 STEEL OR SCH. 80 PVC OR GREATER IN ADDITION TO THE CONDUIT ON ELECTRICAL LINES WITH MORE THAN 120V TO GROUND, ALL GAS LINES, ALL FIBER OPTIC CABLES AND ALL TELEPHONE CABLES WITH MORE THAN 100 PRS.

Scale: NTS Date Issued: 10/17/22	SONTERRA MUNICIPAL UTILITY DISTRICT JARRELL, TEXAS	
SONTERRA	UTILITY CROSSING INSTALLATION DETAIL	STANDARD DETAIL G-03

SERVICE CONNECTION MATERIAL LIST:

A. SERVICE CLAMP REQUIRED.
B. 1" CORPORATION STOP – SERVICE PIPE OUTLET.
C. 1" SERVICE PIPE.
D. LOCKING ANGLE METER STOP; SERVICE PIPE INLET X SWIVEL COUPLING NUT OUTLET:
- FOR 5/8" AND 3/4" METERS: 1" X 3/4"
- FOR 1" METERS: 1" X 1"

E. PLASTIC RECTANGULAR METER BOX. (SEE TABLE BELOW)
F. PIPE CASING WHERE APPLICABLE. (AS PER DETAIL G-01)

METER INSTALLATION MATERIAL LIST:

G. WATER METER, CENTERED IN BOX. (SEE TABLE BELOW)
H. WATER METER COUPLING; MALE I.P.T. X SWIVEL COUPLING NUT:
- FOR 5/8" AND 3/4" METERS: 3/4" X 8 1/2" LONG.
- FOR 1" METERS: LENGTH OF PIPE TO BE DETERMINED BY CONTRACTOR. EXTEND PIPE TO 4"–6" OUTSIDE OF METER BOX.

I. BRONZE GATE VALVE: NON-RISING STEM (3/4" OR 1") FEMALE I.P.T. (PROPERTY OWNERS CUT-OFF OUTSIDE METER BOX IN SEPARATE VALVE CAN WITH LID).
J. 3/4" OR 1" PIPE MEETING LOCAL PLUMBING CODE REQUIREMENTS.

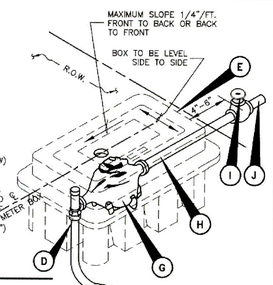

NOTES:

1. SERVICE PIPE SHALL BE 200 PSI BLACK COLORED POLYETHYLENE HAVING A DIMENSION RATIO OF 9 (DR9).
2. SERVICE SADDLES SHALL BE WRAPPED COMPLETELY WITH 8 MIL. POLYETHYLENE FILM.
3. TOP OF BOXES SHALL BE 1" ABOVE FINISHED GRADE.
4. ALL FITTINGS, PIPING, AND TUBING SHALL BE INSTALLED IN ACCORDANCE WITH MANUFACTURER'S RECOMMENDATIONS AND LOCAL PLUMBING CODE.
5. AXIS OF METER ASSEMBLY (LINE THROUGH METER STOP, METER, PIPING AND OWNERS CUTOFF) SHALL BE 10" BELOW TOP OF BOX.
6. SLOTS PROVIDED IN METER BOX TO ACCOMODATE PIPING INTO AND OUT OF BOX, SHALL NOT BE MODIFIED.
7. LOCATION OF METER BOXES SHALL BE SUBJECT TO THE APPROVAL OF THE DISTRICT.

PART NUMBER	SERIES	SIZE	HEIGHT	WIDTH	LENGTH
DFW36C–BODY*	36C	STANDARD	12–1/4"	TOP = 13–3/4"	TOP = 19"
DFW36C–SBSM*	36C	STANDARD	12–1/4"	BASE = 10"	BASE = 18–1/4"
DFW36C–SBSM–LID*	36C	STANDARD	1–3/4"	LID = 10"	LID = 15"

* ROTEC BY DFW PLASTICS INCORPORATED OR APPROVED EQUAL.

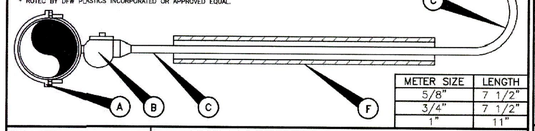

METER SIZE	LENGTH
5/8"	7 1/2"
3/4"	7 1/2"
1"	11"

Scale: NTS Date Issued: 10/17/22	SONTERRA MUNICIPAL UTILITY DISTRICT JARRELL, TEXAS	
SONTERRA	SINGLE 5/8", 3/4", OR 1" WATER METER DETAIL	STANDARD DETAIL W-01

SERVICE CONNECTION MATERIAL LIST:

A. SERVICE CLAMP REQUIRED.
B. 1 1/2" CORPORATION STOP (TYPICAL) – SERVICE PIPE OUTLET.
C. 1 1/2" SERVICE PIPE (TYPICAL).
D. BRANCH CONNECTION: 1 1/2" OR 2" SERVICE PIPE INLET AND 2 3/4" MALE I.P.T. OUTLETS 7 1/2" O.C.
E. 3/4" LOCKING ANGLE METER STOP; FEMALE I.P.T. INLET AND SWIVEL COUPLING NUT OUTLET.
F. PLASTIC RECTANGULAR METER BOX. (SEE TABLE BELOW)
G. PIPE CASING WHERE APPLICABLE. (AS PER DETAIL G-01)

METER INSTALLATION MATERIAL LIST

H. WATER METERS, CENTERED IN BOX. (SEE TABLE BELOW)
I. WATER METER COUPLING; MALE I.P.T. X SWIVEL COUPLING NUT.
- LENGTH OF PIPE TO BE DETERMINED BY CONTRACTOR.
- EXTEND PIPE TO 4"–6" OUTSIDE OF METER BOX.

J. BRONZE GATE VALVE: NON-RISING STEM (3/4" OR 1") FEMALE I.P.T. (PROPERTY OWNERS CUT-OFF OUTSIDE METER BOX IN SEPARATE VALVE CAN WITH LID).
K. 3/4" OR 1" PIPE MEETING LOCAL PLUMBING CODE REQUIREMENTS.

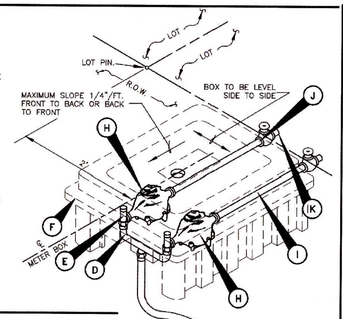

NOTES:

1. SERVICE PIPE SHALL BE 200 PSI BLACK COLORED POLYETHYLENE HAVING A DIMENSION RATIO OF 9 (DR9).
2. SERVICE SADDLES SHALL BE WRAPPED COMPLETELY WITH 8 MIL. POLYETHYLENE FILM.
3. TOP OF BOXES SHALL BE 1" ABOVE FINISHED GRADE.
4. ALL FITTINGS, PIPING AND TUBING SHALL BE INSTALLED IN ACCORDANCE WITH MANUFACTURER'S RECOMMENDATIONS AND LOCAL PLUMBING CODE.
5. AXIS OF METER ASSEMBLY (LINE THROUGH METER STOP, METER, PIPING AND OWNERS CUTOFF) SHALL BE 10" BELOW TOP OF BOX.
6. SLOTS PROVIDED IN METER BOX TO ACCOMODATE PIPING INTO AND OUT OF BOX, SHALL NOT BE MODIFIED.
7. BRANCH CONNECTION AND BOTH ANGLE METER STOPS MUST BE INSTALLED PRIOR TO FIRST METER INSTALLATION EVEN THOUGH THE SECOND PROPERTY MAY NOT BE READY FOR SERVICE.
8. LOCATION OF METER BOXES SHALL BE SUBJECT TO THE APPROVAL OF THE DISTRICT.

PART NUMBER	SERIES	SIZE	HEIGHT	WIDTH	LENGTH
DFW38C–14–BODY*	38C	LARGE	14–1/4"	TOP = 21–1/4"	TOP = 33"
DFW38C–14–SBSM*	38C	LARGE	14–1/4"	BASE = 17–1/4"	BASE = 18"
DFW38C–SBSM–LID*	38C	LARGE	2"	LID = 17"	LID = 18"

* ROTEC BY DFW PLASTICS INCORPORATED OR APPROVED EQUAL.

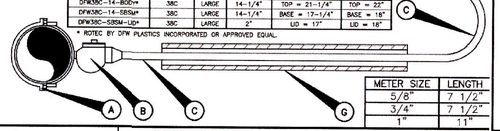

METER SIZE	LENGTH
5/8"	7 1/2"
3/4"	7 1/2"
1"	11"

Scale: NTS Date Issued: 10/17/22	SONTERRA MUNICIPAL UTILITY DISTRICT JARRELL, TEXAS	
SONTERRA	DUAL 5/8", 3/4", OR 1" WATER METER DETAIL	STANDARD DETAIL W-02

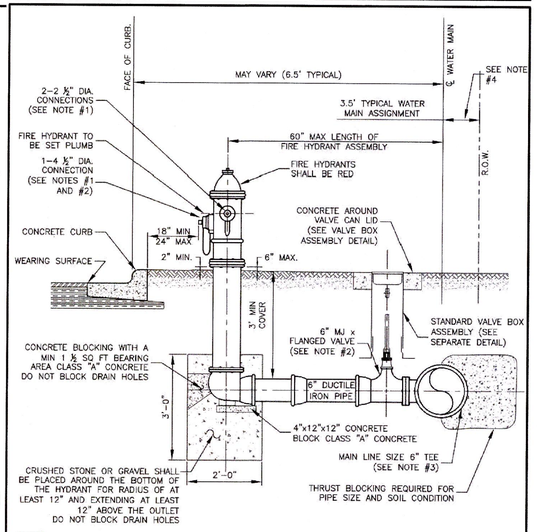

NOTES:

1. THREADS ON OUTLET NOZZLES SHALL BE NATIONAL STANDARD THREAD.
2. CONTRACTOR SHALL FURNISH AND INSTALL 'STORZ' TYPE ADAPTERS ON THE FIRE HYDRANT 4.5" CONNECTION.
3. TEE MAY HAVE FLANGED OUTLET FOR M.J. X FLANGED GATE VALVE OR, ANCHOR (SWIVEL) TEE MAY BE USED WITH M.J. X M.J. GATE VALVE.
4. WATER MAIN MAY BE DEFLECTED TO A 2.5' OFFSET INSIDE R.O.W. AT FIRE HYDRANT LOCATIONS.

Scale: NTS Date Issued: 10/17/22	SONTERRA MUNICIPAL UTILITY DISTRICT JARRELL, TEXAS	
SONTERRA	FIRE HYDRANT ASSEMBLY DETAIL	STANDARD DETAIL W-03

NOTE:
1. CONTRACTOR SHALL FURNISH AND INSTALL STORZ TYPE ADAPTORS ON THE FIRE HYDRANT 4.5-INCH CONNECTIONS (1 PER HYDRANT).

* MODIFIED REFERENCE STREET SECTION & UTILITY ASSIGNMENT & NOTE 1 ON THIS SHEET FOR DETAILS.

NO. REVISION DATE

STATE OF TEXAS
JENNIFER C. FRANKLIN
118838
LICENSED
PROFESSIONAL ENGINEER
9-25-24

PAPE-DAWSON ENGINEERS
AUSTIN | SAN ANTONIO | HOUSTON | FORT WORTH | DALLAS
10801 N MOPAC EXPY, BLDG 3, STE 200 | AUSTIN, TX 78759 | 512.454.8711
TBPE FIRM REGISTRATION #470 | TBPLS FIRM REGISTRATION #10028801

RANCHO DEL CIELO - PHASE 4B
WILLIAMSON COUNTY, TEXAS
WATER DETAILS 1 OF 2

CITY JOB No.
JOB NO. 51118-61
DATE SEPTEMBER 2024
DESIGNER TS
CHECKED DRAWN CE/JM
SHEET 33 OF 36

Date: Sep 24, 2024, 4:07pm User ID: tstephens
File: H:\Projects\511\18\60_Phase 5.301 Construction Documents\Civil\D751118-61.dwg

THIS DOCUMENT WAS BEEN PRODUCED FROM MATERIAL THAT WAS STORED AND/OR TRANSMITTED ELECTRONICALLY AND MAY HAVE BEEN INADVERTENTLY ALTERED. RELY ONLY ON FINAL HARDCOPY MATERIALS BEARING THE CONSULTANT'S ORIGINAL SIGNATURE AND SEAL.

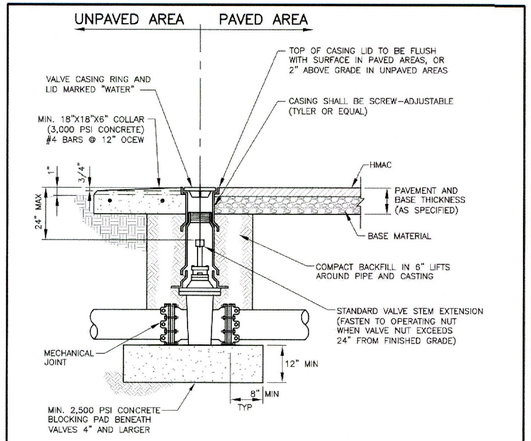

NOTES:

1. VALVE CASING, RING, LID, ETC., SHALL BE DESIGNED FOR HS-20 LOADING WHERE INSTALLED IN PAVED AREAS.

Scale: NTS
Date Issued: 10/17/22

SONTERRA MUNICIPAL UTILITY DISTRICT
JARRELL, TEXAS

SONTERRA

BURIED VALVE, VALVE BOX, & COVER DETAIL

STANDARD DETAIL W-04

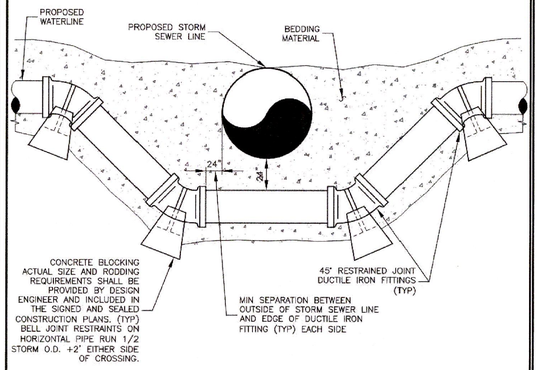

NOTES:

1. ALL DUCTILE IRON FITTINGS SHALL BE WRAPPED WITH MINIMUM 8 MIL POLYETHYLENE (BLACK POLY) AND OPEN ENDS/SEAMS SEALED WITH DUCT TAPE.
2. ALL FITTINGS SHALL HAVE RESTRAINED JOINTS AND BLOCKED WITH CONCRETE BLOCKING.

Scale: NTS
Date Issued: 10/17/22

SONTERRA MUNICIPAL UTILITY DISTRICT
JARRELL, TEXAS

SONTERRA

WATERLINE AND STORM SEWER LINE CROSSING DETAIL

STANDARD DETAIL W-05

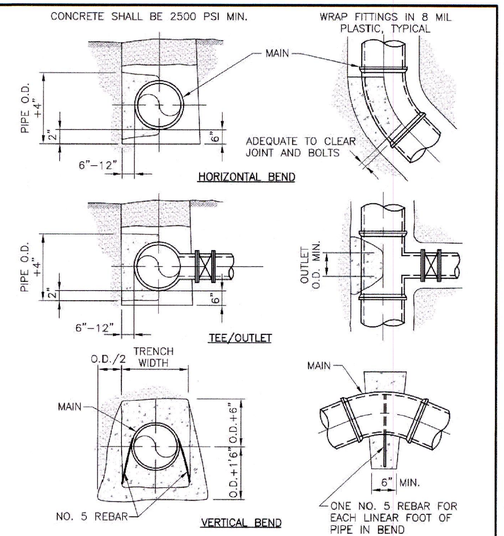

THRUST BLOCK DESIGN AS FOLLOWS:

A. PIPELINE PRESSURE OF 150 PSI (ACTUAL IF HIGHER) +50% SURGE ALLOWANCE

B. MAXIMUM SOIL BEARING PRESSURE

SOIL TYPE	BEARING PRESSURE
ROCK:	4000 LBS/SQ FT
UNDISTURBED SOIL:	2000 LBS/SQ FT
LOOSE SOIL:	1500 LBS/SQ FT

Scale: NTS
Date Issued: 10/17/22

SONTERRA MUNICIPAL UTILITY DISTRICT
JARRELL, TEXAS

SONTERRA

THRUST BLOCK DETAIL

STANDARD DETAIL W-08

NO.	REVISION	DATE

STATE OF TEXAS
JENNIFER C. FRANKLIN
116838
LICENSED
PROFESSIONAL ENGINEER
9-25-24

PAPE-DAWSON ENGINEERS
AUSTIN | SAN ANTONIO | HOUSTON | FORT WORTH | DALLAS
10801 N MOPAC EXPY, BLDG 3, STE 200 | AUSTIN, TX 78759 | 512.454.8711
TBPE FIRM REGISTRATION #470 | TBPLS FIRM REGISTRATION #10028801

RANCHO DEL CIELO - PHASE 4B
WILLIAMSON COUNTY, TEXAS

WATER DETAILS 2 OF 2

CITY JOB No.
JOB NO. 51118-61
DATE SEPTEMBER 2024
DESIGNER TS
CHECKED DRAWN CE/JM
SHEET 34 OF 36

Date: Sep 24, 2024, 4:07pm User ID: tstephens
File: H:\Projects\51118.60\A_Phase 4\50 Construction Documents\Civil\D751118-61.dwg
THIS DOCUMENT HAS BEEN PRODUCED FROM MATERIAL THAT WAS STORED AND/OR TRANSMITTED ELECTRONICALLY AND MAY HAVE BEEN INADVERTENTLY ALTERED. RELY ONLY ON FINAL HARDCOPY MATERIALS BEARING THE CONSULTANT'S ORIGINAL SIGNATURE AND SEAL.

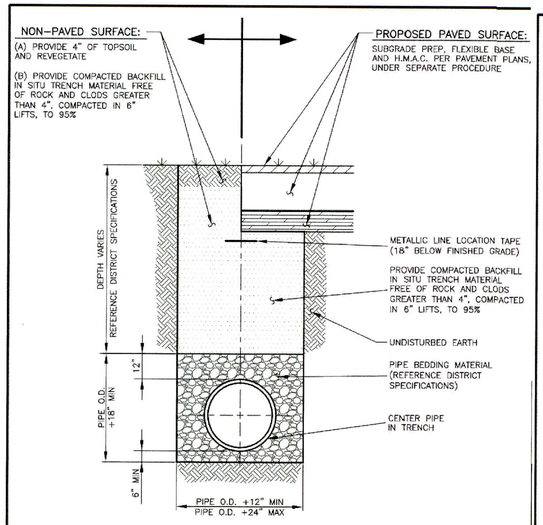

NOTES:

1. ALL TRENCHING AND TRENCH SAFETY SHALL COMPLY WITH APPLICABLE FEDERAL, STATE AND LOCAL REGULATIONS.
2. DETECTOR TAPE TO BE LABELED "WATER", "GRAVITY SEWER", OR PRESSURIZED WASTEWATER" AS APPROPRIATE.

Scale: NTS	SONTERRA MUNICIPAL UTILITY DISTRICT JARRELL, TEXAS	
Date Issued: 10/17/22	WATER AND WASTEWATER MAIN BEDDING AND SURFACE REPAIR DETAIL	STANDARD DETAIL G-02

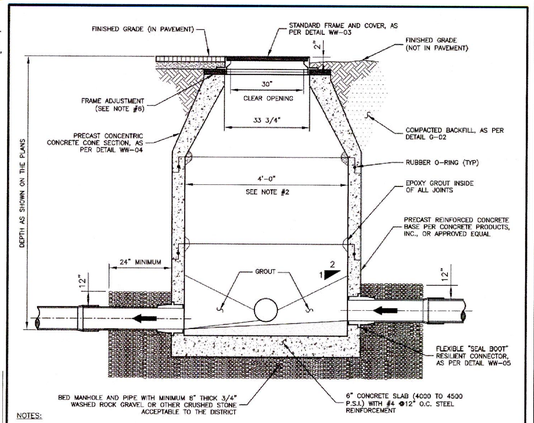

NOTES:

1. REFERENCE DETAIL WW-02 FOR DROP CONNECTIONS GREATER THAN 6 INCHES.
2. SEE CONSTRUCTION PLANS FOR MANHOLE SIZE, LOCATION, CONFIGURATION, TYPE OF TOP SECTION, VENTING REQUIREMENTS, PIPE SIZES AND TYPES. MANHOLES SHALL BE 5' DIAMETER ON LINES LARGER THAN 12" AND/OR DEEPER THAN 16' FROM FINISHED GRADE.
3. MANHOLES SHALL BE PRECAST ASTM C478 BELL AND SPIGOT WITH "O" RING JOINTS.
4. MANHOLES TO BE DESIGNED TO RESIST LATERAL AND VERTICAL SOIL FORCES RESULTING FROM MANHOLE DEPTH. ADDITIONALLY, MANHOLES LOCATED IN PAVEMENT TO BE DESIGNED FOR H20 TRAFFIC LOADING.
5. ALL MANHOLE COVERS SHALL BE BOLTED AND GASKETED WHEN RIM ELEVATION IS LOCATED BELOW FLOODPLAIN OR DRAINAGE WAY ELEVATION.
6. FRAME ADJUSTMENT HEIGHT SHALL CONSIST OF FIVE INCHES (5") MINIMUM TO EIGHTEEN INCHES (18") MAXIMUM. GRADE RINGS SHALL BE GROUTED WITH A NON-SHRINK GROUT INSIDE AND OUTSIDE. PRECAST CONCRETE OR HDPE GRADE RINGS SHALL BE USED.
7. A FLOW CHANNEL SHALL BE CONSTRUCTED INSIDE MANHOLE TO DIRECT INFLUENT INTO THE FLOW STREAM. ALL P.V.C. PIPE SHALL BE REMOVED FROM INVERT.
8. BASE SECTION SHALL BE DESIGNED FOR H20 LOADING, PLUS EARTH LOAD AT 130 PCF.
9. WHERE MANHOLES ARE LOCATED OUTSIDE OF PAVEMENT, ENSURE ADJACENT GRADES PROVIDE POSITIVE DRAINAGE DIRECTED AWAY FROM THE MANHOLE COVER.
10. MANHOLES WITH 12" PIPING OR LARGER SHALL BE COATED WITH RAVEN 405, SPRAYWALL, OR APPROVED EQUAL. COATING SHALL HAVE A UNIFORM THICKNESS OF 124 MILS AND A MINIMUM THICKNESS OF 100 MILS, APPLIED AFTER MANHOLE HAS PASSED VACUUM TEST. IN LIEU OF INTERIOR COATING, NEW PRECAST MANHOLES CONTAINING CONSHIELD WILL BE ACCEPTED PROVIDING THE MANUFACTURER STENCILS "CONSHIELD" ON THE INSIDE AND OUTSIDE OF ALL MANHOLE SECTIONS.

Scale: NTS	SONTERRA MUNICIPAL UTILITY DISTRICT JARRELL, TEXAS	
Date Issued: 10/17/22	PRECAST CONCRETE WASTEWATER MANHOLE DETAIL	STANDARD DETAIL WW-01

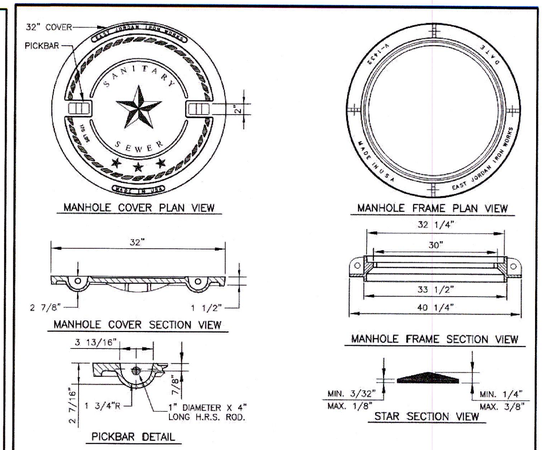

NOTES:

1. COVER AND FRAME SHALL COMPLY WITH STANDARD SPECIFICATIONS FOR DRAINAGE, SEWER, UTILITY AND RELATED CASTINGS: AASHTO DESIGNATION M306-04.
2. MANHOLE COVER AND FRAME ASSEMBLY MANUFACTURED BY EAST JORDAN IRON WORKS, INCORPORATED, OR APPROVED EQUAL.
3. ALL CORNERS AND EDGES SHALL HAVE A 1/16" MINIMUM AND 1/8" MAXIMUM RADIUS.
4. MANHOLE COVERS SHALL BE CAST WITH TWO 1" DIAMETER STEEL PICKBARS.
5. MANHOLE COVER WEIGHT SHALL BE CAST ON BOTH TOP AND BOTTOM OF COVER.
6. MANUFACTURER SHALL CERTIFY THAT EACH MANHOLE COVER MEETS HS-20 LOADING.
7. FILLETS SHALL BE 1/4" RADIUS UNLESS OTHERWISE SPECIFIED.
8. MANUFACTURER SHALL REMOVE EXCESS IRON AND MACHINE FINISH SEATING SURFACES TO NOTED DIMENSIONS.

Scale: NTS	SONTERRA MUNICIPAL UTILITY DISTRICT JARRELL, TEXAS	
Date Issued: 10/17/22	NON-BOLTED WASTEWATER MANHOLE COVER AND FRAME DETAIL	STANDARD DETAIL WW-03

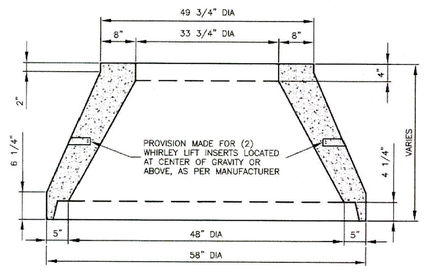

NOTE:

CONCENTRIC CONCRETE CONE SECTION SHALL BE MANUFACTURED USING 4000 TO 4500 P.S.I. CONCRETE, 28 DAY STRENGTH AND IN ACCORDANCE WITH ASTM C478, AS MANUFACTURED BY CONCRETE PRODUCTS, INCORPORATED, OR APPROVED EQUAL.

Scale: NTS	SONTERRA MUNICIPAL UTILITY DISTRICT JARRELL, TEXAS	
Date Issued: 10/17/22	PRECAST 48" CONCENTRIC CONCRETE CONE SECTION DETAIL	STANDARD DETAIL WW-04

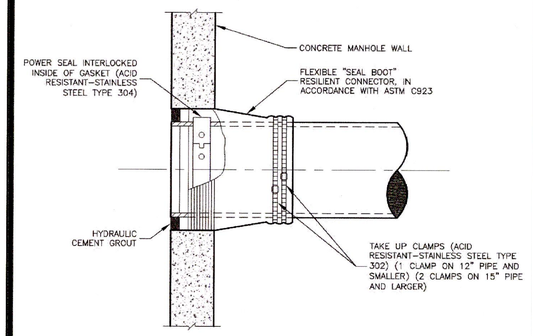

Scale: NTS	SONTERRA MUNICIPAL UTILITY DISTRICT JARRELL, TEXAS	
Date Issued: 10/17/22	FLEXIBLE "SEAL BOOT" RESILIENT CONNECTOR DETAIL	STANDARD DETAIL WW-05

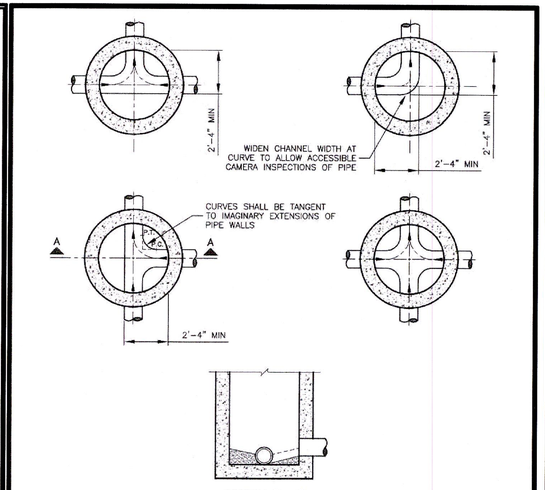

NOTES:

1. MINIMUM DROP FROM INLET TO OUTLET OF MANHOLE IS 0.1 FEET AND MAXIMUM DROP IS 2.5 FEET, UNLESS SPECIAL APPROVAL IS OBTAINED FROM THE CITY OF ROUND ROCK.
2. INVERT CHANNELS TO BE CONSTRUCTED FOR SMOOTH FLOW WITH NO OBSTRUCTIONS.
3. SPILLWAYS SHALL BE CONSTRUCTED BETWEEN PIPES WITH DIFFERENT INVERT ELEVATIONS PROVIDING FOR SMOOTH FLOW.
4. CHANNELS FOR FUTURE CONSTRUCTIONS, SHALL BE CONSTRUCTED WITH PIPE EXTENDING 3' BEYOND EXTERIOR OF MANHOLE WALL, WITH GLUED PLUG.
5. SLOPE MANHOLE BENCH AT 2:1 SLOPE FROM MANHOLE WALL TO CHANNEL.
6. INVERT CHANNEL SHALL BE A MINIMUM OF 1/2 THE DIAMETER OF THE LARGEST PIPE OR FOUR INCHES (4") DEEP.

Scale: NTS	SONTERRA MUNICIPAL UTILITY DISTRICT JARRELL, TEXAS	
Date Issued: 10/17/22	WASTEWATER FLOW PATTERNS FOR INVERT CHANNELS DETAIL	STANDARD DETAIL WW-06

NO.	REVISION	DATE

STATE OF TEXAS
JENNIFER C. FRANKLIN
118838
LICENSED PROFESSIONAL ENGINEER
9-25-24

PAPE-DAWSON ENGINEERS
AUSTIN | SAN ANTONIO | HOUSTON | FORT WORTH | DALLAS
10801 N MOPAC EXPY, BLDG 3, STE 200 | AUSTIN, TX 78759 | 512.454.8711
TBPE FIRM REGISTRATION #470 | TBPLS FIRM REGISTRATION #10028801

RANCHO DEL CIELO - PHASE 4B
WILLIAMSON COUNTY, TEXAS

WASTEWATER DETAILS 1 OF 2

CITY JOB No.
JOB NO. 51118-61
DATE SEPTEMBER 2024
DESIGNER TS
CHECKED DRAWN CE/JM
SHEET 35 OF 36

Date: Sep 24, 2024, 4:07pm User ID: tstephens
File: H:\Projects\51\18\60_Phase 5\301 Construction Documents\Civil\D751118-61.dwg

THIS DOCUMENT HAS BEEN PRODUCED FROM MATERIAL THAT WAS STORED AND/OR TRANSMITTED ELECTRONICALLY AND MAY HAVE BEEN INADVERTENTLY ALTERED. RELY ONLY ON FINAL HARDCOPY MATERIALS BEARING THE CONSULTANT'S ORIGINAL SIGNATURE AND SEAL.

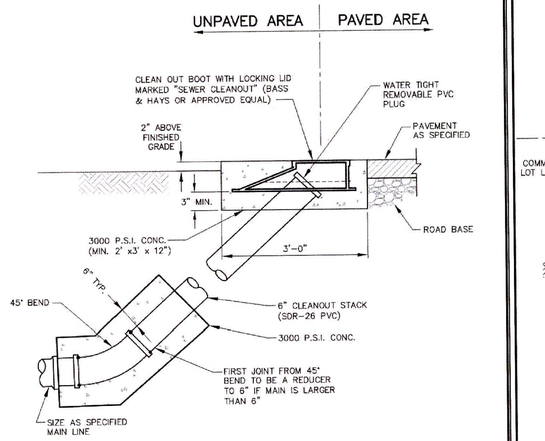

Scale: NTS Date Issued: 10/17/22	SONTERRA MUNICIPAL UTILITY DISTRICT JARRELL, TEXAS	STANDARD DETAIL WW-07
SONTERRA	END OF MAIN WASTEWATER CLEANOUT DETAIL	

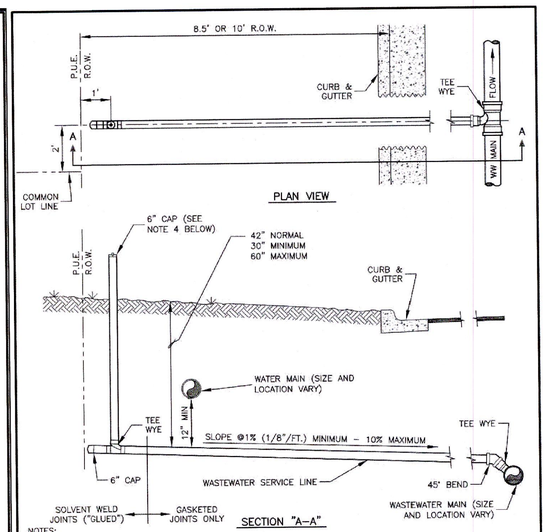

NOTES:

1. ALL PIPE TO BE SDR 26.
2. ALL FITTINGS TO BE SDR 35 WITH GASKETED JOINTS EXCEPT AS NOTED.
3. SERVICE LINES, CLEANOUTS, AND FITTINGS SHALL BE 4" DIAMETER FOR SINGLE RESIDENTIAL SERVICE AND 6" DIAMETER FOR DOUBLE RESIDENTIAL SERVICE.
4. CLEANOUT STACK TO BE INITIALLY SET BY CONTRACTOR AT 24"-36" ABOVE FINISHED GRADE WITH GLUED CAP. FINAL ADJUSTMENT TO 6" ABOVE FINISHED GRADE SHALL OCCUR BY BUILDER WITH THREADED CAP W/FEMALE ADAPTER PRIOR TO ACCEPTANCE OR ISSUANCE OF CERTIFICATE OF OCCUPANCY.

Scale: NTS Date Issued: 10/17/22	SONTERRA MUNICIPAL UTILITY DISTRICT JARRELL, TEXAS	STANDARD DETAIL WW-08
SONTERRA	WASTEWATER SERVICE DETAIL	

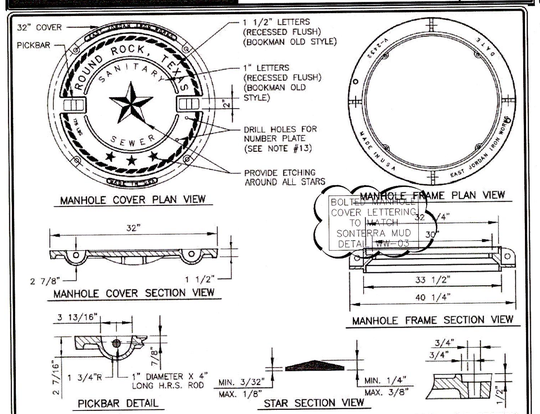

NOTES:

1. COVER AND FRAME SHALL COMPLY WITH STANDARD SPECIFICATIONS FOR DRAINAGE, SEWER, UTILITY AND RELATED CASTINGS: AASHTO DESIGNATION M306-04.
2. MANHOLE COVER SHALL BE MODEL NUMBER: V-2432-3 (PRODUCT NUMBER: 42432033), AS MANUFACTURED BY EAST JORDAN IRON WORKS INCORPORATED, OR APPROVED EQUAL.
3. MANHOLE FRAME SHALL BE MODEL NUMBER: V-2432 (PRODUCT NUMBER: 42432010), AS MANUFACTURED BY EAST JORDAN IRON WORKS INCORPORATED, OR APPROVED EQUAL.
4. MANHOLE COVER AND FRAME ASSEMBLY, IF ORDERED AS A SET, SHALL BE MODEL NUMBER: V-2432 (PRODUCT NUMBER: 42432073), AS MANUFACTURED BY EAST JORDAN IRON WORKS INCORPORATED, OR APPROVED EQUAL.
5. ALL CORNERS AND EDGES SHALL HAVE A 1/16" MINIMUM AND 1/8" MAXIMUM RADIUS.
6. MANHOLE COVERS SHALL BE CAST WITH TWO 1" DIAMETER STEEL PICKBARS.
7. MANHOLE COVER WEIGHT SHALL BE 175 LBS. FOR DUCTILE IRON. WEIGHT SHALL BE CAST ON BOTH TOP AND BOTTOM OF COVER.
8. MANUFACTURER SHALL CERTIFY THAT EACH MANHOLE COVER MEETS HS-20 LOADING.
9. FILLETS SHALL BE 1/4" RADIUS UNLESS OTHERWISE SPECIFIED.
10. MANUFACTURER SHALL REMOVE EXCESS IRON AND MACHINE FINISH SEATING SURFACES TO NOTED DIMENSIONS.
11. COVER SHALL BE DIPPED IN A WATER-BASED ASPHALTIC COATING, PRIOR TO SHIPMENT FROM FOUNDRY.
12. BOLTS SHALL BE 5/8"-11NC X 2" LONG HEX STAINLESS STEEL WITH WASHER.
13. MANUFACTURER SHALL DRILL 2-3/16" X 1/2" DEEP HOLES FOR A MANHOLE NUMBER PLATE TO BE PROVIDED BY THE CITY OF ROUND ROCK. THE TOP HOLE SHALL BE DRILLED 1" O.C. FROM THE BOTTOM OF THE PICKBAR AND THE BOTTOM HOLE SHALL BE DRILLED 4" O.C. FROM THE TOP HOLE.

RECORD SIGNED COPY ON FILE AT U&ES DEPARTMENT APPROVED 03-01-18 DATE THE ARCHITECT/ENGINEER ASSUMES RESPONSIBILITY FOR THE APPROPRIATE USE OF THIS DETAIL. (NOT TO SCALE)	CITY OF ROUND ROCK MODIFIED BOLTED WASTEWATER MANHOLE COVER AND FRAME DETAIL	DRAWING NO: WW-07 ROUND ROCK TEXAS

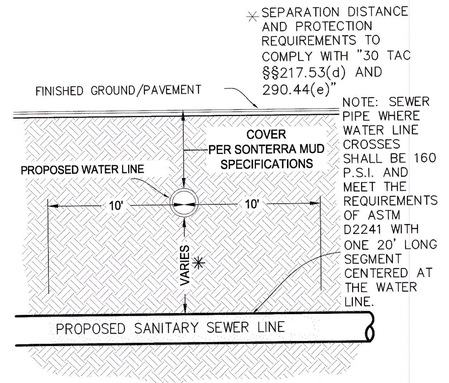

TYPICAL SANITARY SEWER/ WATER CROSSING DETAIL

NOT-TO-SCALE

NO.	REVISION	DATE

STATE OF TEXAS
JENNIFER C. FRANKLIN
118838
LICENSED PROFESSIONAL ENGINEER
9-25-24

PAPE-DAWSON ENGINEERS
AUSTIN | SAN ANTONIO | HOUSTON | FORT WORTH | DALLAS
10801 N MOPAC EXPY, BLDG 3, STE 200 | AUSTIN, TX 78759 | 512.454.8711
TBPE FIRM REGISTRATION #470 | TBPLS FIRM REGISTRATION #10028801

RANCHO DEL CIELO - PHASE 4B
WILLIAMSON COUNTY, TEXAS

WASTEWATER DETAILS 2 OF 2

CITY JOB No.
JOB NO. 51118-61
DATE SEPTEMBER 2024
DESIGNER TS
CHECKED DRAWN CE/JM
SHEET 36 OF 36

THIS DOCUMENT HAS BEEN PRODUCED FROM MATERIAL THAT WAS STORED AND/OR TRANSMITTED ELECTRONICALLY AND MAY HAVE BEEN INADVERTENTLY ALTERED. RELY ONLY ON FINAL HARDCOPY MATERIALS BEARING THE CONSULTANT'S ORIGINAL SIGNATURE AND SEAL.

Date: Sep 24, 2024, 4:07pm User ID: lstephens
File: K:\Projects\51118\600_Phase 5\301 Construction Documents\Civil\D751118-61.dwg

RANCHO DEL CIELO PHASE 4B

SEWAGE COLLECTION SYSTEM APPLICATION (51118-61)

Prepared By:
PAPE-DAWSON CONSULTING ENGINEERS, LLC.
Texas Board of Professional Engineers, Firm Registration # 470
10801 NORTH MOPAC EXPRESSWAY, BUILDING 3 – SUITE 200
AUSTIN, TEXAS 78759
(512) 454-8711



10/9/24

October 2024

PAPE-DAWSON ENGINEERS

Transportation | Water Resources | Land Development | Surveying | Environmental

RANCHO DEL CIELO PHASE 4B

SEWAGE COLLECTION SYSTEM
APPLICATION (51118-61)

October 2024

PAPE-DAWSON ENGINEERS

October 1, 2024

Ms. Lillian Butler
Texas Commission on Environmental Quality (TCEQ)
Region 11
12100 Park 35 Circle, Building A
Austin, Texas 78753

Re: Rancho Del Cielo Phase 4B
Sewage Collection System Application

Dear Ms. Butler:

Please find attached one (1) copies of the Rancho Del Cielo Phase 4B Sewage Collection System Application (SCS). This SCS Application has been prepared to be consistent with the regulations of the Texas Commission on Environmental Quality (30 TAC 213 & 217) and current policies for development over the Edwards Aquifer Recharge Zone.

This SCS Application applies to approximately 1,710 total linear feet of sewer main and service line proposed as part of this project. Please review the plan information for the items it is intended to address. If acceptable, please provide written approval of the plan in order that construction may begin at the earliest opportunity.

Appropriate review fee ($855.00) and fee application are included. If you have any questions or require additional information, please do not hesitate to contact me at your earliest convenience.

Sincerely,
Pape-Dawson Consulting Engineers, LLC.

Michael Fisher, P.E.
Senior Vice President

H:\PROJECTS\511\18\06\308 SCS APPLICATION\REPORT\SCS COVER LETTER.DOCX

Texas Commission on Environmental Quality

Edwards Aquifer Application Cover Page

Our Review of Your Application

The Edwards Aquifer Program staff conducts an administrative and technical review of all applications. The turnaround time for administrative review can be up to 30 days as outlined in 30 TAC 213.4(e). Generally administrative completeness is determined during the intake meeting or within a few days of receipt. The turnaround time for technical review of an administratively complete Edwards Aquifer application is 90 days as outlined in 30 TAC 213.4(e). Please know that the review and approval time is directly impacted by the quality and completeness of the initial application that is received. In order to conduct a timely review, it is imperative that the information provided in an Edwards Aquifer application include final plans, be accurate, complete, and in compliance with 30 TAC 213.

Administrative Review

1. Edwards Aquifer applications must be deemed administratively complete before a technical review can begin. To be considered administratively complete, the application must contain completed forms and attachments, provide the requested information, and meet all the site plan requirements. The submitted application and plan sheets should be final plans. Please submit one full-size set of plan sheets with the original application, and half-size sets with the additional copies.

   To ensure that all applicable documents are included in the application, the program has developed tools to guide you and web pages to provide all forms, checklists, and guidance. Please visit the below website for assistance: http://www.tceq.texas.gov/field/eapp.

2. This Edwards Aquifer Application Cover Page form (certified by the applicant or agent) must be included in the application and brought to the administrative review meeting.

3. Administrative reviews are scheduled with program staff who will conduct the review. Applicants or their authorized agent should call the appropriate regional office, according to the county in which the project is located, to schedule a review. The average meeting time is one hour.

4. In the meeting, the application is examined for administrative completeness. Deficiencies will be noted by staff and emailed or faxed to the applicant and authorized agent at the end of the meeting, or shortly after. Administrative deficiencies will cause the application to be deemed incomplete and returned.

   An appointment should be made to resubmit the application. The application is re-examined to ensure all deficiencies are resolved. The application will only be deemed administratively complete when all administrative deficiencies are addressed.

5. If an application is received by mail, courier service, or otherwise submitted without a review meeting, the administrative review will be conducted within 30 days. The applicant and agent will be contacted with the results of the administrative review. If the application is found to be administratively incomplete, it can be retrieved from the regional office or returned by regular mail. If returned by mail, the regional office may require arrangements for return shipping.

6. If the geologic assessment was completed before October 1, 2004 and the site contains "possibly sensitive" features, the assessment must be updated in accordance with the *Instructions to Geologists* (TCEQ-0585 Instructions).

Technical Review

1. When an application is deemed administratively complete, the technical review period begins. The regional office will distribute copies of the application to the identified affected city, county, and groundwater conservation district whose jurisdiction includes the subject site. These entities and the public have 30 days to provide comments on the application to the regional office. All comments received are reviewed by TCEQ.

2. A site assessment is usually conducted as part of the technical review, to evaluate the geologic assessment and observe existing site conditions. The site must be accessible to our staff. The site boundaries should be

clearly marked, features identified in the geologic assessment should be flagged, roadways marked and the alignment of the Sewage Collection System and manholes should be staked at the time the application is submitted. If the site is not marked the application may be returned.

3. We evaluate the application for technical completeness and contact the applicant and agent via Notice of Deficiency (NOD) to request additional information and identify technical deficiencies. There are two deficiency response periods available to the applicant. There are 14 days to resolve deficiencies noted in the first NOD. If a second NOD is issued, there is an additional 14 days to resolve deficiencies. If the response to the second notice is not received, is incomplete or inadequate, or provides new information that is incomplete or inadequate, the application must be withdrawn or will be denied. Please note that because the technical review is underway, whether the application is withdrawn or denied **the application fee will be forfeited**.
4. The program has 90 calendar days to complete the technical review of the application. If the application is technically adequate, such that it complies with the Edwards Aquifer rules, and is protective of the Edwards Aquifer during and after construction, an approval letter will be issued. Construction or other regulated activity may not begin until an approval is issued.

Mid-Review Modifications

It is important to have final site plans prior to beginning the permitting process with TCEQ to avoid delays.

Occasionally, circumstances arise where you may have significant design and/or site plan changes after your Edwards Aquifer application has been deemed administratively complete by TCEQ. This is considered a "Mid-Review Modification". Mid-Review Modifications may require redistribution of an application that includes the proposed modifications for public comment.

If you are proposing a Mid-Review Modification, two options are available:

- If the technical review has begun your application can be denied/withdrawn, your fees will be forfeited, and the plan will have to be resubmitted.
- TCEQ can continue the technical review of the application as it was submitted, and a modification application can be submitted at a later time.

If the application is denied/withdrawn, the resubmitted application will be subject to the administrative and technical review processes and will be treated as a new application. The application will be redistributed to the affected jurisdictions.

Please contact the regional office if you have questions. If your project is located in Williamson, Travis, or Hays County, contact TCEQ's Austin Regional Office at 512-339-2929. If your project is in Comal, Bexar, Medina, Uvalde, or Kinney County, contact TCEQ's San Antonio Regional Office at 210-490-3096

Please fill out all required fields below and submit with your application.

<table>
<tr><td colspan="5">1. Regulated Entity Name: Rancho Del Cielo Phase 4B</td><td colspan="5">2. Regulated Entity No.: RN111188447</td></tr>
<tr><td colspan="5">3. Customer Name: Lennar Homes of Texas Land and Construction, Ltd.</td><td colspan="5">4. Customer No.: CN620412207</td></tr>
<tr><td>5. Project Type:
(Please circle/check one)</td><td colspan="2">New</td><td>Modification</td><td colspan="2">Extension</td><td>Exception</td><td colspan="2"></td></tr>
<tr><td>6. Plan Type:
(Please circle/check one)</td><td>WPAP</td><td>CZP</td><td>SCS</td><td>UST</td><td>AST</td><td>EXP</td><td>EXT</td><td>Technical Clarification</td><td>Optional Enhanced Measures</td></tr>
<tr><td>7. Land Use:
(Please circle/check one)</td><td colspan="2">Residential</td><td colspan="3">Non-residential</td><td colspan="2">8. Site (acres):</td><td>198.49 ac</td></tr>
<tr><td>9. Application Fee:</td><td colspan="2">$855.00</td><td colspan="3">10. Permanent BMP(s):</td><td colspan="3">N/A</td></tr>
<tr><td>11. SCS (Linear Ft.):</td><td colspan="2">1,710 LF</td><td colspan="3">12. AST/UST (No. Tanks):</td><td colspan="3">N/A</td></tr>
<tr><td>13. County:</td><td colspan="2">Williamson</td><td colspan="3">14. Watershed:</td><td colspan="3">Glasscock Branch</td></tr>
</table>

Application Distribution

Instructions: Use the table below to determine the number of applications required. One original and one copy of the application, plus additional copies (as needed) for each affected incorporated city, county, and groundwater conservation district are required. Linear projects or large projects, which cross into multiple jurisdictions, can require additional copies. Refer to the "Texas Groundwater Conservation Districts within the EAPP Boundaries" map found at:

http://www.tceq.texas.gov/assets/public/compliance/field_ops/eapp/EAPP%20GWCD%20map.pdf

For more detailed boundaries, please contact the conservation district directly.

Austin Region			
County:	**Hays**	**Travis**	**Williamson**
Original (1 req.)	___	___	✓
Region (1 req.)	___	___	✓
County(ies)	___	___	✓
Groundwater Conservation District(s)	___Edwards Aquifer Authority ___Barton Springs/ Edwards Aquifer ___Hays Trinity ___Plum Creek	___Barton Springs/ Edwards Aquifer	NA
City(ies) Jurisdiction	___Austin ___Buda ___Dripping Springs ___Kyle ___Mountain City ___San Marcos ___Wimberley ___Woodcreek	___Austin ___Bee Cave ___Pflugerville ___Rollingwood ___Round Rock ___Sunset Valley ___West Lake Hills	___Austin ___Cedar Park ___Florence ___Georgetown ___Jerrell ___Leander ___Liberty Hill ___Pflugerville ___Round Rock

San Antonio Region					
County:	**Bexar**	**Comal**	**Kinney**	**Medina**	**Uvalde**
Original (1 req.)	___	___	___	___	___
Region (1 req.)	___	___	___	___	___
County(ies)	___	___	___	___	___
Groundwater Conservation District(s)	___ Edwards Aquifer Authority ___Trinity-Glen Rose	___Edwards Aquifer Authority	___Kinney	___EAA ___Medina	___EAA ___Uvalde
City(ies) Jurisdiction	___Castle Hills ___Fair Oaks Ranch ___Helotes ___Hill Country Village ___Hollywood Park ___San Antonio (SAWS) ___Shavano Park	___Bulverde ___Fair Oaks Ranch ___Garden Ridge ___New Braunfels ___Schertz	NA	___San Antonio ETJ (SAWS)	NA

I certify that to the best of my knowledge, that the application is complete and accurate. This application is hereby submitted to TCEQ for administrative review and technical review.
Michael Fisher, P.E. Print Name of Customer/Authorized Agent
Signature of Customer/Authorized Agent — Date: 10/9/24

FOR TCEQ INTERNAL USE ONLY				
Date(s)Reviewed:		Date Administratively Complete:		
Received From:		Correct Number of Copies:		
Received By:		Distribution Date:		
EAPP File Number:		Complex:		
Admin. Review(s) (No.):		No. AR Rounds:		
Delinquent Fees (Y/N):		Review Time Spent:		
Lat./Long. Verified:		SOS Customer Verification:		
Agent Authorization Complete/Notarized (Y/N):		Fee Check:	Payable to TCEQ (Y/N):	
Core Data Form Complete (Y/N):			Signed (Y/N):	
Core Data Form Incomplete Nos.:			Less than 90 days old (Y/N):	

GENERAL INFORMATION

General Information Form

Texas Commission on Environmental Quality

For Regulated Activities on the Edwards Aquifer Recharge and Transition Zones and Relating to 30 TAC §213.4(b) & §213.5(b)(2)(A), (B) Effective June 1, 1999

To ensure that the application is administratively complete, confirm that all fields in the form are complete, verify that all requested information is provided, consistently reference the same site and contact person in all forms in the application, and ensure forms are signed by the appropriate party.

Note: Including all the information requested in the form and attachments contributes to more streamlined technical reviews.

Signature

To the best of my knowledge, the responses to this form accurately reflect all information requested concerning the proposed regulated activities and methods to protect the Edwards Aquifer. This **General Information Form** is hereby submitted for TCEQ review. The application was prepared by:

Print Name of Customer/Agent: Michael Fisher, P.E.

Date: 10/9/24

Signature of Customer/Agent:



Project Information

1. Regulated Entity Name: Rancho Del Cielo Phase 4B
2. County: Williamson
3. Stream Basin: Glasscock Branch
4. Groundwater Conservation District (If applicable): N/A
5. Edwards Aquifer Zone:

   ☒ Recharge Zone
   ☐ Transition Zone

6. Plan Type:

   ☐ WPAP
   ☒ SCS
   ☐ Modification
   ☐ AST
   ☐ UST
   ☐ Exception Request

7. Customer (Applicant):

   Contact Person: Ally Benoit
   Entity: Lennar Homes of Texas Land and Construction, Ltd.
   Mailing Address: 13620 N FM 620 Bldg. B, Suite 150
   City, State: Austin, Texas Zip: 78717
   Telephone: (469)583-9989 FAX: _____
   Email Address: ally.benoit@Lennar.com

8. Agent/Representative (If any):

   Contact Person: Jennifer Franklin, P.E.
   Entity: Pape-Dawson Consulting Engineers, LLC
   Mailing Address: 10801 N MoPac Expressway, Bldg. 3, Suite 200
   City, State: Austin, Texas Zip: 78759
   Telephone: (512) 454-8711 FAX: _____
   Email Address: jfranklin@pape-dawson.com

9. Project Location:

   ☐ The project site is located inside the city limits of _____.
   ☐ The project site is located outside the city limits but inside the ETJ (extra-territorial jurisdiction) of _____.
   ☒ The project site is not located within any city's limits or ETJ.

10. ☒ The location of the project site is described below. The description provides sufficient detail and clarity so that the TCEQ's Regional staff can easily locate the project and site boundaries for a field investigation.

    From TCEQ's Austin office, travel north on I-35 North approximately 26.6 miles and take Exit 271 towards the I-35 Frontage Rd in Jarrell. Exit I-35 North and travel approximately 0.5 miles on the I-35 Frontage Rd before turning left onto CR 237 (Ronald Reagan Blvd). After approximately 0.5 miles, turn right to stay on CR 237. Travel approximately 0.8 more miles before arriving at the site. The site is located northwest of the intersection of CR 237 and CR 238.

11. ☒ **Attachment A – Road Map**. A road map showing directions to and the location of the project site is attached. The project location and site boundaries are clearly shown on the map.

12. ☒ **Attachment B - USGS / Edwards Recharge Zone Map**. A copy of the official 7 ½ minute USGS Quadrangle Map (Scale: 1" = 2000') of the Edwards Recharge Zone is attached. The map(s) clearly show:

    ☒ Project site boundaries.
    ☒ USGS Quadrangle Name(s).
    ☒ Boundaries of the Recharge Zone (and Transition Zone, if applicable).
    ☒ Drainage path from the project site to the boundary of the Recharge Zone.

13. ☒ **The TCEQ must be able to inspect the project site or the application will be returned**. Sufficient survey staking is provided on the project to allow TCEQ regional staff to locate the boundaries and alignment of the regulated activities and the geologic or manmade features noted in the Geologic Assessment.

    ☐ Survey staking will be completed by this date: _____

14. ☒ **Attachment C – Project Description**. Attached at the end of this form is a detailed narrative description of the proposed project. The project description is consistent throughout the application and contains, at a minimum, the following details:

    ☒ Area of the site
    ☒ Offsite areas
    ☒ Impervious cover
    ☒ Permanent BMP(s)
    ☒ Proposed site use
    ☒ Site history
    ☒ Previous development
    ☐ Area(s) to be demolished

15. Existing project site conditions are noted below:

    ☐ Existing commercial site
    ☐ Existing industrial site
    ☐ Existing residential site
    ☒ Existing paved and/or unpaved roads
    ☒ Undeveloped (Cleared)
    ☒ Undeveloped (Undisturbed/Uncleared)
    ☐ Other: _____

Prohibited Activities

16. ☒ I am aware that the following activities are prohibited on the Recharge Zone and are not proposed for this project:

    (1) Waste disposal wells regulated under 30 TAC Chapter 331 of this title (relating to Underground Injection Control);

    (2) New feedlot/concentrated animal feeding operations, as defined in 30 TAC §213.3;

    (3) Land disposal of Class I wastes, as defined in 30 TAC §335.1;

    (4) The use of sewage holding tanks as parts of organized collection systems; and

    (5) New municipal solid waste landfill facilities required to meet and comply with Type I standards which are defined in §330.41(b), (c), and (d) of this title (relating to Types of Municipal Solid Waste Facilities).

    (6) New municipal and industrial wastewater discharges into or adjacent to water in the state that would create additional pollutant loading.

17. ☒ I am aware that the following activities are prohibited on the Transition Zone and are not proposed for this project:

(1) Waste disposal wells regulated under 30 TAC Chapter 331 (relating to Underground Injection Control);

(2) Land disposal of Class I wastes, as defined in 30 TAC §335.1; and

(3) New municipal solid waste landfill facilities required to meet and comply with Type I standards which are defined in §330.41 (b), (c), and (d) of this title.

Administrative Information

18. The fee for the plan(s) is based on:

☐ For a Water Pollution Abatement Plan or Modification, the total acreage of the site where regulated activities will occur.
☒ For an Organized Sewage Collection System Plan or Modification, the total linear footage of all collection system lines.
☐ For a UST Facility Plan or Modification or an AST Facility Plan or Modification, the total number of tanks or piping systems.
☐ A request for an exception to any substantive portion of the regulations related to the protection of water quality.
☐ A request for an extension to a previously approved plan.

19. ☒ Application fees are due and payable at the time the application is filed. If the correct fee is not submitted, the TCEQ is not required to consider the application until the correct fee is submitted. Both the fee and the Edwards Aquifer Fee Form have been sent to the Commission's:

☐ TCEQ cashier
☒ Austin Regional Office (for projects in Hays, Travis, and Williamson Counties)
☐ San Antonio Regional Office (for projects in Bexar, Comal, Kinney, Medina, and Uvalde Counties)

20. ☒ Submit one (1) original and one (1) copy of the application, plus additional copies as needed for each affected incorporated city, groundwater conservation district, and county in which the project will be located. The TCEQ will distribute the additional copies to these jurisdictions. The copies must be submitted to the appropriate regional office.

21. ☒ No person shall commence any regulated activity until the Edwards Aquifer Protection Plan(s) for the activity has been filed with and approved by the Executive Director.

ATTACHMENT A

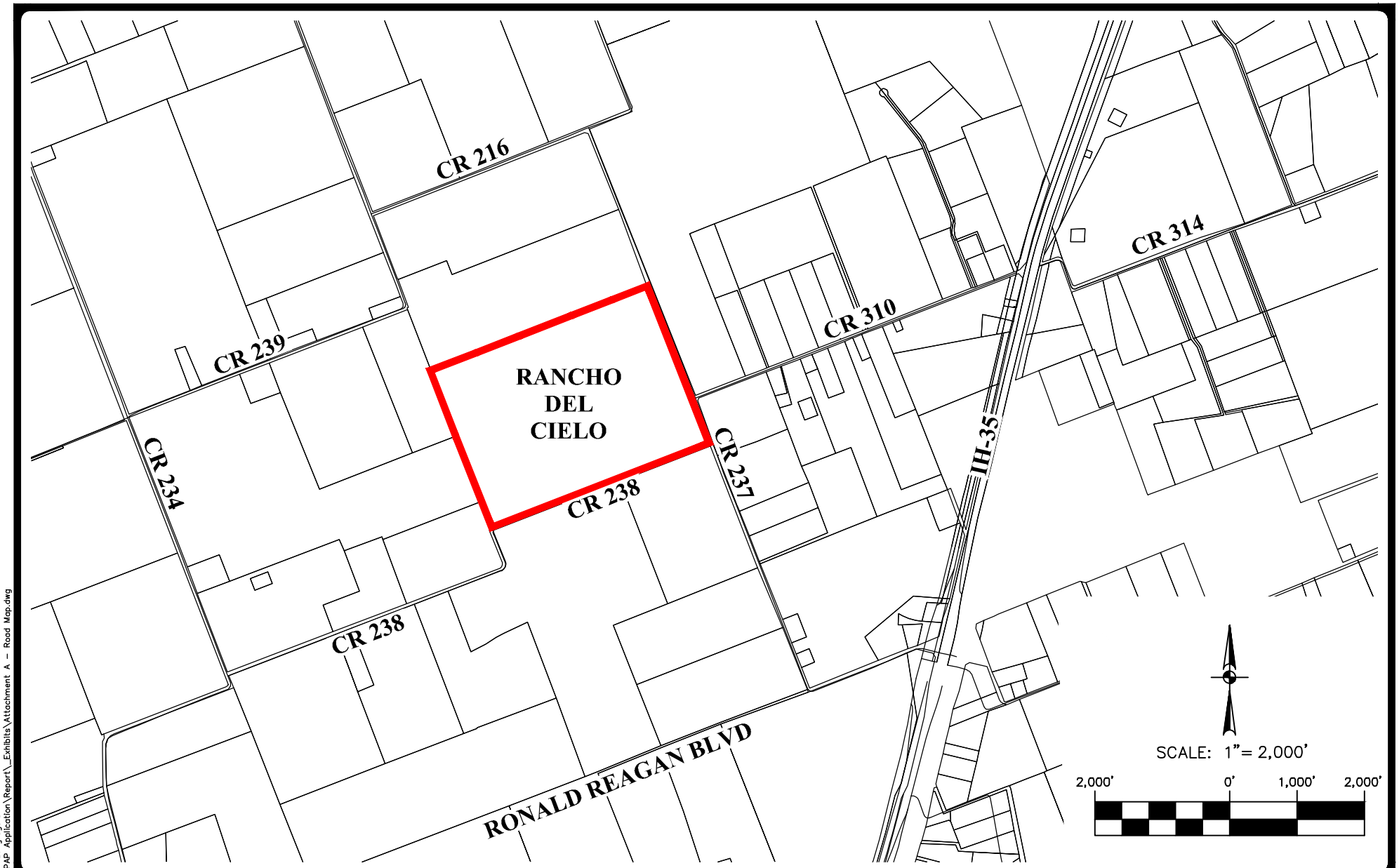

JOB NO. 51118-06
DATE DECEMBER 2022
DESIGNER EG
CHECKED JF DRAWN EG
SHEET 1 of 1

RANCHO DEL CIELO

WILLIAMSON COUNTY, TEXAS

ROAD MAP

PAPE-DAWSON ENGINEERS
AUSTIN I SAN ANTONIO I HOUSTON I FORT WORTH I DALLAS
10801 N MOPAC EXPY, BLDG 3, STE 200 I AUSTIN, TX 78759 I 512.454.8711
TBPE FIRM REGISTRATION #470 I TBPLS FIRM REGISTRATION #10028801

Date: Nov 29, 2022, 12:32pm User ID: grogers
File: H:\Projects\511\18\06\307 WPAP Application\Report_Exhibits\Attachment A - Road Map.dwg

THIS DOCUMENT HAS BEEN PRODUCED FROM MATERIAL THAT WAS STORED AND/OR TRANSMITTED ELECTRONICALLY AND MAY HAVE BEEN INADVERTENTLY ALTERED. RELY ONLY ON FINAL HARDCOPY MATERIALS BEARING THE CONSULTANT'S ORIGINAL SIGNATURE AND SEAL.

ATTACHMENT B

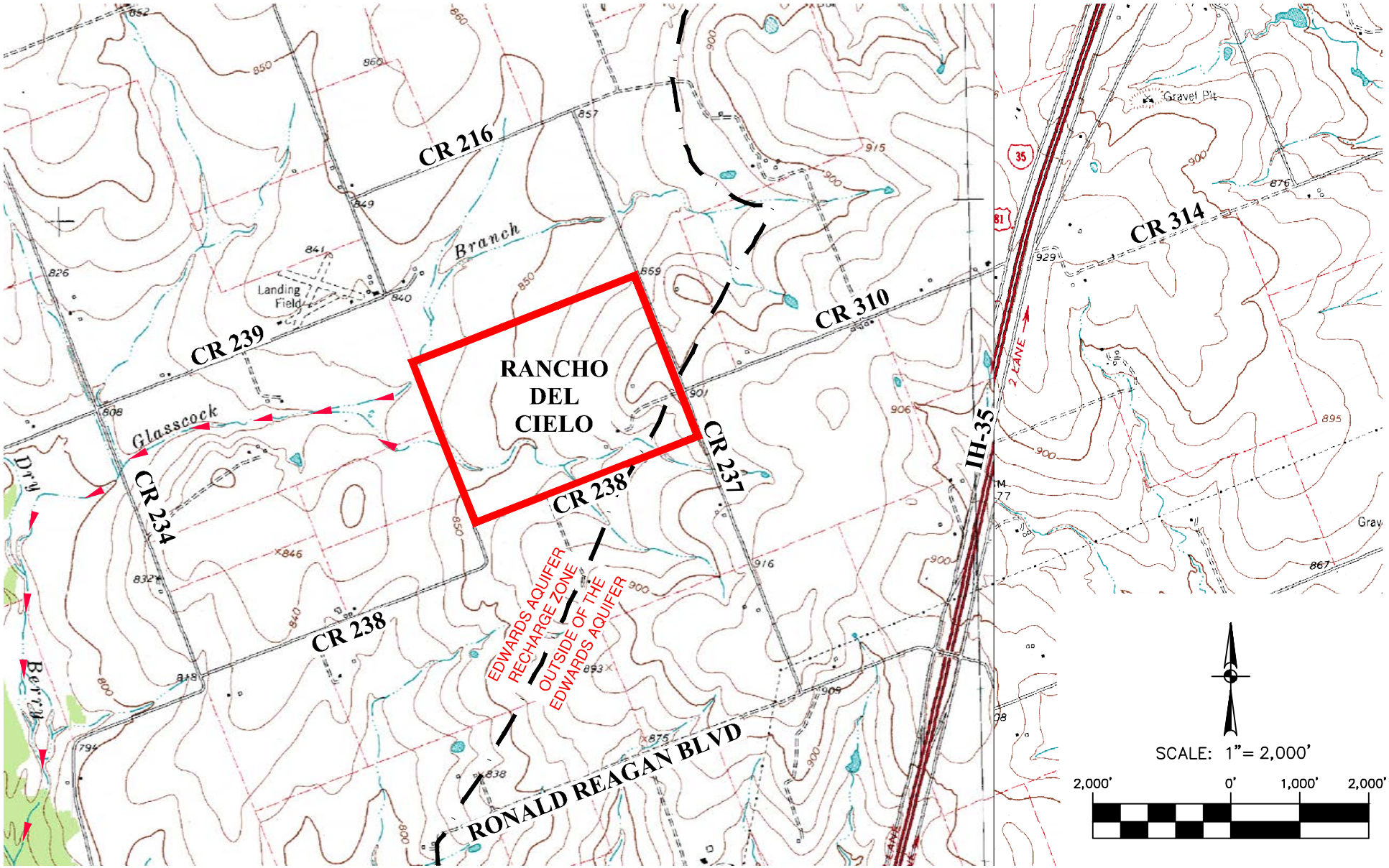

JOB NO. 51118-06
DATE DECEMBER 2022
DESIGNER EG
CHECKED JF DRAWN EG
SHEET 1 of 1

RANCHO DEL CIELO

WILLIAMSON COUNTY, TEXAS

USGS / EDWARDS AQUIFER RECHARGE ZONE MAP

PAPE-DAWSON ENGINEERS
AUSTIN | SAN ANTONIO | HOUSTON | FORT WORTH | DALLAS
10801 N MOPAC EXPY, BLDG 3, STE 200 | AUSTIN, TX 78759 | 512.454.8711
TBPE FIRM REGISTRATION #470 | TBPLS FIRM REGISTRATION #10028801

Date: Nov 29, 2022, 1:34pm User ID: grogers
File: H:\Projects\511\18\06\307 WPAP Application\Report\go-by_Exhibits\Attachment B - USGS Quad Map.dwg
THIS DOCUMENT HAS BEEN PRODUCED FROM MATERIAL THAT WAS STORED AND/OR TRANSMITTED ELECTRONICALLY AND MAY HAVE BEEN INADVERTENTLY ALTERED. RELY ONLY ON FINAL HARDCOPY MATERIALS BEARING THE CONSULTANT'S ORIGINAL SIGNATURE AND SEAL.

ATTACHMENT C

RANCHO DEL CIELO PHASE 4B
Sewage Collection System Application

PROJECT DESCRIPTION

Rancho Del Cielo Phase 4B is located on approximately 10.16 acres within an overall 198.49-acre multi-phase development proposed northwest of the intersection of County Road 237 and County Road 238 in Williamson County, Texas. The limits of construction shown on the Rancho Del Cielo Phase 4B construction plans are approximately 3.91 acres. The Phase 4B project limits are located primarily over the Edwards Aquifer Recharge Zone, with a small portion of the easternmost corner of the project being located entirely outside of the Edwards Aquifer. Please refer to the site plan and construction plans included with this application. A Water Pollution Abatement Plan (WPAP) application for this development is currently being prepared and will be submitted concurrently to the Texas Commission on Environmental Quality (TCEQ).

Rancho Del Cielo Phase 4B is proposed for single-family residential development. The site is currently undeveloped. As shown in the geologic assessment provided, there is one (1) manmade geologic feature onsite (WW-1, an existing hand-dug water well) located in the overall Rancho Del Ciel limits. This manmade geological feature is not located within the Phase 4B project limits. Cursory visual observation indicates that the site is generally clear of heavy vegetation and is primarily used as farmland. Please refer to the site geologic map provided with this geologic assessment for additional information.

The Rancho Del Cielo Phase 4B SCS application proposes the construction of approximately 1,442 LF of 6-inch (6”) gravity wastewater mains; 24 LF of 4-inch (4”) and 268 LF of 6-inch (6”) gravity wastewater services. There are 20 residential lots proposed within Rancho Del Cielo Phase 4B which will be directly served by the gravity wastewater mains permitted with this SCS.

Regulated activities proposed include excavation, construction of gravity sewer mains, manhole installation, and backfill and compaction. Approximately 3.43 acres may be disturbed, as identified by the limits of the fifty-foot (50’) radius SCS/GA envelope shown on the plans.

Approximately 4,200 gallons per day (average flow) of domestic wastewater from Rancho Del Cielo Phase 4B will flow through this SCS. Approximately 315,000 gallons per day (average flow) of domestic

wastewater will flow through this SCS at ultimate build-out. Sewage flow will be disposed of by conveyance to the existing Donahoe Creek (City of Jarrell) Wastewater Treatment via an existing City of Jarrell lift station located at FM 487. Potable water will be provided by the City of Jarrell. Please refer to the site plan and construction plans included with this application.

ELECTRONICALLY RECORDED 2021181477
Williamson County, Texas Total Pages: 5

SPECIAL WARRANTY DEED

THE STATE OF TEXAS §
§ KNOW ALL MEN BY THESE PRESENTS:
COUNTY OF WILLIAMSON §

THAT, LENNAR HOMES OF TEXAS LAND AND CONSTRUCTION, LTD., a Texas limited partnership ("Grantor"), for and in consideration of the sum of $10.00 cash in hand paid by KL LHB3 AIV LLC, a Delaware limited liability company ("Grantee"), whose address is c/o Kennedy Lewis Investment Management LLC, 111 West 33rd Street, Suite 1910, New York, NY 10120, Attn.: Anthony Pasqua, and other good and valuable consideration, the receipt and sufficiency of which are hereby acknowledged by Grantor, has GRANTED, SOLD and CONVEYED, and by these presents does GRANT, SELL and CONVEY unto Grantee, that certain real property situated in Williamson County, Texas, and described in Exhibit "A" attached hereto and made a part hereof for all purposes (the "Lots"), and all buildings, fixtures and other improvements located on the Lots, if any, together with all and singular the rights, privileges, hereditaments and appurtenances pertaining to such real property, including, but not limited to, all right, title and interest of Grantor, if any, in and to (1) any strips and gores, if any, between the Lots and any abutting properties, whether owned or claimed by deed, limitations or otherwise; and (2) any land lying within any highway, avenue, street, road, alley, easement or right of way, open or proposed, in, or across, abutting or adjacent to the Lots (all of such real property, rights and appurtenances herein referred to collectively as the "Property").

This conveyance is made by Grantor and accepted by Grantee subject only to the easements, restrictions and other matters reference now of record to the extent the same are validly existing and applicable to the Property and further subject to all matters that a current, accurate survey of the Property would show (collectively, the "Permitted Exceptions").

TO HAVE AND TO HOLD the Property, together with, all and singular, the rights and appurtenances thereto in anywise belonging, to Grantee and Grantee's successors and assigns forever; and subject only to the Permitted Exceptions, Grantor does hereby bind Grantor and Grantor's successors and assigns to warrant and forever defend, all and singular, the Property unto the Grantee and Grantee's successors and assigns, against every person whomsoever lawfully claiming or to claim the same, or any part thereof by, through or under Grantor, but not otherwise.

[Signature Page Immediately Follows]

Unofficial Document

EXECUTED to be effective the 22nd day of November, 2021.

GRANTOR:

LENNAR HOMES OF TEXAS LAND AND CONSTRUCTION, LTD.,
a Texas limited partnership

By: U.S. Home Corporation, a Delaware corporation, its General Partner

By: _____
Kenneth T. Blaker,
Authorized Agent

STATE OF Texas)
)
COUNTY OF Williamson)

This instrument was acknowledged before me on November 22, 2021, by Kenneth T. Blaker, an Authorized Agent of U.S. Home Corporation, a Delaware corporation, the General Partner of LENNAR HOMES OF TEXAS LAND AND CONSTRUCTION, LTD., a Texas limited partnership, on behalf of said corporation and limited partnership.

SAMANTHA ILACQUA
Notary Public, State of Texas
Comm. Expires 12-27-2022
Notary ID 130023832

_____
Notary Public, State of Tx
Name: Samantha Ilacqua
My Commission Expires: 12-27-22

After Recording, Return to:

KL LHB3 AIV LLC
c/o Kennedy Lewis Investment Management LLC
111 West 33rd Street, Suite 1910
New York, NY 10120
Attn.: Anthony Pasqua

Unofficial Document

EXHIBIT A
LEGAL DESCRIPTION

FIELD NOTE DESCRIPTION OF 198.487 ACRES OF LAND OUT OF THE E. PARSONS SURVEY, ABSTRACT NO. 494, WILLIAMSON COUNTY, TEXAS, BEING TRACT ONE, CALLED 200 ACRES, IN A DEED TO BARBARA JEAN LESCHBER RECORDED IN DOCUMENT NUMBER 2001010135 OF THE OFFICIAL PUBLIC RECORDS OF WILLIAMSON COUNTY, TEXAS, BEING MORE PARTICULARLY DESCRIBED IN A DEED TO FRANK MILLER RECORDED IN VOLUME 372, PAGE 514 OF THE DEED RECORDS OF WILLIAMSON COUNTY, TEXAS. THE SAID 198.487 ACRES OF LAND BEING MORE PARTICULARLY DESCRIBED BY METES AND BOUNDS AS FOLLOWS:

BEGINNING, at a 1/2 inch diameter steel pin found with cap marked FOREST at the intersection of the west line of County Road 237 with the north line of County Road 238 for the southeast corner of the herein described tract;

THENCE, S 68°47'21" W, a distance of 3455.91 feet along the north line of County Road 238 to a 1/2 inch diameter steel pin found with cap marked FOREST at the recognized southwest corner of the said 200 acre Leschber tract, the same being at the southeast corner of an apparent remainder portion of an abandoned County Road;

THENCE, N 21°39'32" W, along the recognized west line of the said 200 acre Leschber tract, at 428.11 feet passing the northeast corner of the said apparent remainder portion of an abandoned County Road (from which a 1/2 inch diameter steel pin found at the northeast corner of that certain 37.63 acre tract described in a deed to Jarrell ISD recorded in Document Number 2010064132 of the Official Public Records of Williamson County, Texas bears S 69°25'07" W, 34.70 feet), the same being at the computed southeast corner of that certain 52 acre tract called Second Tract in a deed to Hubert F. McLaurin and wife, Lorene McLaurin recorded in Volume 342, Page 595 of the Deed Records of Williamson County, Texas and continuing for a total distance of 1455.67 feet to a 1/2 inch diameter steel pin found at the recognized northeast corner of the said 52 acre McLaurin tract, the same being the southeast corner of that certain 33.99 acre tract conveyed to Sterling O. Frymire in a deed recorded in Volume 2135, Page 703 of the Official Records of Williamson County, Texas and being more particularly described in a deed to the Veterans Land Board of Texas recorded in Volume 486, Page 334 of the Deed Records of Williamson County, Texas;

THENCE, N 21°15'28" W, a distance of 1043.19 feet along the west line of the said 200 acre Leschber tract, the same being the east line of the said 33.99 acre Frymire tract, to a steel pin set at the recognized northwest corner of the said 200 acre Leschber tract, the same being the recognized southwest corner of that certain 101.91 acre tract described in a deed to John S. Danek and Jacqueline Danek recorded in Document Number 2000084380 of the Official Public Records of Williamson County, Texas, from which a 1/2 inch diameter steel pin found at the northeast corner of the said 33.99 acre Frymire tract bears N 21°15'28" W, 998.58 feet;

THENCE, along the recognized north line of the said 200 acre Leschber tract as fenced, the same being the recognized south line of the said 101.91 acre Danek tract, the following five (5) courses and distances:

1) N 68°44'55" E, 737.37 feet to a 1/2 inch diameter steel pin found;

2) N 68°45'29" E, 677.05 feet to a 1/2 inch diameter steel pin found;

3) N 68°42'15" E, 840.22 feet to a 1/2 inch diameter steel pin found;

4) N 68°44'25" E, 643.56 feet to a 1/2 inch diameter steel pin found;

5) N 68°44'06" E, 557.69 feet to a 1/2 inch diameter steel pin set on the west line of County Road 237 at the recognized northeast corner of the said 200 acre Leschber tract and recognized southeast corner of the said 101.91 acre Danek tract, from which a 1/2 inch diameter steel pin found at the northeast corner of the said 101.91 acre Danek tract bears N 21°29'04" W, 1239.93 feet;

Unofficial Document

THENCE, S 21°29'29" E, a distance of 2502.05 feet along the west line of County Road 237 to the PLACE OF BEGINNING, containing 198.487 acres of land, more or less.

SAVE AND EXCEPT that certain 0.230 acre tract conveyed under that Special Warranty Deed recorded under County Clerk's File No. 2020032432, 2020032433, 2020032434, 2020032435, and 2020032436, Official Public records of Williamson County, Texas.

NOTE: The Company is prohibited from insuring the area or quantity of the land described herein. Any statement in the above legal description as to the area or quantity of land is not a representation that such area or quantity is correct, but is made solely for informational and/or identification purposes and does not override the exception contained in Schedule B, Item 2 herein.

Unofficial Document

ELECTRONICALLY RECORDED
OFFICIAL PUBLIC RECORDS

2021181477

Pages: 5 Fee: $38.00
11/30/2021 08:40 AM
KCURRIE



Nancy E. Rister, County Clerk
Williamson County,Texas

Unofficial Document

198.487 AC.

(200 ACRES)
BARBARA JEAN LESCHBER
DOC. 2001010135
TRACT ONE

DESCRIBED
(200 ACRES)
FRANK MILLER
VOL. 372, PG. 514

(101.91 ACRES)
JOHN S. DANEK AND
JACQUELINE DANEK
DOC. 2000084380

(88.20 ACRES)
BRYAN D. MILLER
DOC. 2013054119

(12.75 ACRES)
MICHAEL W. BARTLETT AND WIFE
ELIZABETH PRICE BARTLETT
VOL. 2715, PG. 519
TRACT II

(52 ACRES)
HUBERT F. McLAURIN AND WIFE,
LORENE McLAURIN
VOL. 342, PG. 595
SECOND TRACT

(33.89 ACRES)
STRUNG O. FITZWATER
VOL. 2135, PG. 703
DESCRIBED VOL. 486, PG. 334

(37.63 ACRES)
JARRELL ISD
DOC. 2010064132

(162.93 ACRES)
WESS A. CASSENS, JR., ET AL
VOL. 1867, PG. 471

DESCRIBED VOL. 461, PG. 42

(64 ACRES)
BARBARA JEAN LESCHBER
DOC. 2001010135
TRACT TWO

DESCRIBED
(64 ACRES)
(EXCLUSIVE OF PUBLIC ROADS)
VOL. 285, PG. 88

N21°15'28"W 1043.19'
[N21°15'28"W 1043.19']

N21°15'28"W 898.95'

N68°44'55"E 737.37'

N68°45'29"E 677.05'

N68°42'15"E 840.22'
[S71°00'00"W 3454.53']
(N71°E 3427.77')

N68°44'25"E 643.56'

N68°44'06"E 557.69'

S21°19'28"E 2202.95'
(S21°E 2241.90')

N21°19'28"W 1238.93'
[S19°E 1230.94']

S68°47'21"W 3465.91'
(S71°W 3427.77')

N68°32'32"W 453.67'
[S70°E 10.53']

S69°25'07"W 34.70'

N21°32'09"W 451.67'
[N21°00'W 451.67']

S68°47'21"W 425.11'

COUNTY RD 237

COUNTY RD 238

COUNTY RD 310

P.O.B.

FENCE 0.6' EAST

FENCE 1.7' WEST

FENCE 0.5' WEST

FENCE 3.8' WEST

FENCE 4.8' WEST

FENCE 2.8' WEST

CALLED WEST LINE
OLD COUNTY ROAD
DOC. 2010064132

APPARENT OLD WELL

METAL BARN

CULVERT

AXLE

T.P. & L. ELEC EASE.
VOL. 514, PG. 523
(NO WIDTH STATED)

15' WIDE ELEC EASE.
T.P. & L.
VOL. 1756, PG. 483

+/- 262' ELEC EASE.
T.P. & L.
VOL. 1582, PG. 153
(NO WIDTH STATED)

5/8

3/4

F

GRAPHIC SCALE

150 0 75 150 300 600

(IN FEET)
1 inch = 150 ft.

LEGEND

- CONCRETE MONUMENT FOUND
- 1/2"STEEL PIN FOUND (UNLESS NOTED)
- F ● 1/2"STEEL PIN FOUND W/CAP MARKED FOREST
- ○ 1/2"STEEL PIN SET W/CAP MARKED "LENZ & ASSOC."
- ⊗ PIPE FOUND
- ▲ NAIL FOUND
- ◇ COMPUTED POINT
- F/C ○ FENCE CORNER
- P.U.E. PUBLIC UTILITY EASEMENT
- D.E. DRAINAGE EASEMENT
- W.W.E. WASTEWATER EASEMENT
- W.L.E. WATERLINE EASEMENT
- B.L. BUILDING LINE
- PH FIRE HYDRANT
- WWCO WASTEWATER CLEANOUT
- WWMH WASTEWATER MANHOLE
- (BRG.-DIST.) RECORD CALL
- (BRG.-DIST.) RECORD CALL ADJOINER DEED OR AS INDICATED
- T.P.& L. TEXAS POWER & LIGHT
- P.O.C. POINT OF COMMENCEMENT
- P.O.B. POINT OF BEGINNING
- —OU— OVERHEAD UTILITY
- UTILITY POLE
- GUY WIRE
- WOOD FENCE
- W WATER VALVE
- —X— WIRE FENCE
- ØPH PHONE RISER

EASEMENT NOTES:

1) PROPERTY NOT SUBJECT TO EASEMENT TO TEXAS POWER & LIGHT COMPANY, VOL. 283, PAGE 395, DEED RECORDS OF WILLIAMSON COUNTY, TEXAS.

2) PROPERTY NOT SUBJECT TO EASEMENT TO TEXAS POWER & LIGHT COMPANY, VOL. 298, PAGE 534, DEED RECORDS OF WILLIAMSON COUNTY, TEXAS.

3) PROPERTY IS SUBJECT TO EASEMENT TO TEXAS POWER & LIGHT COMPANY, VOL. 514, PAGE 523, DEED RECORDS OF WILLIAMSON COUNTY, TEXAS, AS SHOWN PLOTTED HEREON.

4) PROPERTY IS SUBJECT TO EASEMENT TO TEXAS POWER & LIGHT COMPANY, VOL. 1582, PAGE 153, OFFICIAL RECORDS OF WILLIAMSON COUNTY, TEXAS, AS SHOWN PLOTTED HEREON.

5) PROPERTY IS SUBJECT TO EASEMENT TO TEXAS POWER & LIGHT COMPANY, VOL. 1756, PAGE 483, OFFICIAL RECORDS OF WILLIAMSON COUNTY, TEXAS, AS SHOWN PLOTTED HEREON.

NOTES:

1) BEARING BASIS: TEXAS COORDINATE SYSTEM OF 1983 (NAD83), CENTRAL ZONE.

2) THERE ARE INTERIOR CROSS FENCES LOCATED ON THE PROPERTY WHICH ARE NOT SHOWN.

3) THERE ARE INTERIOR DIRT ROADS LOCATED ON THE PROPERTY WHICH ARE NOT SHOWN.

TO: INDEPENDENCE TITLE COMPANY & ROBERT J. WILSON, TRUSTEE;

THE UNDERSIGNED, A REGISTERED PROFESSIONAL LAND SURVEYOR IN THE STATE OF TEXAS, HEREBY STATES THAT THIS SURVEY WAS THIS DAY MADE ON THE GROUND BY ME OR UNDER MY SUPERVISION AND THAT VISIBLE AND APPARENT IMPROVEMENTS, UTILITIES, AND/OR ROADWAYS ARE SHOWN HEREON, AND THAT EXCEPT AS SHOWN HEREON, THIS PROPERTY HAS ACCESS TO AND FROM A PUBLIC ROADWAY. THIS SURVEY IS IN COMPLIANCE WITH THE MINIMUM STANDARDS AS SET FORTH BY THE TEXAS BOARD OF PROFESSIONAL LAND SURVEYING.

DATE OF SURVEY: JULY 2, 2018

TIMOTHY A. LENZ, R.P.L.S. No. 4393

STATE OF TEXAS · TIMOTHY A. LENZ · 4393 · REGISTERED PROFESSIONAL LAND SURVEYOR

G.F. No: 1810465-WSR
REFERENCE: ROBERT J. WILSON, TRUSTEE

198.487 ACRES OF LAND
E. PARSONS SURVEY, ABSTRACT NO. 494
WILLIAMSON COUNTY, TEXAS
BEING MORE PARTICULARLY DESCRIBED
BY METES AND BOUNDS ATTACHED

LENZ & ASSOCIATES, INC.
FIRM No. 100290-00
COMPLETE PROFESSIONAL LAND SURVEYING SERVICES
(512) 443-1174
4303 RUSSELL DRIVE
AUSTIN, TEXAS 78704

SURVEY #: 2018-0693 F.B. 1083/1

GEOLOGIC ASSESSMENT

Geologic Assessment

Texas Commission on Environmental Quality

For Regulated Activities on The Edwards Aquifer Recharge/transition Zones and Relating to 30 TAC §213.5(b)(3), Effective June 1, 1999

To ensure that the application is administratively complete, confirm that all fields in the form are complete, verify that all requested information is provided, consistently reference the same site and contact person in all forms in the application, and ensure forms are signed by the appropriate party.

Note: Including all the information requested in the form and attachments contributes to more streamlined technical reviews.

Signature

To the best of my knowledge, the responses to this form accurately reflect all information requested concerning the proposed regulated activities and methods to protect the Edwards Aquifer. My signature certifies that I am qualified as a geologist as defined by 30 TAC Chapter 213.

Print Name of Geologist: Russell C Ford Telephone: 512 442-1122

Date: 2/26/2021 Fax: _____

Represented Party: Consultants, Inc. (Name of Company and TBPG or TBPE registration number)

Signature of Geologist

STATE OF TEXAS RUSSELL C. FORD GEOLOGY #1185 LICENSED PROFESSIONAL

Regulated Entity Name: Rancho Del Cielo Phase 1, NW corner CR 238 and 237, Jarrell, Texas

2/26/2021

Project Information

1. Date(s) Geologic Assessment was performed: 4/13/18 and 2/24/2021
2. Type of Project:
   - ☒ WPAP
   - ☒ SCS
   - ☐ AST
   - ☐ UST
3. Location of Project:
   - ☒ Recharge Zone
   - ☒ Transition Zone
   - ☐ Contributing Zone within the Transition Zone

4. ☒ **Attachment A - Geologic Assessment Table**. Completed Geologic Assessment Table (Form TCEQ-0585-Table) is attached.

5. ☒ Soil cover on the project site is summarized in the table below and uses the SCS Hydrologic Soil Groups* (Urban Hydrology for Small Watersheds, Technical Release No. 55, Appendix A, Soil Conservation Service, 1986). If there is more than one soil type on the project site, show each soil type on the site Geologic Map or a separate soils map.

Table 1 - Soil Units, Infiltration Characteristics and Thickness

Soil Name	Group*	Thickness(feet)
HuB	D	0-5
HcB	D	0-5
DoC	D	0-5
AwC2	C	0-5
WhC	C	0-5
AuB	D	0-5
CaC	D	0-5

** Soil Group Definitions (Abbreviated)*

A. Soils having a high infiltration rate when thoroughly wetted.

B. Soils having a moderate infiltration rate when thoroughly wetted.

C. Soils having a slow infiltration rate when thoroughly wetted.

D. Soils having a very slow infiltration rate when thoroughly wetted.

6. ☒ **Attachment B** – **Stratigraphic Column**. A stratigraphic column showing formations, members, and thicknesses is attached. The outcropping unit, if present, should be at the top of the stratigraphic column. Otherwise, the uppermost unit should be at the top of the stratigraphic column.

7. ☒ **Attachment C – Site Geology**. A narrative description of the site specific geology including any features identified in the Geologic Assessment Table, a discussion of the potential for fluid movement to the Edwards Aquifer, stratigraphy, structure(s), and karst characteristics is attached.

8. ☒ **Attachment D – Site Geologic Map(s)**. The Site Geologic Map must be the same scale as the applicant's Site Plan. The minimum scale is 1": 400'

   Applicant's Site Plan Scale: 1" = 400 '
   Site Geologic Map Scale: 1" = 400'
   Site Soils Map Scale (if more than 1 soil type): 1" = 400'

9. Method of collecting positional data:

   ☒ Global Positioning System (GPS) technology.
   ☐ Other method(s). Please describe method of data collection: _____

10. ☒ The project site and boundaries are clearly shown and labeled on the Site Geologic Map.
11. ☒ Surface geologic units are shown and labeled on the Site Geologic Map.
12. ☒ Geologic or manmade features were discovered on the project site during the field investigation. They are shown and labeled on the Site Geologic Map and are described in the attached Geologic Assessment Table.

    ☐ Geologic or manmade features were not discovered on the project site during the field investigation.
13. ☒ The Recharge Zone boundary is shown and labeled, if appropriate.
14. All known wells (test holes, water, oil, unplugged, capped and/or abandoned, etc.): If applicable, the information must agree with Item No. 20 of the WPAP Application Section.

    ☒ There are 1 (#) wells present on the project site and the locations are shown and labeled. (Check all of the following that apply.)
    - ☐ The wells are not in use and have been properly abandoned.
    - ☐ The wells are not in use and will be properly abandoned.
    - ☒ The wells are in use and comply with 16 TAC Chapter 76.

    ☐ There are no wells or test holes of any kind known to exist on the project site.

Administrative Information

15. ☒ Submit one (1) original and one (1) copy of the application, plus additional copies as needed for each affected incorporated city, groundwater conservation district, and county in which the project will be located. The TCEQ will distribute the additional copies to these jurisdictions. The copies must be submitted to the appropriate regional office.

ATTACHMENT A

GEOLOGIC ASSESSMENT TABLE			PROJECT NAME: Rancho Del Cielo Phase 1, NW Corner CR 238 and 237, Jarrell, Texas																	
LOCATION			FEATURE CHARACTERISTICS												EVALUATION			PHYSICAL SETTING		
1A	1B *	1C*	2A	2B	3	4			5	5A	6	7	8A	8B	9	10		11		12
FEATURE ID	LATITUDE	LONGITUDE	FEATURE TYPE	POINTS	FORMATION	DIMENSIONS (FEET)			TREND (DEGREES)	DOM	DENSITY (NO/FT)	APERTURE (FEET)	INFILL	RELATIVE INFILTRATION RATE	TOTAL	SENSITIVITY		CATCHMENT AREA (ACRES)		TOPOGRAPHY
						X	Y	Z		10						<40	≥40	<1.6	≥1.6	
WW-1	30.7822	-97.6422	MB	30	Kdr	10	10	25						5	35	X			X	Drainage

* DATUM: NAD27

2A TYPE	TYPE	2B POINTS
C	Cave	30
SC	Solution cavity	20
SF	Solution-enlarged fracture(s)	20
F	Fault	20
O	Other natural bedrock features	5
MB	Manmade feature in bedrock	30
SW	Swallow hole	30
SH	Sinkhole	20
CD	Non-karst closed depression	5
Z	Zone, clustered or aligned features	[illegible]

8A INFILLING	
N	None, exposed bedrock
C	Coarse - cobbles, breakdown, sand, gravel
O	Loose or soft mud or soil, organics, leaves, sticks, dark colors
F	Fines, compacted clay-rich sediment, soil profile, gray or red colors
V	Vegetation. Give details in narrative description
FS	Flowstone, cements, cave deposits
X	Other materials

12 TOPOGRAPHY

Cliff, Hilltop, Hillside, Drainage, Floodplain, Streambed

I have read, understand, and have complied the Texas Natural Resource Conservation Commission's Instructions to Geologists. The information [illegible] that document and is a true representation of the conditions observed in the field.

My signature certifies that I [illegible] as a geologist as defined by 30 TAC 213

_____ Date _____

TNRCC-0585-Table (Rev. 5-1-02)

Sheet _____ of _____

2/26/2021

ATTACHMENT B

Stratigraphic Column
Rancho Del Cielo Phase 1
NW Corner CR 238 and 237
Jarrell, Texas

HYDROGEOLOGIC SUBDIVISION	FORMATION	THICKNESS (feet)	LITHOLOGY
Confining Unit	Del Rio Formation	60	Calcareous clay with abundant fossils.
Edwards Aquifer	Georgetown Formation	65	Nodular, fossiliferous limestone interbedded with marl

Source: Senger, Collins and Kreitler, 1990



ATTACHMENT C
SITE-SPECIFIC GEOLOGY

The Geologic Assessment (GA) of the Rancho Del Cielo Phase 1 site was performed by Mr. Russell C. Ford, P.G., of Terracon on April 13, 2018 and February 24, 2021. The site is located at the northwest intersection of CR 238 and 237 in Jarrell, Texas, and consists of an approximate 198-acre tract of naturally vegetated, agricultural, land. The site is currently being cultivated.

Exhibit 1 (attached) is a site location map depicting the site in relation to the surrounding area. The areas immediately surrounding the site are primarily agricultural lands. The site is characterized as sloping to the west-northwest and is currently under cultivation. A small drainage way crosses through the southern portion of the site.

The surficial geologic units present at the site has been identified as the Georgetown Formation and the Del Rio Formation. The Georgetown Formation overlies the Edwards and is the uppermost formation of the Edwards aquifer. The formation consists of nodular, fossiliferous limestone interbedded with marl and is about 65 feet thick in the area. The Del Rio Formation is a calcareous, fossiliferous clay containing small deposits of pyrite. The formation is about 60 feet thick in the area and forms the upper confining unit of the Edwards aquifer. The site is located almost entirely within the recharge zone of the Edwards aquifer. The recharge zone boundary crosses the far southeastern corner of the site (see Exhibit 1). Attachment B (attached) is a stratigraphic column prepared for the site. Exposure of these units onsite is obscured by the existing soil cover and site vegetation. Exhibit 2 (attached) is a geologic map of the site. No evidence of any faulting was observed on the site. However, based on a review of available geologic maps of the site, a mapped fault is shown crossing through the approximate center of the site. See Exhibit 2 for the approximate location of the fault. The fault separates the Georgetown Formation from the overlying Del Rio Formation and trends to the northeast and is associated with the Balcones fault zone, which is comprised of normal, high-angle faults, that are generally down-thrown to the southeast. The Balcones fault zone represents the dominant structural trend of the area.

No geologic features were observed on the site or within the 3 small areas associated with the proposed onsite wastewater system where the 50-foot buffer extends offsite onto adjacent properties (see highlighted areas on Exhibit 2). An existing hand dug cistern/water well is located in the south-central portion of the site. The well is approximately 25 feet deep and is covered with a metal plate held down with boulders which prevented access to the well. The well is currently in use as a source of irrigation water. Due to the lack of any significant sensitive recharge features observed on the site and the presence of a relatively impermeable soil cover present, the potential for fluid movement to the Edwards aquifer beneath the site is considered low.



2/26/2021

UNITED STATES – DEPARTMENT OF THE INTERIOR – GEOLOGICAL SURVEY

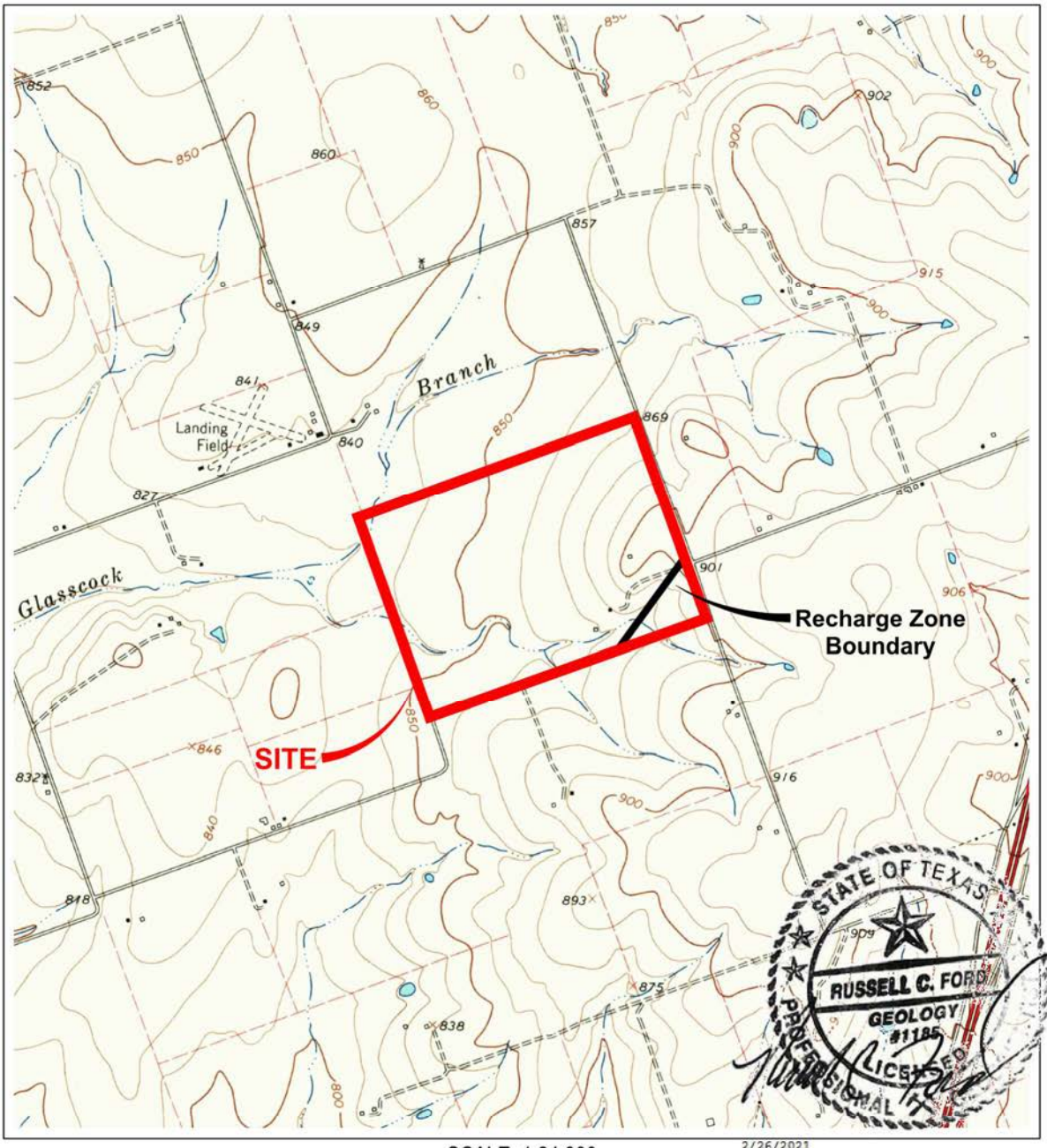

2/26/2021

SCALE 1:24,000

1 .5 0 KILOMETERS 1 2

1000 0 METERS 1000 2000

1 .5 0 1

MILES

1000 0 1000 2000 3000 4000 5000 6000 7000 8000 9000 10000

CONTOUR INTERVAL 10 FEET

NATIONAL GEODETIC VERTICAL DATUM OF 1929

Cobbs Cavern, Texas

N3045-W9737.5

1964

7.5 MINUTE SERIES (TOPOGRAPHIC)

Project Mngr: RF	Project No. 96187234A	Terracon Consulting Engineers and Scientists	TOPOGRAPHIC MAP	EXHIBIT
Drawn By: ATX Drafting	Scale: AS SHOWN	5307 INDUSTRIAL OAKS BLVD. - #160 AUSTIN, TX 78735	Rancho Del Cielo Phase 1	1
Checked By: RF	File No. 96187234A	PH. (512) 442-1122 FAX (512) 442-1181	NW Corner of C.R. 238 & C.R. 237	
Approved By: RF	Date: Feb 15, 2021		Jarrell, Williamson County, Texas	

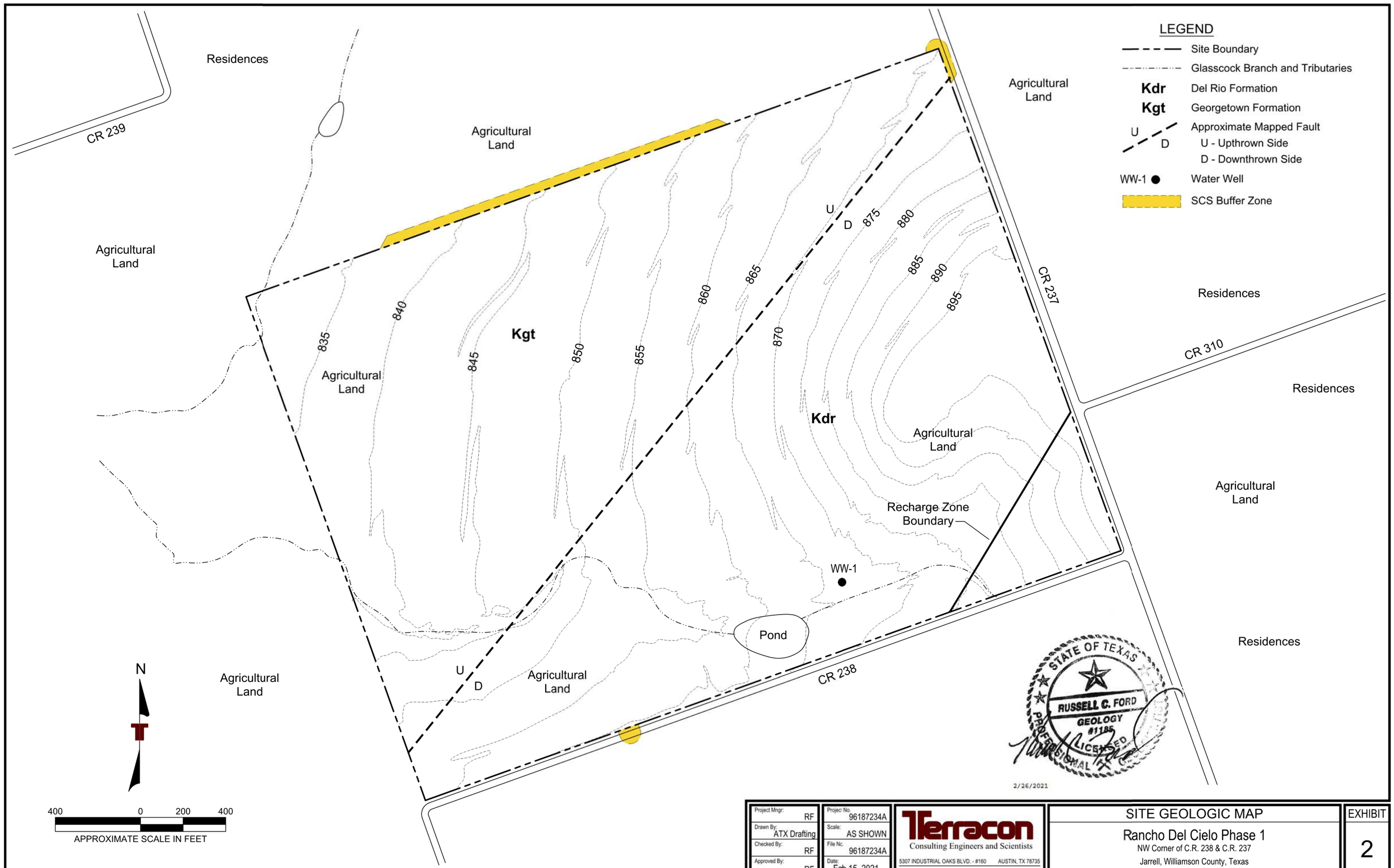

Project Mngr: RF	Projec No.: 96187234A	Terracon Consulting Engineers and Scientists	SITE GEOLOGIC MAP
Drawn By: ATX Drafting	Scale: AS SHOWN	5307 INDUSTRIAL OAKS BLVD. - #160 AUSTIN, TX 78735	Rancho Del Cielo Phase 1
Checked By: RF	File No.: 96187234A	PH. (512) 442-1122 FAX (512) 442-1181	NW Corner of C.R. 238 & C.R. 237
Approved By: RF	Date: Feb 15, 2021		Jarrell, Williamson County, Texas

EXHIBIT 2

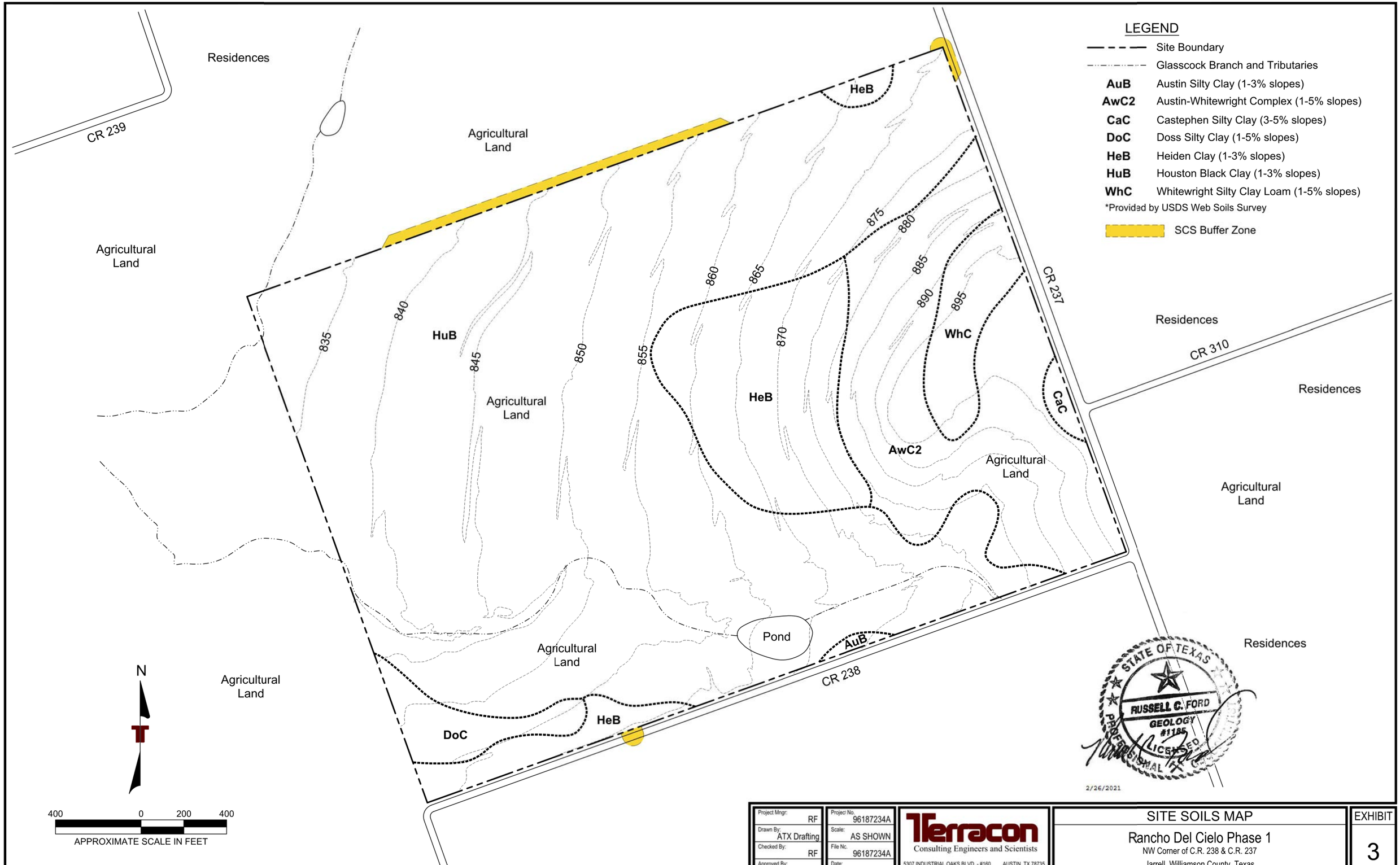

Project Mngr: RF	Projec No. 96187234A	Terracon Consulting Engineers and Scientists	SITE SOILS MAP
Drawn By: ATX Drafting	Scale: AS SHOWN	5307 INDUSTRIAL OAKS BLVD. - #160 AUSTIN, TX 78735	Rancho Del Cielo Phase 1
Checked By: RF	File No. 96187234A	PH. (512) 442-1122 FAX (512) 442-1181	NW Corner of C.R. 238 & C.R. 237
Approved By: RF	Date: Feb 15, 2021		Jarrell, Williamson County, Texas

EXHIBIT 3

SCS APPLICATION

Organized Sewage Collection System Application

Texas Commission on Environmental Quality

For Regulated Activities on the Edwards Aquifer Recharge Zone and Relating to 30 TAC §213.5(c), Effective June 1, 1999

To ensure that the application is administratively complete, confirm that all fields in the form are complete, verify that all requested information is provided, consistently reference the same site and contact person in all forms in the application, and ensure forms are signed by the appropriate party.

Note: Including all the information requested in the form and attachments contributes to more streamlined technical reviews.

Regulated Entity Name: Rancho Del Cielo Phase 4B

1. ☒ **Attachment A – SCS Engineering Design Report**. This Engineering Design Report is provided to fulfill the requirements of 30 TAC Chapter 217, including 217.10 of Subchapter A, §§217.51 – 217.70 of Subchapter C, and Subchapter D as applicable, and is required to be submitted with this SCS Application Form.

Customer Information

2. The entity and contact person responsible for providing the required engineering certification of testing for this sewage collection system upon completion (including private service connections) and every five years thereafter to the appropriate TCEQ region office pursuant to 30 TAC §213.5(c) is:

   Contact Person: Ally Benoit
   Entity: Lennar Homes of Texas Land and Construction, Ltd.
   Mailing Address: 13620 N FM 620
   City, State: Austin, Texas Zip: 78717
   Telephone: (469) 583-9989 Fax: _____
   Email Address: ally.benoit@lennar.com
   The appropriate regional office must be informed of any changes in this information within 30 days of the change.

3. The engineer responsible for the design of this sewage collection system is:

   Contact Person: Jennifer Franklin, P.E.
   Texas Licensed Professional Engineer's Number: 118838
   Entity: Pape-Dawson Consulting Engineers, LLC
   Mailing Address: 10801 N MoPac Expressway, Bldg. 3, Suite 200
   City, State:Austin, TX Zip: 78759
   Telephone:(512) 454-8711 Fax:_____
   Email Address:jfranklin@pape-dawson.com

Project Information

4. Anticipated type of development to be served (estimated future population to be served, plus adequate allowance for institutional and commercial flows):

   ☒ Residential: Number of single-family lots: 20 (Phase4B)
   ☐ Multi-family: Number of residential units: _____
   ☐ Commercial
   ☐ Industrial
   ☐ Off-site system (not associated with any development)
   ☐ Other: _____

5. The character and volume of wastewater is shown below:

100% Domestic	4,200 gallons/day
_____% Industrial	_____ gallons/day
_____% Commingled	_____ gallons/day

   Total gallons/day: 4,200

6. Existing and anticipated infiltration/inflow is 7,620 gallons/day. This will be addressed by: adequate sizing of sewer main.

7. A Water Pollution Abatement Plan (WPAP) is required for construction of any associated commercial, industrial or residential project located on the Recharge Zone.

   ☐ The WPAP application for this development was approved by letter dated _____. A copy of the approval letter is attached.
   ☒ The WPAP application for this development was submitted to the TCEQ on 10/04/2024, but has not been approved.
   ☐ A WPAP application is required for an associated project, but it has not been submitted.
   ☐ There is no associated project requiring a WPAP application.

8. Pipe description:

Table 1 - Pipe Description

Pipe Diameter(Inches)	*Linear Feet (1)*	*Pipe Material (2)*	*Specifications (3)*
See Table 1 attached.			

Total Linear Feet: 1,710

(1) Linear feet - Include stub-outs and double service connections. Do not include private service laterals.
(2) Pipe Material - If PVC, state SDR value.
(3) Specifications - ASTM / ANSI / AWWA specification and class numbers should be included.

9. The sewage collection system will convey the wastewater to the Donahoe Creek (City of Jarrell) Wastewater (name) Treatment Plant. The treatment facility is:

   ☒ Existing
   ☐ Proposed

10. All components of this sewage collection system will comply with:

   ☐ The City of _____ standard specifications.
   ☒ Other. Specifications are attached.

11. ☒ No force main(s) and/or lift station(s) are associated with this sewage collection system.

   ☐ A force main(s) and/or lift station(s) is associated with this sewage collection system and the **Lift Station/Force Main System Application** form (TCEQ-0624) is included with this application.

Alignment

12. ☒ There are no deviations from uniform grade in this sewage collection system without manholes and with open cut construction.

13. ☒ There are no deviations from straight alignment in this sewage collection system without manholes.

   ☐ **Attachment B - Justification and Calculations for Deviation in Straight Alignment without Manholes**. A justification for deviations from straight alignment in this sewage collection system without manholes with documentation from pipe manufacturer allowing pipe curvature is attached.

   ☐ For curved sewer lines, all curved sewer line notes (TCEQ-0596) are included on the construction plans for the wastewater collection system.

Manholes and Cleanouts

14. ☒ Manholes or clean-outs exist at the end of each sewer line(s). These locations are listed below: (Please attach additional sheet if necessary)

Table 2 - Manholes and Cleanouts

Line	*Shown on Sheet*	*Station*	*Manhole or Clean-out?*
See Table 2 attached.	Of		
	Of		
	Of		
	Of		
	Of		
	Of		
	Of		

Line	*Shown on Sheet*	*Station*	*Manhole or Clean-out?*
	Of		
	Of		
	Of		

15. ☒ Manholes are installed at all Points of Curvature and Points of Termination of a sewer line.

16. ☒ The maximum spacing between manholes on this project for each pipe diameter is no greater than:

Pipe Diameter (inches)	Max. Manhole Spacing (feet)
6 - 15	500
16 - 30	800
36 - 48	1000
≥54	2000

☐ **Attachment C – Justification for Variance from Maximum Manhole Spacing**. The maximum spacing between manholes on this project (for each pipe diameter used) is greater than listed in the table above. A justification for any variance from the maximum spacing is attached, and must include a letter from the entity which will operate and maintain the system stating that it has the capability to maintain lines with manhole spacing greater than the allowed spacing.

17. ☐ All manholes will be monolithic, cast-in-place concrete.

☒ The use of pre-cast manholes is requested for this project. The manufacturer's specifications and construction drawings, showing the method of sealing the joints, are attached.

Site Plan Requirements

Items 18 - 25 must be included on the Site Plan.

18. ☒ The Site Plan must have a minimum scale of 1" = 400'.

Site Plan Scale: 1" = 400'.

19. ☒ The Site Plan must include the sewage collection system general layout, including manholes with station numbers, and sewer pipe stub outs (if any). Site plan must be overlain by topographic contour lines, using a contour interval of not greater than ten feet and showing the area within both the five-year floodplain and the 100-year floodplain of any drainage way.

20. Lateral stub-outs:

☒ The location of all lateral stub-outs are shown and labeled.
☐ No lateral stub-outs will be installed during the construction of this sewer collection system.

21. Location of existing and proposed water lines:

☒ The entire water distribution system for this project is shown and labeled.
☐ If not shown on the Site Plan, a Utility Plan is provided showing the entire water and sewer systems.
☐ There will be no water lines associated with this project.

22. 100-year floodplain:

☒ After construction is complete, no part of this project will be in or cross a 100-year floodplain, either naturally occurring or manmade. (Do not include streets or concrete-lined channels constructed above of sewer lines.)
☐ After construction is complete, all sections located within the 100-year floodplain will have water-tight manholes. These locations are listed in the table below and are shown and labeled on the Site Plan. (Do not include streets or concrete-lined channels constructed above sewer lines.)

Table 3 - 100-Year Floodplain

Line	*Sheet*	*Station*
WW-O	23 of 36	1+00 to 6+68
	of	to
	of	to
	of	to

23. 5-year floodplain:

☐ After construction is complete, no part of this project will be in or cross a 5-year floodplain, either naturally occurring or man-made. (Do not include streets or concrete-lined channels constructed above sewer lines.)
☒ After construction is complete, all sections located within the 5-year floodplain will be encased in concrete or capped with concrete. These locations are listed in the table below and are shown and labeled on the Site Plan. (Do not include streets or concrete-lined channels constructed above sewer lines.)

Table 4 - 5-Year Floodplain

Line	*Sheet*	*Station*
WW-O	23 of 36	3+40 to 4+15
	of	to
	of	to
	of	to

24. ☒ Legal boundaries of the site are shown.

25. ☒ The ***final plans and technical specifications*** are submitted for the TCEQ's review. Each sheet of the construction plans and specifications are dated, signed, and sealed by the Texas Licensed Professional Engineer responsible for the design on each sheet.

Items 26 - 33 must be included on the Plan and Profile sheets.

26. ☒ All existing or proposed water line crossings and any parallel water lines within 9 feet of sewer lines are listed in the table below. These lines must have the type of pressure rated pipe to be installed shown on the plan and profile sheets. Any request for a variance from the required pressure rated piping at crossings must include a variance approval from 30 TAC Chapter 290.

☐ There will be no water line crossings.
☐ There will be no water lines within 9 feet of proposed sewer lines.

Table 5 - Water Line Crossings

Line	*Station or Closest Point*	*Crossing or Parallel*	*Horizontal Separation Distance*	*Vertical Separation Distance*
See Table 5 attached.				

27. Vented Manholes:

☒ **No part** of this sewer line is within the 100-year floodplain and vented manholes are not required by 30 TAC Chapter 217.
☐ **A portion** of this sewer line is within the 100-year floodplain and vented manholes will be provided at less than 1500 foot intervals. These water-tight manholes are listed in the table below and labeled on the appropriate profile sheets.
☐ **A portion** of this sewer line is within the 100-year floodplain and an alternative means of venting shall be provided at less than 1500 feet intervals. A description of the alternative means is described on the following page.
☐ **A portion** of this sewer line is within the 100-year floodplain; however, there is no interval longer than 1500 feet located within. No vented manholes will be used.

Table 6 - Vented Manholes

Line	*Manhole*	*Station*	*Sheet*

Line	*Manhole*	*Station*	*Sheet*

28. Drop manholes:

☒ There are no drop manholes associated with this project.
☐ Sewer lines which enter new or existing manholes or "manhole structures" higher than 24 inches above the manhole invert are listed in the table below and labeled on the appropriate profile sheets. These lines meet the requirements of 30 TAC §217.55(l)(2)(H).

Table 7 - Drop Manholes

Line	*Manhole*	*Station*	*Sheet*

29. Sewer line stub-outs (For proposed extensions):

☒ The placement and markings of all sewer line stub-outs are shown and labeled.
☐ No sewer line stub-outs are to be installed during the construction of this sewage collection system.

30. Lateral stub-outs (For proposed private service connections):

☒ The placement and markings of all lateral stub-outs are shown and labeled.
☐ No lateral stub-outs are to be installed during the construction of this sewage collection system.

31. Minimum flow velocity (From Appendix A)

☒ Assuming pipes are flowing full; all slopes are designed to produce flows equal to or greater than 2.0 feet per second for this system/line.

32. Maximum flow velocity/slopes (From Appendix A)

☒ Assuming pipes are flowing full, all slopes are designed to produce maximum flows of less than or equal to 10 feet per second for this system/line.
☐ **Attachment D – Calculations for Slopes for Flows Greater Than 10.0 Feet per Second.** Assuming pipes are flowing full, some slopes produce flows which are greater than 10 feet per second. These locations are listed in the table below. Calculations are attached.

Standard Details	*Shown on Sheet*
Drop manholes **[Required, if a pipe entering a manhole is more than 24 inches above manhole invert]**	N/A of N/A

36. ☒ All organized sewage collection system general construction notes (TCEQ-0596) are included on the construction plans for this sewage collection system.

37. ☒ All proposed sewer lines will be sufficiently surveyed/staked to allow an assessment prior to TCEQ executive director approval. If the alignments of the proposed sewer lines are not walkable on that date, the application will be deemed incomplete and returned.

    ☐ Survey staking was completed on this date: _____

38. ☒ Submit one (1) original and one (1) copy of the application, plus additional copies as needed for each affected incorporated city, groundwater conservation district, and county in which the project will be located. The TCEQ will distribute the additional copies to these jurisdictions. The copies must be submitted to the appropriate regional office.

39. ☒ Any modification of this SCS application will require TCEQ approval, prior to construction, and may require submission of a revised application, with appropriate fees.

Signature

To the best of my knowledge, the responses to this form accurately reflect all information requested concerning the proposed regulated activities and methods to protect the Edwards Aquifer. This **Organized Sewage Collection System Application** is hereby submitted for TCEQ review and executive director approval. The system was designed in accordance with the requirements of 30 TAC §213.5(c) and 30 TAC §217 and prepared by:

Print Name of Licensed Professional Engineer: Michael Fisher, P.E.

Date: 10/9/24

Place engineer's seal here:



Signature of Licensed Professional Engineer: 10/9/24

Standard Details	*Shown on Sheet*
Drop manholes **[Required, if a pipe entering a manhole is more than 24 inches above manhole invert]**	N/A of N/A

36. ☒ All organized sewage collection system general construction notes (TCEQ-0596) are included on the construction plans for this sewage collection system.

37. ☒ All proposed sewer lines will be sufficiently surveyed/staked to allow an assessment prior to TCEQ executive director approval. If the alignments of the proposed sewer lines are not walkable on that date, the application will be deemed incomplete and returned.

    ☐ Survey staking was completed on this date: _____

38. ☒ Submit one (1) original and one (1) copy of the application, plus additional copies as needed for each affected incorporated city, groundwater conservation district, and county in which the project will be located. The TCEQ will distribute the additional copies to these jurisdictions. The copies must be submitted to the appropriate regional office.

39. ☒ Any modification of this SCS application will require TCEQ approval, prior to construction, and may require submission of a revised application, with appropriate fees.

Signature

To the best of my knowledge, the responses to this form accurately reflect all information requested concerning the proposed regulated activities and methods to protect the Edwards Aquifer. This **Organized Sewage Collection System Application** is hereby submitted for TCEQ review and executive director approval. The system was designed in accordance with the requirements of 30 TAC §213.5(c) and 30 TAC §217 and prepared by:

Print Name of Licensed Professional Engineer: Michael Fisher, P.E.

Date: _____

Place engineer's seal here:

Signature of Licensed Professional Engineer:

RANCHO DEL CIELO PHASE 4B
Sewage Collection System Application

Table 1 - Pipe Description

Pipe Diameter (Inches)	Linear Feet (1)	Pipe Material (2)	Specifications (3)
6" Gravity	1,442	PVC, SDR 26	ASTM D3034, ASTM D3212
6" Gravity (Service Line)	268	PVC, SDR 26	ASTM D3034, ASTM D3212
4" Gravity (Service Line)	24	PVC, SDR 26	ASTM D3034, ASTM D3212

Table 2 - Manholes and Cleanouts

LINE	SHOWN ON SHEET	STATION	MANHOLE OR CLEAN-OUT?
WW-O	24 OF 36	1+00.00	MANHOLE
WW-O	24 OF 36	2+74.76	MANHOLE
WW-O	25 OF 36	6+88.37	MANHOLE
WW-O	25 OF 36	7+66.09	MANHOLE
WW-O	25 OF 36	9+43.02	MANHOLE
WW-O	25 OF 36	12+91.89	MANHOLE
WW-O	25 OF 36	14+11.89	CLEANOUT
WW-P	25 OF 36	2+20.00	CLEANOUT

ATTACHMENT A

Rancho Del Cielo Phase 4B

Engineering Design Report



October 2024

by
Pape-Dawson Consulting Engineers, LLC
TBPE, Firm Registration #470

TABLE OF CONTENTS

PROJECT DESCRIPTION 2
GRAVITY SANITARY SEWER PIPING: FLOW & CAPACITY ANALYSIS 3
Odor Control 4
Flow Calculation 4
Capacity Calculation 5
Conclusion 6
GENERAL STRUCTURAL COMPONENTS 6
Project Materials (Pipe and Joints): 6
Project Materials (Bedding): 7
Project Materials (Manholes): 7
Project Materials (Manhole Covers): 8
Minimum and Maximum Slopes 8
Backfill 9
Trenching 9
Minimum and Maximum Trench Width 9
Corrosion Prevention 9
Manholes (General) 9
Manholes (Inverts) 10
Manholes (Ventilation) 10
FLEXIBLE PIPE COMPUTATIONS 11
Live Load Calculations 11
Buckling Pressure Calculations 11
Allowable Buckling Pressure: 12
Pressure Under Installed Conditions 13
Installation Temperature Effects 13
Wall Crushing 14
Tensile Strength 14

Strain **14**
Modulus of Soil Reaction **14**
Zeta Calculation **15**
Pipe Stiffness **16**
Deflection **16**

This Engineering Design Report has been prepared to comply with the Texas Commission on Environmental Quality's Design Criteria for Domestic Wastewater Systems (30 TAC 217), and regulations over the Edwards Aquifer Recharge Zone (30 TAC 213). Please note that throughout this application, in the case of multiple regulations, the more stringent shall apply.

PROJECT DESCRIPTION

Rancho Del Cielo Phase 4B is located on approximately 10.16 acres within an overall 198.49-acre multi-phase development proposed northwest of the intersection of County Road 237 and County Road 238 in Williamson County, Texas. The limits of construction shown on the Rancho Del Cielo Phase 4B construction plans is approximately 3.20 acres. The Phase 4B project limits are located primarily over the Edwards Aquifer Recharge Zone, with a small portion of the easternmost corner of the project being located entirely outside of the Edwards Aquifer. Please refer to the site plan and construction plans included with this application. A Water Pollution Abatement Plan (WPAP) application for this development is being submitted concurrently with this application to the Texas Commission on Environmental Quality (TCEQ.

Rancho Del Cielo Phase 4B is proposed for single-family residential development. The site is currently undeveloped. As shown in the geologic assessment provided, there is one (1) manmade geologic feature onsite (WW-1, an existing hand-dug water well) located in the overall Rancho Del Ciel limits. This manmade geological feature is not located within the Phase 4B project limits. Cursory visual observation indicates that the site is generally clear of heavy vegetation and is primarily used as farmland. Please refer to the site geologic map provided with this geologic assessment for additional information.

The Rancho Del Cielo Phase 4B SCS application proposes the construction of approximately 1,442 LF of 6-inch (6") gravity wastewater mains; 24 LF of 4-inch (4") and 268 LF of 6-inch (6") gravity wastewater services. There are 20 residential lots proposed within Rancho Del Cielo Phase 4B which will be directly served by the gravity wastewater mains permitted with this SCS.

Regulated activities proposed include excavation, construction of gravity sewer mains, manhole installation, and backfill and compaction. Approximately 3.43 acres may be disturbed, as identified by the limits of the fifty-foot (50') radius SCS/GA envelope shown on the plans.

Approximately 4,200 gallons per day (average flow) of domestic wastewater from Rancho Del Cielo Phase 4B will flow through this SCS. Approximately 315,000 gallons per day (average flow) of domestic wastewater will flow through this SCS at ultimate build-out. Sewage flow will be disposed of by conveyance to the existing Donahoe Creek (City of Jarrell) Wastewater Treatment Plant via the existing City of Jarrell lift station located at FM 487. Potable water will be provided by the City of Jarrell. Please refer to the site plan and construction plans included with this application.

Please refer to the Wastewater Collection System sheets included under the construction plans section, which shows the proposed service area and its topographic features. This system is designed to have a minimum structural life of 50 years.

Safety considerations are the responsibility of the contractor. Safety protection shall be accomplished in accordance with the most recent requirements of the Occupational Safety and Health Administration (OSHA) Standards and Interpretations.

GRAVITY SANITARY SEWER PIPING: FLOW & CAPACITY ANALYSIS

Basis for average flow used for design of collection system (**check one or more**):

Per Capita Contributions: _____
Service Connections: ✓
Land Area and Use: ✓
Fixture Analysis: _____

Odor Control

Odor Control is not necessary on this project as it is a gravity line and there will be no conditions where sewage is standing and will become septic.

Flow Calculation

Peaking Factor used for design: **Reference Equations A & B below.**

Peaking Factor is based on: **Design Requirements for peak flow (from Sonterra Municipal Utility District Construction and Development Standards and Procedures)**

Total LUEs = 20 (Based on ultimate buildout of Phase 4B)

1 Living Unit Equivalent (LUE) = 210 gallons per day (average wastewater flow)
Population = 60 persons (Based on an assumed 3 persons per unit)

Average Dry Weather Flowrate (AvgDWF) = $\#\ of\ LUEs\ x\ \frac{210\ \frac{gal}{day}}{1\ LUE}$

20 LUEs x 210 gpd/LUE = 4,200 gpd or 2.92 gpm

Peaking Factor

$$PF = \frac{18+\sqrt{0.0206*F}}{4+\sqrt{0.0206*F}}$$ *Equation A*

F = average wastewater flow in gal/min based on 70 gal/day/LUE

F = 20 LUE's x 3 people/LUE x 70 gal/person/day ÷ 1440 min / day = 2.92 gpm

PF = 4.30

Peak Dry Weather Flow = AvgDWF x PF = 2.92 gpm x 4.30 = 12.56 gpm

Peak Wet Weather Flow = Q_{PW} *= Peak Dry Weather Flow + Infiltration* *Equation B*

Infiltration = 750 gallons per day per acre served

$$= \frac{[\left(750\frac{gpd}{acre}\right)x\ 10.16\ acres]}{1{,}440} = 5.29\ gpm$$

Q_{PW} *= 12.56 gpm + 5.29 gpm = 17.85 gpm*

Please note that capacities are determined using Manning's equation for pipes flowing full with an "n" value of 0.013. A reference for Manning's Equation can be found in "The Uni-Bell Handbook of PVC Pipe: Design and Construction".

Capacity Calculation

Characteristics of 6" ASTM D3034, SDR 26, PVC Sewer Pipe:

Nominal Size = 6"

Outer Diameter (D_o) = 6.275"

Minimum Wall Thickness (t) = 0.241"

Inner Diameter (D_i) = 5.793"

Manning's Equation:

$Q = (k/n)(A)(R^{2/3})(S^{1/2})$

$v = Q/A$

Where:

Q = Discharge (cfs)

k = Constant [(1.49 $ft^{1/3}$)/sec.]

n = Manning's roughness coefficient (unitless)

= 0.013 [as required by 30 TAC 213.53 A(i)]

A = Flow area (ft^2)

R = Hydraulic Radius (ft)

= A/P = Cross sectional area of flow (ft^2)/Wetted perimeter (ft.)

S = Slope (ft/ft)

v = Velocity of flow (ft/s)

Calculations for 6" ASTM 3034, NR, SDR 26, PVC Sewer Pipe:

$A = \pi(D_i^2)/4 = \pi(5.793\ in)^2/4 = 26.36\ in^2 = 0.183\ ft^2$

$P = \pi(D_i) = \pi(5.793\ in) = 18.2\ in = 1.52\ ft$

$R = A/P = 0.183\ ft^2/1.52\ ft. = 0.12\ ft$

S = 0.005

Q = [(1.49 $ft^{1/3}$/sec)/0.013](0.183 ft^2)(0.12 ft)$^{2/3}$(0.005)$^{1/2}$

Q = 0.36 cfs = 162 gpm =Q_{full}

*v = 0.36 cfs/0.183 ft^2=**2.0 ft/s***

*Qmax = 0.36cfs (0.90)(7.48 gallons/1 cf)(60 sec/1 min.)=**145 gpm***

Nominal Main Size (in)	Outer Diameter (in)	Minimum Slope (%)	Area (ft^2)	Hydraulic Radius (A/P)	$R^{2/3}$	$S^{1/2}$	Q-Full (cfs)	Max Pipe (%)	Velocity (ft/s)	Q-Max (gpm)
6	*6.275*	*0.50*	*0.183*	*0.12*	*0.24*	*0.07*	*0.36*	*90*	*2.0*	*145*

Conclusion
The proposed 6" pipe (NR) with a minimum slope of 0.50% has sufficient capacity to convey the projected average and peak flows.

GENERAL STRUCTURAL COMPONENTS

Project Materials (Pipe and Joints):

Nominal Pipe Diameter (in)	Linear Feet	Pipe Material	National Standard Specification for Pipe Material	National Standard for Pipe Joints
6	*1,710*	*PVC SDR 26*	*ASTM 3034*	*ASTM D3212*

Note: Section 217.53 (j)(4) requires a minimum pipe diameter of 6 inches for all gravity sanitary sewer collection system piping.

Watertight, size on size resilient connectors conforming to ASTM C-923 have been specified for connecting pipe to manholes.

Where a collection system parallels a water supply pipe and a nine-foot separation distance cannot be achieved, Section 217.53 (d)(3)(A)(i) requires a collection system pipe be constructed of cast iron, ductile iron, or PVC meeting ASTM specifications with at least a 150 pounds per square inch (psi) rating for both the pipe and joints. The proposed project will comply with these requirements.

Where a collection system pipe crosses a water supply line and a nine-foot separation distance cannot be achieved, Section 217.53(d)(3)(B)(i) requires the collection system pipe be constructed of cast iron, ductile iron, or PVC with a minimum pressure rating of 150 psi. The proposed project will comply with this requirement and that of 30 TAC 217.53(d)(3)(B)(iii).

Project Materials (Bedding):

The specified bedding will comply with ASTM D2321-11 Class I, II or III for materials and densification. A minimum of 6 inches of bedding is required for all pipe.

Pipe Diameter (in)	Pipe Material	Bedding Class
6	*PVC*	*Class I & Class III*

Initial backfill for the pipe sizes shown above will be Class I. Secondary backfill will be Class III. See Table 2 of ASTM D2321-11 "Soil Classes" in Appendix A of this subsection.

Project Materials (Manholes):

Section 217.55 (f) prohibits the use of bricks to adjust a manhole cover to grade or construct a manhole. The proposed project will comply with this requirement.

The inside diameter of a manhole must be no less than 48 inches.

Section 217.55 (n) requires watertight, size-on-size resilient connectors that allow for differential settlement and must conform to American Society for Testing and Materials C-923. The proposed project complies with this requirement.

Under 30 TAC 213.5(C)(3)(A), all manholes over the Recharge Zone must be watertight, with watertight rings and covers. The proposed project complies with this requirement.

The materials specified for manhole construction are **precast concrete.**

Project Materials (Manhole Covers):

Manhole covers must be constructed of impervious materials. If personnel entry is required, a minimum 30-inch diameter clear opening must be provided. Inclusion of steps in a manhole is prohibited. If a manhole must be located within a 100-year floodplain then a means of preventing inflow is required. A manhole cover that is located in a roadway must meet or exceed the American Association of State Highways and Transportation Officials Standard M-306 for load bearing.

Under 30 TAC 213.5 (c)(3)(A), all manholes over the Edwards Aquifer Recharge Zone must be watertight, with watertight rings and covers. This proposed project complies with this requirement.

Minimum and Maximum Slopes

Note: All pipes are designed with a slope that will provide a velocity of at least 2 ft/s flowing full, as calculated using Manning's equation with an "n" value of 0.013. Additionally, the collection system is designed to ensure that, with pipes flowing full, the velocities will be less than 10 feet per second.

The following are the minimum and maximum slopes for each pipe diameter:

Pipe Diameter: ***6" (NR)*** Min. Slope: ***0.60%*** Max. Slope: ***3.50%***

Backfill

Note: The backfill will be free of stones greater than 6 inches in diameter and free of organic or any other unstable material.

Trenching

Note: The trench width will be minimized while still allowing adequate width for proper compaction of backfill, and while still ensuring that at least 6 inches of backfill exists below and on each side of the pipe. The trench walls will be vertical to at least one foot above the pipe.

Trenching will occur over the Recharge Zone and will comply with 30 TAC 213.5.

Minimum and Maximum Trench Width

Based on Sonterra MUD Standard Detail G-02 and 30 TAC 217.54:

Pipe Diameter: ***6" (115 psi)*** Min. Trench Width: ***20***" Max. Trench Width: ***32"***

These trench widths account for the bell diameter.

Corrosion Prevention

Proposed collection system components (pipes, manholes, etc.) will not be susceptible to deterioration through the corrosive effects of an anaerobic sewage environment. However, manholes shall be constructed of or lined with a corrosion resistant material. Where new construction ties into an existing manhole, the existing manholes must be lined, coated, or replaced with a corrosion resistant material.

Manholes (General)

Note: Manholes are provided at all changes in size, grade or alignment of pipe, at the intersection of all pipes and at the end of all lines that may be extended at a future date. A clean-out with

watertight plugs may be installed instead of a manhole if no extensions are anticipated. Clean-outs must pass all testing requirements outlined for gravity collection pipes.

The project complies with the maximum manhole spacing allowed by the TCEQ:

Pipe Diameter (in)	Max. Manhole Spacing (ft)
6 - 15	500
18 - 30	800
36 - 48	1000
54 or larger	2000

Manhole Spacing:
Pipe Diameter: ***6"*** Max. Spacing: ***415 LF***

Manholes (Inverts)

The bottom of a manhole must contain a U-shaped channel which is a smooth continuation of the inlet and outlet pipes. The bench above the channel must be sloped a minimum of 0.5 inches per foot. See the Sonterra MUD Deail WW-01 which complies with these requirements. Note, a manhole connected to a pipe less than 15 inches in diameter must have a channel depth equal to at least half the largest pipe's diameter.

Manholes (Ventilation)

Manholes located within the 100-year floodplain (one location) are gasketed and bolted to prevent inflow. Under 30 TAC 217.55 (n), the collection system must be vented at least every 1,500 feet. This proposed project complies with this requirement.

Reduction of Inflow

Connection of storm water or roof drains to the sewage collection system is prohibited in accordance with 30 TAC 217.55(j)(6).

FLEXIBLE PIPE COMPUTATIONS

Please note, all flexible pipe computations are based on engineering principles and practices for the design of buried PVC pipe systems. Equations used can be found in "The Uni-Bell PVC Pipe Association Handbook of PVC Pipe: Design and Construction" and Buried Pipe Design, 3rd Edition by Moser and Folkman. Please note, the equations used may be in a different format than shown in the Uni-Bell Handbook or Buried Pipe Design, 3rd Edition. Throughout this application "160 psi" pipe refers to the pressure rating of the ASTM 2241, Class 160, SDR 26 pipe used at water/sewer crossings.

Live Load Calculations

No influence of live loads on the performance of this SCS is anticipated. The average burial depth for this line is such that the influence of live loads is negligible.

Buckling Pressure Calculations

This area of the Edwards Aquifer is unsaturated; consequently, there are no anticipated areas where sewer pipe will be placed below the water table. The value of $h_w = 0$ as there will be no height or time period of perched water or groundwater above the pipe crowns of the proposed sewer line. No geotechnical borings were done for this line.

The value of H for use in these calculations is twenty feet (20') as it exceeds the maximum burial depth for this line. The value of γ_s equals 143 pcf is a conservative value based on a dry unit weight of 135 pcf and a moisture content of 6%. This value is conservative as it corresponds to saturated unit weights of commonly used backfill materials.

Allowable Buckling Pressure:

$$q_a = 0.4 * \sqrt{32 * R_w * B' * E_b * (E * I / D^3)}$$ *Equation 1*

$$q_a = 0.4 * \sqrt{32 * 1 * 0.48 * 400(400{,}000 * 0.001/6.034^3)} = 42.31\ psi\ (6"\ PVC\ SDR26, NR)$$

$$R_w = 1 - 0.33 * (h_w / h)$$ *Equation 2*

$$R_w = 1 - 0.33 * (0/240) = 1$$

$$B' = \frac{1}{1 + 4 * e^{-0.065H}}$$ *Equation 3*

$$B' = \frac{1}{1 + 4 * e^{-0.065(20)}} = 0.48$$

$$I = (t^3/12) * (inches^4/linear\ inch)$$ *Equation 4*

$$I = (0.241^3)/12 = 0.001\ in^3 (6"PVC, SDR26{,}115\ psi)$$

$$D = D_o - t$$ *Equation 5*

$$D = 6.275\ inches - 0.241\ inches = 6.034\ inches\ (6"\ PVC, SDR26, NR)$$

Where:

- q_a = Allowable buckling pressure, pounds per square inch (psi)
- h = Height of soil surface above top of pipe in inches (in)
- h_w = Height of water surface above top of pipe in inches (in) (groundwater elevation)
- R_w = Water buoyancy factor. If hw = 0, Rw = 1. If 0 ≤ hw ≤ h (groundwater elevation is between the top of the pipe and the ground surface), calculate Rw with Equation 2
- H = Depth of burial in feet (ft) from ground surface to crown of pipe.
- B' = Empirical coefficient of elastic support
- E_b = Modulus of soil reaction for the bedding material (psi)
- E = Modulus of elasticity of the pipe material (psi)

I = Moment of inertia of the pipe wall cross section per linear inch of pipe, $inch^4$/lineal inch = $inch^3$. For solid wall pipe, "I" can be calculated with Equation 4

t = Pipe structural wall thickness (in)

D = Mean pipe diameter (in)

D_o = Pipe outer diameter (in)

Pressure Under Installed Conditions

$$q_p = \gamma_w * h_w + R_w * (W_c/D) + L_l \qquad \textit{Equation 6}$$

$q_p = 0.0361 * 0 + 1 * (124.63/6.034) + 0 = 20.65\ psi\ (6"\ PVC, SDR26, NR)$

Where:

q_p = Pressure applied to pipe under installed conditions (psi)

γ_w = 0.0361 pounds per cubic inch (pci), specific weight of water

W_c = Vertical soil load on the pipe per unit length in pounds per linear inch (lb/in)

L_l = Live load (lbs)

$$W_c = \gamma_s * H * (D + t)/144 \qquad \textit{Equation 7}$$

$W_c = 143 * 20 * (6.034 + 0.241)/144 = 124.63\ lb/in\ (6"\ PVC, SDR26, NR)$

γs = Specific weight of soil in pounds per cubic foot (pcf)

D = Mean pipe diameter (in)

Pipe Diameter: ***6"(NR)*** Pipe Material: ***PVC, SDR 26*** q_a: ***42.31*** q_p: ***20.65***

Since $q_a \geq q_p$, the specified pipe is acceptable for the proposed installation.

Installation Temperature Effects

Flexible pipe will be installed under favorable ambient conditions, per pipe manufacturer's specifications.

Wall Crushing

After construction is complete, all portions of proposed gravity sewer line located within the 5-year floodplain will be encased in concrete.

Tensile Strength

The information below is from "The Uni-Bell Handbook of PVC Pipe: Design and Construction" Table 2.1 pages 14-15. This applies to all PVC SDR-26 pipe.

Pipe Material: ***PVC SDR 26*** Tensile Strength: ***7,000*** Cell Class (PVC only) ***12454***

Strain

The conditions of this installation are such that strain-related failure will not be a problem. Strain is generally not a performance-limiting factor for buried PVC pipe or a design-limiting criterion for PVC pipes according to the Uni-Bell Handbook of PVC Pipe (Chapter VII, Pages 255 and 257). As pipe deflection will be below 5%, strain-related failure is not anticipated.

Modulus of Soil Reaction

The modulus of soil reaction for the bedding material, $E_{b,}$ is **400 psi**.

This value was determined using the "Table 1: Soil Classification Chart" and "Table 2: Soil Classes" from ASTM D2321-11 and Table 7.3 "Average Values of Modulus of Soil Reaction, E" from "The Uni-Bell Handbook of PVC Pipe: Design and Construction" attached in Appendix A of this subsection. Class III material was chosen. As the secondary backfill (Class III) has a lower Modulus of Soil Reaction than initial backfill (Class I), its value was used in the calculations that follow. Class III on Table 2 corresponds to coarse-grained soils with fines (GM, GC, SM or SC) and sandy or gravelly fine-grained soils (CL or ML). On Table 7.3, coarse-grained soils with fines at a slight compaction have an E' equal to 400 psi.

The modulus of soil reaction for the in-situ soil, E'_n, is **3,000 psi**

This value was determined using the "Table 1: Soil Classification Chart" and "Table 2: Soil Classes" from ASTM D 2321-11 and Table 7.3 "Average Values of Modulus of Soil Reaction, E" from "The Uni-Bell Handbook of PVC Pipe: Design and Construction" attached in Appendix A of this subsection. Class I material was chosen, which includes crushed rock as shown on Table 2. Compacted crushed rock on Table 7.3 has an E' equal to 3,000 psi. Values in Table 7.3 are based on empirical data and derived from laboratory and field tests for buried pipe.

Bedding to in-situ soil modulus of soil reaction ratio = E_b/E'_n = **400 psi/3,000 psi = 0.13**

Zeta Calculation

Where native soil is significantly weaker than bedding material, or where predicted deflection approaches 5%, the effect of native soil must be quantified using Leonhardt's Zeta factor. If the ration of bedding modulus to soil modulus is not equal to 1.0, a zeta factor must be calculated by using the equations below, where zeta is a factor, which corrects for the effect of in-situ soil on pipe stability (Uni-Bell Handbook of Pipe, page 267). To calculate zeta, directly use the formulas below. The calculations that are done to determine the zeta factors for the different pipe diameters must be included with this submittal.

$$zeta = \frac{1.44}{f + (1.44 - f) * (E_b / E_{n'})}$$ *Equation 9*

$$zeta = \frac{1.44}{1.38 + (1.44 - 1.38) * 0.13} = 1.04\ (6"PVC, SDR26, NR)$$

$$f = \frac{b/d_a - 1}{1.154 + 0.444 * (b/d_a - 1)}$$ *Equation 10*

$$f = \frac{(32/6.275 - 1)}{1.154 + 0.444(32/6.275 - 1)} = 1.38\ (6"PVC, SDR26, NR)$$

Where:

- f = Pipe/trench width coefficient
- b = Trench width (in)
- d_a = Pipe diameter (in)
- E_b = Modulus of soil reaction for the bedding material (psi)
- E'_n = Modulus of soil reaction for the in-situ soil (psi)

Pipe Diameter: ***6" (NR)*** Trench Width: ***32"*** Zeta: ***1.04***

Pipe Stiffness

Pipe stiffness is based on National Reference Standards and manufacturer's data. Please see Table 7.1 of the "The Uni-Bell Handbook of PVC Pipe: Design and Construction" listing the pipe stiffness of 6", 8", 10", & 12" PVC SDR 26 as 115 psi for E = 400,000 psi.

Pipe Diameter: ***6"*** Pipe Material: ***PVC SDR 26*** Ps: ***115 psi***

Deflection

Maximum allowable deflection in installed lines is 5% (per 30 TAC 217), as determined by the deflection analysis and verified by a mandrel test. It is recommended that the percent of vertical deflection is below this range; however, a 7.5% deflection limit (recommended by ASTM D3034) provides a conservative factor of safety against structural failure (Handbook of PVC Pipe, page 249).

Note: Per Table 7.2 attached in Appendix A of the SCS Application, K = 0.096 when the bedding angle is 90 degrees.

$$\Delta Y / D(\%) = \frac{K * (L_p + L_1) * 100}{(0.149 * P_s) + (0.061 * zeta * E_b)}$$ *Equation 11*

$$\Delta Y/D(\%) = \frac{(0.096)(19.86 + 0) * 100}{(0.149 * 115) + (0.061 * 1.04 * 400)} = 4.48\% \; for \; 6" \; NR \; pipe$$

$$L_p = \frac{\gamma_s * H}{144}$$ *Equation 12*

$$L_p = (143 * 20)/144 = 19.86 \; psi$$

ΔY/D (%) = Predicted % vertical deflection under load

ΔY = Change in vertical pipe diameter under load

D = Undeflected mean pipe diameter (in)

K = Bedding angle constant

γ_s = Unit weight of soil (pcf)

H = Depth of burial (ft) from ground surface to crown of pipe

L_p = Prism load (psi)

	Type of Pipe Material	P_s (psi)	Zeta Factor Assumed or Calculated	E_b (psi)	% Deflection
Pipe Diameter 1	***6" PVC SDR 26 (NR)***	***115***	***1.04***	***400***	***4.48***

Per ASTM D3034, 7.5% deflection is permitted.

All pipes proposed for this project have a maximum predicted deflection below 5.0%

Signature, Seal and Date of the Texas Professional Engineer Below:

STATE OF TEXAS
MICHAEL S. FISHER
87704
LICENSED
PROFESSIONAL ENGINEER
10/9/24

APPENDIX A

Appendix A-Flow Velocity Table

Flow Velocity (Flowing Full) All gravity sewer lines on the Edwards Aquifer Recharge Zone shall be designed and constructed with hydraulic slopes sufficient to give a velocity when flowing full of not less than 2.0 feet per second, and not greater than 10 feet per second. The grades shown in the following table are based on Manning's formula and an n factor of 0.013 and shall be the minimum and maximum acceptable slopes unless provisions are made otherwise.

Table 10 - Slope Velocity

Pipe Diameter(Inches)	*% Slope required for minimum flow velocity of 2.0 fps*	*% Slope which produces flow velocity of 10.0 fps*
6	0.50	12.35
8	0.33	8.40
10	0.25	6.23
12	0.20	4.88
15	0.15	3.62
18	0.11	2.83
21	0.09	2.30
24	0.08	1.93
27	0.06	1.65
30	0.055	1.43
33	0.05	1.26
36	0.045	1.12
39	0.04	1.01
>39	*	*

**For lines larger than 39 inches in diameter, the slope may be determined by Manning's formula (as shown below) to maintain a minimum velocity greater than 2.0 feet per second when flowing full and a maximum velocity less than 10 feet per second when flowing full.*

$$v = \frac{1.49}{n} \times R_h^{0.67} \times \sqrt{S}$$

Figure 1 - Manning's Formula

Where:

v = velocity (ft/sec)
n = Manning's roughness coefficient (0.013)
Rh = hydraulic radius (ft)
S = slope (ft/ft)

Raba Kistner

Raba-Kistner Consultants, Inc.
12821 W. Golden Lane
P.O. Box 690287, San Antonio, TX 78269-0287
(210) 699-9090 • FAX (210) 699-6426
www.rkci.com

January 14, 2009

Charles P. "Frosty" Forster, P.E., P.G.
Pape Dawson Engineers
555 East Ramsey
San Antonio, Texas 78216

RE: Soil Unit Weight Values for Backfill Materials
Various Projects
San Antonio, Texas

Dear Mr. Forster:

Raba-Kistner Consultants Inc. (R-K) is pleased to submit this letter providing general guidance for selecting design soil unit weights for use in utility trench design.

In general, the following table contains a list of the frequently used trench backfill materials in the San Antonio area. The table also contains approximate values for the soil dry unit weight, moist unit weight and saturated unit weight for these materials assuming 90 to 95 percent compaction utilizing a standard Proctor (ASTM D 698.)

MATERIAL DESCRIPTION	DRY UNIT WEIGHT, PCF	MOIST UNIT WEIGHT, PCF	SATURATED UNIT WEIGHT, PCF
TxDOT TEX-113E Type A, Gr. 1 or 2	130	137	143
TxDOT TEX-113E Type A, Gr. 3 thru 5	128	135	143
Limestone Millings	115	124	134
Gravelly Clay	110	120	132
Clay	100	120	127
Clayey Sand	95	106	123
Gravel (Clean)	115	120	134
Sand (Clean)	92	98	120
Pit Run Gravel	127	137	142

We appreciate the opportunity to be of service to you. If you have any questions or need additional assistance, please call.

Very truly yours,

RABA-KISTNER CONSULTANTS, INC.

STATE OF TEXAS
CHRIS L. SCHULTZ
80680
LICENSED
PROFESSIONAL ENGINEER

1/14/09

Chris L. Schultz, P.E.
Senior Vice President

CLS/mem

O:\Admin - Non Project\San Antonio\PD back fill letter.doc

Raba Kistner

SOIL CLASSIFICATION CHART

From ASTM D2321-11: Standard Practice for Underground Installation of Thermoplastic Pipe for Sewers and Other Gravity-Flow Applications

TABLE 1 Soil Classification Chart (see Classification D2487)

	Criteria for Assigning Group Symbols and Group Names Using Laboratory Tests[A]				Soil Classification	
					Group Symbol	Group Name[B]
Coarse-Grained Soils	Gravels	Clean gravels	$C \geq 4$ and $1 \leq Cc \leq 3^C$		GW	Well-graded gravel[D]
More than 50% retained on No. 200 sieve	More than 50% of coarse fraction retained on No. 4 sieve	Less than 5% of fines[E]	Cu < 4 and/or 1> Cc>3[C]		GP	Poorly graded gravel[D]
		Gravels with more than 12% fines[E]	Fines classify as ML or MH		GM	Silty gravel[DFG]
			Fines classify as CL or CH		GC	Clayey gravel[DFG]
	Sands	Clean sands	$Cu \geq 6$ and $1 \leq Cc \leq 3^C$		SW	Well-graded sand[H]
	50% or more of coarse fraction passes on No. 4 sieve	Less than 5% fines[I]	Cu < 6 and/or 1 > Cc > 3[C]		SP	Poorly graded sand[H]
		Sand with fines	Fines classify as ML or MH		SM	Silty sand[FGH]
		More than 12% fines[I]	Fines classify as CL or CH		SC	Clayey sand[FGH]
Fine-Grained Soils	Silts and clays	Inorganic	PI > 7 and plots on or above "A" line[J]		CL	Lean clay[KLM]
50% or more passes the No. 200 Sieve	Liquid limit less than 50		PI < 4 and plots below "A" line[J]		ML	silt[KLM]
		Organic	Liquid Limit-Oven dried	<0.75	OL	Organic clay[KLMN]
			Liquid Limit-Not dried			Organic silt[KLMO]
	Silts and clays	Inorganic	PI plots on or above "A" line		CH	Fat clay[KLM]
	Liquid limit 50 or more		Plots below "A" line		MH	Elastic silt[KLM]
		Organic	Liquid Limit-Oven Dried	<0.75	OH	Organic clay[KLMP]
			Liquid Limit-Not Dried			Organic silt[KLMQ]
Highly organic soils	Primarily organic matter, dark in color, and organic odor				PT	peat

[A] Based on the material passing the 3-in. (75-mm) sieve.
[B] If field sample contained cobbles or boulders, or both, add "with cobbles or boulders, or both" to group name.
[C] $Cu = D_{60} / D_{10}$

$$Cc = \frac{(D_{30})^2}{D_{10} x D_{60}}$$

[D] If soil contains ≥15 % sand, add "with sand" to group name.
[E] Gravels with 5 to 12 % fines require dual symbols:
GW-GM well-graded gravel with silt:
GW-GC well-graded gravel with clay
GP-GM poorly graded gravel with silt
GP-GC poorly graded gravel with clay
[F] If fines classify as CL-ML, use dual symbol GC-GM, or SC-SM.
[G] If fines are organic, add "with organic fines" to group name.
[H] If soil contains ≥ 15 % gravel, add "with gravel" to group name.
[I] Sands with 5 to 12 % fines require dual symbols:
SW-SM well graded sand with silt
SW-SC well-graded sand with clay
SP-SM poorly graded sand with silt
SP-SC poorly graded sand with clay
[J] If Atterberg limits plot in hatched area, soil is a CL-ML, silty clay (see Test Method D4318).
[K] If soil contains 15 to 29 % plus No. 200, add "with sand" or "with gravel", whichever is predominant.
[L] If soil contains ≥ 30 % plus No. 200, predominantly sand, add "sandy" to group name.
[M] If soil contains ≥ 30 % plus No. 200, predominantly gravel, add "gravelly" to group name.
[N] PI ≥ 4 and plots on or above "A" line.
[O] PI < 4 or plots below "A" line.
[P] PI plots on or above "A" line.
[Q] PI plots below "A" line.

SOIL CLASSIFICATION CHART

From ASTM D2321-11: Standard Practice for Underground Installation of Thermoplastic Pipe for Sewers and Other Gravity-Flow Applications

TABLE 2 Soil Classes

Soil Group [A,B]	Soil Class	American Association of State Highway and Transportation Officials (AASHTO) Soil Groups [C]
Crushed rock, angular [D], 100% passing 1-1/2 in. sieve, </=15 % passing #4 sieve, </= 25 % passing 3/8 in. sieve and </= 12 % passing #200 sieve	Class I	--
Clean, coarse grained soils: SW, SP, GW, GP or any soil beginning with one of these symbols with </= 12 % passing #200 sieve[E,F]	Class II	A1, A3
Coarse grained soils with fines: GM, GC, SM, SC or any soil beginning with one of these symbols, containing > 12 % passing #200 sieve; Sandy or gravelly fine-grained soils: CL, ML, or any soil beginning with one of these symbols, with >/= 30 % retained on #200 sieve	Class III	A-2-4, A-2-5, A-2-6, or A-4 or A-6 soils with more than 30% retained on #200 sieve
Fine-grained soils: CL, ML, or any soil beginning with one of these symbols, with <30 % retained on #200 sieve	Class IV	A-2-7, or A-4, or A-6 soils with 30% or less retained on #200 sieve
MH, CH, OL, OH, PT	Class V Not for use as embedment	A5, A7

[A] See Classification D2487, Standard Classification of Soils for Engineering Purposes (Unified Soil Classification System).
[B] Limits may be imposed on the soil group to meet project or local requirements if the specified soil remains within the group. For example, some project applications require a Class I material with minimal fines to address specific structural or hydraulic conditions and the specification may read "Use Class I soil with a maximum of 5% passing the #200 sieve."
[C] AASHTO M145, Classification of Soils and Soil Aggregate Mixtures.
[D] All particle face shall be fractured.
[E] Materials such as broken coral, shells, and recycled concrete, with $\leq$ = 12% passing a No. 200 sieve, are considered to be Class II materials. These materials should only be used when evaluated and approved by the Engineer.
[F] Uniform fine sands (SP) with more than 50% passing a No. 100 sieve (0.006 in., 0.15 mm) are very sensitive to moisture and should not be used as backfill unless specifically allowed in the contract documents. If use of these materials is allowed, compaction and handling procedures should follow the guidelines for Class III materials.

SOIL CLASSIFICATION CHART

From ASTM D2321-11: Standard Practice for Underground Installation of Thermoplastic Pipe for Sewers and Other Gravity-Flow Applications

TABLE 3 Recommendations for Installation and Use of Soils and Aggregates for Foundation and Pipe-Zone Embedment

Soil Class[A]	Class I[B]	Class II	Class III	Class IV
General Recommendations and Restrictions	Acceptable and common where no migration is probable or when combined with a geotextile filter media. Suitable for use as a drainage blanket and under drain where adjacent material is suitably graded or when used with a geotextile filter fabric (see X1.8).	Where hydraulic gradient exists check gradation to minimize migration. Clean groups are suitable for use as a drainage blanket and underdrain (see Table 2). Uniform fine sands (SP) with more than 50 % passing a #100 sieve (0.006 in., 0.15 mm) behave like silts and should be treated as Class IV soils.	Do not use where water conditions in trench prevent proper placement and compaction. Not recommended for use with pipes with stiffness of 9 psi or less.	Difficult to achieve high-soil stiffness. Do not use where water conditions in trench prevent proper placement and compaction. Not recommended for use with pipes with stiffness of 9 psi or less.
Foundation	Suitable as foundation and for replacing over-excavated and unstable trench bottom as restricted above.	Suitable as foundation and for replacing over-excavated and unstable trench bottom as restricted above. Install and compact in 12 in. (300 mm) maximum layers.	Suitable for replacing over-excavated trench bottom as restricted above. Install and compact in 6 in. (150 mm) maximum layers.	Suitable for replacing over-excavated trench bottom as restricted above. Install and compact in 6-in (150 mm) maximum layers.
Pipe Embedment	Suitable as restricted above. Work material under pipe to provide uniform haunch support.	Suitable as restricted above. Work material under pipe to provide uniform haunch support.	Suitable as restricted above. Difficult to place and compact in the haunch zone.	Suitable as restricted above. Difficult to place and compact in the haunch zone.
Embedment Compaction: Min Recommended Percent Compaction, SPD[D]	See Note[C]	85 % (SW and SP soils) For GW and GP soils See Note[E]	90 %	95 %
Relative Compactive Effort Required to Achieve Minimum Percent Compaction	Low	Moderate	High	Very high
Compaction Methods	Vibration or impact	Vibration or impact	Impact	Impact
Required Moisture Control	None	None	Maintain near optimum to minimize compactive effort	Maintain near optimum to minimize compactive effort

[A] Class V materials are unsuitable as embedment. They may be used as final backfill as permitted by the engineer.
[B] Class I materials have higher stiffness than Class II materials, but data on specific soil stiffness of placed, uncompacted Class I materials can be taken equivalent to Class II materials compacted to 95% of maximum standard Proctor density (SPD95), and the soil stiffness of compacted Class I materials can be taken equivalent to Class II materials compacted to 100% of maximum standard Proctor density (SPD100). Even if placed uncompacted (that is, dumped), Class I materials should always be worked into the haunch zone to assure completed placement.
[C] Suitable compaction typically achieved by dumped placement (that is, uncompacted but worked into haunch zone to ensure complete placement).
[D] SPD is standard Proctor density as determined by Test Method D698.
[E] Place and compact GW and GP soils with at least two passes of compaction equipment.

TABLE 6.6
LIVE LOADS ON PVC PIPE
From Uni-Bell Handbook of PVC Pipe: Design and Construction, Fourth Edition (2001)

Height of Cover (ft)	Live Load Transferred to Pipe, lb/in^2			Height of Cover (ft)	Live Load Transferred to Pipe, lb/in^2		
	Highway H20[1]	Railway E80[2]	Airport [3]		Highway H20[1]	Railway E80[2]	Airport [3]
1	12.50			14	*	4.17	3.06
2	5.56	26.39	13.14	16	*	3.47	2.29
3	4.17	23.61	12.28	18	*	2.78	1.91
4	2.78	18.40	11.27	20	*	2.08	1.53
5	1.74	16.67	10.09	22	*	1.91	1.14
6	1.39	15.63	8.79	24	*	1.74	1.05
7	1.22	12.15	7.85	26	*	1.39	*
8	0.69	11.11	6.93	28	*	1.04	*
10	*	7.64	6.09	30	*	0.69	*
12	*	5.56	4.76	35	*	*	*
				40	*	*	*

[1] *Simulates 20 ton truck traffic + impact (Source: ASTM A 796)*
[2] *Simulates 80,000 lb/ft railway load + impact (Source: ASTM A 796)*
[3] *180,000 lbs. dual tandem gear assembly. 26 inch spacing between tires and 66 inch center-to-center spacing between fore and aft tires under a rigid pavement 12 inches thick + impact.*
* *Negligible live load influence.*

FIGURE 7.4
BEDDING ANGLE
From Uni-Bell Handbook of PVC Pipe: Design and Construction, Fourth Edition (2001)

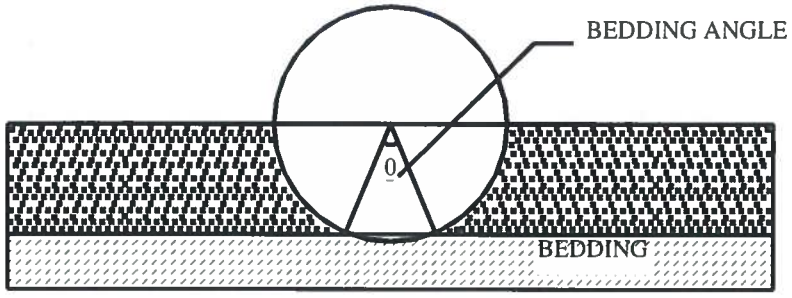

TABLE 7.2
VALUES OF BEDDING CONSTANT, K

BEDDING ANGLE (DEGREES)	K
0	0.110
30	0.108
45	0.105
60	0.102
90	0.096
120	0.090
180	0.083

TABLE 7.3
AVERAGE VALUES OF MODULUS OF SOIL REACTION, E'
(For Initial Flexible Pipe Deflection)
From Uni-Bell Handbook of PVC Pipe: Design and Construction, Fourth Edition (2001)

Soil type-pipe bedding material (Unified Classification System[a]) (1)	E' for Degree of Compaction of Bedding, in pounds per square inch			
	Dumped (2)	Slight, < 85% Proctor, <40% relative density (3)	Moderate, 85%-95% Proctor, 40%-70% relative density (4)	High, >95% Proctor, >70% relative density (5)
Fine-grained Soils (LL>50)[b] Soils with medium to high plasticity, CH, MH, CH-MH	No data available; consult a competent soils engineer; Otherwise use E' = 0			
Fine-grained Soils (LL<50) Soils with medium to no plasticity, CL, ML, ML-CL, with less than 25% coarse-grained particles	50	200	400	1,000
Fine-grained Soils (LL<50) Soils with medium to no plasticity, CL, ML, ML-CL, with more than 25% coarse-grained particles Coarse-grained Soils with Fines GM, GC, SM, SC[c] contains more than 12% fines	100	400	1,000	2,000
Coarse-grained Soils with Little or no Fines GW, GP, SW, SP[c] contains less than 12% fines	200	1,000	2,000	3,000
Crushed Rock	1,000	3,000	3,000	3,000
Accuracy in Terms of Percentage Deflection[d]	± 2	± 2	± 1	± 0.5

[a]ASTM Designation D 2487, USBR Designation E-3.
[b]LL = Liquid limit.
[c]Or any borderline soil beginning with one of these symbols (i.e. GM-GC, GC-SC).
[d]For ± 1% accuracy and predicted deflection of 3%, actual deflection would be between 2% and 4%
Note: Values applicable only for fills less than 50 ft (15 m). Table does not include any safety factor. For use in predicting initial deflections only, appropriate Deflection Lag Factor must be applied for long-term deflections. If bedding falls on the borderline between two compaction categories, select lower E' value or average the two values. Percentage Proctor based on laboratory maximum dry density from test standards using about 12,500 ft-lb/cu ft (598,000 J/m^3) (ASTM D 698, AASHTO T-99, USBR Designation E-11). 1 psi = 6.9 kPa.

SOURCE: "Soil Reaction for Buried Flexible Pipe" by Amster K. Howard, U.S. Bureau of Reclamation, Denver, Colorado. Reprinted with permission from American Society of Civil Engineers.

PRE-CAST MANHOLE DRAWINGS & SPECIFICATIONS

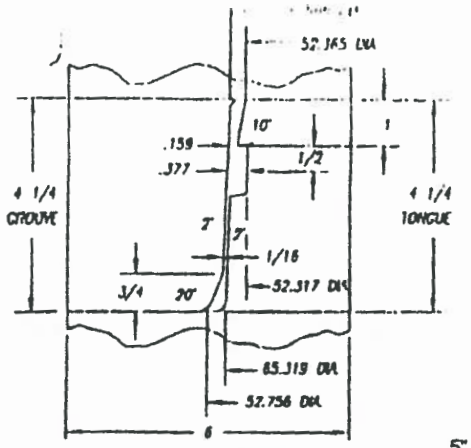

"78" STYLE JOINT
SCALE: 3/8=1

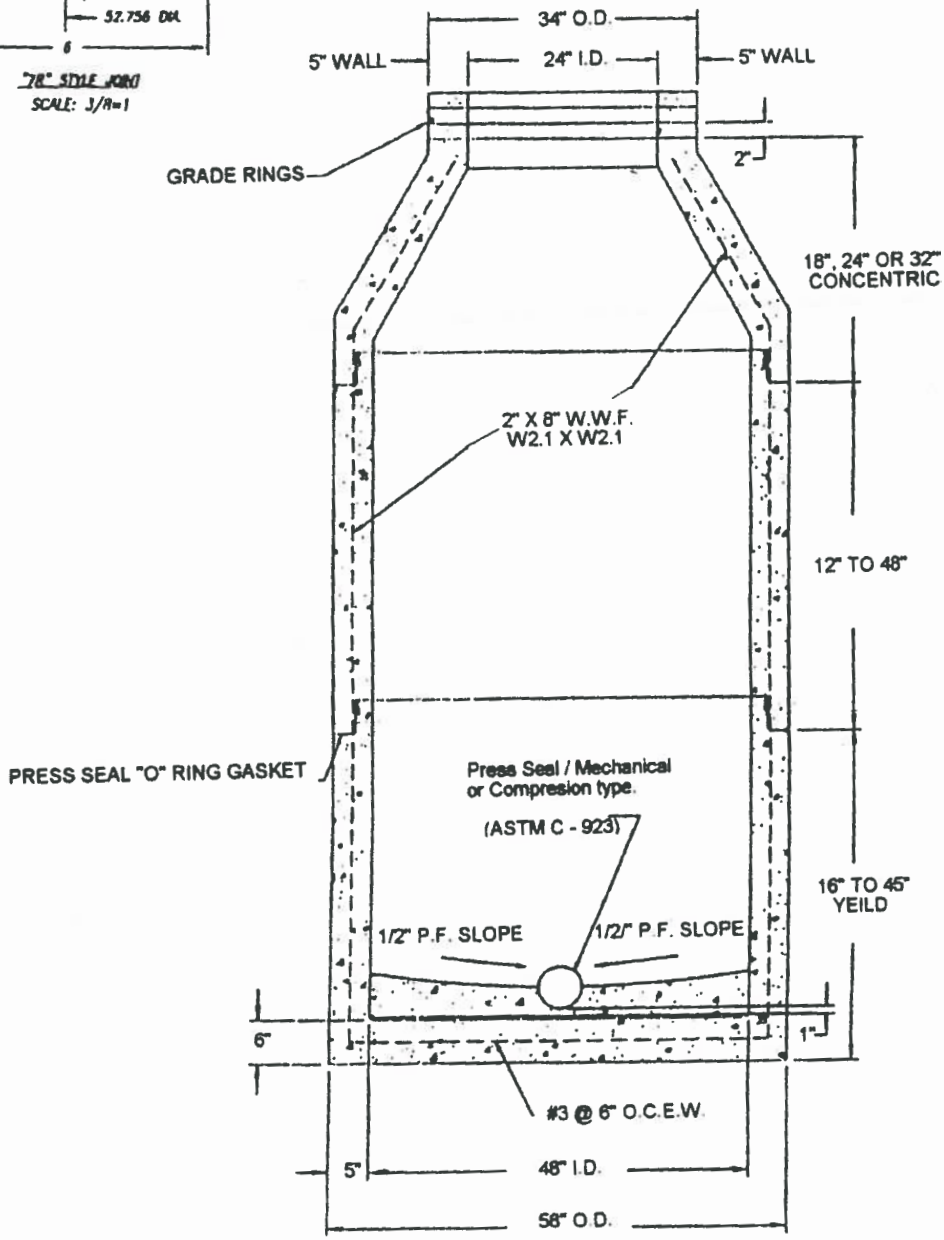

ALL MATERIALS MEET
OR EXCEED ASTM C-478

CHARLOTTES CONCRETE

48 x 45 BASE/STACK-UP
w/ FLAT TOP "R" JOINT

CHARLOTTES

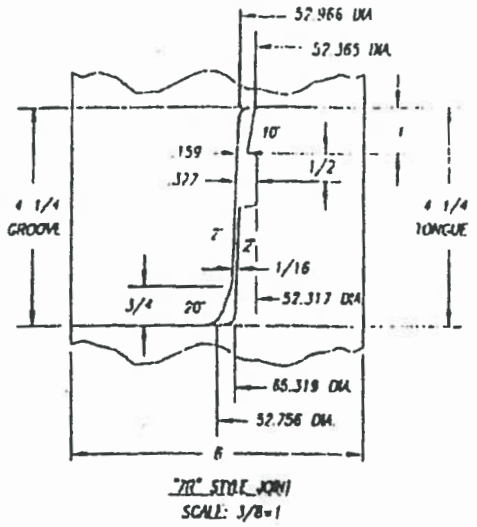

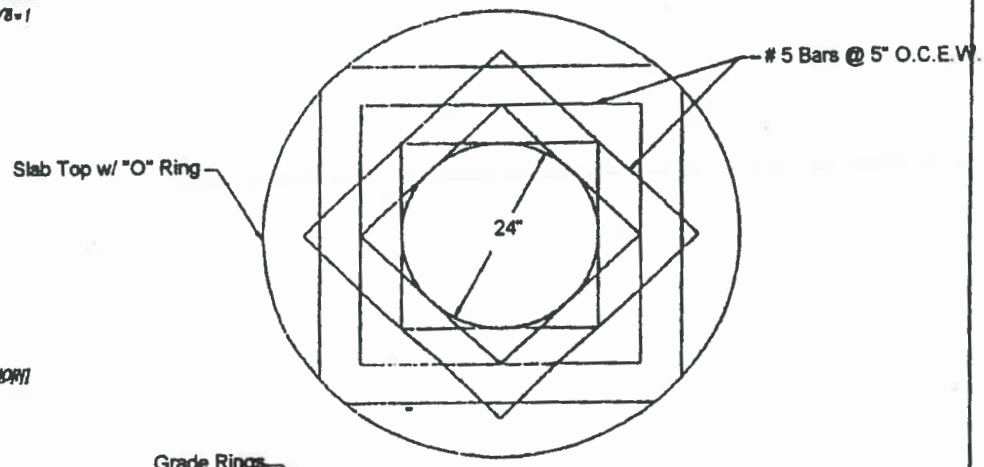

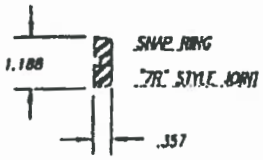

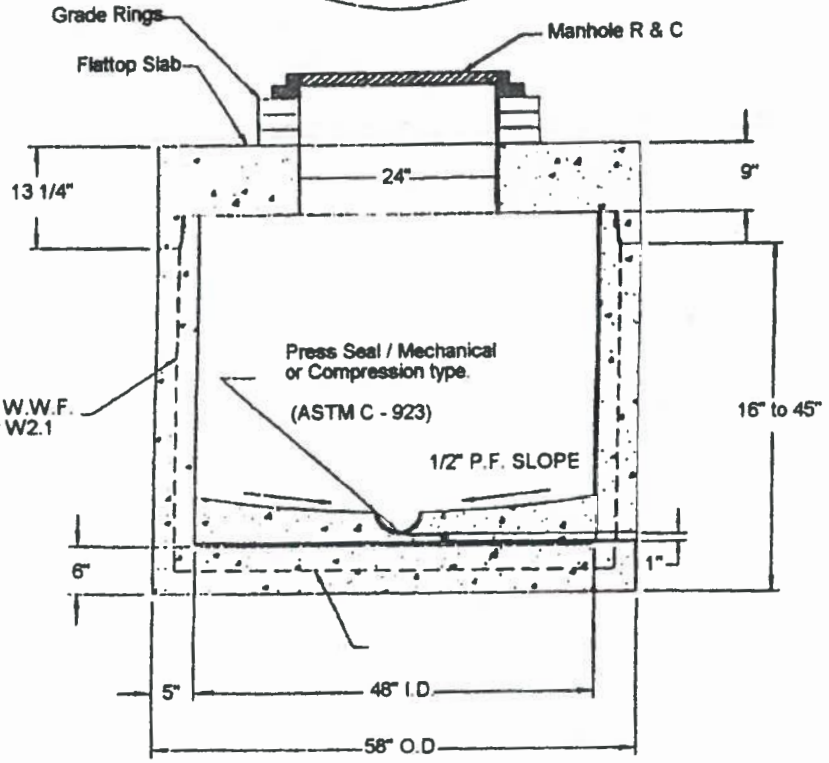

CHARLOTTES CONCRETE

48 x 45 BASE/STACK-UP
W/ FLAT TOP TR. JOINT

CHARLOTTES

Concrete @ 4000 psi
Steel Grade 60
ASTM C - 478
H - 20 Traffic Rated

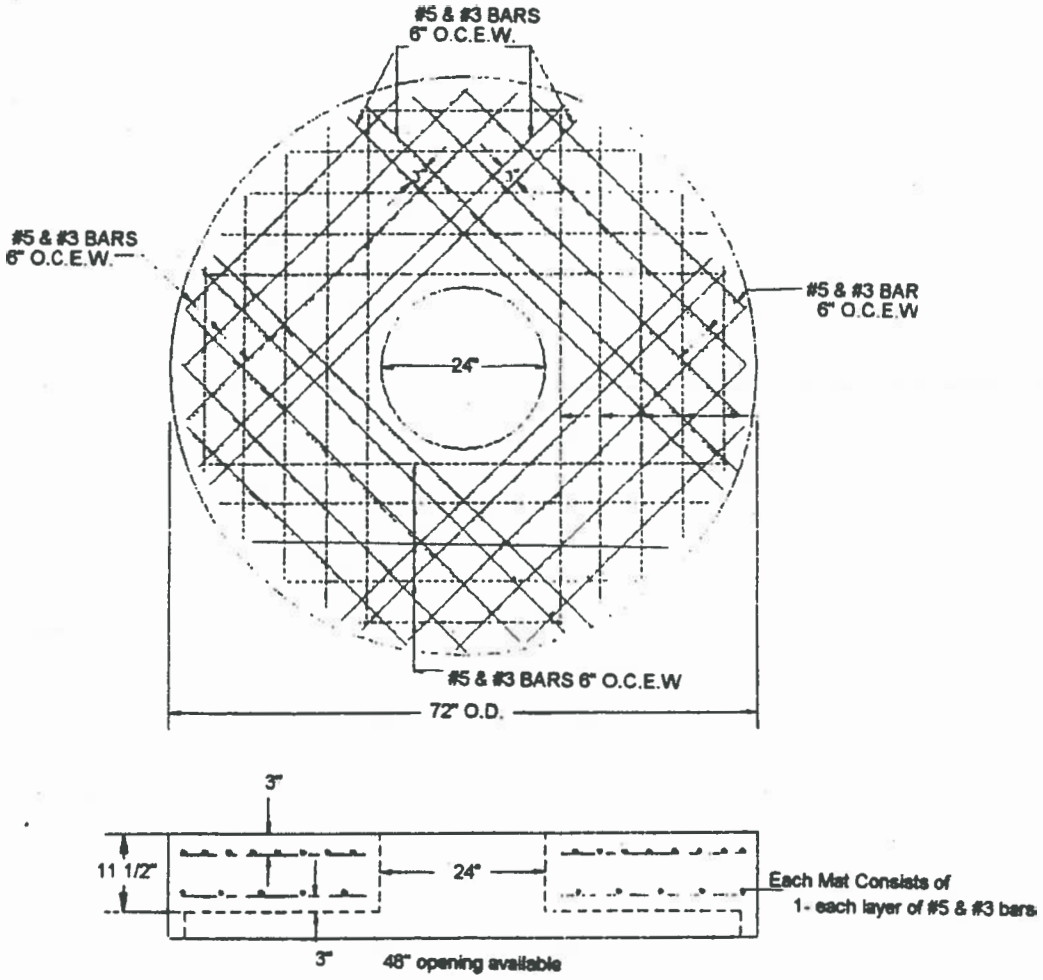

(N.T.S.)

Charlotte's Concrete, Inc.

60 " I.D.
FLATTOP SLAB

CONCRETE @ 4000psi
STEEL GRADE 60
ASTM C - 478
H - 20 TRAFFIC RATED

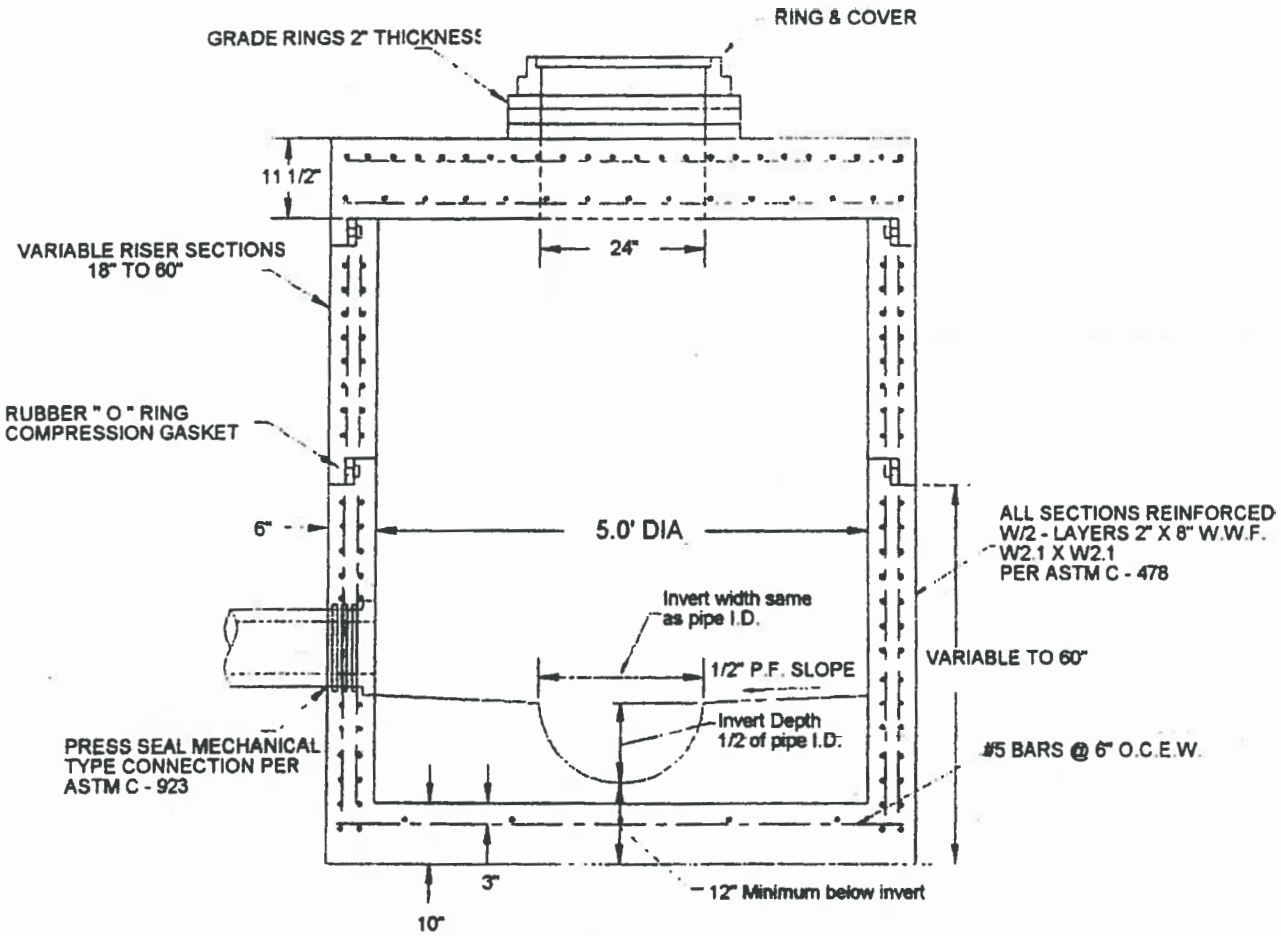

(N.T.S.)

Charlotte's Concrete, Inc.

60" DIA. MANHOLE W/ FLATTOP

CONCRETE @ 4000psi
STEEL GRADE 60
ASTM C - 478
H - 20 TRAFFIC RATED

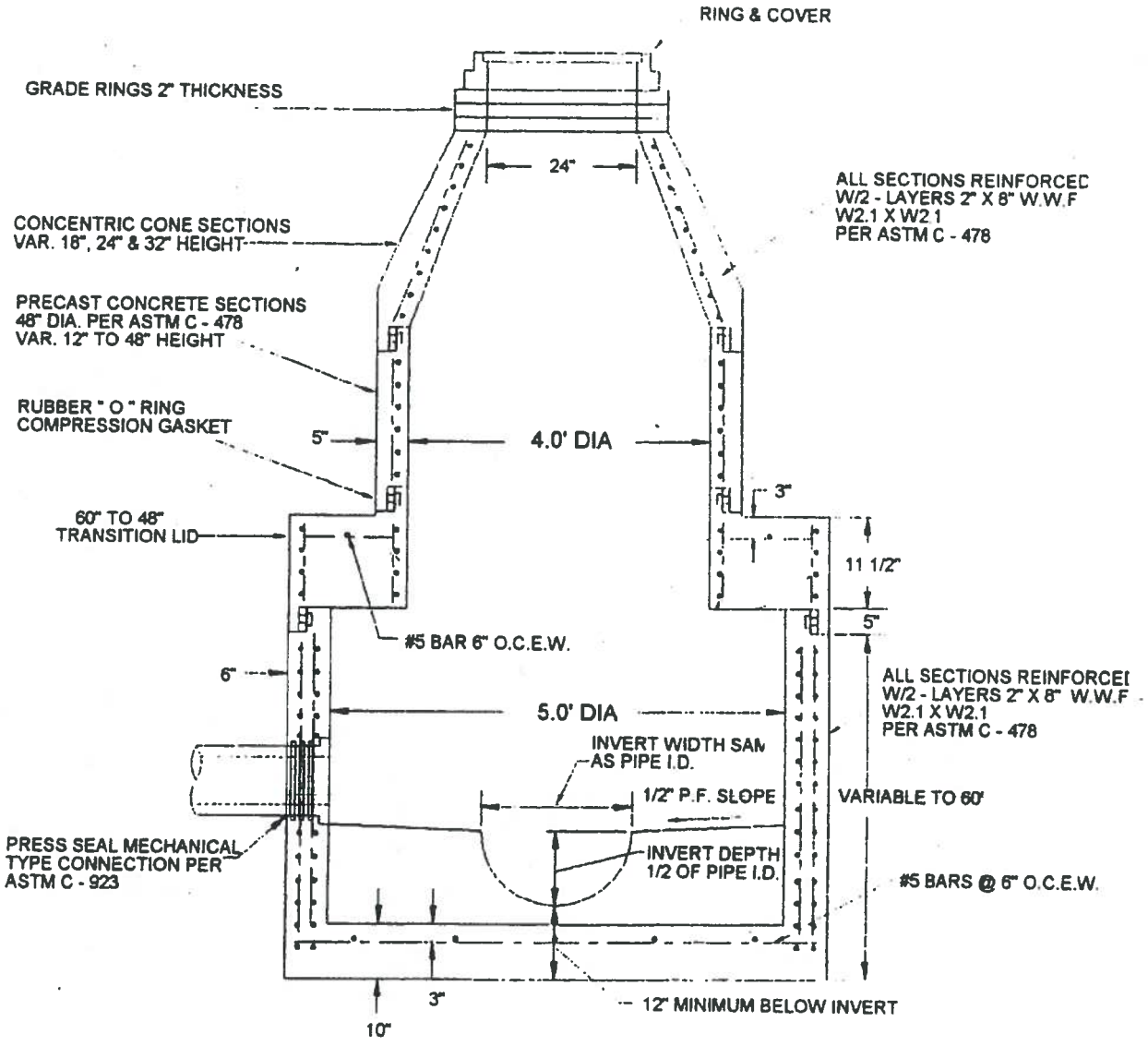

(N.T.S.)

Charlotte's Concrete, Inc.

60" DIA. M.H. TO
48" DIA. M.H.

Concrete @ 4000 psi
Steel Grade 60
ASTM C - 478
H - 20 Traffic Rated

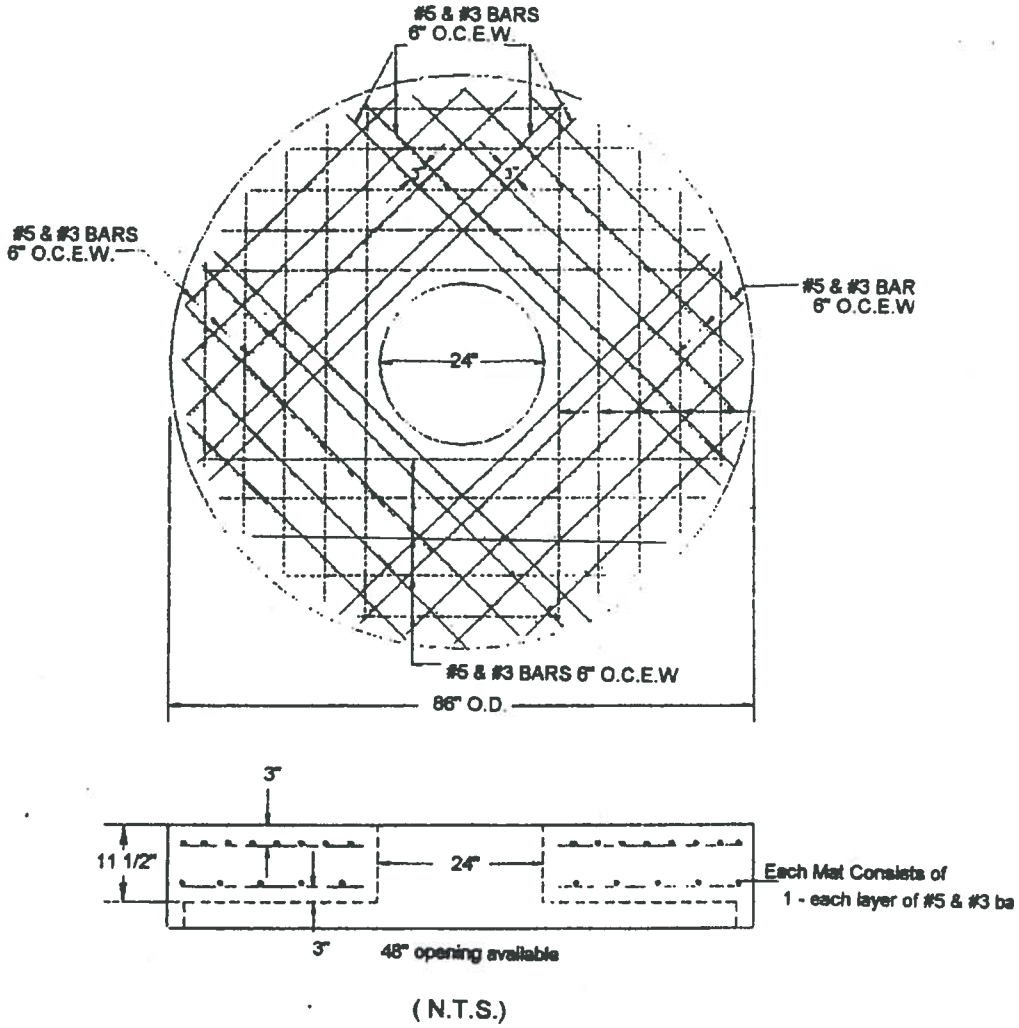

(N.T.S.)

Charlotte's Concrete, Inc.

72" I.D. FLATTOP SLAB

CONCRETE @ 4000psi
STEEL GRADE 60
ASTM C - 478
H - 20 TRAFFIC RATED

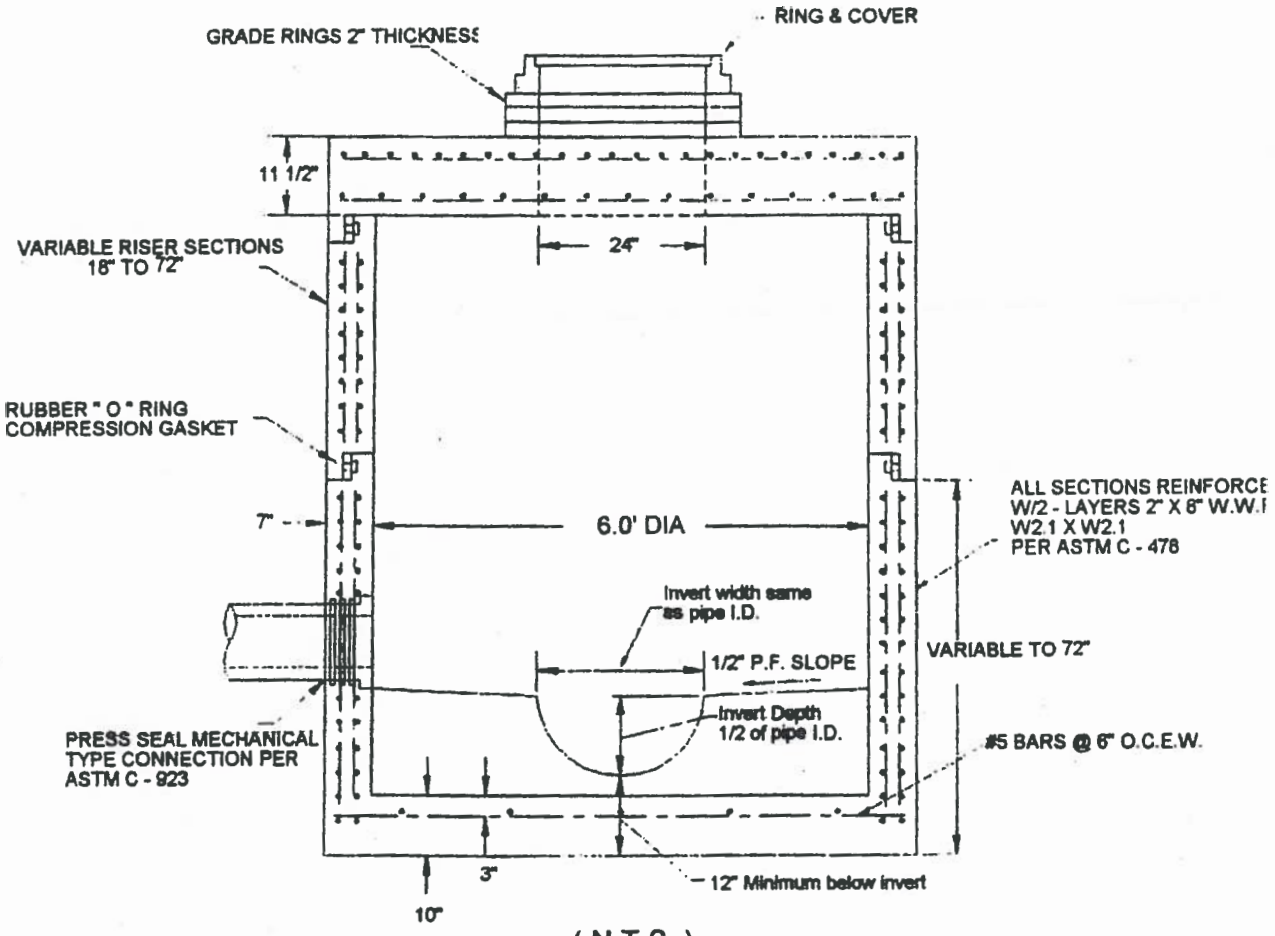

(N.T.S.)

Charlotte's Concrete, Inc.

72" DIA. MANHOLE
W/ FLATTOP

CONCRETE @ 4000psi
STEEL GRADE 60
ASTM C - 478
H - 20 TRAFFIC RATED

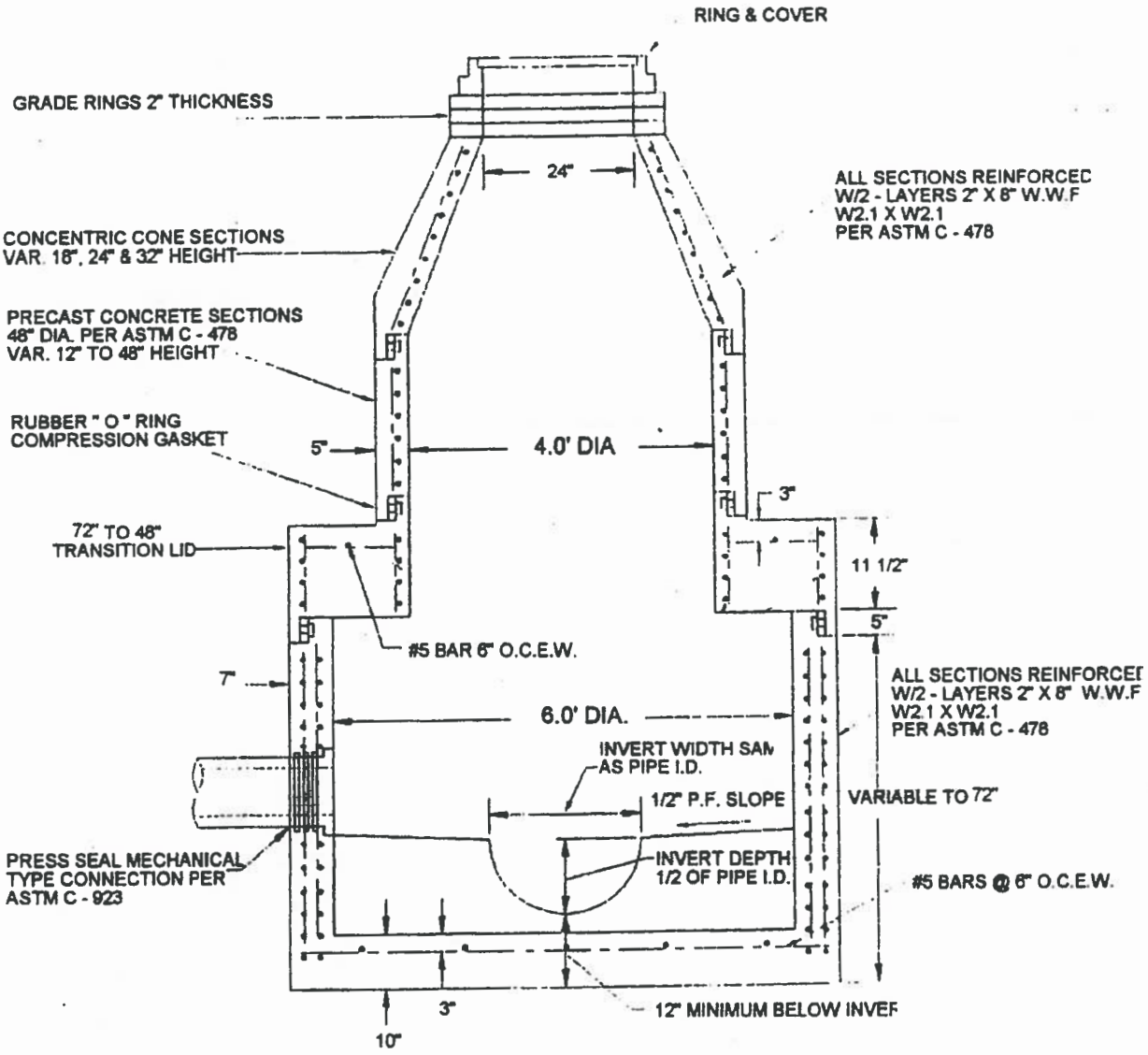

(N.T.S.)

Charlotte's Concrete, Inc.

72" DIA. M.H. TO
48" DIA. M.H.

\APPROVAL\CONCENTRIC.DWG

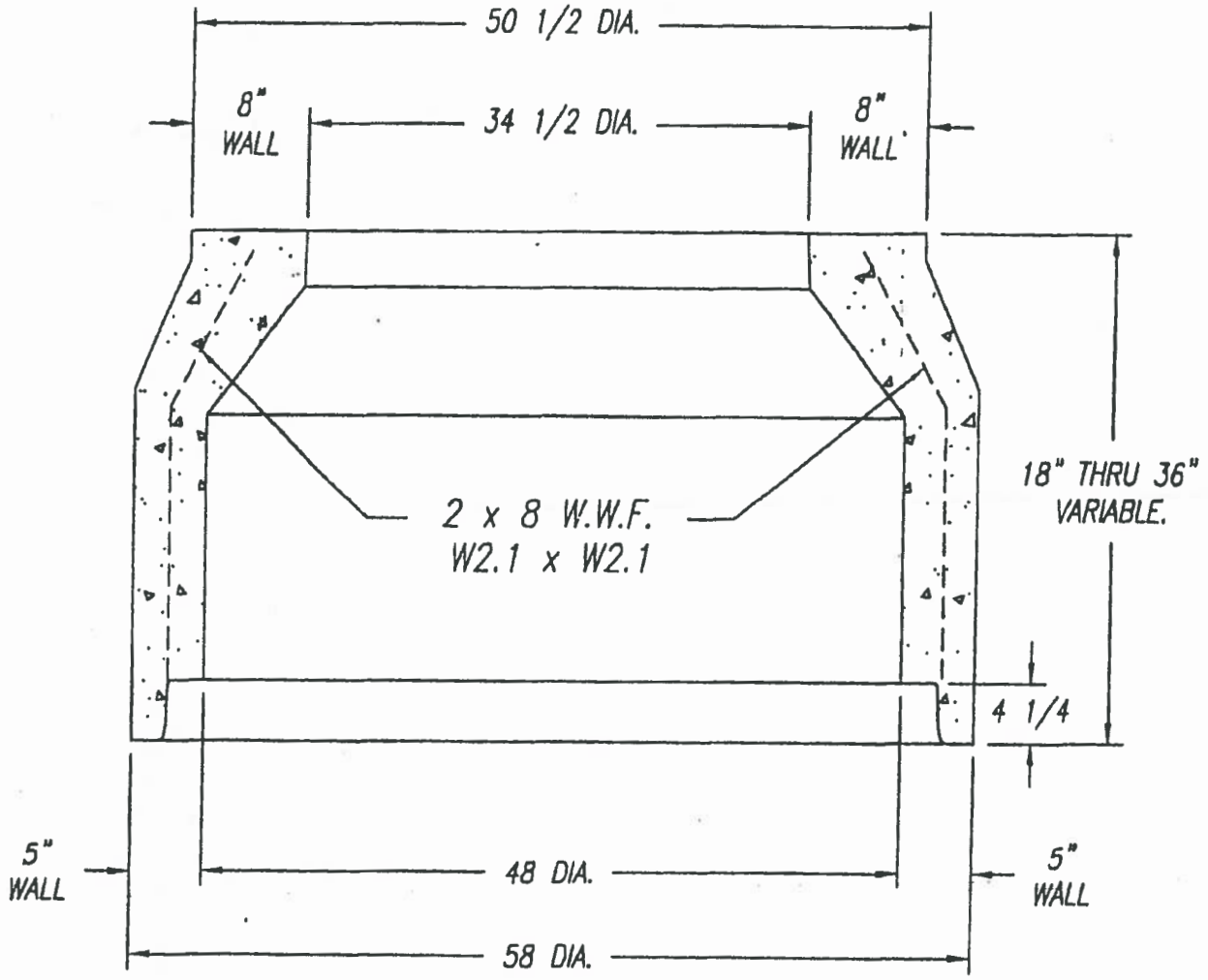

(7R JOINT)

REF. FORM DWG. 3-303-5561

INTERNATIONAL PIPE MACHINERY CORP.

QUINN

MACHINE & FOUNDRY CORP.

A MEMBER OF THE BESSER FAMILY OF COMPANIES

BOONE, IOWA U.S.A.

THIS PRINT IS THE PROPERTY OF INTERNATIONAL PIPE MACHINERY CORP. IT IS CONFIDENTIAL AND NOT TO BE REPRODUCED WITHOUT OUR EXPRESSED PERMISSION AND MUST BE RETURNED UPON REQUEST.

CHARLOTTES

48 x 5 x 34 1/2 x 8 x 36 & 18

CONCENTRIC CONCRETE SECTION

DRAFTER	JJK	4/19/02	CONCENTRIC	REV.
CHECKED				
SCALE:	1/12" = 1"			

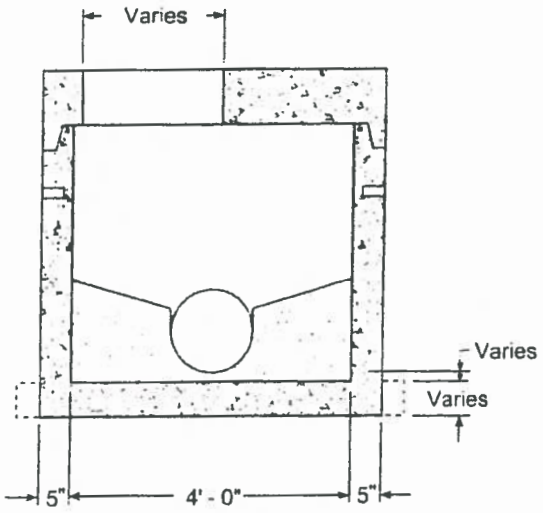

Flattop Illustration
for Shallow Manhole

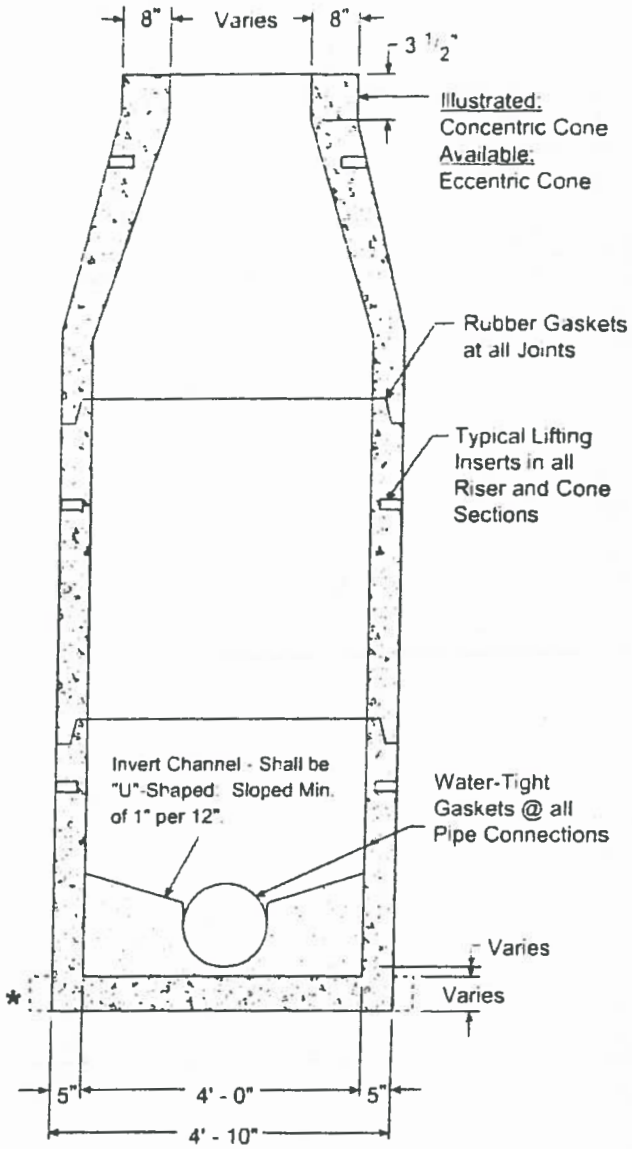

Section View
4' I.D. Manhole - Regular Base
with Reducing Cone

Materials & Features

HOLES AS SPECIFIED: Max diameter = 32"
CONCRETE: 5,000 PSI, 28 day strength.
REINFORCING: Meets or exceeds ASTM C478 requirements.
Average weight of 24" depth base w/8" invert = 4,500 lbs.
Estimated weight of riser and cone sections = 870 lbs / vt. ft.

* - Extended base is available to meet local requirements.

In the event a boot is loose contact your Hanson representative to resolve.

"Manufactured to your specifications."

-No Scale-
All dimensions subject to allowable specification tolerances

TITLE	PLANT	STATE	SECTION/PAGE	DATE	
4' I.D. Manhole **Regular Base w/ Reducing Cone**	All Plants	TX	5.5	08-15-06	Hanson

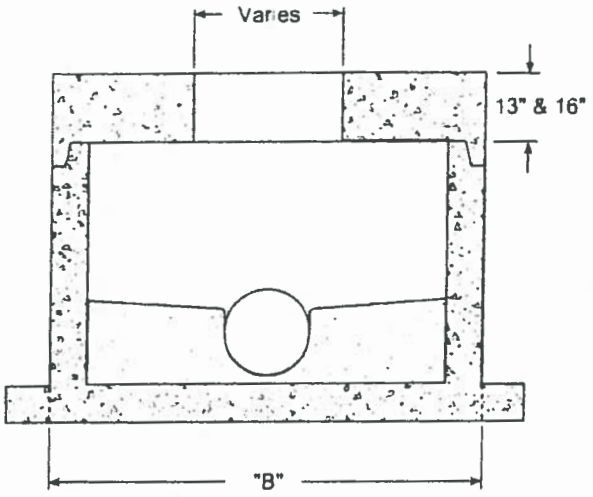

Flattop Illustration
for Shallow Manhole

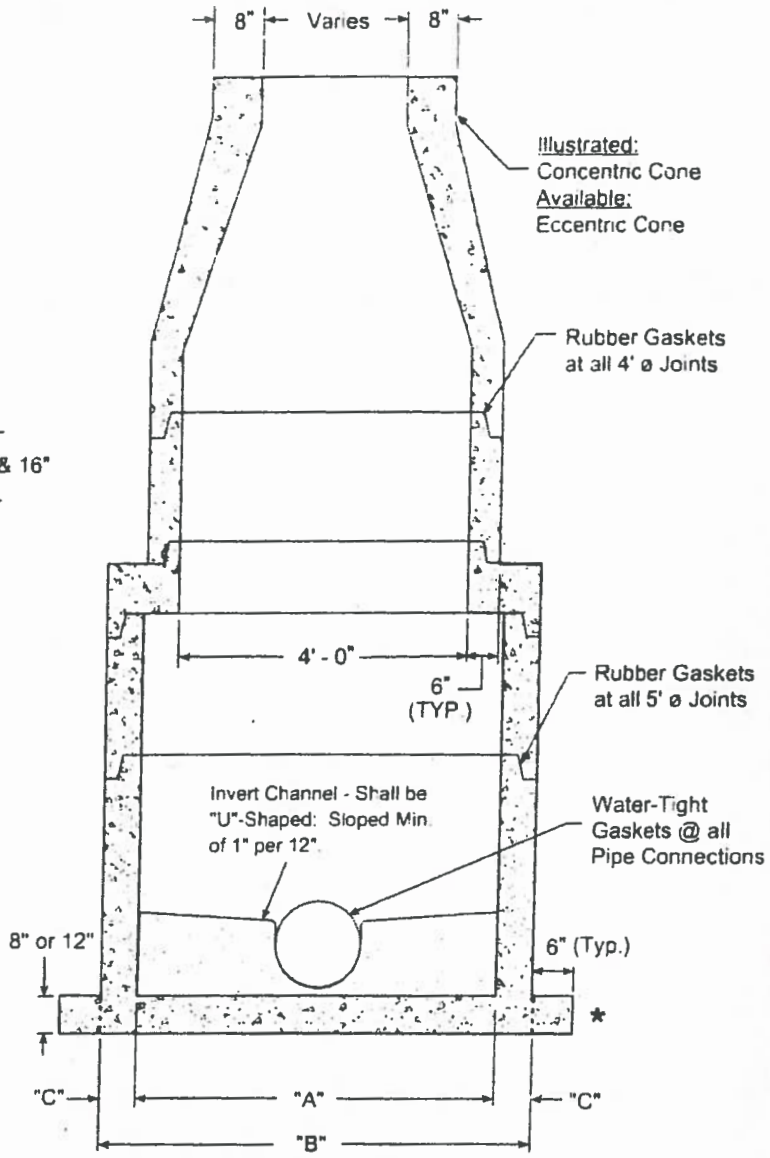

Section View
5'/4' & 6'/4' I.D. Manhole
Extended Base with Reducing Cone

Materials & Features

HOLES AS SPECIFIED: for 5' I.D. max diameter = 40"
for 6' I.D. max diameter = 54"
CONCRETE: 5,000 PSI, 28 day strength.
REINFORCING: Meets or exceeds ASTM C478 requirements.
Average weight of 24" depth base w/8" invert:
for 5' I.D. = 7,500 lbs.
for 6' I.D. = 10,600 lbs.
Estimated weight of riser and sections:
for 5' I.D. = 1,325 lbs. / vt. ft.
for 6' I.D. = 1,800 lbs. / vt. ft.
For pipe sizes 15" and larger, invert shall be equal to the larger pipe diameter.
* - Extended base shown. Regular base also available."
In the event a boot is loose contact your Hanson representative to resolve.

"Manufactured to your specifications."

Pipe Size	I.D. "A"	O.D. "B"	Wall Thk. "C"
5'	5' - 0"	6' - 0"	6"
6'	6' - 0"	7' - 2"	7"

-No Scale-
All dimensions subject to allowable specification tolerances.

TITLE	PLANT	STATE	SECTION/PAGE	DATE
5'/4' & 6'/4'I.D. Manhole **Extended Base w/Reducing Cone**	All Plants	TX	5.6	08-15-06

Hanson

Precast Manholes

For Pipe Entering the Manhole at Excessive Depths Above the Flow Line Out, the Contractor May be Responsible for Grout Work Necessary to Bring Channel up to Flow Line on Inlet Pipe.

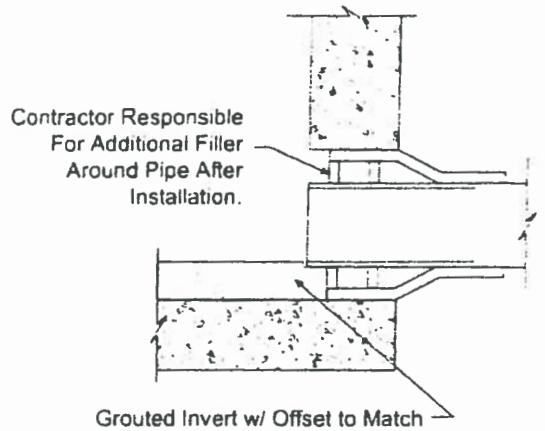

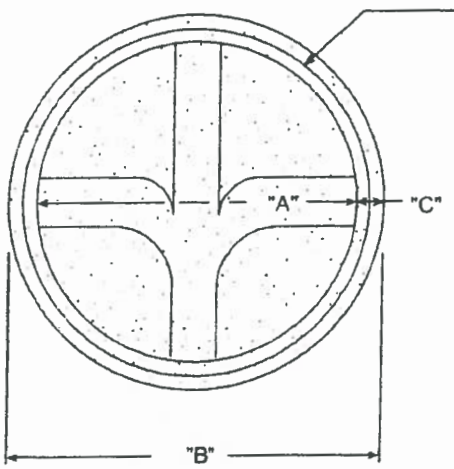

Plan View

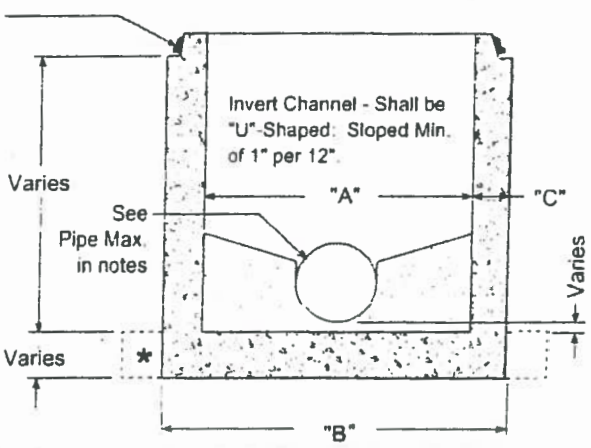

Section View

Pipe Size	I.D. "A"	O.D. "B"	Wall Thk. "C"
4'	4' - 0"	4' - 10"	5"
5'	5' - 0"	6' - 0"	6"
6'	6' - 0"	7' - 2"	7"

Materials & Features

HOLES AS SPECIFIED:
- For 4' I.D. max. diameter = 32"
- For 5' I.D. max. diameter = 40"
- For 6' I.D. max. diameter = 54"

CONCRETE: 5,000 PSI, 28 day strength
REINFORCING: Meets or exceeds ASTM C478 requirements
Average weight of 24" depth base w/8" invert = 4,500 lbs
Water-tight gaskets at all pipe connections
* - Regular base shown: Extended base also available.
In the event a boot is loose contact your Hanson representative to resolve.

-No Scale-
All dimensions subject to allowable specification tolerances

TITLE	PLANT	STATE	SECTION-PAGE	DATE	
Details: 4', 5' & 6' I.D. Precast Regular Manhole Base	All Plants	TX	5.7	08-15-06	Hanson

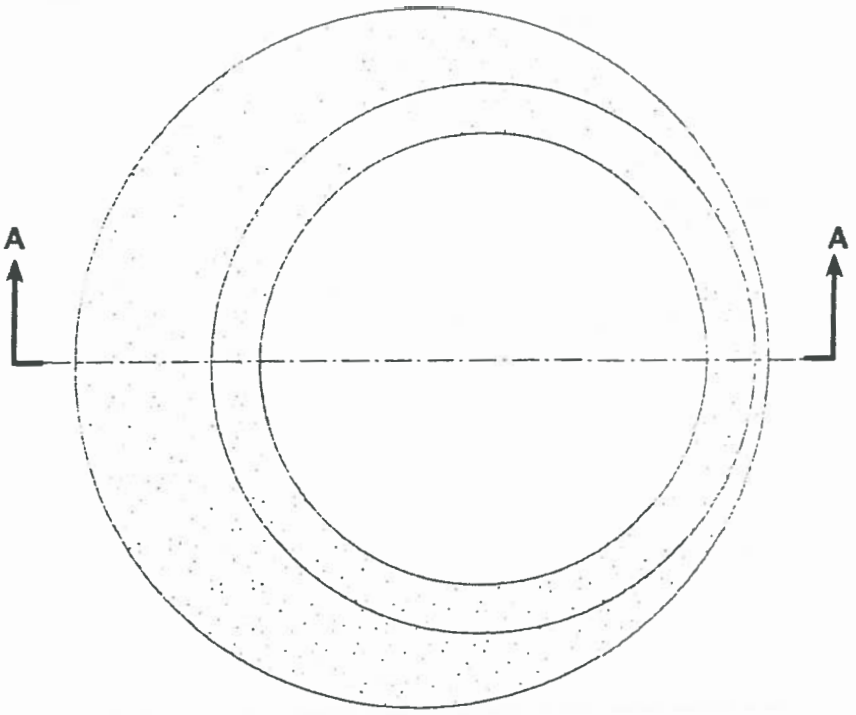

Plan View

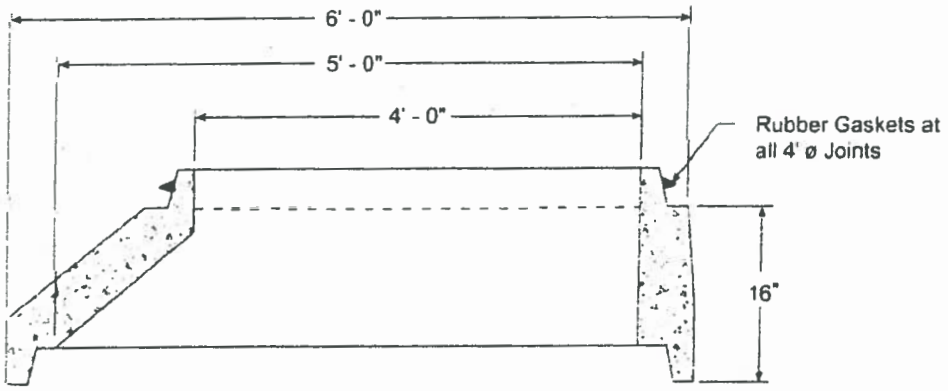

Section View

Materials & Features

CONCRETE 5,000 PSI 28 day strength
REINFORCING Meets or exceeds ASTM C478 requirements.
CONSTRUCTION OF PRECAST is in accordance with ASTM C478
Concrete is poured according to ACI-500.

-No Scale-
All dimensions subject to allowable specification tolerances

TITLE	PLANT	STATE	SECTION/PAGE	DATE	
5' x 4' Conical Adaptor	Waco	TX	5 8	08-15-06	Hanson

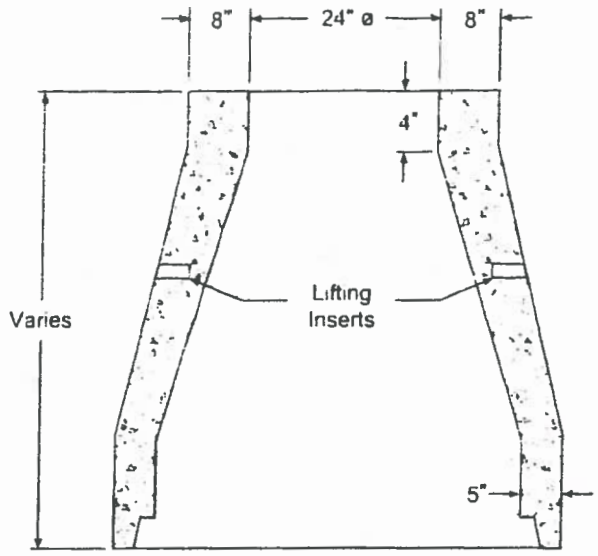

Concentric Cone
24" ø Opening

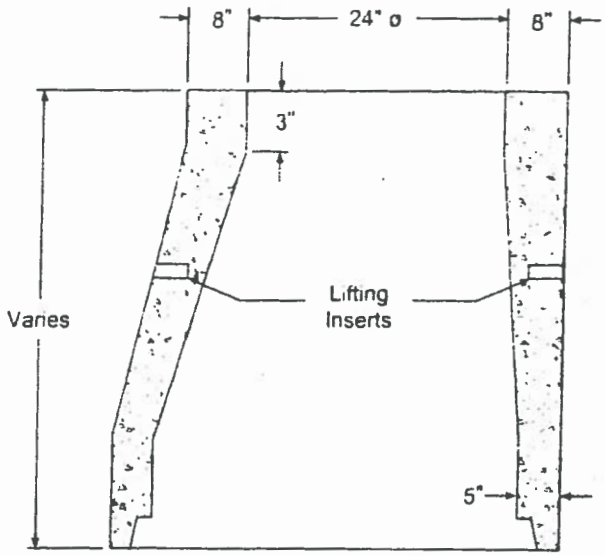

Eccentric Cone
24" ø Opening

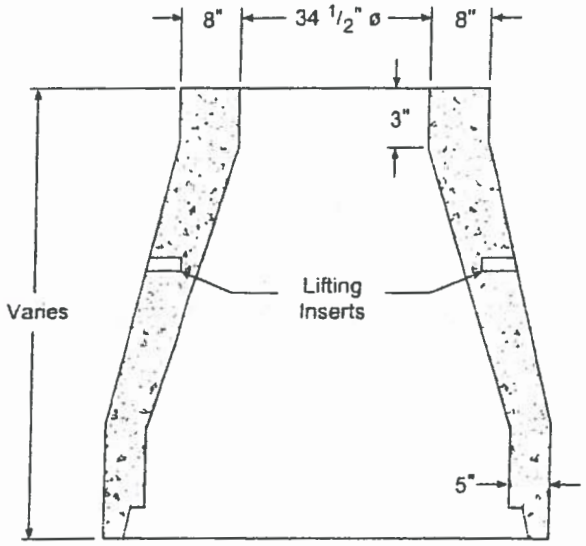

Concentric Cone
34 1/2" ø Opening

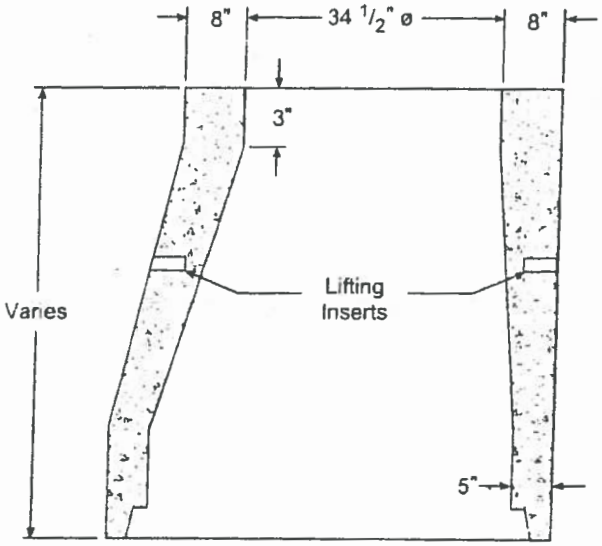

Eccentric Cone
34 1/2" ø Opening

Materials & Features

CONCRETE: 5,000 PSI, 28 day strength.
REINFORCING: Meets or exceeds ASTM C478 requirements.
30" ø also available in North Texas.

-No Scale-
All dimensions subject to allowable specification tolerances.

TITLE	PLANT	STATE	SECTION.PAGE	DATE
Hanson 48" Manhole Reducing Cone Detail	Waco Houston	TX	5.9	08-15-06

Hanson

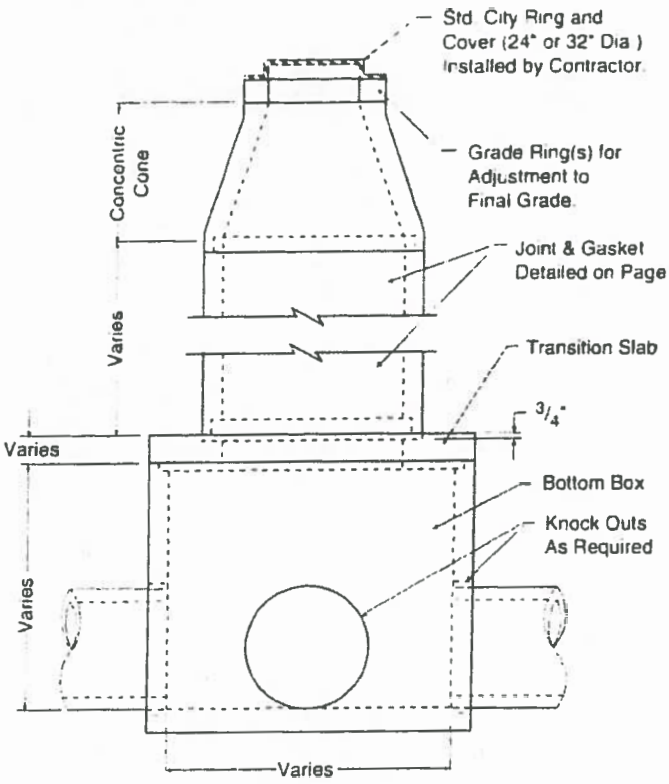

Side View

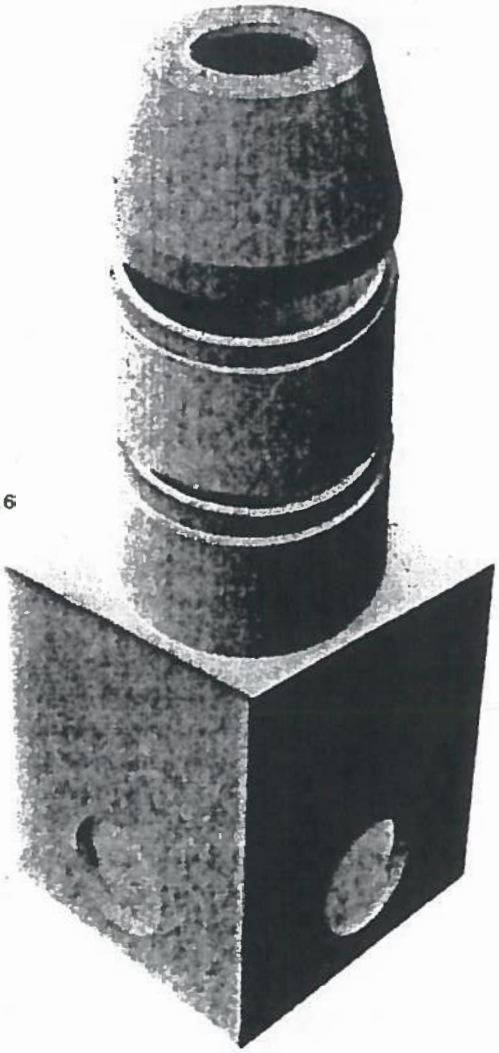

Isometric View

Materials & Features

CONCRETE. 5,000 PSI in 28 days.

REINFORCING STEEL. per ASTM A-615 / A-185

REINFORCING to meet AASHTO HS 20-44 Loading.

BASE DESIGN EQUAL TO OR EXCEEDS ASTM C-357

RISER DESIGN EQUAL TO OR EXCEEDS ASTM C-478

In the event a boot is loose contact your Hanson representative to resolve.

-No Scale-
All dimensions subject to allowable specification tolerances.

TITLE	PLANT	STATE	SECTION.PAGE	DATE	
Type "C" Manhole	Houston San Antonio	TX	5.11	08-15-06	Hanson

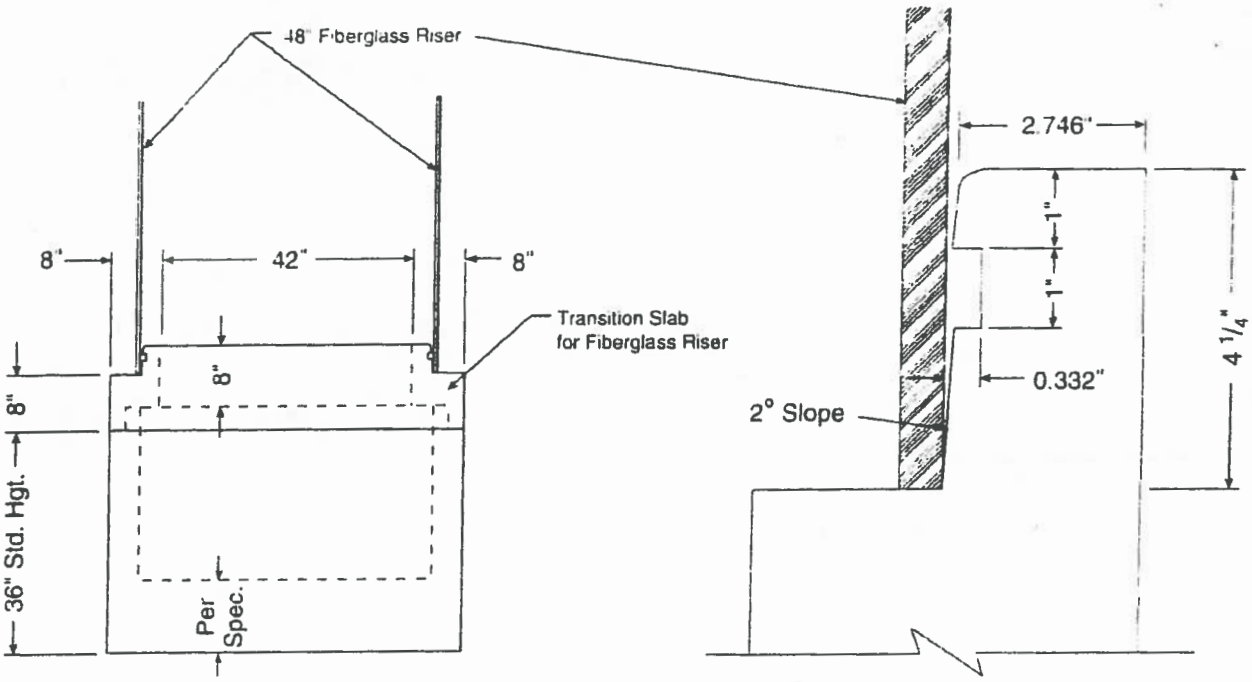

Profile **Joint Detail**

Materials & Features

CONCRETE: 5,000 PSI in 28 days.
REINFORCING STEEL: per ASTM A-615, Grade 60.
REINFORCING to meet AASHTO HS 20-44 Loading.
DESIGN EQUAL TO OR EXCEEDS ASTM C-478

-No Scale-
All dimensions subject to allowable specification tolerances.

TITLE	PLANT	STATE	SECTION/PAGE	DATE	
ASTM C-478 Special Base	Houston	TX	5.12	08-15-06	Hanson

Precast Manholes

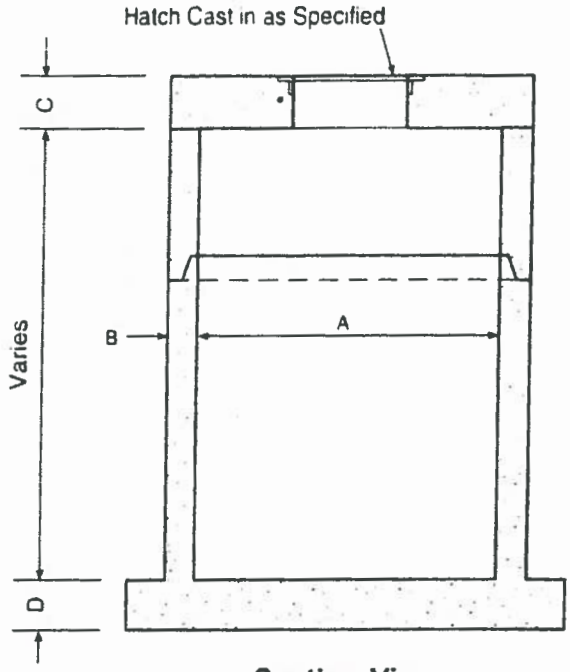

Section View
(Base configuration for 60", 72" & 84")

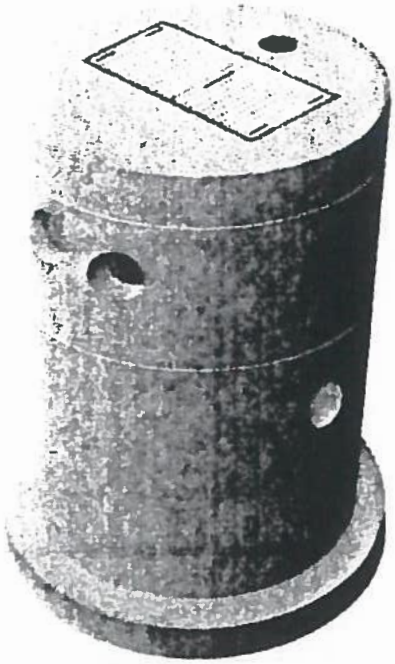

Isometric View

Product Dimensions			
A	B	C	D
60"	Contact your local Hanson representative for product dimensions.		
72"			
84"			
96"			
108"			
120"			
132"			
144"			

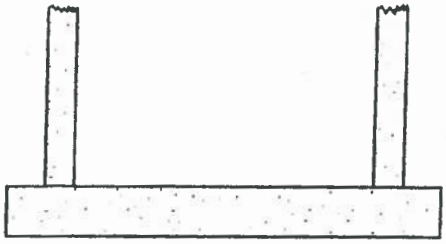

Section View
Base configuration for 96"

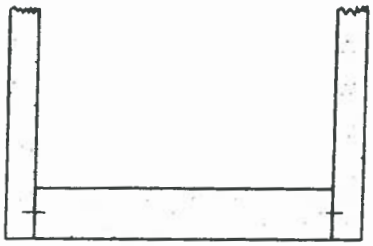

Section View
Base configuration for 108"-144"

Materials & Features

CONCRETE: 5,000 PSI in 28 days.

REINFORCING STEEL: per ASTM A-615 / A-185

REINFORCING to meet AASHTO HS 20-44 Loading.

BASE DESIGN EQUAL TO OR EXCEEDS ASTM C-357

RISER DESIGN EQUAL TO OR EXCEEDS ASTM C-478

(A). Hatches as specified by Engineer.

In the event a boot is loose contact your Hanson representative to resolve.

-No Scale-
All dimensions subject to allowable specification tolerances

TITLE	PLANT	STATE	SECTION, PAGE	DATE	
Typical Wetwells - Various Diameters	All Plants	TX	5.13	08-15-06	Hanson

① "O"-Ring Gasket

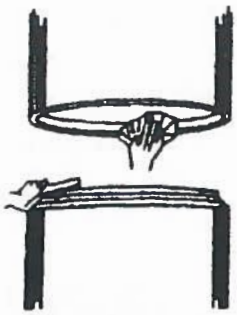

Carefully clean all dirt & foreign objects from the joining surface of the bell or groove end of pipe.

Carefully clean spigot or tongue end of pipe, including the gasket recess. Inspect the bell and spigot ends of each section to make sure they are free from cracks, chips or voids that will interfere with gasket.

Improperly prepared bell and spigot surfaces may prevent homing of the pipe or keep the gasket from sealing.

②

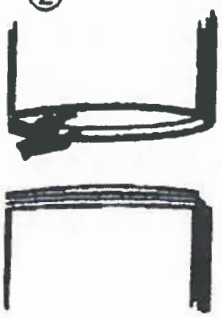

Lubricate bell joint surface liberally, covering entire inside surface using proper pipe gasket lubricant.

③



Lubricate the gasket throughly before it is placed on the spigot or tongue.

Bell and Gasket not lubricated or improperly lubricated may cause the gasket to roll and leak or possibly damage the bell.

④



****IMPORTANT****

Fit the gasket carefully, equalizing the rubber gasket stretch by running a smooth, round object (inserted between the gasket & spigot) around the entire circumference several times.

Unequal stretch could cause bunching of the gasket and may cause leaks in the joint or crack the bell.

⑤

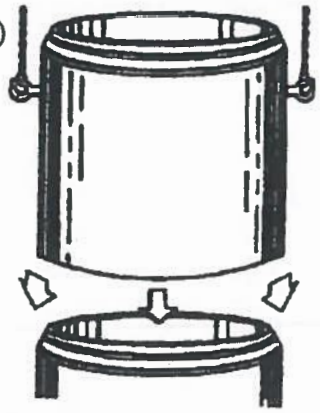

Align the bell & spigot to be joined. Before homing the joint, check that the gasket is in contact with the bell end entrance taper around the entire circumference.

Do not force sections together. If sections do not seat properly, unstack and contact your Hanson Sales Representative.

Improper alignment can dislodge gasket, causing leaks or possibly breaking the bell.

Profile Gasket

1. Manhole sections should be handed with extreme caution to avoid chipping of the bell or spigot ends. Proper lifting devices must be used on all sections.
2. Inspect gasket sealing area for any voids or rough edges that may interfere with the seal.
3. Place the 4-G Gasket in the step of the spigot. (Making sure that the pointed end of the gasket is toward the end of the pipe as shown in Fig A.)
4. ****IMPORTANT**** Equalize the stretch on the gasket by pulling the sealing lube away from the spigot at least one inch and then releasing the gasket. Repeat this every three or four inches around the circumference of the pipe. Equalization of stretch makes sure that the gasket has the same stretched cross-section and tension throughout. **Do not lube the gasket or spigot end of the pipe.**
5. Remove all dirt and other foreign matter from the inside surface of the bell. Apply lube to the inner surface of the bell including the lead-in taper surface on the outer edge of the bell. Align spigot with the bell. Gasket should touch lead-in taper around the entire circumference before pushing the pipe home.
6. Push the manhole section carefully, until the spigot is all the way home. (Fig B) Do not force sections together. If sections do not seat properly, unstack and contact your Hanson Sales Representative.
7. Every manhole will not come home exactly the same. Differences in application, consistency of lubricants, dimensions in the spigot and groove will cause variations in installation. If joining problems arise, please contact the manhole manufacturer immediately rather than forcing manhole sections together with subsequent damage to the manhole.
8. All testing should be performed prior to backfill of the manhole. Problems can not be detected after the manhole is backfilled. **Testing the manhole after backfill voids all warranties.**



Fig. A



Fig. B

Note: *Manholes in excess of 30' in depth must be vacuum tested prior to backfill. The loads* presented by soils and possible groundwater at 30' in addition to the load from the vacuum may exceed the design capacity of the pipe to manhole connector.

TITLE	PLANT	STATE	SECTION.PAGE	DATE	
O-Ring & Profile Gasket Installation on Manholes	All Plants	TX	5.14	08-15-06	Hanson

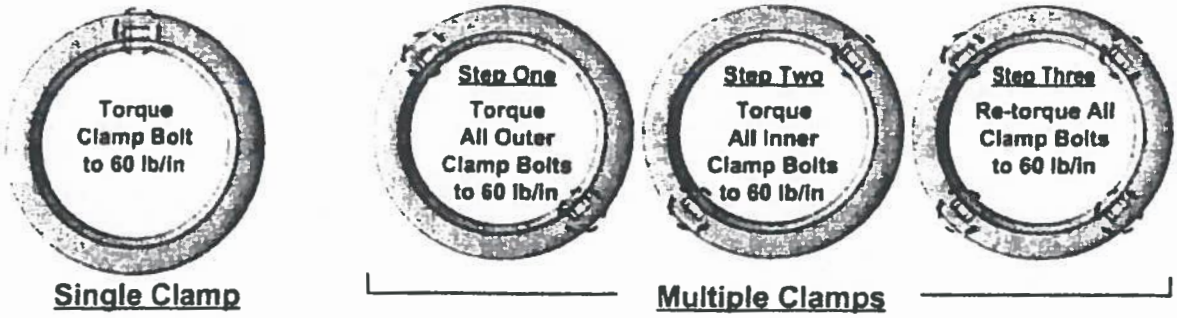

Single Clamp

Multiple Clamps

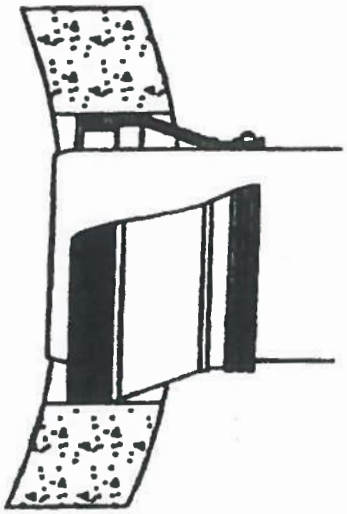

Instructions

1. Clean pipe and boot to ensure no dirt or foreign materials are present.
2. Clamping surface on pipe must be clean and smooth.
3. Center pipe in opening and insert until pipe is at least equal to the inside plane of the manhole.
4. Attach take-up clamps(s) and stagger screw(s) of clamps(s) around the groove of the gasket so that take-up pressure will be equalized. Make sure each clamp is completely in the correct groove.
5. Using a torque ratchet or torque wrench, gradually tighten all screw(s) of clamp(s) in an alternating pattern to 60 lbs/in torque.
6. After reaching 60 lbs/in torque on final screw, check all screws again to ensure equal compression of all clamps.
7. If system is to be tested, testing shall be completed prior to backfilling, following all recommendations and requirements of the test system manufacturer. Vacuum testing shall be conducted in accordance with ASTM C-1244.
8. Adjust pipe to line and grade. Use proper bedding, backfill materials and techniques so that pipe deflection and deformation is minimized.
9. Any pipe stubs installed in the manhole must be positively restrained from movement.
10. Vacuum testing after backfill voids warranty.

For more information contact yor local Hanson Representative.

SITE PLAN

Date: Oct 02, 2024, 12:04pm User ID: tstephens
File: H:\Projects\511\18\60_Phase 5\308 SCS Application\Report\SP51118-61_SCS.dwg

THIS DOCUMENT HAS BEEN PRODUCED FROM MATERIAL THAT WAS STORED AND/OR TRANSMITTED ELECTRONICALLY AND MAY HAVE BEEN UNINTENTIONALLY ALTERED. REFER ONLY TO FINAL HARDCOPY MATERIALS BEARING THE CONSULTANT'S ORIGINAL SIGNATURE AND SEAL.

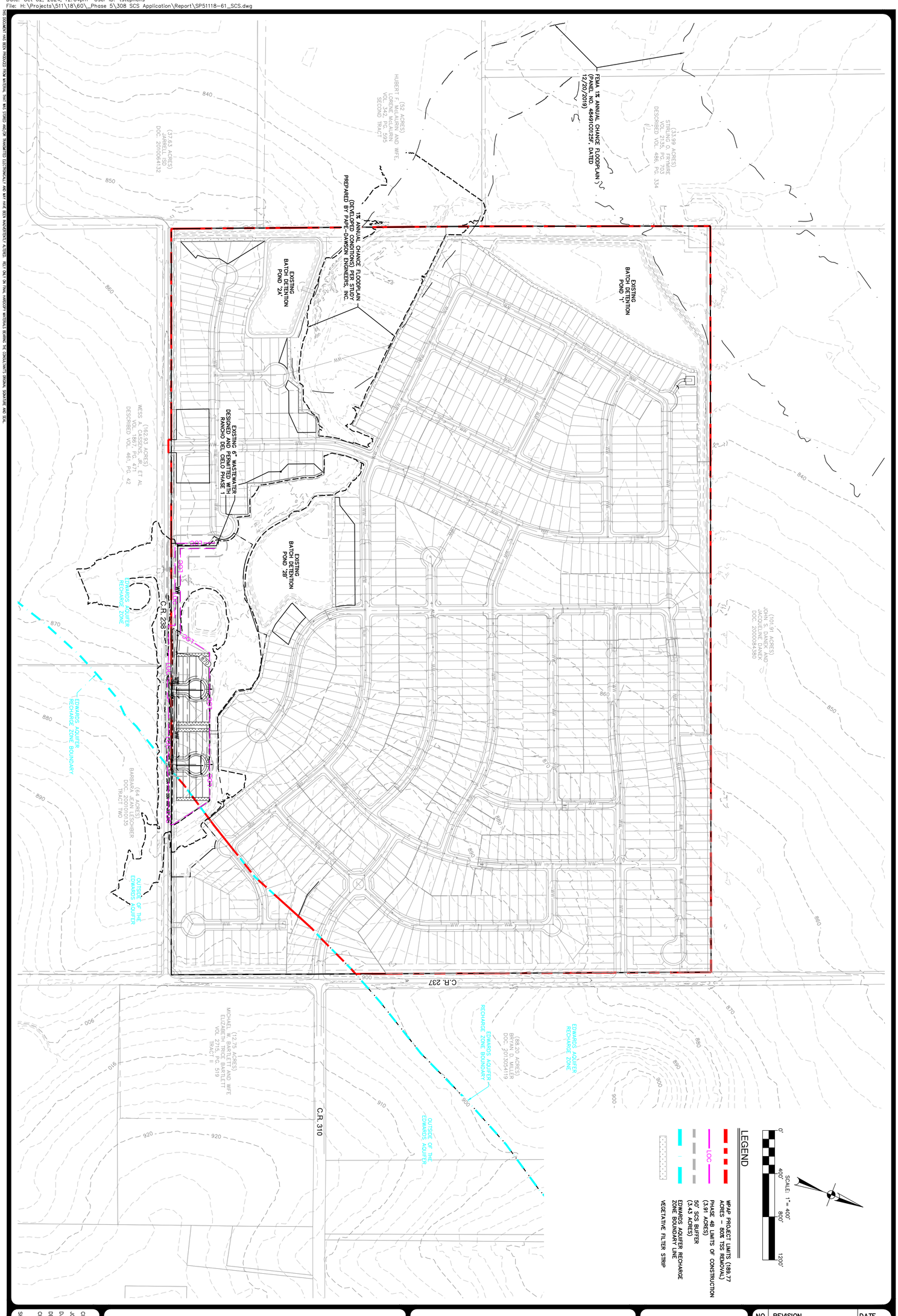

RANCHO DEL CIELO - PHASE 4B
WILLIAMSON COUNTY, TEXAS

SCS SITE PLAN EXHIBIT

PAPE-DAWSON ENGINEERS
AUSTIN I SAN ANTONIO I HOUSTON I FORT WORTH I DALLAS
10801 N MOPAC EXPY, BLDG 3, STE 200 I AUSTIN, TX 78759 I 512.454.8711
TBPE FIRM REGISTRATION #470 I TBPLS FIRM REGISTRATION #10028801

NO.	REVISION	DATE

CITY JOB No. ____
JOB NO. 51118-61
DATE SEPTEMBER 2024
DESIGNER TS
CHECKED ____ DRAWN/CE/JM
SHEET 1 OF 1

FINAL PLAN & PROFILE SHEETS

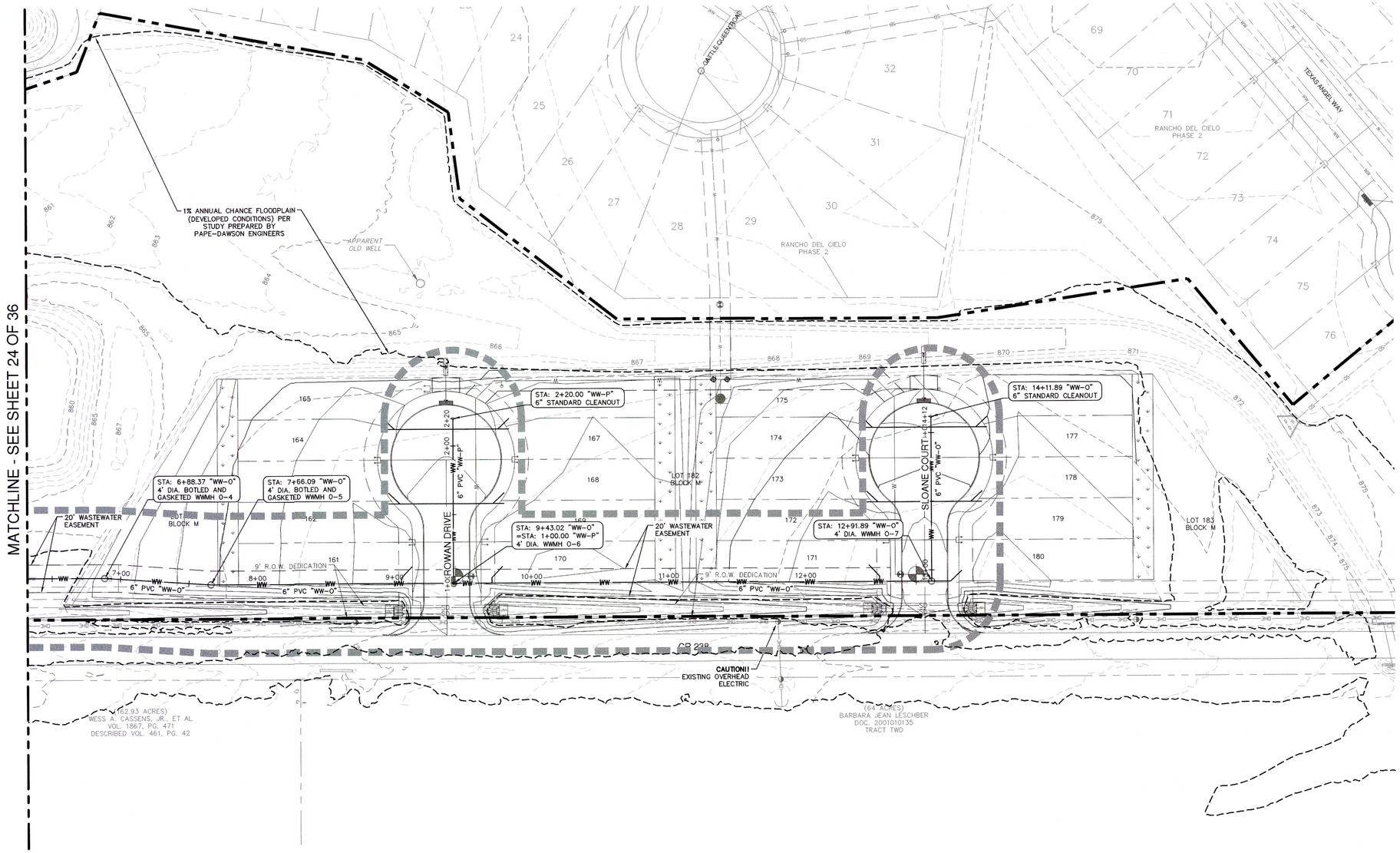

SCALE: 1"= 40'

0' 40' 80' 120'

LEGEND

- WATER LINE
- WASTEWATER LINE & MH
- STORM DRAIN LINE & MH
- CURB INLET
- SINGLE WATER SERVICE
- DOUBLE WATER SERVICE
- SINGLE WW SERVICE
- DOUBLE WW SERVICE
- GATE VALVE
- FIRE HYDRANT
- EXISTING GATE VALVE
- EXISTING FIRE HYDRANT
- EXISTING WATER LINE
- EXISTING WASTEWATER LINE
- EXISTING STORM DRAIN LINE
- EXISTING FORCE MAIN LINE
- 50' SCS BUFFER

NOTES

1. CONTRACTOR TO FIELD VERIFY LOCATIONS OF EXISTING UTILITIES AND IMPROVEMENTS AND NOTIFY ENGINEER IF DISCREPANCIES EXIST.

NO.	REVISION	DATE

STATE OF TEXAS
JENNIFER C. FRANKLIN
118838
LICENSED PROFESSIONAL ENGINEER
9-30-24

PAPE-DAWSON ENGINEERS
AUSTIN | SAN ANTONIO | HOUSTON | FORT WORTH | DALLAS
10801 N MOPAC EXPY, BLDG 3, STE 200 | AUSTIN, TX 78759 | 512.454.8711
TBPE FIRM REGISTRATION #470 | TBPLS FIRM REGISTRATION #10028801

RANCHO DEL CIELO - PHASE 4B
WILLIAMSON COUNTY, TEXAS

OVERALL WASTEWATER PLAN 1 OF 2

CITY JOB No.
JOB NO. 51118-61
DATE SEPTEMBER 2024
DESIGNER TS
CHECKED DRAWN CE/JM
SHEET 23 OF 36

Date: Sep 30, 2024, 3:57pm User ID: tstephens
File: H:\Projects\51\118\60_Phase 5\30\ Construction Documents\Civil\051118-61.dwg

THIS DOCUMENT HAS BEEN PRODUCED FROM MATERIAL THAT WAS STORED AND/OR TRANSMITTED ELECTRONICALLY AND MAY HAVE BEEN INADVERTENTLY ALTERED. RELY ONLY ON FINAL HARDCOPY MATERIALS BEARING THE CONSULTANT'S ORIGINAL SIGNATURE AND SEAL.

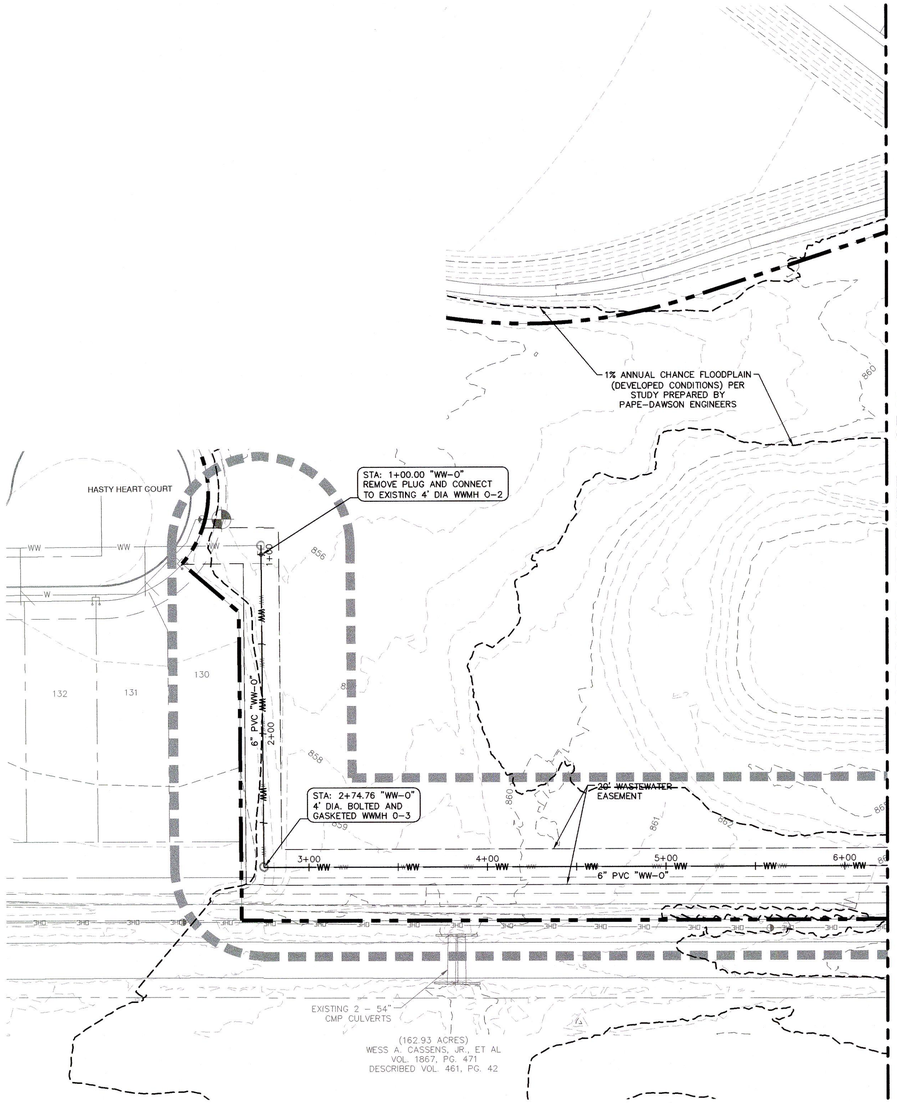

SCALE: 1"= 40'

0' 40' 80' 120'

LEGEND

- WATER LINE
- WASTEWATER LINE & MH
- STORM DRAIN LINE & MH
- CURB INLET
- SINGLE WATER SERVICE
- DOUBLE WATER SERVICE
- SINGLE WW SERVICE
- DOUBLE WW SERVICE
- GATE VALVE
- FIRE HYDRANT
- EXISTING GATE VALVE
- EXISTING FIRE HYDRANT
- EXISTING WATER LINE
- EXISTING WASTEWATER LINE
- EXISTING STORM DRAIN LINE
- EXISTING FORCE MAIN LINE
- 50' SCS BUFFER

NOTES

1. CONTRACTOR TO FIELD VERIFY LOCATIONS OF EXISTING UTILITIES AND IMPROVEMENTS AND NOTIFY ENGINEER IF DISCREPANCIES EXIST.

NO.	REVISION	DATE

STATE OF TEXAS
JENNIFER C. FRANKLIN
118838
LICENSED
PROFESSIONAL ENGINEER
9-30-24

PAPE-DAWSON ENGINEERS
AUSTIN I SAN ANTONIO I HOUSTON I FORT WORTH I DALLAS
10801 N MOPAC EXPY, BLDG 3, STE 200 I AUSTIN, TX 78759 I 512.454.8711
TBPE FIRM REGISTRATION #470 I TBPLS FIRM REGISTRATION #10028801

RANCHO DEL CIELO - PHASE 4B
WILLIAMSON COUNTY, TEXAS

OVERALL WASTEWATER PLAN 2 OF 2

CITY JOB No.
JOB NO. 51118-61
DATE SEPTEMBER 2024
DESIGNER TS
CHECKED DRAWN CE/JM
SHEET 24 OF 36

Date: Sep 30, 2024, 3:57pm User ID: tstephens
File: H:\Projects\511\18\60_Phase 5\301 Construction Documents\Civil\OS51118-61.dwg

THIS DOCUMENT HAS BEEN PRODUCED FROM MATERIAL THAT WAS STORED AND/OR TRANSMITTED ELECTRONICALLY AND MAY HAVE BEEN INADVERTENTLY ALTERED. RELY ONLY ON FINAL HARDCOPY MATERIALS BEARING THE CONSULTANT'S ORIGINAL SIGNATURE AND SEAL.

Date: Sep 30, 2024, 2:38pm User ID: jessemesa
File: H:\Projects\511\18\60_Phase 5\301 Construction Documents\Civil\SSP51118-61.dwg

THIS DOCUMENT HAS BEEN PRODUCED FROM MATERIAL THAT WAS STORED AND/OR TRANSMITTED ELECTRONICALLY AND MAY HAVE BEEN INADVERTENTLY ALTERED. RELY ONLY ON FINAL HARDCOPY MATERIALS BEARING THE CONSULTANT'S ORIGINAL SIGNATURE AND SEAL.

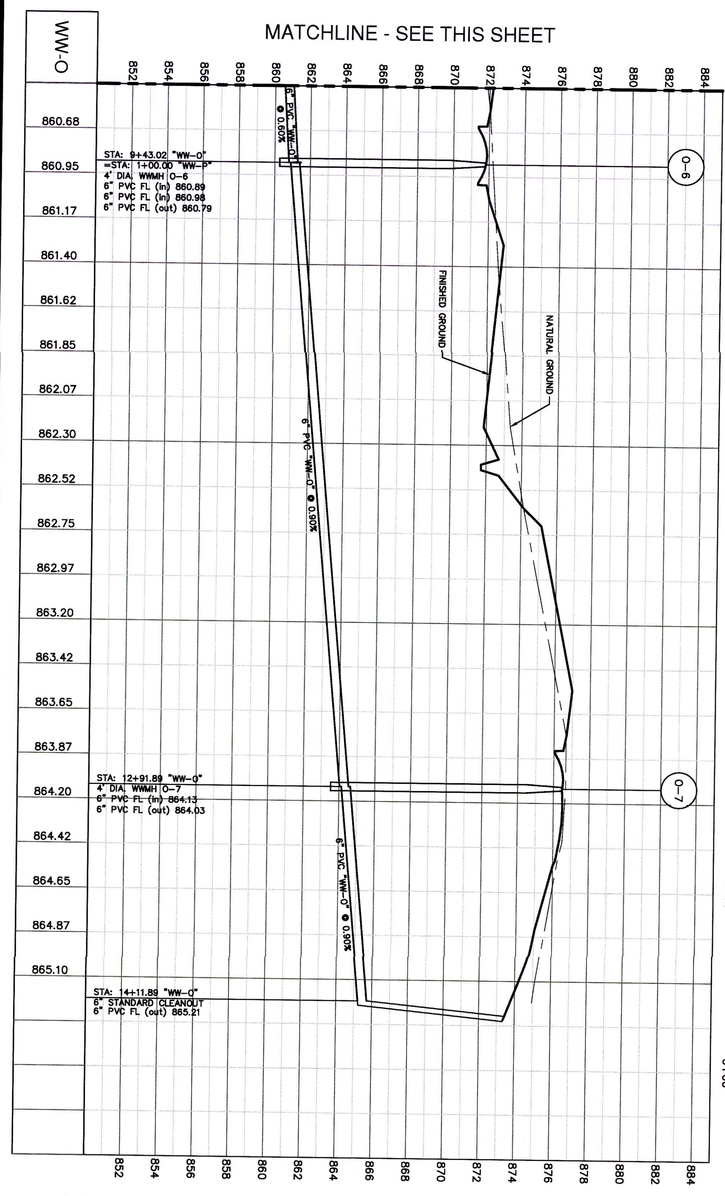

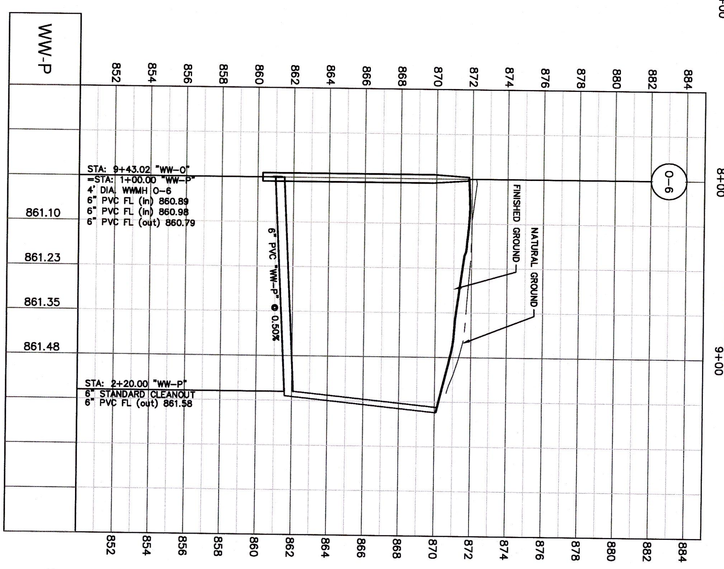

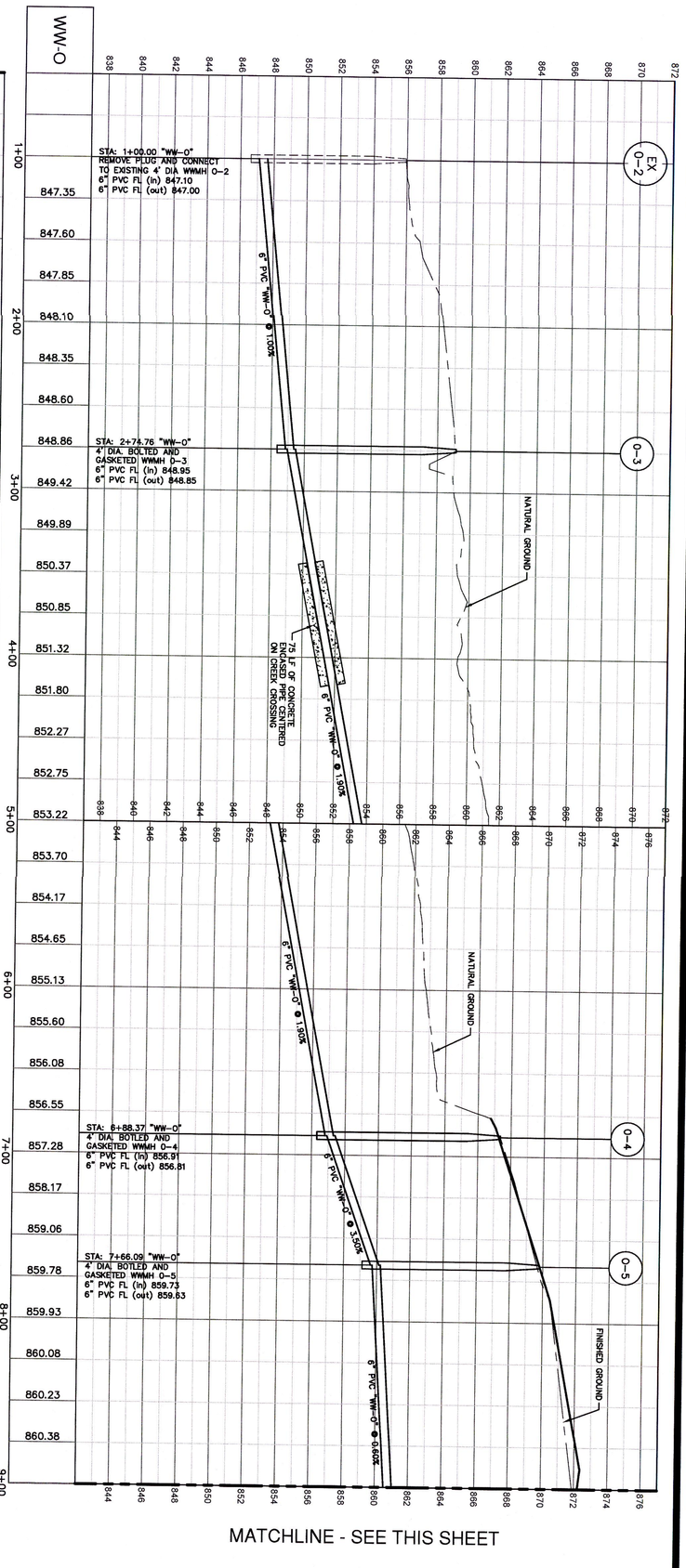

PROFILE SCALES:
1" = 40' HORIZONTAL
1" = 4' VERTICAL

PROFILE LEGEND:
NATURAL GROUND
SUBGRADE
FINISHED GRADE
PROPOSED WASTEWATER
1-JOINT OF PRESSURE PIPE
STEEL ENCASEMENT WITH SPACERS SEE CONSTRUCTION DETAILS

CITY JOB No.
JOB NO. 51118-61
DATE SEPTEMBER 2024
DESIGNER TS
CHECKED DRAWN CE/JM
SHEET 25 OF 36

RANCHO DEL CIELO - PHASE 4B
WILLIAMSON COUNTY, TEXAS

WASTEWATER PLAN & PROFILE
WW-O & WW-P

PAPE-DAWSON ENGINEERS
AUSTIN | SAN ANTONIO | HOUSTON | FORT WORTH | DALLAS
10801 N MOPAC EXPY, BLDG 3, STE 200 | AUSTIN, TX 78759 | 512.454.8711
TBPE FIRM REGISTRATION #470 | TBPLS FIRM REGISTRATION #10028801

STATE OF TEXAS
JENNIFER C. FRANKLIN
118836
LICENSED
PROFESSIONAL ENGINEER
9-30-24

NO.	REVISION	DATE

SONTERRA MUD CONSTRUCTION AND DEVELOPMENT STANDARDS AND PROCEDURES

SONTERRA
MUNICIPAL UTILITY DISTRICT

CONSTRUCTION AND DEVELOPMENT
STANDARDS AND PROCEDURES

Adopted by District Board of Directors: June 16, 2014
Revision No. 1 Adopted by District Board of Directors: November 27, 2017
Revision No. 2 Adopted by District Board of Directors: October 17, 2022
Revision No. 3 Adopted by District Board of Directors: July 17, 2023

SONTERRA MUNICIPAL UTILITY DISTRICT
CONSTRUCTION AND DEVELOPMENT STANDARDS AND PROCEDURES

TABLE OF CONTENTS

Page

1. GENERAL PROVISIONS 3

   A) Purpose and District Contact Information 3
   B) Project Review Requirements 3
   C) Construction Inspections and District Acceptance 5

2. DESIGN GUIDELINES 9

3. CONSTRUCTION STANDARDS 11

   A) Title Page 11
   B) District General Notes 11
   C) Non-District Note Requirements 13
   D) Material Specifications 13
   E) Inspections and Testing 15

4. STANDARD DETAILS 18

1. GENERAL PROVISIONS

A) Purpose and District Contact Information

The Sonterra Municipal Utility District (District) is responsible for the public water, wastewater, and drainage utilities within the District's boundary and service area. These standards and procedures provide for uniform and standard criteria for public utility development and construction within the District service areas, and may be updated from time to time. It is the developer's responsibility to obtain and comply with the latest District standards and procedures as well as additional requirements from other entities noted below.

Other entities that are responsible for public health and safety which may require additional development review and/or permit requirements in the District's service area are as follows:

Williamson County (local public roadways and drainage)
Williamson County Emergency Services District No. 5 (fire control)
Texas Department of Transportation (State roadways)
Texas Commission on Environmental Quality (construction storm water quality, water and wastewater system plan review)

The District General Manager and Board of Directors may be contacted at:

Sonterra Municipal Utility District
113 Limestone Terrace
Jarrell, Texas 76537
Office: (512) 746-2888
Fax: (512) 746-2884
Website: www.sonterramud.org

B) Project Review Requirements

All new development requests will be required to comply with the following procedures prior to beginning construction of the project:

1. District Rate Order: The developer shall reference the District's latest adopted rate order for all plan review, inspection, and service connection fees as well as on-site facility requirements which may be associated with the project (i.e., commercial or out of district service requirements).
2. Plan and Specification Approval: The developer shall submit 95% plans and specifications for the proposed development to the District for review and comment by the District's Engineer. Upon satisfaction of the District's review comments, final plans and specifications sealed by a Registered Professional Engineer licensed to practice in the State of Texas (design Engineer) shall be submitted for final approval and signature by the District Engineer. The plans and specifications shall include, at a minimum, the following items:

- Compliance with the District's construction standards and specifications, to include a District approval signature block on the cover sheet.
- Certification statement from the design engineer regarding the District's utility design requirements referenced in the Design Guidelines section of these standards.
- Compliance with TCEQ Rules 30 TAC Chapter 217 and 290 regarding design criteria for public wastewater systems and drinking water systems, respectively.
- A final plat showing the legal description and the dimensions of the lots and/or tracts that result from the subdivision of the property. The plat must be signed and sealed by a Surveyor licensed to practice in the State of Texas and shall comply with Williamson County subdivision requirements. The Federal Emergency Management Agency (FEMA) 100-year floodplain limits must be shown on the plat as well all applicable utility or drainage easements.
- Existing conditions including District boundary, adjacent property boundaries, and relevant District owned facilities based on field survey information. The approximate location of all other existing above ground and below ground utilities as well as topographic surface contours must also be shown on the plans.
- Clear identification and location of survey control points, bench marks, horizontal coordinate system (North American Datum 1983, State Plane, Texas Central Zone, Feet), and vertical datum (North American Vertical Datum 1988).
- Water, wastewater, and drainage utility plan views at a scale sufficient to show the service connections, line sizes and valve locations, easements and rights of way, and lot layout of the proposed development.
- Profile sheets for all pressure pipelines greater than 8-inches in diameter, all gravity flow wastewater mains and drainage culverts, to include identification of percent grade for all proposed pipe runs. The profile view should include the existing and proposed finished grade as well as all surface barriers, roadways, drainage features, and utility crossings.
- Site plan and profile, electrical plan and/or specifications, and mechanical plans and/or specifications for all proposed lift stations and pump stations.
- Construction details both required by the District and unique to the project as necessary to clearly show what will be constructed. All proposed material specifications should be shown and clearly identified.

Additionally, all commercial development or proposed development located outside of the District Boundary shall include:

- The current District boundary as it relates to the proposed development, and any known or proposed easements and/or rights of way that may be required to provide service from existing District facilities.
- The ultimate projected water supply demand and wastewater load (maximum day) of the subdivision or development.

- A proposed calendar of events, including design, plat approval, construction phasing and initial occupancy, and the approximate date upon which service from the District will first be required.

New development projects located outside of the District boundary, or in some instances, larger commercial projects may require additional review regarding the availability of water and wastewater service capacity from the District. Should additional information be determined necessary to review the proposed development, the developer shall submit additional information on a case by case basis.

It is the responsibility of the design Engineer to design, specify, and adequately size all internal and connecting water, wastewater, and drainage facilities. The Engineer must account for any special conditions that may be necessary and appropriate such as topography, hydraulic conditions, air valve, isolation valve, and flushing valve locations, local soil conditions, and groundwater or flooding risk.

3. Easement Acquisition: All water, wastewater, and drainage facilities accepted by the District for operation and maintenance must be located within a public right of way, public utility easement with District access, or in a private utility easement dedicated to the District. All easements shall be centered on the utility, meet the following minimum width requirements, and approved by the District prior to final recording.

i)	6-inch or less pipelines with 3 feet cover or less:	10’ Easement
ii)	Greater than 6-inch pipelines with 3 to 10 feet cover:	15’ Easement
iii)	Extra depth utilities, drainage facilities, or special equipment required:	As Required

C) Construction Inspections and District Acceptance

The District shall inspect the installation of all water, wastewater, and drainage facilities which are connected to the District systems. District staff, representatives, and/or inspectors shall make periodic checks during all phases of construction to see that the contractor or developer is complying with the construction standards and following the engineering plans approved by the District’s Engineer. Significant deviations or revisions to the approved engineering plans shall be made in writing by the design Engineer and submitted to the District Engineer for approval prior to the actual field change.

The District’s construction inspections do not relieve the contractor, developer, and design engineer of the responsibility to construct the facilities in accordance with the District approved plans and specifications, the rules and regulations of the TCEQ and the construction standards of the District.

Upon completion of construction and prior to District acceptance of the facilities for operation and maintenance, the District shall be provided with:

1. Final Record drawings approved and certified by the design Engineer showing the water, wastewater, and drainage facilities as they were constructed within the development.

2. Operation and Maintenance manuals for all lift stations, valves, pumps, or other special equipment installed as part of the development as well as copies of all applicable shop drawing submittals from the contractor.
3. Materials and pipeline testing reports required during construction of the project.
4. Prior to final walk-through, Contractor shall provide the District Engineer with an electronic video of all wastewater lines installed within the project. Internal line inspections shall utilize a color television camera to ensure that the lines are free of structural damage such as offsets, open joints, or cracked or crushed lines, that would allow exfiltration or inflitration to occur. The inspection shall show that the lines are clear of sediment and debris. The report shall identify each line and define the location of all manholes and services. An electronic copy of the inspection shall be provided to the District along with a written report identifying any deficiencies and their location in the system.
5. Certificate of completion from the Engineer who designed the facilities certifying that the construction of the facilities has been completed in accordance with the plans and specifications approved by all jurisdictional entities.
6. Contractor's affidavit of bills paid.
7. Maintenance Bond between the District and the construction contractor's bonding company to make required repairs within the first 1-year following District acceptance of the project. The Maintenance Bond shall be for 10% of the total construction contract costs for installation of the water, wastewater, and drainage facilities within the development, and provided to the District on or before the date of final acceptance by the Board of Directors.
8. Approval of final walk-through and punch-list by the District General Manager.
9. All required easements filed and recorded in the District's name.
10. A copy of the recorded plat and address plat from Williamson County.
11. Electronic copy of the design Engineer's CAD drawings to include the property boundaries, easements, and utility locations shown on the approved drawings.

All development projects to be financed by District bond applications will require additional documentation as the construction progresses and prior to District acceptance. The following documentation requirements will be coordinated with the developer by the District Engineer on an as-needed basis (reference TCEQ Construction Contract Checklist, Exhibit 1 below):

12. Plan review submittal and approval letters from TCEQ for water and wastewater.
13. Bid advertisement affidavit and add tear sheet.
14. Bid tabulation and design Engineer's recommendation of award.
15. Executed construction contract with bid proposal, to included performance and payment bonds.

16. Design Engineer's notice to proceed.
17. As construction progresses, submit 3 original copies of all pay estimates and change orders with signatures of the contractor, developer, and design Engineer for District approval.

Exhibit 1: TCEQ Construction Contract Checklist

District: _____

For: _____

Bond Issue Amount: _____

Engineering Firm: _____

Construction Contract:

Job No: _____ **Contract No:** _____

Date of Execution: _____ **Contract Amt:** _____

Contractor: _____

Prefinanced By: _____

1. CONSTRUCTION PLANS

_____ Plans (_____ Sheets) w/Engineer's. Seal ____

_____ Specifications (Add. # ____)w/Engr's. Seal ____

TCEQ Approvals (Dates)

_____ Water

_____ Wastewater (If no City of Austin Review)

_____ Wastewater (For Treatment Plant)

_____ County Engr. Approval (Drainage)

_____ Flood Control District Approval (Drainage)

_____ City Approval (If in City or ETJ)

_____ Recorded/Approved Plat

_____ Other: _____

2. CONTRACT DOCUMENTS

_____ Bid Advertisement Affidavits & Tear Sheet

_____ Bid Tabulation (____bidders)

_____ Engineer's Recommendation

_____ Executed Contract w/ Proposal

_____ Performance Bond

_____ Payment Bond

_____ Notice to Proceed

3. CONSTRUCTION PAY ESTIMATES

Date	No.	Amt.to Date	Comments
	1		
	2		
	3		
	4		
	5		
	6		
	7		
	8		
	9		
	10		
	11		
	12		
	13		
	14		
	15		

Change Orders

Date	No.	Amount	TCEQ Approvals
	1		
	2		
	3		
	4		
	5		

4. CONTRACT COMPLETION DOCUMENTS

_____ W & S Test Results

_____ Notice of Final Inspection

_____ TCEQ Inspection (Dist. No.___)

_____ Engineer's Certif of Completion

_____ Engr's Certif of Completion **(Paving)**

_____ Contractor's Affidavit of Bills Paid

_____ Letter of Acceptance

COMMENTS & NOTES

_____

_____

_____

_____

_____

_____

_____

2. DESIGN GUIDELINES

The District's water and wastewater facilities shall be designed, without exception, per the minimum guidelines of TCEQ Chapters 217 and 290.

Storm water management controls, structures, and appurtenances shall be designed and implemented per the latest Williamson County subdivision regulations.

Specific attention is directed to the following requirements for new facilities, which shall be certified in writing by the design Engineer prior to District approval of the construction plans:

1. For purposes of design and sizing of facilities, the Living Unit Equivalent (LUE) connections served by the proposed water and wastewater system shall be calculated using the following criteria. The LUE conversions provided are estimates only; an engineering study showing different usage patterns will be acceptable. All applicable service connection fees paid by and to the District will be based on the equivalent meter size as defined in the District's Rate Order.

Land Use Description		LUE Multiplier
i)	Single-Family Residence	1.0 per connection
ii)	Modular or Mobile Home	1.0 per connection
iii)	Duplex (2 units)	1.0 per unit
iv)	Multi-Family (>2 units)	0.7 per unit
v)	Hotel or Motel	0.5 per room
vi)	Office Space	1.0 per 3,000 square feet
vii)	Office Warehouse	1.0 per 4,000 square feet
viii)	Retail, Shopping Center	1.0 per 1,660 square feet
ix)	Restaurant, Cafeteria	1.0 per 200 square feet
x)	Hospital	1.0 per bed
xi)	Rest Home	0.5 per bed
xii)	Church (worship services only)	1.0 per 70 seats
xiii)	School (includes gym & cafeteria)	1.0 per 13 students

2. The static water pressure range within the proposed development shall be no less than 50 PSI and no more than 110 PSI using a water surface hydraulic grade line of 1,020 ft-msl (50 PSI at the District's Water Plant No. 2). If the maximum static pressure exceeds 80 PSI, a pressure reducing valve will be required on the property owner's side of the water meter and should be shown on the plan view.

3. The water system shall meet a peak hour demand equal to 1.5 gpm per LUE under ultimate build-out conditions while maintaining a 35 PSI minimum operating pressure within the District's water system. The hydraulic friction loss calculations shall be performed using a maximum Hazen Williams coefficient (C Factor) of 130. Ultimate build-out conditions shall consider future service extensions which may be supplied through the proposed development pipelines. The District Engineer shall coordinate the system operating parameters required for the peak hour delivery calculations (e.g.,

system flow and pressure available to the proposed development and requirements for future development extensions).

4. A minimum fire flow of 1,000 gpm must be designed for all proposed fire hydrants while maintaining a 20 PSI minimum operating pressure within the District's water system under ultimate build-out conditions. Fire hydrants shall be located at minimum spacing intervals of 500 feet in residential areas and 300 feet in commercial areas. The District Engineer shall coordinate the system operating parameters required for the fire flow delivery calculations.

5. Water mains and wastewater force mains shall include air valves at high points and per the guidelines of AWWA Manual M51 for air-release, air/vacuum, and combination air valves, with consideration that air valves are generally not necessary on internal distribution water mains less than or equal to 12" diameter where service connections are located at or near the high points.

   Additionally, flush valves shall be installed at all dead-end mains, and gate valves at dead-end mains where future extensions are planned. A minimum of 60-feet (3 pipeline joints) shall be provided between the dead-end main isolation valve and flush valve to ensure adequate thrust restraint and minimize service interruptions during future tie-ins. Looped mains and gate valves shall be installed in residential areas at locations appropriate to minimize customer outages during future District repairs.

6. Peak Wet-Weather Wastewater Flow (PWWF) shall not exceed <u>85% of the capacity</u> of the pipe flowing full within all proposed wastewater mains under ultimate build-out conditions. PWWF shall be calculated using the following formula:

   PWWF = Peak Dry Weather Flow (PDWF) + Inflow and Infiltration (I&I); where,

   $PDWF = [(18 + (0.0206 \times F)^{0.5}) / (4 + (0.0206 \times F)^{0.5})] \times F$

   F = Average Dry-Weather Flow in gpm = 70 gallons per person per day x3 people per LUE x the number of LUE's served / 1,440

   I&I = 750 gallons per day per acre served

7. Channels, Water Quality and Detention Ponds (to be maintained by the District)

   A. Channels and ponds shall be designed in conformance with TCEQ and Williamson County regulations.

   B. Ponds shall have a minimum 6' top width and side slopes no steeper than 3:1.

   C. Ponds shall meet all TCEQ Dam Safety requirements

   D. Minimum grades for bottom slopes shall be 1% for grass and 0.5% for concrete.

   E. Side slopes shall be revegetated using Curlex matting or equivalent.

   F. All outlet pipes shall be mitered to conform to slope and shall have energy dissipaters on downstream outlet.

3. CONSTRUCTION STANDARDS

The following construction standards shall be incorporated, as appropriate, within the developer's construction plans and specifications prior to District approval.

These standards are provided by the District as general guidance only. It is the responsibility of the design Engineer to design, size, and specify appropriate materials for the construction of the proposed water, wastewater, and drainage facilities based on site specific conditions and current Local, State, and Federal regulations.

A) Title Page (add the following to the plans as stated)

Accepted for Construction:

_____

Sonterra Municipal Utility District Date
District Engineer

Review of the plans by the District is limited to water, wastewater, and drainage facilities, and does not indicate a review of the adequacy of the design of facilities. In approving these plans, the District must rely on the adequacy of the work of the design engineer.

B) District General Notes (add the following to a notes sheet of the plans as stated)

1. The District Engineer shall be contacted at least 2 working days (48-hours) prior to:
   i. Conducting a pre-construction conference;
   ii. Beginning of each phase of construction;
   iii. Testing of water and wastewater lines or critical equipment; and,
   iv. Final walk-through of facilities.
2. The District Operator shall be contacted at least 3 working days (72-hours) prior to:
   i. All connections or modifications to the existing water or wastewater system; and,
   ii. Testing of water and wastewater lines or critical equipment.
3. The contractor shall verify the exact location and depths of underground utilities at least 48-hours prior to construction whether shown on the plans or not, and to protect the same during construction. The following local utility contact information is provided for reference only and may be updated from time to time:
   i. Sonterra Municipal Utility District: (512) 246-1400
   ii. Jarrell-Schwertner Water Supply Corporation: (512) 746-2114
   iii. Texas State-Wide On Call Locator: Dial '811'
4. The contractor shall allow entry by the District's representative on the land or premises for the purpose of inspection of conditions on the premises during all phases of construction.

5. The contractor shall directly notify the District's inspection representative at least 48-hours prior to any business day no work will be performed. Lack of notice may result in the contractor being charged the inspector's applicable fees for days not worked.
6. No construction of any water, wastewater, or drainage facilities shall be allowed during non-business hours to include weekends and holidays, unless prior approval is received by the District in writing.
7. Contractor shall designate an English speaking representative at the project site for all District inspections and correspondence.
8. No valves will be opened which connect new water mains to the existing District system without prior District approval and a District representative present. As an alternative, all initial filling, flushing, and hydrostatic testing of new water mains may be from the contractor's construction meter and backflow prevention valve via one or more temporary jumper(s) installed to bypass the existing District valve(s). Following a passing hydrostatic test and initial flushing of the main to achieve chlorine residuals acceptable for public drinking water systems, final scour flushing will be allowed through the existing District valve(s) with a District representative present.

   In all instances, passing bacteriological test(s) must be provided to the District before leaving the existing District valve(s) open without a District representative present.
9. Contractor shall submit a flushing plan to the District Engineer and Operator prior to scheduling flushing of lines. Contractor shall use Chlor-Serv, Inc. or similar District approved company for flushing lines within the District.

   Contractor shall maintain a log of all flushing locations, dates, times, and durations that may require potable water not otherwise being measured by the contractor's construction meter. The contractor's flushing logs shall be submitted and approved by the District Operator prior to final acceptance and payment on the project.

   Contractor shall properly dispose of all highly chlorinated flush water (>10 mg/liter chlorine residual) with a District representative present. Highly chlorinated water may not be disposed of directly into the District's storm drain system, drainage channels, creeks, or wastewater collection system at a rate which may cause damage to the wastewater treatment process or the environment.
10. With the exception of lot pads where additional construction is planned, all areas disturbed by construction shall be seeded and re-vegetated after construction is complete. Additionally, all 4:1 or steeper earthen slopes and channel flow lines shall include 4-inches topsoil and temporary erosion control matting. Alternative stabilization methods will be considered on a case by case basis. Contractor shall be responsible for establishing vegetation by periodic watering or other acceptable means.
11. Contractor is responsible for compliance with Texas Pollutant Discharge Elimination System (TPDES) Construction General Permit (CGP) No. TXR150000, as applicable.
12. Contractor is responsible for restoring any damages to existing structures, utilities, fences, pavement, curbs, landscaping, or driveways to its original, or better, condition.

13. All garbage and spoil material from this work shall be removed from the site by the contractor.
14. The interior of all pipe, fittings, and other accessories shall be kept free from dirt and foreign matter at all times (including during transport and delivery) and stored in a manner that will protect them from damage. Contractor to ensure that pipeline ends are covered closest to truck exhaust during transport. Stockpiled materials shall be stacked so as to minimize entrance of foreign matter.
15. Contractor shall comply with the requirements of TCEQ Rule 30 TAC 290.44 relating to separation of water and wastewater lines.
16. All manhole frames, covers, valves, and cleanouts shall be raised to finished grade prior to final paving construction.
17. All wet utility installation to be complete in place prior to the installation of dry utilities.
18. All water service, wastewater service, and valve locations shall be appropriately marked as follows:

Water service	"W" on face of curb
Wastewater service	"S" on face of curb
Valve	"V" on face of curb

C) Non-District Note Requirements (including, but not limited to the following sources)

1. Williamson County General Construction Notes (as directed by County)
2. TCEQ Water/Wastewater Separation Requirements (from 30 TAC Chapter 290.44(E)(4))

D) Material Specifications

1. All materials shall be new, and comply with the latest and applicable standards for public utility systems including, but not limited to, the Association of American Water Works (AWWA), American National Standards Institute (ANSI), American Standard of Testing and Materials (ASTM) and installed and tested according the manufacturer's recommendations and local plumbing codes.
2. All water mains less than or equal to 12-inch diameter shall be PVC with a minimum pressure rating of 150 pounds per square inch (PSI), minimum DR-18 wall thickness ratio, comply with AWWA C900, and not less than 6-inches diameter.
3. All water system valves, fittings, and service connections shall be a minimum 150 PSI working pressure rating. All iron pipe and fittings shall be wrapped with minimum 8-mil polyethylene and sealed with duct tape per AWWA C105 guidelines.
4. Water main fittings shall be ductile iron with mechanical joints and comply with AWWA C153 (fittings) and AWWA C111 (gaskets).
5. Fire hydrants shall comply with AWWA C502 for dry-barrel fire hydrants, and all water main valves shall be resilient seated gate valves complying with AWWA C509 or AWWA C515 (ductile iron).

6. Air valves on water mains shall comply with AWWA C512. Air valves on sewer force mains shall be rated by the manufacturer for performance in wastewater applications.
7. The meter/curb stops installed in the water system service connections shall be limited to Ford, McDonald, or an approved equal manufacturer. All water service connection valves and fittings shall comply with AWWA C800.
8. Gravity flow wastewater collection mains less than 18-inch diameter shall be green PVC with a minimum SDR-26 rating for wall thickness, comply with ASTM D3034, and not less than 6-inches diameter. Service connections shall be SDR-26 pipe with SDR-35 fittings.
9. Force main pipelines (4 to 12 inch diameter) shall be PVC with a minimum 150 psi working pressure and designed to withstand the potential surge generated by a sudden pump failure under maximum flow conditions. No water designated or blue pipe shall be allowed in force main applications.
10. A 6-inch end of main wastewater clean-out is acceptable in lieu of a manhole when no extensions are anticipated and shall be constructed per the District's standard detail.
11. All water mains shall have 36-inches minimum cover in unpaved areas and 30-inches minimum cover below subgrade in paved areas. All wastewater mains shall have 48-inches minimum cover.
12. Tracer detection tape shall be placed directly above all water and wastewater mains at a depth of 18-inches below finished grade. The tape shall be minimum 12-inches wide and incased in a protective, inert, plastic jacket and color-coded in accordance with APWA Uniform Color Code.
13. Gas resistant protective coatings will be required on domestic wastewater manholes where a connection is made with a pressurized force main and for manholes with 12" piping or larger. Coatings shall be Raven 405, Spraywall or approved equal. Coating shall have a uniform thickness of 124 mils and a minimum thickness of 100 mils, applied after manhole has passed the vacuum test. In lieu of interior coatings, new precast manholes containing Conshield will be accepted providing the manufacturer stencils "CONSHIELD" on the inside and outside of all manhole sections.
14. Manhole covers shall be bolted and gasketed when located within a flood hazard area or drainage way.
15. All storm drain pipes shall be reinforced concrete (RCP Class III); or dual wall ADS N-12 HDPE with a corrugated exterior and smooth interior meeting the requirements of ASTM F2648 and AASHTO M294 for use in gravity flow drainage applications. All wyes, bends, pipe size changes and transitions shall be prefabricated and shall conform to ASTM F2306 and AASHTO M294.
16. Minimum trench widths for HDPE drainage pipe shall conform to the requirements of Table 1 below.
17. The District must approve all material used for pipe embedment and trench backfill. Acceptable pipe bedding material shall include pipe bedding stone, pea gravel and in

lieu of sand, an naturally occurring or manufactured stone material conforming to ASTM C33 for stone quality and meeting the following gradation specification:

Sieve Size	Percent Retained by Weight
1/2”	0
3/8”	0-2
#4	40-85
#10	95-100

Alternate gradation tables will be considered by the District on a case by case basis; however, manufactured sand or its equivalent is not allowed in trenches with groundwater or beneath structures (manholes, inlet boxes).

E) Inspections and Testing

1. The District shall inspect and approve of the workmanship and materials utilized or involved in the construction of the water, wastewater, and drainage facilities, which may include the following:

   a. All materials used in the work;
   b. the completed trench for each section of work;
   c. pipe and tubing after under-bedding installation, over bedding, and laying of detectable tracer tape as required;
   d. fittings, fixtures, and appurtenances after installation and thrust blocking, if required, but before bedding or backfill is placed;
   e. all required pressure, vacuum, and materials testing; and,
   f. a final inspection.

2. All materials and water quality testing will be the responsibility of the Contractor, and shall be coordinated with the District’s representative. Passing reports of all required tests shall be provided to the District prior to acceptance of the facilities for operation and maintenance.

   At a minimum, the following tests are required and shall be conducted per TCEQ Chapter 217.57 for gravity flow wastewater collection systems, TCEQ Chapter 217.68 for wastewater force mains, and applicable AWWA standards for water systems:

   - Hydrostatic pressure testing of water mains in accordance with AWWA C605 (150 PSI for 2-hours) following the installation of all above ground appurtenances (meter boxes, services, fire hydrants, and flush valves) at final grade. The allowable leakage rate shall not exceed the specified values in Table 2 below, and is derived from the formulas in AWWA C605. If the pipeline under test contains sections of various diameters and multiple closed valves, the testing allowance will be the sum of the testing allowance for each pipeline size and valve.
   - In the event the water mains are pressure tested prior to completion of the meter boxes, contractor shall conduct a final pressure test of the system to 200 psi for a 20-minute duration. This test will be in addition to the 2-hour hydrostatic test requirement; and may require a second bacteriological test(s).

- Clean, disinfect, and flush the water main and appurtenances in accordance with AWWA C651. Passing bacteriological test samples must be drawn from the furthest point in the new water main from the existing system as well as at each additional 1,000 foot interval along the pipeline route. The laboratory used for bacteriological analysis and testing must be approved by the District.
- Hydrostatic pressure testing of wastewater force mains at 50 PSI above the normal operating pressure for a minimum of 4.0 hours. The leakage rate must not exceed 10.0 gallons per inch diameter per mile of pipe per day.
- Low pressure air test for all gravity sewer mains, independently of the connecting manholes. The pipeline should first be flushed and cleaned, then pressurized to 3.5 PSI, stabilized, and the air pump turned off. The testing equipment must include a pressure relief valve designed to relieve pressure from the pipeline at 10 PSI or less to avoid excessive pressure. The minimum time required for a pressure drop in the pipeline from 3.5 PSI to 2.5 PSI is summarized in Table 3 below and derived from the formulas in TCEQ Chapter 217.57 (a)(1).
- As an alternative to the low pressure air test, the District Engineer or designated representative may require or allow infiltration or exfiltration testing of the gravity sewer mains.
- Deflection (mandrel) pulls to check for excessive deflection in gravity sewer mains. The mandrel shall be pulled by hand and conducted after the final backfill has been compacted and in place for no less than 30 days. The rigid mandrel shall have an outside diameter equal to 95% of the inside diameter of the pipe.

  Contractor shall pull a mandrel test through all wastewater line after the subdivision has been paved and provide the District with a television camera report and electronic video in accordance with General Provision 1C, item 4 of the Sonterra MUD Construction and Development Standards and Procedures.
- Vacuum testing (10-inches of mercury for 2.0 minutes after vacuum pump is off) of all manholes prior to application of a coating or grout on the horizontal joints, and independently of the connecting pipelines. The vacuum must be at least 9.0 inches of mercury following the test.
- Compaction tests shall be performed on all pipeline trenches at a minimum of 500-foot intervals and at each 6-inch lift, or as directed by the District or Williamson County representative. The contractor will be required to make suitable excavation to allow access for such testing, and will be required to remove and replace the backfill as many times as necessary to achieve minimum 95% density.
- Compressive strength and slump tests for all structural concrete to meet design engineer's specifications, as applicable.
- Coating tests for all concrete manhole and lift station linings to demonstrate specified thickness, as applicable.

Table 1: Min. Trench Widths for HDPE Drainage Pipe	
Pipe Diameter (in)	Minimum Trench Width (in)
18	42
24	48
30	56
36	64
42	72

Table 2: Allowable Leakage (gals) for 2-Hrs at 150 PSI					
Length	Diameter (in)				
(ft)	6	8	12	16	18
5	0.00	0.01	0.01	0.01	0.01
10	0.01	0.01	0.02	0.03	0.03
15	0.01	0.02	0.03	0.04	0.04
20	0.02	0.03	0.04	0.05	0.06
25	0.02	0.03	0.05	0.07	0.07
50	0.05	0.07	0.10	0.13	0.15
75	0.07	0.10	0.15	0.20	0.22
100	0.10	0.13	0.20	0.26	0.30
200	0.20	0.26	0.40	0.53	0.60
300	0.30	0.40	0.60	0.79	0.89
400	0.40	0.53	0.79	1.06	1.19
500	0.50	0.66	0.99	1.32	1.49
600	0.60	0.79	1.19	1.59	1.79
700	0.70	0.93	1.39	1.85	2.09
800	0.79	1.06	1.59	2.12	2.38
900	0.89	1.19	1.79	2.38	2.68
1000	0.99	1.32	1.99	2.65	2.98
Valve	0.09	0.12	0.19	0.25	0.28

Table 3: Min. Testing Times for Low-Pressure Air Test			
Pipe Diameter (in)	Minimum Time (seconds)	Maximum Length for Minimum Time (ft)	Time for Longer Length (seconds/ft)
6	340	398	0.855
8	454	298	1.520
10	567	239	2.374
12	680	199	3.419
15	850	159	5.342
18	1020	133	7.693

4. STANDARD DETAILS

The following water and wastewater standard details have been made available by the District for the developer's Engineer to include in the construction plans and specifications. It is the responsibility of the design Engineer to ensure the appropriate use of these standard details and to provide additional details as required by the specific project.

General:

G-01 Typical Utility Assignment Detail
G-02 Water and Wastewater Main Bedding and Surface Repair Detail
G-03 Utility Crossing Installation Detail
G-04 Concrete trench Cap Detail
G-05 Pipe Encasement Detail

Water:

W-01 Single 5/8", 3/4", or 1" Water Meter Detail
W-02 Dual 5/8", 3/4", or 1" Water Meter Detail
W-03 Fire Hydrant Assembly Detail
W-04 Buried Valve, Valve Box, and Cover Detail
W-05 Water Line and Storm Sewer Line Crossing Detail
W-06 1" Thru 2" Air Release Valve Installation Detail (Developed Areas)
W-07 Dead End Line Flush Valve Detail
W-08 Thrust Block Detail
W-09 Pressure Reducing Valve (PRV) Vault Detail
W-10 2" to 4" Combination Air and Vacuum Release Valve Detail

Wastewater:

WW-01 Precast Concrete Wastewater Manhole Detail
WW-02 Wastewater Manhole with Drop Connection Detail
WW-03 Non-Bolted Wastewater Manhole Cover and Frame Detail
WW-04 Precast 48" Concentric Concrete Cone Section Detail
WW-05 Flexible "Seal Boot" Resilient Connector Detail
WW-06 Wastewater Flow Patterns for Invert Channels Detail
WW-07 End of Main Wastewater Cleanout Detail
WW-08 Wastewater Service Detail
WW-09 Wastewater Force Main Air Release Valve Installation Detail
WW-10 Manhole Vent Detail

TEMPORARY STORMWATER

Temporary Stormwater Section

Texas Commission on Environmental Quality

for Regulated Activities on the Edwards Aquifer Recharge Zone and Relating to 30 TAC §213.5(b)(4)(A), (B), (D)(I) and (G); Effective June 1, 1999

To ensure that the application is administratively complete, confirm that all fields in the form are complete, verify that all requested information is provided, consistently reference the same site and contact person in all forms in the application, and ensure forms are signed by the appropriate party.

Note: Including all the information requested in the form and attachments contributes to more streamlined technical reviews.

Signature

To the best of my knowledge, the responses to this form accurately reflect all information requested concerning the proposed regulated activities and methods to protect the Edwards Aquifer. This **Temporary Stormwater Section** is hereby submitted for TCEQ review and executive director approval. The application was prepared by:

Print Name of Customer/Agent: Michael Fisher, P.E.

Date: 10/9/24

Signature of Customer/Agent:



Regulated Entity Name: Rancho Del Cielo Phase 4B

Project Information

Potential Sources of Contamination

Examples: Fuel storage and use, chemical storage and use, use of asphaltic products, construction vehicles tracking onto public roads, and existing solid waste.

1. Fuels for construction equipment and hazardous substances which will be used during construction:

   ☒ The following fuels and/or hazardous substances will be stored on the site: Diesel Fuel, Gasoline, etc.

   These fuels and/or hazardous substances will be stored in:

   ☒ Aboveground storage tanks with a cumulative storage capacity of less than 250 gallons will be stored on the site for less than one (1) year.

☐ Aboveground storage tanks with a cumulative storage capacity between 250 gallons and 499 gallons will be stored on the site for less than one (1) year.

☐ Aboveground storage tanks with a cumulative storage capacity of 500 gallons or more will be stored on the site. An Aboveground Storage Tank Facility Plan application must be submitted to the appropriate regional office of the TCEQ prior to moving the tanks onto the project.

☐ Fuels and hazardous substances will not be stored on the site.

2. ☒ **Attachment A - Spill Response Actions**. A site specific description of the measures to be taken to contain any spill of hydrocarbons or hazardous substances is attached.

3. ☒ Temporary aboveground storage tank systems of 250 gallons or more cumulative storage capacity must be located a minimum horizontal distance of 150 feet from any domestic, industrial, irrigation, or public water supply well, or other sensitive feature.

4. ☒ **Attachment B - Potential Sources of Contamination**. A description of any activities or processes which may be a potential source of contamination affecting surface water quality is attached.

Sequence of Construction

5. ☒ **Attachment C - Sequence of Major Activities**. A description of the sequence of major activities which will disturb soils for major portions of the site (grubbing, excavation, grading, utilities, and infrastructure installation) is attached.

   ☒ For each activity described, an estimate (in acres) of the total area of the site to be disturbed by each activity is given.

   ☒ For each activity described, include a description of appropriate temporary control measures and the general timing (or sequence) during the construction process that the measures will be implemented.

6. ☒ Name the receiving water(s) at or near the site which will be disturbed or which will receive discharges from disturbed areas of the project: Glasscock Branch

Temporary Best Management Practices (TBMPs)

Erosion control examples: tree protection, interceptor swales, level spreaders, outlet stabilization, blankets or matting, mulch, and sod. Sediment control examples: stabilized construction exit, silt fence, filter dikes, rock berms, buffer strips, sediment traps, and sediment basins. Please refer to the Technical Guidance Manual for guidelines and specifications. All structural BMPs must be shown on the site plan.

7. ☒ **Attachment D – Temporary Best Management Practices and Measures**. TBMPs and measures will prevent pollution of surface water, groundwater, and stormwater. The construction-phase BMPs for erosion and sediment controls have been designed to retain sediment on site to the extent practicable. The following information is attached:

☒ A description of how BMPs and measures will prevent pollution of surface water, groundwater or stormwater that originates upgradient from the site and flows across the site.

☒ A description of how BMPs and measures will prevent pollution of surface water or groundwater that originates on-site or flows off site, including pollution caused by contaminated stormwater runoff from the site.

☒ A description of how BMPs and measures will prevent pollutants from entering surface streams, sensitive features, or the aquifer.

☒ A description of how, to the maximum extent practicable, BMPs and measures will maintain flow to naturally-occurring sensitive features identified in either the geologic assessment, TCEQ inspections, or during excavation, blasting, or construction.

8. ☒ The temporary sealing of a naturally-occurring sensitive feature which accepts recharge to the Edwards Aquifer as a temporary pollution abatement measure during active construction should be avoided.

☐ **Attachment E - Request to Temporarily Seal a Feature**. A request to temporarily seal a feature is attached. The request includes justification as to why no reasonable and practicable alternative exists for each feature.

☒ There will be no temporary sealing of naturally-occurring sensitive features on the site.

9. ☒ **Attachment F - Structural Practices**. A description of the structural practices that will be used to divert flows away from exposed soils, to store flows, or to otherwise limit runoff discharge of pollutants from exposed areas of the site is attached. Placement of structural practices in floodplains has been avoided.

10. ☒ **Attachment G - Drainage Area Map**. A drainage area map supporting the following requirements is attached:

☐ For areas that will have more than 10 acres within a common drainage area disturbed at one time, a sediment basin will be provided.

☐ For areas that will have more than 10 acres within a common drainage area disturbed at one time, a smaller sediment basin and/or sediment trap(s) will be used.

☒ For areas that will have more than 10 acres within a common drainage area disturbed at one time, a sediment basin or other equivalent controls are not attainable, but other TBMPs and measures will be used in combination to protect down slope and side slope boundaries of the construction area.

☐ There are no areas greater than 10 acres within a common drainage area that will be disturbed at one time. A smaller sediment basin and/or sediment trap(s) will be used in combination with other erosion and sediment controls within each disturbed drainage area.

☐ There are no areas greater than 10 acres within a common drainage area that will be disturbed at one time. Erosion and sediment controls other than sediment basins or sediment traps within each disturbed drainage area will be used.

11. ☐ **Attachment H - Temporary Sediment Pond(s) Plans and Calculations**. Temporary sediment pond or basin construction plans and design calculations for a proposed temporary BMP or measure have been prepared by or under the direct supervision of a Texas Licensed Professional Engineer. All construction plans and design information must be signed, sealed, and dated by the Texas Licensed Professional Engineer. Construction plans for the proposed temporary BMPs and measures are attached.

☒ N/A

12. ☒ **Attachment I - Inspection and Maintenance for BMPs.** A plan for the inspection of each temporary BMP(s) and measure(s) and for their timely maintenance, repairs, and, if necessary, retrofit is attached. A description of the documentation procedures, recordkeeping practices, and inspection frequency are included in the plan and are specific to the site and/or BMP.

13. ☒ All control measures must be properly selected, installed, and maintained in accordance with the manufacturer's specifications and good engineering practices. If periodic inspections by the applicant or the executive director, or other information indicate a control has been used inappropriately, or incorrectly, the applicant must replace or modify the control for site situations.

14. ☒ If sediment escapes the construction site, off-site accumulations of sediment must be removed at a frequency sufficient to minimize offsite impacts to water quality (e.g., fugitive sediment in street being washed into surface streams or sensitive features by the next rain).

15. ☒ Sediment must be removed from sediment traps or sedimentation ponds not later than when design capacity has been reduced by 50%. A permanent stake will be provided that can indicate when the sediment occupies 50% of the basin volume.

16. ☒ Litter, construction debris, and construction chemicals exposed to stormwater shall be prevented from becoming a pollutant source for stormwater discharges (e.g., screening outfalls, picked up daily).

Soil Stabilization Practices

Examples: establishment of temporary vegetation, establishment of permanent vegetation, mulching, geotextiles, sod stabilization, vegetative buffer strips, protection of trees, or preservation of mature vegetation.

17. ☒ **Attachment J - Schedule of Interim and Permanent Soil Stabilization Practices**. A schedule of the interim and permanent soil stabilization practices for the site is attached.

18. ☒ Records must be kept at the site of the dates when major grading activities occur, the dates when construction activities temporarily or permanently cease on a portion of the site, and the dates when stabilization measures are initiated.

19. ☒ Stabilization practices must be initiated as soon as practicable where construction activities have temporarily or permanently ceased.

Administrative Information

20. ☒ All structural controls will be inspected and maintained according to the submitted and approved operation and maintenance plan for the project.

21. ☒ If any geologic or manmade features, such as caves, faults, sinkholes, etc., are discovered, all regulated activities near the feature will be immediately suspended. The appropriate TCEQ Regional Office shall be immediately notified. Regulated activities must cease and not continue until the TCEQ has reviewed and approved the methods proposed to protect the aquifer from any adverse impacts.

22. ☒ Silt fences, diversion berms, and other temporary erosion and sediment controls will be constructed and maintained as appropriate to prevent pollutants from entering sensitive features discovered during construction.

ATTACHMENT A

Spill Response Actions

In the event of an accidental leak or spill:

- Spill must be contained and cleaned up immediately.
- Spills will not be merely buried or washed with water.
- Contractor shall take action to contain spill. Contractor may use sand or other absorbent material stockpiled on site to absorb spill. Absorbent material should be spread over the spill area to absorb the spilled product.
- In the event of an uncontained discharge the contractor shall utilize onsite equipment to construct berms downgradient of the spill with sand or other absorbent material to contain and absorb the spilled product.
- Spill containment/absorbent materials along with impacted media must be collected and stored in such a way so as not to continue to affect additional media (soil/water). Once the spill has been contained, collected material should be placed on poly or plastic sheeting until removed from the site. The impacted media and cleanup materials should be covered with plastic sheeting and the edges weighed down with paving bricks or other similarly dense objects as the material is being accumulated. This will prevent the impacted media and cleanup materials from becoming airborne in windy conditions or impacting runoff during a rain event. The stockpiled materials should not be located within an area of concentrated runoff such as along a curb line or within a swale.
- Contaminated soils and cleanup materials will be sampled for waste characterization. When the analysis results are known the contaminated soils and cleanup materials will be removed from the site and disposed in a permitted landfill in accordance with applicable regulations.
- The contractor will be required to notify the owner, who will in turn contact TCEQ to notify them in the event of a significant hazardous/reportable quantity spill. Additional notifications as required by the type and amount of spill will be conducted by owner or owner's representative.

In the event of an accidental significant or hazardous spill:

- The contractor will be required to report significant or hazardous spills in reportable quantities as soon as possible and within 24 hours to:
  - the National Response Center at (800) 424-8802
  - the TCEQ Regional Office (512) 339-2929 (if during business hours: 8 AM to 5 PM) or
  - the State Emergency Response Center (800) 832-8224 (if after hours)
- Reportable quantities can be found at the following link: https://www.tceq.texas.gov/response/spills/spill_rq.html

- Contaminated soils will be sampled for waste characterization. When the analysis results are known the contaminated soils will be removed from the site and disposed in a permitted landfill in accordance with applicable regulations.

Additional guidance can be obtained from TCEQ's Technical Guidance Manual (TGM) RG-348 (2005) Section 1.4.16. Contractor shall review this section.

ATTACHMENT B

POTENTIAL SOURCES OF CONTAMINATION

Potential Source
- Asphalt products used on this project.

Preventative Measure
- After placement of asphalt, emulsion or coatings, the contractor will be responsible for immediate cleanup should an unexpected rain occur. For the duration of the asphalt product curing time, the contractor will maintain standby personnel and equipment to contain any asphalt wash-off should an unexpected rain occur. The contractor will be instructed not to place asphalt products on the ground within 48 hours of a forecasted rain.

Potential Source
- Oil, grease, fuel and hydraulic fluid contamination from construction equipment and vehicle dripping.

Preventative Measure
- Vehicle maintenance when possible will be performed within the construction staging area.
- Construction vehicles and equipment shall be checked regularly for leaks and repaired immediately.

Potential Source
- Accidental leaks or spills of oil, petroleum products and substances listed under 40 CFR parts 110, 117, and 302 used or stored temporarily on site.

Preventative Measure
- Contractor to incorporate into regular safety meetings, a discussion of spill prevention and appropriate disposal procedures.

- Contractor's superintendent or representative overseer shall enforce proper spill prevention and control measures.
- Hazardous materials and wastes shall be stored in covered containers and protected from vandalism.
- A stockpile of spill cleanup materials shall be stored on site where it will be readily accessible.

Potential Source
- Miscellaneous trash and litter from construction workers and material wrappings.

Preventive Measure
- Trash containers will be placed throughout the site to encourage proper trash disposal.

Potential Source
- Construction debris.

Preventive Measure
- Construction debris will be monitored daily by contractor. Debris will be collected weekly and placed in disposal bins. Situations requiring immediate attention will be addressed on a case by case basis.

Potential Source
- Spills/Overflow of waste from portable toilets

Preventative Measure
- Portable toilets will be placed away from high traffic vehicular areas and storm drain inlets.
- Portable toilets will be placed on a level ground surface.
- Portable toilets will be inspected regularly for leaks and will be serviced and sanitized at time intervals that will maintain sanitary conditions.

ATTACHMENT C

SEQUENCE OF MAJOR ACTIVITIES

The sequence of major activities which disturb soil during construction on this site are listed below.

1) Set erosion controls – approximately 979LF of silt fence and 100 LF of rock berm
2) Clear and grub – approximately 3.91 acres
3) Rough grade roadway – approximately 0.50 acres
4) Rough grade lots – approximately 1.47 acres
5) Trench utilities – approximately 2,084 LF
6) Install water, wastewater, and storm – approximately 2,084 LF
7) Install sub base/base for road/parking areas – approximately 0.45 acres
8) Pave Roadway/Parking Area – approximately 0.36 acres
9) Site cleanup – approximately 3.91 acres
10) Remove erosion controls – approximately 979 LF of silt fence and 100 LF of rock berm

ATTACHMENT D

TEMPORARY BEST MANAGEMENT PRACTICES AND MEASURES

Please see the Erosion Control sheets included in the Construction Plans Section for TBMP layout and the responses below for more details.

Due to existing topography, upgradient stormwater from adjacent property along the southeastern edge of the site enters the Rancho Del Cielo property and flows from east to west along the southern edges of the Phase 1 project limits. As this upgradient area is currently undeveloped and undisturbed, sedimentation from off-site areas is not anticipated. All TBMPs utilized are adequate for the drainage areas served. No upgradient stormwater is anticipated to flow through or adjacent to the Phase 4B Project limits.

Site preparation, which is the initiation of all activity on the project, will disturb the largest amount of soil. Therefore, before any of this work can begin, the clearing and grading contractor will be responsible for the installation of all on-site control measures. The methodology for pollution prevention of on-site stormwater will include: (1) erection of silt fences along the downgradient boundary of construction activities for temporary erosion and sedimentation controls, (2) installation of rock berms downgradient from areas of concentrated stormwater flow for temporary erosion control, (3) installation of stabilized construction entrance/exit(s) to reduce the dispersion of sediment from the site, and (4) installation of construction staging area(s).

Prior to the initiation of construction, all previously installed control measures will be repaired or reestablished for their designed or intended purpose. This work, which is the remainder of all activities on the project, may also disturb additional soil. The construction contractor will be responsible for the installation of all remaining on-site control measures that includes installation of the concrete truck washout pit(s), as construction phasing warrants.

Temporary measures are intended to provide a method of slowing the flow of runoff from the construction site in order to allow sediment and suspended solids to settle out of the runoff. By containing the sediment and solids within the site, they will not enter the aquifer, surface streams and/or sensitive features that may exist downstream of the site.

Inlet protection will be installed and utilized to reduce the dispersion of sediment from entering the storm sewer system during construction activities.

Temporary measures are intended to provide a method of slowing the flow of runoff from the construction site in order to allow sediment and suspended solids to settle out of the runoff. By containing the sediment and solids within the site, they will not enter the aquifer, surface streams and/or sensitive features that may exist downstream of the site.

BMP measures utilized in this plan are intended to allow stormwater to continue downstream after passing through the BMPs. This will allow stormwater runoff to continue downgradient to streams or features that may exist downstream of the site. Features discovered during construction will be reported and assessed in accordance with applicable regulations.

ATTACHMENT F

STRUCTURAL PRACTICES

The following structural measures will be installed prior to the initiation of site preparation activities:

- Erection of silt fences along the downgradient boundary of construction activities and rock berms for secondary protection, as located on the Erosion Control sheets and illustrated on the Construction Details - Erosion Controls sheet.
- Installation of stabilized construction entrance/exit(s) and construction staging area(s), as located on the Erosion Control sheets and illustrated on the Construction Details - Erosion Controls sheet.

The following structural measures will be installed at the initiation of construction activities or as appropriate based on the construction sequencing:

- Installation of inlet protection, as required and located on the Erosion Control sheets and illustrated on the Construction Details - Erosion Controls sheet.
- Installation of concrete truck washout pit(s), as required and located on the Erosion Control sheets and illustrated on the Construction Details - Erosion Controls sheet.
- Installation of rock berm, as required and located on the Erosion Control sheets and illustrated on the Construction Details – Erosion Controls sheet.

ATTACHMENT G

EXISTING CONDITIONS DRAINAGE STUDY

LEGEND

- SD — STORM DRAIN LINE
- SD — SD MANHOLE
- SD INLET
- DRAINAGE FLOW ARROW
- DRAINAGE AREA BOUNDARY
- EXISTING DRAINAGE AREA
- 786 — PROPOSED CONTOUR LINE
- 786 — EXISTING CONTOUR LINE
- TRAVEL PATH
- DA-X / 3.33 — DRAINAGE AREA DESIGNATION / AREA IN ACRES
- Tc — TIME OF CONCENTRATION

TIME OF CONCENTRATION CALCULATOR - EXISTING CONDITIONS

Drainage Number	Sheet Flow					Shallow Concentrated Flow					Channelized Flow				Total Time (min)	Lag Time (min)
	Length (ft)	Mannings "n"	P_2(in)	Slope (ft/ft)	Time (min)	Length (ft)	P/U	Slope (ft/ft)	Velocity (ft/s)	Time (min)	Length (ft)	Slope (ft/ft)	Velocity (ft/s)	Time (min)		
EX-1	100.0	0.15	3.44	0.020	9.4	3000.0	U	0.023	2.4	20.4	100.0	0.023	4.6	0.4	30.2	18.1
EX-2	100.0	0.15	3.44	0.010	12.5	1500.0	U	0.019	2.2	11.2	1400.0	0.016	3.8	6.1	44.8	26.9
											3600.0	0.011	4.0	15.0		

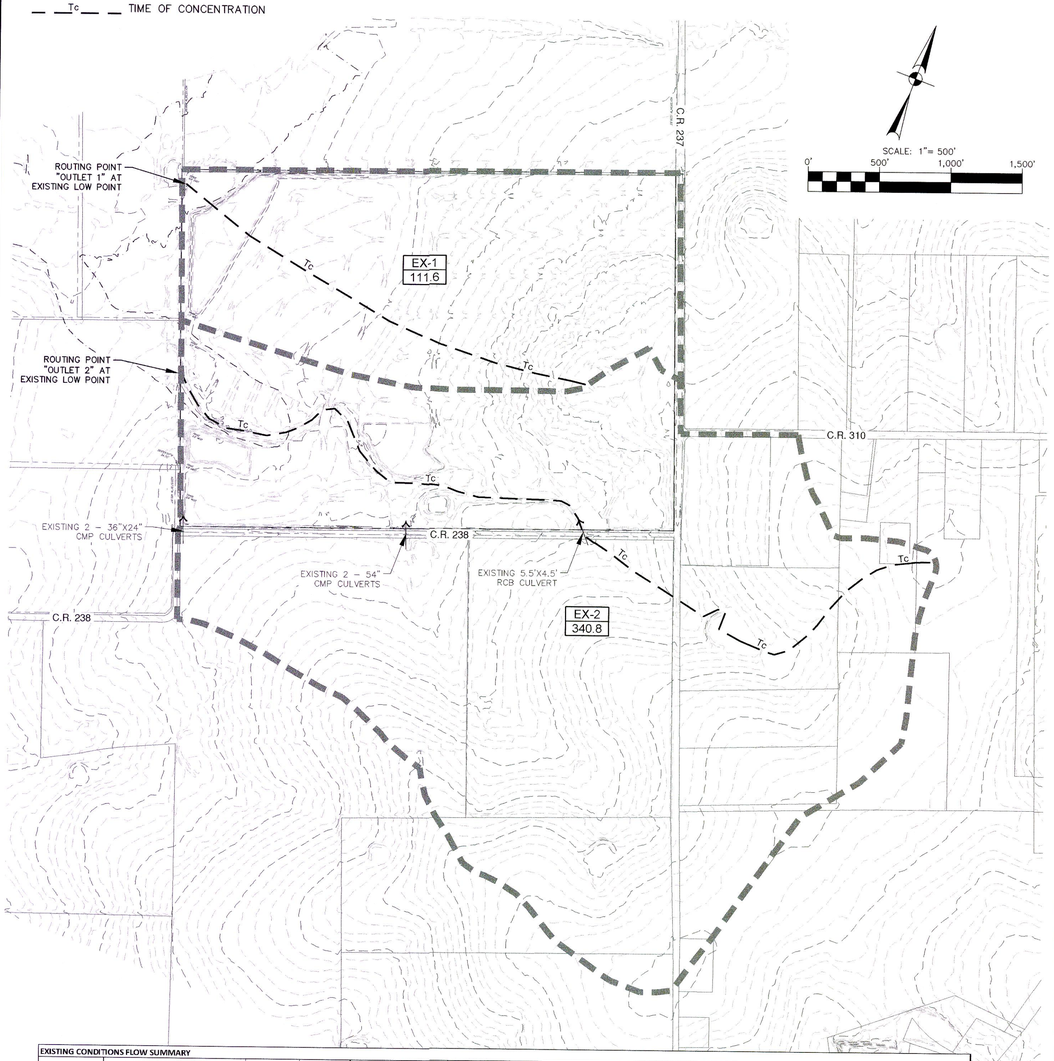

EXISTING CONDITIONS FLOW SUMMARY

Hydrologic Element	Element Description	Downstream Element	Drainage Area (ac)	Composite Curve Number CN	Lag Time (min)	Impervious Cover %	Cumulative Area (ac)	100 YEAR STORM		25 YEAR STORM		10 YEAR STORM		2 YEAR STORM	
								Runoff Per Drainage Area (cfs)	Routed Cumulative Runoff (cfs)	Runoff Per Drainage Area (cfs)	Routed Cumulative Runoff (cfs)	Runoff Per Drainage Area (cfs)	Routed Cumulative Runoff (cfs)	Runoff Per Drainage Area (cfs)	Routed Cumulative Runoff (cfs)
EX-1	Drainage Area EX-1	OUTLET 1	111.6	80	18.1	1.0%		580		403		297		122	
OUTLET 1	**Outlet 1 @ Existing Low Point**						**111.6**		**580**		**403**		**297**		**122**
EX-2	Drainage Area EX-2	OUTLET 2	340.8	80	26.9	2.9%		1476		1029		760		314	
OUTLET 2	**Outlet 2 @ Existing Low Point**						**340.8**		**1476**		**1029**		**760**		**314**

DEVELOPED CONDITIONS DRAINAGE STUDY

NOTES:

1. THE LOCATIONS OF EXISTING UNDERGROUND UTILITIES ARE SHOWN IN AN APPROXIMATE WAY ONLY AND HAVE NOT BEEN INDEPENDENTLY VERIFIED BY THE OWNER OR ITS REPRESENTATIVE. THE CONTRACTOR SHALL DETERMINE THE EXACT LOCATION OF ALL EXISTING UTILITIES BEFORE COMMENCING WORK, AND AGREES TO BE FULLY RESPONSIBLE FOR ANY AND ALL DAMAGES WHICH MIGHT BE ASSOCIATED BY THE CONTRACTOR'S FAILURE TO EXACTLY LOCATE AND PRESERVE ANY AND ALL UNDERGROUND UTILITIES.
2. EXISTING CONTOUR INFORMATION SHOWN IS AT 2 FOOT INTERVALS.
3. DRAINAGE CALCULATIONS ARE IN ACCORDANCE WITH THE 2018 WILLIAMSON COUNTY SUBDIVISION REGULATIONS, EFFECTIVE FOR THE RANCHO DEL CIELO PRELIMINARY PLAT SUBMITTED TO WILLIAMSON COUNTY ON OCTOBER 19, 2018 AND APPROVED AT THE WILLIAMSON COUNTY COMMISSIONERS COURT ON AUGUST 27, 2019.

TIME OF CONCENTRATION CALCULATOR - DEVELOPED CONDITIONS

Drainage Number	Sheet Flow					Shallow Concentrated Flow					Channelized/Pipe Flow				Total Time (min)	Lag Time (min)
	Length (ft)	Manning s "n"	P_2(in)	Slope (ft/ft)	Time (min)	Length (ft)	P/U	Slope (ft/ft)	Velocity (ft/s)	Time (min)	Length (ft)	Slope (ft/ft)	Velocity (ft/s)	Time (min)		
DA-1	100	0.15	3.44	0.011	12.0	130	U	0.013	1.8	1.2	4150	0.015	5.5	12.6	25.8	15.5
OS-1A	100	0.15	3.44	0.010	12.5	100	U	0.010	1.6	1.0	-	-	-	-	13.5	8.1
OS-1B	50	0.15	3.44	0.022	5.2	0	U	0.010	1.6	0.0	1455	0.02	5.7	4.2	9.4	5.6
DA-2A	65	0.15	3.44	0.015	7.5	75	U	0.013	1.8	0.7	1350	0.020	6.0	3.7	11.9	7.1
DA-2B	100	0.15	3.44	0.028	8.3	125	U	0.015	2.0	1.1	2425	0.020	6.0	6.7	16.1	9.7
OS-2	100	0.15	3.44	0.010	12.5	1500	U	0.019	2.2	11.2	1400	0.016	3.8	6.1	44.8	26.9
											3600	0.011	4.0	15.0		

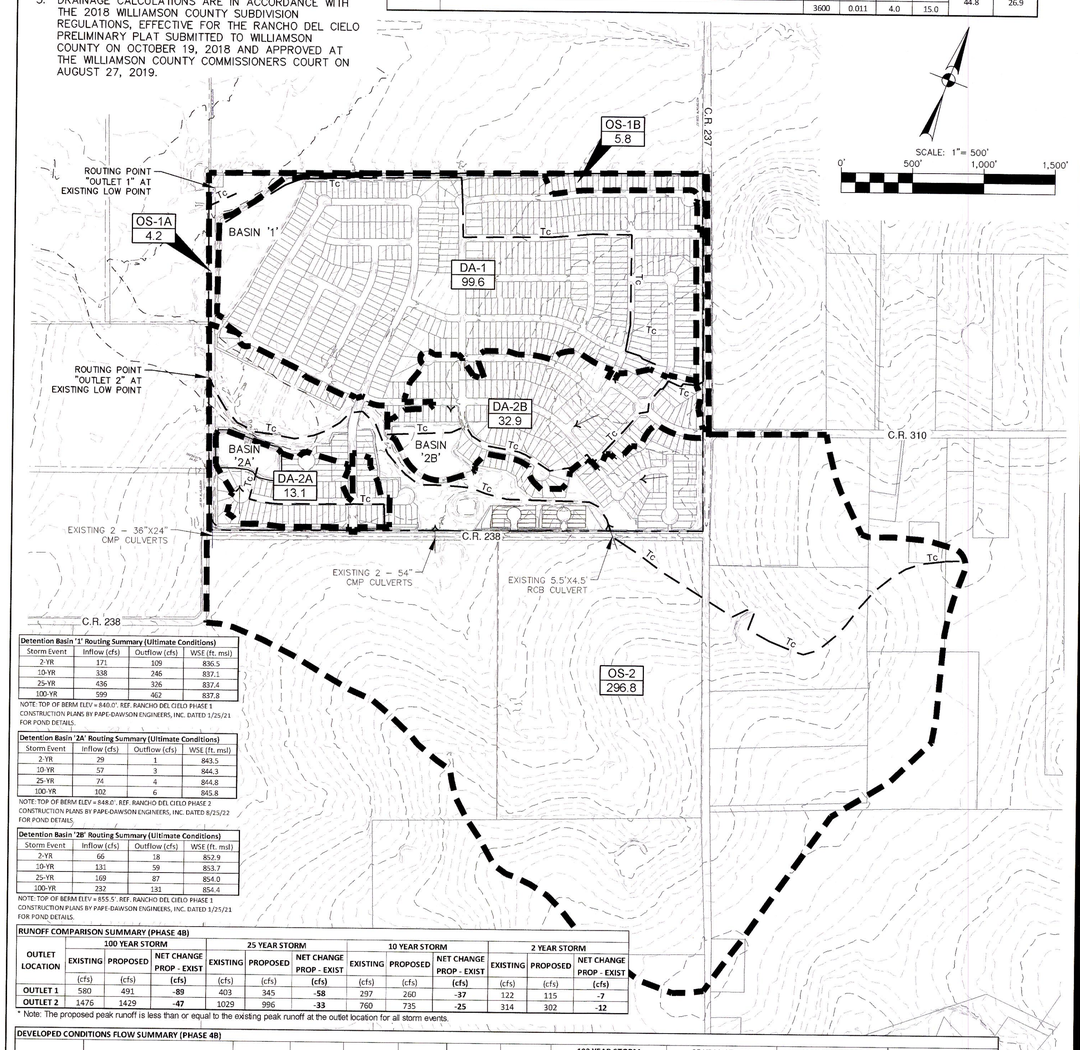

Detention Basin '1' Routing Summary (Ultimate Conditions)

Storm Event	Inflow (cfs)	Outflow (cfs)	WSE (ft. msl)
2-YR	171	109	836.5
10-YR	338	246	837.1
25-YR	436	326	837.4
100-YR	599	462	837.8

NOTE: TOP OF BERM ELEV = 840.0'. REF. RANCHO DEL CIELO PHASE 1 CONSTRUCTION PLANS BY PAPE-DAWSON ENGINEERS, INC. DATED 1/25/21 FOR POND DETAILS.

Detention Basin '2A' Routing Summary (Ultimate Conditions)

Storm Event	Inflow (cfs)	Outflow (cfs)	WSE (ft. msl)
2-YR	29	1	843.5
10-YR	57	3	844.3
25-YR	74	4	844.8
100-YR	102	6	845.8

NOTE: TOP OF BERM ELEV = 848.0'. REF. RANCHO DEL CIELO PHASE 2 CONSTRUCTION PLANS BY PAPE-DAWSON ENGINEERS, INC. DATED 8/25/22 FOR POND DETAILS.

Detention Basin '2B' Routing Summary (Ultimate Conditions)

Storm Event	Inflow (cfs)	Outflow (cfs)	WSE (ft. msl)
2-YR	66	18	852.9
10-YR	131	59	853.7
25-YR	169	87	854.0
100-YR	232	131	854.4

NOTE: TOP OF BERM ELEV = 855.5'. REF. RANCHO DEL CIELO PHASE 1 CONSTRUCTION PLANS BY PAPE-DAWSON ENGINEERS, INC. DATED 1/25/21 FOR POND DETAILS.

RUNOFF COMPARISON SUMMARY (PHASE 4B)

OUTLET LOCATION	100 YEAR STORM			25 YEAR STORM			10 YEAR STORM			2 YEAR STORM		
	EXISTING	PROPOSED	NET CHANGE PROP - EXIST	EXISTING	PROPOSED	NET CHANGE PROP - EXIST	EXISTING	PROPOSED	NET CHANGE PROP - EXIST	EXISTING	PROPOSED	NET CHANGE PROP - EXIST
	(cfs)	(cfs)	(cfs)	(cfs)	(cfs)	(cfs)	(cfs)	(cfs)	(cfs)	(cfs)	(cfs)	(cfs)
OUTLET 1	580	491	**-89**	403	345	**-58**	297	260	**-37**	122	115	**-7**
OUTLET 2	1476	1429	**-47**	1029	996	**-33**	760	735	**-25**	314	302	**-12**

* Note: The proposed peak runoff is less than or equal to the existing peak runoff at the outlet location for all storm events.

DEVELOPED CONDITIONS FLOW SUMMARY (PHASE 4B)

Hydrologic Element	Element Description	Downstream Element	Drainage Area (ac)	Composite Curve Number CN	Lag Time (min)	Impervious Cover %	Cumulative Area (ac)	100 YEAR STORM		25 YEAR STORM		10 YEAR STORM		2 YEAR STORM	
								Runoff Per Drainage Area (cfs)	Routed Cumulative Runoff (cfs)	Runoff Per Drainage Area (cfs)	Routed Cumulative Runoff (cfs)	Runoff Per Drainage Area (cfs)	Routed Cumulative Runoff (cfs)	Runoff Per Drainage Area (cfs)	Routed Cumulative Runoff (cfs)
OS-1A	Drainage Area OS-1A	OUTLET 1	4.2	80	8.1	0.0%		29		20		15		6	
OS-1B	Drainage Area OS-1B	OUTLET 1	6.0	80	5.6	49.0%		48		35		27		13	
DA-1	Drainage Area DA-1	BASIN 1	99.6	80	15.5	56.0%		599		436		338		171	
BASIN 1	Proposed Detention Basin 1	OUTLET 1							462		326		246		109
OUTLET 1	**Outlet 1 @ Existing Low Point**						**109.8**		**491**		**345**		**260**		**115**
OS-2	Drainage Area OS-2	OUTLET 2	296.8	80	26.9	7.5%		1295		906		673		284	
DA-2A	Drainage Area DA-2A	BASIN 2A	13.1	80	7.1	54.0%		102		74		57		29	
BASIN 2A	Proposed Detention Basin 2A	OUTLET 2							6		4		3		1
DA-2B	Drainage Area DA-2B	BASIN 2B	32.7	80	9.7	54.0%		232		169		131		66	
BASIN 2B	Proposed Detention Basin 2B	OUTLET 2							131		87		59		18
OUTLET 2	**Outlet 2 @ Existing Low Point**						**342.6**		**1429**		**996**		**735**		**302**

NO. REVISION | DATE

STATE OF TEXAS
JENNIFER C. FRANKLIN
118838
LICENSED PROFESSIONAL ENGINEER
9/25/24

PAPE-DAWSON ENGINEERS
AUSTIN | SAN ANTONIO | HOUSTON | FORT WORTH | DALLAS
10801 N MOPAC EXPY, BLDG 3, STE. 200 | AUSTIN, TX 78759 | 512.454.8711
TBPE FIRM REGISTRATION #470 | TBPLS FIRM REGISTRATION #10028801

RANCHO DEL CIELO - PHASE 4B
WILLIAMSON COUNTY, TEXAS
OVERALL DRAINAGE STUDY

CITY JOB No.
JOB NO. 51118-61
DATE SEPTEMBER 2024
DESIGNER TS
CHECKED ____ DRAWN CE/JM
SHEET 14 OF 36

Date: Sep 24, 2024, 4:00pm User ID: tstephens
File: H:\Projects\51118-001_Phase 4\301 Construction Documents\Civil\(2051118-61.dwg

THIS DOCUMENT HAS BEEN PRODUCED FROM MATERIAL THAT WAS STORED AND/OR TRANSMITTED ELECTRONICALLY AND MAY HAVE BEEN INADVERTENTLY ALTERED. RELY ONLY ON FINAL HARDCOPY MATERIALS BEARING THE CONSULTANT'S ORIGINAL SIGNATURE AND SEAL.

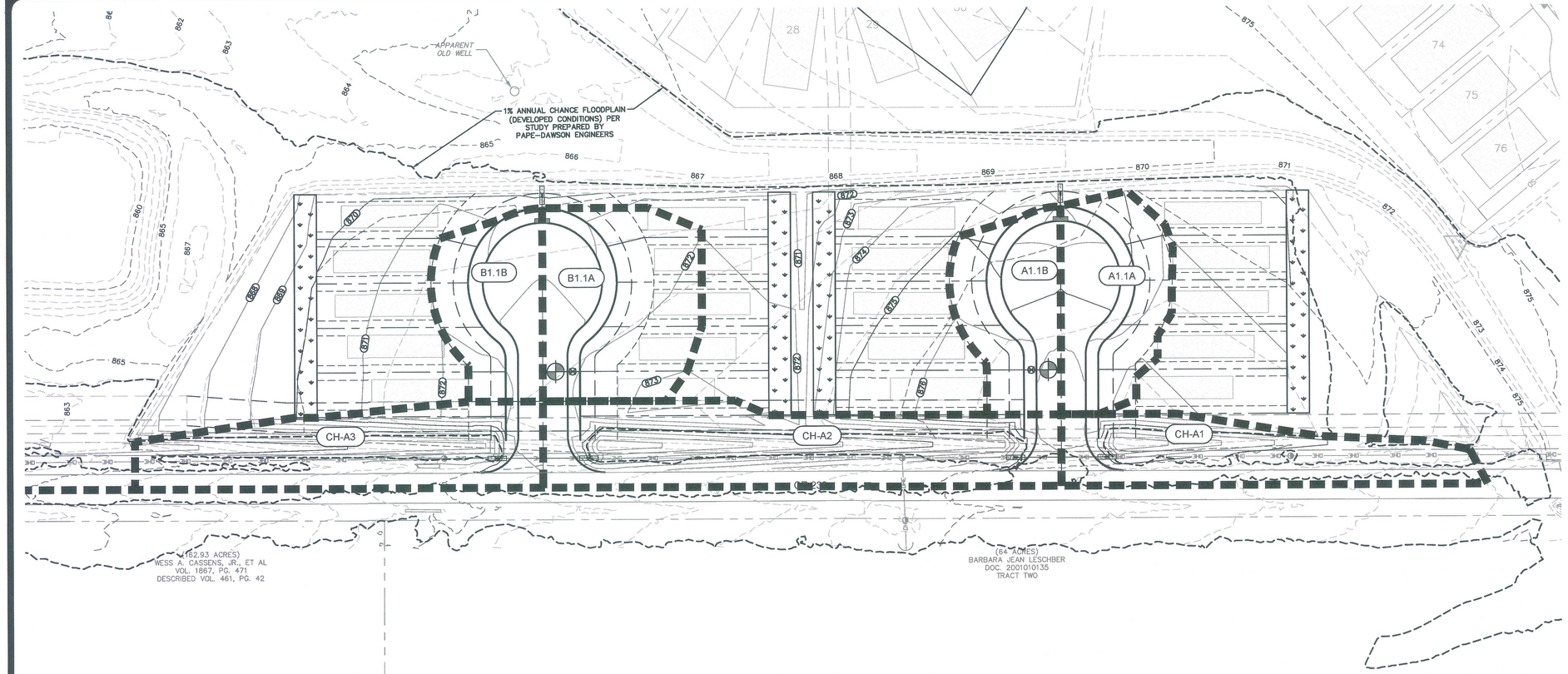

SCALE: 1" = 40'

0' 40' 80' 120'

LEGEND

- SD — STORM DRAIN LINE
- SD — SD MANHOLE
- SD INLET
- DRAINAGE FLOW ARROW
- DRAINAGE AREA BOUNDARY
- XX-X — DRAINAGE AREA
- PROPOSED CONTOUR LINE
- EXISTING CONTOUR LINE
- 1% ANNUAL CHANCE FLOODPLAIN (DEVELOPED CONDITIONS) PER STUDY PREPARED BY PAPE-DAWSON ENGINEERS.

NOTES

1. THE LOCATIONS OF EXISTING UNDERGROUND UTILITIES ARE SHOWN IN AN APPROXIMATE WAY ONLY AND HAVE NOT BEEN INDEPENDENTLY VERIFIED BY THE OWNER OR ITS REPRESENTATIVE. THE CONTRACTOR SHALL DETERMINE THE EXACT LOCATION OF ALL EXISTING UTILITIES BEFORE COMMENCING WORK, AND AGREES TO BE FULLY RESPONSIBLE FOR ANY AND ALL DAMAGES WHICH MIGHT BE ASSOCIATED BY THE CONTRACTOR'S FAILURE TO EXACTLY LOCATE AND PRESERVE ANY AND ALL UNDERGROUND UTILITIES.
2. EXISTING CONTOUR INFORMATION SHOWN IS AT 1 FOOT INTERVALS.

Rancho Del Cielo Phase 4B							10 year					25 year					100 year				
D.A.	AREA	# homes	L. Street	IC	PC	%IC	Pervious		Impervious		Weighted C	Pervious		Impervious		Weighted C	Pervious		Impervious		Weighted C
							C	PC * C	C	IC * C		C	PC * C	C	IC * C		C	PC * C	C	IC * C	
ULTIMATE CONDITION DRAINAGE AREAS																					
A1.1A	0.22	0.0	130	0.13	0.09	56.92%	0.35	0.03	0.82	0.10	0.62	0.39	0.04	0.87	0.11	0.66	0.46	0.04	0.96	0.12	0.74
A1.1B	0.19	0.0	130	0.12	0.07	61.13%	0.35	0.03	0.82	0.10	0.64	0.39	0.03	0.87	0.10	0.68	0.46	0.03	0.96	0.11	0.77
A1.1	0.41	0.0	260	0.24	0.17	58.87%	0.35	0.06	0.82	0.20	0.63	0.39	0.07	0.87	0.21	0.67	0.46	0.08	0.96	0.23	0.75
B1.1A	0.30	2.5	120	0.18	0.12	59.09%	0.35	0.04	0.82	0.15	0.63	0.39	0.05	0.87	0.15	0.67	0.46	0.06	0.96	0.17	0.76
B1.1B	0.18	0.0	120	0.11	0.07	62.35%	0.35	0.02	0.82	0.09	0.64	0.39	0.03	0.87	0.10	0.69	0.46	0.03	0.96	0.11	0.77
B1.1	0.48	2.5	240	0.29	0.19	60.32%	0.35	0.07	0.82	0.24	0.63	0.39	0.07	0.87	0.25	0.68	0.46	0.09	0.96	0.28	0.76
CH-A1	0.25	0.0	286	0.08	0.17	32.61%	0.35	0.06	0.82	0.07	0.50	0.39	0.07	0.87	0.07	0.55	0.46	0.08	0.96	0.08	0.62
CH-A2	0.42	0.0	348	0.12	0.30	28.83%	0.35	0.10	0.82	0.10	0.49	0.39	0.12	0.87	0.11	0.53	0.46	0.14	0.96	0.12	0.60
CH-A3	0.29	0.0	275	0.09	0.20	29.42%	0.35	0.07	0.82	0.07	0.49	0.39	0.08	0.87	0.07	0.53	0.46	0.09	0.96	0.08	0.61

DRAINAGE AREA	INLET NUMBER	AREA (acres)	COMPOSITE C			A·C10	A·C25	A·C100	SHEET FLOW				SHALLOW CONCENTRATED FLOW				CHANNELIZED FLOW					Cumulative	INTENSITY			DISCHARGE		
			C10	C25	C100				Length (ft)	Manning's (n)	Slope ft/ft	Tc (min)	Length (ft)	Paved/ Unpaved	Slope ft/ft	Tc (min)	Length (ft)	Manning's (n)	Slope ft/ft	Velocity ft/s	Tc (min)	Tc (min)	I 10yr (in/hr)	I 25yr (in/hr)	I 100yr (in/hr)	Q 10 (cfs)	Q 25 (cfs)	Q 100 (cfs)
ULTIMATE CONDITION DRAINAGE AREAS																												
A1.1A	A1.1A	0.22	0.62	0.66	0.74	0.14	0.15	0.16	43	0.24	0.031	5.9	0	U	0.010	0.0	90	0.02	0.020	4.1	0.4	6.25	8.1	9.5	11.9	1.1	1.4	2.0
A1.1B	A1.1B	0.19	0.64	0.68	0.77	0.12	0.13	0.15	35	0.24	0.015	6.7	0	U	0.010	0.0	156	0.02	0.012	3.2	0.8	7.49	7.6	9.0	11.4	0.9	1.2	1.7
A1.1	A1.1	0.41	0.63	0.67	0.75	0.26	0.28	0.31	-	-	-	-	-	-	-	-	-	-	-	-	-	7.49	7.6	9.0	11.4	2.0	2.5	3.5
B1.1A	B1.1A	0.30	0.63	0.67	0.76	0.19	0.20	0.23	50	0.24	0.034	6.4	0	U	0.010	0.0	83	0.02	0.017	3.8	0.4	6.76	7.9	9.3	11.7	1.5	1.9	2.6
B1.1B	B1.1B	0.18	0.64	0.69	0.77	0.12	0.12	0.14	35	0.24	0.015	6.7	0	U	0.010	0.0	146	0.02	0.017	3.8	0.6	7.31	7.7	9.1	11.4	0.9	1.1	1.6
B1.1	B1.1	0.48	0.63	0.68	0.76	0.30	0.33	0.37	-	-	-	-	-	-	-	-	-	-	-	-	-	7.31	7.7	9.1	11.4	2.3	3.0	4.2
CH-A1	CH-A1	0.25	0.50	0.55	0.62	0.13	0.14	0.16	10	0.24	0.020	2.2					230	-	-	4.0	1.0	5.00	8.6	10.1	12.5	1.1	1.4	2.0
CH-A2	CH-A2	0.42	0.49	0.53	0.60	0.20	0.22	0.25	10	0.24	0.020	2.2					285			3.0	1.6	5.00	8.6	10.1	12.5	1.7	2.2	3.2
CH-A3	CH-A3	0.29	0.49	0.53	0.61	0.14	0.15	0.18	10	0.24	0.020	2.2					240			4.5	0.9	5.00	8.6	10.1	12.5	1.2	1.6	2.2

PAPE-DAWSON ENGINEERS
AUSTIN | SAN ANTONIO | HOUSTON | FORT WORTH | DALLAS
10801 N MOPAC EXPY., BLDG 3, STE 200 | AUSTIN, TX 78759 | 512.454.8711
TBPE FIRM REGISTRATION #470 | TBPLS FIRM REGISTRATION #10028801

NO. REVISION DATE

STATE OF TEXAS
JENNIFER C. FRANKLIN
118838
LICENSED PROFESSIONAL ENGINEER
9-30-24

RANCHO DEL CIELO - PHASE 4B
WILLIAMSON COUNTY, TEXAS

DRAINAGE AREA MAP

CITY JOB No.
JOB NO. 51118-61
DATE SEPTEMBER 2024
DESIGNER TS
CHECKED DRAWN CE/JM
SHEET 15 OF 36

Date: Sep 30, 2024, 3:55pm User ID: tstephens
File: H:\Projects\511\18\60_Phase 5\301 Construction Documents\Civil\20511118-61.dwg

THIS DOCUMENT HAS BEEN PRODUCED FROM MATERIAL THAT WAS STORED AND/OR TRANSMITTED ELECTRONICALLY AND MAY HAVE BEEN INADVERTENTLY ALTERED. RELY ONLY ON FINAL HARDCOPY MATERIALS BEARING THE CONSULTANT'S ORIGINAL SIGNATURE AND SEAL.

STREET FLOW AND INLET CALCULATIONS
100 YEAR STORM

Inlet No.	Inlet Type	Drainage Area	Q 100 (cfs)	Q pass (cfs)	Q total (cfs)	STREET CAPACITY: Street Width F-F (ft)	Crown Type	Curb Height (ft)	Gutter Slope (%)	a (ft)	Yo (ft)	Crown Height (ft)	INLET ON GRADE CAPACITY: Eo	S'w	Sx	Se	LT	L	E	Qi	Qpass (cfs)	Pass to Inlet #	SUMP INLET CAPACITY: Qtotal (cfs)	CURB (with Depression) Length (ft)	d (ft)	d (ft) (d ≤ h + a)
ULTIMATE CONDITION DRAINAGE AREAS																										
A1.1A		0.22	2.0		2.0	33	P	0.50	1.20%	0.42	0.30	0.50	-	-	-	-	-	-	-	-	-					
A1.1B		0.19	1.7		1.7	33	P	0.50	1.20%	0.42	0.28	0.50	-	-	-	-	-	-	-	-	-					
A1.1	S-1	0.41	3.5		3.5	-	-	-	-	-	-	-	-	-	-	-	-	-	-	-	-		3.5	10	0.24	0.24
B1.1A		0.30	2.6		2.6	33	P	0.50	1.80%	0.42	0.31	0.50	-	-	-	-	-	-	-	-	-					
B1.1B		0.18	1.6		1.6	33	P	0.50	2.55%	0.42	0.24	0.50	-	-	-	-	-	-	-	-	-					
B1.1	S-1	0.48	4.2		4.2	-	-	-	-	-	-	-	-	-	-	-	-	-	-	-	-		4.2	10	0.27	0.27

STREET FLOW AND INLET CALCULATIONS
25 YEAR STORM

Inlet No.	Inlet Type	Drainage Area	Q 25 (cfs)	Q pass (cfs)	Q total (cfs)	STREET CAPACITY: Street Width F-F (ft)	Crown Type	Curb Height (ft)	Gutter Slope (%)	a (ft)	Yo (ft)	Crown Height (ft)	INLET ON GRADE CAPACITY: Eo	S'w	Sx	Se	LT	L	E	Qi	Qpass (cfs)	Pass to Inlet #	SUMP INLET CAPACITY: Qtotal (cfs)	CURB (with Depression) Length (ft)	d (ft)	d (ft) (d ≤ h + a)
ULTIMATE CONDITION DRAINAGE AREAS																										
A1.1A		0.22	1.4		1.4	33	P	0.50	1.20%	0.42	0.27	0.50	-	-	-	-	-	-	-	-	-					
A1.1B		0.19	1.2		1.2	33	P	0.50	1.20%	0.42	0.25	0.50	-	-	-	-	-	-	-	-	-					
A1.1	S-1	0.41	2.5		2.5	-	-	-	-	-	-	-	-	-	-	-	-	-	-	-	-		2.5	10	0.19	0.19
B1.1A		0.30	1.9		1.9	33	P	0.50	1.80%	0.42	0.27	0.50	-	-	-	-	-	-	-	-	-					
B1.1B		0.18	1.1		1.1	33	P	0.50	2.55%	0.42	0.22	0.50	-	-	-	-	-	-	-	-	-					
B1.1	S-1	0.48	3.0		3.0	-	-	-	-	-	-	-	-	-	-	-	-	-	-	-	-		3.0	10	0.22	0.22

STREET FLOW AND INLET CALCULATIONS
10 YEAR STORM

Inlet No.	Inlet Type	Drainage Area	Q 10 (cfs)	Q pass (cfs)	Q total (cfs)	STREET CAPACITY: Street Width F-F (ft)	Crown Type	Curb Height (ft)	Gutter Slope (%)	a (ft)	Yo (ft)	Crown Height (ft)	Ponded Width (ft)	INLET ON GRADE CAPACITY: Eo	S'w	Sx	Se	LT	L	E	Qi	Qpass (cfs)	Pass to Inlet #	SUMP INLET CAPACITY: Qtotal (cfs)	CURB (with Depression) Length (ft)	d (ft)	d (ft) (d ≤ h + a)
ULTIMATE CONDITION DRAINAGE AREAS																											
A1.1A		0.22	1.1		1.1	33	P	0.50	1.20%	0.42	0.25	0.50	4.72	-	-	-	-	-	-	-	-	-					
A1.1B		0.19	0.9		0.9	33	P	0.50	1.20%	0.42	0.23	0.50	4.41	-	-	-	-	-	-	-	-	-					
A1.1	S-1	0.41	2.0		2.0	-	-	-	-	-	-	-	-	-	-	-	-	-	-	-	-	-		2.0	10	0.17	0.17
B1.1A		0.30	1.5		1.5	33	P	0.50	1.80%	0.42	0.25	0.50	4.91	-	-	-	-	-	-	-	-	-					
B1.1B		0.18	0.9		0.9	33	P	0.50	2.55%	0.42	0.20	0.50	3.76	-	-	-	-	-	-	-	-	-					
B1.1	S-1	0.48	2.3		2.3	-	-	-	-	-	-	-	-	-	-	-	-	-	-	-	-	-		2.3	10	0.19	0.19

NO. | REVISION | DATE

STATE OF TEXAS
JENNIFER C. FRANKLIN
116838
LICENSED PROFESSIONAL ENGINEER
9-25-24

PAPE-DAWSON ENGINEERS
AUSTIN | SAN ANTONIO | HOUSTON | FORT WORTH | DALLAS
10801 N MOPAC EXPY, BLDG 3, STE 200 | AUSTIN, TX 78759 | 512.454.8711
TBPE FIRM REGISTRATION #470 | TBPLS FIRM REGISTRATION #10028801

RANCHO DEL CIELO - PHASE 4B
WILLIAMSON COUNTY, TEXAS

DRAINAGE AREA CALCULATIONS

CITY JOB No. _____
JOB NO. 51118-61
DATE SEPTEMBER 2024
DESIGNER TS
CHECKED ____ DRAWN CE/JM
SHEET 16 OF 36

Date: Sep 24, 2024, 4:00pm User ID: tstephens
File: H:\Projects\51118-061_Phase 3\501 Construction Documents\Civil\0051118-61.dwg
THIS DOCUMENT HAS BEEN PRODUCED FROM MATERIAL THAT WAS STORED AND/OR TRANSMITTED ELECTRONICALLY AND MAY HAVE BEEN INADVERTENTLY ALTERED. RELY ONLY ON FINAL HARDCOPY MATERIALS BEARING THE CONSULTANT'S ORIGINAL SIGNATURE AND SEAL.

ATTACHMENT I

INSPECTIONS & MAINTENANCE

Designated and qualified person(s) shall inspect Pollution Control Measures weekly and within 24 hours after a storm event. An inspection report that summarizes the scope of the inspection, names and qualifications of personnel conducting the inspection, date of the inspection, major observations, and actions taken as a result of the inspection will be recorded and maintained as part of Storm Water TPDES data for a period of three years after the Notice of Termination (NOT) has been filed. A copy of the Inspection Report Form is provided in this Storm Water Pollution Prevention Plan.

As a minimum, the inspector shall observe: (1) significant disturbed areas for evidence of erosion, (2) storage areas for evidence of leakage from the exposed stored materials, (3) structural controls (rock berm outlets, silt fences, drainage swales, etc.) for evidence of failure or excess siltation (over 6 inches deep), (4) vehicle exit point for evidence of off-site sediment tracking, (5) vehicle storage areas for signs of leaking equipment or spills, (6) concrete truck rinse-out pit for signs of potential failure, (7) embankment, spillways, and outlet of sediment basin (where applicable) for erosion damage, and (8) sediment basins (where applicable) for evidence that basin has accumulated 50% of its volume in silt. Deficiencies noted during the inspection will be corrected and documented within seven calendar days following the inspection or before the next anticipated storm event if practicable. Temporary sediment basins and permanent basins will be inspected until final stabilization of 70% within the basin watershed is achieved.

BMP inspection and maintenance requirements from sections 1.3 and 1.4 of TCEQ's Technical Guidance Manual are detailed below.

Temporary Construction Entrance/Exit

- The entrance should be maintained in a condition, which will prevent tracking or flowing of sediment onto public rights-of-way. This may require periodic top dressing with additional stone as conditions demand and repair and/or cleanout of any measures used to trap sediment.

- All sediment spilled, dropped, washed or tracked onto public rights-of-way should be removed immediately by contractor.
- When necessary, wheels should be cleaned to remove sediment prior to entrance onto public right-of-way.
- When washing is required, it should be done on an area stabilized with crushed stone that drains into an approved sediment trap or sediment basin.
- All sediment should be prevented from entering any storm drain, ditch or water course by using approved methods.

Silt Fence

- Inspect all fencing weekly, and after any rainfall.
- Remove sediment when buildup reaches 6 inches.
- Replace any torn fabric or install a second line of fencing parallel to the torn section.
- Replace or repair any sections crushed or collapsed in the course of construction activity. If a section of fence is obstructing vehicular access, consider relocating it to a spot where it will provide equal protection, but will not obstruct vehicles. A triangular filter dike may be preferable to a silt fence at common vehicle access points.
- When construction is complete, the sediment should be disposed of in a manner that will not cause additional siltation and the prior location of the silt fence should be revegetated. The fence itself should be disposed of in an approved landfill.

Rock Berms

- Inspection should be made weekly and after each rainfall by the responsible party. For installations in streambeds, additional daily inspections should be made.
- Remove sediment and other debris when buildup reaches 6 inches and dispose of the accumulated silt in an approved manner that will not cause any additional siltation.
- Repair any loose wire sheathing.
- The berm should be reshaped as needed during inspection.

- The berm should be replaced when the structure ceases to function as intended due to silt accumulation among the rocks, washout, construction traffic damage, etc.
- The rock berm should be left in place until all upstream areas are stabilized and accumulated silt removed.

Inlet Protection

- Inspection should be made weekly and after each rainfall. Repair or replacement should be made promptly as needed by the contractor.
- Remove sediment when buildup reaches a depth of 3 inches. Removed sediment should be deposited in a suitable area and in such a manner that it will not erode.
- Check placement of device to prevent gaps between device and curb.
- Inspect filter fabric and patch or replace if torn or missing.
- Structures should be removed and the area stabilized only after the remaining drainage area has been properly stabilized.

Pollution Prevention Measure	Inspected in Compliance	Corrective Action Required	
		Description (use additional sheet if necessary)	Date Completed
Best Management Practices			
Natural vegetation buffer strips			
Temporary vegetation			
Permanent vegetation			
Sediment control basin			
Silt fences			
Rock berms			
Gravel filter bags			
Drain inlet protection			
Other structural controls			
Vehicle exits (off-site tracking)			
Material storage areas (leakage)			
Equipment areas (leaks, spills)			
Concrete washout pit (leaks, failure)			
General site cleanliness			
Trash receptacles			
Evidence of Erosion			
Site preparation			
Roadway or parking lot construction			
Utility construction			
Drainage construction			
Building construction			
Major Observations			
Sediment discharges from site			
BMPs requiring maintenance			
BMPs requiring modification			
Additional BMPs required			

_____ A brief statement describing the qualifications of the inspector is included in this SWP3.

"I certify under penalty of law that this document and all attachments were prepared under my direction or supervision in accordance with a system designed to assure that qualified personnel properly gather and evaluate the information submitted. Based on my inquiry of the person or persons who manage the system, or those persons directly responsible for gathering the information, the information submitted is, to the best of my knowledge and belief, true, accurate, and complete. I am aware there are significant penalties for submitting false information, including the possibility of fine and imprisonment for knowing violations."

"I further certify I am an authorized signatory in accordance with the provisions of 30 TAC §305.128."

_____ _____ _____

Inspector's Name Inspector's Signature Date

PROJECT MILESTONE DATES

Date when major site grading activities begin:

Construction Activity	*Date*
Installation of BMPs	

Dates when construction activities temporarily or permanently cease on all or a portion of the project:

Construction Activity	Date

Dates when stabilization measures are initiated:

Stabilization Activity	Date
Removal of BMPs	

ATTACHMENT J

SCHEDULE OF INTERIM AND PERMANENT SOIL STABILIZATION PRACTICES

Interim on-site stabilization measures, which are continuous, will include minimizing soil disturbances by exposing the smallest practical area of land required for the shortest period of time and maximizing use of natural vegetation. As soon as practical, all disturbed soil will be stabilized via permanent revegetation. Details, such as installation, irrigation, and maintenance are provided below.

Installation:

- Final grading must be completed prior to seeding, minimizing all steep slopes. In addition, all necessary erosion structures such as dikes, swales, diversions, should also be installed.
- Seedbed should be well pulverized, loose, and uniform.
- Fertilizer should be applied at the rate of 40 pounds of nitrogen and 40 pounds of phosphorus per acre, which is equivalent to about 1.0 pounds of nitrogen and phosphorus per 1000 square feet. Compost can be used instead of fertilizer and applied at the same time as the seed.

Irrigation:

- Temporary irrigation should be provided according to the schedule described below, or to replace moisture loss to evapotranspiration (ET), whichever is greater. Significant rainfall (on-site rainfall of ½" or greater) may allow watering to be postponed until the next scheduled irrigation.

Time Period	Irrigation Amount and Frequency
Within 2 hours of installation	Irrigate entire root depth, or to germinate seed
During the next 10 business days	Irrigate entire root depth every Monday, Wednesday, and Friday
During the next 30 business days or until Substantial Completion	Irrigate entire root depth a minimum of once per week, or as necessary to ensure vigorous growth
During the next 4 months or until Final Acceptance of the Project	Irrigate entire root depth once every two weeks, or as necessary to ensure vigorous growth

Inspection and Maintenance Guidelines:

- Permanent vegetation should be inspected weekly and after each rain event to locate and

repair any erosion.

- Erosion from storms or other damage should be repaired as soon as practical by regrading the area and applying new seed.
- If the vegetated cover is less than 80%, the area should be reseeded.

Stabilization measures will be initiated as soon as practicable in portions of the site where construction activities have temporarily or permanently ceased, and except as provided below, will be initiated no more than fourteen (14) days after the construction activity in that portion of the site has temporarily or permanently ceased. Where construction activity on a portion of the site is temporarily ceased, and earth disturbing activities will be resumed within twenty-one (21) days, temporary stabilization measures do not have to be initiated on that portion of site. In areas experiencing droughts where the initiation of stabilization measures by the 14th day after construction activity has temporarily or permanently ceased is precluded by seasonably arid conditions, stabilization measures must be initiated as soon as practicable.

AGENT AUTHORIZATION

Owner Authorization Form

for Required Signature for submitting and signing an application for an Edwards Aquifer Protection Plan (Plan) and conducting regulated activities in accordance with an approved Plan.

Texas Commission on Environmental Quality
Edwards Aquifer Protection Program
Relating to the Edwards Aquifer Rules of
Title 30 of the Texas Administrative Code
(30 TAC), Chapter 213
Effective June 1, 1999

Land Owner Authorization

I, Nathan Holt of KL LHB3 AIV LLC

Land Owner Name (Individual) | Firm (applicable to Legal Entities)

am the Owner of Record or Title Holder of the property located at:

Northwest of the intersection of CR 237 and CR 238 near Jarrell TX, 76537

(Legal description of the property referenced in the application)

and being duly authorized under 30 TAC § 213.4(c)(2) and § 213.4(d)(1) or § 213.23(c)(2) and § 213.23(d) to submit and sign an application for a Plan, do hereby authorize:

Lennar Homes of Texas Land and Construction, Ltd.

(Applicant Name / Plan Holder (Legal Entity or Individual))

to conduct:

construction of a residential subdivision including grading, streets, homes, utilities, VFS, and water quality ponds

(Description of the proposed regulated activities)

on the property described above or at:

Northwest of the intersection of CR 237 and CR 238 near Jarrell TX, 76537

(If applicable to a precise location for the authorized regulated activities)

Land Owner Acknowledgement

I, Nathan Holt of KL LHB3 AIV LLC

Land Owner Name (Individual) | Firm (applicable to Legal Entities)

understand that while Lennar Homes of Texas Land and Construction, Ltd.

Applicant Name / Plan Holder (Legal Entity or Individual)

is responsible for compliance with the approved or conditionally approved Plan and any special conditions of the approved Plan through all phases of Plan implementation,

I, Nathan Holt of KL LHB3 AIV LLC
Land Owner Name (Individual) Firm (applicable to Legal Entities)

as Owner of Record or Title Holder of the property described above, I am ultimately responsible for ensuring that compliance with the approved or conditionally approved Plan and any special conditions of the approved Plan, through all phases of Plan implementation, is achieved even if the responsibility for compliance and the right to possess and control of the property referenced in the application has been contractually assumed by another legal entity.

I, Nathan Holt of KL LHB3 AIV LLC
Land Owner Name (Individual) Firm (applicable to Legal Entities)

further understand that any failure to comply with any condition of the Executive Director's approval is a violation and is subject to administrative rule or orders and penalties as provided under 30 TAC § 213.10 (relating to Enforcement). Such violation may also be subject to civil penalties and injunction.

Land Owner Signature

Nathan Holt
Land Owner Signature

October 2, 2024
Date

THE STATE OF § ARIZONA

County of § Maricopa

BEFORE ME, the undersigned authority, on this day personally appeared known to me to be the person whose name is subscribed to the foregoing instrument and acknowledged to me that (s)he executed same for the purpose and consideration therein expressed.

GIVEN under my hand and seal of office on this 2nd day of October, 2024

Julie Gillett
NOTARY PUBLIC

JULIE GILLETT
Notary Public - State of Arizona
MARICOPA COUNTY
Commission # 635441
Expires August 05, 2026

Julie Gillett
Typed or Printed Name of Notary

MY COMMISSION EXPIRES: 08/05/2026

Attached: (Mark all that apply)

- ☐ Lease Agreement
- ☐ Signed Contract
- ☐ Deed Recorded Easement
- ☐ Other legally binding document

Applicant Acknowledgement

I, Ally Beard of Lennar Homes of Texas Land and Construction, Ltd.
Applicant Name (Individual) Firm (applicable to Legal Entities)

acknowledge that KL LHB3 AIV LLC
Land Owner Name (Legal Entity or Individual)

has provided Lennar Homes of Texas Land and Construction, Ltd.
Applicant Name (Legal Entity or Individual)

with the right to possess and control the property referenced in the Edwards Aquifer Protection Plan (Plan).

I understand that Lennar Homes of Texas Land and Construction, Ltd.
Applicant Name (Legal Entity or Individual)

is responsible, contractually or not, for compliance with the approved or conditionally approved Plan and any special conditions of the approved Plan through all phases of Plan implementation. I further understand that failure to comply with any condition of the Executive Director's approval is a violation and is subject to administrative rule or orders and penalties as provided under § 213.10 (relating to Enforcement). Such violation may also be subject to civil penalties and injunction.

Applicant Signature

Applicant Signature

10/2/2024
Date

THE STATE OF § Texas

County of § Travis

BEFORE ME, the undersigned authority, on this day personally appeared known to me to be the person whose name is subscribed to the foregoing instrument and acknowledged to me that (s)he executed same for the purpose and consideration therein expressed.

GIVEN under my hand and seal of office on this 2nd day of October 2024

NOTARY PUBLIC

MATTHEW PEACE WALLS
Notary Public, State of Texas
Comm. Expires 10-22-2027
Notary ID 132220835

Matthew Peace Walls
Typed or Printed Name of Notary

MY COMMISSION EXPIRES: 10-22-2027

Agent Authorization Form
For Required Signature
Edwards Aquifer Protection Program
Relating to 30 TAC Chapter 213
Effective June 1, 1999

I Ally Beard,
Print Name

Land Manager,
Title - Owner/President/Other

of Lennar Homes of Texas Land and Construction, Ltd.,
Corporation/Partnership/Entity Name

have authorized Jennifer Franklin, P.E.
Print Name of Agent/Engineer

of Pape-Dawson Consulting Engineers, LLC
Print Name of Firm

to represent and act on the behalf of the above named Corporation, Partnership, or Entity for the purpose of preparing and submitting this plan application to the Texas Commission on Environmental Quality (TCEQ) for the review and approval consideration of regulated activities.

I also understand that:

1. The applicant is responsible for compliance with 30 Texas Administrative Code Chapter 213 and any condition of the TCEQ's approval letter. The TCEQ is authorized to assess administrative penalties of up to $10,000 per day per violation.

2. For those submitting an application who are not the property owner, but who have the right to control and possess the property, additional authorization is required from the owner.

3. Application fees are due and payable at the time the application is submitted. The application fee must be sent to the TCEQ cashier or to the appropriate regional office. The application will not be considered until the correct fee is received by the commission.

4. A notarized copy of the Agent Authorization Form must be provided for the person preparing the application, and this form must accompany the completed application.

5. No person shall commence any regulated activity on the Edwards Aquifer Recharge Zone, Contributing Zone or Transition Zone until the appropriate application for the activity has been filed with and approved by the Executive Director.

SIGNATURE PAGE:

Applicant's Signature

10/2/2024
Date

THE STATE OF Texas §

County of Travis §

BEFORE ME, the undersigned authority, on this day personally appeared Ally Benoit known to me to be the person whose name is subscribed to the foregoing instrument, and acknowledged to me that (s)he executed same for the purpose and consideration therein expressed.

GIVEN under my hand and seal of office on this 2nd day of October 2024.

MATTHEW PEACE WALLS
Notary Public, State of Texas
Comm. Expires 10-22-2027
Notary ID 132220835

Matthew Peace Walls
NOTARY PUBLIC

Matthew Peace Walls
Typed or Printed Name of Notary

MY COMMISSION EXPIRES: 10-22-2027

APPLICATION FEE FORM

Application Fee Form

Texas Commission on Environmental Quality

Name of Proposed Regulated Entity: Rancho Del Cielo Phase 4B
Regulated Entity Location: Northwest of the intersection of CR 237 & CR 238, Jarrell, Texas
Name of Customer: Lennar Homes of Texas Land and Construction, Ltd.
Contact Person: Ally Benoit Phone: 469-583-9989
Customer Reference Number (if issued):CN 602412207
Regulated Entity Reference Number (if issued):RN _____

Austin Regional Office (3373)

☐ Hays ☐ Travis ☒ Williamson

San Antonio Regional Office (3362)

☐ Bexar ☐ Medina ☐ Uvalde
☐ Comal ☐ Kinney

Application fees must be paid by check, certified check, or money order, payable to the **Texas Commission on Environmental Quality**. Your canceled check will serve as your receipt. **This form must be submitted with your fee payment**. This payment is being submitted to:

☒ Austin Regional Office
☐ Mailed to: TCEQ - Cashier
Revenues Section
Mail Code 214
P.O. Box 13088
Austin, TX 78711-3088

☐ San Antonio Regional Office
☐ Overnight Delivery to: TCEQ - Cashier
12100 Park 35 Circle
Building A, 3rd Floor
Austin, TX 78753
(512)239-0357

Site Location (Check All That Apply):

☒ Recharge Zone ☐ Contributing Zone ☐ Transition Zone

Type of Plan	*Size*	*Fee Due*
Water Pollution Abatement Plan, Contributing Zone Plan: One Single Family Residential Dwelling	Acres	$
Water Pollution Abatement Plan, Contributing Zone Plan: Multiple Single Family Residential and Parks	Acres	$
Water Pollution Abatement Plan, Contributing Zone Plan: Non-residential	Acres	$
Sewage Collection System	1710 L.F.	$ 855.00
Lift Stations without sewer lines	Acres	$
Underground or Aboveground Storage Tank Facility	Tanks	$
Piping System(s)(only)	Each	$
Exception	Each	$
Extension of Time	Each	$

Signature: _____ Date: 10/9/24

Application Fee Schedule

Texas Commission on Environmental Quality
Edwards Aquifer Protection Program 30 TAC Chapter 213 (effective 05/01/2008)

Water Pollution Abatement Plans and Modifications

Contributing Zone Plans and Modifications

Project	*Project Area in Acres*	*Fee*
One Single Family Residential Dwelling	< 5	$650
Multiple Single Family Residential and Parks	< 5 5 < 10 10 < 40 40 < 100 100 < 500 ≥ 500	$1,500 $3,000 $4,000 $6,500 $8,000 $10,000
Non-residential (Commercial, industrial, institutional, multi-family residential, schools, and other sites where regulated activities will occur)	< 1 1 < 5 5 < 10 10 < 40 40 < 100 ≥ 100	$3,000 $4,000 $5,000 $6,500 $8,000 $10,000

Organized Sewage Collection Systems and Modifications

Project	*Cost per Linear Foot*	*Minimum Fee-Maximum Fee*
Sewage Collection Systems	$0.50	$650 - $6,500

Underground and Aboveground Storage Tank System Facility Plans and Modifications

Project	*Cost per Tank or Piping System*	*Minimum Fee-Maximum Fee*
Underground and Aboveground Storage Tank Facility	$650	$650 - $6,500

Exception Requests

Project	*Fee*
Exception Request	$500

Extension of Time Requests

Project	*Fee*
Extension of Time Request	$150

CORE DATA FORM

TCEQ Core Data Form

TCEQ Use Only

For detailed instructions regarding completion of this form, please read the Core Data Form Instructions or call 512-239-5175.

SECTION I: General Information

1. Reason for Submission (*If other is checked please describe in space provided.*)

☒ New Permit, Registration or Authorization (*Core Data Form should be submitted with the program application.*)

☐ Renewal (*Core Data Form should be submitted with the renewal form*) ☐ Other

2. Customer Reference Number *(if issued)*	Follow this link to search for CN or RN numbers in Central Registry**	3. Regulated Entity Reference Number *(if issued)*
CN 602412207		RN 11118847

SECTION II: Customer Information

4. General Customer Information	5. Effective Date for Customer Information Updates (mm/dd/yyyy)	4/20/2022

☒ New Customer ☐ Update to Customer Information ☐ Change in Regulated Entity Ownership

☐ Change in Legal Name (Verifiable with the Texas Secretary of State or Texas Comptroller of Public Accounts)

The Customer Name submitted here may be updated automatically based on what is current and active with the Texas Secretary of State (SOS) or Texas Comptroller of Public Accounts (CPA).

6. Customer Legal Name *(If an individual, print last name first: eg: Doe, John)*	*If new Customer, enter previous Customer below:*
Lennar Homes of Texas Land and Construction, Ltd.	

7. TX SOS/CPA Filing Number	8. TX State Tax ID (11 digits)	9. Federal Tax ID (9 digits)	10. DUNS Number *(if applicable)*
11452910	17527920189	753792018	

11. Type of Customer: ☒ Corporation ☐ Individual Partnership: ☐ General ☐ Limited

Government: ☐ City ☐ County ☐ Federal ☐ State ☐ Other ☐ Sole Proprietorship ☐ Other:

12. Number of Employees
☐ 0-20 ☒ 21-100 ☐ 101-250 ☐ 251-500 ☐ 501 and higher

13. Independently Owned and Operated?
☐ Yes ☒ No

14. Customer Role (Proposed or Actual) – *as it relates to the Regulated Entity listed on this form. Please check one of the following*

☒ Owner ☐ Operator ☐ Owner & Operator
☐ Occupational Licensee ☐ Responsible Party ☐ Voluntary Cleanup Applicant ☐ Other:

15. Mailing Address:							
	13620 N FM 620						
	Bldg. B, Suite 150						
	City	Austin	State	TX	ZIP	78717	ZIP + 4

16. Country Mailing Information *(if outside USA)*	17. E-Mail Address *(if applicable)*
	Ally.Benoit@Lennar.com

18. Telephone Number	19. Extension or Code	20. Fax Number *(if applicable)*
(469) 583-9989		( ) -

SECTION III: Regulated Entity Information

21. General Regulated Entity Information (*If 'New Regulated Entity" is selected below this form should be accompanied by a permit application*)

☒ New Regulated Entity ☐ Update to Regulated Entity Name ☐ Update to Regulated Entity Information

The Regulated Entity Name submitted may be updated in order to meet TCEQ Agency Data Standards (removal of organizational endings such as Inc, LP, or LLC).

22. Regulated Entity Name (*Enter name of the site where the regulated action is taking place.*)

Rancho Del Cielo Phase 4B

23. Street Address of the Regulated Entity: *(No PO Boxes)*							
	City		State		ZIP		ZIP + 4	
24. County	Williamson						

Enter Physical Location Description if no street address is provided.

25. Description to Physical Location:	Northwest of the intersection of CR 237 & CR 238				
26. Nearest City			State	Nearest ZIP Code	
Jarrell			TX	76537	
27. Latitude (N) In Decimal:	30.784551		28. Longitude (W) In Decimal:	-97.644065	
Degrees	Minutes	Seconds	Degrees	Minutes	Seconds
30	47	4.4	-97	38	38.6

29. Primary SIC Code (4 digits)	30. Secondary SIC Code (4 digits)	31. Primary NAICS Code (5 or 6 digits)	32. Secondary NAICS Code (5 or 6 digits)
1521		236115	

33. What is the Primary Business of this entity? *(Do not repeat the SIC or NAICS description.)*

Single-family residential subdivision

34. Mailing Address:	13620 N FM 620						
	Bldg. B, Suite 150						
	City	Austin	State	TX	ZIP	78717	ZIP + 4	
35. E-Mail Address:	Ally.Benoit@Lennar.com						

36. Telephone Number	37. Extension or Code	38. Fax Number *(if applicable)*
(469) 583-9989		( ) -

39. TCEQ Programs and ID Numbers Check all Programs and write in the permits/registration numbers that will be affected by the updates submitted on this form. See the Core Data Form instructions for additional guidance.

☐ Dam Safety	☐ Districts	☒ Edwards Aquifer	☐ Emissions Inventory Air	☐ Industrial Hazardous Waste
☐ Municipal Solid Waste	☐ New Source Review Air	☐ OSSF	☐ Petroleum Storage Tank	☐ PWS
☐ Sludge	☐ Storm Water	☐ Title V Air	☐ Tires	☐ Used Oil
☐ Voluntary Cleanup	☐ Waste Water	☐ Wastewater Agriculture	☐ Water Rights	☐ Other:

SECTION IV: Preparer Information

40. Name:	Tabatha Farr, EIT	41. Title:	Engineer III

42. Telephone Number	43. Ext./Code	44. Fax Number	45. E-Mail Address
(512) 454-8711		( ) -	tfarr@pape-dawson.com

SECTION V: Authorized Signature

46. By my signature below, I certify, to the best of my knowledge, that the information provided in this form is true and complete, and that I have signature authority to submit this form on behalf of the entity specified in Section II, Field 6 and/or as required for the updates to the ID numbers identified in field 39.

Company:	Pape-Dawson Consulting Engineers, LLC	Job Title:	~~Associate~~ SR. Vice President
Name *(In Print)*:	Michael Fisher, P.E.	Phone:	(512) 454-8711
Signature:		Date:	10/9/24

CONSTRUCTION PLANS

REVISIONS		RANCHO DEL CIELO MUD	CITY OF JARRELL	WILLIAMSON COUNTY
NO.	SHEET(S) DESCRIPTION DATE	APPROVED BY/DATE	APPROVED BY/DATE	APPROVED BY/DATE

RANCHO DEL CIELO

PHASE 4B

STREET, DRAINAGE, WATER & WASTEWATER IMPROVEMENTS
RANCHO DEL CIELO MUNICIPAL UTILITY DISTRICT
WILLIAMSON COUNTY

WILLIAMSON COUNTY, TEXAS

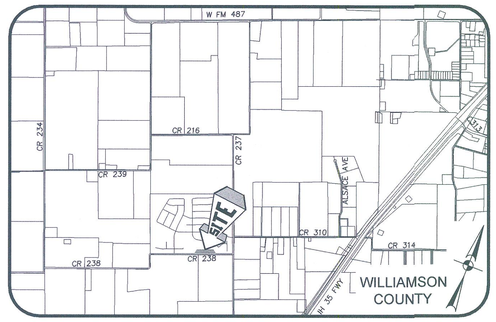

VICINITY MAP
N.T.S.

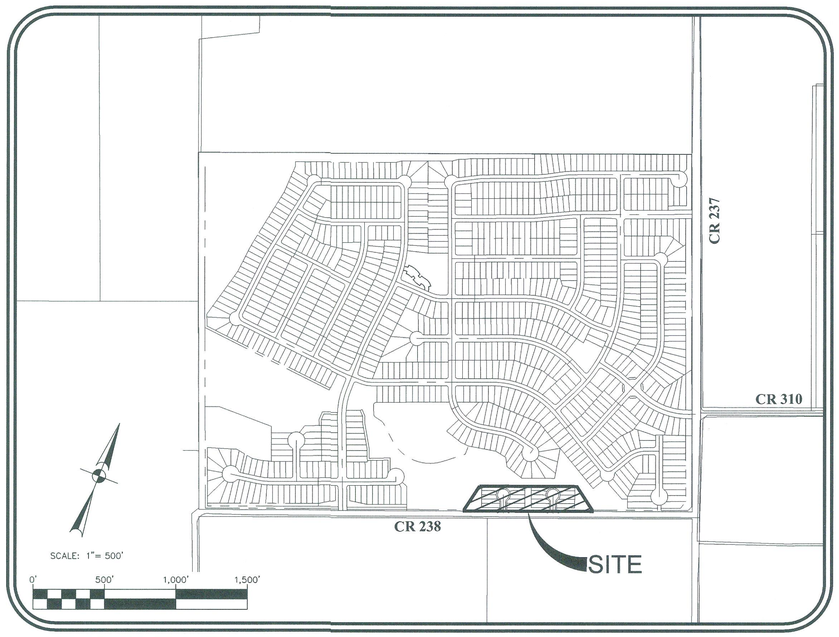

THE LOCATIONS OF EXISTING UNDERGROUND UTILITIES ARE SHOWN IN AN APPROXIMATE WAY ONLY AND HAVE NOT BEEN INDEPENDENTLY VERIFIED BY THE OWNER OR ITS REPRESENTATIVE. THE CONTRACTOR SHALL DETERMINE THE EXACT LOCATION OF ALL EXISTING UTILITIES BEFORE COMMENCING WORK, AND AGREES TO BE FULLY RESPONSIBLE FOR ANY AND ALL DAMAGES WHICH MIGHT BE ASSOCIATED BY THE CONTRACTOR'S FAILURE TO EXACTLY LOCATE AND PRESERVE ANY AND ALL UNDERGROUND UTILITIES.

THE CONTRACTOR SHALL OBTAIN A "NOTICE OF PROPOSED INSTALLATION OF UTILITY LINE" PERMIT FROM WILLIAMSON COUNTY FOR ANY WORK PERFORMED IN THE EXISTING COUNTY RIGHT-OF-WAY (DRIVEWAY APRON, WATER MAIN TIE-IN, ETC.) THIS PERMIT APPLICATION WILL REQUIRE A LIABILITY AGREEMENT, A CONSTRUCTION COST ESTIMATE FOR WORK WITHIN THE RIGHT-OF-WAY INCLUDING PAVEMENT REPAIR (IF NEEDED), A PERFORMANCE BOND, CONSTRUCTION PLANS AND, IF NECESSARY, A TRAFFIC CONTROL PLAN. AN INSPECTION FEE, AND A PRE-CONSTRUCTION MEETING MAY ALSO BE REQUIRED, DEPENDING ON THE SCOPE OF WORK. THE PERMIT WILL BE REVIEWED AND APPROVED BY THE COUNTY ENGINEER, AND MUST ALSO BE APPROVED BY THE WILLIAMSON COUNTY COMMISSIONERS COURT IF ANY ROAD CLOSURE IS INVOLVED.

A PORTION OF THE PROPOSED IMPROVEMENTS ARE WITHIN THE 1% ANNUAL CHANCE FLOODPLAIN PER FEDERAL FLOOD INSURANCE ADMINISTRATION FIRM COMMUNITY PANEL NO(s). 48491C0125F, DATED DECEMBER 20, 2019, WILLIAMSON COUNTY, TEXAS.

ENGINEER:
PAPE-DAWSON ENGINEERS
10801 N MOPAC EXPY, BLDG 3, STE 200
AUSTIN, TEXAS 78757
PHONE (512) 454-8711

SURVEYOR:
PAPE-DAWSON ENGINEERS
10801 N MOPAC EXPY, BLDG 3, STE 200
AUSTIN, TEXAS 78757
PHONE (512) 454-8711

OWNER / SUBDIVIDER:
LENNAR HOMES OF TEXAS LAND & CONSTRUCTION, LTD.
13620 N FM 620, BUILDING B, SUITE 150
AUSTIN, TEXAS 78717

Sheet List Table	
Sheet Number	Sheet Title
1	COVER SHEET
2	PRELIMINARY PLAT 1 OF 3
3	PRELIMINARY PLAT 2 OF 3
4	PRELIMINARY PLAT 3 OF 3
5	CONSTRUCTION NOTES 1 OF 3
6	CONSTRUCTION NOTES 2 OF 3
7	CONSTRUCTION NOTES 3 OF 3
8	RANCHO DEL CIELO MUD EASEMENT & PROPERTY REVIEW 1 OF 2
9	RANCHO DEL CIELO MUD EASEMENT & PROPERTY REVIEW 2 OF 2
10	EROSION & SEDIMENTATION CONTROL PLAN 1 OF 2
11	EROSION & SEDIMENTATION CONTROL PLAN 2 OF 2
12	SIGNAGE, STRIPING AND TRAFFIC CONTROL PLAN
13	STREET PLAN AND PROFILE
14	OVERALL DRAINAGE STUDY
15	DRAINAGE AREA MAP
16	DRAINAGE AREA CALCULATIONS
17	OVERALL STORM DRAIN PLAN
18	CHANNEL A - PLAN AND PROFILE
19	WATER QUALITY TREATMENT SUMMARY - PHASE 5 - 1 OF 2
20	WATER QUALITY TREATMENT SUMMARY - PHASE 5 - 2 OF 2
21	OVERALL GRADING PLAN
22	OVERALL WATER PLAN
23	OVERALL WASTEWATER PLAN 1 OF 2
24	OVERALL WASTEWATER PLAN 2 OF 2
25	WASTEWATER PLAN & PROFILE WW-O & WW-P
26	EROSION & SEDIMENTATION CONTROL DETAILS
27	STREET DETAILS 1 OF 3
28	STREET DETAILS 2 OF 3
29	STREET DETAILS 3 OF 3
30	DRAINAGE DETAILS 1 OF 3
31	DRAINAGE DETAILS 2 OF 3
32	DRAINAGE DETAILS 3 OF 3
33	WATER DETAILS 1 OF 2
34	WATER DETAILS 2 OF 2
35	WASTEWATER DETAILS 1 OF 2
36	WASTEWATER DETAILS 2 OF 2

REVIEWED BY:

ACCEPTED FOR CONSTRUCTION:

RANCHO DEL CIELO MUNICIPAL UTILITY DISTRICT DATE
DISTRICT ENGINEER

CITY OF JARRELL DATE
CITY ENGINEER

REVIEW OF THE PLANS BY THE DISTRICT IS LIMITED TO WATER, WASTEWATER, AND DRAINAGE FACILITIES, AND DOES NOT INDICATE A REVIEW OF THE ADEQUACY OF THE DESIGN OF FACILITIES. IN APPROVING THESE PLANS, THE DISTRICT MUST RELY ON THE ADEQUACY OF THE WORK OF THE DESIGN ENGINEER.

REVIEWED FOR COMPLIANCE WITH COUNTY REQUIREMENTS:

COUNTY ENGINEER, WILLIAMSON COUNTY

WILLIAMSON COUNTY EMERGENCY SERVICES DISTRICT NO. 5 DATE

ALL RESPONSIBILITY FOR THE ADEQUACY OF THESE PLANS REMAINS WITH THE ENGINEER WHO PREPARED THEM. IN ACCEPTING THESE PLANS, WILLIAMSON COUNTY AND RANCHO DEL CIELO M.U.D. MUST RELY UPON THE ADEQUACY OF THE WORK OF THE DESIGN ENGINEER.

PAPE-DAWSON ENGINEERS
AUSTIN | SAN ANTONIO | HOUSTON | FORT WORTH | DALLAS
10801 N MOPAC EXPY, BLDG 3, STE 200 | AUSTIN, TX 78759 | 512.454.8711
TBPE FIRM REGISTRATION #470 | TBPLS FIRM REGISTRATION #10028801

SUBMITTED BY:

STATE OF TEXAS
JENNIFER C. FRANKLIN
118838
LICENSED
PROFESSIONAL ENGINEER

9-25-24

PAPE-DAWSON ENGINEERS DATE
JENNIFER C. FRANKLIN, P.E. #118838
ASSOCIATE VICE PRESIDENT

RANCHO DEL CIELO - PHASE 4B

51118-61

Date: Sep 24, 2024, 3:54pm User ID: tstephens
File: H:\Projects\51\18\60_Phase 4\301 Construction Documents\Civil\51511118-61.dwg

THIS DOCUMENT HAS BEEN PRODUCED FROM MATERIAL THAT WAS STORED AND/OR TRANSMITTED ELECTRONICALLY AND MAY HAVE BEEN INADVERTENTLY ALTERED. RELY ONLY ON FINAL HARDCOPY MATERIALS BEARING THE CONSULTANT'S ORIGINAL SIGNATURE AND SEAL.

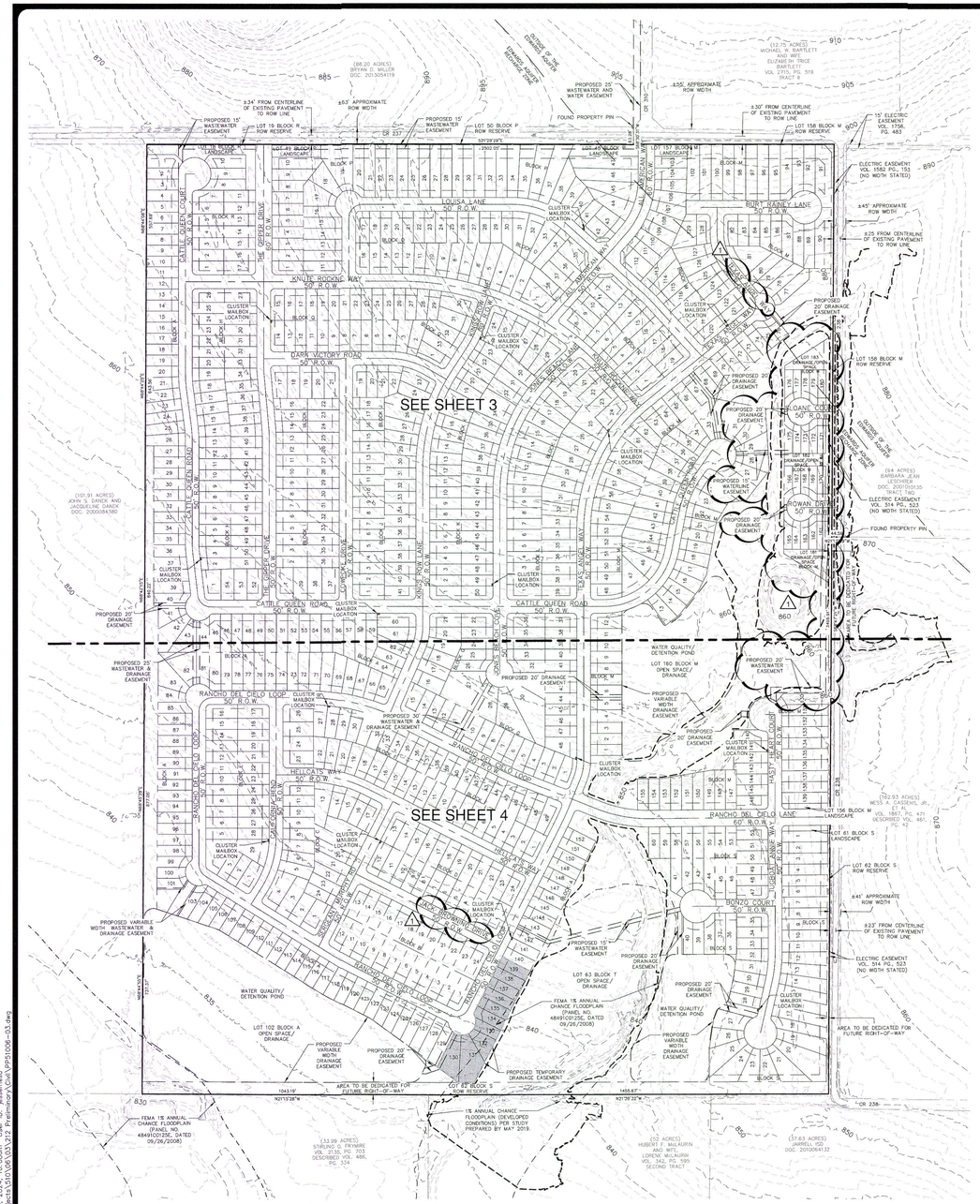

SCALE: 1"= 200'

0' 200' 400' 600'

LEGEND:

- FEMA FLOODPLAIN ZONE "A" DEFINED AS: AREAS SUBJECT TO THE 1% ANNUAL CHANCE FLOOD EVENT (PANEL NO. 48491C0125E, DATED 09/26/2008)
- 1% ANNUAL CHANCE FLOODPLAIN (DEVELOPED CONDITIONS) PER STUDY PREPARED BY PAPE-DAWSON ENGINEERS, INC., MAY 2019
- PROPOSED TEMPORARY DRAINAGE EASEMENT & AREA TO BE RECLAIMED FROM FEMA 1% ANNUAL CHANCE FLOODPLAIN
- EDWARDS AQUIFER BOUNDARY

NOTES:

1. THE OWNER UNDERSTANDS THAT IT IS THE RESPONSIBILITY OF THE OWNER, NOT THE CITY OR COUNTY TO ASSURE COMPLIANCE WITH THE PROVISIONS OF ALL APPLICABLE STATE, FEDERAL, AND LOCAL LAWS AND REGULATIONS RELATING TO THE ENVIRONMENT, INCLUDING, BUT NOT LIMITED TO THE ENDANGERED SPECIES ACT, STATE AQUIFER REGULATIONS, AND MUNICIPAL WATERSHED ORDINANCES.
2. A 10' WIDE PRIVATE UTILITY EASEMENT SHALL BE DEDICATED ADJACENT TO ALL STREET R.O.W. ON ALL LOTS.
3. PROPERTY OWNER SHALL PROVIDE FOR ACCESS TO DRAINAGE EASEMENTS AS MAY BE NECESSARY AND SHALL NOT PROHIBIT ACCESS BY REGULATORY AUTHORITIES.
4. ALL EASEMENTS ON PRIVATE PROPERTY SHALL BE MAINTAINED BY THE PROPERTY OWNER OR THEIR ASSIGNS.
5. PORTIONS OF THIS SUBDIVISION ARE LOCATED WITHIN THE RECHARGE ZONE OF THE EDWARDS AQUIFER.
6. MAINTENANCE OF THE DRAINAGE EASEMENTS SHALL BE THE RESPONSIBILITY OF THE PROPERTY OWNER.
7. THIS SUBDIVISION IS LOCATED WITHIN THE JURISDICTION OF WILLIAMSON COUNTY.
8. BUILDING SETBACK LINES SHALL BE IN ACCORDANCE WITH APPLICABLE OWNER RESTRICTIONS RECORDED IN COUNTY RECORDS AND WILLIAMSON COUNTY SUBDIVISION REGULATIONS OR APPLICABLE ORDINANCES BUT SHALL BE A MINIMUM OF 50 FEET FROM THE RIGHT-OF-WAY ALONG MAJOR ROADS AND 25 FEET FROM THE EDGE OF THE RIGHT-OF-WAY FROM ALL OTHER PUBLIC ROADS.
9. DRIVEWAY ACCESS TO LOTS WITHIN THIS SUBDIVISION FROM SIDE STREETS IS PROHIBITED.
10. DRIVEWAYS SHALL CONNECT ONLY TO AN INTERNAL PLATTED ROAD AND NOT TO CR 237, CR 238, OR FUTURE ARTERIAL ROADWAY.
11. NO STRUCTURE OR IMPROVEMENT ON ANY LOT IN THIS SUBDIVISION SHALL BE OCCUPIED UNTIL CONNECTED TO A WATER SUPPLY SYSTEM APPROVED BY THE TEXAS COMMISSION ON ENVIRONMENTAL QUALITY.
12. NO STRUCTURE OR IMPROVEMENT ON ANY LOT IN THIS SUBDIVISION SHALL BE OCCUPIED UNTIL CONNECTED TO A WASTEWATER COLLECTION SYSTEM APPROVED BY THE TEXAS COMMISSION ON ENVIRONMENTAL QUALITY.
13. THE OWNER OF THIS SUBDIVISION AND HIS HEIRS, SUCCESSORS AND ASSIGNS ASSUMES THE RESPONSIBILITY FOR PLANS FOR CONSTRUCTION OF ALL SUBDIVISION IMPROVEMENTS WHICH SHALL COMPLY WITH APPLICABLE CODES, RULES AND REGULATIONS AND REQUIREMENTS OF WILLIAMSON COUNTY, TEXAS AND THE TEXAS COMMISSION ON ENVIRONMENTAL QUALITY WHICH ARE IN EFFECT AND APPLICABLE AT THE TIME THE IMPROVEMENTS ARE DESIGNED AND CONSTRUCTED. THE OWNER UNDERSTANDS AND AGREES THAT PLAT VACATION AND REPLATTING MAY BE REQUIRED AT THE OWNERS SOLE EXPENSE IF PLANS TO CONSTRUCT THIS SUBDIVISION DO NOT COMPLY WITH SUCH CODES AND REQUIREMENTS.
14. WATER AND WASTEWATER SERVICE TO THIS SUBDIVISION WILL BE PROVIDED BY THE CITY OF JARRELL.
15. WATER AND WASTEWATER SYSTEMS SERVING THIS SUBDIVISION SHALL BE DESIGNED AND INSTALLED IN ACCORDANCE WITH THE DESIGN AND CONSTRUCTION STANDARDS OF THE TEXAS COMMISSION ON ENVIRONMENTAL QUALITY (TCEQ) OR WILLIAMSON COUNTY. PLANS AND SPECIFICATIONS SHALL BE SUBMITTED TO TCEQ AND OTHER AGENCIES AS APPROPRIATE AT THE TIME SUCH PLANS ARE PREPARED.
16. ALL STREETS ARE TO BE DEDICATED FOR PUBLIC USE.
17. THERE ARE NO CEMETERY SITES, EXISTING OR PROPOSED SCHOOL SITES OR OTHER PUBLIC SITES PROPOSED WITHIN THIS SUBDIVISION.
18. PUBLIC INFRASTRUCTURE ACCEPTANCE BY THE MUNICIPAL UTILITY DISTRICT FOR LOTS 130-139, BLOCK A WILL NOT BE ISSUED UNTIL THE FEMA FLOODPLAIN HAS BEEN REMOVED BY FEMA APPROVAL OF THE LOMR AND THE TEMPORARY DRAINAGE EASEMENT SHOWN HEREON HAS BEEN VACATED BY SEPARATE INSTRUMENT.
19. THE MINIMUM STREET CENTERLINE RADIUS SHALL BE 180 FEET FOR LOCAL STREETS AND (WITH THE EXCEPTION OF ALL AMERICAN WAY) 470 FEET FOR COLLECTOR STREETS. ALL AMERICAN WAY HAS BEEN PROVIDED WITH A MINIMUM STREET CENTERLINE RADIUS OF 300 FEET AND THE ASSOCIATED SPEED LIMIT REDUCED TO 30 MPH AT THIS ENTRANCE.
20. ALL LOTS SHALL BE A MINIMUM OF 30 FEET WIDE AS MEASURED 25 FEET FROM THE FRONT PROPERTY LINE.
21. CLUSTER MAILBOX LOCATIONS SHOWN ARE APPROXIMATE AND ARE SUBJECT TO CHANGE.
22. IF ANY SIDEWALKS ARE CONSTRUCTED IN THIS SUBDIVISION, THEY WILL BE MAINTAINED BY THE HOMEOWNER'S ASSOCIATION.
23. LOT 19, BLOCK R, LOT 50, BLOCK P, LOT 158, BLOCK M, AND LOT 62, BLOCK S ARE RESERVED FOR FUTURE RIGHT-OF-WAY DEDICATION, TO BE USED FOR THE FUTURE EXPANSION OF COUNTY ROADS 237 AND 238 AND THE FUTURE CONSTRUCTION OF AN ARTERIAL ALONG THE WESTERN RANCHO DEL CIELO PROPERTY BOUNDARY. DEDICATION OF THESE ROW RESERVE LOTS TO WILLIAMSON COUNTY WILL BE COMPLETED BY SEPARATE INSTRUMENT.

STREET NAME	CLASSIFICATION	PAVEMENT WIDTH (LOG-LOG)	DESIGN SPEED	LENGTH
ALL AMERICAN WAY	COLLECTOR	37 FT	30 MPH	463 LF
THE GIPPER DRIVE	COLLECTOR	37 FT	35 MPH	501 LF
RANCHO DEL CIELO LANE	COLLECTOR	37 FT	35 MPH	969 LF
ALL AMERICAN WAY	LOCAL	30 FT	25 MPH	779 LF
BONZO COURT	LOCAL	30 FT	25 MPH	302 LF
BURT RAINEY LANE	LOCAL	30 FT	25 MPH	380 LF
CALIFORNIA BEND	LOCAL	30 FT	25 MPH	773 LF
CATTLE QUEEN COURT	LOCAL	30 FT	25 MPH	426 LF
CATTLE QUEEN ROAD	LOCAL	30 FT	25 MPH	3428 LF
COWPOKE DRIVE	LOCAL	30 FT	25 MPH	903 LF
DARK VICTORY ROAD	LOCAL	30 FT	25 MPH	682 LF
THE GIPPER DRIVE	LOCAL	30 FT	25 MPH	1184 LF
HASTY HEART COURT	LOCAL	30 FT	25 MPH	410 LF
HELLCATS WAY	LOCAL	30 FT	25 MPH	1034 LF
JACK BROWNING DRIVE	LOCAL	30 FT	25 MPH	587 LF
JONES BEACH COVE	LOCAL	30 FT	25 MPH	245 LF
JONES BEACH LANE	LOCAL	30 FT	25 MPH	1040 LF
KINGS ROW LANE	LOCAL	30 FT	25 MPH	1601 LF
KNUTE ROCKNE WAY	LOCAL	30 FT	25 MPH	1800 LF
LOUISA LANE	LOCAL	30 FT	25 MPH	1756 LF
RANCHO DEL CIELO LOOP	LOCAL	30 FT	25 MPH	4030 LF
ROWAN DRIVE	LOCAL	30 FT	25 MPH	128 LF
SERGEANT MURPHY ROAD	LOCAL	30 FT	25 MPH	591 LF
SLOANE COURT	LOCAL	30 FT	25 MPH	128 LF
TEXAS ANGEL WAY	LOCAL	30 FT	25 MPH	2095 LF
TUGBOAT ANNIE WAY	LOCAL	30 FT	25 MPH	788 LF

NOTE: ALL STREETS ARE CLASSIFIED AS PUBLIC AND URBAN.

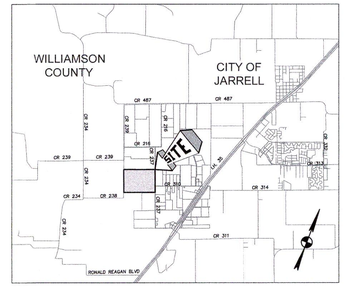

LOCATION MAP
NOT TO SCALE

LEGAL DESCRIPTION:

198.49 ACRES OUT OF THE
E. PARSONS SURVEY, ABSTRACT #494
WILLIAMSON COUNTY, TEXAS

OWNER / SUBDIVIDER:

LENNAR HOMES OF TEXAS LAND & CONSTRUCTION, LTD.
13620 N FM 620, BUILDING B, SUITE 150
AUSTIN, TEXAS 78717

ENGINEER:

PAPE-DAWSON CONSULTING ENGINEERS, LLC
10801 N. MOPAC EXPY
BUILDING 3, SUITE 200
AUSTIN, TEXAS 78759
PHONE: (512) 454-8711
FAX: (512) 459-8867
EMAIL: MFISHER@PAPE-DAWSON.COM

SURVEYOR:

PAPE-DAWSON CONSULTING ENGINEERS, LLC
10801 N. MOPAC EXPY
BUILDING 3, SUITE 200
AUSTIN, TEXAS 78759
PHONE: (512) 454-8711

LAND USE SUMMARY	NUMBER OF LOTS	ACRES
SINGLE FAMILY LOTS	961	122.47
RIGHT-OF-WAY	-	32.30
DRAINAGE/OPEN SPACE	6	39.14
ROW RESERVE	4	3.41
LANDSCAPE	10	1.17
COMMERCIAL	-	-
TOTAL	981	198.49

THIS DOCUMENT IS RELEASED FOR REVIEW PURPOSES ONLY UNDER THE AUTHORITY OF MICHAEL S. FISHER, P.E. 87704 ON MAY 24, 2024. IT IS NOT TO BE USED FOR BIDDING, CONSTRUCTION OR PERMITTING PURPOSES. 137.33(e)

NO.	REVISION	DATE
1	PHASE 5 LAYOUT UPDATED	07/26/24
2	PHASE 5 LAYOUT UPDATED	08/23/24

NO.	REVISION	DATE

PAPE-DAWSON ENGINEERS
AUSTIN | SAN ANTONIO | HOUSTON | FORT WORTH | DALLAS
10801 N. MOPAC EXPY, BLDG 3, STE 200 | AUSTIN, TX 78759 | 512.454.8711
TBPE FIRM REGISTRATION #470 | TBPLS FIRM REGISTRATION #10028801

RANCHO DEL CIELO
JARRELL, TEXAS
PRELIMINARY PLAT OVERALL - 1 OF 3

CITY NO. ____
JOB NO. 51006-03
DATE MAY 2019
DESIGNER EV
CHECKED JF DRAWN EV
SHEET 2 OF 8

PAPE-DAWSON ENGINEERS
AUSTIN | SAN ANTONIO | HOUSTON | FORT WORTH | DALLAS
10801 N. MOPAC EXPY, BLDG 3, STE 200 | AUSTIN, TX 78759 | 512.454.8711
TBPE FIRM REGISTRATION #470 | TBPLS FIRM REGISTRATION #10028801

RANCHO DEL CIELO - PHASE 4B
WILLIAMSON COUNTY, TEXAS
PRELIMINARY PLAT 1 OF 3

CITY JOB No. ____
JOB NO. 51118-61
DATE SEPTEMBER 2024
DESIGNER TS
CHECKED ____ DRAWN CE/JM
SHEET 2 OF 36

Date: Jul 26, 2024, 10:08am User ID: jessmesa
File: H:\Projects\51\06\03\02\Preliminary\Civil\PS\51006-03.dwg

Date: Sep 24, 2024, 3:54pm User ID: tstephens
File: H:\Projects\51\18\60_Phase 5\30\ Construction Documents\Civil\PS\51118-61.dwg

THIS DOCUMENT HAS BEEN PRODUCED FROM MATERIAL THAT WAS STORED AND/OR TRANSMITTED ELECTRONICALLY AND MAY HAVE BEEN INADVERTENTLY ALTERED. RELY ONLY ON FINAL HARDCOPY MATERIALS BEARING THE CONSULTANT'S ORIGINAL SIGNATURE AND SEAL.

THIS DOCUMENT HAS BEEN PRODUCED FROM MATERIAL THAT WAS STORED AND/OR TRANSMITTED ELECTRONICALLY AND MAY HAVE BEEN INADVERTENTLY ALTERED. RELY ONLY ON FINAL HARDCOPY MATERIALS BEARING THE CONSULTANT'S ORIGINAL SIGNATURE AND SEAL.

Date: Sep 24, 2024, 3:55pm User ID: tstephens
File: H:\Projects\511\18\60_Phase 5\301 Construction Documents\Civil\FP51118-61.dwg

Date: Jul 26, 2024, 10:09am User ID: jessemesa
File: H:\Projects\510\06\03\212 Preliminary\Civil\PP51006-03.dwg

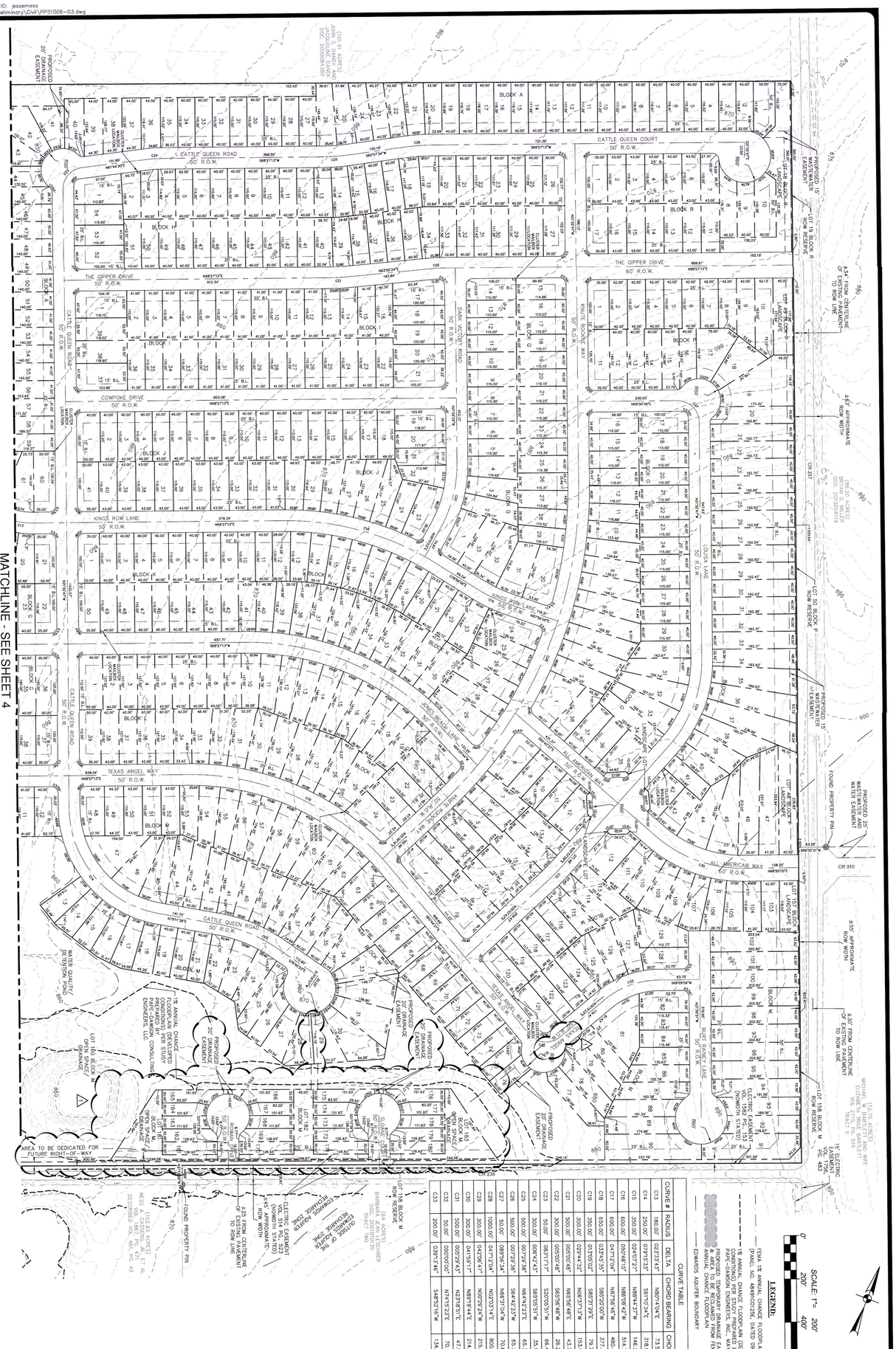

CURVE #	RADIUS	DELTA	CHORD BEARING	CHORD	LENGTH
C13	180.00'	022733"43"	N68°14'34"E	73.50'	74.00'
C14	250.00'	079°15'33"	S81°10'34"E	318.97'	345.83'
C15	300.00'	024°27'27"	N68°14'37"W	146.28'	147.37'
C16	600.00'	009°48'10"	N68°06'40"W	102.57'	102.69'
C17	600.00'	014°12'24"	N78°36'36"W	148.37'	148.77'
C18	550.00'	032°10'02"	S83°37'39"W	304.70'	308.88'
C19	350.00'	032°10'02"	S83°37'39"W	193.93'	196.50'
C20	300.00'	020°04'48"	N83°54'48"E	104.57'	105.13'
C21	300.00'	020°04'48"	N63°49'59"E	104.57'	105.13'
C22	300.00'	020°04'48"	N43°45'11"E	104.57'	105.13'
C23	300.00'	020°04'48"	N23°40'23"E	104.57'	105.13'
C24	300.00'	009°43'43"	S05°05'31"W	50.87'	50.93'
C25	300.00'	020°09'26"	S19°44'23"E	104.45'	105.50'
C26	300.00'	020°09'26"	S39°54'23"E	104.45'	105.50'
C27	50.00'	089°56'34"	N83°03'10"W	70.68'	78.49'
C28	1000.00'	047°12'04"	N02°01'14"E	800.71'	823.81'
C29	300.00'	042°06'47"	N00°29'22"W	215.57'	220.50'
C30	300.00'	041°53'37"	N89°19'44"E	214.96'	219.85'
C31	500.00'	000°29'43"	N23°18'29"E	4.32'	4.32'
C32	50.00'	090°00'00"	N74°15'23"E	70.71'	78.54'
C33	200.00'	039°51'46"	S48°52'16"W	134.28'	136.94'

LEGEND:
- EDWARDS AQUIFER BOUNDARY
- FEMA 1% ANNUAL CHANCE FLOODPLAIN (FLOODPLAIN (PANEL NO. 48491C0125E, DATED 09/26/2008)
- 1% ANNUAL CHANCE FLOODPLAIN (DEVELOPED CONDITIONS PER STUDY PREPARED BY PAPE-DAWSON ENGINEERS, LLC, DATED MAY 2019
- PROPOSED TEMPORARY DRAINAGE EASEMENT
- 1% ANNUAL CHANCE FLOODPLAIN FEMA 1%

THIS DOCUMENT IS RELEASED FOR INTERIM REVIEW PURPOSES, ONLY UNDER THE AUTHORITY OF MICHAEL S. FISHER, P.E. 87704 DATE: July 26, 2024 IT IS NOT TO BE USED FOR BIDDING, CONSTRUCTION OR PERMITTING PURPOSES, PER T.E.P.A. 137.33(e)

NO.	REVISION	DATE
1	PHASE 5 LAYOUT UPDATED	07/25/24

CITY JOB No. 51006-03
DATE MAY 2019
DESIGNER EV
CHECKED JF DRAWN EV
SHEET 3 OF 8

RANCHO DEL CIELO
JARRELL, TEXAS

PRELIMINARY PLAT - 2 OF 3

PAPE-DAWSON ENGINEERS
AUSTIN | SAN ANTONIO | HOUSTON | FORT WORTH | DALLAS
10801 N MOPAC EXPY, BLDG 3, STE 200 | AUSTIN, TX 78759 | 512.454.8711
TBPE FIRM REGISTRATION #470 | TBPLS FIRM REGISTRATION #10028801

THIS DOCUMENT WAS EITHER PRODUCED FOR REVIEW, MAY NOT BE COMPLETE, AND/OR MODIFIED ELECTRONICALLY AND MAY HAVE BEEN INCIDENTALLY ALTERED. BUT ONLY ON FINAL HARDCOPY BEARING THE CONSULTANT'S ORIGINAL SIGNATURE AND SEAL.

CITY JOB No. 51118-61
DATE SEPTEMBER 2024
DESIGNER TS
CHECKED DRAWN CS/JM
SHEET 3 OF 36

RANCHO DEL CIELO - PHASE 4B
WILLIAMSON COUNTY, TEXAS

PRELIMINARY PLAT 2 OF 3

PAPE-DAWSON ENGINEERS
AUSTIN | SAN ANTONIO | HOUSTON | FORT WORTH | DALLAS
10801 N MOPAC EXPY, BLDG 3, STE 200 | AUSTIN, TX 78759 | 512.454.8711
TBPE FIRM REGISTRATION #470 | TBPLS FIRM REGISTRATION #10028801

NO.	REVISION	DATE

Date: Sep 24, 2024, 3:55pm User ID: tstephens
File: H:\Projects\511\18\60_Phase 5\301 Construction Documents\Civil\FP51118-61.dwg

Date: Jul 26, 2024, 10:09am User ID: jessemeso
File: H:\Projects\510\06\03\212 Preliminary\Civil\FP51006-03.dwg

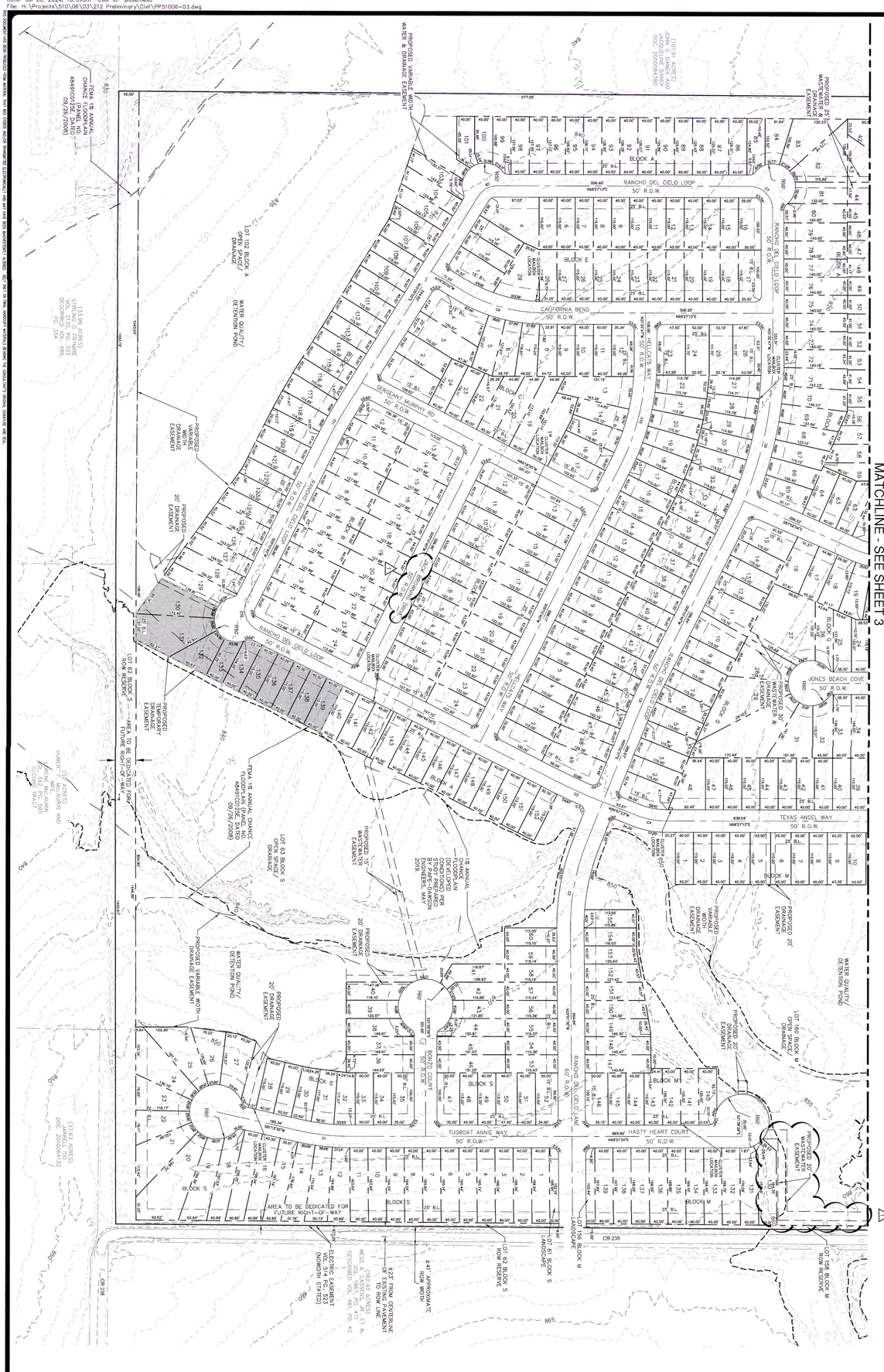

CURVE TABLE					
CURVE #	RADIUS	DELTA	CHORD BEARING	CHORD	LENGTH
C1	500.00'	012°51'55"	N74°47'32"E	112.04'	112.27'
C2	500.00'	022°04'07"	S10°59'27"E	191.40'	192.56'
C3	10000.00'	000°38'03"	S87°23'22"E	89.58'	89.61'
C4	180.00'	027°35'24"	N79°14'55"E	67.43'	67.83'
C5	10000.00'	000°38'03"	S02°36'38"W	89.58'	89.61'
C6	800.00'	026°43'27"	N08°11'04"W	369.77'	373.14'

CURVE TABLE					
CURVE #	RADIUS	DELTA	CHORD BEARING	CHORD	LENGTH
C7	50.00'	090°00'00"	N66°32'47"W	70.71'	78.54'
C8	50.00'	059°02'13"	S39°26'06"W	46.51'	50.63'
C9	350.00'	031°57'47"	N84°26'06"E	192.73'	195.25'
C10	500.00'	026°43'27"	N08°11'04"W	231.10'	233.21'
C11	10000.00'	000°38'03"	S02°47'20"W	91.40'	91.44'
C12	50.00'	090°00'00"	S39°49'29"E	70.71'	78.54'

LEGEND:

- FEMA TE ANNUAL CHANCE FLOODPLAIN
- TE ANNUAL CHANCE FLOODPLAIN (DEVELOPED CONDITION) PER STUDY PREPARED BY BLUEPRINT ENGINEERING, DATED 2015
- PROPOSED TEMPORARY DRAINAGE EASEMENT & AREA TO BE RECLAIMED FROM FEMA TE ANNUAL CHANCE FLOODPLAIN
- EDWARDS AQUIFER BOUNDARY

SHEET	4	OF	8

CITY NO.
JOB NO. 51006-03
DATE MAY 2019
DESIGNER EV
CHECKED JF DRAWN CV

RANCHO DEL CIELO
JARRELL, TEXAS

PRELIMINARY PLAT - 3 OF 3

PAPE-DAWSON ENGINEERS

AUSTIN | SAN ANTONIO | HOUSTON | FORT WORTH | DALLAS
10801 N MOPAC EXPY, BLDG 3, STE 200 | AUSTIN, TX 78759 | 512.454.8711
TBPE FIRM REGISTRATION #470 | TBPLS FIRM REGISTRATION #10028801

THIS DOCUMENT IS RELEASED FOR INTERIM REVIEW PURPOSES ONLY UNDER THE AUTHORITY OF MICHAEL S. FISHER, P.E. 87704
DATE: July 26, 2024
IT IS NOT TO BE USED FOR BIDDING, CONSTRUCTION OR PERMITTING PURPOSES, PER T.E.P.A. 137.33(e)

NO.	REVISION	DATE
1	PHASE 5 LAYOUT UPDATED	07/26/24

SHEET	4	OF	36

CITY JOB No.
JOB NO. 51118-51
DATE SEPTEMBER 2024
DESIGNER TS
CHECKED DRAWN/CE/JM

RANCHO DEL CIELO - PHASE 4B
WILLIAMSON COUNTY, TEXAS

PRELIMINARY PLAT 3 OF 3

PAPE-DAWSON ENGINEERS

AUSTIN | SAN ANTONIO | HOUSTON | FORT WORTH | DALLAS
10801 N MOPAC EXPY, BLDG 3, STE 200 | AUSTIN, TX 78759 | 512.454.8711
TBPE FIRM REGISTRATION #470 | TBPLS FIRM REGISTRATION #10028801

NO.	REVISION	DATE

THIS DOCUMENT HAS BEEN PRODUCED FROM MATERIAL THAT WAS CREATED AND/OR TRANSMITTED ELECTRONICALLY AND MAY HAVE BEEN INADVERTENTLY ALTERED. NO PART OF THIS

WILLIAMSON COUNTY GENERAL CONSTRUCTION NOTES

4.1 A PRECONSTRUCTION MEETING WILL BE SCHEDULED PRIOR TO THE START OF CONSTRUCTION. THE DESIGN ENGINEER, OWNER, CONTRACTOR, SUBCONTRACTORS, AND THE COUNTY ENGINEER SHALL ATTEND THIS MEETING. ALL ROADS ARE TO BE CONSTRUCTED IN ACCORDANCE WITH THE SPECIFICATIONS FOUND IN THE CURRENT VERSION OF THE TEXAS DEPARTMENT OF TRANSPORTATION MANUAL STANDARD SPECIFICATIONS FOR CONSTRUCTION OF HIGHWAYS, STREETS, AND BRIDGES UNLESS OTHERWISE STATED ON THE CONSTRUCTION DOCUMENTS APPROVED BY THE COUNTY ENGINEER.

4.2 ALL MATERIALS SHALL BE SAMPLED AND TESTED BY AN INDEPENDENT TESTING LABORATORY IN ACCORDANCE WITH THE CONSTRUCTION DOCUMENTS APPROVED BY THE COUNTY ENGINEER. THE OWNER SHALL PAY FOR ALL TESTING SERVICES AND SHALL FURNISH THE COUNTY ENGINEER WITH CERTIFIED COPIES OF THESE TEST RESULTS. THE COUNTY ENGINEER MUST APPROVE THE TEST RESULTS PRIOR TO CONSTRUCTING THE NEXT COURSE OF THE ROADWAY STRUCTURE. ANY MATERIAL WHICH DOES NOT MEET THE MINIMUM REQUIRED TEST SPECIFICATIONS SHALL BE REMOVED AND RECOMPACTED OR REPLACED UNLESS ALTERNATIVE REMEDIAL ACTION IS APPROVED IN WRITING FROM THE COUNTY ENGINEER.

4.3 EXCEPT FOR ELECTRICAL LINES, ALL UNDERGROUND NONFERROUS UTILITIES WITHIN A RIGHT-OF-WAY OR EASEMENT MUST BE ACCOMPANIED BY FERROUS METAL LINES TO AID IN TRACING THE LOCATION OF SAID UTILITIES THROUGH THE USE OF A METAL DETECTOR.

4.4 ALL PAVEMENTS ARE TO BE DESIGNED BY A REGISTERED PROFESSIONAL ENGINEER. THE DESIGN SHALL BE BASED ON A 20-YEAR DESIGN LIFE AND IN CONJUNCTION WITH RECOMMENDATIONS BASED ON A SOILS REPORT OF SAMPLES TAKEN ALONG THE PROPOSED ROADWAYS. TEST BORINGS SHALL BE PLACED AT A MAXIMUM SPACING OF 500 FEET OR OTHER SAMPLING FREQUENCY APPROVED BY THE COUNTY ENGINEER BASED ON RECOMMENDATIONS PROVIDED BY THE GEOTECHNICAL ENGINEER. THE SOILS REPORT AND PAVEMENT DESIGN SHALL BE SUBMITTED TO THE COUNTY ENGINEER FOR REVIEW. THE PAVEMENT DESIGN MUST BE APPROVED BY THE COUNTY ENGINEER PRIOR TO OR CONCURRENTLY WITH THE REVIEW AND APPROVAL OF THE CONSTRUCTION PLANS. IN ADDITION TO THE BASIS OF THE PAVEMENT DESIGN, THE SOILS REPORT SHALL CONTAIN THE RESULTS OF SAMPLED AND TESTED SUBGRADE FOR PLASTICITY INDEX, PH, SULFATE CONTENT, AND MAXIMUM DENSITY.

B5. SUBGRADE

5.1 THE PREPARATION OF THE SUBGRADE SHALL FOLLOW GOOD ENGINEERING PRACTICES AS DIRECTED BY THE COUNTY ENGINEER IN CONJUNCTION WITH RECOMMENDATIONS OUTLINED IN THE GEOTECHNICAL REPORT. WHEN THE PLASTICITY INDEX (PI) IS GREATER THAN 20, A SUFFICIENT AMOUNT OF LIME SHALL BE ADDED AS DESCRIBED IN ITEM 260 OF THE CURRENT EDITION OF THE TxDOT STANDARD SPECIFICATIONS FOR CONSTRUCTION UNTIL THE PI IS LESS THAN 20. IF THE ADDITION OF LIME AS DESCRIBED IN ITEM 260 IS NOT FEASIBLE, AN ALTERNATE STABILIZING DESIGN SHALL BE PROPOSED AND SUBMITTED TO THE COUNTY ENGINEER FOR APPROVAL. THE SUBGRADE SHALL BE PREPARED AND COMPACTED TO ACHIEVE A DRY DENSITY PER TxDOT ITEM 132. IN ADDITION, PROOF ROLLING MAY BE REQUIRED BY THE COUNTY ENGINEER.

5.2 THE SUBGRADE SHALL BE INSPECTED AND APPROVED BY AN INDEPENDENT TESTING LABORATORY AND A CERTIFIED COPY OF ALL INSPECTION REPORTS FURNISHED TO THE COUNTY ENGINEER, WHO MUST APPROVE THE REPORT PRIOR TO APPLICATION OF THE BASE MATERIAL. ALL DENSITY TEST REPORTS SHALL INCLUDE A COPY OF THE WORK SHEET SHOWING THE PERCENTAGE OF THE MAXIMUM DRY (PROCTOR) DENSITY. THE NUMBER AND LOCATION OF ALL SUBGRADE TESTS SHALL BE DETERMINED BY THE COUNTY ENGINEER.

B6. BASE MATERIAL

6.1 BASE MATERIAL SHALL CONFORM TO ITEM 247 OF THE CURRENT EDITION OF THE TxDOT STANDARD SPECIFICATIONS FOR CONSTRUCTION, "FLEXIBLE BASE". THE BASE MATERIAL SHALL BE TYPE A GRADE A, TYPE A GRADE 2, OR AS APPROVED BY THE COUNTY ENGINEER.

6.2 EACH LAYER OF BASE COURSE SHALL BE TESTED FOR IN-PLACE DRY DENSITY AND MEASURED FOR COMPACTED THICKNESS. THE NUMBER AND LOCATION OF ALL BASE TEST SAMPLES SHALL BE DETERMINED BY THE COUNTY ENGINEER.

6.3 THE BASE SHALL BE PREPARED AND COMPACTED TO ACHIEVE A MINIMUM OF 100% OF THE MAXIMUM (PROCTOR) DENSITY OR AS APPROVED BY THE COUNTY ENGINEER UPON RECOMMENDATION BY THE TESTING LABORATORY. THE MAXIMUM LIFT SHALL NOT EXCEED SIX INCHES. THE BASE MUST BE INSPECTED AND APPROVED BY AN INDEPENDENT TESTING LABORATORY AND A CERTIFIED COPY OF THE TEST RESULTS FURNISHED TO THE COUNTY ENGINEER FOR APPROVAL. PRIOR TO THE PLACEMENT OF THE FIRST LIFT OF BASE, THE STOCKPILE SHALL BE TESTED FOR THE SPECIFICATIONS FOUND IN ITEM 247 TABLE 1 AND THE RESULT FURNISHED TO THE COUNTY ENGINEER FOR APPROVAL.

B7. WEARING SURFACE

7.1 URBAN ROADS REQUIRE A MINIMUM 2" WEARING SURFACE OF TxDOT HMAC TYPE D. THE MIX SHALL BE FROM A TXDOT CERTIFIED PLANT. THE MIX DESIGN SHALL BE SUBMITTED TO THE COUNTY ENGINEER FOR APPROVAL PRIOR TO PLACEMENT OF THE MATERIAL. CONTRACTOR'S QUALITY CONTROL (QQC) TEST REPORTS SHALL BE SUBMITTED TO THE COUNTY ENGINEER ON A DAILY BASIS. AS A MINIMUM, DAILY QQC TESTING OF THE PRODUCED MIX SHALL INCLUDE: SIEVE ANALYSIS TEX-200-F, ASPHALT CONTENT TEX-210-F, HVEEM STABILITY TEX-208-F, LABORATORY COMPACTED DENSITY TEX-207-F. AND MAXIMUM SPECIFIC GRAVITY TEX-227-F. THE NUMBER AND LOCATION OF ALL HMAC TESTS SHALL BE DETERMINED BY THE COUNTY ENGINEER WITH A MINIMUM OF THREE, 6-INCH DIAMETER FIELD CORES SECURED AND TESTED BY THE CONTRACTOR FROM EACH DAY'S PAVING. THE NUMBER AND LOCATION OF ALL HMAC TEST SAMPLES SHALL BE DETERMINED BY THE COUNTY ENGINEER.

7.2 RURAL ROADS MAY USE EITHER THE SPECIFICATIONS FOUND IN B7.1 OR A TWO-COURSE SURFACE IN ACCORDANCE WITH ITEM 316, TREATMENT WEARING SURFACE, OF THE CURRENT EDITION OF THE TxDOT STANDARD SPECIFICATIONS FOR CONSTRUCTION. THE TYPE AND RATE OF ASPHALT AND AGGREGATE SHALL BE INDICATED ON THE PLANS AS A BASIS OF ESTMATE AND SHALL BE DETERMINED AT THE PRECONSTRUCTION CONFERENCE. AGGREGATE USED IN THE MIX SHALL BE ON THE TxDOT QUALITY MONITORING SCHEDULE. AGGREGATE SHALL BE TYPE B GRADE 4. GRADATION TESTS SHALL BE REQUIRED FOR EACH 300 CUBIC YARDS OF MATERIAL PLACED WITH A MINIMUM OF TWO TESTS PER EACH GRADE PER EACH PROJECT. TEST RESULTS SHALL BE REVIEWED BY THE COUNTY ENGINEER PRIOR TO APPLICATION OF THE MATERIAL.

B8. CONCRETE PAVEMENT

8.1 IN LIEU OF BITUMINOUS PAVEMENT, PORTLAND CEMENT CONCRETE PAVEMENT MAY BE USED. IN SUCH CASES, THE PAVEMENT THICKNESS SHALL BE A MINIMUM OF 9 INCHES OF CONCRETE, AND SHALL BE JOINTED AND REINFORCED IN ACCORDANCE WITH THE DETAIL INCLUDED IN APPENDIX J. THE MIX SHALL BE FROM A TxDOT CERTIFIED PLANT. THE MIX DESIGN SHALL BE SUBMITTED TO THE COUNTY ENGINEER FOR APPROVAL PRIOR TO PLACEMENT OF THE MATERIAL.

B9. CONCRETE - GENERAL

9.1 UNLESS OTHERWISE SPECIFIED, CONCRETE SHALL BE IN ACCORDANCE WITH ITEM 421 OF THE CURRENT EDITION OF THE TxDOT STANDARD SPECIFICATIONS FOR CONSTRUCTION AND BE PLACE IN ACCORDANCE WITH THE APPLICABLE ITEM.

9.2 ALL CONCRETE SHALL BE TESTED FOR COMPRESSIVE STRENGTH. ONE SET OF THREE CONCRETE TEST CYLINDERS SHALL BE MOLDED FOR EVERY 50 CUBIC YARDS OF CONCRETE PLACED FOR EACH CLASS OF CONCRETE PER DAY, OR AT ANY OTHER INTERVAL AS DETERMINED BY THE COUNTY ENGINEER. A SLUMP TEST SHALL BE REQUIRED WITH EACH SET OF OF TEST CYLINDERS. ONE CYLINDER SHALL BE TESTED FOR COMPRESSIVE STRENGTH AT AN AGE OF SEVEN DAYS AND THE REMAINING TWO CYLINDERS SHALL BE TESTED AT 28 DAYS OF AGE.

CONSTRUCTION SEQUENCE

1. INSTALL ALL TEMPORARY EROSION CONTROL DEVICES (SILT FENCE, ROCK BERMS, ETC.)
2. CLEAR VEGETATION FROM SITE.
3. ROUGH CUT ALL REQUIRED OR NECESSARY PONDS. INSTALL TEMPORARY SEDIMENT POND AS APPROPRIATE.
4. ROUGH CUT STREETS TO SUBGRADE.
5. INSTALL WASTEWATER LINES AND APPURTENANCES.
6. INSTALL WATER LINES AND APPURTENANCES.
7. INSTALL STORM SEWER PIPES, DRAINAGE CHANNELS, DRAINAGE STRUCTURES, INLETS. ETC.
8. RE-GRADE STREETS TO PROPOSED SUBGRADE (ANY FILL MATERIAL SHALL BE TESTED PRIOR TO PLACEMENT AND HAVE A P.I. LESS THAN 20).
9. INSTALL FIRST COURSE BASE MATERIAL
10. INSTALL CURB AND GUTTER, CONCRETE VALLEY GUTTERS, ETC.
11. INSTALL SECOND COURSE BASE MATERIAL
12. INSTALL STREET PAVEMENT.
13. INSTALL STREET SIGNAGE, STREET END BARRICADES, ETC.
14. ESTABLISH REVEGETATION IN ALL DISTURBED AREAS.
15. REMOVE TEMPORARY EROSION CONTROL DEVICES.

TRENCH SAFETY NOTES:

1. ALL CONSTRUCTION OPERATIONS SHALL BE ACCOMPLISHED IN ACCORDANCE WITH APPLICABLE REGULATIONS OF THE U.S. OCCUPATIONAL SAFETY AND HEALTH ADMINISTRATION.

2. ALL TRENCH CONSTRUCTION SHALL BE CONDUCTED IN ACCORDANCE WITH 'SAFETY AND HEALTH" REGULATIONS CONTAINED IN SUBPART P OF PART 1926 OF THE CODE OF FEDERAL REGULATIONS.

3. IN ACCORDANCE WITH THE LAWS OF THE STATE OF TEXAS AND THE U.S. OCCUPATIONAL SAFETY AND HEALTH ADMINISTRATION REGULATIONS, ALL TRENCHES OVER FIVE (5) FT. IN DEPTH IN EITHER HARD AND COMPACT OR SOFT AND UNSTABLE SOIL SHALL BE SLOPED, SHORED, SHEETED, BRACED OR OTHERWISE SUPPORTED. FURTHERMORE, ALL TRENCHES LESS THAN FIVE FEET IN DEPTH SHALL BE EFFECTIVELY PROTECTED WITH HAZARDOUS GROUND MOVEMENT MAY BE EXPECTED. TRENCH SAFETY SYSTEMS TO BE UTILIZED FOR THIS PROJECT SHALL BE PREPARED BY A REGISTERED PROFESSIONAL ENGINEER AND PROVIDED BY THE CONTRACTOR AT HIS EXPENSE.

4. IN ACCORDANCE WITH U.S. OCCUPATIONAL SAFETY AND HEALTH ADMINISTRATION REGULATIONS, WHEN EMPLOYEES ARE REQUIRED TO BE IN TRENCHES FOUR FT. DEEP OR MORE, ADEQUATE MEANS OF EXIT, SUCH AS A LADDER OR STEPS, MUST BE PROVIDED AND LOCATED SO AS TO REQUIRE NO MORE THAN 25 FT. OF LATERAL TRAVEL.

5. IF TRENCH SAFETY SYSTEM DETAILS WERE NOT PROVIDED IN THE PLANS BECAUSE TRENCHES WERE EXPECTED TO BE LESS THAN FIVE FT. IN DEPTH AND, DURING CONSTRUCTION, IT IS FOUND THAT TRENCHES ARE, IN FACT, FIVE FT. OR MORE IN DEPTH OR TRENCHES ARE LESS THAN FIVE FT. IN DEPTH IN AN AREA WHERE HAZARDOUS GROUND MOVEMENT IS EXPECTED, ALL CONSTRUCTION SHALL CEASE, THE TRENCHED AREA SHALL BE BARRICADED AND THE ENGINEER SHALL BE NOTIFIED IMMEDIATELY. CONSTRUCTION SHALL NOT RESUME UNTIL APPROPRIATE TRENCH SAFETY SYSTEM DETAILS ARE PREPARED BY A REGISTERED PROFESSIONAL ENGINEER, ARE SUBMITTED TO AND ACCEPTED BY THE OWNER, AND A BID ITEM FOR IMPLEMENTATION OF TRENCH SAFETY SYSTEMS IS ADDED TO THE CONTRACT BY CHANGE ORDER.

GENERAL NOTES

1. LOCATION AND DEPTH OF EXISTING UTILITIES SHOWN HEREON ARE APPROXIMATE ONLY. ACTUAL LOCATIONS AND DEPTHS MUST BE VERIFIED BY THE CONTRACTOR PRIOR TO THE CONSTRUCTION AND THE CONTRACTOR SHALL BE RESPONSIBLE FOR THE PROTECTION OF SAME DURING CONSTRUCTION.

2. SITE CONTRACTOR IS RESPONSIBLE FOR CLEARING THE SITE OF ALL OBSTRUCTIONS THAT EXIST ON THIS SITE PRIOR TO THE START OF CONSTRUCTION OR DURING THE CONSTRUCTION SO AS TO NOT TO INTERFERE WITH HOME CONSTRUCTION.

3. ALL EXISTING ITEMS WITHIN PROJECT AREA TO BE REMOVED UNLESS OTHERWISE NOTED. CONTRACTOR IS RESPONSIBLE FOR REPLACING EXISTING ITEMS REMOVED DURING DEMOLITION THAT WERE TO REMAIN.

4. CONTRACTOR IS RESPONSIBLE FOR COORDINATION WITH ALL UTILITY COMPANIES REGARDING REMOVAL OF EXISTING SERVICES, VERIFYING UTILITIES ARE SHUT OFF OR DISCONNECTED AND ALL POSSIBLE SAFETY PRECAUTIONS HAVE BEEN ENACTED TO ENSURE THE SAFEST ENVIRONMENT FOR ALL PERSONNEL.

5. ALL AREAS DISTURBED BY CONSTRUCTION SHALL BE SEEDED AND REVEGETATED AFTER CONSTRUCTION IS COMPLETE. CONTRACTOR SHALL BE RESPONSIBLE FOR ESTABLISHING VEGETATION IN ALL DISTURBED AREAS BY PERIODIC WATERING OR OTHER ACCEPTABLE MEANS.

6. CONTRACTOR SHALL BE RESPONSIBLE FOR ACQUIRING ALL NECESSARY PERMITS/APPROVALS BEFORE BEGINNING CONSTRUCTION.

7. ALL GRADES AND CONTOURS SHOWN ARE FINAL, TOP OF FINISH SURFACE ELEVATIONS, UNLESS OTHERWISE NOTED.

8. POSITIVE DRAINAGE SHALL BE MAINTAINED ON ALL SURFACE AREAS WITHIN THE SCOPE OF THIS PROJECT. DRAINAGE SHALL BE DIRECTED AWAY FROM ALL BUILDING FOUNDATIONS. CONTRACTOR TO TAKE PRECAUTIONS NOT TO ALLOW ANY PONDING OF WATER.

9. CONTRACTOR TO OBTAIN GRADES SHOWN HEREON +/- ONE-TENTH (0.10') FOOT.

10. ALL DISTURBED AREAS SHALL BE REVEGETATED IN ACCORDANCE WITH THE PROJECT SPECIFICATIONS.

11. ALL EARTHEN SLOPES SHALL BE A MAXIMUM OF 3:1 AND A MINIMUM OF 2.0% UNLESS OTHERWISE NOTED.

12. CONTRACTOR TO AVOID INSTALLATION OF IMPROVEMENTS WITHIN THE ROADWAY OVERBUILD, INCLUDING BUT NOT LIMITED TO IRRIGATION, PLANTINGS, AND SILT FENCE.

13. ALL MATERIALS AND CONSTRUCTION PROCEDURES WITHIN THE SCOPE OF THIS CONTRACT WHERE NOT SPECIFICALLY COVERED IN THE PROJECT SPECIFICATIONS SHALL CONFORM TO ALL APPLICABLE LOCAL. CODES AND TEXAS DEPARTMENT OF TRANSPORTATION STANDARD SPECIFICATIONS (LATEST EDITION).

14. CONTRACTOR SHALL BE RESPONSIBLE FOR RESTORING ANY DAMAGES DONE TO EXISTING BUILDINGS, UTILITIES, FENCES, PAVEMENT, CURBS OR DRIVEWAYS TO ITS ORIGINAL, OR BETTER, CONDITION.

15. CONTRACTOR SHALL IMMEDIATELY NOTIFY THE ENGINEER OF ANY QUESTIONS THAT MAY ARISE CONCERNING THE INTENT, PLACEMENT, OR LIMITS OF DIMENSIONS OR GRADES NECESSARY FOR CONSTRUCTION OF THIS PROJECT.

16. TREE PROTECTION SHALL BE INSTALLED IN ACCORDANCE WITH PROJECT PLANS AND SPECIFICATIONS.

17. ALL EXCAVATION IS UNCLASSIFIED.

18. ANY FILL TO BE PLACED IN EXCESS OF 8 INCHES DEEP SHALL BE PLACED IN CONFORMANCE WITH THE REQUIREMENTS OF FHA/HUD DATA SHEET 79G. A LETTER OF CERTIFICATION FROM A QUALIFIED GEOTECHNICAL ENGINEER SHALL BE PRESENTED UPON COMPLETION OF FILLING ACTIVITIES.

19. CONTRACTOR TO REFERENCE GEOTECHNICAL REPORT (INCLUDING ANY ADDENDUMS) AS PROVIDED BY OWNER.

20. CONTRACTOR IS REQUIRED TO HAVE A TCEQ TPDES PERMIT ISSUED BY TCEQ. A COPY OF THE PERMIT SHALL BE POSTED ON THE JOBSITE PER TCEQ REQUIREMENTS.

GENERAL UTILITY NOTES:

1. ALL MATERIALS AND CONSTRUCTION PROCEDURES WITHIN THE SCOPE OF THIS PROJECT SHALL CONFORM TO ALL APPLICABLE T.C.E.Q. SPECIFICATIONS (LATEST EDITION), THE CITY OF ROUND ROCK STANDARD SPECIFICATIONS AND RANCHO DEL CIELO M.U.D., AS WELL AS OTHER SAFETY CODES AND INSPECTION PROVISIONS APPLICABLE TO THE PROJECT AND REQUIREMENTS OF THE RANCHO DEL CIELO MUNICIPAL UTILITY DISTRICT.

2. ALL WATER PIPE SHALL BE AWWA C-900 CLASS 200 (DR18). TRACER TAPE SHALL BE PLACED OVER ALL WATER MAINS.

3. ALL MAINS SHALL BE FLUSHED, HYDROSTATICALLY TESTED, AND DISINFECTED BY THE CONTRACTOR. AS PROVIDED FOR BY TCEQ STANDARD SPECIFICATIONS FOR CONSTRUCTION.

4. FOR PURPOSES OF RECORD DRAWINGS FOR RANCHO DEL CIELO MUNICIPAL UTILITY DISTRICT, THE CONTRACTOR AND THE DESIGN ENGINEER SHALL KEEP ACCURATE RECORDS OF ALL CONSTRUCTION THAT DEVIATES FROM THE PLANS. THE DESIGN ENGINEER SHALL FURNISH RANCHO DEL CIELO MUNICIPAL UTILITY DISTRICT ACCURATE "AS-BUILT" DRAWINGS FOLLOWING COMPLETION OF ALL CONSTRUCTION SHOWING SUCH DEVIATIONS.

5. THE LOCATIONS AND DEPTHS OF EXISTING UTILITIES SHOWN ON THESE PLANS ARE APPROXIMATE ONLY. ACTUAL LOCATIONS AND DEPTHS OF UTILITIES MUST BE VERIFIED BY THE CONTRACTOR PRIOR TO CONSTRUCTION. ANY DAMAGE TO EXISTING UTILITIES SHALL BE REPAIRED BY THE CONTRACTOR AT HIS EXPENSE.

6. ALL GARBAGE OR SPOIL MATERIAL FROM THIS WORK SHALL BE REMOVED FROM THE SITE BY THE CONTRACTOR, AT HIS EXPENSE.

7. FINAL CONNECTION TO THE EXISTING WATER MAIN SHALL NOT BE MADE UNTIL THE WATER MAIN HAS BEEN PRESSURE TESTED, CHLORINATED AND RANCHO DEL CIELO MUNICIPAL UTILITY DISTRICT RELEASES THE MAIN FOR TIE-IN AND USE.

8. UNIT PRICE BID FOR "STANDARD FIRE HYDRANT ASSEMBLY"SHALL INCLUDE FIRE HYDRANT, 6-INCH GATE VALVE AND 6-INCH VALVE BOX COMPLETE, ANCHOR BEND, NIPPLES, FITTINGS, AND ALL 6-INCH DI PIPE REQUIRED (DI PIPE REQUIRED SHALL INCLUDE ALL PIPE FROM THE TEE ON THE MAIN LINE TO THE FIRE HYDRANT.)

9. WHEN SEWER MAINS ARE INSTALLED IN THE VICINITY OF WATER MAINS, SUCH INSTALLATION SHALL BE IN STRICT ACCORDANCE WITH THE TEXAS COMMISSION ON ENVIRONMENTAL QUALITY "RULES AND REGULATIONS FOR PUBLIC WATER SYSTEMS" (1998 OR ANY REVISIONS THERETO).

10. All TRENCH BACKFILL FOR THIS PROJECT SHALL BE ACCOMPLISHED ACCORDING TO THE APPROPRIATE TRENCH DETAIL.

11. THE CONTRACTOR SHALL BE RESPONSIBLE FOR ACQUIRING ALL PERMITS, TESTS, APPROVALS AND ACCEPTANCES REQUIRED TO COMPLETE CONSTRUCTION OF THIS PROJECT.

12. ALL ITEMS NOT SPECIFICALLY CALLED FOR ON THE PLANS, OR IN THE SPECIFICATIONS, BUT NECESSARY TO REASONABLY CONSTRUCT THE FACILITY OR IMPROVEMENT, SHALL BE CONSIDERED INCIDENTAL TO THE OVERALL PROJECT AND NO SEPARATE PAYMENTS WILL BE MADE FOR THESE ITEMS.

13. CONTRACTOR TO GRADE SITE TO WITHIN +/- 0.10' BEFORE THE INSTALLATION OF UTILITIES TO ENSURE PROPER COVER IS ACHIEVED.

14. CONTRACTOR SHALL VERIFY THE EXACT LOCATION OF UNDERGROUND UTILITIES AND DRAINAGE STRUCTURES WHETHER SHOWN ON THE PLANS OR NOT.

15. THE CONTRACTOR SHALL NOTIFY THE GOVERNMENTAL AND/OR UTILITY COMPANIES REGARDING THE LOCATION OF EXISTING FACILITIES PRIOR TO CONSTRUCTION.

16. THE CONTRACTOR SHALL EXCAVATE AROUND EXISTING UTILITIES WHICH INTERSECT THE PROPOSED ALIGNMENT OF THE SERVICES AND NOTIFY THE ENGINEER OF POTENTIAL CONFLICTS, PRIOR TO ANY CONSTRUCTION IN THE AREA.

17. ALL DISTURBED AREAS WITHIN EASEMENTS AND TXDOT RIGHT-OF-WAY SHALL BE HYDRO-MULCHED IN ACCORDANCE WITH RANCHO DEL CIELO MUNICIPAL UTILITY DISTRICT AND TXDOT SPECIFICATIONS.

BENCHMARK #120 - SET CHISELED SQUARE ON CONCRETE HEADWALL ON THE NORTH SIDE OF COUNTY ROAD 238
GRID NORTHING: 10257996.4
GRID EASTING: 3141135.7
ELEV. 862.34 - NAVD 88 (GEOID 12A)

BENCHMARK #122 - SET 5/8" IRON ROD WITH RED CAP
GRID NORTHING: 10258437.1
GRID EASTING: 3139597.9
ELEV. 841.32 - NAVD 88 (GEOID 12A)

STREET AND DRAINAGE NOTES:

1. SEE PAVING DETAIL SHEET FOR TYPICAL STREET SECTIONS.
2. CONTRACTOR SHALL REMOVE AND DISPOSE OF ALL TREES WITHIN 15' OF PROPOSED PAVEMENT AND ALL DEAD TREES WITHIN STREET RIGHT-OF-WAY.
3. CONTRACTOR TO GRADE OR REGRADE ALL AREAS WITHIN RIGHT-OF-WAY INCLUDING DITCHES FOR POSITIVE DRAINAGE.
4. CONTRACTOR SHALL GRADE TO DRAIN AREAS UPSTREAM AND DOWNSTREAM OF ALL PROPOSED CULVERTS.
5. CONTRACTOR SHALL HYDROMULCH ALL DISTURBED AREAS, INCLUDING RIGHT-OF-WAY, STEEP SLOPES AND DRAINAGE DITCHES.
6. ALL STORM DRAIN PIPES ON THIS PROJECT SHALL BE REINFORCED CONCRETE (RCP CLASS III); OR DUAL WALL ADS N-12 HDPE WITH A CORRUGATED EXTERIOR AND SMOOTH INTERIOR MEETING THE REQUIREMENTS OF ASTM F2648 AND AASHTO M294 FOR USE IN GRAVITY FLOW DRAINAGE APPLICATIONS. ALL WYES, BENDS, PIPE SIZE CHANGES AND TRANSITIONS SHALL BE PREFABRICATED AND SHALL CONFORM TO ASTM F2306 AND AASHTO M294. ALL MATERIAL, INSTALLATION, COMPACTION, BEDDING, AND BACKFILL REQUIREMENTS AND PROCEDURES FOR DUAL WALL ADS N-12 HDPE USED ON THIS PROJECT SHALL ALSO BE IN ACCORDANCE WITH TXDOT SPECIAL SPECIFICATION 4122 (REF. TXDOT SPECIAL SPECIFICATION 4122 PROVIDED ON SHEET 92).
7. ALL SIGNAGE SHALL BE IN ACCORDANCE WITH THE LATEST EDITION OF THE TEXAS MANUAL ON UNIFORM TRAFFIC CONTROL DEVICES.
8. ALL DIMENSIONS ARE TO FACE OF CURB UNLESS OTHERWISE NOTED.
9. ALL STRIPING SHALL BE THERMOPLASTIC.
10. ANY FILL TO BE PLACED IN EXCESS OF 8 INCHES DEEP SHALL BE PLACED IN CONFORMANCE WITH THE REQUIREMENTS OF FHA/HUD DATA SHEET 79G. A LETTER OF CERTIFICATION FROM A QUALIFIED GEOTECHNICAL ENGINEER SHALL BE PRESENTED UPON COMPLETION OF FILLING ACTIVITIES.
11. PAVING CRITERIA:

A GEOTECHNICAL INVESTIGATION REPORT FOR THIS PROJECT WAS PERFORMED BY MLA GEOTECHNICAL IN APRIL 2022. ACCORDING TO THAT INVESTIGATION, THE STREET SECTIONS ARE TO BE CONSTRUCTED AS FOLLOWS:

MLA Geotechnical "put us to the test"
A Division of MLA Labs, Inc.

GEOTECHNICAL INVESTIGATION
PAVEMENT THICKNESS
RECOMMENDATIONS

Rancho Del Cielo - REVISED
Jarrell, Texas

Report For:
Sunwest Company
3939 Bee Caves Road, Building C100
Austin, Texas 78746

April 2022

Engineer's Job # 20101100.003

MLA Geotechnical TBPE #1094 # F-2694
Geotechnical Engineering and
Construction Materials Testing

Christopher P. Elliott
Vice President

Timothy R. Weston, P.E.
President
4/21/22

TIMOTHY R. WESTON 97938 LICENSED PROFESSIONAL ENGINEER

Nicholas J. Page P.E.
Geotechnical Engineer

STATE OF TEXAS NICHOLAS J. PAGE 122579 LICENSED PROFESSIONAL ENGINEER
4/21/22

2804 Longhorn Boulevard Austin, Texas 78758 512-873-8899
TBPGE F-2694 Dallas/Fort Worth Austin San Antonio Houston Bryan/College Station Killeen

Rancho Del Cielo - REVISED
Engineer's Job No.: 20101100.003

RECOMMENDATIONS - PAVEMENT THICKNESS SECTIONS

The recommendations below constitute a pavement design intended to address the subsurface and traffic conditions for each street classification. This information is intended to be incorporated into a set of civil engineering plans such that the pavement cross sections (including curb and gutter details) and street classifications specific to each street (which are unknown at this time) can be appropriately addressed.

Street Classification	Subgrade Material	Flex Base, Emulsified Concrete, in	Crushed Limestone Flex Base, in	Lime Stabilized Subgrade, in	Geogrid
Local Street	Subgrade PI > 20	2.0	9	8*	X*
~~Residential~~ Collector	Subgrade PI > 20	3.0	14	8*	X*
Neighborhood ~~Collector~~	Subgrade PI > 20	3.0	10	6*	X*

Notes:
1. * - A single layer of Tensar 130S or equivalent to be approved by the Geotechnical Engineer should be placed below the crushed limestone base layer. If the subgrade is composed of limestone, the geogrid and lime stabilized subgrade can be omitted.
2. Given the known variability of surface soils and the presence of faults at this site, the geotechnical engineer must verify the subgrade before installation of the pavement system can proceed. Multiple site visits may be required depending upon the construction schedule. Finalized distinction between pavement thickness section options shall be provided as addendums to this report as these observations are completed. Please contact the geotechnical engineer when the utility trenches are open.
3. The concern has arisen that ground water may enter the utility trenches at this site causing detrimental settlement of the utility trench backfill, especially near contact zones between differing geologies. To address this concern, the wastewater utility trenches could be turned in to French drains. To achieve this, additional poorly-graded gravel, such as the gravel already being used for pipe bedding at this site, should be placed above the pipe bedding material to the elevation where ground water is encountered. This extra layer of gravel should be covered with a geotextile fabric to prevent material above the gravel from infiltrating the gravel layer. Then, the utility trench should be filled in compacted layers in accordance with the construction plans. The wastewater utility trench must then be allowed to daylight from its lowest point such that water does not accumulate in the utility trench. Additional gravel may be required in the utility trench depending upon the depth that ground water is entering the utility trench during construction. A line item for French drains should be included in construction bid documents.

-S-

NO.	REVISION	DATE

STATE OF TEXAS JENNIFER C. FRANKLIN 118838 LICENSED PROFESSIONAL ENGINEER 4/25/24

PAPE-DAWSON ENGINEERS
AUSTIN | SAN ANTONIO | HOUSTON | FORT WORTH | DALLAS
10801 N MOPAC EXPY, BLDG 3, STE 200 | AUSTIN, TX 78759 | 512.454.8711
TBPE FIRM REGISTRATION #470 | TBPLS FIRM REGISTRATION #10028801

RANCHO DEL CIELO - PHASE 4B
WILLIAMSON COUNTY, TEXAS
CONSTRUCTION NOTES 1 OF 3

CITY JOB No.
JOB NO. 51118-61
DATE SEPTEMBER 2024
DESIGNER TS
CHECKED DRAWN CE/JM
SHEET 5 OF 36

Date: Sep 24, 2024, 3:55pm User ID: tstephens
File: H:\Projects\51118-61_Phase 4\130 Construction Documents\Civil\CN51118-61.dwg
THIS DOCUMENT HAS BEEN PRODUCED FROM MATERIAL THAT WAS STORED AND/OR TRANSMITTED ELECTRONICALLY AND MAY HAVE BEEN INADVERTENTLY ALTERED. RELY ONLY ON FINAL HARDCOPY MATERIALS BEARING THE CONSULTANT'S ORIGINAL SIGNATURE AND SEAL.

30 TAC SECTION 290.44(E)(4)
WATER LINE / WASTEWATER SEPARATION REQUIREMENTS

WHEN NEW POTABLE WATER DISTRIBUTION LINES ARE CONSTRUCTED, THEY SHALL BE INSTALLED NO CLOSER THAN NINE FEET IN ALL DIRECTIONS TO WASTEWATER COLLECTION FACILITIES. ALL SEPARATION DISTANCES SHALL BE MEASURED FROM THE OUTSIDE SURFACE OF EACH OF THE RESPECTIVE PIECES.

(4) WHERE THE NINE-FOOT SEPARATION DISTANCE CANNOT BE ACHIEVED, THE FOLLOWING CRITERIA SHALL APPLY.

(A) NEW WATERLINE INSTALLATION – PARALLEL LINES.

I. WHERE A NEW POTABLE WATERLINE PARALLELS AN EXISTING, NON-PRESSURE OR PRESSURE RATED WASTEWATER MAIN OR LATERAL AND THE LICENSED PROFESSIONAL ENGINEER LICENSED IN THE STATE OF TEXAS IS ABLE TO DETERMINE THAT THE EXISTING WASTEWATER MAIN OR LATERAL IS NOT LEAKING, THE NEW POTABLE WATERLINE SHALL BE LOCATED AT LEAST TWO FEET ABOVE THE EXISTING WASTEWATER MAIN OR LATERAL, MEASURED VERTICALLY, AND AT LEAST FOUR FEET AWAY, MEASURED HORIZONTALLY, FROM THE EXISTING WASTEWATER MAIN OR LATERAL. EVERY EFFORT SHALL BE EXERTED NOT TO DISTURB THE BEDDING AND BACKFILL OF THE EXISTING WASTEWATER MAIN OR LATERAL.

II. WHERE A NEW POTABLE WATERLINE PARALLELS AN EXISTING PRESSURE RATED WASTEWATER MAIN OR LATERAL AND IT CANNOT BE DETERMINED BY THE LICENSED PROFESSIONAL ENGINEER IF THE EXISTING LINE IS LEAKING, THE EXISTING WASTEWATER MAIN OR LATERAL SHALL BE REPLACED WITH AT LEAST 150 PSI PRESSURE RATED PIPE. THE NEW POTABLE WATERLINE SHALL BE LOCATED AT LEAST TWO FEET ABOVE THE NEW WASTEWATER LINE, MEASURED VERTICALLY, AND AT LEAST FOUR FEET AWAY, MEASURED HORIZONTALLY, FROM THE REPLACED WASTEWATER MAIN OR LATERAL.

III. WHERE A NEW POTABLE WATERLINE PARALLELS A NEW WASTEWATER MAIN, THE WASTEWATER MAIN OR LATERAL SHALL BE CONSTRUCTED OF AT LEAST 150 PSI PRESSURE RATED PIPE. THE NEW POTABLE WATERLINE SHALL BE LOCATED AT LEAST TWO FEET ABOVE THE WASTEWATER MAIN OR LATERAL, MEASURED VERTICALLY, AND AT LEAST FOUR FEET AWAY, MEASURED HORIZONTALLY, FROM THE WASTEWATER MAIN OR LATERAL.

(B) NEW WATERLINE INSTALLATION – CROSSING LINES.

I. WHERE A NEW POTABLE WATERLINE CROSSES AN EXISTING, NON-PRESSURE RATED WASTEWATER MAIN OR LATERAL, ONE SEGMENT OF THE WATERLINE PIPE SHALL BE CENTERED OVER THE WASTEWATER MAIN OR LATERAL SUCH THAT THE JOINTS OF THE WATERLINE PIPE ARE EQUIDISTANT AND AT LEAST NINE FEET HORIZONTALLY FROM THE CENTERLINE OF THE WASTEWATER MAIN OR LATERAL. THE POTABLE WATERLINE SHALL BE AT LEAST TWO FEET ABOVE THE WASTEWATER MAIN OR LATERAL. WHENEVER POSSIBLE, THE CROSSING SHALL BE CENTERED BETWEEN THE JOINTS OF THE WASTEWATER MAIN OR LATERAL. IF THE EXISTING WASTEWATER MAIN OR LATERAL IS DISTURBED OR SHOWS SIGNS OF LEAKING, IT SHALL BE REPLACED FOR AT LEAST NINE FEET IN BOTH DIRECTIONS (18 FEET TOTAL) WITH AT LEAST 150 PSI PRESSURE RATED PIPE.

II. WHERE A NEW POTABLE WATERLINE CROSSES AN EXISTING, PRESSURE RATED WASTEWATER MAIN OR LATERAL, ONE SEGMENT OF THE WATERLINE PIPE SHALL BE CENTERED OVER THE WASTEWATER MAIN OR LATERAL SUCH THAT THE JOINTS OF THE WATERLINE PIPE ARE EQUIDISTANT AND AT LEAST NINE FEET HORIZONTALLY FROM THE CENTERLINE OF THE WASTEWATER MAIN OR LATERAL. THE POTABLE WATERLINE SHALL BE AT LEAST SIX INCHES ABOVE THE WASTEWATER MAIN OR LATERAL. WHENEVER POSSIBLE, THE CROSSING SHALL BE CENTERED BETWEEN THE JOINTS OF THE WASTEWATER MAIN OR LATERAL. IF THE EXISTING WASTEWATER MAIN OR LATERAL SHOWS SIGNS OF LEAKING. IT SHALL BE REPLACED FOR AT LEAST NINE FEET IN BOTH DIRECTIONS (18 FEET TOTAL) WITH AT LEAST 150 PSI PRESSURE RATED PIPE.

III. WHERE A NEW POTABLE WATERLINE CROSSES A NEW, NON-PRESSURE RATED WASTEWATER MAIN OR LATERAL AND THE STANDARD PIPE SEGMENT LENGTH OF THE WASTEWATER MAIN OR LATERAL IS AT LEAST 18 FEET, ONE SEGMENT OF THE WATERLINE PIPE SHALL BE CENTERED OVER THE WASTEWATER MAIN OR LATERAL SUCH THAT THE JOINTS OF THE WATERLINE PIPE ARE EQUIDISTANT AND AT LEAST NINE FEET HORIZONTALLY FROM THE CENTERLINE OF THE WASTEWATER MAIN OR LATERAL. WHENEVER POSSIBLE, THE CROSSING SHALL BE CENTERED BETWEEN THE JOINTS OF THE WASTEWATER MAIN OR LATERAL. THE WASTEWATER PIPE SHALL HAVE A MINIMUM PIPE STIFFNESS OF 115 PSI AT 5.0% DEFLECTION. THE WASTEWATER MAIN OR LATERAL SHALL BE EMBEDDED IN CEMENT STABILIZED SAND (SEE CLAUSE (VI) OF THIS SUBPARAGRAPH) FOR THE TOTAL LENGTH OF ONE PIPE SEGMENT PLUS 12 INCHES BEYOND THE JOINT ON EACH END.

IV. WHERE A NEW POTABLE WATERLINE CROSSES A NEW, NON-PRESSURE RATED WASTEWATER MAIN OR LATERAL AND A STANDARD LENGTH OF THE WASTEWATER PIPE IS LESS THAN 18 FEET IN LENGTH, THE POTABLE WATER PIPE SEGMENT SHALL BE CENTERED OVER THE WASTEWATER LINE. THE MATERIALS AND METHOD OF INSTALLATION SHALL CONFORM WITH ONE OF THE FOLLOWING OPTIONS:

i. WITHIN NINE FEET HORIZONTALLY OF EITHER SIDE OF THE WATERLINE, THE WASTEWATER PIPE AND JOINTS SHALL BE CONSTRUCTED WITH PIPE MATERIAL HAVING A MINIMUM PRESSURE RATING OF AT LEAST 150 PSI.AN ABSOLUTE MINIMUM VERTICAL SEPARATION DISTANCE OF TWO FEET SHALL BE PROVIDED. THE WASTEWATER MAIN OR LATERAL SHALL BE LOCATED BELOW THE WATERLINE.

ii. ALL SECTIONS OF WASTEWATER MAIN OR LATERAL WITHIN NINE FEET HORIZONTALLY OF THE WATERLINE SHALL BE ENCASED IN AN 18-FOOT (OR LONGER) SECTION OF PIPE. FLEXIBLE ENCASING PIPE SHALL HAVE A MINIMUM PIPE STIFFNESS OF 115 PSI AT 5.0% DEFLECTION. THE ENCASING PIPE SHALL BE CENTERED ON THE WATERLINE AND SHALL BE AT LEAST TWO NOMINAL PIPE DIAMETERS LARGER THAN THE WASTEWATER MAIN OR LATERAL. THE SPACE AROUND THE CARRIER PIPE SHALL BE SUPPORTED AT FIVE-FOOT (OR LESS) INTERVALS WITH SPACERS OR BE FILLED TO THE SPRINGLINE WITH WASHED SAND. EACH END OF THE CASING SHALL BE SEALED WITH WATERTIGHT NON-SHRINK CEMENT GROUT OR A MANUFACTURED WATERTIGHT SEAL. AN ABSOLUTE MINIMUM SEPARATION DISTANCE OF SIX INCHES BETWEEN THE ENCASEMENT PIPE AND THE WATERLINE SHALL BE PROVIDED. THE WASTEWATER LINE SHALL BE LOCATED BELOW THE WATERLINE.

iii. WHEN A NEW WATERLINE CROSSES UNDER A WASTEWATER MAIN OR LATERAL, THE WATERLINE SHALL BE ENCASED AS DESCRIBED FOR WASTEWATER MAINS OR LATERALS IN SUBCLAUSE (II) OF THIS CLAUSE OR CONSTRUCTED OF DUCTILE IRON OR STEEL PIPE WITH MECHANICAL OR WELDED JOINTS AS APPROPRIATE. AN ABSOLUTE MINIMUM SEPARATION DISTANCE OF ONE FOOT BETWEEN THE WATERLINE AND THE WASTEWATER MAIN OR LATERAL SHALL BE PROVIDED. BOTH THE WATERLINE AND WASTEWATER MAIN OR LATERAL MUST PASS A PRESSURE AND LEAKAGE TEST AS SPECIFIED IN AWWA C600 STANDARDS.

V. WHERE A NEW POTABLE WATERLINE CROSSES A NEW, PRESSURE RATED WASTEWATER MAIN OR LATERAL, ONE SEGMENT OF THE WATERLINE PIPE SHALL BE CENTERED OVER THE WASTEWATER LINE SUCH THAT THE JOINTS OF THE WATERLINE PIPE ARE EQUIDISTANT AND AT LEAST NINE FEET HORIZONTALLY FROM THE CENTERLINE OF THE WASTEWATER MAIN OR LATERAL. THE POTABLE WATERLINE SHALL BE AT LEAST SIX INCHES ABOVE THE WASTEWATER MAIN OR LATERAL. WHENEVER POSSIBLE, THE CROSSING SHALL BE CENTERED BETWEEN THE JOINTS OF THE WASTEWATER MAIN OR LATERAL. THE WASTEWATER PIPE SHALL HAVE A MINIMUM PRESSURE RATING OF AT LEAST 150 PSI. THE WASTEWATER MAIN OR LATERAL SHALL BE EMBEDDED IN CEMENT STABILIZED SAND (SEE CLAUSE (VI) OF THIS SUBPARAGRAPH) FOR THE TOTAL LENGTH OF ONE PIPE SEGMENT PLUS 12 INCHES BEYOND THE JOINT ON EACH END.

VI. WHERE CEMENT STABILIZED SAND BEDDING IS REQUIRED, THE CEMENT STABILIZED SAND SHALL HAVE A MINIMUM OF 10% CEMENT PER CUBIC YARD OF CEMENT STABILIZED SAND MIXTURE, BASED ON LOOSE DRY WEIGHT VOLUME (AT LEAST 2.5 BAGS OF CEMENT PER CUBIC YARD OF MIXTURE). THE CEMENT STABILIZED SAND BEDDING SHALL BE A MINIMUM OF SIX INCHES ABOVE AND FOUR INCHES BELOW THE WASTEWATER MAIN OR LATERAL. THE USE OF BROWN COLORING IN CEMENT STABILIZED SAND FOR WASTEWATER MAIN OR LATERAL BEDDING IS RECOMMENDED FOR THE IDENTIFICATION OF PRESSURE RATED WASTEWATER MAINS DURING FUTURE CONSTRUCTION.

RANCHO DEL CIELO MUNICIPAL UTILITY DISTRICT

DISTRICT GENERAL NOTES:

1. THE DISTRICT ENGINEER, JONES-HEROY & ASSOCIATES, INC. (JASON JONES, PHONE: 512-556-2300), AND THE CITY OF JARRELL (512-746-4593) SHALL BE CONTACTED AT LEAST 2 WORKING DAYS (48-HOURS) PRIOR TO:
   I. CONDUCTING A PRE-CONSTRUCTION CONFERENCE;
   II. BEGINNING OF EACH PHASE OF CONSTRUCTION;
   III. TESTING OF WATER AND WASTEWATER LINES OR CRITICAL EQUIPMENT; AND,
   IV. FINAL WALK-THROUGH OF FACILITIES.
2. THE DISTRICT OPERATOR AND THE CITY OF JARRELL SHALL BE CONTACTED AT LEAST 3 WORKING DAYS (72-HOURS) PRIOR TO:
   I. ALL CONNECTIONS OR MODIFICATIONS TO THE EXISTING WATER OR WASTEWATER SYSTEM; AND,
   II. TESTING OF WATER AND WASTEWATER LINES OR CRITICAL EQUIPMENT.
3. THE CONTRACTOR SHALL VERIFY THE EXACT LOCATION AND DEPTHS OF UNDERGROUND UTILITIES AT LEAST 48-HOURS PRIOR TO CONSTRUCTION WHETHER SHOWN ON THE PLANS OR NOT, AND TO PROTECT THE SAME DURING CONSTRUCTION. THE FOLLOWING LOCAL UTILITY CONTACT INFORMATION IS PROVIDED FOR REFERENCE ONLY AND MAY BE UPDATED FROM TIME TO TIME:
   I. RANCHO DEL CIELO MUNICIPAL UTILITY DISTRICT: (512) 246-1400
   II. CITY OF JARRELL: (512) 746-4593
   III. TEXAS STATE-WIDE ON CALL LOCATOR: DIAL '811'
4. THE CONTRACTOR SHALL ALLOW ENTRY BY THE DISTRICT'S REPRESENTATIVE ON THE LAND OR PREMISES FOR THE PURPOSE OF INSPECTION OF CONDITIONS ON THE PREMISES DURING ALL PHASES OF CONSTRUCTION.
5. THE CONTRACTOR SHALL DIRECTLY NOTIFY THE DISTRICT'S INSPECTION REPRESENTATIVE AT LEAST 48-HOURS PRIOR TO ANY BUSINESS DAY NO WORK WILL BE PERFORMED. LACK OF NOTICE MAY RESULT IN THE CONTRACTOR BEING CHARGED THE INSPECTOR'S APPLICABLE FEES FOR DAYS NOT WORKED.
6. NO CONSTRUCTION OF ANY WATER, WASTEWATER, OR DRAINAGE FACILITIES SHALL BE ALLOWED DURING NON-BUSINESS HOURS TO INCLUDE WEEKENDS AND HOLIDAYS, UNLESS PRIOR APPROVAL IS RECEIVED BY THE DISTRICT IN WRITING.
7. CONTRACTOR SHALL DESIGNATE AN ENGLISH SPEAKING REPRESENTATIVE AT THE PROJECT SITE FOR ALL DISTRICT INSPECTIONS AND CORRESPONDENCE.
8. NO VALVES WILL BE OPENED WHICH CONNECT NEW WATER MAINS TO THE EXISTING DISTRICT SYSTEM WITHOUT PRIOR DISTRICT APPROVAL AND A DISTRICT REPRESENTATIVE PRESENT. CONTRACTOR SHALL MAINTAIN A LOG OF ALL FLUSHING LOCATIONS, DATES, TIMES, AND DURATIONS THAT MAY REQUIRE POTABLE WATER NOT OTHERWISE BEING MEASURED BY THE CONTRACTOR'S CONSTRUCTION METER. THE CONTRACTOR'S FLUSHING LOGS SHALL BE SUBMITTED AND APPROVED BY THE DISTRICT OPERATOR PRIOR TO FINAL ACCEPTANCE AND PAYMENT ON THE PROJECT.

   AS AN ALTERNATIVE, ALL INITIAL FILLING, FLUSHING, AND HYDROSTATIC TESTING OF NEW WATER MAINS MAY BE FROM THE CONTRACTOR'S CONSTRUCTION METER AND BACKFLOW PREVENTION VALVE VIA ONE OR MORE TEMPORARY JUMPER(S) INSTALLED TO BYPASS THE EXISTING DISTRICT VALVE(S). FOLLOWING A PASSING HYDROSTATIC TEST AND INITIAL FLUSHING OF THE MAIN TO ACHIEVE CHLORINE RESIDUALS ACCEPTABLE FOR PUBLIC DRINKING WATER SYSTEMS, FINAL SCOUR FLUSHING WILL BE ALLOWED THROUGH THE EXISTING DISTRICT VALVE(S) WITH A DISTRICT REPRESENTATIVE PRESENT.

   IN ALL INSTANCES, PASSING BACTERIOLOGICAL TEST(S) MUST BE PROVIDED TO THE DISTRICT BEFORE LEAVING THE EXISTING DISTRICT VALVE(S) OPEN WITHOUT A DISTRICT REPRESENTATIVE PRESENT.
9. CONTRACTOR SHALL PROPERLY DISPOSE OF ALL HIGHLY CHLORINATED FLUSH WATER (>10 MG/LITER CHLORINE RESIDUAL) WITH A DISTRICT REPRESENTATIVE PRESENT. HIGHLY CHLORINATED WATER MAY NOT BE DISPOSED OF DIRECTLY INTO THE DISTRICT'S STORM DRAIN SYSTEM, DRAINAGE CHANNELS, CREEKS, OR WASTEWATER COLLECTION SYSTEM AT A RATE WHICH MAY CAUSE DAMAGE TO THE WASTEWATER TREATMENT PROCESS OR THE ENVIRONMENT.
10. WITH THE EXCEPTION OF LOT PADS WHERE ADDITIONAL CONSTRUCTION IS PLANNED, ALL AREAS DISTURBED BY CONSTRUCTION SHALL BE SEEDED AND RE-VEGETATED AFTER CONSTRUCTION IS COMPLETE. ADDITIONALLY, ALL 4:1 OR STEEPER EARTHEN SLOPES AND CHANNEL FLOW LINES SHALL INCLUDE 4-INCHES TOPSOIL AND TEMPORARY EROSION CONTROL MATTING. ALTERNATIVE STABILIZATION METHODS WILL BE CONSIDERED ON A CASE BY CASE BASIS. CONTRACTOR SHALL BE RESPONSIBLE FOR ESTABLISHING VEGETATION BY PERIODIC WATERING OR OTHER ACCEPTABLE MEANS.
11. CONTRACTOR IS RESPONSIBLE FOR COMPLIANCE WITH TEXAS POLLUTANT DISCHARGE ELIMINATION SYSTEM (TPDES) CONSTRUCTION GENERAL PERMIT (CGP) NO. TXR150000, AS APPLICABLE.
12. CONTRACTOR IS RESPONSIBLE FOR RESTORING ANY DAMAGES TO EXISTING STRUCTURES, UTILITIES, FENCES, PAVEMENT, CURBS, LANDSCAPING, OR DRIVEWAYS TO ITS ORIGINAL, OR BETTER, CONDITION.
13. ALL GARBAGE AND SPOIL MATERIAL FROM THIS WORK SHALL BE REMOVED FROM THE SITE BY THE CONTRACTOR.
14. THE INTERIOR OF ALL PIPE, FITTINGS, AND OTHER ACCESSORIES SHALL BE KEPT FREE FROM DIRT AND FOREIGN MATTER AT ALL TIMES (INCLUDING DURING TRANSPORT AND DELIVERY) AND STORED IN A MANINER THAT WILL PROTECT THEM FROM DAMAGE. CONTRACTOR TO ENSURE THAT PIPELINE ENDS ARE COVERED CLOSEST TO TRUCK EXHAUST DURING TRANSPORT. STOCKPILED MATERIALS SHALL BE STACKED SO AS TO MINIMIZE ENTRANCE OF FOREIGN MATTER.
15. CONTRACTOR SHALL COMPLY WITH THE REQUIREMENTS OF TCEQ RULE 30 TAC 290.44 RELATING TO SEPARATION OF WATER AND WASTEWATER LINES.
16. ALL MANHOLE FRAMES, COVERS, VALVES, AND CLEANOUTS SHALL BE RAISED TO FINISHED GRADE PRIOR TO FINAL PAVING CONSTRUCTION.
17. ALL WET UTILITY INSTALLATION TO BE COMPLETE IN PLACE PRIOR TO THE INSTALLATION OF DRY UTILITIES.
18. ALL WATER SERVICE, WASTEWATER SERVICE, AND VALVE LOCATIONS SHALL BE APPROPRIATELY MARKED AS FOLLOWS:
    WATER SERVICE "W" ON FACE OF CURB
    WASTEWATER SERVICE "S" ON FACE OF CURB
    VALVE "V" ON FACE OF CURB

NON-DISTRICT NOTE REQUIREMENTS:

1. WILLIAMSON COUNTY GENERAL CONSTRUCTION NOTES (AS DIRECTED BY COUNTY)
2. TCEQ WATER/WASTEWATER SEPARATION REQUIREMENTS (FROM 30 TAC CHAPTER 290.44(E)(4))

MATERIAL SPECIFICATIONS:

1. ALL MATERIALS SHALL BE NEW, AND COMPLY WITH THE LATEST AND APPLICABLE STANDARDS FOR PUBLIC UTILITY SYSTEMS INCLUDING, BUT NOT LIMITED TO, THE ASSOCIATION OF AMERICAN WATER WORKS (AWWA), AMERICAN NATIONAL STANDARDS INSTITUTE (ANSI), AMERICAN STANDARD OF TESTING AND MATERIALS (ASTM) AND INSTALLED AND TESTED ACCORDING THE MANUFACTURER'S RECOMMENDATIONS AND LOCAL PLUMBING CODES.
2. ALL WATER MAINS LESS THAN OR EQUAL TO 12-INCH DIAMETER SHALL BE PVC WITH A MINIMUM PRESSURE RATING OF 150 POUNDS PER SQUARE INCH (PSI), MINIMUM DR-18 WALL THICKNESS RATIO, COMPLY WITH AWWA C900, AND NOT LESS THAN 6-INCHES DIAMETER.
3. ALL WATER SYSTEM VALVES, FITTINGS, AND SERVICE CONNECTIONS SHALL BE A MINIMUM 150 PSI WORKING PRESSURE RATING. ALL IRON PIPE AND FITTINGS SHALL BE WRAPPED WITH MINIMUM 8-MIL POLYETHYLENE AND SEALED WITH DUCT TAPE PER AWWA C105 GUIDELINES.
4. WATER MAIN FITTINGS SHALL BE DUCTILE IRON WITH MECHANICAL JOINTS AND COMPLY WITH AWWA C153 (FITTINGS) AND AWWA C111 (GASKETS).
5. FIRE HYDRANTS SHALL COMPLY WITH AWWA C502 FOR DRY-BARREL FIRE HYDRANTS, AND ALL WATER MAIN VALVES SHALL BE RESILIENT SEATED GATE VALVES COMPLYING WITH AWWA C509 OR AWWA C515 (DUCTILE IRON).
6. AIR VALVES ON WATER MAINS SHALL COMPLY WITH AWWA C512. AIR VALVES ON SEWER FORCE MAINS SHALL BE RATED BY THE MANUFACTURER FOR PERFORMANCE IN WASTEWATER APPLICATIONS.
7. THE METER/CURB STOPS INSTALLED IN THE WATER SYSTEM SERVICE CONNECTIONS SHALL BE LIMITED TO FORD, MCDONALD, OR AN APPROVED EQUAL MANUFACTURER. ALL WATER SERVICE CONNECTION VALVES AND FITTINGS SHALL COMPLY WITH AWWA C800.
8. GRAVITY FLOW WASTEWATER COLLECTION MAINS LESS THAN 18-INCH DIAMETER SHALL BE GREEN PVC WITH A MINIMUM SDR-26 RATING FOR WALL THICKNESS, COMPLY WITH ASTM D3034, AND NOT LESS THAN 6-INCHES DIAMETER. SERVICE CONNECTIONS SHALL BE SDR-26 PIPE WITH SDR-35 FITTINGS.
9. FORCE MAIN PIPELINES (4 TO 12 INCH DIAMETER) SHALL BE PVC WITH A MINIMUM 150 PSI WORKING PRESSURE AND DESIGNED TO WITHSTAND THE POTENTIAL SURGE GENERATED BY A SUDDEN PUMP FAILURE UNDER MAXIMUM FLOW CONDITIONS. NO WATER DESIGNATED OR BLUE PIPE SHALL BE ALLOWED IN FORCE MAIN APPLICATIONS.
10. A 6-INCH END OF MAIN WASTEWATER CLEAN-OUT IS ACCEPTABLE IN LIEU OF A MANHOLE WHEN NO EXTENSIONS ARE ANTICIPATED AND SHALL BE CONSTRUCTED PER THE DISTRICT'S STANDARD DETAIL.
11. ALL WATER MAINS SHALL HAVE 36-INCHES MINIMUM COVER IN UNPAVED AREAS AND 30-INCHES MINIMUM COVER BELOW SUBGRADE IN PAVED AREAS. ALL WASTEWATER MAINS SHALL HAVE 48-INCHES MINIMUM COVER.
12. TRACER DETECTION TAPE SHALL BE PLACED DIRECTLY ABOVE ALL WATER AND WASTEWATER MAINS AT A DEPTH OF 18-INCHES BELOW FINISHED GRADE. THE TAPE SHALL BE MINIMUM 12-INCHES WIDE AND INCASED IN A PROTECTIVE, INERT, PLASTIC JACKET AND COLOR-CODED IN ACCORDANCE WITH APWA UNIFORM COLOR CODE.
13. GAS RESISTANT PROTECTIVE COATINGS WILL BE REQUIRED ON DOMESTIC WASTEWATER MANHOLES WHERE A CONNECTION IS MADE WITH A PRESSURIZED FORCE MAIN.
14. MANHOLE COVERS SHALL BE BOLTED AND GASKETED WHEN LOCATED WITHIN A FLOOD HAZARD AREA OR DRAINAGE WAY.
15. ALL STORM DRAIN PIPES SHALL BE REINFORCED CONCRETE (RCP CLASS III); OR DUAL WALL ADS N-12 HDPE WITH A CORRUGATED EXTERIOR AND SMOOTH INTERIOR MEETING THE REQUIREMENTS OF ASTM F2648 AND AASHTO M294 FOR USE IN GRAVITY FLOW DRAINAGE APPLICATIONS. ALL WYES, BENDS, PIPE SIZE CHANGES AND TRANSITIONS SHALL BE PREFABRICATED AND SHALL CONFORM TO ASTM F2306 AND AASHTO M294.
16. MINIMUM TRENCH WIDTHS FOR HDPE DRAINAGE PIPE SHALL CONFORM TO THE REQUIREMENTS OF TABLE 1 BELOW.
17. THE DISTRICT MUST APPROVE ALL MATERIAL USED FOR PIPE EMBEDMENT AND TRENCH BACKFILL. ACCEPTABLE PIPE BEDDING MATERIAL SHALL INCLUDE PIPE BEDDING STONE, PEA GRAVEL AND IN LIEU OF SAND, AN NATURALLY OCCURRING OR MANUFACTURED STONE MATERIAL CONFORMING TO ASTM C33 FOR STONE QUALITY AND MEETING THE FOLLOWING GRADATION SPECIFICATION:

SIEVE SIZE	PERCENT RETAINED BY WEIGHT
1/2"	0
3/8"	0-2
#4	40-85
#10	95-100

ALTERNATE GRADATION TABLES WILL BE CONSIDERED BY THE DISTRICT ON A CASE BY CASE BASIS; HOWEVER, MANUFACTURED SAND OR ITS EQUIVALENT IS NOT ALLOWED IN TRENCHES WITH GROUNDWATER OR BENEATH STRUCTURES (MANHOLES, INLET BOXES).

INSPECTIONS AND TESTING:

1. THE DISTRICT AND THE CITY OF JARRELL SHALL INSPECT AND APPROVE OF THE WORKMANSHIP AND MATERIALS UTILIZED OR INVOLVED IN THE CONSTRUCTION OF THE WATER, WASTEWATER, AND DRAINAGE FACILITIES, WHICH MAY INCLUDE THE FOLLOWING:
   A. ALL MATERIALS USED IN THE WORK;
   B. THE COMPLETED TRENCH FOR EACH SECTION OF WORK;
   C. PIPE AND TUBING AFTER UNDER-BEDDING INSTALLATION, OVER BEDDING, AND LAYING OF DETECTABLE TRACER TAPE AS REQUIRED;
   D. FITTINGS, FIXTURES, AND APPURTENANCES AFTER INSTALLATION AND THRUST BLOCKING, IF REQUIRED, BUT BEFORE BEDDING OR BACKFILL IS PLACED;
   E. ALL REQUIRED PRESSURE, VACUUM, AND MATERIALS TESTING; AND,
   F. A FINAL INSPECTION.
2. ALL UTILITY INSPECTIONS WILL BE PERFORMED BY THE CITY OF JARRELL. THE DISTRICT'S MAINTENANCE RESPONSIBILITIES ARE LIMITED TO THE STORM SEWER SYSTEM AND THE WATER QUALITY AND DETENTION FACILITIES.
3. ANY CONFLICTS BETWEEN THE CITY OF JARRELL NOTES AND SPECIFICATIONS AND THOSE OF THE DISTRICT SHALL DEFAULT TO THE CITY OF JARRELL STANDARDS.
4. ALL MATERIALS AND WATER QUALITY TESTING WILL BE THE RESPONSIBILITY OF THE CONTRACTOR, AND SHALL BE COORDINATED WITH THE DISTRICT'S REPRESENTATIVE. PASSING REPORTS OF ALL REQUIRED TESTS SHALL BE PROVIDED TO THE DISTRICT PRIOR TO ACCEPTANCE OF THE FACILITIES FOR OPERATION AND MAINTENANCE.

   AT A MINIMUM, THE FOLLOWING TESTS ARE REQUIRED AND SHALL BE CONDUCTED PER TCEQ CHAPTER 217.57 FOR GRAVITY FLOW WASTEWATER COLLECTION SYSTEMS, TCEQ CHAPTER 217.68 FOR WASTEWATER FORCE MAINS, AND APPLICABLE AWWA STANDARDS FOR WATER SYSTEMS:
   - HYDROSTATIC PRESSURE TESTING OF WATER MAINS IN ACCORDANCE WITH AWWA C605 (150 PSI FOR 2-HOURS) FOLLOWING THE INSTALLATION OF ALL ABOVE GROUND APPURTENANCES (METER BOXES, SERVICES, FIRE HYDRANTS, AND FLUSH VALVES) AT FINAL GRADE. THE ALLOWABLE LEAKAGE RATE SHALL NOT EXCEED THE SPECIFIED VALUES IN TABLE 2 BELOW, AND IS DERIVED FROM THE FORMULAS IN AWWA C605. IF THE PIPELINE UNDER TEST CONTAINS SECTIONS OF VARIOUS DIAMETERS AND MULTIPLE CLOSED VALVES, THE TESTING ALLOWANCE WILL BE THE SUM OF THE TESTING ALLOWANCE FOR EACH PIPELINE SIZE AND VALVE.
   - CLEAN, DISINFECT, AND FLUSH THE WATER MAIN AND APPURTENANCES IN ACCORDANCE WITH AWWA C651. PASSING BACTERIOLOGICAL TEST SAMPLES MUST BE DRAWN FROM THE FURTHEST POINT IN THE NEW WATER MAIN FROM THE EXISTING SYSTEM AS WELL AS AT EACH ADDITIONAL 1,000 FOOT INTERVAL ALONG THE PIPELINE ROUTE. THE LABORATORY USED FOR BACTERIOLOGICAL ANALYSIS AND TESTING MUST BE APPROVED BY THE DISTRICT.
   - HYDROSTATIC PRESSURE TESTING OF WASTEWATER FORCE MAINS AT 50 PSI ABOVE THE NORMAL OPERATING PRESSURE FOR A MINIMUM OF 4.0 HOURS. THE LEAKAGE RATE MUST NOT EXCEED 10.0 GALLONS PER INCH DIAMETER PER MILE OF PIPE PER DAY.
   - LOW PRESSURE AIR TEST FOR ALL GRAVITY SEWER MAINS, INDEPENDENTLY OF THE CONNECTING MANHOLES. THE PIPELINE SHOULD FIRST BE FLUSHED AND CLEANED, THEN PRESSURIZED TO 3.5 PSI, STABILIZED, AND THE AIR PUMP TURNED OFF. THE TESTING EQUIPMENT MUST INCLUDE A PRESSURE RELIEF VALVE DESIGNED TO RELIEVE PRESSURE FROM THE PIPELINE AT 10 PSI OR LESS TO AVOID EXCESSIVE PRESSURE. THE MINIMUM TIME REQUIRED FOR A PRESSURE DROP IN THE PIPELINE FROM 3.5 PSI TO 2.5 PSI IS SUMMARIZED IN TABLE 3 BELOW AND DERIVED FROM THE FORMULAS IN TCEQ CHAPTER 217.57 (A)(1).
   - AS AN ALTERNATIVE TO THE LOW PRESSURE AIR TEST, THE DISTRICT ENGINEER OR DESIGNATED REPRESENTATIVE MAY REQUIRE OR ALLOW INFILTRATION OR EXFILTRATION TESTING OF THE GRAVITY SEWER MAINS.
   - DEFLECTION (MANDREL) PULLS TO CHECK FOR EXCESSIVE DEFLECTION IN GRAVITY SEWER MAINS. THE MANDREL SHALL BE PULLED BY HAND AND CONDUCTED AFTER THE FINAL BACKFILL HAS BEEN COMPACTED AND IN PLACE FOR NO LESS THAN 30 DAYS. THE RIGID MANDREL SHALL HAVE AN OUTSIDE DIAMETER EQUAL TO 95% OF THE INSIDE DIAMETER OF THE PIPE.
   - VACUUM TESTING (10-INCHES OF MERCURY FOR 2.0 MINUTES AFTER VACUUM PUMP IS OFF) OF ALL MANHOLES PRIOR TO APPLICATION OF A COATING OR GROUT ON THE HORIZONTAL JOINTS, AND INDEPENDENTLY OF THE CONNECTING PIPELINES. THE VACUUM MUST BE AT LEAST 9.0 INCHES OF MERCURY FOLLOWING THE TEST.
   - COMPACTION TESTS SHALL BE PERFORMED ON ALL PIPELINE TRENCHES AT A MINIMUM OF 500-FOOT INTERVALS AND AT EACH 6-INCH LIFT, OR AS DIRECTED BY THE DISTRICT OR WILLIAMSON COUNTY REPRESENTATIVE. THE CONTRACTOR WILL BE REQUIRED TO MAKE SUITABLE EXCAVATION TO ALLOW ACCESS FOR SUCH TESTING, AND WILL BE REQUIRED TO REMOVE AND REPLACE THE BACKFILL AS MANY TIMES AS NECESSARY TO ACHIEVE MINIMUM 95% DENSITY.
   - COMPRESSIVE STRENGTH AND SLUMP TESTS FOR ALL STRUCTURAL CONCRETE TO MEET DESIGN ENGINEER'S SPECIFICATIONS, AS APPLICABLE.
   - COATING TESTS FOR ALL CONCRETE MANHOLE AND LIFT STATION LININGS TO DEMONSTRATE SPECIFIED THICKNESS, AS APPLICABLE.

Table 1: Min. Trench Widths for HDPE Drainage Pipe

Pipe Diameter (in)	Minimum Trench Width (in)
18	42
24	48
30	56
36	64
42	72

Table 2: Allowable Leakage (gals) for 2-Hrs at 150 PSI

Length (ft)	Diameter (in)				
	6	8	12	16	18
5	0.00	0.01	0.01	0.01	0.01
10	0.01	0.01	0.02	0.03	0.03
15	0.01	0.02	0.03	0.04	0.04
20	0.02	0.03	0.04	0.05	0.06
25	0.02	0.03	0.05	0.07	0.07
50	0.05	0.07	0.10	0.13	0.15
75	0.07	0.10	0.15	0.20	0.22
100	0.10	0.13	0.20	0.26	0.30
200	0.20	0.26	0.40	0.53	0.60
300	0.30	0.40	0.60	0.79	0.89
400	0.40	0.53	0.79	1.06	1.19
500	0.50	0.66	0.99	1.32	1.49
600	0.60	0.79	1.19	1.59	1.79
700	0.70	0.93	1.39	1.85	2.09
800	0.79	1.06	1.59	2.12	2.38
900	0.89	1.19	1.79	2.38	2.68
1000	0.99	1.32	1.99	2.65	2.98
Valve	0.09	0.12	0.19	0.25	0.28

Table 3: Min. Testing Times for Low-Pressure Air Test

Pipe Diameter (in)	Minimum Time (seconds)	Maximum Length for Minimum Time (ft)	Time for Longer Length (seconds/ft)
6	340	398	0.855
8	454	298	1.520
10	567	239	2.374
12	680	199	3.419
15	850	159	5.342
18	1020	133	7.693

NO.	REVISION	DATE

STATE OF TEXAS
JENNIFER C. FRANKLIN
118838
LICENSED PROFESSIONAL ENGINEER
9-25-24

PAPE-DAWSON

Texas Commission on Environmental Quality
Organized Sewage Collection System
General Construction Notes

Edwards Aquifer Protection Program Construction Notes – Legal Disclaimer

The following/listed "construction notes" are intended to be advisory in nature only and do not constitute an approval or conditional approval by the Executive Director, nor do they constitute a comprehensive listing of rules or conditions to be followed during construction. Further actions may be required to achieve compliance with TCEQ regulations found in Title 30, Texas Administrative Code, Chapters 213 and 217, as well as local ordinances and regulations providing for the protection of water quality. Additionally, nothing contained in the following/listed "construction notes" restricts the powers of the Executive Director, the commission or any other governmental entity to prevent, correct, or curtail activities that result or may result in pollution of the Edwards Aquifer or hydrologically connected surface waters. The holder of any Edwards Aquifer Protection Plan containing "construction notes" is still responsible for compliance with Title 30, Texas Administrative Code, Chapters 213 or any other applicable TCEQ regulation, as well as all conditions of an Edwards Aquifer Protection Plan through all phases of plan implementation. Failure to comply with any condition of the Executive Director's approval, whether or not in contradiction of any "construction notes," is a violation of TCEQ regulations and any violation is subject to administrative rules, orders, and penalties as provided under Title 30, Texas Administrative Code § 213.10 (relating to Enforcement). Such violations may also be subject to civil penalties and injunction. The following/listed "construction notes" in no way represent an approved exception by the Executive Director to any part of Title 30 Texas Administrative Code, Chapters 213 and 217, or any other TCEQ applicable regulation.

1. This Organized Sewage Collection System (SCS) must be constructed in accordance with 30 Texas Administrative Code (TAC) §213.5(c), the Texas Commission on Environmental Quality's (TCEQ) Edwards Aquifer Rules and any local government standard specifications.

2. All contractors conducting regulated activities associated with this proposed regulated project must be provided with copies of the SCS plan and the TCEQ letter indicating the specific conditions of its approval. During the course of these regulated activities, the contractors must be required to keep on-site copies of the plan and the approval letter.

3. A written notice of construction must be submitted to the presiding TCEQ regional office at least 48 hours prior to the start of any regulated activities. This notice must include:
   - the name of the approved project;
   - the activity start date; and
   - the contact information of the prime contractor.

4. Any modification to the activities described in the referenced SCS application following the date of approval may require the submittal of an SCS application to modify this approval, including the payment of appropriate fees and all information necessary for its review and approval.

5. Prior to beginning any construction activity, all temporary erosion and sedimentation (E&S) control measures must be properly installed and maintained in accordance with the manufacturers specifications. These controls must remain in place until the disturbed areas have been permanently stabilized.

6. If any sensitive features are discovered during the wastewater line trenching activities, all regulated activities near the sensitive feature must be suspended immediately. The applicant must immediately notify the appropriate regional office of the TCEQ of the feature discovered. A geologist's assessment of the location and extent of the feature discovered must be reported to that regional office in writing and the applicant must submit a plan for ensuring the structural integrity of the sewer line or for modifying the proposed collection system alignment around the feature. The regulated activities near the sensitive feature may not proceed until the

executive director has reviewed and approved the methods proposed to protect the sensitive feature and the Edwards Aquifer from any potentially adverse impacts to water quality while maintaining the structural integrity of the line.

7. Sewer lines located within or crossing the 5-year floodplain of a drainage way will be protected from inundation and stream velocities which could cause erosion and scouring of backfill. The trench must be capped with concrete to prevent scouring of backfill, or the sewer lines must be encased in concrete. All concrete shall have a minimum thickness of 6 inches.

8. Blasting procedures for protection of existing sewer lines and other utilities will be in accordance with the National Fire Protection Association criteria. Sand is not allowed as bedding or backfill in trenches that have been blasted. If any existing sewer lines are damaged, the lines must be repaired and retested.

9. All manholes constructed or rehabilitated on this project must have watertight size on size resilient connectors allowing for differential settlement. If manholes are constructed within the 100-year floodplain, the cover must have a gasket and be bolted to the ring. Where gasketed manhole covers are required for more than three manholes in sequence or for more than 1500 feet, alternate means of venting will be provided. Bricks are not an acceptable construction material for any portion of the manhole.

   The diameter of the manholes must be a minimum of four feet and the manhole for entry must have a minimum clear opening diameter of 30 inches. These dimensions and other details showing compliance with the commission's rules concerning manholes and sewer line/manhole inverts described in 30 TAC §217.55 are included on Plan Sheet __ of __.

   It is suggested that entrance into manholes in excess of four feet deep be accomplished by means of a portable ladder. The inclusion of steps in a manhole is prohibited.

10. Where water lines and new sewer line are installed with a separation distance closer than nine feet (i.e., water lines crossing wastewater lines, water lines paralleling wastewater lines, or water lines next to manholes) the installation must meet the requirements of 30 TAC §217.53(d) (Pipe Design) and 30 TAC §290.44(e) (Water Distribution).

11. Where sewers lines deviate from straight alignment and uniform grade all curvature of sewer pipe must be achieved by the following procedure which is recommended by the pipe manufacturer: _____.

    If pipe flexure is proposed, the following method of preventing deflection of the joint must be used: _____.

    Specific care must be taken to ensure that the joint is placed in the center of the trench and properly bedded in accordance with 30 TAC §217.54.

12. New sewage collection system lines must be constructed with stub outs for the connection of anticipated extensions. The location of such stub outs must be marked on the ground such that their location can be easily determined at the time of connection of the extensions. Such stub outs must be manufactured wyes or tees that are compatible in size and material with both the sewer line and the extension. At the time of original construction, new stub-outs must be constructed sufficiently to extend beyond the end of the street pavement. All stub-outs must be sealed with a manufactured cap to prevent leakage. Extensions that were not anticipated at the time of original construction or that are to be connected to an existing sewer line not furnished with stub outs must be connected using a manufactured saddle and in accordance with accepted plumbing techniques.

    If no stub-out is present an alternate method of joining laterals is shown in the detail on Plan Sheet __ of __. (For potential future laterals).

    The private service lateral stub-outs must be installed as shown on the plan and profile sheets on Plan Sheet __ of __ and marked after backfilling as shown in the detail on Plan Sheet __ of __.

13. Trenching, bedding and backfill must conform with 30 TAC §217.54. The bedding and backfill for flexible pipe must comply with the standards of ASTM D-2321, Classes IA, IB, II or III. Rigid pipe bedding must comply with the requirements of ASTM C 12 (ANSI A 106.2) classes A, B or C.

14. Sewer lines must be tested from manhole to manhole. When a new sewer line is connected to an existing stub or clean-out, it must be tested from existing manhole to new manhole. If a stub or clean-out is used at the end of the proposed sewer line, no private service attachments may be connected between the last manhole and the cleanout unless it can be certified as conforming with the provisions of 30 TAC §213.5(c)(3)(E).

15. All sewer lines must be tested in accordance with 30 TAC §217.57. The engineer must retain copies of all test results which must be made available to the executive director upon request. The engineer must certify in writing that all wastewater lines have passed all required testing to the appropriate regional office within 30 days of test completion and prior to use of the new collection system. Testing method will be:
    (a) For a collection system pipe that will transport wastewater by gravity flow, the design must specify an infiltration and exfiltration test or a low-pressure air test. A test must conform to the following requirements:
        (1) *Low Pressure Air Test.*
            (A) A low pressure air test must follow the procedures described in American Society For Testing And Materials (ASTM) C-828, ASTM C-924, or ASTM F-1417 or other procedure approved by the executive director, except as to testing times as required in Table C.3 in subparagraph (C) of this paragraph or Equation C.3 in subparagraph (B)(ii) of this paragraph.
            (B) For sections of collection system pipe less than 36 inch average inside diameter, the following procedure must apply, unless a pipe is to be tested as required by paragraph (2) of this subsection.
                (i) A pipe must be pressurized to 3.5 pounds per square inch (psi) greater than the pressure exerted by groundwater above the pipe.
                (ii) Once the pressure is stabilized, the minimum time allowable for the pressure to drop from 3.5 psi gauge to 2.5 psi gauge is computed from the following equation:

Equation C.3 $$T = \frac{0.085 \times D \times K}{Q}$$

Where:

T = time for pressure to drop 1.0 pound per square inch gauge in seconds
K = 0.000419 X D X L, but not less than 1.0
D = average inside pipe diameter in inches

L = length of line of same size being tested, in feet
Q = rate of loss, 0.0015 cubic feet per minute per square foot internal surface

(C) Since a K value of less than 1.0 may not be used, the minimum testing time for each pipe diameter is shown in the following Table C.3:

Pipe Diameter *(inches)*	Minimum Time *(seconds)*	Maximum Length for Minimum Time *(feet)*	Time for Longer Length *(seconds/foot)*
6	340	398	0.855
8	454	298	1.520
10	567	239	2.374
12	680	199	3.419
15	850	159	5.342
18	1020	133	7.693
21	1190	114	10.471
24	1360	100	13.676
27	1530	88	17.309
30	1700	80	21.369
33	1870	72	25.856

(D) An owner may stop a test if no pressure loss has occurred during the first 25% of the calculated testing time.
(E) If any pressure loss or leakage has occurred during the first 25% of a testing period, then the test must continue for the entire test duration as outlined above or until failure.
(F) Wastewater collection system pipes with a 27 inch or larger average inside diameter may be air tested at each joint instead of following the procedure outlined in this section.
(G) A testing procedure for pipe with an inside diameter greater than 33 inches must be approved by the executive director.

(2) *Infiltration/Exfiltration Test.*
(A) The total exfiltration, as determined by a hydrostatic head test, must not exceed 50 gallons per inch of diameter per mile of pipe per 24 hours at a minimum test head of 2.0 feet above the crown of a pipe at an upstream manhole.
(B) An owner shall use an infiltration test in lieu of an exfiltration test when pipes are installed below the groundwater level.
(C) The total exfiltration, as determined by a hydrostatic head test, must not exceed 50 gallons per inch diameter per mile of pipe per 24 hours at a minimum test head of two feet above the crown of a pipe at an upstream manhole, or at least two feet above existing groundwater level, whichever is greater.
(D) For construction within a 25-year flood plain, the infiltration or exfiltration must not exceed 10 gallons per inch diameter per mile of pipe per 24 hours at the same minimum test head as in subparagraph (C) of this paragraph.
(E) If the quantity of infiltration or exfiltration exceeds the maximum quantity specified, an owner shall undertake remedial action in order to reduce

the infiltration or exfiltration to an amount within the limits specified. An owner shall retest a pipe following a remediation action.

(b) If a gravity collection pipe is composed of flexible pipe, deflection testing is also required. The following procedures must be followed:
(1) For a collection pipe with inside diameter less than 27 inches, deflection measurement requires a rigid mandrel.
(A) *Mandrel Sizing.*
(i) A rigid mandrel must have an outside diameter (OD) not less than 95% of the base inside diameter (ID) or average ID of a pipe, as specified in the appropriate standard by the ASTMs, American Water Works Association, UNI-BELL, or American National Standards Institute, or any related appendix.
(ii) If a mandrel sizing diameter is not specified in the appropriate standard, the mandrel must have an OD equal to 95% of the ID of a pipe. In this case, the ID of the pipe, for the purpose of determining the OD of the mandrel, must equal be the average outside diameter minus two minimum wall thicknesses for OD controlled pipe and the average inside diameter for ID controlled pipe.
(iii) All dimensions must meet the appropriate standard.
(B) *Mandrel Design.*
(i) A rigid mandrel must be constructed of a metal or a rigid plastic material that can withstand 200 psi without being deformed.
(ii) A mandrel must have nine or more odd number of runners or legs.
(iii) A barrel section length must equal at least 75% of the inside diameter of a pipe.
(iv) Each size mandrel must use a separate proving ring.
(C) *Method Options.*
(i) An adjustable or flexible mandrel is prohibited.
(ii) A test may not use television inspection as a substitute for a deflection test.
(iii) If requested, the executive director may approve the use of a deflectometer or a mandrel with removable legs or runners on a case-by-case basis.
(2) For a gravity collection system pipe with an inside diameter 27 inches and greater, other test methods may be used to determine vertical deflection.
(3) A deflection test method must be accurate to within plus or minus 0.2% deflection.
(4) An owner shall not conduct a deflection test until at least 30 days after the final backfill.
(5) Gravity collection system pipe deflection must not exceed five percent (5%).
(6) If a pipe section fails a deflection test, an owner shall correct the problem and conduct a second test after the final backfill has been in place at least 30 days.

16. All manholes must be tested to meet or exceed the requirements of 30 TAC §217.58.
(a) All manholes must pass a leakage test.
(b) An owner shall test each manhole (after assembly and backfilling) for leakage, separate and independent of the collection system pipes, by hydrostatic exfiltration testing, vacuum testing, or other method approved by the executive director.
(1) Hydrostatic Testing.

(A) The maximum leakage for hydrostatic testing or any alternative test methods is 0.025 gallons per foot diameter per foot of manhole depth per hour.
(B) To perform a hydrostatic exfiltration test, an owner shall seal all wastewater pipes coming into a manhole with an internal pipe plug, fill the manhole with water, and maintain the test for at least one hour.
(C) A test for concrete manholes may use a 24-hour wetting period before testing to allow saturation of the concrete.
(2) Vacuum Testing.
(A) To perform a vacuum test, an owner shall plug all lift holes and exterior joints with a non-shrink grout and plug all pipes entering a manhole.
(B) No grout must be placed in horizontal joints before testing.
(C) Stub-outs, manhole boots, and pipe plugs must be secured to prevent movement while a vacuum is drawn.
(D) An owner shall use a minimum 60 inch/lb torque wrench to tighten the external clamps that secure a test cover to the top of a manhole.
(E) A test head must be placed at the inside of the top of a cone section, and the seal inflated in accordance with the manufacturer's recommendations.
(F) There must be a vacuum of 10 inches of mercury inside a manhole to perform a valid test.
(G) A test does not begin until after the vacuum pump is off.
(H) A manhole passes the test if after 2.0 minutes and with all valves closed, the vacuum is at least 9.0 inches of mercury.

17. All private service laterals must be inspected and certified in accordance with 30 TAC §213.5(c)(3)(I). After installation of and, prior to covering and connecting a private service lateral to an existing organized sewage collection system, a Texas Licensed Professional Engineer, Texas Registered Sanitarian, or appropriate city inspector must visually inspect the private service lateral and the connection to the sewage collection system, and certify that it is constructed in conformity with the applicable provisions of this section. The owner of the collection system must maintain such certifications for five years and forward copies to the appropriate regional office upon request. Connections may only be made to an approved sewage collection system.

Austin Regional Office 12100 Park 35 Circle, Building A Austin, Texas 78753-1808 Phone (512) 339-2929 Fax (512) 339-3795	San Antonio Regional Office 14250 Judson Road San Antonio, Texas 78233-4480 Phone (210) 490-3096 Fax (210) 545-4329

THESE GENERAL CONSTRUCTION NOTES MUST BE INCLUDED ON THE CONSTRUCTION PLANS PROVIDED TO THE CONTRACTOR AND ALL SUBCONTRACTORS.

Texas Commission on Environmental Quality
Water Pollution Abatement Plan
General Construction Notes

Edwards Aquifer Protection Program Construction Notes – Legal Disclaimer

The following/listed "construction notes" are intended to be advisory in nature only and do not constitute an approval or conditional approval by the Executive Director (ED), nor do they constitute a comprehensive listing of rules or conditions to be followed during construction. Further actions may be required to achieve compliance with TCEQ regulations found in Title 30, Texas Administrative Code (TAC), Chapters 213 and 217, as well as local ordinances and regulations providing for the protection of water quality. Additionally, nothing contained in the following/listed "construction notes" restricts the powers of the ED, the commission or any other governmental entity to prevent, correct, or curtail activities that result or may result in pollution of the Edwards Aquifer or hydrologically connected surface waters. The holder of any Edwards Aquifer Protection Plan containing "construction notes" is still responsible for compliance with Title 30, TAC, Chapters 213 or any other applicable TCEQ regulation, as well as all conditions of an Edwards Aquifer Protection Plan through all phases of plan implementation. Failure to comply with any condition of the ED's approval, whether or not in contradiction of any "construction notes," is a violation of TCEQ regulations and any violation is subject to administrative rules, orders, and penalties as provided under Title 30, TAC § 213.10 (relating to Enforcement). Such violations may also be subject to civil penalties and injunction. The following/listed "construction notes" in no way represent an approved exception by the ED to any part of Title 30 TAC, Chapters 213 and 217, or any other TCEQ applicable regulation

1. A written notice of construction must be submitted to the TCEQ regional office at least 48 hours prior to the start of any regulated activities. This notice must include:
   - the name of the approved project;
   - the activity start date; and
   - the contact information of the prime contractor.

2. All contractors conducting regulated activities associated with this project must be provided with complete copies of the approved Water Pollution Abatement Plan (WPAP) and the TCEQ letter indicating the specific conditions of its approval. During the course of these regulated activities, the contractors are required to keep on-site copies of the approved plan and approval letter.

3. If any sensitive feature(s) (caves, solution cavity, sink hole, etc.) is discovered during construction, all regulated activities near the sensitive feature must be suspended immediately. The appropriate TCEQ regional office must be immediately notified of any sensitive features encountered during construction. Construction activities may not be resumed until the TCEQ has reviewed and approved the appropriate protective measures in order to protect any sensitive feature and the Edwards Aquifer from potentially adverse impacts to water quality.

4. No temporary or permanent hazardous substance storage tank shall be installed within 150 feet of a water supply source, distribution system, well, or sensitive feature.

5. Prior to beginning any construction activity, all temporary erosion and sedimentation (E&S) control measures must be properly installed and maintained in accordance with the approved plans and manufacturers specifications. If inspections indicate a control has been used inappropriately, or incorrectly, the applicant must replace or modify the control for site situations. These controls must remain in place until the disturbed areas have been permanently stabilized.

6. Any sediment that escapes the construction site must be collected and properly disposed of before the next rain event to ensure it is not washed into surface streams, sensitive features, etc.

7. Sediment must be removed from the sediment traps or sedimentation basins not later than

when it occupies 50% of the basin's design capacity.

8. Litter, construction debris, and construction chemicals exposed to stormwater shall be prevented from being discharged offsite.

9. All spoils (excavated material) generated from the project site must be stored on-site with proper E&S controls. For storage or disposal of spoils at another site on the Edwards Aquifer Recharge Zone, the owner of the site must receive approval of a water pollution abatement plan for the placement of fill material or mass grading prior to the placement of spoils at the other site.

10. If portions of the site will have a temporary or permanent cease in construction activity lasting longer than 14 days, soil stabilization in those areas shall be initiated as soon as possible prior to the 14th day of inactivity. If activity will resume prior to the 21st day, stabilization measures are not required. If drought conditions or inclement weather prevent action by the 14th day, stabilization measures shall be initiated as soon as possible.

11. The following records shall be maintained and made available to the TCEQ upon request:
    - the dates when major grading activities occur;
    - the dates when construction activities temporarily or permanently cease on a portion of the site; and
    - the dates when stabilization measures are initiated.

12. The holder of any approved Edward Aquifer protection plan must notify the appropriate regional office in writing and obtain approval from the executive director prior to initiating any of the following:

    A. any physical or operational modification of any water pollution abatement structure(s), including but not limited to ponds, dams, berms, sewage treatment plants, and diversionary structures;

    B. any change in the nature or character of the regulated activity from that which was originally approved or a change which would significantly impact the ability of the plan to prevent pollution of the Edwards Aquifer;

    C. any development of land previously identified as undeveloped in the original water pollution abatement plan.

Austin Regional Office 12100 Park 35 Circle, Building A Austin, Texas 78753-1808 Phone (512) 339-2929 Fax (512) 339-3795	San Antonio Regional Office 14250 Judson Road San Antonio, Texas 78233-4480 Phone (210) 490-3096 Fax (210) 545-4329

THESE GENERAL CONSTRUCTION NOTES MUST BE INCLUDED ON THE CONSTRUCTION PLANS PROVIDED TO THE CONTRACTOR AND ALL SUBCONTRACTORS.

NO. | REVISION | DATE

STATE OF TEXAS
JENNIFER C. FRANKLIN
116838
LICENSED
PROFESSIONAL ENGINEER
9-25-24

PAPE-DAWSON ENGINEERS
AUSTIN | SAN ANTONIO | HOUSTON | FORT WORTH | DALLAS
10801 N MOPAC EXPY, BLDG 3, STE 200 | AUSTIN, TX 78759 | 512.454.8711
TBPE FIRM REGISTRATION #470 | TBPLS FIRM REGISTRATION #10028801

RANCHO DEL CIELO - PHASE 4B
WILLIAMSON COUNTY, TEXAS
CONSTRUCTION NOTES 3 OF 3

CITY JOB No.
JOB NO. 51118-61
DATE SEPTEMBER 2024
DESIGNER TS
CHECKED DRAWN CE/JM
SHEET 7 OF 36

Date: Sep 24, 2024, 3:56pm User ID: tstephens
File: H:\Projects\5111\61\60_Phase 5\301 Construction Documents\Civil\CN51118-61.dwg

THIS DOCUMENT HAS BEEN PRODUCED FROM MATERIAL THAT WAS STORED AND/OR TRANSMITTED ELECTRONICALLY AND MAY HAVE BEEN INADVERTENTLY ALTERED. RELY ONLY ON FINAL HARDCOPY MATERIALS BEARING THE CONSULTANT'S ORIGINAL SIGNATURE AND SEAL.

SCALE: 1"= 40'

0' 40' 80' 120'

LEGEND

PROPOSED EASEMENT

DISTRICT BOUNDARY

NOTES

1. UPON PROJECT FINAL ACCEPTANCE, OFFSITE WATER AND WASTEWATER EASEMENTS TO BE CONVEYED TO THE CITY OF JARRELL AND DRAINAGE EASEMENTS TO BE CONVEYED TO THE RANCHO DEL CIELO MUNICIPAL UTILITY DISTRICT.

NO.	REVISION	DATE

STATE OF TEXAS
JENNIFER C. FRANKLIN
118838
LICENSED PROFESSIONAL ENGINEER
9-25-24

PAPE-DAWSON ENGINEERS
AUSTIN I SAN ANTONIO I HOUSTON I FORT WORTH I DALLAS
10801 N MOPAC EXPY, BLDG 3, STE 200 I AUSTIN, TX 78759 I 512.454.8711
TBPE FIRM REGISTRATION #470 I TBPLS FIRM REGISTRATION #10028801

RANCHO DEL CIELO - PHASE 4B

WILLIAMSON COUNTY, TEXAS

RANCHO DEL CIELO MUD EASEMENT & PROPERTY REVIEW 1 OF 2

CITY JOB No. _____
JOB NO. 51118-61
DATE SEPTEMBER 2024
DESIGNER TS
CHECKED _____ DRAWN CE/JM
SHEET 8 OF 36

Date: Sep 24, 2024, 3:56pm User ID: tstephens
File: H:\Projects\51118\60\Phase 5\301 Construction Documents\Civil\DPS1118-61.dwg

THIS DOCUMENT HAS BEEN PRODUCED FROM MATERIAL THAT WAS STORED AND/OR TRANSMITTED ELECTRONICALLY AND MAY HAVE BEEN INADVERTENTLY ALTERED. RELY ONLY ON FINAL HARDCOPY MATERIALS BEARING THE CONSULTANT'S ORIGINAL SIGNATURE AND SEAL.

SCALE: 1"= 40'

0' 40' 80' 120'

LEGEND

PROPOSED EASEMENT

DISTRICT BOUNDARY

NOTES

1. UPON PROJECT FINAL ACCEPTANCE, OFFSITE WATER AND WASTEWATER EASEMENTS TO BE CONVEYED TO THE CITY OF JARRELL AND DRAINAGE EASEMENTS TO BE CONVEYED TO THE RANCHO DEL CIELO MUNICIPAL UTILITY DISTRICT.

NO.	REVISION	DATE

STATE OF TEXAS
JENNIFER C. FRANKLIN
118838
LICENSED
PROFESSIONAL ENGINEER
9-25-24

PAPE-DAWSON ENGINEERS
AUSTIN | SAN ANTONIO | HOUSTON | FORT WORTH | DALLAS
10801 N MOPAC EXPY, BLDG 3, STE 200 | AUSTIN, TX 78759 | 512.454.8711
TBPE FIRM REGISTRATION #470 | TBPLS FIRM REGISTRATION #10028801

RANCHO DEL CIELO - PHASE 4B
WILLIAMSON COUNTY, TEXAS

RANCHO DEL CIELO MUD EASEMENT
& PROPERTY REVIEW 2 OF 2

CITY JOB No.
JOB NO. 51118-61
DATE SEPTEMBER 2024
DESIGNER TS
CHECKED DRAWN CE/JM
SHEET 9 OF 36

Date: Sep 24, 2024, 3:56pm User ID: stephens
File: H:\Projects\311\18\60_Phase 5\301 Construction Documents\Civil\DP51118-61.dwg
THIS DOCUMENT HAS BEEN PRODUCED FROM MATERIAL THAT WAS STORED AND/OR TRANSMITTED ELECTRONICALLY AND MAY HAVE BEEN INADVERTENTLY ALTERED. RELY ONLY ON FINAL HARDCOPY MATERIALS BEARING THE CONSULTANT'S ORIGINAL SIGNATURE AND SEAL.

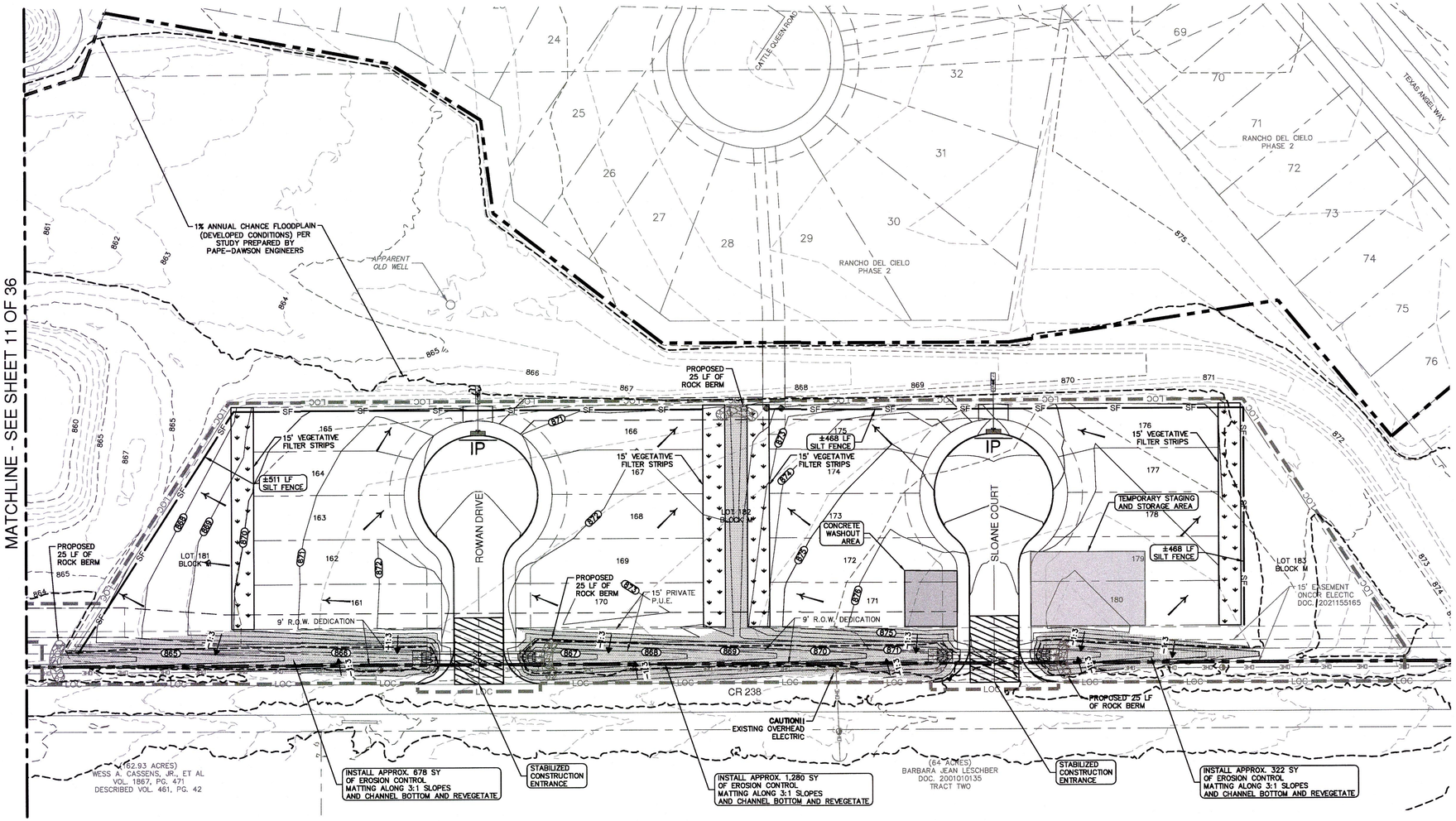

SCALE: 1"= 40'

0' 40' 80' 120'

LEGEND

- LOC — LIMITS OF CONSTRUCTION
- SF — SILT FENCE
- SF — SILT FENCE WITH J-HOOK
- STABILIZED CONSTRUCTION ENTRANCE
- VEGETATIVE FILTER STRIP
- ROCK BERM
- EROSION CONTROL MATTING
- IP — INLET PROTECTION
- FLOW ARROW
- 786 — EXISTING CONTOUR LINE
- 786 — PROPOSED CONTOUR LINE
- 1% ANNUAL CHANCE FLOODPLAIN (DEVELOPED CONDITIONS) PER STUDY PREPARED BY PAPE-DAWSON ENGINEERS

NOTES

1. REFER TO DISTRICT GENERAL NOTE #10 ON SHEET 6 REGARDING REVEGETATION OF DISTURBED AREAS, TOP SOIL, AND TEMPORARY EROSION CONTROL MATTING REQUIREMENTS FOR ALL 4:1 OR STEEPER SLOPES AND CHANNEL FLOWLINES.
2. FROM SHEET 5, STREET AND DRAINAGE NOTE #10, ANY FILL TO BE PLACED IN EXCESS OF 8 INCHES DEEP SHALL BE PLACED IN CONFORMANCE WITH THE REQUIREMENTS OF FHA/HUD DATA SHEET 79G. A LETTER OF CERTIFICATION FROM A QUALIFIED GEOTECHNICAL ENGINEER SHALL BE PRESENTED UPON COMPLETION OF FILLING ACTIVITIES.

NO.	REVISION	DATE

STATE OF TEXAS
JENNIFER C. FRANKLIN
118838
LICENSED PROFESSIONAL ENGINEER
9-30-24

PAPE-DAWSON ENGINEERS
AUSTIN | SAN ANTONIO | HOUSTON | FORT WORTH | DALLAS
10801 N MOPAC EXPY, BLDG 3, STE 200 | AUSTIN, TX 78759 | 512.454.8711
TBPE FIRM REGISTRATION #470 | TBPLS FIRM REGISTRATION #10028801

RANCHO DEL CIELO - PHASE 4B
WILLIAMSON COUNTY, TEXAS

EROSION & SEDIMENTATION CONTROL PLAN 1 OF 2

CITY JOB No.
JOB NO. 51118-61
DATE SEPTEMBER 2024
DESIGNER TS
CHECKED DRAWN CE/JM
SHEET 10 OF 36

Date: Sep 30, 2024, 3:55pm User ID: tstephens
File: H:\Projects\51118\60_Phase 3\301 Construction Documents\Civil\EC51118-61.dwg

THIS DOCUMENT HAS BEEN PRODUCED FROM MATERIAL THAT WAS STORED AND/OR TRANSMITTED ELECTRONICALLY AND MAY HAVE BEEN INADVERTENTLY ALTERED. RELY ONLY ON FINAL HARDCOPY MATERIALS BEARING THE CONSULTANT'S ORIGINAL SIGNATURE AND SEAL.

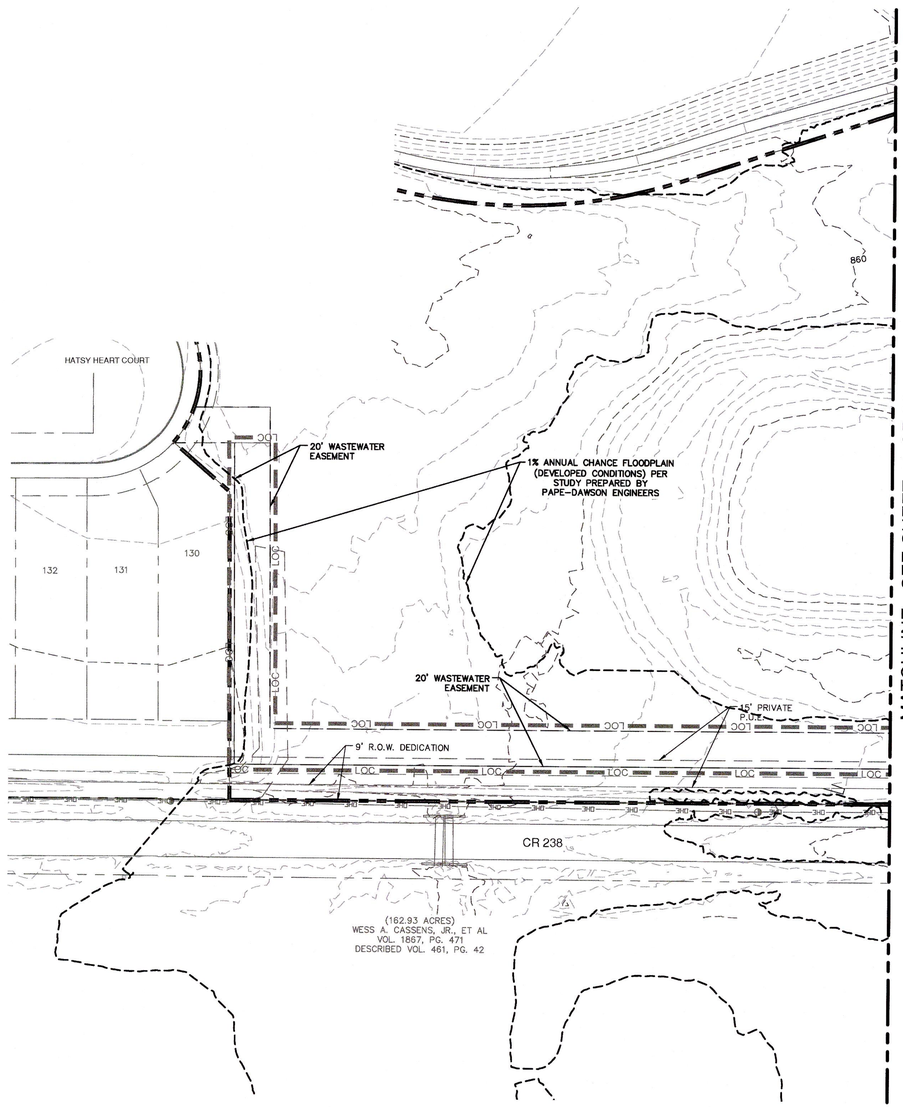

SCALE: 1" = 40'

0' 40' 80' 120'

LEGEND

- LOC — LIMITS OF CONSTRUCTION
- SF — SILT FENCE
- SF — SILT FENCE WITH J-HOOK
- STABILIZED CONSTRUCTION ENTRANCE
- VEGETATIVE FILTER STRIP
- ROCK BERM
- EROSION CONTROL MATTING
- IP — INLET PROTECTION
- FLOW ARROW
- 786 — EXISTING CONTOUR LINE
- PROPOSED CONTOUR LINE
- 1% ANNUAL CHANCE FLOODPLAIN (DEVELOPED CONDITIONS) PER STUDY PREPARED BY PAPE-DAWSON ENGINEERS

NOTES

1. REFER TO DISTRICT GENERAL NOTE #10 ON SHEET 5 REGARDING REVEGETATION OF DISTURBED AREAS, TOP SOIL, AND TEMPORARY EROSION CONTROL MATTING REQUIREMENTS FOR ALL 4:1 OR STEEPER SLOPES AND CHANNEL FLOWLINES.
2. FROM SHEET 5, STREET AND DRAINAGE NOTE #10, ANY FILL TO BE PLACED IN EXCESS OF 8 INCHES DEEP SHALL BE PLACED IN CONFORMANCE WITH THE REQUIREMENTS OF FHA/HUD DATA SHEET 79G. A LETTER OF CERTIFICATION FROM A QUALIFIED GEOTECHNICAL ENGINEER SHALL BE PRESENTED UPON COMPLETION OF FILLING ACTIVITIES.

NO.	REVISION	DATE

STATE OF TEXAS
JENNIFER C. FRANKLIN
118838
LICENSED PROFESSIONAL ENGINEER
9-30-24

PAPE-DAWSON ENGINEERS
AUSTIN | SAN ANTONIO | HOUSTON | FORT WORTH | DALLAS
10801 N MOPAC EXPY, BLDG 3, STE 200 | AUSTIN, TX 78759 | 512.454.8711
TBPE FIRM REGISTRATION #470 | TBPLS FIRM REGISTRATION #100288801

RANCHO DEL CIELO - PHASE 4B
WILLIAMSON COUNTY, TEXAS

EROSION & SEDIMENTATION CONTROL PLAN 2 OF 2

CITY JOB No.
JOB NO. 51118-61
DATE SEPTEMBER 2024
DESIGNER TS
CHECKED DRAWN CE/JM
SHEET 11 OF 36

Date: Sep 30, 2024, 3:55pm User ID: tstephens
File: H:\Projects\51\18\60_Phase 5\301 Construction Documents\Civil\EC51118-61.dwg

THIS DOCUMENT HAS BEEN PRODUCED FROM MATERIAL THAT WAS STORED AND/OR TRANSMITTED ELECTRONICALLY AND MAY HAVE BEEN INADVERTENTLY ALTERED. RELY ONLY ON FINAL HARDCOPY MATERIALS BEARING THE CONSULTANT'S ORIGINAL SIGNATURE AND SEAL.

EXISTING CONDITIONS DRAINAGE STUDY

LEGEND

- SD — STORM DRAIN LINE
- SD — SD MANHOLE
- SD INLET
- DRAINAGE FLOW ARROW
- DRAINAGE AREA BOUNDARY
- EXISTING DRAINAGE AREA
- 786 — PROPOSED CONTOUR LINE
- 786 — EXISTING CONTOUR LINE
- TRAVEL PATH
- DA-X / 3.33 — DRAINAGE AREA DESIGNATION / AREA IN ACRES
- Tc — TIME OF CONCENTRATION

TIME OF CONCENTRATION CALCULATOR - EXISTING CONDITIONS

Drainage Number	Sheet Flow					Shallow Concentrated Flow					Channelized Flow				Total Time (min)	Lag Time (min)
	Length (ft)	Mannings "n"	P_2(in)	Slope (ft/ft)	Time (min)	Length (ft)	P/U	Slope (ft/ft)	Velocity (ft/s)	Time (min)	Length (ft)	Slope (ft/ft)	Velocity (ft/s)	Time (min)		
EX-1	100.0	0.15	3.44	0.020	9.4	3000.0	U	0.023	2.4	20.4	100.0	0.023	4.6	0.4	30.2	18.1
EX-2	100.0	0.15	3.44	0.010	12.5	1500.0	U	0.019	2.2	11.2	1400.0	0.016	3.8	6.1	44.8	26.9
											3600.0	0.011	4.0	15.0		

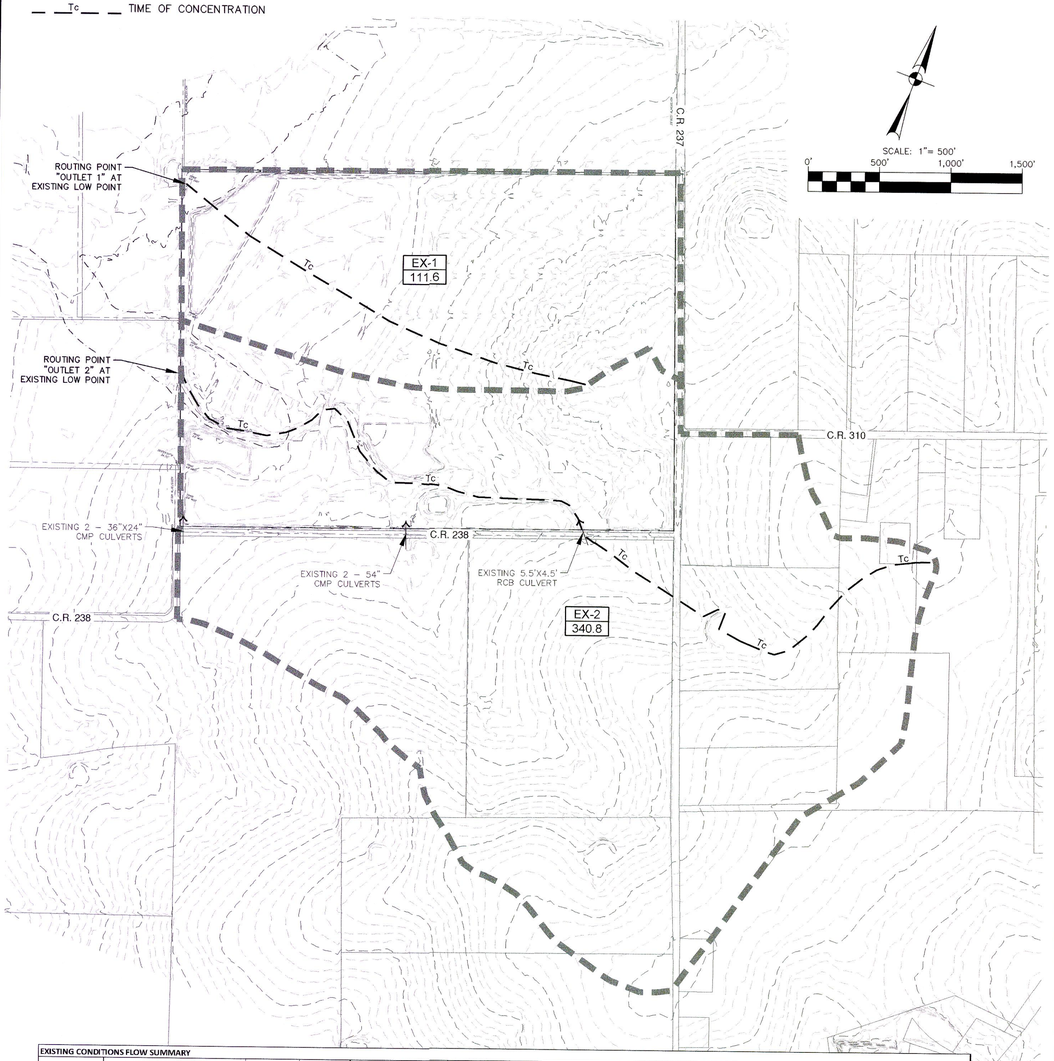

EXISTING CONDITIONS FLOW SUMMARY

Hydrologic Element	Element Description	Downstream Element	Drainage Area (ac)	Composite Curve Number CN	Lag Time (min)	Impervious Cover %	Cumulative Area (ac)	100 YEAR STORM		25 YEAR STORM		10 YEAR STORM		2 YEAR STORM	
								Runoff Per Drainage Area (cfs)	Routed Cumulative Runoff (cfs)	Runoff Per Drainage Area (cfs)	Routed Cumulative Runoff (cfs)	Runoff Per Drainage Area (cfs)	Routed Cumulative Runoff (cfs)	Runoff Per Drainage Area (cfs)	Routed Cumulative Runoff (cfs)
EX-1	Drainage Area EX-1	OUTLET 1	111.6	80	18.1	1.0%		580		403		297		122	
OUTLET 1	**Outlet 1 @ Existing Low Point**						**111.6**		**580**		**403**		**297**		**122**
EX-2	Drainage Area EX-2	OUTLET 2	340.8	80	26.9	2.9%		1476		1029		760		314	
OUTLET 2	**Outlet 2 @ Existing Low Point**						**340.8**		**1476**		**1029**		**760**		**314**

DEVELOPED CONDITIONS DRAINAGE STUDY

NOTES:

1. THE LOCATIONS OF EXISTING UNDERGROUND UTILITIES ARE SHOWN IN AN APPROXIMATE WAY ONLY AND HAVE NOT BEEN INDEPENDENTLY VERIFIED BY THE OWNER OR ITS REPRESENTATIVE. THE CONTRACTOR SHALL DETERMINE THE EXACT LOCATION OF ALL EXISTING UTILITIES BEFORE COMMENCING WORK, AND AGREES TO BE FULLY RESPONSIBLE FOR ANY AND ALL DAMAGES WHICH MIGHT BE ASSOCIATED BY THE CONTRACTOR'S FAILURE TO EXACTLY LOCATE AND PRESERVE ANY AND ALL UNDERGROUND UTILITIES.
2. EXISTING CONTOUR INFORMATION SHOWN IS AT 2 FOOT INTERVALS.
3. DRAINAGE CALCULATIONS ARE IN ACCORDANCE WITH THE 2018 WILLIAMSON COUNTY SUBDIVISION REGULATIONS, EFFECTIVE FOR THE RANCHO DEL CIELO PRELIMINARY PLAT SUBMITTED TO WILLIAMSON COUNTY ON OCTOBER 19, 2018 AND APPROVED AT THE WILLIAMSON COUNTY COMMISSIONERS COURT ON AUGUST 27, 2019.

TIME OF CONCENTRATION CALCULATOR - DEVELOPED CONDITIONS

Drainage Number	Sheet Flow					Shallow Concentrated Flow					Channelized/Pipe Flow				Total Time (min)	Lag Time (min)
	Length (ft)	Manning s "n"	P_2(in)	Slope (ft/ft)	Time (min)	Length (ft)	P/U	Slope (ft/ft)	Velocity (ft/s)	Time (min)	Length (ft)	Slope (ft/ft)	Velocity (ft/s)	Time (min)		
DA-1	100	0.15	3.44	0.011	12.0	130	U	0.013	1.8	1.2	4150	0.015	5.5	12.6	25.8	15.5
OS-1A	100	0.15	3.44	0.010	12.5	100	U	0.010	1.6	1.0	-	-	-	-	13.5	8.1
OS-1B	50	0.15	3.44	0.022	5.2	0	U	0.010	1.6	0.0	1455	0.02	5.7	4.2	9.4	5.6
DA-2A	65	0.15	3.44	0.015	7.5	75	U	0.013	1.8	0.7	1350	0.020	6.0	3.7	11.9	7.1
DA-2B	100	0.15	3.44	0.028	8.3	125	U	0.015	2.0	1.1	2425	0.020	6.0	6.7	16.1	9.7
OS-2	100	0.15	3.44	0.010	12.5	1500	U	0.019	2.2	11.2	1400	0.016	3.8	6.1	44.8	26.9
											3600	0.011	4.0	15.0		

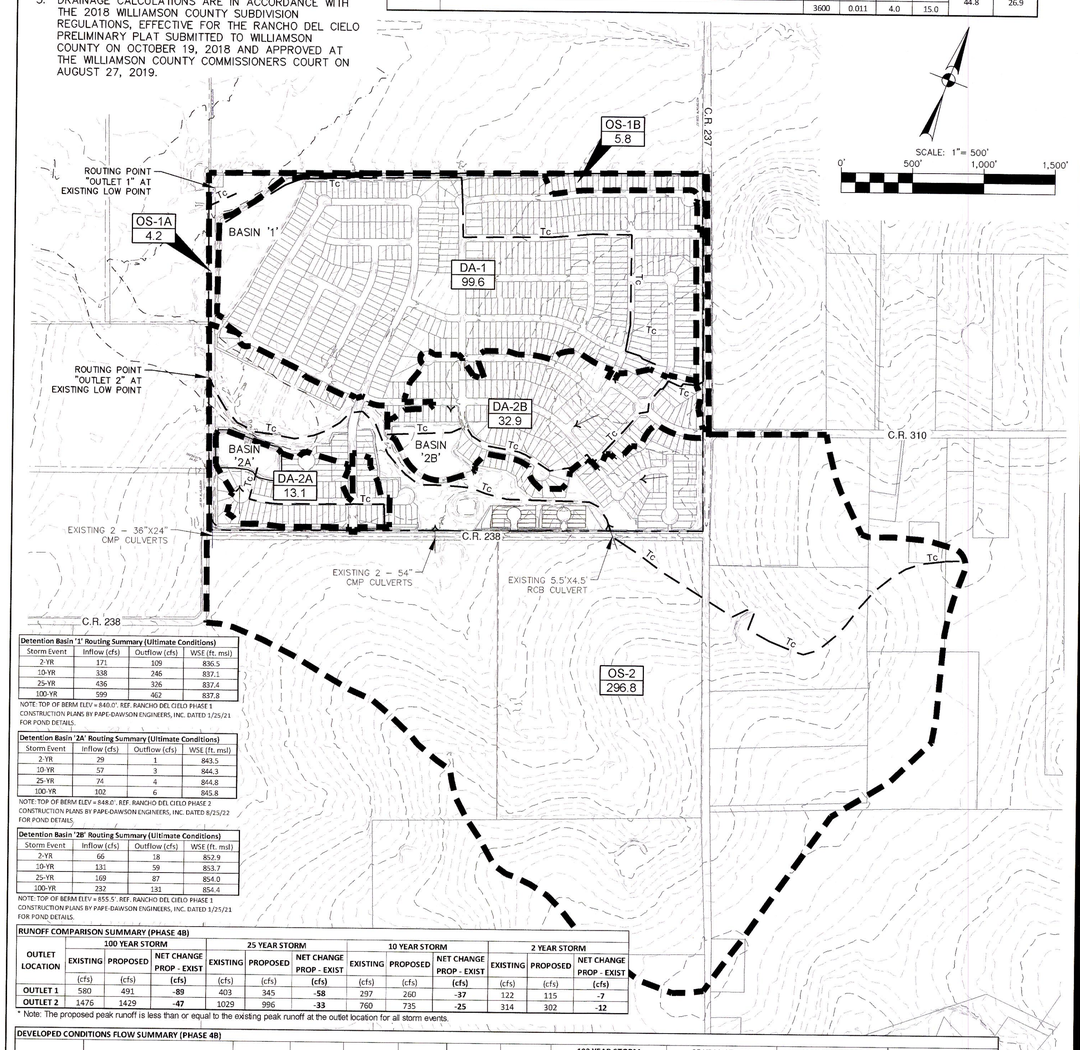

Detention Basin '1' Routing Summary (Ultimate Conditions)

Storm Event	Inflow (cfs)	Outflow (cfs)	WSE (ft. msl)
2-YR	171	109	836.5
10-YR	338	246	837.1
25-YR	436	326	837.4
100-YR	599	462	837.8

NOTE: TOP OF BERM ELEV = 840.0'. REF. RANCHO DEL CIELO PHASE 1 CONSTRUCTION PLANS BY PAPE-DAWSON ENGINEERS, INC. DATED 1/25/21 FOR POND DETAILS.

Detention Basin '2A' Routing Summary (Ultimate Conditions)

Storm Event	Inflow (cfs)	Outflow (cfs)	WSE (ft. msl)
2-YR	29	1	843.5
10-YR	57	3	844.3
25-YR	74	4	844.8
100-YR	102	6	845.8

NOTE: TOP OF BERM ELEV = 848.0'. REF. RANCHO DEL CIELO PHASE 2 CONSTRUCTION PLANS BY PAPE-DAWSON ENGINEERS, INC. DATED 8/25/22 FOR POND DETAILS.

Detention Basin '2B' Routing Summary (Ultimate Conditions)

Storm Event	Inflow (cfs)	Outflow (cfs)	WSE (ft. msl)
2-YR	66	18	852.9
10-YR	131	59	853.7
25-YR	169	87	854.0
100-YR	232	131	854.4

NOTE: TOP OF BERM ELEV = 855.5'. REF. RANCHO DEL CIELO PHASE 1 CONSTRUCTION PLANS BY PAPE-DAWSON ENGINEERS, INC. DATED 1/25/21 FOR POND DETAILS.

RUNOFF COMPARISON SUMMARY (PHASE 4B)

OUTLET LOCATION	100 YEAR STORM			25 YEAR STORM			10 YEAR STORM			2 YEAR STORM		
	EXISTING	PROPOSED	NET CHANGE PROP - EXIST	EXISTING	PROPOSED	NET CHANGE PROP - EXIST	EXISTING	PROPOSED	NET CHANGE PROP - EXIST	EXISTING	PROPOSED	NET CHANGE PROP - EXIST
	(cfs)	(cfs)	(cfs)	(cfs)	(cfs)	(cfs)	(cfs)	(cfs)	(cfs)	(cfs)	(cfs)	(cfs)
OUTLET 1	580	491	**-89**	403	345	**-58**	297	260	**-37**	122	115	**-7**
OUTLET 2	1476	1429	**-47**	1029	996	**-33**	760	735	**-25**	314	302	**-12**

* Note: The proposed peak runoff is less than or equal to the existing peak runoff at the outlet location for all storm events.

DEVELOPED CONDITIONS FLOW SUMMARY (PHASE 4B)

Hydrologic Element	Element Description	Downstream Element	Drainage Area (ac)	Composite Curve Number CN	Lag Time (min)	Impervious Cover %	Cumulative Area (ac)	100 YEAR STORM		25 YEAR STORM		10 YEAR STORM		2 YEAR STORM	
								Runoff Per Drainage Area (cfs)	Routed Cumulative Runoff (cfs)	Runoff Per Drainage Area (cfs)	Routed Cumulative Runoff (cfs)	Runoff Per Drainage Area (cfs)	Routed Cumulative Runoff (cfs)	Runoff Per Drainage Area (cfs)	Routed Cumulative Runoff (cfs)
OS-1A	Drainage Area OS-1A	OUTLET 1	4.2	80	8.1	0.0%		29		20		15		6	
OS-1B	Drainage Area OS-1B	OUTLET 1	6.0	80	5.6	49.0%		48		35		27		13	
DA-1	Drainage Area DA-1	BASIN 1	99.6	80	15.5	56.0%		599		436		338		171	
BASIN 1	Proposed Detention Basin 1	OUTLET 1							462		326		246		109
OUTLET 1	**Outlet 1 @ Existing Low Point**						**109.8**		**491**		**345**		**260**		**115**
OS-2	Drainage Area OS-2	OUTLET 2	296.8	80	26.9	7.5%		1295		906		673		284	
DA-2A	Drainage Area DA-2A	BASIN 2A	13.1	80	7.1	54.0%		102		74		57		29	
BASIN 2A	Proposed Detention Basin 2A	OUTLET 2							6		4		3		1
DA-2B	Drainage Area DA-2B	BASIN 2B	32.7	80	9.7	54.0%		232		169		131		66	
BASIN 2B	Proposed Detention Basin 2B	OUTLET 2							131		87		59		18
OUTLET 2	**Outlet 2 @ Existing Low Point**						**342.6**		**1429**		**996**		**735**		**302**

NO. REVISION | DATE

STATE OF TEXAS
JENNIFER C. FRANKLIN
118838
LICENSED PROFESSIONAL ENGINEER
9/25/24

PAPE-DAWSON ENGINEERS
AUSTIN | SAN ANTONIO | HOUSTON | FORT WORTH | DALLAS
10801 N MOPAC EXPY, BLDG 3, STE. 200 | AUSTIN, TX 78759 | 512.454.8711
TBPE FIRM REGISTRATION #470 | TBPLS FIRM REGISTRATION #10028801

RANCHO DEL CIELO - PHASE 4B
WILLIAMSON COUNTY, TEXAS
OVERALL DRAINAGE STUDY

CITY JOB No.
JOB NO. 51118-61
DATE SEPTEMBER 2024
DESIGNER TS
CHECKED ____ DRAWN CE/JM
SHEET 14 OF 36

Date: Sep 24, 2024, 4:00pm User ID: tstephens
File: H:\Projects\51118-001_Phase 4\301 Construction Documents\Civil\(2051118-61.dwg

THIS DOCUMENT HAS BEEN PRODUCED FROM MATERIAL THAT WAS STORED AND/OR TRANSMITTED ELECTRONICALLY AND MAY HAVE BEEN INADVERTENTLY ALTERED. RELY ONLY ON FINAL HARDCOPY MATERIALS BEARING THE CONSULTANT'S ORIGINAL SIGNATURE AND SEAL.

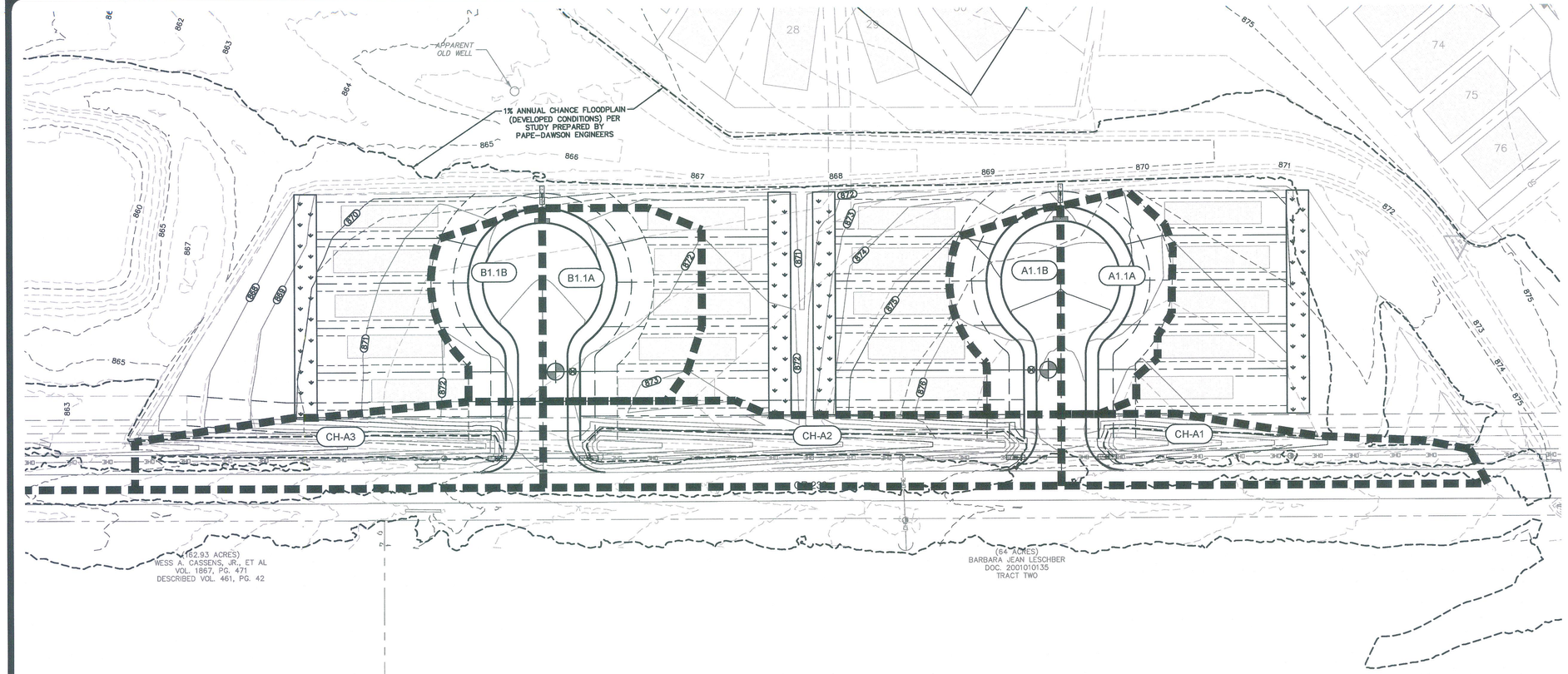

SCALE: 1" = 40'

0' 40' 80' 120'

LEGEND

- SD — STORM DRAIN LINE
- SD — SD MANHOLE
- SD INLET
- DRAINAGE FLOW ARROW
- DRAINAGE AREA BOUNDARY
- XX-X — DRAINAGE AREA
- PROPOSED CONTOUR LINE
- EXISTING CONTOUR LINE
- 1% ANNUAL CHANCE FLOODPLAIN (DEVELOPED CONDITIONS) PER STUDY PREPARED BY PAPE-DAWSON ENGINEERS.

NOTES

1. THE LOCATIONS OF EXISTING UNDERGROUND UTILITIES ARE SHOWN IN AN APPROXIMATE WAY ONLY AND HAVE NOT BEEN INDEPENDENTLY VERIFIED BY THE OWNER OR ITS REPRESENTATIVE. THE CONTRACTOR SHALL DETERMINE THE EXACT LOCATION OF ALL EXISTING UTILITIES BEFORE COMMENCING WORK, AND AGREES TO BE FULLY RESPONSIBLE FOR ANY AND ALL DAMAGES WHICH MIGHT BE ASSOCIATED BY THE CONTRACTOR'S FAILURE TO EXACTLY LOCATE AND PRESERVE ANY AND ALL UNDERGROUND UTILITIES.
2. EXISTING CONTOUR INFORMATION SHOWN IS AT 1 FOOT INTERVALS.

Rancho Del Cielo Phase 4B							10 year					25 year					100 year				
D.A.	AREA	# homes	L. Street	IC	PC	%IC	Pervious		Impervious		Weighted C	Pervious		Impervious		Weighted C	Pervious		Impervious		Weighted C
							C	PC * C	C	IC * C		C	PC * C	C	IC * C		C	PC * C	C	IC * C	
ULTIMATE CONDITION DRAINAGE AREAS																					
A1.1A	0.22	0.0	130	0.13	0.09	56.92%	0.35	0.03	0.82	0.10	0.62	0.39	0.04	0.87	0.11	0.66	0.46	0.04	0.96	0.12	0.74
A1.1B	0.19	0.0	130	0.12	0.07	61.13%	0.35	0.03	0.82	0.10	0.64	0.39	0.03	0.87	0.10	0.68	0.46	0.03	0.96	0.11	0.77
A1.1	0.41	0.0	260	0.24	0.17	58.87%	0.35	0.06	0.82	0.20	0.63	0.39	0.07	0.87	0.21	0.67	0.46	0.08	0.96	0.23	0.75
B1.1A	0.30	2.5	120	0.18	0.12	59.09%	0.35	0.04	0.82	0.15	0.63	0.39	0.05	0.87	0.15	0.67	0.46	0.06	0.96	0.17	0.76
B1.1B	0.18	0.0	120	0.11	0.07	62.35%	0.35	0.02	0.82	0.09	0.64	0.39	0.03	0.87	0.10	0.69	0.46	0.03	0.96	0.11	0.77
B1.1	0.48	2.5	240	0.29	0.19	60.32%	0.35	0.07	0.82	0.24	0.63	0.39	0.07	0.87	0.25	0.68	0.46	0.09	0.96	0.28	0.76
CH-A1	0.25	0.0	286	0.08	0.17	32.61%	0.35	0.06	0.82	0.07	0.50	0.39	0.07	0.87	0.07	0.55	0.46	0.08	0.96	0.08	0.62
CH-A2	0.42	0.0	348	0.12	0.30	28.83%	0.35	0.10	0.82	0.10	0.49	0.39	0.12	0.87	0.11	0.53	0.46	0.14	0.96	0.12	0.60
CH-A3	0.29	0.0	275	0.09	0.20	29.42%	0.35	0.07	0.82	0.07	0.49	0.39	0.08	0.87	0.07	0.53	0.46	0.09	0.96	0.08	0.61

DRAINAGE AREA	INLET NUMBER	AREA (acres)	COMPOSITE C			A·C10	A·C25	A·C100	SHEET FLOW				SHALLOW CONCENTRATED FLOW				CHANNELIZED FLOW					Cumulative	INTENSITY			DISCHARGE		
			C10	C25	C100				Length (ft)	Manning's (n)	Slope ft/ft	Tc (min)	Length (ft)	Paved/ Unpaved	Slope ft/ft	Tc (min)	Length (ft)	Manning's (n)	Slope ft/ft	Velocity ft/s	Tc (min)	Tc (min)	I 10yr (in/hr)	I 25yr (in/hr)	I 100yr (in/hr)	Q 10 (cfs)	Q 25 (cfs)	Q 100 (cfs)
ULTIMATE CONDITION DRAINAGE AREAS																												
A1.1A	A1.1A	0.22	0.62	0.66	0.74	0.14	0.15	0.16	43	0.24	0.031	5.9	0	U	0.010	0.0	90	0.02	0.020	4.1	0.4	6.25	8.1	9.5	11.9	1.1	1.4	2.0
A1.1B	A1.1B	0.19	0.64	0.68	0.77	0.12	0.13	0.15	35	0.24	0.015	6.7	0	U	0.010	0.0	156	0.02	0.012	3.2	0.8	7.49	7.6	9.0	11.4	0.9	1.2	1.7
A1.1	A1.1	0.41	0.63	0.67	0.75	0.26	0.28	0.31	-	-	-	-	-	-	-	-	-	-	-	-	-	7.49	7.6	9.0	11.4	2.0	2.5	3.5
B1.1A	B1.1A	0.30	0.63	0.67	0.76	0.19	0.20	0.23	50	0.24	0.034	6.4	0	U	0.010	0.0	83	0.02	0.017	3.8	0.4	6.76	7.9	9.3	11.7	1.5	1.9	2.6
B1.1B	B1.1B	0.18	0.64	0.69	0.77	0.12	0.12	0.14	35	0.24	0.015	6.7	0	U	0.010	0.0	146	0.02	0.017	3.8	0.6	7.31	7.7	9.1	11.4	0.9	1.1	1.6
B1.1	B1.1	0.48	0.63	0.68	0.76	0.30	0.33	0.37	-	-	-	-	-	-	-	-	-	-	-	-	-	7.31	7.7	9.1	11.4	2.3	3.0	4.2
CH-A1	CH-A1	0.25	0.50	0.55	0.62	0.13	0.14	0.16	10	0.24	0.020	2.2					230	-	-	4.0	1.0	5.00	8.6	10.1	12.5	1.1	1.4	2.0
CH-A2	CH-A2	0.42	0.49	0.53	0.60	0.20	0.22	0.25	10	0.24	0.020	2.2					285			3.0	1.6	5.00	8.6	10.1	12.5	1.7	2.2	3.2
CH-A3	CH-A3	0.29	0.49	0.53	0.61	0.14	0.15	0.18	10	0.24	0.020	2.2					240			4.5	0.9	5.00	8.6	10.1	12.5	1.2	1.6	2.2

PAPE-DAWSON ENGINEERS
AUSTIN | SAN ANTONIO | HOUSTON | FORT WORTH | DALLAS
10801 N MOPAC EXPY., BLDG 3, STE 200 | AUSTIN, TX 78759 | 512.454.8711
TBPE FIRM REGISTRATION #470 | TBPLS FIRM REGISTRATION #10028801

NO. REVISION DATE

STATE OF TEXAS
JENNIFER C. FRANKLIN
118838
LICENSED PROFESSIONAL ENGINEER
9-30-24

RANCHO DEL CIELO - PHASE 4B
WILLIAMSON COUNTY, TEXAS

DRAINAGE AREA MAP

CITY JOB No.
JOB NO. 51118-61
DATE SEPTEMBER 2024
DESIGNER TS
CHECKED DRAWN CE/JM
SHEET 15 OF 36

Date: Sep 30, 2024, 3:55pm User ID: tstephens
File: H:\Projects\511\18\60_Phase 5\301 Construction Documents\Civil\20511118-61.dwg

THIS DOCUMENT HAS BEEN PRODUCED FROM MATERIAL THAT WAS STORED AND/OR TRANSMITTED ELECTRONICALLY AND MAY HAVE BEEN INADVERTENTLY ALTERED. RELY ONLY ON FINAL HARDCOPY MATERIALS BEARING THE CONSULTANT'S ORIGINAL SIGNATURE AND SEAL.

STREET FLOW AND INLET CALCULATIONS
100 YEAR STORM

Inlet No.	Inlet Type	Drainage Area	Q 100 (cfs)	Q pass (cfs)	Q total (cfs)	STREET CAPACITY: Street Width F-F (ft)	Crown Type	Curb Height (ft)	Gutter Slope (%)	a (ft)	Yo (ft)	Crown Height (ft)	INLET ON GRADE CAPACITY: Eo	S'w	Sx	Se	LT	L	E	Qi	Qpass (cfs)	Pass to Inlet #	SUMP INLET CAPACITY: Qtotal (cfs)	CURB (with Depression) Length (ft)	d (ft)	d (ft) (d ≤ h + a)
ULTIMATE CONDITION DRAINAGE AREAS																										
A1.1A		0.22	2.0		2.0	33	P	0.50	1.20%	0.42	0.30	0.50	-	-	-	-	-	-	-	-	-					
A1.1B		0.19	1.7		1.7	33	P	0.50	1.20%	0.42	0.28	0.50	-	-	-	-	-	-	-	-	-					
A1.1	S-1	0.41	3.5		3.5	-	-	-	-	-	-	-	-	-	-	-	-	-	-	-	-		3.5	10	0.24	0.24
B1.1A		0.30	2.6		2.6	33	P	0.50	1.80%	0.42	0.31	0.50	-	-	-	-	-	-	-	-	-					
B1.1B		0.18	1.6		1.6	33	P	0.50	2.55%	0.42	0.24	0.50	-	-	-	-	-	-	-	-	-					
B1.1	S-1	0.48	4.2		4.2	-	-	-	-	-	-	-	-	-	-	-	-	-	-	-	-		4.2	10	0.27	0.27

STREET FLOW AND INLET CALCULATIONS
25 YEAR STORM

Inlet No.	Inlet Type	Drainage Area	Q 25 (cfs)	Q pass (cfs)	Q total (cfs)	STREET CAPACITY: Street Width F-F (ft)	Crown Type	Curb Height (ft)	Gutter Slope (%)	a (ft)	Yo (ft)	Crown Height (ft)	INLET ON GRADE CAPACITY: Eo	S'w	Sx	Se	LT	L	E	Qi	Qpass (cfs)	Pass to Inlet #	SUMP INLET CAPACITY: Qtotal (cfs)	CURB (with Depression) Length (ft)	d (ft)	d (ft) (d ≤ h + a)
ULTIMATE CONDITION DRAINAGE AREAS																										
A1.1A		0.22	1.4		1.4	33	P	0.50	1.20%	0.42	0.27	0.50	-	-	-	-	-	-	-	-	-					
A1.1B		0.19	1.2		1.2	33	P	0.50	1.20%	0.42	0.25	0.50	-	-	-	-	-	-	-	-	-					
A1.1	S-1	0.41	2.5		2.5	-	-	-	-	-	-	-	-	-	-	-	-	-	-	-	-		2.5	10	0.19	0.19
B1.1A		0.30	1.9		1.9	33	P	0.50	1.80%	0.42	0.27	0.50	-	-	-	-	-	-	-	-	-					
B1.1B		0.18	1.1		1.1	33	P	0.50	2.55%	0.42	0.22	0.50	-	-	-	-	-	-	-	-	-					
B1.1	S-1	0.48	3.0		3.0	-	-	-	-	-	-	-	-	-	-	-	-	-	-	-	-		3.0	10	0.22	0.22

STREET FLOW AND INLET CALCULATIONS
10 YEAR STORM

Inlet No.	Inlet Type	Drainage Area	Q 10 (cfs)	Q pass (cfs)	Q total (cfs)	STREET CAPACITY: Street Width F-F (ft)	Crown Type	Curb Height (ft)	Gutter Slope (%)	a (ft)	Yo (ft)	Crown Height (ft)	Ponded Width (ft)	INLET ON GRADE CAPACITY: Eo	S'w	Sx	Se	LT	L	E	Qi	Qpass (cfs)	Pass to Inlet #	SUMP INLET CAPACITY: Qtotal (cfs)	CURB (with Depression) Length (ft)	d (ft)	d (ft) (d ≤ h + a)
ULTIMATE CONDITION DRAINAGE AREAS																											
A1.1A		0.22	1.1		1.1	33	P	0.50	1.20%	0.42	0.25	0.50	4.72	-	-	-	-	-	-	-	-	-					
A1.1B		0.19	0.9		0.9	33	P	0.50	1.20%	0.42	0.23	0.50	4.41	-	-	-	-	-	-	-	-	-					
A1.1	S-1	0.41	2.0		2.0	-	-	-	-	-	-	-	-	-	-	-	-	-	-	-	-	-		2.0	10	0.17	0.17
B1.1A		0.30	1.5		1.5	33	P	0.50	1.80%	0.42	0.25	0.50	4.91	-	-	-	-	-	-	-	-	-					
B1.1B		0.18	0.9		0.9	33	P	0.50	2.55%	0.42	0.20	0.50	3.76	-	-	-	-	-	-	-	-	-					
B1.1	S-1	0.48	2.3		2.3	-	-	-	-	-	-	-	-	-	-	-	-	-	-	-	-	-		2.3	10	0.19	0.19

NO. | REVISION | DATE

STATE OF TEXAS
JENNIFER C. FRANKLIN
116838
LICENSED PROFESSIONAL ENGINEER
9-25-24

PAPE-DAWSON ENGINEERS
AUSTIN | SAN ANTONIO | HOUSTON | FORT WORTH | DALLAS
10801 N MOPAC EXPY, BLDG 3, STE 200 | AUSTIN, TX 78759 | 512.454.8711
TBPE FIRM REGISTRATION #470 | TBPLS FIRM REGISTRATION #10028801

RANCHO DEL CIELO - PHASE 4B
WILLIAMSON COUNTY, TEXAS

DRAINAGE AREA CALCULATIONS

CITY JOB No. _____
JOB NO. 51118-61
DATE SEPTEMBER 2024
DESIGNER TS
CHECKED ____ DRAWN CE/JM
SHEET 16 OF 36

Date: Sep 24, 2024, 4:00pm User ID: tstephens
File: H:\Projects\51118-061_Phase 3\501 Construction Documents\Civil\0051118-61.dwg
THIS DOCUMENT HAS BEEN PRODUCED FROM MATERIAL THAT WAS STORED AND/OR TRANSMITTED ELECTRONICALLY AND MAY HAVE BEEN INADVERTENTLY ALTERED. RELY ONLY ON FINAL HARDCOPY MATERIALS BEARING THE CONSULTANT'S ORIGINAL SIGNATURE AND SEAL.

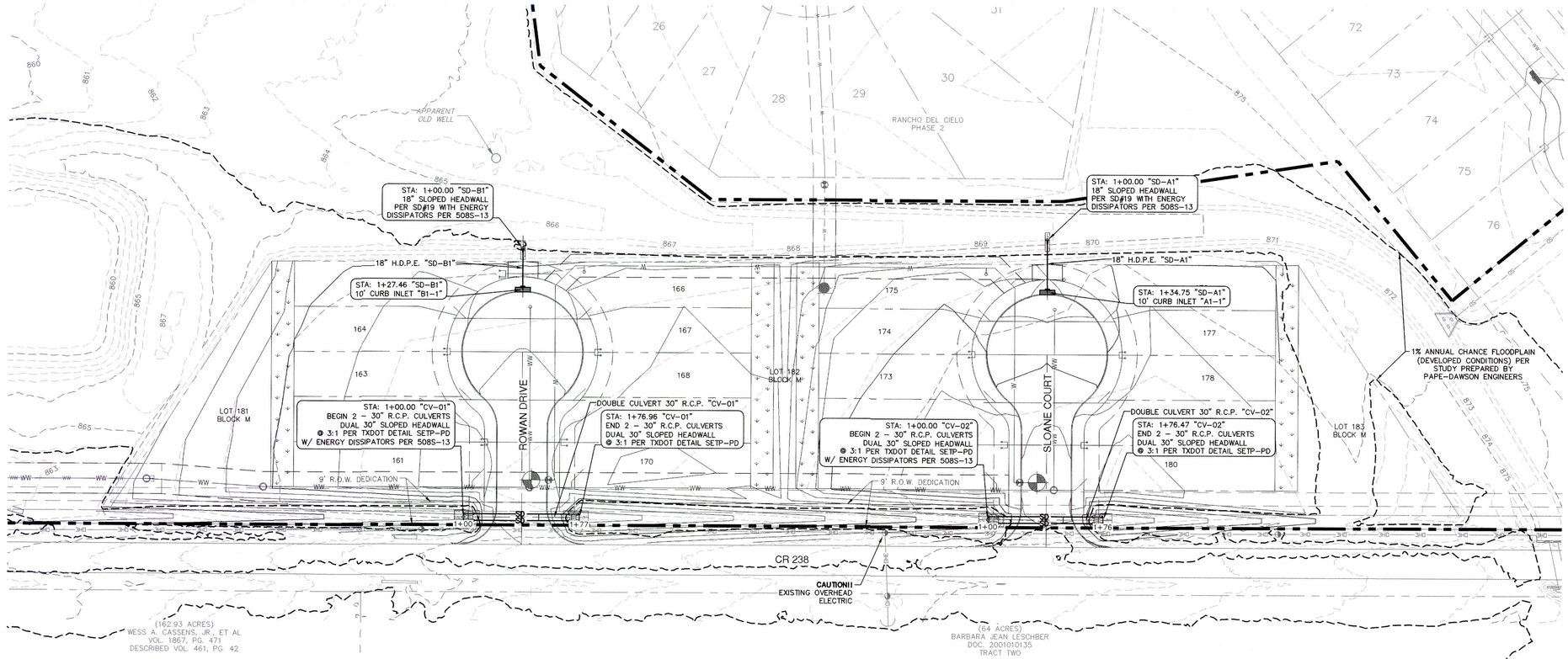

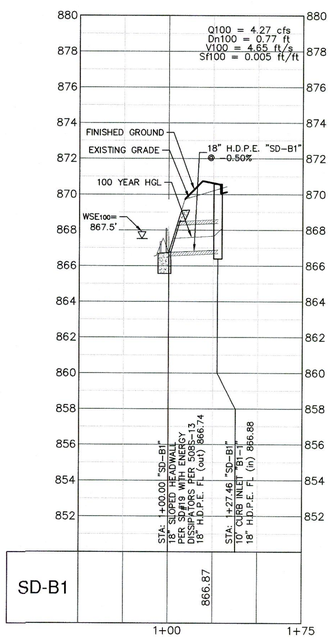

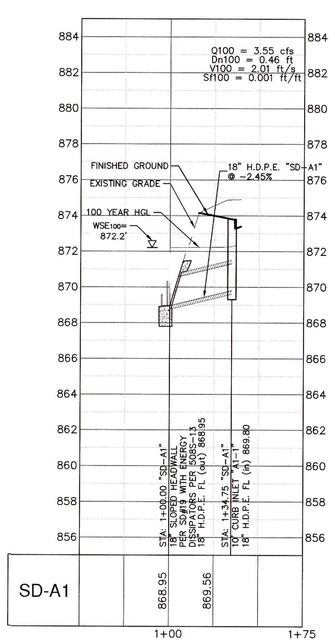

SCALE: 1" = 40'

0' 40' 80' 120'

LEGEND

- WATER LINE
- WASTEWATER LINE & MH
- STORM DRAIN LINE & MH
- CURB INLET
- SINGLE WATER SERVICE
- DOUBLE WATER SERVICE
- SINGLE WW SERVICE
- DOUBLE WW SERVICE
- GATE VALVE
- FIRE HYDRANT
- EXISTING GATE VALVE
- EXISTING FIRE HYDRANT
- EXISTING WATER LINE
- EXISTING WASTEWATER LINE
- EXISTING STORM DRAIN LINE
- EXISTING CONTOUR LINE
- PROPOSED CONTOUR LINE

PROFILE SCALES:

1" = 40' HORIZONTAL
1" = 4' VERTICAL

PROFILE LEGEND:

NATURAL GROUND

FINISHED GRADE

PROPOSED STORM DRAIN

100-YR HGL — 100yr HGL

NO.	REVISION	DATE

STATE OF TEXAS
JENNIFER C. FRANKLIN
116838
LICENSED PROFESSIONAL ENGINEER
9-30-24

PAPE-DAWSON ENGINEERS
AUSTIN | SAN ANTONIO | HOUSTON | FORT WORTH | DALLAS
10801 N. MOPAC EXPY., BLDG. 3, STE. 200 | AUSTIN, TX. 78759 | 512.454.8711
TBPE FIRM REGISTRATION #470 | TBPLS FIRM REGISTRATION #10028801

RANCHO DEL CIELO - PHASE 4B
WILLIAMSON COUNTY, TEXAS

OVERALL STORM DRAIN PLAN

CITY JOB No.
JOB NO. 51118-61
DATE SEPTEMBER 2024
DESIGNER TS
CHECKED DRAWN CE/JM
SHEET 17 OF 36

Date: Sep 30, 2024, 4:19pm User ID: tstephens
File: H:\Projects\51\118\60_Phase 5.3\01 Construction Documents\Civil\SD51118-61.dwg

THIS DOCUMENT HAS BEEN PRODUCED FROM MATERIAL THAT WAS STORED AND/OR TRANSMITTED ELECTRONICALLY AND MAY HAVE BEEN INADVERTENTLY ALTERED. RELY ONLY ON FINAL HARDCOPY MATERIALS BEARING THE CONSULTANT'S ORIGINAL SIGNATURE AND SEAL.

Date: Sep 30, 2024, 3:57pm User ID: tstephens
File: H:\Projects\511\18\60_Phase 5\301 Construction Documents\Civil\CH51118-61.dwg

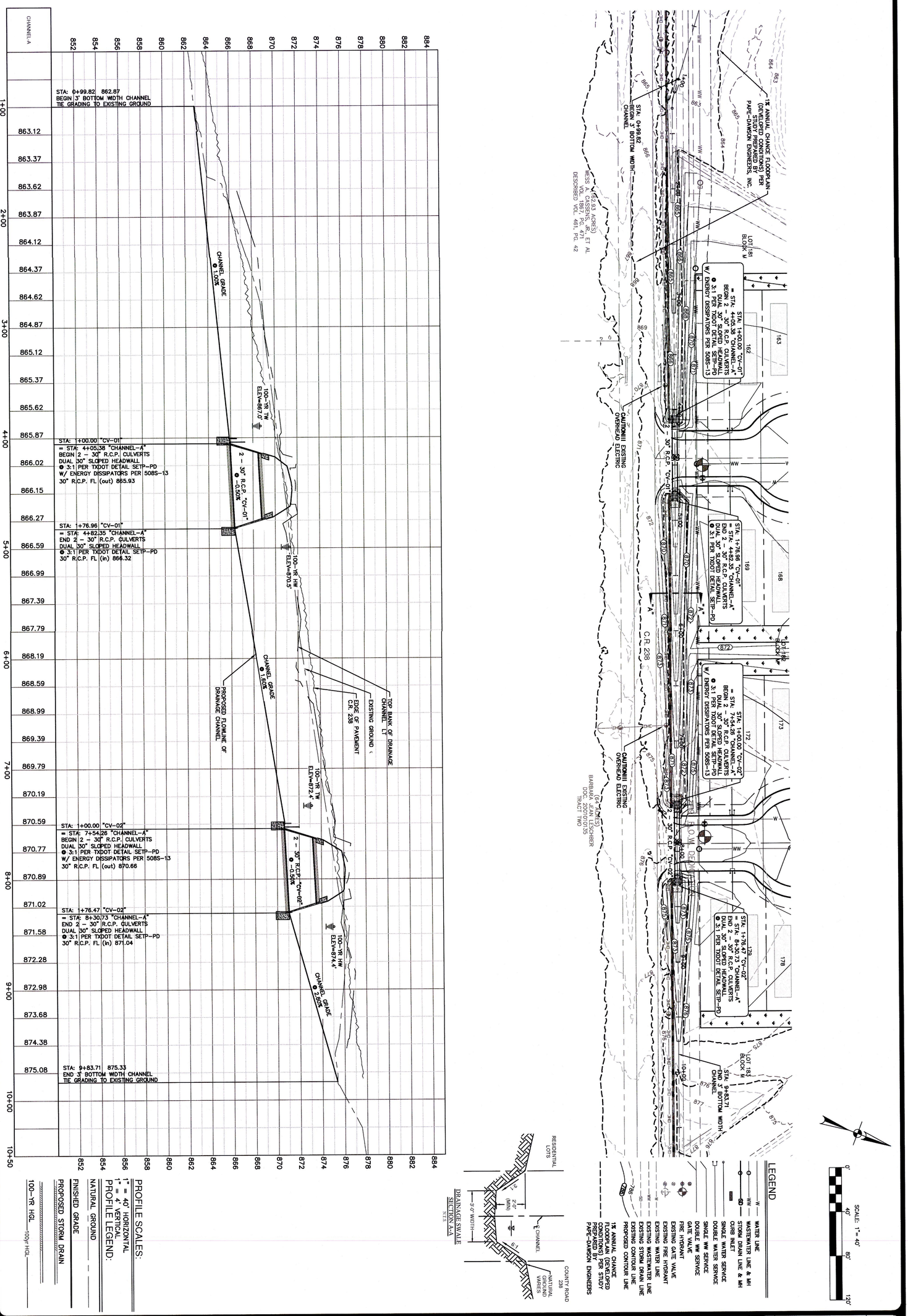

RANCHO DEL CIELO - PHASE 4B
WILLIAMSON COUNTY, TEXAS

CHANNEL A - PLAN AND PROFILE

PAPE-DAWSON ENGINEERS
AUSTIN | SAN ANTONIO | HOUSTON | FORT WORTH | DALLAS
10801 N MOPAC EXPY, BLDG 3, STE 200 | AUSTIN, TX 78759 | 512.454.8711
TBPE FIRM REGISTRATION #470 | TBPLS FIRM REGISTRATION #10028801

JENNIFER C. FRANKLIN 118838 LICENSED PROFESSIONAL ENGINEER STATE OF TEXAS

NO.	REVISION	DATE

CITY JOB No. ____
JOB NO. 51118-61
DATE SEPTEMBER 2024
DESIGNER TS
CHECKED ____ DRAWN CE/JM

SHEET 18 OF 36

Rancho Del Cielo Phase 5 - Water Quality Treatment Summary

EMP Watershed	Total Watershed Area (ac.)	Existing Impervious Cover Pre-Project (ac.)	Existing Impervious Cover Phases 1+2+3+4 (ac.)	Proposed Impervious Cover Phase 5 (ac.)	Total Impervious Cover Phases 1+2+3+4+5 (ac.)	EMP	Phase 5 TSS Removal Required (lb.)	Phase 5 TSS Removal Provided (lb.)	Total TSS Removal Required (lb.)	Total TSS Removal Provided (lb.)
Existing Batch Detention Pond '1'	99.54*	0.00	50.06	0.00	50.06	Existing Batch Detention Pond '1'	0	0	43,572	46,053
Overtreatment provided by Batch Detention Pond '1'	5.52	0.00	2.85	0.00	2.85	Overtreatment provided by Batch Detention Pond '1'	0	-	2,481	-
Existing Batch Detention Pond '2A'	13.11	0.00	6.08	0.00	6.08	Existing Batch Detention Pond '2A'	0	0	5,292	6,223
Overtreatment provided by Batch Detention Pond '2A'	1.55	0.00	1.07	0.00	1.07	Overtreatment provided by Batch Detention Pond '2A'	0	-	931	-
Existing Batch Detention Pond '2B'	32.72**	0.00	14.31	0.00	14.31	Existing Batch Detention Pond '2B'	0	566	12,455	13,560
Overtreatment provided by Batch Detention Pond '2B'	2.36	0.00	0.62	0.65	1.27	Overtreatment provided by Batch Detention Pond '2B'	566	-	1,105	-
Existing 15' Engineered VFS '1'	2.49	0.00	1.31	0.00	1.31	Existing 15' Engineered VFS '1'	0	0	1,140	1,245
Existing 15' Engineered VFS '2'	2.16	0.00	1.07	0.00	1.07	Existing 15' Engineered VFS '2'	0	0	931	975
Existing 15' Engineered VFS '3'	0.42	0.00	0.19	0.00	0.19	Existing 15' Engineered VFS '3'	0	0	165	165
Existing 15' Engineered VFS '4'	0.54	0.00	0.17	0.00	0.17	Existing 15' Engineered VFS '4'	0	0	148	148
Existing 15' Engineered VFS '5'	0.66	0.00	0.28	0.00	0.28	Existing 15' Engineered VFS '5'	0	0	244	244
Existing 15' Engineered VFS '6'	0.91	0.00	0.48	0.00	0.48	Existing 15' Engineered VFS '6'	0	0	418	418
Existing 15' Engineered VFS '8'	1.32	0.00	0.63	0.00	0.63	Existing 15' Engineered VFS '8'	0	0	548	548
Existing 15' Engineered VFS '9'	0.65	0.00	0.39	0.00	0.39	Existing 15' Engineered VFS '9'	0	0	339	339
Existing 15' Engineered VFS '10'	1.44	0.00	0.82	0.00	0.82	Existing 15' Engineered VFS '10'	0	0	714	714
Proposed 15' Engineered VFS '11'	0.28	0.00	0.00	0.10	0.10	Proposed 15' Engineered VFS '11'	87	87	87	87
Proposed 15' Engineered VFS '12'	0.16	0.00	0.00	0.06	0.06	Proposed 15' Engineered VFS '12'	52	52	52	52
Proposed 15' Engineered VFS '13'	0.27	0.00	0.00	0.10	0.10	Proposed 15' Engineered VFS '13'	87	87	87	87
Proposed 15' Engineered VFS '14'	0.18	0.00	0.00	0.07	0.07	Proposed 15' Engineered VFS '14'	61	61	61	61
Overtreatment provided by VFS	0.36	0.00	0.17	0.00	0.17	Overtreatment provided by VFS	-	-	148	-
Uncaptured Area (treatment not required)	24.57	0.00	0.00	0.00	0.00	N/A	0	0	0	0
TOTAL	**189.77**	**0.00**	**79.68**	**0.98**	**80.66**		**853**	**853**	**70206**	**70206**

*Total watershed area of Batch Detention Pond '1' equals 97.05 acres plus 2.49 acres from VFS '1'

**Total watershed area of Batch Detention Pond '2B' equals 31.34 acres plus 0.91 acres from VFS '6' and 0.47 acres from off-site

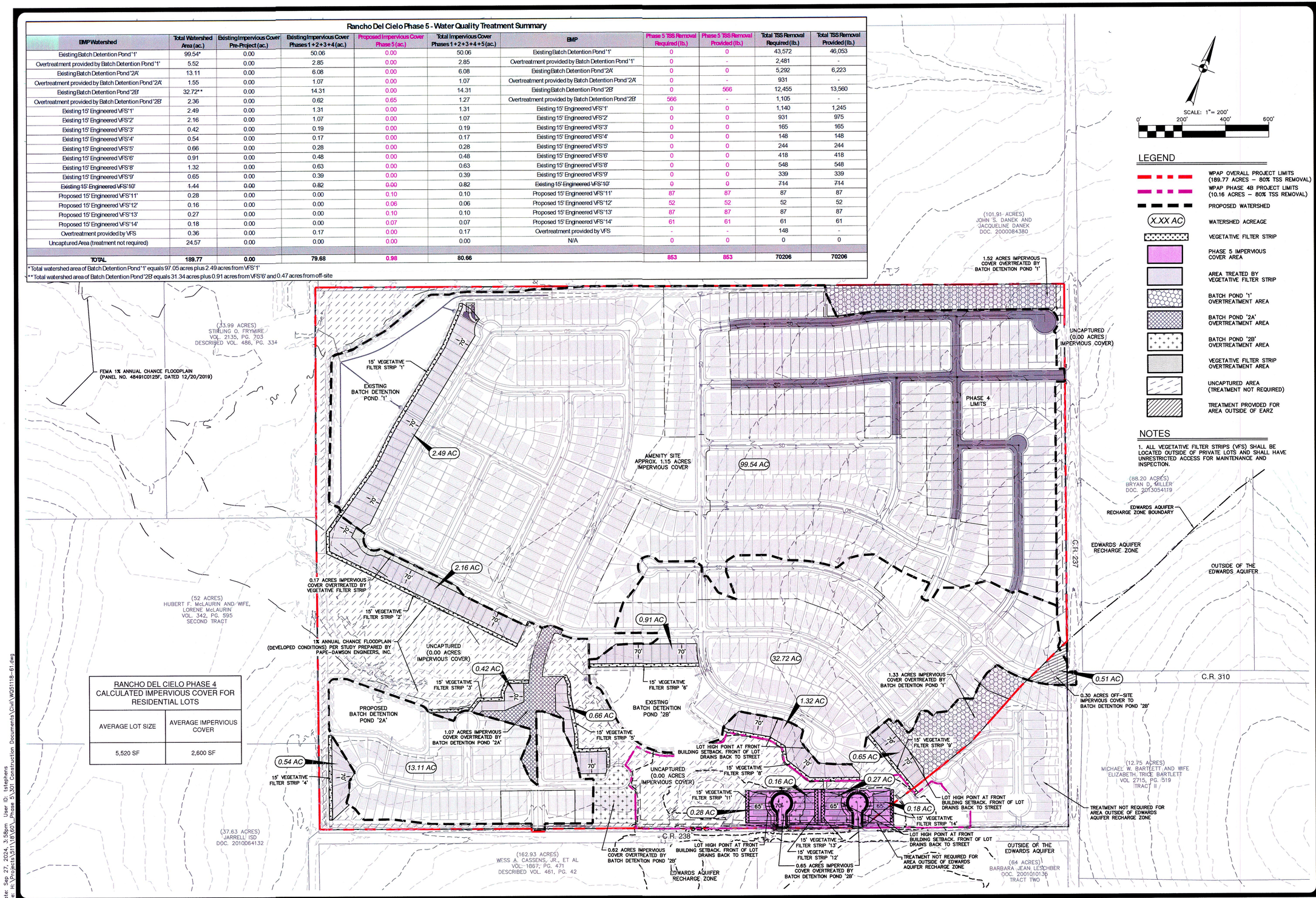

RANCHO DEL CIELO PHASE 4
CALCULATED IMPERVIOUS COVER FOR RESIDENTIAL LOTS

AVERAGE LOT SIZE	AVERAGE IMPERVIOUS COVER
5,520 SF	2,600 SF

LEGEND

- WPAP OVERALL PROJECT LIMITS (189.77 ACRES – 80% TSS REMOVAL)
- WPAP PHASE 4B PROJECT LIMITS (10.16 ACRES – 80% TSS REMOVAL)
- PROPOSED WATERSHED
- X.XX AC — WATERSHED ACREAGE
- VEGETATIVE FILTER STRIP
- PHASE 5 IMPERVIOUS COVER AREA
- AREA TREATED BY VEGETATIVE FILTER STRIP
- BATCH POND '1' OVERTREATMENT AREA
- BATCH POND '2A' OVERTREATMENT AREA
- BATCH POND '2B' OVERTREATMENT AREA
- VEGETATIVE FILTER STRIP OVERTREATMENT AREA
- UNCAPTURED AREA (TREATMENT NOT REQUIRED)
- TREATMENT PROVIDED FOR AREA OUTSIDE OF EARZ

NOTES

1. ALL VEGETATIVE FILTER STRIPS (VFS) SHALL BE LOCATED OUTSIDE OF PRIVATE LOTS AND SHALL HAVE UNRESTRICTED ACCESS FOR MAINTENANCE AND INSPECTION.

NO.	REVISION	DATE

STATE OF TEXAS
JENNIFER C. FRANKLIN
118838
LICENSED
PROFESSIONAL ENGINEER
9-30-24

PAPE-DAWSON ENGINEERS
AUSTIN | SAN ANTONIO | HOUSTON | FORT WORTH | DALLAS
10801 N MOPAC EXPY, BLDG 3, STE 200 | AUSTIN, TX 78759 | 512.454.8711
TBPE FIRM REGISTRATION #470 | TBPLS FIRM REGISTRATION #10028801

RANCHO DEL CIELO - PHASE 4B
WILLIAMSON COUNTY, TEXAS
WATER QUALITY TREATMENT SUMMARY - PHASE 5 - 1 OF 2

CITY JOB No. _____
JOB NO. 51118-61
DATE SEPTEMBER 2024
DESIGNER TS
CHECKED _____ DRAWN CE/JM
SHEET 19 OF 36

Date: Sep 27, 2024, 3:58pm User ID: tstephens
File: H:\Projects\51118\60_Phase 5\301 Construction Documents\Civil\W051118-61.dwg

THIS DOCUMENT HAS BEEN PRODUCED FROM MATERIAL THAT WAS STORED AND/OR TRANSMITTED ELECTRONICALLY AND MAY HAVE BEEN INADVERTENTLY ALTERED. RELY ONLY ON FINAL HARDCOPY MATERIALS BEARING THE CONSULTANT'S ORIGINAL SIGNATURE AND SEAL.

TSS REMOVAL CALCULATIONS
VFS '11'

Texas Commission on Environmental Quality

TSS Removal Calculations 04-20-2009

Project Name: Rancho Del Cielo Phase 2 Modification
Date Prepared: 8/28/2024

Additional information is provided for cells with a red triangle in the upper right corner. Place the cursor over the cell.
Text shown in blue indicate location of instructions in the Technical Guidance Manual - RG-348.
Characters shown in red are data entry fields.
Characters shown in black (Bold) are calculated fields. Changes to these fields will remove the equations used in the spreadsheet.

1. The Required Load Reduction for the total project: Calculations from RG-348 Pages 3-27 to 3-30

Page 3-29 Equation 3.3: $L_M = 27.2(A_N \times P)$

where:
$L_{M\ TOTAL\ PROJECT}$ = Required TSS removal resulting from the proposed development = 80% of increased load
A_N = Net increase in impervious area for the project
P = Average annual precipitation, inches

Site Data: Determine Required Load Removal Based on the Entire Project

County =	Williamson	
Total project area included in plan * =	189.77	acres
Predevelopment impervious area within the limits of the plan * =	0.00	acres
Total post-development impervious area within the limits of the plan* =	80.66	acres
Total post-development impervious cover fraction * =	0.43	
P =	32	inches
$L_{M\ TOTAL\ PROJECT}$ =	70206	lbs.

* The values entered in these fields should be for the total project area.

Number of drainage basins / outfalls areas leaving the plan area = 3

2. Drainage Basin Parameters (This information should be provided for each basin):

Drainage Basin/Outfall Area No. = VFS '11'

Total drainage basin/outfall area =	0.28	acres
Predevelopment impervious area within drainage basin/outfall area =	0.00	acres
Post-development impervious area within drainage basin/outfall area =	0.10	acres
Post-development impervious fraction within drainage basin/outfall area =	0.36	
$L_{M\ THIS\ BASIN}$ =	97	lbs.

3. Indicate the proposed BMP Code for this basin.

Proposed BMP = **Vegetated Filter Strips**
Removal efficiency = 85 percent

Aqualogic Cartridge Filter
Bioretention
Contech StormFilter
Constructed Wetland
Extended Detention
Grassy Swale
Retention / Irrigation
Sand Filter
Stormceptor
Vegetated Filter Strips
Vortechs
Wet Basin
Wet Vault

4. Calculate Maximum TSS Load Removed (L_R) for this Drainage Basin by the selected BMP Type.

RG-348 Page 3-33 Equation 3.7: L_R = (BMP efficiency) x P x (A_I x 34.6 + A_P x 0.54)

where:
A_C = Total On-Site drainage area in the BMP catchment area
A_I = Impervious area proposed in the BMP catchment area
A_P = Pervious area remaining in the BMP catchment area
L_R = TSS Load removed from this catchment area by the proposed BMP

A_C =	0.28	acres
A_I =	0.10	acres
A_P =	0.18	acres
L_R =	97	lbs

5. Calculate Fraction of Annual Runoff to Treat the drainage basin / outfall area

Desired $L_{M\ THIS\ BASIN}$ = 97 lbs.

F = 0.90

TSS REMOVAL CALCULATIONS
VFS '12'

Texas Commission on Environmental Quality

TSS Removal Calculations 04-20-2009

Project Name: Rancho Del Cielo Phase 2 Modification
Date Prepared: 8/28/2024

Additional information is provided for cells with a red triangle in the upper right corner. Place the cursor over the cell.
Text shown in blue indicate location of instructions in the Technical Guidance Manual - RG-348.
Characters shown in red are data entry fields.
Characters shown in black (Bold) are calculated fields. Changes to these fields will remove the equations used in the spreadsheet.

1. The Required Load Reduction for the total project: Calculations from RG-348 Pages 3-27 to 3-30

Page 3-29 Equation 3.3: $L_M = 27.2(A_N \times P)$

where:
$L_{M\ TOTAL\ PROJECT}$ = Required TSS removal resulting from the proposed development = 80% of increased load
A_N = Net increase in impervious area for the project
P = Average annual precipitation, inches

Site Data: Determine Required Load Removal Based on the Entire Project

County =	Williamson	
Total project area included in plan * =	189.77	acres
Predevelopment impervious area within the limits of the plan * =	0.00	acres
Total post-development impervious area within the limits of the plan* =	80.66	acres
Total post-development impervious cover fraction * =	0.43	
P =	32	inches
$L_{M\ TOTAL\ PROJECT}$ =	70206	lbs.

* The values entered in these fields should be for the total project area.

Number of drainage basins / outfalls areas leaving the plan area = 3

2. Drainage Basin Parameters (This information should be provided for each basin):

Drainage Basin/Outfall Area No. = VFS '12'

Total drainage basin/outfall area =	0.16	acres
Predevelopment impervious area within drainage basin/outfall area =	0.00	acres
Post-development impervious area within drainage basin/outfall area =	0.06	acres
Post-development impervious fraction within drainage basin/outfall area =	0.38	
$L_{M\ THIS\ BASIN}$ =	52	lbs.

3. Indicate the proposed BMP Code for this basin.

Proposed BMP = **Vegetated Filter Strips**
Removal efficiency = 85 percent

Aqualogic Cartridge Filter
Bioretention
Contech StormFilter
Constructed Wetland
Extended Detention
Grassy Swale
Retention / Irrigation
Sand Filter
Stormceptor
Vegetated Filter Strips
Vortechs
Wet Basin
Wet Vault

4. Calculate Maximum TSS Load Removed (L_R) for this Drainage Basin by the selected BMP Type.

RG-348 Page 3-33 Equation 3.7: L_R = (BMP efficiency) x P x (A_I x 34.6 + A_P x 0.54)

where:
A_C = Total On-Site drainage area in the BMP catchment area
A_I = Impervious area proposed in the BMP catchment area
A_P = Pervious area remaining in the BMP catchment area
L_R = TSS Load removed from this catchment area by the proposed BMP

A_C =	0.16	acres
A_I =	0.06	acres
A_P =	0.10	acres
L_R =	58	lbs

5. Calculate Fraction of Annual Runoff to Treat the drainage basin / outfall area

Desired $L_{M\ THIS\ BASIN}$ = 52 lbs.

F = 0.90

TSS REMOVAL CALCULATIONS
VFS '13'

Texas Commission on Environmental Quality

TSS Removal Calculations 04-20-2009

Project Name: Rancho Del Cielo Phase 2 Modification
Date Prepared: 8/28/2024

Additional information is provided for cells with a red triangle in the upper right corner. Place the cursor over the cell.
Text shown in blue indicate location of instructions in the Technical Guidance Manual - RG-348.
Characters shown in red are data entry fields.
Characters shown in black (Bold) are calculated fields. Changes to these fields will remove the equations used in the spreadsheet.

1. The Required Load Reduction for the total project: Calculations from RG-348 Pages 3-27 to 3-30

Page 3-29 Equation 3.3: $L_M = 27.2(A_N \times P)$

where:
$L_{M\ TOTAL\ PROJECT}$ = Required TSS removal resulting from the proposed development = 80% of increased load
A_N = Net increase in impervious area for the project
P = Average annual precipitation, inches

Site Data: Determine Required Load Removal Based on the Entire Project

County =	Williamson	
Total project area included in plan * =	189.77	acres
Predevelopment impervious area within the limits of the plan * =	0.00	acres
Total post-development impervious area within the limits of the plan* =	80.66	acres
Total post-development impervious cover fraction * =	0.43	
P =	32	inches
$L_{M\ TOTAL\ PROJECT}$ =	70206	lbs.

* The values entered in these fields should be for the total project area.

Number of drainage basins / outfalls areas leaving the plan area = 3

2. Drainage Basin Parameters (This information should be provided for each basin):

Drainage Basin/Outfall Area No. = VFS '13'

Total drainage basin/outfall area =	0.27	acres
Predevelopment impervious area within drainage basin/outfall area =	0.00	acres
Post-development impervious area within drainage basin/outfall area =	0.10	acres
Post-development impervious fraction within drainage basin/outfall area =	0.37	
$L_{M\ THIS\ BASIN}$ =	97	lbs.

3. Indicate the proposed BMP Code for this basin.

Proposed BMP = **Vegetated Filter Strips**
Removal efficiency = 85 percent

Aqualogic Cartridge Filter
Bioretention
Contech StormFilter
Constructed Wetland
Extended Detention
Grassy Swale
Retention / Irrigation
Sand Filter
Stormceptor
Vegetated Filter Strips
Vortechs
Wet Basin
Wet Vault

4. Calculate Maximum TSS Load Removed (L_R) for this Drainage Basin by the selected BMP Type.

RG-348 Page 3-33 Equation 3.7: L_R = (BMP efficiency) x P x (A_I x 34.6 + A_P x 0.54)

where:
A_C = Total On-Site drainage area in the BMP catchment area
A_I = Impervious area proposed in the BMP catchment area
A_P = Pervious area remaining in the BMP catchment area
L_R = TSS Load removed from this catchment area by the proposed BMP

A_C =	0.27	acres
A_I =	0.10	acres
A_P =	0.17	acres
L_R =	97	lbs

5. Calculate Fraction of Annual Runoff to Treat the drainage basin / outfall area

Desired $L_{M\ THIS\ BASIN}$ = 87 lbs.

F = 0.90

TSS REMOVAL CALCULATIONS
VFS '14'

Texas Commission on Environmental Quality

TSS Removal Calculations 04-20-2009

Project Name: Rancho Del Cielo Phase 2 Modification
Date Prepared: 8/28/2024

Additional information is provided for cells with a red triangle in the upper right corner. Place the cursor over the cell.
Text shown in blue indicate location of instructions in the Technical Guidance Manual - RG-348.
Characters shown in red are data entry fields.
Characters shown in black (Bold) are calculated fields. Changes to these fields will remove the equations used in the spreadsheet.

1. The Required Load Reduction for the total project: Calculations from RG-348 Pages 3-27 to 3-30

Page 3-29 Equation 3.3: $L_M = 27.2(A_N \times P)$

where:
$L_{M\ TOTAL\ PROJECT}$ = Required TSS removal resulting from the proposed development = 80% of increased load
A_N = Net increase in impervious area for the project
P = Average annual precipitation, inches

Site Data: Determine Required Load Removal Based on the Entire Project

County =	Williamson	
Total project area included in plan * =	189.77	acres
Predevelopment impervious area within the limits of the plan * =	0.00	acres
Total post-development impervious area within the limits of the plan* =	80.66	acres
Total post-development impervious cover fraction * =	0.43	
P =	32	inches
$L_{M\ TOTAL\ PROJECT}$ =	70206	lbs.

* The values entered in these fields should be for the total project area.

Number of drainage basins / outfalls areas leaving the plan area = 3

2. Drainage Basin Parameters (This information should be provided for each basin):

Drainage Basin/Outfall Area No. = VFS '14'

Total drainage basin/outfall area =	0.18	acres
Predevelopment impervious area within drainage basin/outfall area =	0.00	acres
Post-development impervious area within drainage basin/outfall area =	0.07	acres
Post-development impervious fraction within drainage basin/outfall area =	0.39	
$L_{M\ THIS\ BASIN}$ =	61	lbs.

3. Indicate the proposed BMP Code for this basin.

Proposed BMP = **Vegetated Filter Strips**
Removal efficiency = 85 percent

Aqualogic Cartridge Filter
Bioretention
Contech StormFilter
Constructed Wetland
Extended Detention
Grassy Swale
Retention / Irrigation
Sand Filter
Stormceptor
Vegetated Filter Strips
Vortechs
Wet Basin
Wet Vault

4. Calculate Maximum TSS Load Removed (L_R) for this Drainage Basin by the selected BMP Type.

RG-348 Page 3-33 Equation 3.7: L_R = (BMP efficiency) x P x (A_I x 34.6 + A_P x 0.54)

where:
A_C = Total On-Site drainage area in the BMP catchment area
A_I = Impervious area proposed in the BMP catchment area
A_P = Pervious area remaining in the BMP catchment area
L_R = TSS Load removed from this catchment area by the proposed BMP

A_C =	0.18	acres
A_I =	0.07	acres
A_P =	0.11	acres
L_R =	67	lbs

5. Calculate Fraction of Annual Runoff to Treat the drainage basin / outfall area

Desired $L_{M\ THIS\ BASIN}$ = 61 lbs.

F = 0.90

TSS REMOVAL CALCULATIONS
EXISTING BATCH DETENTION POND '2B'

Texas Commission on Environmental Quality

TSS Removal Calculations 04-20-2009

Project Name: Rancho Del Cielo Phase 2 Modification
Date Prepared: 8/28/2024

Additional information is provided for cells with a red triangle in the upper right corner. Place the cursor over the cell.
Text shown in blue indicate location of instructions in the Technical Guidance Manual - RG-348.
Characters shown in red are data entry fields.
Characters shown in black (Bold) are calculated fields. Changes to these fields will remove the equations used in the spreadsheet.

1. The Required Load Reduction for the total project: Calculations from RG-348 Pages 3-27 to 3-30

Page 3-29 Equation 3.3: $L_M = 27.2(A_N \times P)$

where:
$L_{M\ TOTAL\ PROJECT}$ = Required TSS removal resulting from the proposed development = 80% of increased load
A_N = Net increase in impervious area for the project
P = Average annual precipitation, inches

Site Data: Determine Required Load Removal Based on the Entire Project

County =	Williamson	
Total project area included in plan * =	189.77	acres
Predevelopment impervious area within the limits of the plan * =	0.00	acres
Total post-development impervious area within the limits of the plan* =	80.66	acres
Total post-development impervious cover fraction * =	0.43	
P =	32	inches
$L_{M\ TOTAL\ PROJECT}$ =	70206	lbs.

* The values entered in these fields should be for the total project area.

Number of drainage basins / outfalls areas leaving the plan area = 3

2. Drainage Basin Parameters (This information should be provided for each basin):

Drainage Basin/Outfall Area No. = 2B

Total drainage basin/outfall area =	32.72	acres
Predevelopment impervious area within drainage basin/outfall area =	0.00	acres
Post-development impervious area within drainage basin/outfall area =	14.31	acres
Post-development impervious fraction within drainage basin/outfall area =	0.44	
$L_{M\ THIS\ BASIN}$ =	12455	lbs.

***Impervious cover required for treatment excludes 0.30 acres of impervious cover within basin catchment area and outside of the EARZ**

3. Indicate the proposed BMP Code for this basin.

Proposed BMP = **Extended Detention** **Batch Detention**
Removal efficiency = 91 percent

Aqualogic Cartridge Filter
Bioretention
Contech StormFilter
Constructed Wetland
Extended Detention
Grassy Swale
Retention / Irrigation
Sand Filter
Stormceptor
Vegetated Filter Strips
Vortechs
Wet Basin
Wet Vault

4. Calculate Maximum TSS Load Removed (L_R) for this Drainage Basin by the selected BMP Type.

RG-348 Page 3-33 Equation 3.7: L_R = (BMP efficiency) x P x (A_I x 34.6 + A_P x 0.54)

where:
A_C = Total On-Site drainage area in the BMP catchment area
A_I = Impervious area proposed in the BMP catchment area
A_P = Pervious area remaining in the BMP catchment area
L_R = TSS Load removed from this catchment area by the proposed BMP

A_C =	32.72	acres	
A_I =	14.61	acres	***A_I includes 0.30 acres of impervious cover within basin**
A_P =	18.11	acres	**catchment area and outside of the EARZ for treatment**
L_R =	15005	lbs	

5. Calculate Fraction of Annual Runoff to Treat the drainage basin / outfall area

Desired $L_{M\ THIS\ BASIN}$ = 13560 lbs. **Overtreatment for 1.27 acres impervious cover = 12,455 + (27.2*1.27*32) = 13,560**

F = 0.90

6. Calculate Capture Volume required by the BMP Type for this drainage basin / outfall area. Calculations from RG-348 Pages 3-34 to 3-36

Rainfall Depth =	1.70	inches
Post Development Runoff Coefficient =	0.33	
On-site Water Quality Volume =	66544	cubic feet

Calculations from RG-348 Pages 3-36 to 3-37

Off-site area draining to BMP =	0.00	acres
Off-site Impervious cover draining to BMP =	0.00	acres
Impervious fraction of off-site area =	0	
Off-site Runoff Coefficient =	0.00	
Off-site Water Quality Volume =	0	cubic feet
Storage for Sediment =	13309	
Total Capture Volume (required water quality volume(s) x 1.20) =	79853	cubic feet

NOTE: POND '2B' WATER QUALITY VOLUME PROVIDED = 82,727 CUBIC FEET. REFERENCE RANCHO DEL CIELO PHASE 1 CONSTRUCTION PLANS BY PAPE-DAWSON ENGINEERS, INC. DATED 1/25/21 FOR POND DETAILS.

NO.	REVISION	DATE

STATE OF TEXAS
JENNIFER C. FRANKLIN
118838
LICENSED
PROFESSIONAL ENGINEER
9-25-24

PAPE-DAWSON ENGINEERS
AUSTIN | SAN ANTONIO | HOUSTON | FORT WORTH | DALLAS
10801 N MOPAC EXPY, BLDG 3, STE 200 | AUSTIN, TX 78759 | 512.454.8711
TBPE FIRM REGISTRATION #470 | TBPLS FIRM REGISTRATION #10028801

RANCHO DEL CIELO - PHASE 4B
WILLIAMSON COUNTY, TEXAS
WATER QUALITY TREATMENT SUMMARY - PHASE 5 - 2 OF 2

CITY JOB No. _____
JOB NO. 51118-61
DATE SEPTEMBER 2024
DESIGNER TS
CHECKED _____ DRAWN CE/JM
SHEET 20 OF 36

Date: Sep 24, 2024, 4:03pm User ID: tstephens
File: H:\Projects\51\18\60_Phase 5\301 Construction Documents\Civil\WD51118-61.dwg

THIS DOCUMENT WAS BEEN PRODUCED FROM MATERIAL THAT WAS STORED AND/OR TRANSMITTED ELECTRONICALLY AND MAY HAVE BEEN INADVERTENTLY ALTERED. RELY ONLY ON FINAL HARDCOPY MATERIALS BEARING THE CONSULTANT'S ORIGINAL SIGNATURE AND SEAL.

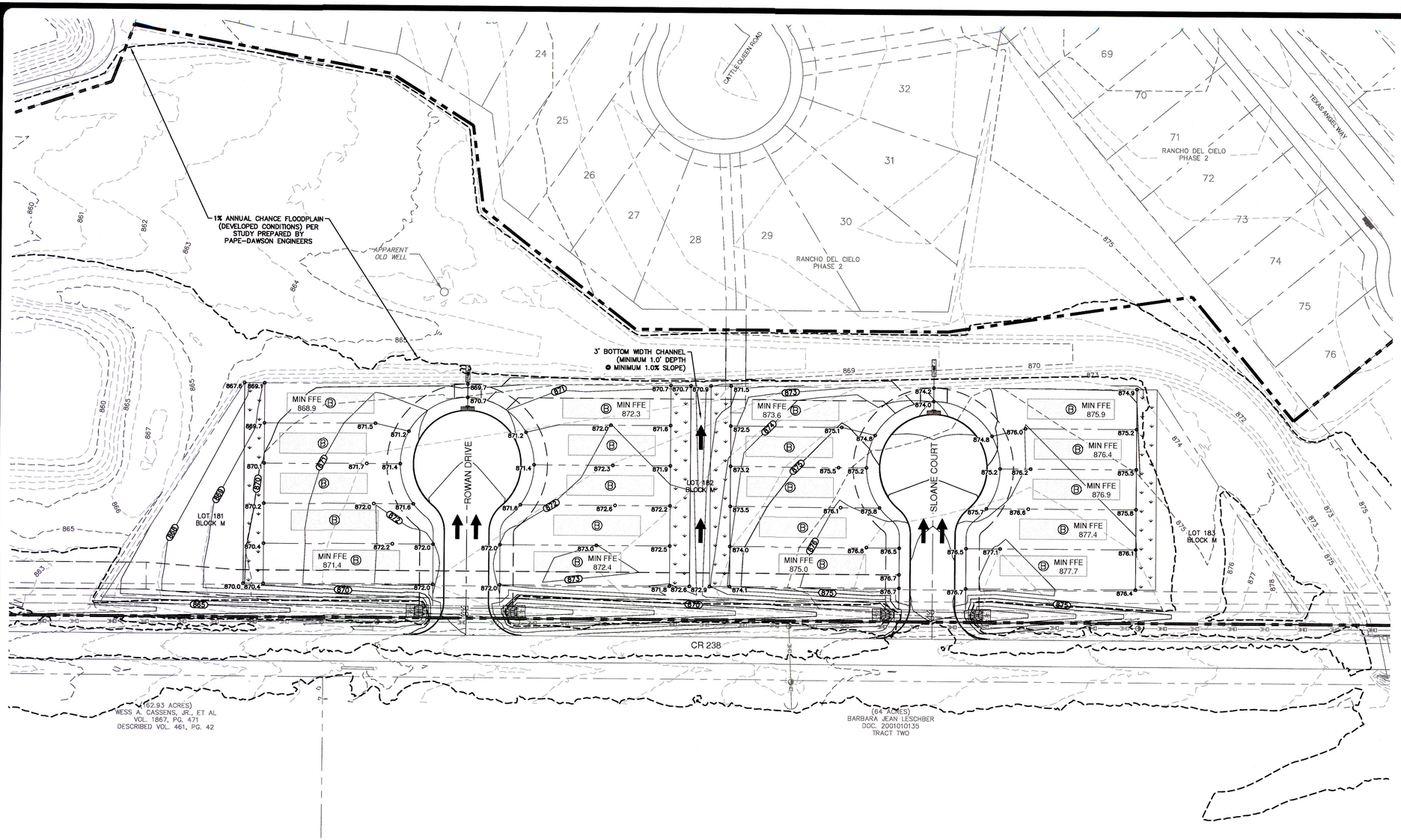

SCALE: 1" = 40'

0' 40' 80' 120'

LEGEND

- PROPOSED CONTOUR LINE
- EXISTING CONTOUR LINE
- CONTRACTOR TO GRADE SWALE ALONG LOT LINE
- EG XXX.X — EXISTING GRADE SPOT ELEVATION
- XXX.X — FINISHED GRADE SPOT ELEVATION
- (A) TYPE 'A' LOT GRADING PER FHA-HUD REQUIREMENTS
- (B) TYPE 'B' LOT GRADING PER FHA-HUD REQUIREMENTS
- (C) TYPE 'C' LOT GRADING PER FHA-HUD REQUIREMENTS
- DIRECTION OF FLOW
- 1% ANNUAL CHANCE FLOODPLAIN (DEVELOPED CONDITIONS) PER STUDY PREPARED BY PAPE-DAWSON ENGINEERS.

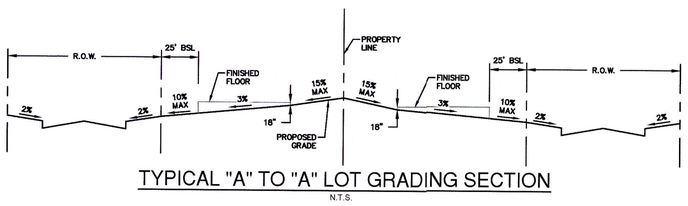

TYPICAL "A" TO "A" LOT GRADING SECTION

N.T.S.

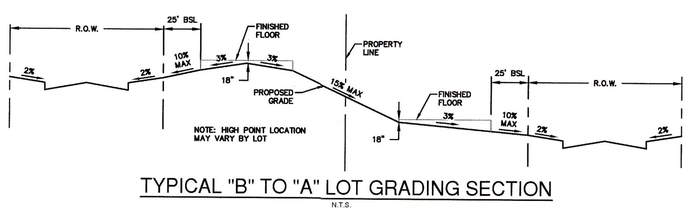

TYPICAL "B" TO "A" LOT GRADING SECTION

N.T.S.

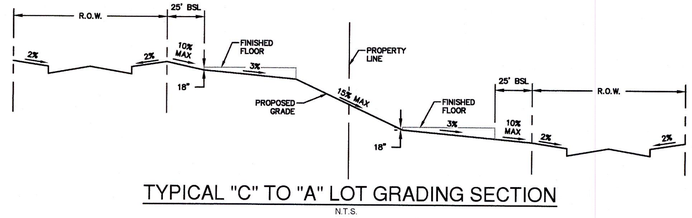

TYPICAL "C" TO "A" LOT GRADING SECTION

N.T.S.

NO.	REVISION	DATE

STATE OF TEXAS
JENNIFER C. FRANKLIN
118838
LICENSED PROFESSIONAL ENGINEER
9-30-24

PAPE-DAWSON ENGINEERS
AUSTIN | SAN ANTONIO | HOUSTON | FORT WORTH | DALLAS
10801 N MOPAC EXPY, BLDG 3, STE 200 | AUSTIN, TX 78759 | 512.454.8711
TBPE FIRM REGISTRATION #470 | TBPLS FIRM REGISTRATION #10028801

RANCHO DEL CIELO - PHASE 4B
WILLIAMSON COUNTY, TEXAS

OVERALL GRADING PLAN

CITY JOB No.
JOB NO. 51118-61
DATE SEPTEMBER 2024
DESIGNER TS
CHECKED DRAWN CE/JM
SHEET 21 OF 36

Date: Sep 30, 2024, 3:57pm User ID: tstephens
File: H:\Projects\511\18\60_Phase 5\301 Construction Documents\Civil\GR51118-61.dwg

THIS DOCUMENT WAS PRODUCED FROM MATERIAL THAT WAS STORED AND/OR TRANSMITTED ELECTRONICALLY AND MAY HAVE BEEN INADVERTENTLY ALTERED. RELY ONLY ON FINAL HARDCOPY MATERIALS BEARING THE CONSULTANT'S ORIGINAL SIGNATURE AND SEAL.

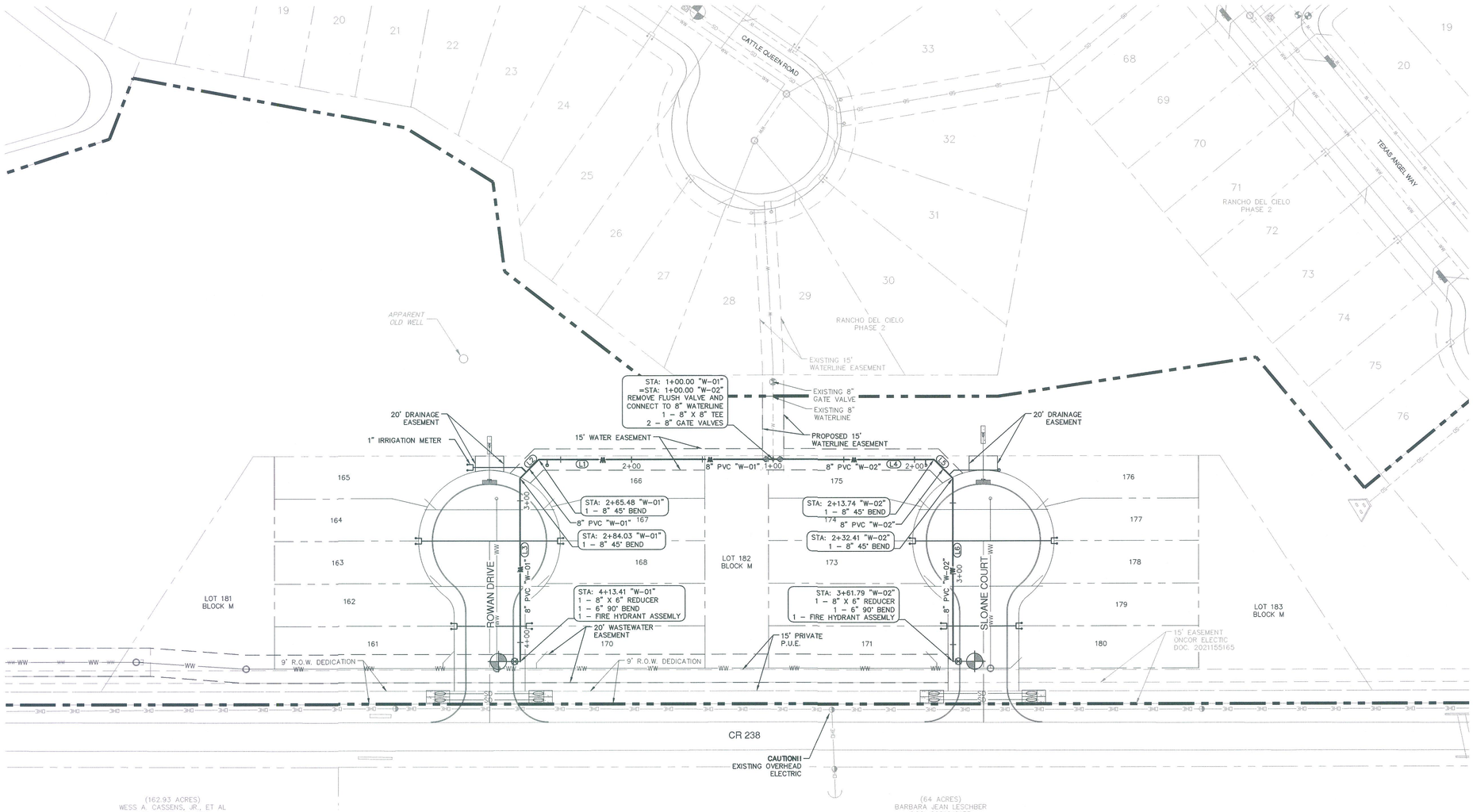

SCALE: 1"= 40'

0' 40' 80' 120'

LEGEND

- WATER LINE
- WASTEWATER LINE & MH
- STORM DRAIN LINE & MH
- CURB INLET
- SINGLE WATER SERVICE
- DOUBLE WATER SERVICE
- SINGLE WW SERVICE
- DOUBLE WW SERVICE
- GATE VALVE
- FIRE HYDRANT
- EXISTING GATE VALVE
- EXISTING FIRE HYDRANT
- EXISTING WATER LINE
- EXISTING WASTEWATER LINE
- EXISTING STORM DRAIN LINE
- 2 – 4" IRRIGATION SLEEVES

NOTES

1. ALL WATER SERVICE LINE TAPS TO BE LOCATED AT A MINIMUM 3' OUTSIDE THE BACK OF CURB TO ALLOW SERVICE LINE SLEEVES BENEATH THE PAVEMENT PER DETAIL G-01.
2. THERE SHALL BE A MINIMUM 1' CLEARANCE FROM BACK OF CURB INLETS TO OUTSIDE EDGE OF WATERLINE.
3. IRRIGATION METERS TO INCLUDE BACKFLOW PREVENTION ASSEMBLIES.

LINE TABLE		
LINE #	LENGTH	BEARING
L1	165.48'	S68°47'20"W
L2	18.55'	S23°46'53"W
L3	129.38'	S21°12'42"E
L4	113.74'	N68°47'20"E
L5	18.67'	S66°34'26"E
L6	129.38'	S21°12'42"E

NO.	REVISION	DATE

STATE OF TEXAS
JENNIFER C. FRANKLIN
118838
LICENSED PROFESSIONAL ENGINEER
9-15-24

PAPE-DAWSON ENGINEERS
AUSTIN | SAN ANTONIO | HOUSTON | FORT WORTH | DALLAS
10801 N MOPAC EXPY, BLDG 3, STE 200 | AUSTIN, TX 78759 | 512.454.8711
TBPE FIRM REGISTRATION #470 | TBPLS FIRM REGISTRATION #10028801

RANCHO DEL CIELO - PHASE 4B
WILLIAMSON COUNTY, TEXAS

OVERALL WATER PLAN

CITY JOB No.
JOB NO. 51118-61
DATE SEPTEMBER 2024
DESIGNER TS
CHECKED DRAWN CE/JM
SHEET 22 OF 36

Date: Sep 24, 2024, 4:04pm User ID: tstephens
File: H:\Projects\51118\60_Phase 5\301 Construction Documents\Civil\OW51118-61.dwg
THIS DOCUMENT HAS BEEN PRODUCED FROM MATERIAL THAT WAS STORED AND/OR TRANSMITTED ELECTRONICALLY AND MAY HAVE BEEN INADVERTENTLY ALTERED. RELY ONLY ON FINAL HARDCOPY MATERIALS BEARING THE CONSULTANT'S ORIGINAL SIGNATURE AND SEAL.

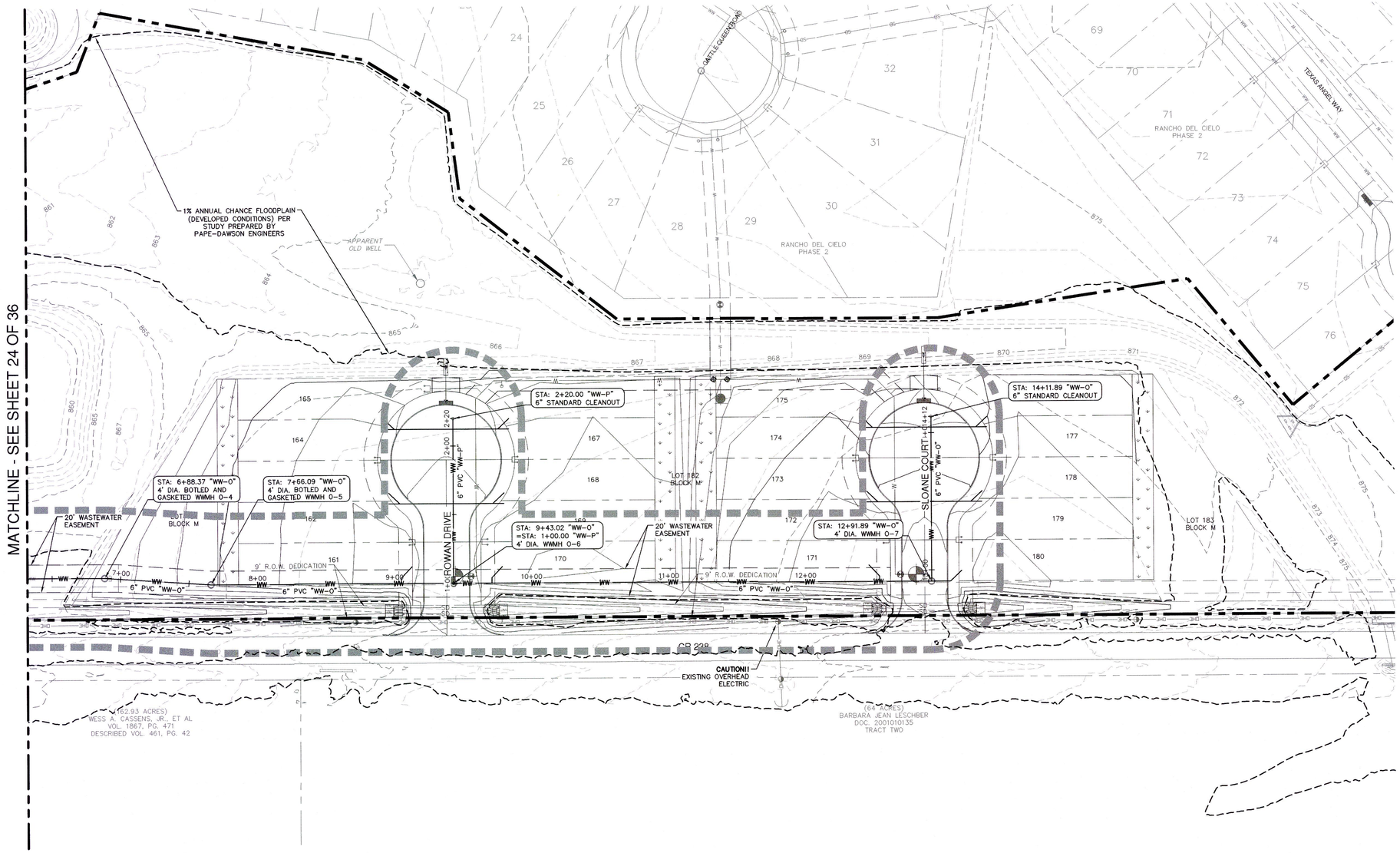

SCALE: 1"= 40'

0' 40' 80' 120'

LEGEND

- WATER LINE
- WASTEWATER LINE & MH
- STORM DRAIN LINE & MH
- CURB INLET
- SINGLE WATER SERVICE
- DOUBLE WATER SERVICE
- SINGLE WW SERVICE
- DOUBLE WW SERVICE
- GATE VALVE
- FIRE HYDRANT
- EXISTING GATE VALVE
- EXISTING FIRE HYDRANT
- EXISTING WATER LINE
- EXISTING WASTEWATER LINE
- EXISTING STORM DRAIN LINE
- EXISTING FORCE MAIN LINE
- 50' SCS BUFFER

NOTES

1. CONTRACTOR TO FIELD VERIFY LOCATIONS OF EXISTING UTILITIES AND IMPROVEMENTS AND NOTIFY ENGINEER IF DISCREPANCIES EXIST.

NO.	REVISION	DATE

STATE OF TEXAS
JENNIFER C. FRANKLIN
118838
LICENSED PROFESSIONAL ENGINEER
9-30-24

PAPE-DAWSON ENGINEERS
AUSTIN | SAN ANTONIO | HOUSTON | FORT WORTH | DALLAS
10801 N MOPAC EXPY, BLDG 3, STE 200 | AUSTIN, TX 78759 | 512.454.8711
TBPE FIRM REGISTRATION #470 | TBPLS FIRM REGISTRATION #10028801

RANCHO DEL CIELO - PHASE 4B
WILLIAMSON COUNTY, TEXAS

OVERALL WASTEWATER PLAN 1 OF 2

CITY JOB No.
JOB NO. 51118-61
DATE SEPTEMBER 2024
DESIGNER TS
CHECKED DRAWN CE/JM
SHEET 23 OF 36

Date: Sep 30, 2024, 3:57pm User ID: tstephens
File: H:\Projects\51\118\60_Phase 5\30\ Construction Documents\Civil\051118-61.dwg

THIS DOCUMENT HAS BEEN PRODUCED FROM MATERIAL THAT WAS STORED AND/OR TRANSMITTED ELECTRONICALLY AND MAY HAVE BEEN INADVERTENTLY ALTERED. RELY ONLY ON FINAL HARDCOPY MATERIALS BEARING THE CONSULTANT'S ORIGINAL SIGNATURE AND SEAL.

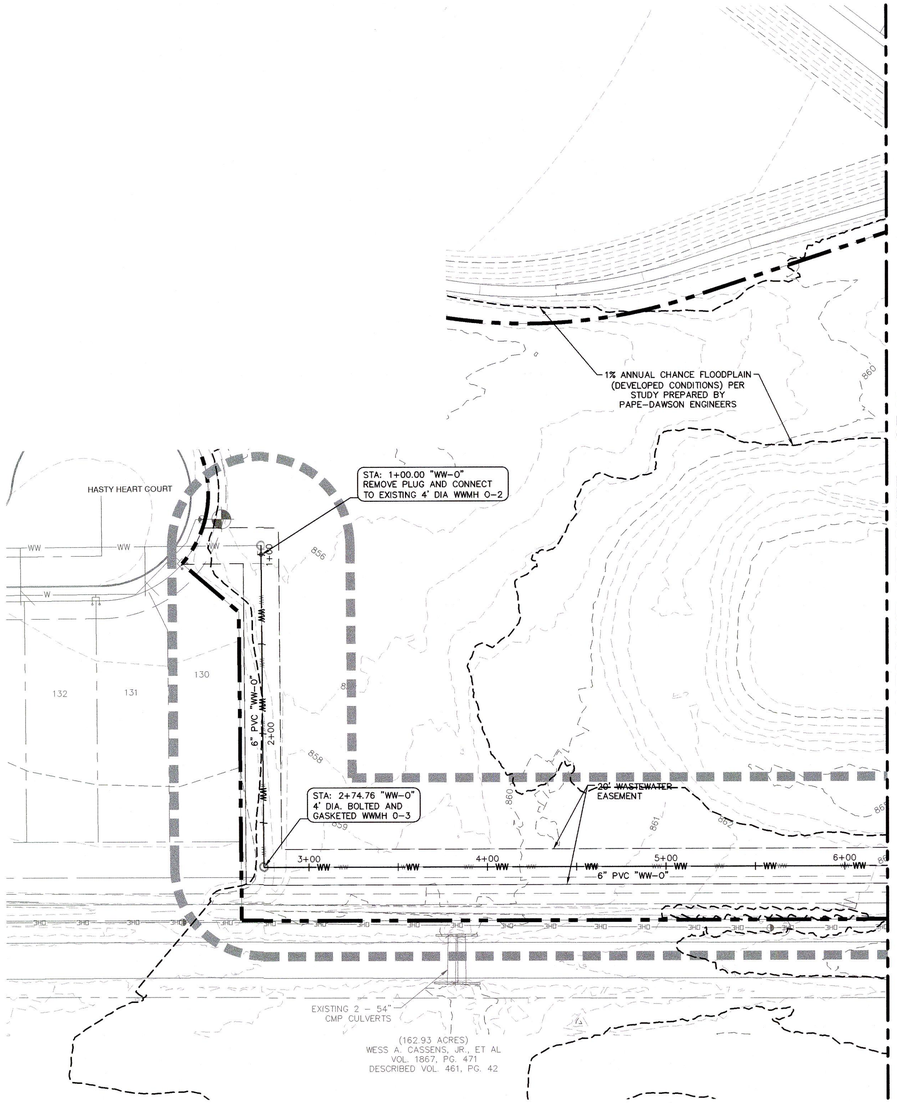

SCALE: 1"= 40'

0' 40' 80' 120'

LEGEND

- WATER LINE
- WASTEWATER LINE & MH
- STORM DRAIN LINE & MH
- CURB INLET
- SINGLE WATER SERVICE
- DOUBLE WATER SERVICE
- SINGLE WW SERVICE
- DOUBLE WW SERVICE
- GATE VALVE
- FIRE HYDRANT
- EXISTING GATE VALVE
- EXISTING FIRE HYDRANT
- EXISTING WATER LINE
- EXISTING WASTEWATER LINE
- EXISTING STORM DRAIN LINE
- EXISTING FORCE MAIN LINE
- 50' SCS BUFFER

NOTES

1. CONTRACTOR TO FIELD VERIFY LOCATIONS OF EXISTING UTILITIES AND IMPROVEMENTS AND NOTIFY ENGINEER IF DISCREPANCIES EXIST.

NO.	REVISION	DATE

STATE OF TEXAS
JENNIFER C. FRANKLIN
118838
LICENSED
PROFESSIONAL ENGINEER
9-30-24

PAPE-DAWSON ENGINEERS
AUSTIN I SAN ANTONIO I HOUSTON I FORT WORTH I DALLAS
10801 N MOPAC EXPY, BLDG 3, STE 200 I AUSTIN, TX 78759 I 512.454.8711
TBPE FIRM REGISTRATION #470 I TBPLS FIRM REGISTRATION #10028801

RANCHO DEL CIELO - PHASE 4B
WILLIAMSON COUNTY, TEXAS

OVERALL WASTEWATER PLAN 2 OF 2

CITY JOB No.
JOB NO. 51118-61
DATE SEPTEMBER 2024
DESIGNER TS
CHECKED DRAWN CE/JM
SHEET 24 OF 36

Date: Sep 30, 2024, 3:57pm User ID: tstephens
File: H:\Projects\511\18\60_Phase 5\301 Construction Documents\Civil\OS51118-61.dwg

THIS DOCUMENT HAS BEEN PRODUCED FROM MATERIAL THAT WAS STORED AND/OR TRANSMITTED ELECTRONICALLY AND MAY HAVE BEEN INADVERTENTLY ALTERED. RELY ONLY ON FINAL HARDCOPY MATERIALS BEARING THE CONSULTANT'S ORIGINAL SIGNATURE AND SEAL.

Date: Sep 30, 2024, 2:38pm User ID: jessemesa
File: H:\Projects\511\18\60_Phase 5\301 Construction Documents\Civil\SSP51118-61.dwg

THIS DOCUMENT HAS BEEN PRODUCED FROM MATERIAL THAT WAS STORED AND/OR TRANSMITTED ELECTRONICALLY AND MAY HAVE BEEN INADVERTENTLY ALTERED. RELY ONLY ON FINAL HARDCOPY MATERIALS BEARING THE CONSULTANT'S ORIGINAL SIGNATURE AND SEAL.

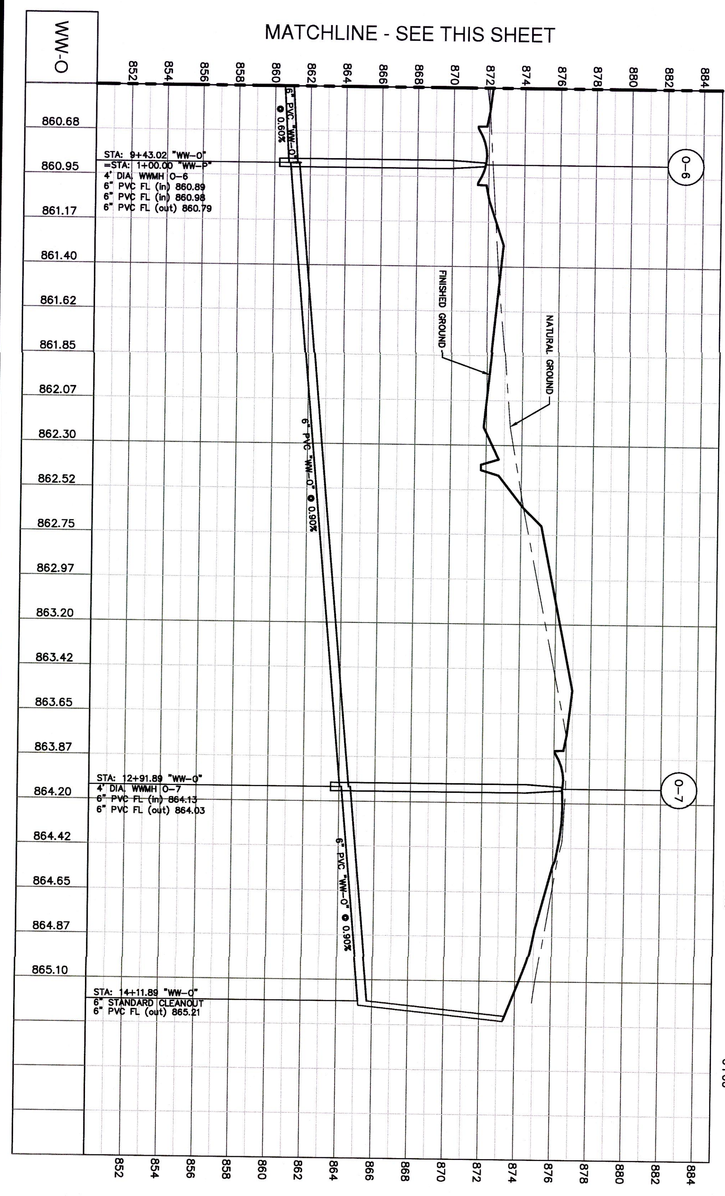

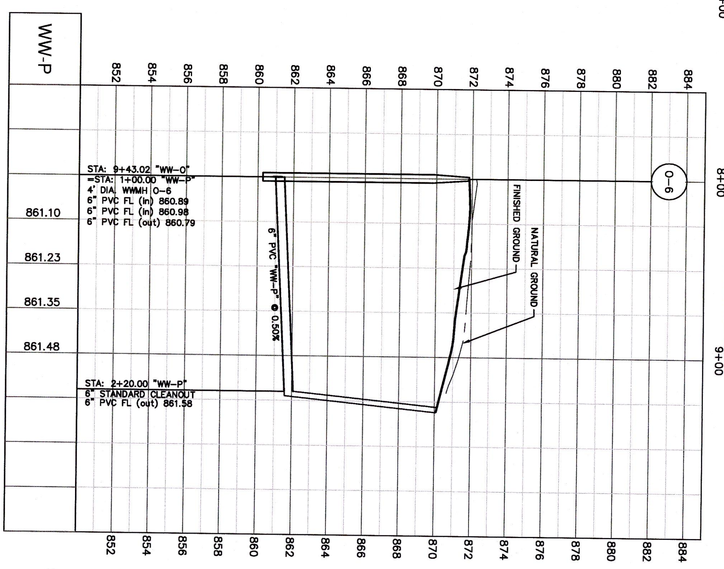

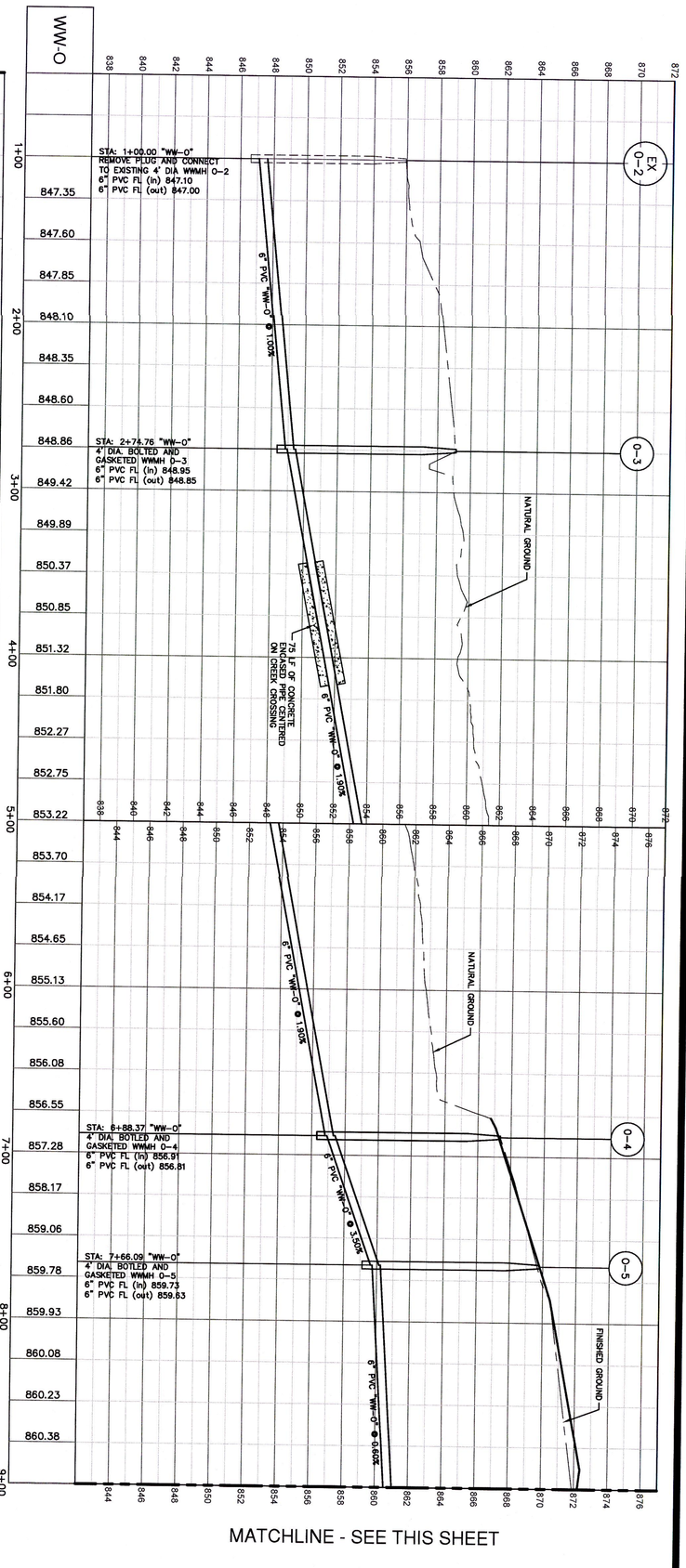

PROFILE SCALES:
1" = 40' HORIZONTAL
1" = 4' VERTICAL

PROFILE LEGEND:
NATURAL GROUND
SUBGRADE
FINISHED GRADE
PROPOSED WASTEWATER
1-JOINT OF PRESSURE PIPE
STEEL ENCASEMENT WITH SPACERS SEE CONSTRUCTION DETAILS

CITY JOB No.
JOB NO. 51118-61
DATE SEPTEMBER 2024
DESIGNER TS
CHECKED DRAWN CE/JM
SHEET 25 OF 36

RANCHO DEL CIELO - PHASE 4B
WILLIAMSON COUNTY, TEXAS

WASTEWATER PLAN & PROFILE
WW-O & WW-P

PAPE-DAWSON ENGINEERS
AUSTIN | SAN ANTONIO | HOUSTON | FORT WORTH | DALLAS
10801 N MOPAC EXPY, BLDG 3, STE 200 | AUSTIN, TX 78759 | 512.454.8711
TBPE FIRM REGISTRATION #470 | TBPLS FIRM REGISTRATION #10028801

STATE OF TEXAS
JENNIFER C. FRANKLIN
118836
LICENSED
PROFESSIONAL ENGINEER
9-30-24

NO.	REVISION	DATE

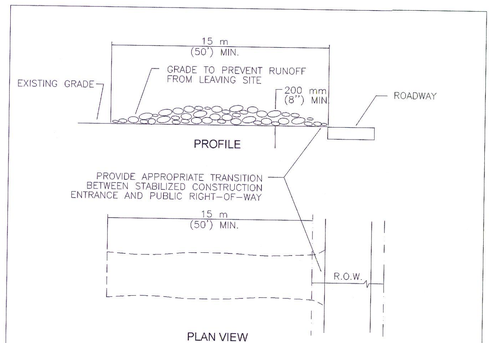

NOTES:

1. STONE SIZE: 75-125 mm (3-5") OPEN GRADED ROCK.
2. LENGTH: AS EFFECTIVE BUT NOT LESS THAN 15 m (50').
3. THICKNESS: NOT LESS THAN 200 mm (8").
4. WIDTH: NOT LESS THAN FULL WIDTH OF ALL POINTS OF INGRESS/EGRESS.
5. WASHING: WHEN NECESSARY, VEHICLE WHEELS SHALL BE CLEANED TO REMOVE SEDIMENT PRIOR TO ENTRANCE ONTO PUBLIC ROADWAY. WHEN WASHING IS REQUIRED, IT SHALL BE DONE ON AN AREA STABILIZED WITH CRUSHED STONE AND DRAINS INTO AN APPROVED TRAP OR SEDIMENT BASIN. ALL SEDIMENT SHALL BE PREVENTED FROM ENTERING ANY STORM DRAIN, DITCH OR WATERCOURSE USING APPROVED METHODS.
6. MAINTENANCE: THE ENTRANCE SHALL BE MAINTAINED IN A CONDITION THAT WILL PREVENT TRACKING OR FLOWING OF SEDIMENT ONTO PUBLIC ROADWAY. THIS MAY REQUIRE PERIODIC TOP DRESSING WITH ADDITIONAL STONE AS CONDITIONS DEMAND, AS WELL AS REPAIR AND CLEAN OUT OF ANY MEASURE DEVICES USED TO TRAP SEDIMENT. ALL SEDIMENTS THAT IS SPILLED, DROPPED, WASHED OR TRACKED ONTO PUBLIC ROADWAY MUST BE REMOVED IMMEDIATELY.
7. DRAINAGE: ENTRANCE MUST BE PROPERLY GRADED OR INCORPORATE A DRAINAGE SWALE TO PREVENT RUNOFF FROM LEAVING THE CONSTRUCTION SITE.

CITY OF AUSTIN WATERSHED PROTECTION DEPARTMENT	STABILIZED CONSTRUCTION ENTRANCE	
RECORD COPY SIGNED BY J. PATRICK MURPHY 5/23/00 ADOPTED	THE ARCHITECT/ENGINEER ASSUMES RESPONSIBILITY FOR APPROPRIATE USE OF THIS STANDARD.	STANDARD NO. 641S-1

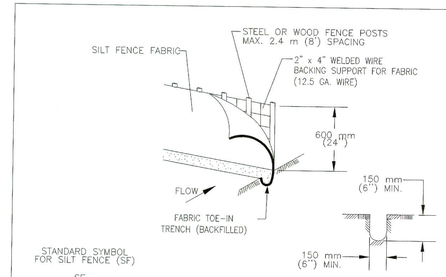

1. STEEL OR WOOD POSTS WHICH SUPPORT THE SILT FENCE SHALL BE INSTALLED ON A SLIGHT ANGLE TOWARD THE ANTICIPATED RUNOFF SOURCE. POST MUST BE EMBEDDED A MINIMUM OF 300 mm (12 INCHES). IF WOOD POSTS CANNOT ACHIEVE 300 mm (12 inches) DEPTH, USE STEEL POSTS.
2. THE TOE OF THE SILT FENCE SHALL BE TRENCHED IN WITH A SPADE OR MECHANICAL TRENCHER, SO THAT THE DOWNSLOPE FACE OF THE TRENCH IS FLAT AND PERPENDICULAR TO THE LINE OF FLOW.
3. THE TRENCH MUST BE A MINIMUM OF 150 mm (6 inches) DEEP AND 150 mm (6 inches) WIDE TO ALLOW FOR THE SILT FENCE FABRIC TO BE LAID IN THE GROUND AND BACKFILLED WITH COMPACTED MATERIAL.
4. SILT FENCE FABRIC SHOULD BE SECURELY FASTENED TO EACH STEEL OR WOOD SUPPORT POST OR TO WOVEN WIRE , WHICH IS IN TURN ATTACHED TO THE STEEL OR WOOD FENCE POST.
5. INSPECTION SHALL BE MADE WEEKLY OR AFTER EACH RAINFALL EVENT AND REPAIR OR REPLACEMENT SHALL BE MADE PROMPTY AS NEEDED.
6. SILT FENCE SHALL BE REMOVED WHEN THE SITE IS COMPLETELY STABILIZED SO AS NOT TO BLOCK OR IMPEDE STORM FLOW OR DRAINAGE.
7. ACCUMULATED SILT SHALL BE REMOVED WHEN IT REACHES A DEPTH OF 150 mm (6 inches). THE SILT SHALL BE DISPOSED OF ON AN APPROVED SITE AND IN SUCH A MANNER THAT WILL NOT CONTRIBUTE TO ADDITONAL SILTATION.

CITY OF AUSTIN WATERSHED PROTECTION DEPARTMENT	SILT FENCE	
RECORD COPY SIGNED BY MORGAN BYARS 09/01/2011 ADOPTED	THE ARCHITECT/ENGINEER ASSUMES RESPONSIBILITY FOR APPROPRIATE USE OF THIS STANDARD.	STANDARD NO. 642S-1

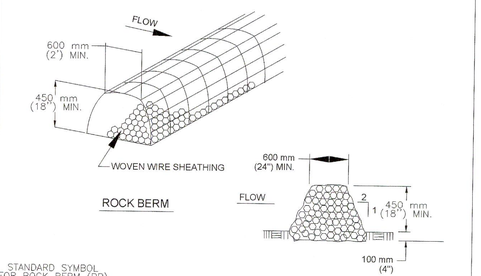

NOTES:

1. USE ONLY OPEN GRADED ROCK 75 to 125 mm (3 to 5") DIAMETER FOR ALL CONDITIONS.
2. THE ROCK BERM SHALL BE SECURED WITH A WOVEN WIRE SHEATHING HAVING MAXIMUM 25 mm (1") OPENING AND MINIMUM WIRE DIAMETER OF 12.9 mm (20 GAUGE).
3. THE ROCK BERM SHALL BE INSPECTED DAILY OR AFTER EACH RAIN, AND THE STONE AND/OR FABRIC CORE-WOVEN SHEATHING SHALL BE REPLACED WHEN THE STRUCTURE CEASES TO FUNCTION AS INTENDED, DUE TO SEDIMENT ACCUMULATION AMONG THE ROCKS, WASHOUT, CONSTRUCTION TRAFFIC DAMAGE, ETC.
4. IF SEDIMENT REACHES A DEPTH EQUAL TO ONE-THIRD THE HEIGHT OF THE BERM OR 150 mm (6"), WHICHEVER IS LESS, THE SEDIMENT SHALL BE REMOVED AND DISPOSED OF ON AN APPROVED SITE AND IN A MANNER THAT WILL NOT CREATE A SEDIMENTION PROBLEM.
5. WHEN THE SITE IS COMPLETELY STABILIZED,THE BERM AND ACCUMULATED SEDIMENT SHALL BE REMOVED AND DISPOSED OF IN AN APPROVED MANNER.

CITY OF AUSTIN WATERSHED PROTECTION DEPARTMENT	ROCK BERM	
RECORD COPY SIGNED BY MORGAN BYARS 8/24/2010 ADOPTED	THE ARCHITECT/ENGINEER ASSUMES RESPONSIBILITY FOR APPROPRIATE USE OF THIS STANDARD.	STANDARD NO. 639S-1

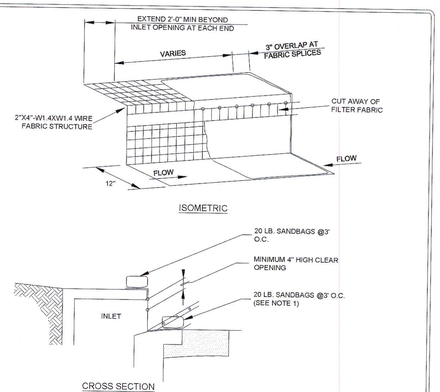

NOTES:

1. WHERE MINIMUM CLEARANCES CAUSE TRAFFIC TO DRIVE IN THE GUTTER, THE CONTRACTOR MAY SUBSTITUTE A 1" X 4" BOARD SECURED WITH CONCRETE NAILS 3' O.C. NAILED INTO THE GUTTER IN LIEU OF SANDBAGS TO HOLD THE FILTER DIKE IN PLACE. UPON REMOVAL, CLEAN ANY DIRT/DEBRIS FROM NAILING LOCATIONS. APPLY CHEMICAL SANDING AGENT AND APPLY NON-SHRINK GROUT FLUSH WITH SURFACE OF GUTTER.
2. A SECTION OF FILTER FABRIC SHALL BE REMOVED AS SHOWN ON THIS DETAIL OR AS DIRECTED BY THE ENGINEER OR DESIGNATED REPRESENTATIVE. FABRIC MUST BE SECURED TO WIRE BACKING WITH CLIPS OR HOG RINGS AT THIS LOCATION.
3. DAILY INSPECTION SHALL BE MADE BY THE CONTRACTOR AND SILT ACCUMULATION MUST BE REMOVED WHEN DEPTH REACHES 2".
4. CONTRACTOR SHALL MONITOR THE PERFORMANCE OF INLET PROTECTION DURING EACH RAINFALL EVENT AND IMMEDIATELY REMOVE THE INLET PROTECTIONS IF THE STORM-WATER BEGINS TO OVERTOP THE CURB.
5. INLET PROTECTIONS SHALL BE REMOVED AS SOON AS THE SOURCE OF SEDIMENT IS STABILIZED.

RECORD SIGNED COPY ON FILE AT PUBLIC WORKS APPROVED 03-25-11 DATE THE ARCHITECT/ENGINEER ASSUMES RESPONSIBILITY FOR THE APPROPRIATE USE OF THIS DETAIL (NOT TO SCALE)	CITY OF ROUND ROCK CURB INLET PROTECTION DETAIL	DRAWING NO. EC-14

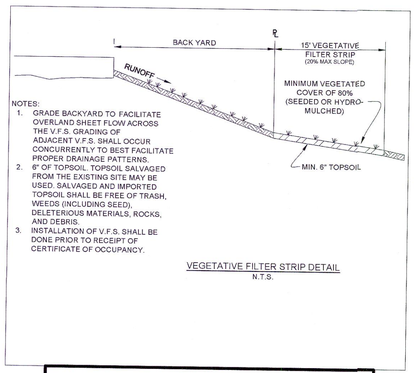

NOTES:

1. GRADE BACKYARD TO FACILITATE OVERLAND SHEET FLOW ACROSS THE V.F.S. GRADING OF ADJACENT V.F.S. SHALL OCCUR CONCURRENTLY TO BEST FACILITATE PROPER DRAINAGE PATTERNS.
2. 6" OF TOPSOIL. TOPSOIL SALVAGED FROM THE EXISTING SITE MAY BE USED. SALVAGED AND IMPORTED TOPSOIL SHALL BE FREE OF TRASH, WEEDS (INCLUDING SEED), DELETERIOUS MATERIALS, ROCKS, AND DEBRIS.
3. INSTALLATION OF V.F.S. SHALL BE DONE PRIOR TO RECEIPT OF CERTIFICATE OF OCCUPANCY.

VEGETATIVE FILTER STRIP DETAIL
N.T.S.

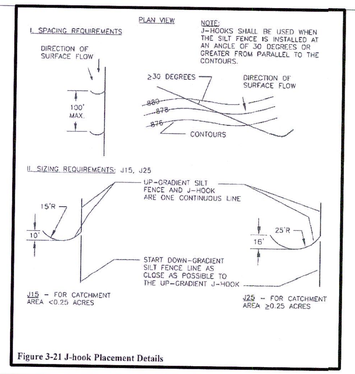

Figure 3-21 J-hook Placement Details

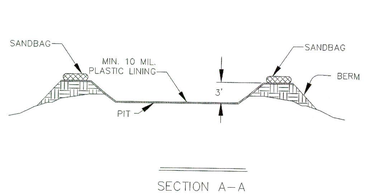

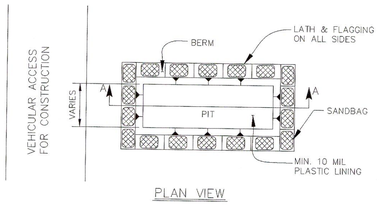

GENERAL NOTES:

1) Detail above illustrates minimum dimensions. Pit can be increased in size depending on expected frequency of use.
2) Washout pit shall be located in an area easily accessible to construction traffic.
3) Washout pit shall not be located in areas subject to inundation from storm water runoff.
4) Locate washout area at least 50 feet from sensitive features, storm drains, open ditches, or water bodies.
5) Temporary concrete washout facility should be constructed with sufficient quantity and volume to contain all liquid and concrete waste generated by washout operations.

MATERIALS:

1) Plastic lining material should be a minimum of 10 mil in polyethylene sheeting and should be free of holes, tears, or other defects that compromise the impermeability of the material.

INSPECTION AND MAINTENANCE GUIDELINES:

1) When temporary concrete washout facilities are no longer required for the work, the hardened concrete should be removed and disposed of.
2) Materials used to construct temporary concrete washout facilities should be removed from the site of the work and disposed of.
3) Holes, depressions or other ground disturbance caused by the removal of the temporary concrete washout facilities should be backfilled and repaired.

CONCRETE TRUCK WASHOUT PIT

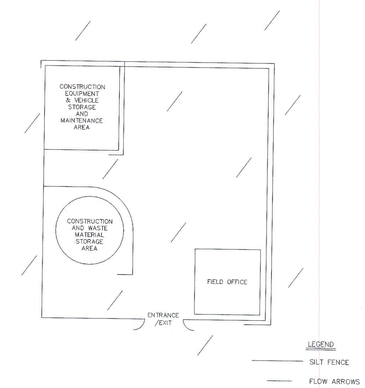

TYP. CONSTRUCTION STAGING AREA

NO.	REVISION	DATE

STATE OF TEXAS
JENNIFER C. FRANKLIN
118838
LICENSED PROFESSIONAL ENGINEER
9-25-24

PAPE-DAWSON ENGINEERS
AUSTIN | SAN ANTONIO | HOUSTON | FORT WORTH | DALLAS
10801 N MOPAC EXPY, BLDG 3, STE 200 | AUSTIN, TX 78759 | 512.454.8711
TBPE FIRM REGISTRATION #470 | TBPLS FIRM REGISTRATION #10028801

RANCHO DEL CIELO - PHASE 4B
WILLIAMSON COUNTY, TEXAS

EROSION & SEDIMENTATION CONTROL DETAILS

CITY JOB No.
JOB NO. 51118-61
DATE SEPTEMBER 2024
DESIGNER TS
CHECKED DRAWN CE/JM
SHEET 26 OF 36

Date: Sep 24, 2024, 4:05pm User ID: tstephens
File: H:\Projects\51118-61_Phase 3\50 Construction Documents\Civil\DT51118-61.dwg

THIS DOCUMENT HAS BEEN PRODUCED FROM MATERIAL THAT WAS STORED AND/OR TRANSMITTED ELECTRONICALLY AND MAY HAVE BEEN INADVERTENTLY ALTERED. RELY ONLY ON FINAL HARDCOPY MATERIALS BEARING THE CONSULTANT'S ORIGINAL SIGNATURE AND SEAL.

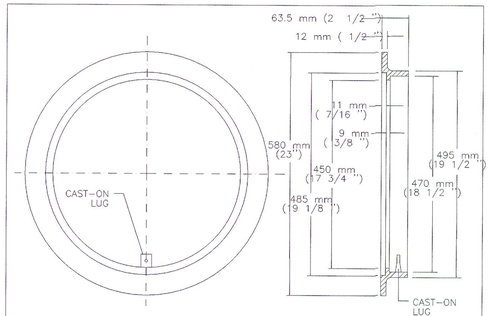

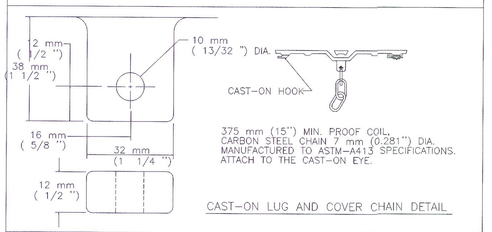

CITY OF AUTIN DEPARTMENT OF WATERSHED PROTECTION AND DEVELOPMENT REVIEW	457 mm (18") COVER AND FRAME	
RECORD COPY SIGNED BY GEORGE E. OSWALD 2/14/02 ADOPTED	THE ARCHITECT/ENGINEER ASSUMES RESPONSIBILITY FOR APPROPRIATE USE OF THIS STANDARD.	STANDARD NO. 503S-1 1 OF 2

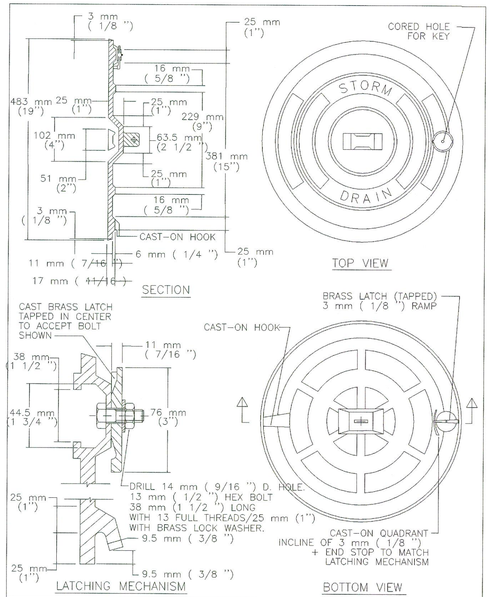

CITY OF AUTIN DEPARTMENT OF WATERSHED PROTECTION AND DEVELOPMENT REVIEW	457 mm (18") COVER AND FRAME	
RECORD COPY SIGNED BY GEORGE E. OSWALD 2/14/02 ADOPTED	THE ARCHITECT/ENGINEER ASSUMES RESPONSIBILITY FOR APPROPRIATE USE OF THIS STANDARD.	STANDARD NO. 503S-1 2 OF 2

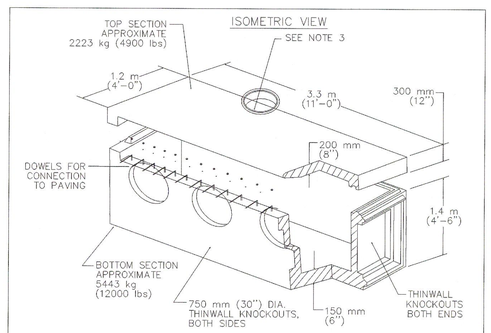

NOTES:
1. ALL CONCRETE SHALL BE CLASS "A" AS PER ITEM 403S.
2. ALL REINFORCING STEEL SHALL BE GRADE 60
3. MANHOLE FRAME AND COVER SHALL BE IN ACCORDANCE WITH CITY OF AUSTIN STANDARD 503S-1.
4. DIMENSIONS RELATING TO REINFORCING STEEL ARE TO CENTERS OF BARS.
5. IN AREAS OF CONFLICT BETWEEN REINFORCING STEEL, PIPES AND MANHOLE FRAME, THE REINFORCEMENT SHALL BE BENT OR ADJUSTED TO CLEAR AS DIRECTED BY THE ENGINEER.
6. PAYMENT FOR INLET AT THE CONTRACT PRICE SHALL INCLUDE THE TRANSITION CURB, IN ACCORDANCE WITH CITY OF AUSTIN STANDARD INLET DESIGN.
7. INVERT OF INLET SHALL BE SLOPED 1:20 WITH FILL CONCRETE BY CONTRACTOR, SHAPED AS "V" SECTION
8. THE INLET AS DESIGNED EXCEEDS THE REQUIREMENTS OF ASTM C478.
9. THIS STANDARD COMPLIES WITH THE CITY OF AUSTIN STANDARD SPECIFICATIONS ITEM NO. 508S.
10. FOR INLET CONNECTION VARIATIONS FOR MAKING A 6 m (20'-0") CURB INLET FROM STANDARD 3 m (10'-0") INLETS, SEE DALWORTH CURB INLET CONNECTION DETAIL SHEET DQ-86-103.

CITY OF AUTIN DEPARTMENT OF PUBLIC WORKS	CURB INLET 3 m (10') PRECAST TYPE 1 OR TYPE 1-R	
RECORD COPY SIGNED BY BILL GARDNER 12/09/08 ADOPTED	THE ARCHITECT/ENGINEER ASSUMES RESPONSIBILITY FOR APPROPRIATE USE OF THIS STANDARD.	STANDARD NO. 508S-4 1 OF 5

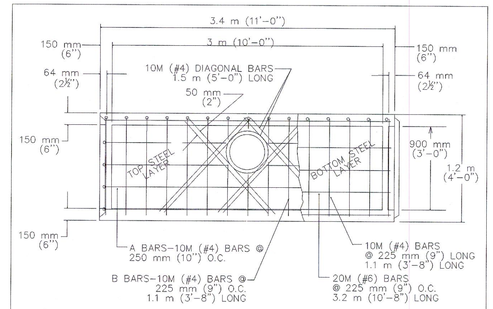

CITY OF AUTIN DEPARTMENT OF PUBLIC WORKS	CURB INLET 3 m (10') PRECAST TYPE 1 OR TYPE 1-R	
RECORD COPY SIGNED BY BILL GARDNER 12/09/08 ADOPTED	THE ARCHITECT/ENGINEER ASSUMES RESPONSIBILITY FOR APPROPRIATE USE OF THIS STANDARD.	STANDARD NO. 508S-4 2 OF 5

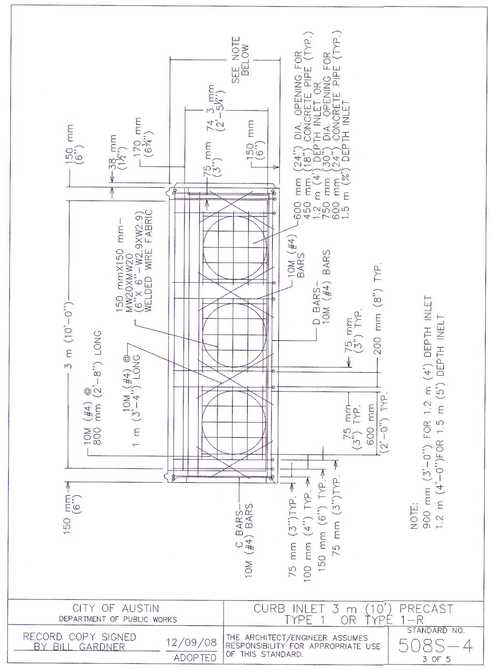

CITY OF AUTIN DEPARTMENT OF PUBLIC WORKS	CURB INLET 3 m (10') PRECAST TYPE 1 OR TYPE 1-R	
RECORD COPY SIGNED BY BILL GARDNER 12/09/08 ADOPTED	THE ARCHITECT/ENGINEER ASSUMES RESPONSIBILITY FOR APPROPRIATE USE OF THIS STANDARD.	STANDARD NO. 508S-4 3 OF 5

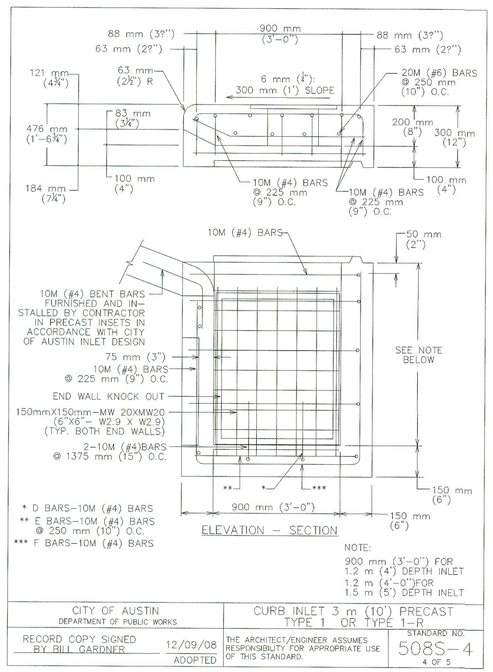

CITY OF AUTIN DEPARTMENT OF PUBLIC WORKS	CURB INLET 3 m (10') PRECAST TYPE 1 OR TYPE 1-R	
RECORD COPY SIGNED BY BILL GARDNER 12/09/08 ADOPTED	THE ARCHITECT/ENGINEER ASSUMES RESPONSIBILITY FOR APPROPRIATE USE OF THIS STANDARD.	STANDARD NO. 508S-4 4 OF 5

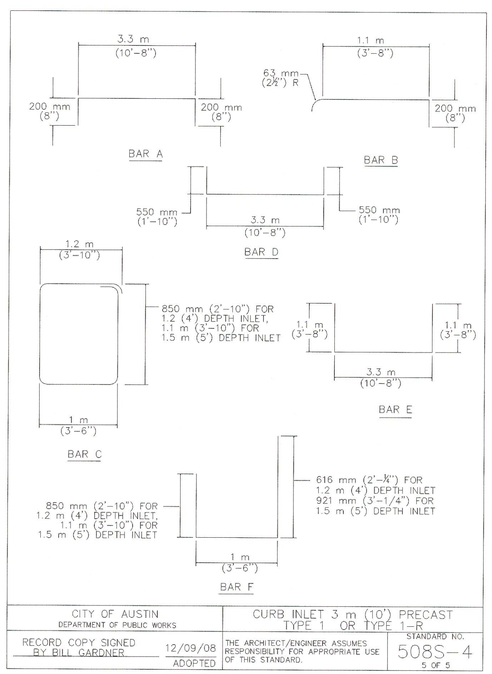

CITY OF AUTIN DEPARTMENT OF PUBLIC WORKS	CURB INLET 3 m (10') PRECAST TYPE 1 OR TYPE 1-R	
RECORD COPY SIGNED BY BILL GARDNER 12/09/08 ADOPTED	THE ARCHITECT/ENGINEER ASSUMES RESPONSIBILITY FOR APPROPRIATE USE OF THIS STANDARD.	STANDARD NO. 508S-4 5 OF 5

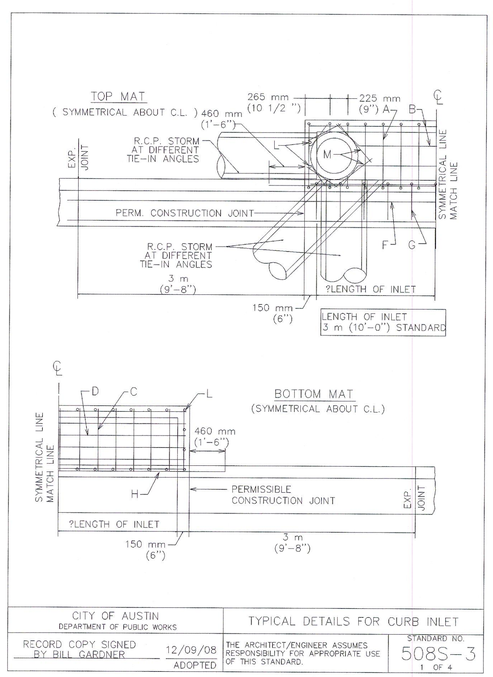

CITY OF AUTIN DEPARTMENT OF PUBLIC WORKS	TYPICAL DETAILS FOR CURB INLET	
RECORD COPY SIGNED BY BILL GARDNER 12/09/08 ADOPTED	THE ARCHITECT/ENGINEER ASSUMES RESPONSIBILITY FOR APPROPRIATE USE OF THIS STANDARD.	STANDARD NO. 508S-3 1 OF 4

NO.	REVISION	DATE

STATE OF TEXAS
JENNIFER C. FRANKLIN
118838
LICENSED
PROFESSIONAL ENGINEER
9-25-24

PAPE-DAWSON ENGINEERS
AUSTIN | SAN ANTONIO | HOUSTON | FORT WORTH | DALLAS
10801 N. MOPAC EXPY., BLDG 3, STE 200 | AUSTIN, TX 78759 | 512.454.8711
TBPE FIRM REGISTRATION #470 | TBPLS FIRM REGISTRATION #10028801

RANCHO DEL CIELO - PHASE 4B
WILLIAMSON COUNTY, TEXAS

DRAINAGE DETAILS 1 OF 3

CITY JOB No. 51118-61
JOB NO. 51118-61
DATE SEPTEMBER 2024
DESIGNER TS
CHECKED DRAWN CE/JM
SHEET 30 OF 36

Date: Sep 24, 2024, 4:06pm User ID: tstephens
File: H:\Projects\51118\60_Phase 5\301 Construction Documents\Civil\DT51118-61.dwg

THIS DOCUMENT HAS BEEN PRODUCED FROM MATERIAL THAT WAS STORED AND/OR TRANSMITTED ELECTRONICALLY AND MAY HAVE BEEN INADVERTENTLY ALTERED. RELY ONLY ON FINAL HARDCOPY MATERIALS BEARING THE CONSULTANT'S ORIGINAL SIGNATURE AND SEAL.

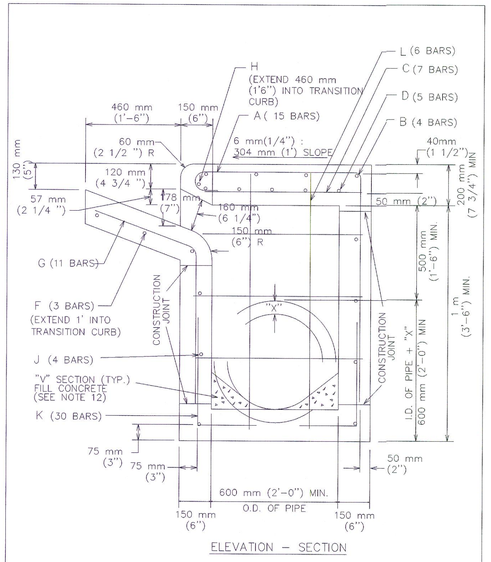

ELEVATION – SECTION

CITY OF AUSTIN DEPARTMENT OF PUBLIC WORKS	TYPICAL DETAILS FOR CURB INLET	
RECORD COPY SIGNED BY BILL GARDNER 12/09/08 ADOPTED	THE ARCHITECT/ENGINEER ASSUMES RESPONSIBILITY FOR APPROPRIATE USE OF THIS STANDARD.	STANDARD NO. 508S–3 2 OF 4

TABLE OF QUANTITIES
FOR 18" OUTLET PIPE
REINFORCING STEEL QUANTITIES

BARS	SIZE	SPACING	NUMBER	LENGTH	WEIGHT
A	4	230mm (9")*	15	2 m (7'–0")	73
B	4	250 mm (10")	4	3.25 m (10'–8")	29
C	4	460 mm (18")	7	760 mm (2'–6")	12
D	6	150 mm (6")	5	3.25 m (10'–8")	80
E	4	300 mm (12")	6	760 mm (2'–6")	10
F	4	250 mm (10")	3	4 m (13'–0")	35
G	4	300 mm (12")	11	1.25 m (4'–3")	31
H	6	–	1	4.25 m (14'–0")	20
J	4	300 mm (12")	7	3.25 m (10'–8")	50
K	4	230 mm (9")*	30	800 mm (2'–7 1/2")	52
L	4	300 mm (12")*	6	1.3 m (4'–4")	17
M	4	–	4	500 mm (1'–8") AVG	4
TOTAL STEEL, LB.					413
TOTAL CONCRETE, C.Y.					4.06

* EXCEPT AS SHOWN ON PLAN

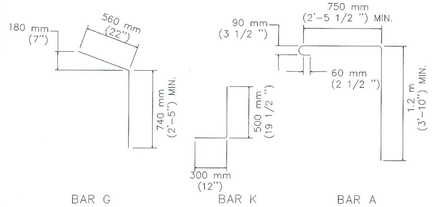

BAR G BAR K BAR A

CITY OF AUSTIN DEPARTMENT OF PUBLIC WORKS	TYPICAL DETAILS FOR CURB INLET	
RECORD COPY SIGNED BY BILL GARDNER 12/09/08 ADOPTED	THE ARCHITECT/ENGINEER ASSUMES RESPONSIBILITY FOR APPROPRIATE USE OF THIS STANDARD.	STANDARD NO. 508S–3 3 OF 4

NOTES:
1. ALL CONCRETE SHALL BE CLASS "A"
2. ALL REINFORCING STEEL SHALL BE GRADE 60
3. DIMENSIONS RELATING TO REINFORCING STEEL ARE TO CENTERS OF BARS.
4. VERTICAL STEEL MAY BE SPLICED (380 mm or 15" MIN. LAP) IN THE LOWER ONE–HALF OF ALL INLET WALLS.5. IN AREAS OF CONFLICT BETWEEN REINFORCING STEEL, PIPES AND MANHOLE FRAME, THE REINFORCEMENT SHALL BE BENT OR ADJUSTED TO CLEAR AS DIRECTED BY THE ENGINEER.
6. QUANTITIES SHOWN HEREON ARE FOR THE CONTRACTOR'S INFORMATION ONLY. PAYMENT WILL BE MADE FOR EACH INLET OF THE TYPE SPECIFIED, COMPLETE IN PLACE INCLUDING MANHOLE FRAME AND OVER.
7. CHAMFER ALL EXPOSED EDGES 20 mm (3/4 ").
8. MANHOLE FRAME AND COVER SHALL BE IN ACCORDANCE WITH CITY OF AUSTIN STANDARD 503S–1.
9. THE CONTRACTOR MAY PROPOSE ALTERNATE PROCEDURES FOR THE CONSTRUCTION OF INLETS, INCLUDING PRECAST UNITS. PLANS FOR SUCH PROPOSED ALTERNATES SHALL BE SUBMITTED TO THE ENGINEER FOR REVIEW AND APPROVAL BEFORE CONSTRUCTION.
10. ALL INLET WALLS SHALL BE FORMED EXCEPT WHERE THE NATURE OF THE SURROUNDING MATERIAL IS SUCH THAT IT CAN BE TRIMMED TO A SMOOTH VERTICAL FACE. WHEN INLET WALLS ARE PLACED TO NEAT EXCAVATION LINES THE WALL THICKNESS SHALL NOT EXCEED 10 INCHES.
11. PAYMENT FOR INLET AT THE CONTRACT PRICE SHALL INCLUDE THE TRANSITION CURB.
12. INVERT OF INLET SHALL BE SLOPED 1:20 WITH FILL CONCRETE, SHAPED AS "V" SECTION.
13. NO SPLICING OF REINFORCING STEEL SHALL BE PERMITTED UNLESS OTHERWISE NOTED ON THE PLANS OR PERMITTED IN WRITING BY THE ENGINEER.

REFERENCES:

FOR EXPANSION JOINT DOWEL AND DOWEL LOCATION DETAILS SEE STD. 430S–3, "CURB EXPANSION JOINT DOWEL DETAIL".

FOR 18" MANHOLE FRAME AND COVER DETAILS SEE STD. 503S–1, "18" COVER AND FRAME".

CITY OF AUSTIN DEPARTMENT OF PUBLIC WORKS	TYPICAL DETAILS FOR CURB INLET	
RECORD COPY SIGNED BY BILL GARDNER 12/09/08 ADOPTED	THE ARCHITECT/ENGINEER ASSUMES RESPONSIBILITY FOR APPROPRIATE USE OF THIS STANDARD.	STANDARD NO. 508S–3 4 OF 4

MINIMUM RIP–RAP QUANTITIES	
PIPE	SQ. YDS.
18"	6.2
24"	6.9
27"	7.8
30"	9.5
36"	10.4
42"	12.0
48"	14.3
54"	16.4

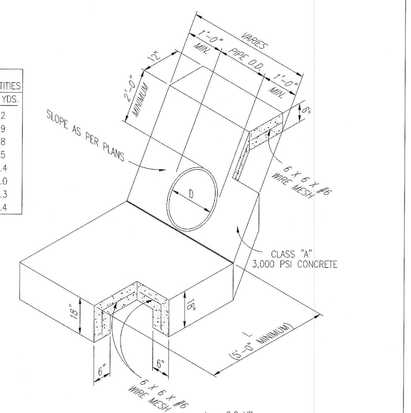

L = 0.2 VD
L = APRON LENGTH, FEET
V = CULVERT DISCHARGE VELOCITY FT/SEC.
D = HEIGHT OF BOX CULVERT OR DIAMETER OF PIPE CULVERT, FEET.

NOTES:
1. WHEN HEADWALLS AND WINGWALLS ARE REQUIRED, THEY SHALL CONFORM TO THE TEXAS DEPARTMENT OF TRANSPORTATION STANDARDS, OR AS DIRECTED BY THE CITY.
2. ENERGY DISSIPATERS SHALL BE REQUIRED IF PIPE VELOCITY IS GREATER THAN 5.0 F.P.S. OR AS DIRECTED BY THE CITY OF PFLUGERVILLE.
3. THE LENGTH OF THE CONCRETE APRON SHALL BE DETERMINED BY THE EQUATION LISTED ABOVE.

ISSUE DATE: FEBRUARY 2005	CITY OF PFLUGERVILLE	DWG. #SD–19
REVISIONS	TYP. CONCRETE RIP–RAP AT PIPE	SD20.DWG
DATE APPROVED DRAWN	CONSTRUCTION STANDARDS AND DETAILS	
SCALE: N.T.S.		

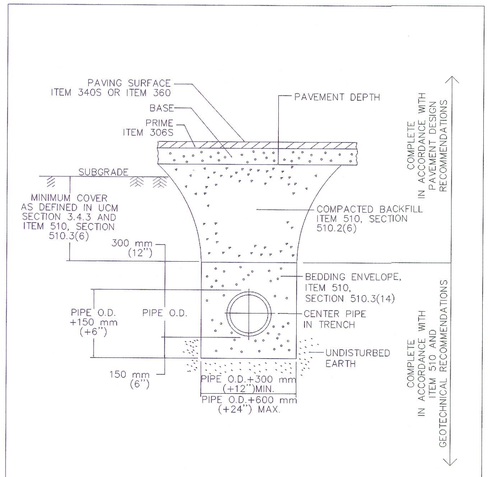

REFERENCES:
1. UTILITY CRITERIA MANUAL SECTION 3.4.3, "FINAL DESIGN"
2. STANDARD SPECIFICATION MANUAL ITEM 510, SECTION 510.2(6), "SELECT BACKFILL OR BORROW"; SECTION 510.3(6), "TRENCH DEPTH AND DEPTH OF COVER"; SECTION 510.3(14), "PIPE BEDDING ENVELOPE"

CITY OF AUSTIN DEPARTMENT OF PUBLIC WORKS	TYPICAL DETAIL FOR PROPOSED STREET	
RECORD COPY SIGNED BY BILL GARDNER 03/13/06 ADOPTED	THE ARCHITECT/ENGINEER ASSUMES RESPONSIBILITY FOR APPROPRIATE USE OF THIS STANDARD.	STANDARD NO. 510S–4

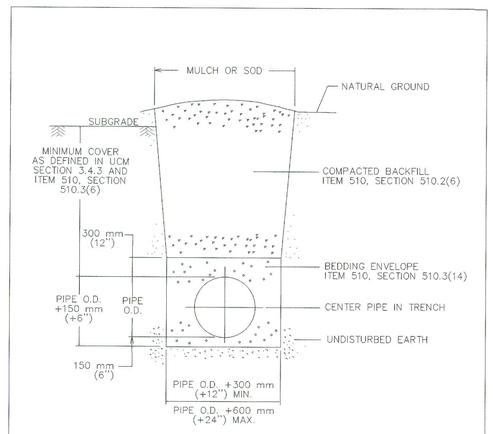

REFERENCES:
1. UTILITY CRITERIA MANUAL SECTION 3.4.3, "FINAL DESIGN"
2. STANDARD SPECIFICATION MANUAL ITEM 510, SECTION 510.2(6), "SELECT BACKFILL OR BORROW"; SECTION 510.3(6), "TRENCH DEPTH AND DEPTH OF COVER"; SECTION 510.3(14), "PIPE BEDDING ENVELOPE"

CITY OF AUSTIN DEPARTMENT OF PUBLIC WORKS	TYPICAL TRENCH DETAIL WITH UNFINISHED SURFACE	
RECORD COPY SIGNED BY BILL GARDNER 03/13/06 ADOPTED	THE ARCHITECT/ENGINEER ASSUMES RESPONSIBILITY FOR APPROPRIATE USE OF THIS STANDARD.	STANDARD NO. 510S–5

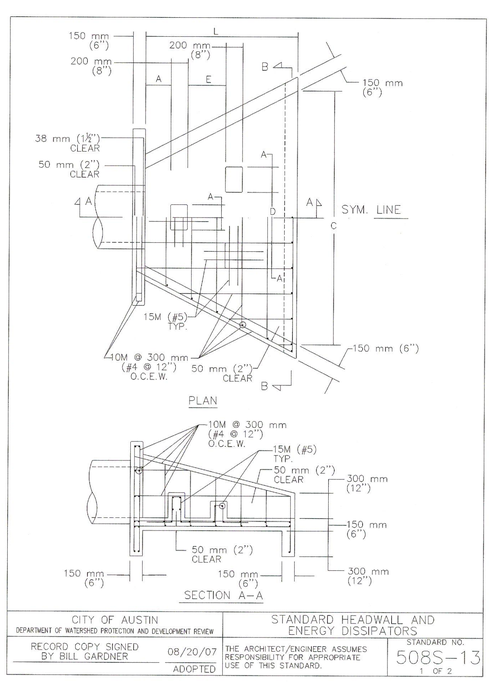

CITY OF AUSTIN DEPARTMENT OF WATERSHED PROTECTION AND DEVELOPMENT REVIEW	STANDARD HEADWALL AND ENERGY DISSIPATORS	
RECORD COPY SIGNED BY BILL GARDNER 08/20/07 ADOPTED	THE ARCHITECT/ENGINEER ASSUMES RESPONSIBILITY FOR APPROPRIATE USE OF THIS STANDARD.	STANDARD NO. 508S–13 1 OF 2

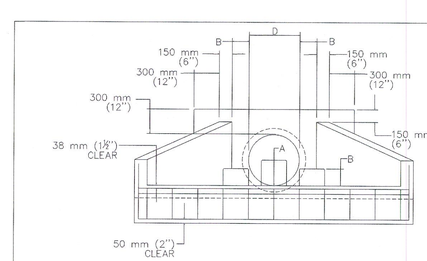

SECTION B–B

NOTES:
1. ALL CONCRETE SHALL BE TYPE "C" AS PER SPEC. 403S, CONCRETE FOR STURCTURES.
2. CHAMFER ALL EXTERNAL VISIBLE CORNERS.
3. DISSIPATOR BLOCKS REQUIRED ON DISCHARGE HEADWALLS ONLY.

D	457 mm (18")	533 mm (21")	610 mm (24")	685 mm (27")	765 mm (30")	838 mm (33")	914 mm (36")	1.067 m (42")	1.219 m (48")	1.372 m (54")	1.524 m (60")
A	225 mm (9")	250 mm (10")	300 mm (12")	350 mm (14")	375 mm (15")	400 mm (16")	450 mm (18")	525 mm (21")	600 mm (24")	675 mm (27")	750 mm (30")
B	150 mm (6")	175 mm (7")	200 mm (8")	225 mm (9")	250 mm (10")	275 mm (11")	300 mm (12")	350 mm (14")	400 mm (16")	450 mm (18")	500 mm (20")
C	2.29 m (90")	2.67 m (105")	3.05 m (120")	3.43 m (135")	3.81 m (150")	4.19 m (165")	4.57 m (180")	5.33 m (210")	6.10 m (240")	6.86 m (270")	7.62 m (300")
L	1.37 m (54")	1.60 m (63")	1.83 m (72")	2.06 m (81")	2.29 m (90")	2.51 m (99")	2.74 m (108")	3.20 m (126")	3.66 m (144")	4.11 m (162")	4.57 m (180")
E	300 mm (12")	350 mm (14")	400 mm (16")	450 mm (18")	500 mm (20")	550 mm (22")	600 mm (24")	700 mm (28")	800m (32")	900 mm (36")	1000 mm (40")

DIMENSIONS IN MILLIMETERS, METERS AND (INCHES).
DISCHARGE VELOCITIES GREATER THAN 3 METERS/SECOND (10 fps) REQUIRE ROCK OUTLET PROTECTION.

CITY OF AUSTIN DEPARTMENT OF WATERSHED PROTECTION AND DEVELOPMENT REVIEW	STANDARD HEADWALL AND ENERGY DISSIPATORS	
RECORD COPY SIGNED BY BILL GARDNER 08/20/07 ADOPTED	THE ARCHITECT/ENGINEER ASSUMES RESPONSIBILITY FOR APPROPRIATE USE OF THIS STANDARD.	STANDARD NO. 508S–13 2 OF 2

NO.	REVISION	DATE

STATE OF TEXAS
JENNIFER C. FRANKLIN
118838
LICENSED PROFESSIONAL ENGINEER
9-25-24

PAPE-DAWSON ENGINEERS
AUSTIN | SAN ANTONIO | HOUSTON | FORT WORTH | DALLAS
10801 N MOPAC EXPY., BLDG 3, STE 200 | AUSTIN, TX 78759 | 512.454.8711
TBPE FIRM REGISTRATION #470 | TBPLS FIRM REGISTRATION #10028801

RANCHO DEL CIELO - PHASE 4B
WILLIAMSON COUNTY, TEXAS

DRAINAGE DETAILS 2 OF 3

CITY JOB No.
JOB NO. 51118–61
DATE SEPTEMBER 2024
DESIGNER TS
CHECKED DRAWN CE/JM
SHEET 31 OF 36

Date: Sep 24, 2024, 4:06pm User ID: tstephens
File: I:\Projects\51118\401 Phase 3\300 Construction Documents\Civil\051118-61.dwg

THIS DOCUMENT HAS BEEN PRODUCED FROM MATERIAL THAT WAS STORED AND/OR TRANSMITTED ELECTRONICALLY AND MAY HAVE BEEN INADVERTENTLY ALTERED. RELY ONLY ON FINAL HARDCOPY MATERIALS BEARING THE CONSULTANT'S ORIGINAL SIGNATURE AND SEAL.

Special Specification 4216
Thermoplastic Pipe Culverts and Drains

1. DESCRIPTION

Furnish and install thermoplastic pipe for constructing thermoplastic pipe culverts and drains. In this Specification, all reference to thermoplastic pipe includes all pipe, joints, and fitting materials. Provide pipes of the sizes, types, design, and dimensions shown on the plans including the connections and joints to new or existing pipes, storm sewer, manholes, inlets, headwalls, and other appurtenances as required to complete the work. Use of this Specification requires concrete end treatment attached including concrete headwalls, wingwalls, and floor on exposed ends of pipe.

2. MATERIALS

Manufacturing plants must be approved in accordance with DMS-4710, "Thermoplastic Pipe, Joints, and Fittings" before furnishing thermoplastic pipe for Department projects. The Department's Material Producer List (MPL) has a list of approved manufacturing plants and products.

Unless otherwise specified on the plans furnish materials in accordance with the following:

- DMS-4710, "Thermoplastic Pipe, Joints, and Fittings"
- Item 400, "Excavation and Backfill for Structures"
- Item 401, "Flowable Backfill."

Provide excavatable flowable backfill when Item 401 is specified.

2.1. **Inspection.** The quality of materials, the process of manufacture, and the finished pipe will be subject to inspection and approval at the manufacturing plant. In addition, the finished pipe will be subject to further random inspection at the project site before and during installation.

2.2. **Joints.** Install the joints so that the connection of the pipe sections forms a continuous line free from irregularities in the flow line. If no joint type is specified, provide a soil-tight joint meeting the requirements of DMS-4710.

3. CONSTRUCTION

Construct the pipe at locations shown on the plans or as directed. Only trench installation of thermoplastic pipe will be permitted. Handle, store, place, joint, backfill plans, and as specified within.

3.1. **Contractor Submittals.** Submit to the Engineer the following documentation upon delivery of material.

- **Certificate of Compliance.** Submit a certificate of compliance of pipe product to the Department with the following information, manufacturing plant, date of manufacture, pipe dimensions, pipe stiffness, pipe flattening, brittleness, ASTM resin cell classification, and workmanship.
- **Installation Specifications.** Provide manufacturer's installation specifications to Engineer before beginning work. Include maximum fill depth and backfill requirements in manufacturer's installation specifications.

3.2. **Marking.** Install only pipe that is clearly marked at maximum 10 ft. intervals and clearly mark all couplings with:

- manufacturer's name or trademark,
- nominal size,
- specification designation (i.e., AASHTO M 294 or AASHTO M 330),

existing structures; moving and reusing headwalls where required; removing and disposing of portions of existing structures as required; cutting of pipe ends on skew; inspection and testing; and labor, tools, equipment, and incidentals.

Excavation, shaping, bedding, and backfill will be paid for in accordance with Item 400.

Flowable backfill will be paid in accordance with Item 401.

Concrete end treatments will be paid in conformance with other items on the plans.

- manufacturing plant's designation code, and
- date manufactured.

3.3. **Excavation.** Excavate in accordance with Item 400.

Provide enough trench width for the pipe installation to ensure adequate working room to properly and safely place and compact materials placed under haunches of the pipe and other embedment materials. Provide space between the pipe and trench wall that is greater than that of the compaction equipment used.

If ground water is encountered, de-water the trench before placing and backfilling the pipe. However, restrain pipe to maintain elevation and alignment if water exists in trench when allowed by the Engineer for wet placement.

Maintain trench shoring system above pipe haunch zone to not disturb during shoring removal. Correct excavation and backfill if disturbed to reestablish the integrity of the bedding and backfill specified herein.

When using flowable backfill, the minimum allowable trench width is the pipe outside diameter plus 12 in.

When using a granular or a cement stabilized backfill, the minimum allowable trench width is specified in Table 1.

Table 1
Minimum Trench Width (Granular and Cement Stabilized Backfill

Nominal Pipe Diameter (in.)	Minimum Trench Width (in.)
18	39
24	48
36	66
42	75
48	84

3.4. **Installing Pipe in Embankment.** If any portion of the pipe projects above the existing ground line, construct an embankment as shown on the plans or as directed, for a minimum distance outside each side of the pipe location of five times the diameter and to a minimum elevation of 2 ft. above the top of the pipe. Excavate the trench to a width as specified in Section 3.3., "Excavation."

3.5. **Bedding.** Bed the pipe in a foundation of cohesionless material, such as sand, crushed stone, or pea gravel, with a maximum allowable size of 3/8 in. Provide bedding with 4 in. minimum thickness unless subgrade contains large rocks in which increase to minimum of 6 in. Compact the bedding except the width of one third the width of pipe diameter directly under the centerline of the pipe – leave this region loose (uncompacted).

3.6. **Handling and Storing Pipe.** Store pipe above ground on adequate blocking. Always keep pipe clean and fully drained during storage. Provide proper equipment for hoisting and lowering the pipe into the trench without damaging the pipe or disturbing the bedding or the walls of the trench. Any protective covering of gaskets should remain until the pipe is ready for installation.

3.7. **Laying Pipe.** Unless otherwise authorized, start laying pipe on the bedding at the outlet end with the separate sections firmly joined together. Hold and lower sections of pipe into the trench without damaging the pipe or disturbing the bedding or the sides of the trench. Remove and re-lay any pipe that is not in alignment or that shows excessive settlement after laying, at no expense to the Department.

Lay multiple installation of thermoplastic pipe with the centerlines of the individual barrels parallel. Unless otherwise shown on the plans, maintain the clear distances between outer surfaces of adjacent pipes shown in Table 2:

Table 2
Minimum Clear Distance Between Pipes

Nominal Pipe Diameter (in.)	Min. Clear Distance Between Pipes (in.)
18	14
24	17
30	20
36	23
42	26
48	29

3.8. **Reusing Existing Appurtenances.** When existing appurtenances are specified on the plans for reuse, sever the portion to be reused from the existing culvert and move it to the new position previously prepared, by approved methods.

Provide connections conforming to the requirements for joining sections of pipes as indicated in this Specification or as shown on the plans. Restore any headwalls and any aprons or pipes attached to the headwall that are damaged during moving operations, to their original condition, at no expense to the Department. The Contractor has the option to remove and dispose of the existing headwalls and aprons and construct new headwalls at no expense to the Department, in conformance with the pertinent specifications and design indicated on the plans or as furnished.

3.9. **Pipe Jointing.** Follow pipe manufacturer's installation specifications when joining pipes together. Remove gasket protective film just before joining pipes. Provide suitable protection to the push end of the pipe if force is applied to end of pipe to obtain required overlap. Do not damage pipe during pipe joining operations. At a minimum, achieve the minimum specified overlap of the two pipes within the connection. Do not over join pipes to disrupt flow line inside of pipe. Suitable joints are:

- **Integral Bell and Spigot.** Ensure the bell overlaps a minimum of two corrugations of the spigot end when fully engaged. Provide the spigot end with an O-ring gasket in accordance with ASTM F477.
- **Exterior Bell and Spigot.** Fully weld the bell to the exterior of the pipe and overlap the spigot end so that the flow lines and ends match when fully engaged. Provide the spigot end with an O-ring gasket in accordance with ASTM F477.
- **Split Couplers.** For soil-tight joint connections only. Join pipe with coupling bands covering at least two full corrugations on the ends of each pipe being joined.

3.10. **Sewer Connections and Stub Ends.** Make connections of pipe sewer to existing sewers or sewer appurtenances as shown on the plans or as directed. Mortar or concrete the bottom of the existing structures, if necessary, to eliminate any drainage pockets created by the new connection. Where the sewer is connected into existing structures which are to remain in service, restore any damage to the existing structure resulting from making the connections to the satisfaction of the Engineer. Seal stub ends, for connections to future work not shown on the plans, by installing watertight plugs into the free end of the pipe. Include the cost for the above at cost of the pipe.

3.11. **Backfilling.** Backfill from the pipe bedding up to 12 in. above the top of the pipe to provide necessary structural support to the pipe and control pipe deflection. Take care when placing and compacting the backfill material to not damage pipe. Adjust backfilling operations if pipe is being moved out of alignment, is causing pipe distortion, or disrupting joint tightness. Remove backfill around problem areas and restore pipe section before continuing to backfill. Provide uniform backfill material and uniform compacted density throughout the length of the pipe, to avoid unequal pressure. Use care to ensure proper backfill under the pipe, in the haunch zone.

Provide type of backfill as shown on the plans. When granular material is specified, provide backfill consisting of hard, durable, clean granular material that is free of organic matter, clay lumps, and other deleterious matter. Provide backfill meeting the gradation requirements shown in Table 3.

Table 3
Gradation Requirements for Granular Backfill Material

Sieve Size	Percent Retained (Cumulative)
1 in.	0-5
7/8 in.	0-35
1/2 in.	0-75
3/8 in.	0-95
No. 4	35-100
No. 10	60-100
No. 200	90-100

Place the backfill in accordance with Item 400 or Item 401 and as supplemented below.

- **Granular Backfill.** Place in uniform layers a minimum 6 in. deep (loose measurement), wet if required, and thoroughly compact it between adjacent structures and between the structure and the sides of the trench. Hand place, if necessary, under the pipe in haunch zone to ensure complete filling and support. Limit compaction to hand-operated tamping equipment to compact backfill within the region 12 in. either side of the pipe and between pipes. Place filter fabric between the native soil and the backfill unless otherwise shown on the plans. Use filter fabric conforming to the requirements of DMS-6200, "Filter Fabric," Type 1.
- **Cement Stabilize Backfill.** Place and compact to completely fill all voids. Hand place, if necessary, under the pipe in haunch zone to ensure complete filling and support.
- **Flowable Backfill.** Place in a manner that will not result in uplift of the pipe or restrain pipe enough to maintain constant grade flowline at required elevation. Place across the entire width of the trench and maintain a minimum depth of 12 in. above the pipe. Wait a minimum of 24 hr. before backfilling the remaining portion of the trench with other backfill material in accordance with Item 400, unless strength information for the flowable fill is available and strength exceeds 100 psi compressive strength.

Inspect inside periphery of pipe for local or unequal deformation caused by improper construction methods during backfilling. Stop work and address backfilling technique if measured deflection of pipe exceeds 5% or there are other issues found effecting quality of pipe installation.

To validate pipe installation methods, perform an initial quality control inspection after first installation of each size of pipe is completed on the project. Notify the Engineer when this inspection takes place.

3.12. **Protecting the Pipe.** Unless otherwise shown on the plans or permitted in writing, do not use heavy earth-moving equipment over the structure until a minimum of 4 ft. of permanent or temporary compacted fill is placed over the top of the structure.

4. INSPECTION OR ACCEPTANCE

4.1. **Inspection.** Visually inspect the pipes for damage, deflection (out of roundness), joint tightness, evidence of soil intrusion, and vertical alignment (ponding). If the pipe run is 30 ft. or less in length, not under a public roadway, and the initial visual inspection did not indicate any deflection or other deficiencies, additional testing described below will be waived, unless otherwise noted. Provide high intensity lights, laser distant measuring devices, and other equipment to facilitate visual inspection.

Perform final inspection a minimum of 30 days after the backfill has been completed or earlier as needed to allow roadway surfacing when approved. Have two test mandrels available for each size of pipe. Size mandrels based on the manufacturer's average inside diameter and field verified based on a proving ring. Provide metal mandrels with at least nine fixed fins evenly distributed around the circumference. Pull mandrel sized at 95% the diameter of the pipe through the entire length. If the 95% mandrel cannot be pulled entirely through, pull a mandrel 92.5% the pipe diameter through the pipe. Additionally, if the 95% mandrel cannot be pulled entirely through the pipe or there is a substantial disruption in ease of mandrel movement through the pipe, visually inspect installed pipe utilizing a remote operated camera mounted on vehicle or sled able to

move through the pipe. Check for joint separation, cracks, tears, buckling, deflection, and out of roundness, evidence of soil intrusion and vertical alignment (ponding water).

Notify the Engineer when inspections are to occur. The Department will provide inspection form to be used. Document process and findings and return form to the Engineer.

4.2. **Remediation.** Develop a plan to address all deficiencies of joint separation, damage, evidence of soil intrusion, vertical alignment, and where pipe deflection exceeds 5% of the nominal diameter.

- **Joints.** Remediate pipe showing evidence of crushing at the joints. Note differential movement, improper joint sealing, movement or settlement of pipe sections, and leakage in the inspection report. Remediate joint separation of greater than 1 in. Repair or replace pipe sections where soil migration through the joint is occurring.
- **Cracks or Tears.** Remediate cracks or splits in the interior wall of the pipe. Use remediation methods in conformance with recommendations of the pipe manufacturer and accepted and authorized by the Engineer.
- **Buckling, bulging, and racking.** Note in the inspection report flat spots or dents at the crown, sides, or fowline of the pipe due to racking. Note areas of wall buckling and bulging in the inspection report. The Engineer will determine if corrective action is necessary.
- **Deflection.** Where pipe deflection exceeds 5% of the nominal diameter, submit to the Engineer for review and approval an evaluation utilizing a Professional Engineer taking into consideration the severity of the deflection, structural integrity, environmental conditions, and the design service life of the pipe. Remediate or replace pipe where the evaluation finds the deflection could be problematic or where pipe deflection exceeds 7.5% of the nominal diameter.

5. END TREATMENT

Install concrete end sections per requirements of the plans. End section must include concrete headwall, wings, and floor. Reference the following for this work:

- Item 466, "Headwalls and Wingwalls"
- Item 467, "Safety End Treatment."

6. MEASUREMENT

This Item will be measured by the foot. Measurement will be made between the ends of the pipe barrel along the flow line, not including safety end treatments. Measurement of spurs, branches, or connections to existing pipe will be made from the intersection of the flow line with the outside surface of the pipe into which it connects.

Where inlets, headwalls, catch basins, manholes, junction chambers, or other structures are included in lines of pipe, the length of pipe lying into the structure wall will be included for measurement, but no other portion of the structure length or width will be included.

For multiple pipes, the measured length will be the sum of the lengths of the barrels.

This is a plans quantity measurement item. The quantity to be paid for is the quantity shown in the proposal unless modified by Article 9.2., "Plans Quantity Measurement." Additional measurements or calculations will be made if adjustments of quantities are required.

7. PAYMENT

The work performed and materials furnished, in accordance with this Item and measured as provided under "Measurement," will be paid for at the unit price bid for "Thermoplastic Pipe" of the size and type specified. This price is "full compensation for furnishing, hauling, placing, and joining pipes; connecting to new or

DMS-4710
Thermoplastic Pipes, Joints, and Fittings

Effective Date: November 2022

1. DESCRIPTION

This Specification governs for the product evaluation, manufacturer, and material requirements for thermoplastic materials. Thermoplastic pipes, joints, and, fittings including High Density Polyethylene (HDPE) and Polypropylene (PE) materials, are intended for use as pipe culverts and drains up to 48 in. in diameter with up to 20 ft. of fill.

2. MATERIAL PRODUCER LIST

The Department maintains a Material Producer List (MPL) of thermoplastic pipes, joints, and fittings manufacturing plants and materials conforming to the requirements of this Specification. Thermoplastic materials used on Department projects must be produced by manufacturing plants listed on the approved MPL. Thermoplastic materials listed on the approved MPL, for listed manufacturers, will be considered for use subject to the conditions of each project.

3. QUALIFICATION PROCEDURE

3.1. **Qualification Request.** Thermoplastic materials will be evaluated based on the material type, design, durability and service life methodology, test results, and construction and installation methods. Submit a request for evaluation under DMS-4710 to DMS_PrequalBids@txdot.gov.

Include the following material information in the request:

- company name,
- physical and mailing addresses,
- contact person, phone number, and email address,
- an overview of the system including system theory and development history,
- durability (corrosion, construction damage, environmental) design procedures and service life for each thermoplastic material type,
- detailed construction and installation manual,
- maximum fill height,
- case histories of the use of the pipe on highway projects, and
- copy of manufacturer's current certificate of compliance for AASHTO's National Transportation Product Evaluation Program (NTPEP) Committee Work Plan for Evaluation of Manufacturers of the submitted thermoplastic drainage materials.

3.2. **Evaluation.** The Department will review the submittal and request clarification or additional information as necessary.

3.2.1. **Qualification.** If approved for Department use, the Department will add the material to the MPL for consideration of use subject to the project conditions.

Report any changes in the composition or manufacturing process of any material to AASHTO-NTPEP and the Department. Changes in composition or manufacturing process may require a re-evaluation of the performance and resubmittal of a NTPEP certificate of compliance before use on Department projects. The

Department representatives reserves the right to conduct whatever tests it deems necessary to identify a qualified material and determine if there has been a change in the composition, manufacturing process, or quality that may affect the qualified material's durability or performance. In case of variance, the Department representatives' tests will govern.

3.2.2. **Failure.** Manufacturers not qualified under this Specification may not furnish materials for use on Department projects.

Manufacturers failing to qualify may submit a request for re-evaluation after 6 mo. have elapsed from the date of the original request. The Department may modify this time limit at its discretion. In the request for re-evaluation, document the cause of the failure issue and corrective action taken.

3.3. **Periodic Evaluation.** The Department representatives reserves the right to conduct random sampling and testing of material or product to verify performance and Specification compliance and to perform random audits of the manufacturing plant including all documentation. Department representatives may sample material from the manufacturing plant and the project site.

Failure of materials to comply with the requirements of this Specification as a result of periodic evaluation may be cause for removal of those materials from the MPL. In case of variance, the Department's representatives' tests will govern.

3.4. **Disqualification.** Causes for disqualification and removal from the MPL may include, but are not limited to:

- failure to maintain the applicable AASHTO-NTPEP certificate of compliance,
- failure to report any change in material composition or manufacturing process to AASHTO-NTPEP,
- repetitive poor quality and workmanship of the material or repetitive poor installation,
- failure to provide safe access or allow Department representatives to perform any unannounced inspections or audit of any manufacturing process, documentation, or material produced,
- falsification of or incomplete documentation, or
- furnishing material to Department projects that fails to meet specifications.

The Department will remove disqualified producers from the MPL and will not allow submission of material for re-qualification for 6 mo., at the discretion of the Department.

All previously produced material assigned to the Department will be subject to review and removal from Department assigned inventory. For the remaining material needed on active projects, the Contractor or the disqualified manufacturer must choose another Department-approved manufacturer currently listed on the MPL for the specific material specified to supply the material. The Contractor is responsible for any delays, product price increases, or other costs related to the manufacture disqualification.

Re-Qualification. Once the disqualification period established by the Department has elapsed, producers disqualified and removed from the MPL may begin the re-qualification process by submitting a request in accordance with Section 3.1., "Qualification Request," including additional documentation identifying the cause of the problem and corrective action taken. The re-qualification process will then follow all subsequent Sections of Article 3, "Qualification Procedure."

4. MATERIAL REQUIREMENTS

4.1. **High Density Polyethylene (HDPE) Pipe, Joints, and Fittings.**

4.1.1. **Manufacturer.** Manufacturers of HDPE drainage pipe must comply with the AASHTO-NTPEP Committee Work Plan for Evaluation of HDPE Thermoplastic Drainage Pipe Manufacturers. Qualified manufacturers must also maintain and submit a current AASHTO-NTPEP certificate of compliance.

4.1.2. **General.** Provide HDPE materials meeting the requirements of AASHTO M 294.

4.1.3. **Raw Materials.** Provide HDPE materials manufactured from virgin polyethylene (PE) resin compounds, conforming to the requirements of cell class 435400C as defined and described in ASTM D3350, except that the maximum allowable carbon black content is 4%. Use PE resin compound meeting the slow-crack-growth resistance according to the NCLS test set forth in AASHTO M 294.

4.1.4. **Designation Type.** For HDPE pipe used in gravity flow drainage applications, provide Type S (outer corrugated wall with smooth inner liner).

4.1.5. **Section Properties.** Provide the minimum wall thickness of the inner walls of Type S pipe as specified in AASHTO M 294, Section 7.2.2. Meet the pipe stiffness at 5% deflection requirement as specified in AASHTO M 294, Section 7.4. The minimum section properties must meet the 75-yr. design life requirements in the AASHTO LRFD Bridge Design Specifications, Section 12.

4.2. **Polypropylene Pipe, Joints, and Fittings.**

4.2.1. **Manufacturer.** Manufacturers of polypropylene drainage materials must comply with the AASHTO-NTPEP Committee Work Plan for Evaluation of Polypropylene Drainage Pipe Manufacturers. Qualified manufacturers must also maintain and submit a current AASHTO-NTPEP certificate of compliance.

4.2.2. **General.** Provide polypropylene materials meeting the requirements of AASHTO M 330.

4.2.3. **Raw Materials.** Provide polypropylene compounds used to manufacture the materials that meet the minimum properties of AASHTO M 330, Section 6.1.1.

4.2.4. **Designation Type.** For polypropylene pipe used in gravity flow drainage applications, provide Type S (outer corrugated wall with smooth inner liner).

4.2.5. **Section Properties.** Provide the minimum wall thickness of the inner walls of Type S pipe as specified in AASHTO M 330, Section 7.2.2. Meet the pipe stiffness at 5% deflection requirement as specified in AASHTO M 330, Section 7.4. The minimum section properties must meet the 75-yr. design life requirements in the AASHTO LRFD Bridge Design Specifications, Section 12.

4.3. **Joints and Fittings.**

4.3.1. **General. Provide joints and fittings meeting the following requirements:**

- **Integral Bell and Spigot.** Ensure the bell overlaps a minimum of two corrugations of the spigot end when fully engaged. Provide the spigot end with an O-ring gasket in accordance with ASTM F477.
- **Exterior Bell and Spigot.** Fully weld the bell to the exterior of the pipe and overlap the spigot end so that the flow lines and ends match when fully engaged. Provide the spigot end with an O-ring gasket in accordance with ASTM F477.
- **Split Couplers.** For soil-tight joint connections only. Join pipe with coupling bands covering at least two full corrugations on the ends of each pipe being joined.

4.3.2. **Definitions.** Joint and fitting type definitions are the following:

- **Soil-tight Joints.** Joints meeting the definition in AASHTO *Standard Specifications for Highway Bridges*, Section 26.4.2.4.
- **Watertight Joints.** Joints meeting the requirements of ASTM D3212.

4.4. **Marking.** Furnish pipe clearly marked at maximum 10 ft. intervals and clearly mark all fittings and couplings with:

- manufacturer's name or trademark,
- nominal size,
- specification designation (i.e., AASHTO M 294 or AASHTO M 330),

- manufacturing plant's designation code, and
- date manufactured.

4.5. **Documentation.** Include a certificate of compliance with each shipment. Provide a certificate including the following information: manufacturing plant, date manufactured, pipe dimensions, pipe stiffness, pipe flattening, brittleness, ASTM resin cell classification, and workmanship.

THIS DOCUMENT HAS BEEN PRODUCED FROM MATERIAL THAT WAS STORED AND/OR TRANSMITTED ELECTRONICALLY AND MAY HAVE BEEN INADVERTENTLY ALTERED. RELY ONLY ON FINAL HARDCOPY MATERIALS BEARING THE CONSULTANT'S ORIGINAL SIGNATURE AND SEAL.

Date: Sep 24, 2024, 4:06pm User ID: tstephens
File: H:\Projects\51118\06\Phase 3\03 Construction Documents\Civil\DT51118-61.dwg

NO. REVISION DATE

STATE OF TEXAS
JENNIFER C. FRANKLIN
118838
LICENSED
PROFESSIONAL ENGINEER
9.9.24

PAPE-DAWSON ENGINEERS
AUSTIN | SAN ANTONIO | HOUSTON | FORT WORTH | DALLAS
10801 N MOPAC EXPY, BLDG 3, STE 200 | AUSTIN, TX 78759 | 512.454.8711
TBPE FIRM REGISTRATION #470 | TBPLS FIRM REGISTRATION #10028801

RANCHO DEL CIELO - PHASE 4B
WILLIAMSON COUNTY, TEXAS
DRAINAGE DETAILS 3 OF 3

CITY JOB No.
JOB NO. 51118-61
DATE SEPTEMBER 2024
DESIGNER TS
CHECKED DRAWN CE/JM
SHEET 32 OF 36

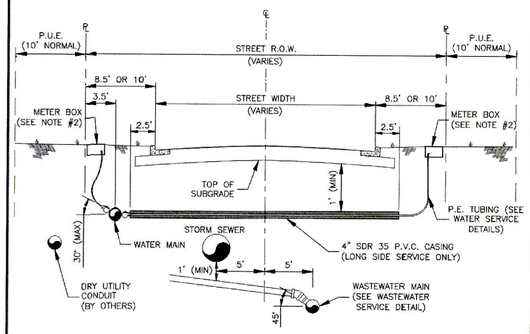

NOTES:

1. REFER TO WATER AND WASTEWATER SERVICE CONNECTION DETAILS FOR SERVICE SPECIFICS.
2. METER BOXES SHALL BE SET AS CLOSE TO R.O.W. (℄) AS POSSIBLE, WITH NO PART OF BOX LOCATED WITHIN P.U.E.
3. WASTEWATER SERVICE LATERALS SHALL BE SET AS CLOSE TO R.O.W. (℄) AS POSSIBLE, WITH NO PART OF THE CLEANOUT STACK LOCATED WITHIN THE P.U.E.
4. WATER AND WASTEWATER SERVICE CONNECTIONS SHALL BE LOCATED ON OPPOSING SIDES OF RESIDENTIAL LOTS WHEREVER POSSIBLE.
5. WATER MAINS SHALL BE LOCATED ON THE HIGH SIDE OF THE STREET WHEREVER POSSIBLE.

Scale: NTS Date Issued: 10/17/22	SONTERRA MUNICIPAL UTILITY DISTRICT JARRELL, TEXAS	
SONTERRA	TYPICAL UTILITY ASSIGNMENT DETAIL	STANDARD DETAIL G-01

NON-PAVED SURFACE:

(A) PROVIDE 4" OF TOPSOIL AND REVEGETATE

(B) PROVIDE COMPACTED BACKFILL IN SITU TRENCH MATERIAL FREE OF ROCK AND CLODS GREATER THAN 4", COMPACTED IN 6" LIFTS, TO 95%

PROPOSED PAVED SURFACE:

SUBGRADE PREP, FLEXIBLE BASE AND H.M.A.C. PER PAVEMENT PLANS, UNDER SEPARATE PROCEDURE

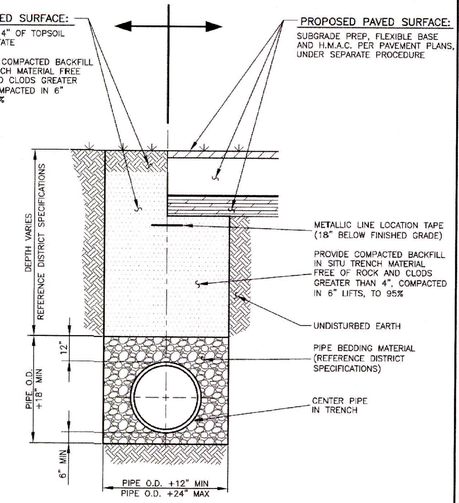

NOTES:

1. ALL TRENCHING AND TRENCH SAFETY SHALL COMPLY WITH APPLICABLE FEDERAL, STATE AND LOCAL REGULATIONS.
2. DETECTOR TAPE TO BE LABELED "WATER", "GRAVITY SEWER", OR PRESSURIZED WASTEWATER" AS APPROPRIATE.

Scale: NTS Date Issued: 10/17/22	SONTERRA MUNICIPAL UTILITY DISTRICT JARRELL, TEXAS	
SONTERRA	WATER AND WASTEWATER MAIN BEDDING AND SURFACE REPAIR DETAIL	STANDARD DETAIL G-02

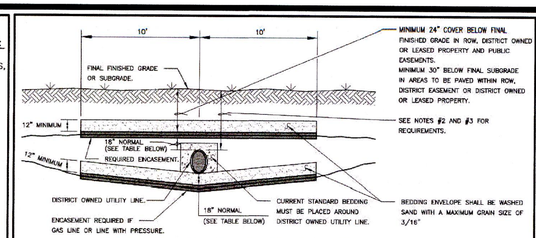

NOTE: NORMALLY, CROSSINGS GO UNDER DISTRICT OWNED LINES WITH LESS THAN 60" OF COVER.

UTILITY MINIMUM CLEARANCE TABLE

	DISTRICT OWNED LINE SIZE	CROSSING (AS NEAR 90° AS POSSIBLE)	PARALLEL ROUTES
POTABLE WATERLINES	LESS THAN ~ 6"	12"	36"
	6" ~ 36"	18"	48"
	LARGER	24"	72"
RECYCLE AND WASTEWATER LINES	LESS THAN ~ 6"	12"	36"
	6" ~ 36"	18"	48"
	LARGER	24"	60"
STORMWATER LINES	LESS THAN ~ 18"	12"	24"
	18" ~ 60"	18"	36"
	LARGER	24"	60"

NOTES:

1. ALL TRENCH SAFETY SHALL COMPLY WITH APPLICABLE FEDERAL, STATE AND LOCAL REGULATIONS.
2. AN ENCASED (SEE NOTE #7) UTILITY LINE/CLUSTER WITH SAND BEDDING, WILL BE ALLOWED TO CROSS OVER A DISTRICT OWNED UTILITY LINE THAT HAS 60" OF COVER OR MORE, PROVIDED THERE IS COMPLIANCE WITH THE CLEARANCE, INSTALLATION AND COVER FROM FINAL SURFACE GRADE SHOWN ON THIS DETAIL. CLEARANCE STANDARDS CAN BE FOUND IN THE UTILITY MINIMUM CLEARANCE TABLE SHOWN ON THIS SHEET AND MINIMUM COVER IS SHOWN ON THE DETAIL SKETCH FOR EACH TYPE OF TRENCH (IN UNPAVED AREAS, IN EXISTING PAVEMENT AND IN AREAS WHERE PAVEMENT IS PROPOSED).
3. IF THE DISTRICT LINE IS LARGE (36"+ POTABLE WATERLINE, RECYCLE LINE OR WASTEWATER LINE, 60"+ STORMWATER LINE) AND/OR HAS LESS THAN 60" OF COVER WITH SPECIAL SITE CONDITIONS, DETAILED PLANS WITH WRITTEN JUSTIFICATION FOR CROSSING OVER A PROPOSED OR EXISTING DISTRICT OWNED LINE, MUST BE SUBMITTED FOR APPROVAL A MINIMUM OF 10 DAYS BEFORE PROPOSED INSTALLATION.
4. NO ENCASEMENT (SAND BEDDING ONLY) IS REQUIRED WHERE THE UTILITY CROSSES UNDER THE DISTRICT OWNED UTILITY LINE, EXCEPT FOR A GAS LINE, OR LINE WITH PRESSURE, WHICH MUST BE ENCASED. CLEARANCE STANDARDS COMPLIANCE REQUIRED.
5. WHERE THERE IS KNOWN GROUND WATER, PLANS MUST BE SUBMITTED, THAT SHOW AN ACCEPTABLE CONTROL OF THE WET CONDITION.
6. ENCASEMENT IN THESE CROSSINGS, MUST BE: SCH. 40 STEEL OR SCH. 80 PVC OR GREATER IN ADDITION TO THE CONDUIT ON ELECTRICAL LINES WITH MORE THAN 120V TO GROUND, ALL GAS LINES, ALL FIBER OPTIC CABLES AND ALL TELEPHONE CABLES WITH MORE THAN 100 PRS.

Scale: NTS Date Issued: 10/17/22	SONTERRA MUNICIPAL UTILITY DISTRICT JARRELL, TEXAS	
SONTERRA	UTILITY CROSSING INSTALLATION DETAIL	STANDARD DETAIL G-03

SERVICE CONNECTION MATERIAL LIST:

A. SERVICE CLAMP REQUIRED.
B. 1" CORPORATION STOP – SERVICE PIPE OUTLET.
C. 1" SERVICE PIPE.
D. LOCKING ANGLE METER STOP; SERVICE PIPE INLET X SWIVEL COUPLING NUT OUTLET:
- FOR 5/8" AND 3/4" METERS: 1" X 3/4"
- FOR 1" METERS: 1" X 1"

E. PLASTIC RECTANGULAR METER BOX. (SEE TABLE BELOW)
F. PIPE CASING WHERE APPLICABLE. (AS PER DETAIL G-01)

METER INSTALLATION MATERIAL LIST:

G. WATER METER, CENTERED IN BOX. (SEE TABLE BELOW)
H. WATER METER COUPLING; MALE I.P.T. X SWIVEL COUPLING NUT:
- FOR 5/8" AND 3/4" METERS: 3/4" X 8 1/2" LONG.
- FOR 1" METERS: LENGTH OF PIPE TO BE DETERMINED BY CONTRACTOR. EXTEND PIPE TO 4"–6" OUTSIDE OF METER BOX.

I. BRONZE GATE VALVE: NON-RISING STEM (3/4" OR 1") FEMALE I.P.T. (PROPERTY OWNERS CUT-OFF OUTSIDE METER BOX IN SEPARATE VALVE CAN WITH LID).
J. 3/4" OR 1" PIPE MEETING LOCAL PLUMBING CODE REQUIREMENTS.

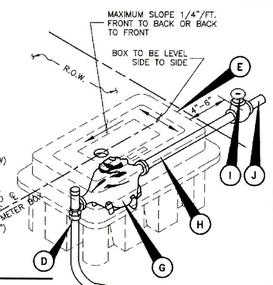

NOTES:

1. SERVICE PIPE SHALL BE 200 PSI BLACK COLORED POLYETHYLENE HAVING A DIMENSION RATIO OF 9 (DR9).
2. SERVICE SADDLES SHALL BE WRAPPED COMPLETELY WITH 8 MIL. POLYETHYLENE FILM.
3. TOP OF BOXES SHALL BE 1" ABOVE FINISHED GRADE.
4. ALL FITTINGS, PIPING, AND TUBING SHALL BE INSTALLED IN ACCORDANCE WITH MANUFACTURER'S RECOMMENDATIONS AND LOCAL PLUMBING CODE.
5. AXIS OF METER ASSEMBLY (LINE THROUGH METER STOP, METER, PIPING AND OWNERS CUTOFF) SHALL BE 10" BELOW TOP OF BOX.
6. SLOTS PROVIDED IN METER BOX TO ACCOMODATE PIPING INTO AND OUT OF BOX, SHALL NOT BE MODIFIED.
7. LOCATION OF METER BOXES SHALL BE SUBJECT TO THE APPROVAL OF THE DISTRICT.

PART NUMBER	SERIES	SIZE	HEIGHT	WIDTH	LENGTH
DFW36C–BODY*	36C	STANDARD	12–1/4"	TOP = 13–3/4"	TOP = 19"
DFW36C–SBSM*	36C	STANDARD	12–1/4"	BASE = 10"	BASE = 18–1/4"
DFW36C–SBSM–LID*	36C	STANDARD	1–3/4"	LID = 10"	LID = 15"

* ROTEC BY DFW PLASTICS INCORPORATED OR APPROVED EQUAL.

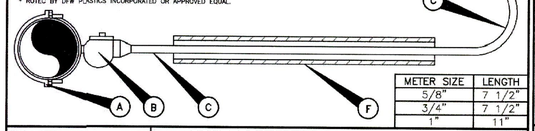

METER SIZE	LENGTH
5/8"	7 1/2"
3/4"	7 1/2"
1"	11"

Scale: NTS Date Issued: 10/17/22	SONTERRA MUNICIPAL UTILITY DISTRICT JARRELL, TEXAS	
SONTERRA	SINGLE 5/8", 3/4", OR 1" WATER METER DETAIL	STANDARD DETAIL W-01

SERVICE CONNECTION MATERIAL LIST:

A. SERVICE CLAMP REQUIRED.
B. 1 1/2" CORPORATION STOP (TYPICAL) – SERVICE PIPE OUTLET.
C. 1 1/2" SERVICE PIPE (TYPICAL).
D. BRANCH CONNECTION: 1 1/2" OR 2" SERVICE PIPE INLET AND 2 3/4" MALE I.P.T. OUTLETS 7 1/2" O.C.
E. 3/4" LOCKING ANGLE METER STOP; FEMALE I.P.T. INLET AND SWIVEL COUPLING NUT OUTLET.
F. PLASTIC RECTANGULAR METER BOX. (SEE TABLE BELOW)
G. PIPE CASING WHERE APPLICABLE. (AS PER DETAIL G-01)

METER INSTALLATION MATERIAL LIST

H. WATER METERS, CENTERED IN BOX. (SEE TABLE BELOW)
I. WATER METER COUPLING; MALE I.P.T. X SWIVEL COUPLING NUT.
- LENGTH OF PIPE TO BE DETERMINED BY CONTRACTOR.
- EXTEND PIPE TO 4"–6" OUTSIDE OF METER BOX.

J. BRONZE GATE VALVE: NON-RISING STEM (3/4" OR 1") FEMALE I.P.T. (PROPERTY OWNERS CUT-OFF OUTSIDE METER BOX IN SEPARATE VALVE CAN WITH LID).
K. 3/4" OR 1" PIPE MEETING LOCAL PLUMBING CODE REQUIREMENTS.

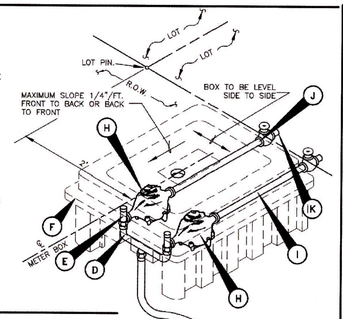

NOTES:

1. SERVICE PIPE SHALL BE 200 PSI BLACK COLORED POLYETHYLENE HAVING A DIMENSION RATIO OF 9 (DR9).
2. SERVICE SADDLES SHALL BE WRAPPED COMPLETELY WITH 8 MIL. POLYETHYLENE FILM.
3. TOP OF BOXES SHALL BE 1" ABOVE FINISHED GRADE.
4. ALL FITTINGS, PIPING AND TUBING SHALL BE INSTALLED IN ACCORDANCE WITH MANUFACTURER'S RECOMMENDATIONS AND LOCAL PLUMBING CODE.
5. AXIS OF METER ASSEMBLY (LINE THROUGH METER STOP, METER, PIPING AND OWNERS CUTOFF) SHALL BE 10" BELOW TOP OF BOX.
6. SLOTS PROVIDED IN METER BOX TO ACCOMODATE PIPING INTO AND OUT OF BOX, SHALL NOT BE MODIFIED.
7. BRANCH CONNECTION AND BOTH ANGLE METER STOPS MUST BE INSTALLED PRIOR TO FIRST METER INSTALLATION EVEN THOUGH THE SECOND PROPERTY MAY NOT BE READY FOR SERVICE.
8. LOCATION OF METER BOXES SHALL BE SUBJECT TO THE APPROVAL OF THE DISTRICT.

PART NUMBER	SERIES	SIZE	HEIGHT	WIDTH	LENGTH
DFW38C–14–BODY*	38C	LARGE	14–1/4"	TOP = 21–1/4"	TOP = 33"
DFW38C–14–SBSM*	38C	LARGE	14–1/4"	BASE = 17–1/4"	BASE = 18"
DFW38C–SBSM–LID*	38C	LARGE	2"	LID = 17"	LID = 18"

* ROTEC BY DFW PLASTICS INCORPORATED OR APPROVED EQUAL.

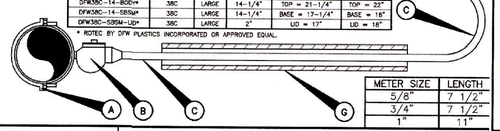

METER SIZE	LENGTH
5/8"	7 1/2"
3/4"	7 1/2"
1"	11"

Scale: NTS Date Issued: 10/17/22	SONTERRA MUNICIPAL UTILITY DISTRICT JARRELL, TEXAS	
SONTERRA	DUAL 5/8", 3/4", OR 1" WATER METER DETAIL	STANDARD DETAIL W-02

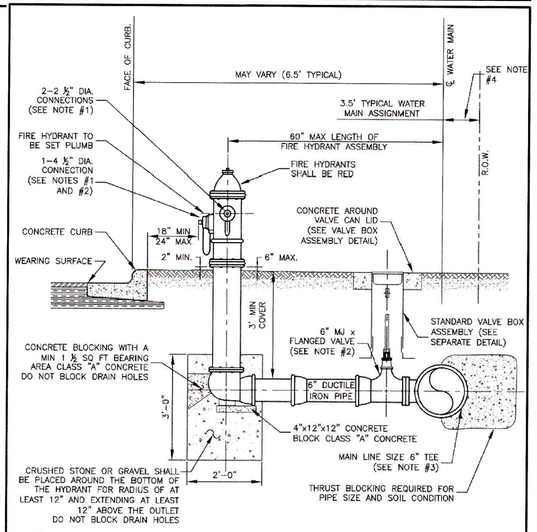

NOTES:

1. THREADS ON OUTLET NOZZLES SHALL BE NATIONAL STANDARD THREAD.
2. CONTRACTOR SHALL FURNISH AND INSTALL 'STORZ' TYPE ADAPTERS ON THE FIRE HYDRANT 4.5" CONNECTION.
3. TEE MAY HAVE FLANGED OUTLET FOR M.J. X FLANGED GATE VALVE OR, ANCHOR (SWIVEL) TEE MAY BE USED WITH M.J. X M.J. GATE VALVE.
4. WATER MAIN MAY BE DEFLECTED TO A 2.5' OFFSET INSIDE R.O.W. AT FIRE HYDRANT LOCATIONS.

Scale: NTS Date Issued: 10/17/22	SONTERRA MUNICIPAL UTILITY DISTRICT JARRELL, TEXAS	
SONTERRA	FIRE HYDRANT ASSEMBLY DETAIL	STANDARD DETAIL W-03

NOTE:
1. CONTRACTOR SHALL FURNISH AND INSTALL STORZ TYPE ADAPTORS ON THE FIRE HYDRANT 4.5-INCH CONNECTIONS (1 PER HYDRANT).

* MODIFIED REFERENCE STREET SECTION & UTILITY ASSIGNMENT & NOTE 1 ON THIS SHEET FOR DETAILS.

NO. REVISION DATE

STATE OF TEXAS
JENNIFER C. FRANKLIN
118838
LICENSED
PROFESSIONAL ENGINEER
9-25-24

PAPE-DAWSON ENGINEERS
AUSTIN | SAN ANTONIO | HOUSTON | FORT WORTH | DALLAS
10801 N MOPAC EXPY, BLDG 3, STE 200 | AUSTIN, TX 78759 | 512.454.8711
TBPE FIRM REGISTRATION #470 | TBPLS FIRM REGISTRATION #10028801

RANCHO DEL CIELO - PHASE 4B
WILLIAMSON COUNTY, TEXAS
WATER DETAILS 1 OF 2

CITY JOB No.
JOB NO. 51118-61
DATE SEPTEMBER 2024
DESIGNER TS
CHECKED DRAWN CE/JM
SHEET 33 OF 36

Date: Sep 24, 2024, 4:07pm User ID: tstephens
File: H:\Projects\511\18\60_Phase 5.301 Construction Documents\Civil\D751118-61.dwg

THIS DOCUMENT WAS BEEN PRODUCED FROM MATERIAL THAT WAS STORED AND/OR TRANSMITTED ELECTRONICALLY AND MAY HAVE BEEN INADVERTENTLY ALTERED. RELY ONLY ON FINAL HARDCOPY MATERIALS BEARING THE CONSULTANT'S ORIGINAL SIGNATURE AND SEAL.

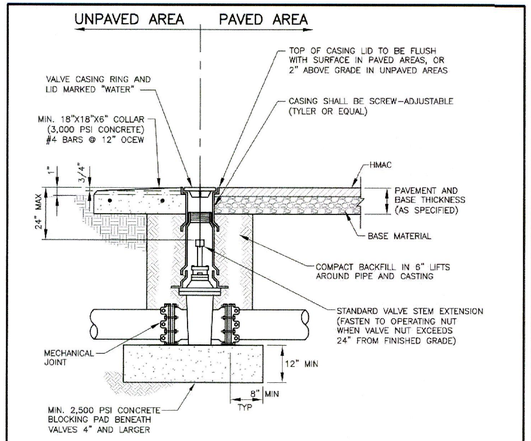

NOTES:

1. VALVE CASING, RING, LID, ETC., SHALL BE DESIGNED FOR HS-20 LOADING WHERE INSTALLED IN PAVED AREAS.

Scale: NTS
Date Issued: 10/17/22

SONTERRA MUNICIPAL UTILITY DISTRICT
JARRELL, TEXAS

SONTERRA

BURIED VALVE, VALVE BOX, & COVER DETAIL

STANDARD DETAIL W-04

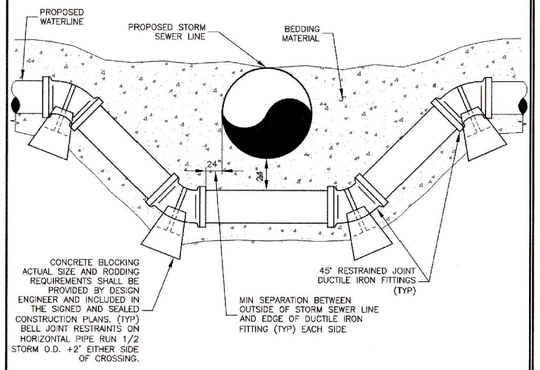

NOTES:

1. ALL DUCTILE IRON FITTINGS SHALL BE WRAPPED WITH MINIMUM 8 MIL POLYETHYLENE (BLACK POLY) AND OPEN ENDS/SEAMS SEALED WITH DUCT TAPE.
2. ALL FITTINGS SHALL HAVE RESTRAINED JOINTS AND BLOCKED WITH CONCRETE BLOCKING.

Scale: NTS
Date Issued: 10/17/22

SONTERRA MUNICIPAL UTILITY DISTRICT
JARRELL, TEXAS

SONTERRA

WATERLINE AND STORM SEWER LINE CROSSING DETAIL

STANDARD DETAIL W-05

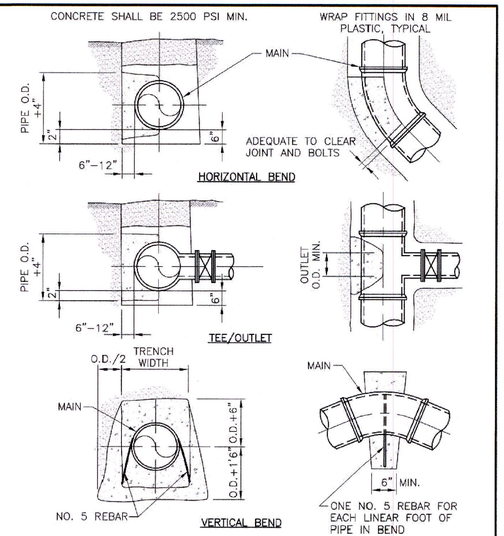

THRUST BLOCK DESIGN AS FOLLOWS:

A. PIPELINE PRESSURE OF 150 PSI (ACTUAL IF HIGHER) +50% SURGE ALLOWANCE

B. MAXIMUM SOIL BEARING PRESSURE

SOIL TYPE	BEARING PRESSURE
ROCK:	4000 LBS/SQ FT
UNDISTURBED SOIL:	2000 LBS/SQ FT
LOOSE SOIL:	1500 LBS/SQ FT

Scale: NTS
Date Issued: 10/17/22

SONTERRA MUNICIPAL UTILITY DISTRICT
JARRELL, TEXAS

SONTERRA

THRUST BLOCK DETAIL

STANDARD DETAIL W-08

NO.	REVISION	DATE

STATE OF TEXAS
JENNIFER C. FRANKLIN
116838
LICENSED
PROFESSIONAL ENGINEER
9-25-24

PAPE-DAWSON ENGINEERS
AUSTIN | SAN ANTONIO | HOUSTON | FORT WORTH | DALLAS
10801 N MOPAC EXPY, BLDG 3, STE 200 | AUSTIN, TX 78759 | 512.454.8711
TBPE FIRM REGISTRATION #470 | TBPLS FIRM REGISTRATION #10028801

RANCHO DEL CIELO - PHASE 4B
WILLIAMSON COUNTY, TEXAS

WATER DETAILS 2 OF 2

CITY JOB No.
JOB NO. 51118-61
DATE SEPTEMBER 2024
DESIGNER TS
CHECKED DRAWN CE/JM
SHEET 34 OF 36

Date: Sep 24, 2024, 4:07pm User ID: tstephens
File: H:\Projects\51118.60\A_Phase 4\50 Construction Documents\Civil\D751118-61.dwg
THIS DOCUMENT HAS BEEN PRODUCED FROM MATERIAL THAT WAS STORED AND/OR TRANSMITTED ELECTRONICALLY AND MAY HAVE BEEN INADVERTENTLY ALTERED. RELY ONLY ON FINAL HARDCOPY MATERIALS BEARING THE CONSULTANT'S ORIGINAL SIGNATURE AND SEAL.

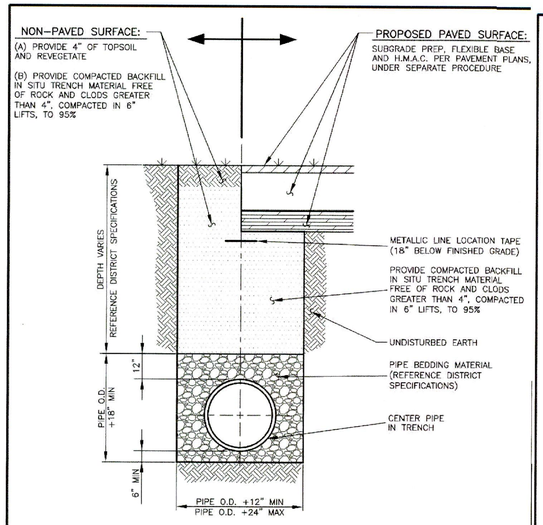

NOTES:

1. ALL TRENCHING AND TRENCH SAFETY SHALL COMPLY WITH APPLICABLE FEDERAL, STATE AND LOCAL REGULATIONS.
2. DETECTOR TAPE TO BE LABELED "WATER", "GRAVITY SEWER", OR PRESSURIZED WASTEWATER" AS APPROPRIATE.

Scale: NTS	SONTERRA MUNICIPAL UTILITY DISTRICT JARRELL, TEXAS	
Date Issued: 10/17/22	WATER AND WASTEWATER MAIN BEDDING AND SURFACE REPAIR DETAIL	STANDARD DETAIL G-02

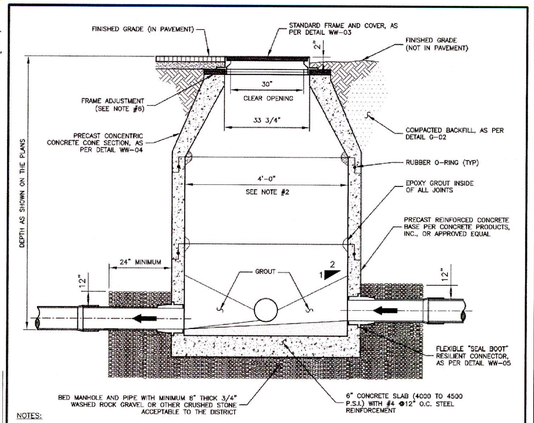

NOTES:

1. REFERENCE DETAIL WW-02 FOR DROP CONNECTIONS GREATER THAN 6 INCHES.
2. SEE CONSTRUCTION PLANS FOR MANHOLE SIZE, LOCATION, CONFIGURATION, TYPE OF TOP SECTION, VENTING REQUIREMENTS, PIPE SIZES AND TYPES. MANHOLES SHALL BE 5' DIAMETER ON LINES LARGER THAN 12" AND/OR DEEPER THAN 16' FROM FINISHED GRADE.
3. MANHOLES SHALL BE PRECAST ASTM C478 BELL AND SPIGOT WITH "O" RING JOINTS.
4. MANHOLES TO BE DESIGNED TO RESIST LATERAL AND VERTICAL SOIL FORCES RESULTING FROM MANHOLE DEPTH. ADDITIONALLY, MANHOLES LOCATED IN PAVEMENT TO BE DESIGNED FOR H20 TRAFFIC LOADING.
5. ALL MANHOLE COVERS SHALL BE BOLTED AND GASKETED WHEN RIM ELEVATION IS LOCATED BELOW FLOODPLAIN OR DRAINAGE WAY ELEVATION.
6. FRAME ADJUSTMENT HEIGHT SHALL CONSIST OF FIVE INCHES (5") MINIMUM TO EIGHTEEN INCHES (18") MAXIMUM. GRADE RINGS SHALL BE GROUTED WITH A NON-SHRINK GROUT INSIDE AND OUTSIDE. PRECAST CONCRETE OR HDPE GRADE RINGS SHALL BE USED.
7. A FLOW CHANNEL SHALL BE CONSTRUCTED INSIDE MANHOLE TO DIRECT INFLUENT INTO THE FLOW STREAM. ALL P.V.C. PIPE SHALL BE REMOVED FROM INVERT.
8. BASE SECTION SHALL BE DESIGNED FOR H20 LOADING, PLUS EARTH LOAD AT 130 PCF.
9. WHERE MANHOLES ARE LOCATED OUTSIDE OF PAVEMENT, ENSURE ADJACENT GRADES PROVIDE POSITIVE DRAINAGE DIRECTED AWAY FROM THE MANHOLE COVER.
10. MANHOLES WITH 12" PIPING OR LARGER SHALL BE COATED WITH RAVEN 405, SPRAYWALL, OR APPROVED EQUAL. COATING SHALL HAVE A UNIFORM THICKNESS OF 124 MILS AND A MINIMUM THICKNESS OF 100 MILS, APPLIED AFTER MANHOLE HAS PASSED VACUUM TEST. IN LIEU OF INTERIOR COATING, NEW PRECAST MANHOLES CONTAINING CONSHIELD WILL BE ACCEPTED PROVIDING THE MANUFACTURER STENCILS "CONSHIELD" ON THE INSIDE AND OUTSIDE OF ALL MANHOLE SECTIONS.

Scale: NTS	SONTERRA MUNICIPAL UTILITY DISTRICT JARRELL, TEXAS	
Date Issued: 10/17/22	PRECAST CONCRETE WASTEWATER MANHOLE DETAIL	STANDARD DETAIL WW-01

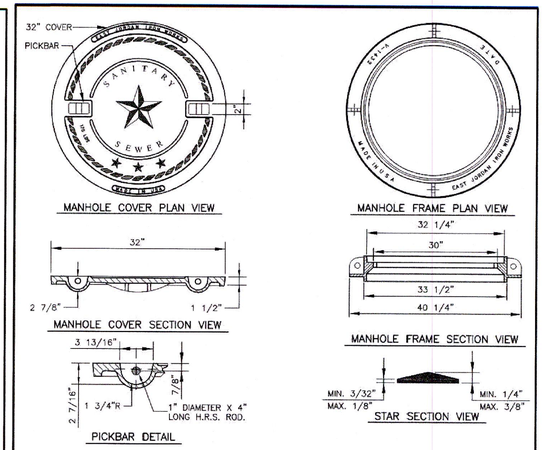

NOTES:

1. COVER AND FRAME SHALL COMPLY WITH STANDARD SPECIFICATIONS FOR DRAINAGE, SEWER, UTILITY AND RELATED CASTINGS: AASHTO DESIGNATION M306-04.
2. MANHOLE COVER AND FRAME ASSEMBLY MANUFACTURED BY EAST JORDAN IRON WORKS, INCORPORATED, OR APPROVED EQUAL.
3. ALL CORNERS AND EDGES SHALL HAVE A 1/16" MINIMUM AND 1/8" MAXIMUM RADIUS.
4. MANHOLE COVERS SHALL BE CAST WITH TWO 1" DIAMETER STEEL PICKBARS.
5. MANHOLE COVER WEIGHT SHALL BE CAST ON BOTH TOP AND BOTTOM OF COVER.
6. MANUFACTURER SHALL CERTIFY THAT EACH MANHOLE COVER MEETS HS-20 LOADING.
7. FILLETS SHALL BE 1/4" RADIUS UNLESS OTHERWISE SPECIFIED.
8. MANUFACTURER SHALL REMOVE EXCESS IRON AND MACHINE FINISH SEATING SURFACES TO NOTED DIMENSIONS.

Scale: NTS	SONTERRA MUNICIPAL UTILITY DISTRICT JARRELL, TEXAS	
Date Issued: 10/17/22	NON-BOLTED WASTEWATER MANHOLE COVER AND FRAME DETAIL	STANDARD DETAIL WW-03

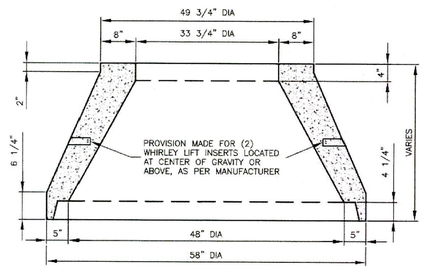

NOTE:

CONCENTRIC CONCRETE CONE SECTION SHALL BE MANUFACTURED USING 4000 TO 4500 P.S.I. CONCRETE, 28 DAY STRENGTH AND IN ACCORDANCE WITH ASTM C478, AS MANUFACTURED BY CONCRETE PRODUCTS, INCORPORATED, OR APPROVED EQUAL.

Scale: NTS	SONTERRA MUNICIPAL UTILITY DISTRICT JARRELL, TEXAS	
Date Issued: 10/17/22	PRECAST 48" CONCENTRIC CONCRETE CONE SECTION DETAIL	STANDARD DETAIL WW-04

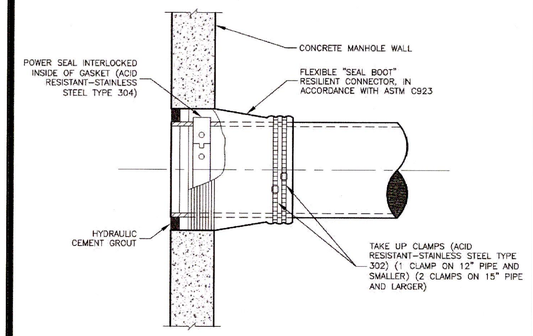

Scale: NTS	SONTERRA MUNICIPAL UTILITY DISTRICT JARRELL, TEXAS	
Date Issued: 10/17/22	FLEXIBLE "SEAL BOOT" RESILIENT CONNECTOR DETAIL	STANDARD DETAIL WW-05

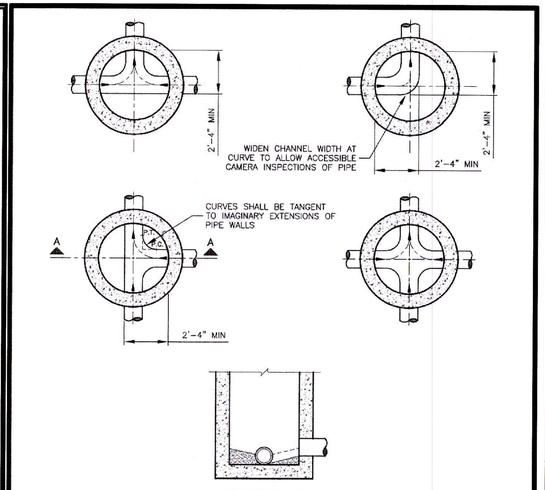

NOTES:

1. MINIMUM DROP FROM INLET TO OUTLET OF MANHOLE IS 0.1 FEET AND MAXIMUM DROP IS 2.5 FEET, UNLESS SPECIAL APPROVAL IS OBTAINED FROM THE CITY OF ROUND ROCK.
2. INVERT CHANNELS TO BE CONSTRUCTED FOR SMOOTH FLOW WITH NO OBSTRUCTIONS.
3. SPILLWAYS SHALL BE CONSTRUCTED BETWEEN PIPES WITH DIFFERENT INVERT ELEVATIONS PROVIDING FOR SMOOTH FLOW.
4. CHANNELS FOR FUTURE CONSTRUCTIONS, SHALL BE CONSTRUCTED WITH PIPE EXTENDING 3' BEYOND EXTERIOR OF MANHOLE WALL, WITH GLUED PLUG.
5. SLOPE MANHOLE BENCH AT 2:1 SLOPE FROM MANHOLE WALL TO CHANNEL.
6. INVERT CHANNEL SHALL BE A MINIMUM OF 1/2 THE DIAMETER OF THE LARGEST PIPE OR FOUR INCHES (4") DEEP.

Scale: NTS	SONTERRA MUNICIPAL UTILITY DISTRICT JARRELL, TEXAS	
Date Issued: 10/17/22	WASTEWATER FLOW PATTERNS FOR INVERT CHANNELS DETAIL	STANDARD DETAIL WW-06

NO.	REVISION	DATE

STATE OF TEXAS
JENNIFER C. FRANKLIN
118838
LICENSED PROFESSIONAL ENGINEER
9-25-24

PAPE-DAWSON ENGINEERS
AUSTIN | SAN ANTONIO | HOUSTON | FORT WORTH | DALLAS
10801 N MOPAC EXPY, BLDG 3, STE 200 | AUSTIN, TX 78759 | 512.454.8711
TBPE FIRM REGISTRATION #470 | TBPLS FIRM REGISTRATION #10028801

RANCHO DEL CIELO - PHASE 4B
WILLIAMSON COUNTY, TEXAS

WASTEWATER DETAILS 1 OF 2

CITY JOB No.
JOB NO. 51118-61
DATE SEPTEMBER 2024
DESIGNER TS
CHECKED DRAWN CE/JM
SHEET 35 OF 36

Date: Sep 24, 2024, 4:07pm User ID: tstephens
File: H:\Projects\51\18\60_Phase 5\301 Construction Documents\Civil\D751118-61.dwg

THIS DOCUMENT HAS BEEN PRODUCED FROM MATERIAL THAT WAS STORED AND/OR TRANSMITTED ELECTRONICALLY AND MAY HAVE BEEN INADVERTENTLY ALTERED. RELY ONLY ON FINAL HARDCOPY MATERIALS BEARING THE CONSULTANT'S ORIGINAL SIGNATURE AND SEAL.

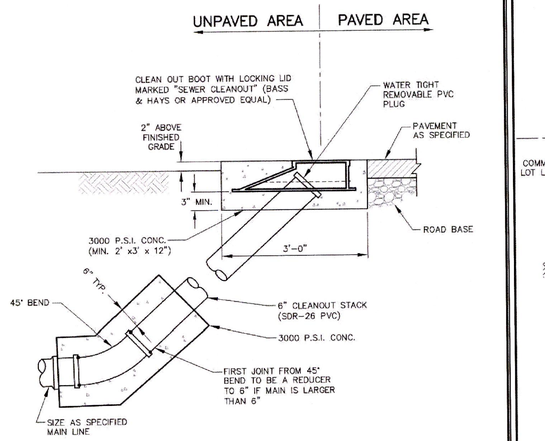

Scale: NTS Date Issued: 10/17/22	SONTERRA MUNICIPAL UTILITY DISTRICT JARRELL, TEXAS	STANDARD DETAIL WW-07
SONTERRA	END OF MAIN WASTEWATER CLEANOUT DETAIL	

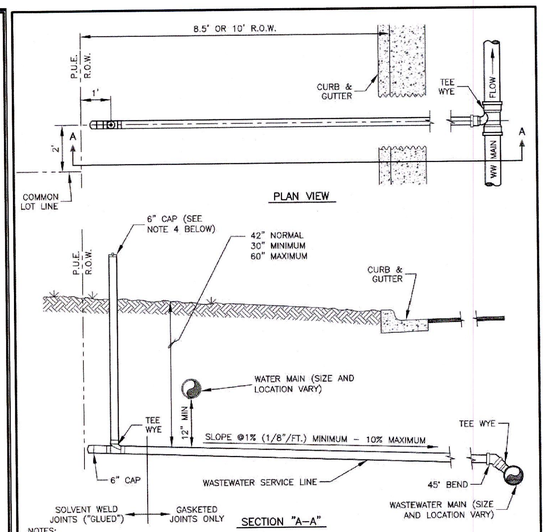

NOTES:

1. ALL PIPE TO BE SDR 26.
2. ALL FITTINGS TO BE SDR 35 WITH GASKETED JOINTS EXCEPT AS NOTED.
3. SERVICE LINES, CLEANOUTS, AND FITTINGS SHALL BE 4" DIAMETER FOR SINGLE RESIDENTIAL SERVICE AND 6" DIAMETER FOR DOUBLE RESIDENTIAL SERVICE.
4. CLEANOUT STACK TO BE INITIALLY SET BY CONTRACTOR AT 24"-36" ABOVE FINISHED GRADE WITH GLUED CAP. FINAL ADJUSTMENT TO 6" ABOVE FINISHED GRADE SHALL OCCUR BY BUILDER WITH THREADED CAP W/FEMALE ADAPTER PRIOR TO ACCEPTANCE OR ISSUANCE OF CERTIFICATE OF OCCUPANCY.

Scale: NTS Date Issued: 10/17/22	SONTERRA MUNICIPAL UTILITY DISTRICT JARRELL, TEXAS	STANDARD DETAIL WW-08
SONTERRA	WASTEWATER SERVICE DETAIL	

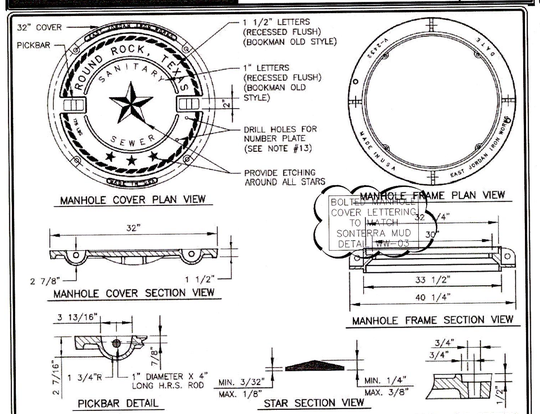

NOTES:

1. COVER AND FRAME SHALL COMPLY WITH STANDARD SPECIFICATIONS FOR DRAINAGE, SEWER, UTILITY AND RELATED CASTINGS: AASHTO DESIGNATION M306-04.
2. MANHOLE COVER SHALL BE MODEL NUMBER: V-2432-3 (PRODUCT NUMBER: 42432033), AS MANUFACTURED BY EAST JORDAN IRON WORKS INCORPORATED, OR APPROVED EQUAL.
3. MANHOLE FRAME SHALL BE MODEL NUMBER: V-2432 (PRODUCT NUMBER: 42432010), AS MANUFACTURED BY EAST JORDAN IRON WORKS INCORPORATED, OR APPROVED EQUAL.
4. MANHOLE COVER AND FRAME ASSEMBLY, IF ORDERED AS A SET, SHALL BE MODEL NUMBER: V-2432 (PRODUCT NUMBER: 42432073), AS MANUFACTURED BY EAST JORDAN IRON WORKS INCORPORATED, OR APPROVED EQUAL.
5. ALL CORNERS AND EDGES SHALL HAVE A 1/16" MINIMUM AND 1/8" MAXIMUM RADIUS.
6. MANHOLE COVERS SHALL BE CAST WITH TWO 1" DIAMETER STEEL PICKBARS.
7. MANHOLE COVER WEIGHT SHALL BE 175 LBS. FOR DUCTILE IRON. WEIGHT SHALL BE CAST ON BOTH TOP AND BOTTOM OF COVER.
8. MANUFACTURER SHALL CERTIFY THAT EACH MANHOLE COVER MEETS HS-20 LOADING.
9. FILLETS SHALL BE 1/4" RADIUS UNLESS OTHERWISE SPECIFIED.
10. MANUFACTURER SHALL REMOVE EXCESS IRON AND MACHINE FINISH SEATING SURFACES TO NOTED DIMENSIONS.
11. COVER SHALL BE DIPPED IN A WATER-BASED ASPHALTIC COATING, PRIOR TO SHIPMENT FROM FOUNDRY.
12. BOLTS SHALL BE 5/8"-11NC X 2" LONG HEX STAINLESS STEEL WITH WASHER.
13. MANUFACTURER SHALL DRILL 2-3/16" X 1/2" DEEP HOLES FOR A MANHOLE NUMBER PLATE TO BE PROVIDED BY THE CITY OF ROUND ROCK. THE TOP HOLE SHALL BE DRILLED 1" O.C. FROM THE BOTTOM OF THE PICKBAR AND THE BOTTOM HOLE SHALL BE DRILLED 4" O.C. FROM THE TOP HOLE.

RECORD SIGNED COPY ON FILE AT U&ES DEPARTMENT APPROVED 03-01-18 DATE THE ARCHITECT/ENGINEER ASSUMES RESPONSIBILITY FOR THE APPROPRIATE USE OF THIS DETAIL. (NOT TO SCALE)	CITY OF ROUND ROCK MODIFIED BOLTED WASTEWATER MANHOLE COVER AND FRAME DETAIL	DRAWING NO: WW-07 ROUND ROCK TEXAS

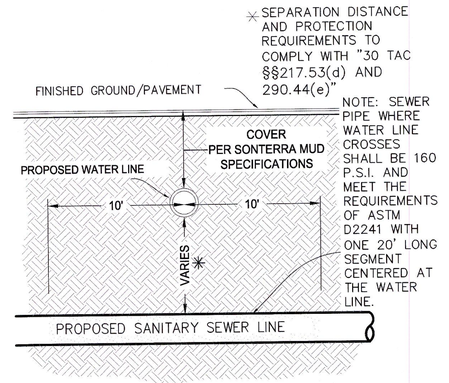

TYPICAL SANITARY SEWER/ WATER CROSSING DETAIL

NOT-TO-SCALE

NO.	REVISION	DATE

STATE OF TEXAS
JENNIFER C. FRANKLIN
118838
LICENSED PROFESSIONAL ENGINEER
9-25-24

PAPE-DAWSON ENGINEERS
AUSTIN | SAN ANTONIO | HOUSTON | FORT WORTH | DALLAS
10801 N MOPAC EXPY, BLDG 3, STE 200 | AUSTIN, TX 78759 | 512.454.8711
TBPE FIRM REGISTRATION #470 | TBPLS FIRM REGISTRATION #10028801

RANCHO DEL CIELO - PHASE 4B
WILLIAMSON COUNTY, TEXAS

WASTEWATER DETAILS 2 OF 2

CITY JOB No.
JOB NO. 51118-61
DATE SEPTEMBER 2024
DESIGNER TS
CHECKED DRAWN CE/JM
SHEET 36 OF 36

THIS DOCUMENT HAS BEEN PRODUCED FROM MATERIAL THAT WAS STORED AND/OR TRANSMITTED ELECTRONICALLY AND MAY HAVE BEEN INADVERTENTLY ALTERED. RELY ONLY ON FINAL HARDCOPY MATERIALS BEARING THE CONSULTANT'S ORIGINAL SIGNATURE AND SEAL.

Date: Sep 24, 2024, 4:07pm User ID: lstephens
File: K:\Projects\51118\600_Phase 5\301 Construction Documents\Civil\D751118-61.dwg